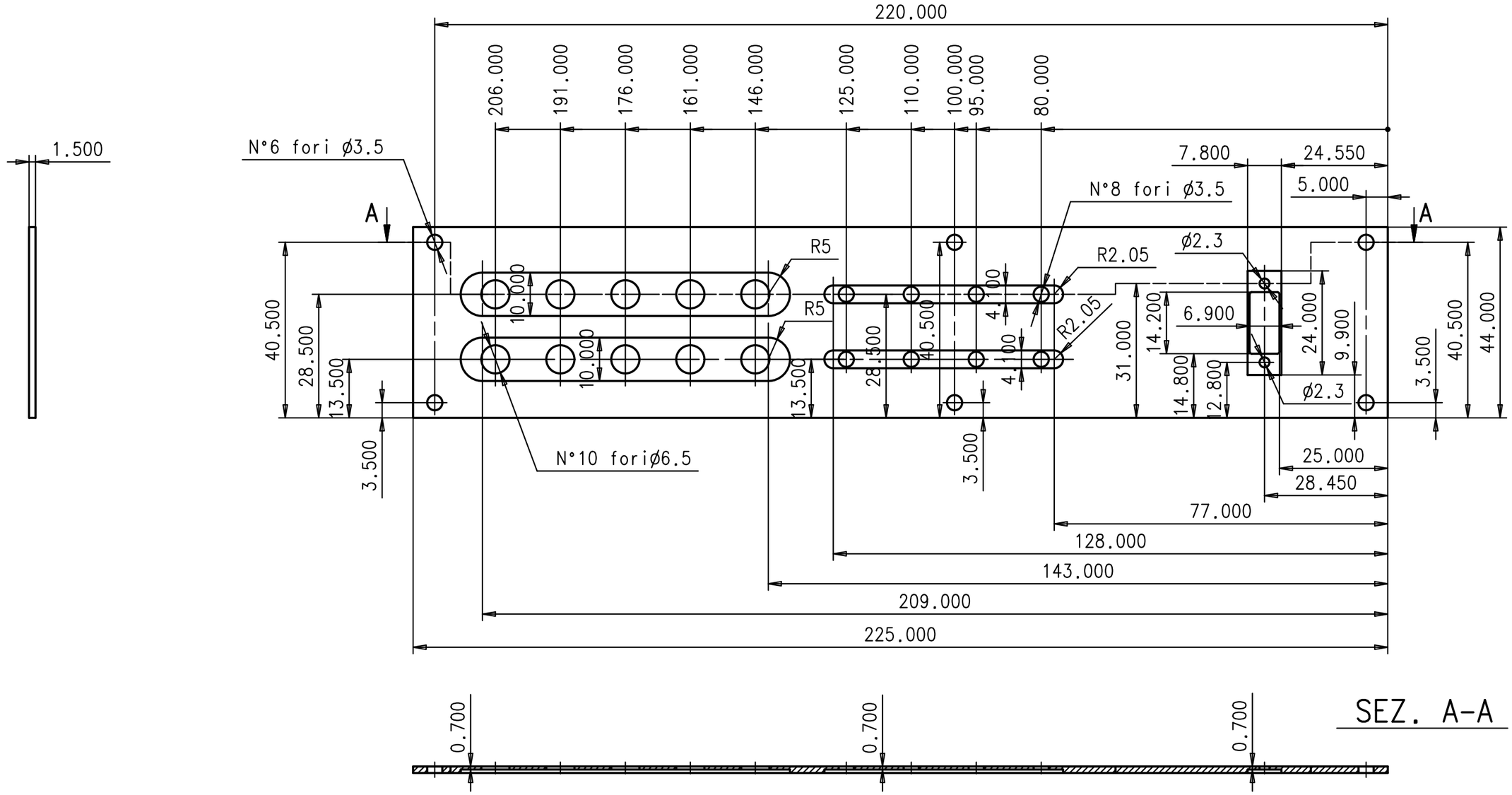

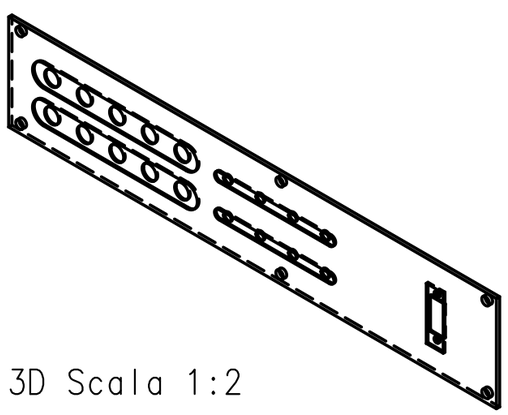

3D Scala 1:2

NOTE:

SURFACE TREATMENT: ALODINE SPEC. MIL-C-5541,
TYPE II CLASS 3, 1200 GOLD

DATE:	DRAWED:	CHECKED:	APPROVED:	QUANTITY:	REV.:
04/07	C.Guandalini		G.Laurenti	1	
MATERIAL: Al 7075 T7351 QQ-A-250/12			SCALE: 1:1	ISTITUTO NAZIONALE DI FISICA NUCLEARE	
DRAWING TITLE: Patch panel HV-S-Sfec plane 1			GEN.TOLL.: ±0.100	I.N.F.N.	
			GEN.RAD.:	Sez.di Bologna	
ASSEMBLY NAME: UPPER TOF		DRAWING NUMBER: ams TOF 00-001 UT		SIZE: A3	
PROJECT: AMS II TOF				SHEET: 1/1	