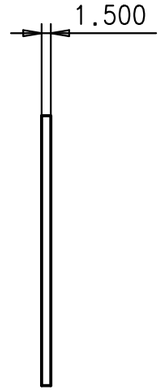

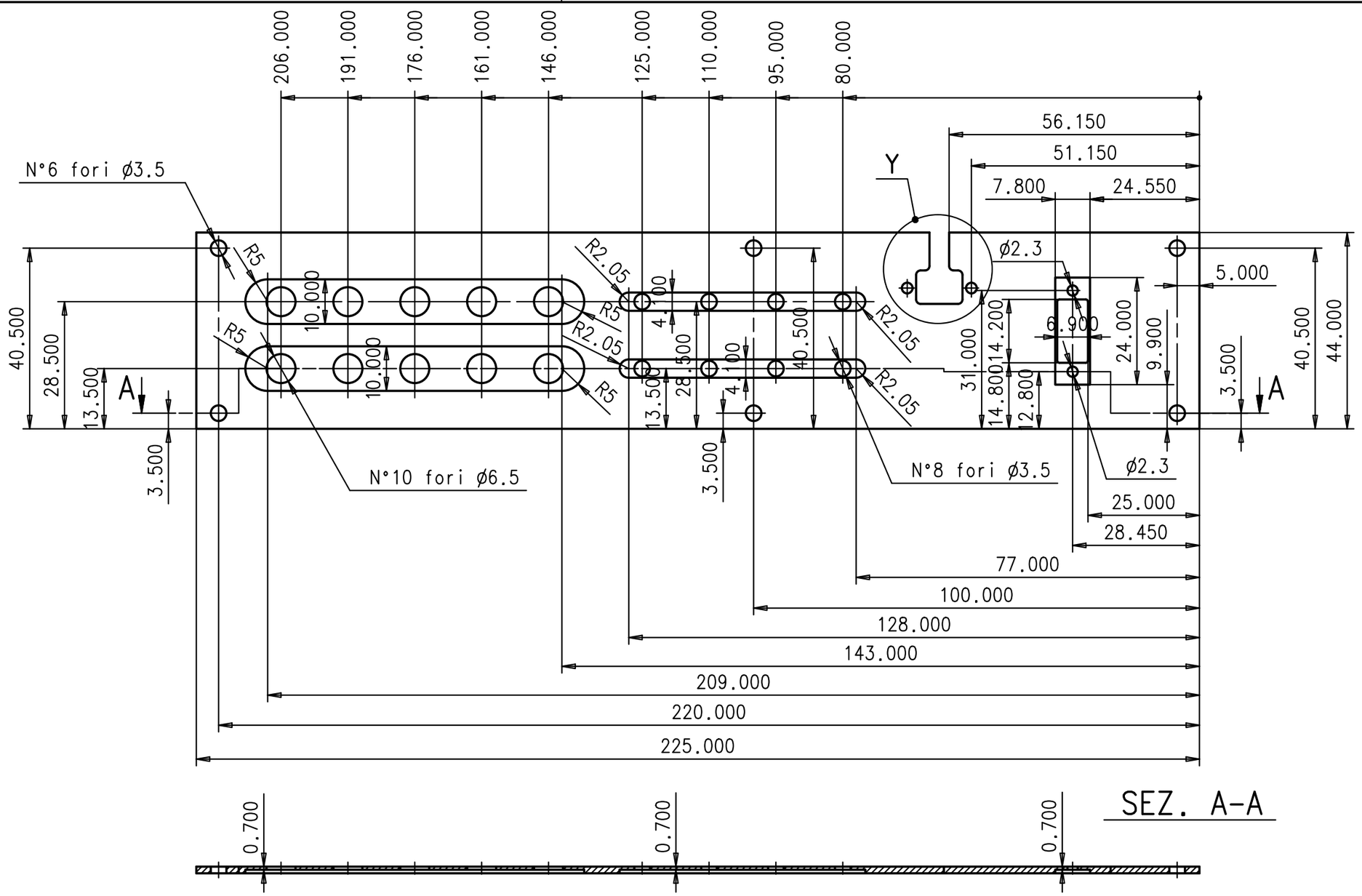

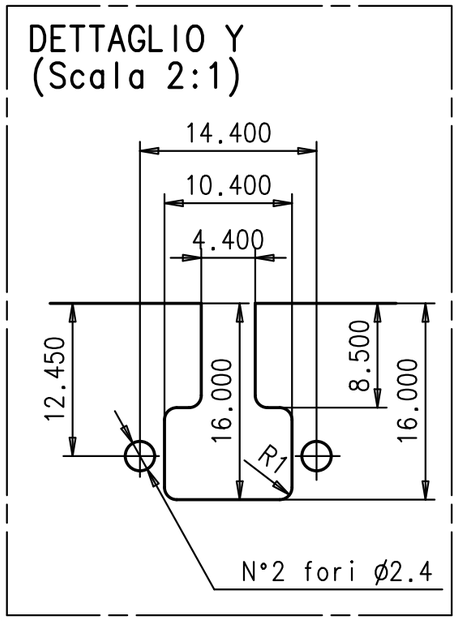

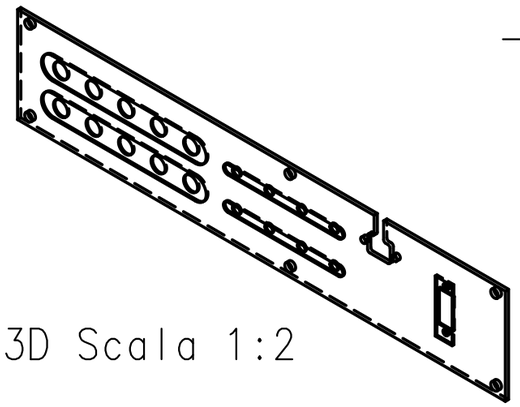

NOTE:

SURFACE TREATMENT: ALODINE SPEC. MIL-C-5541,

TYPE II CLASS 3, 1200 GOLD

DATE:	DRAWED:	CHECKED:	APPROVED:	QUANTITY:	REV.:
04/07	C.Guandalini		G.Laurenti	1	

MATERIAL: Al 7075 T7351 QQ-A-250/12

SCALE: 1:1

GEN.TOLL.: ±0.100

GEN.RAD.:

DRAWING TITLE: Patch panel HV-S-Sfec-Temp plane 1

ASSEMBLY NAME: UPPER TOF

DRAWING NUMBER: ams TOF 00-002 UT

PROJECT: AMS II TOF

ISTITUTO NAZIONALE DI FISICA NUCLEARE

I.N.F.N.

Sez.di Bologna

SIZE: A3

SHEET: 1/1