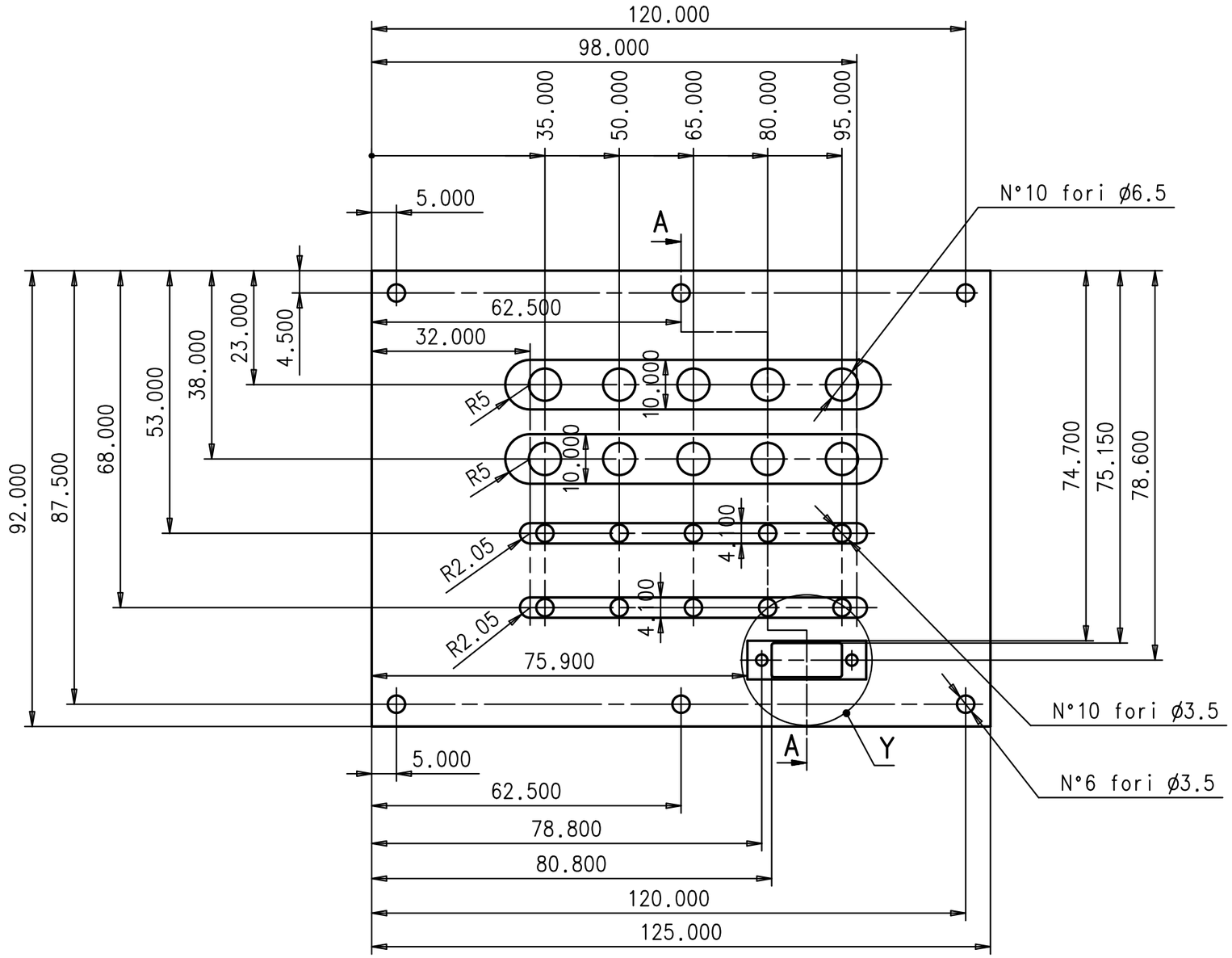


SEZ. A-A

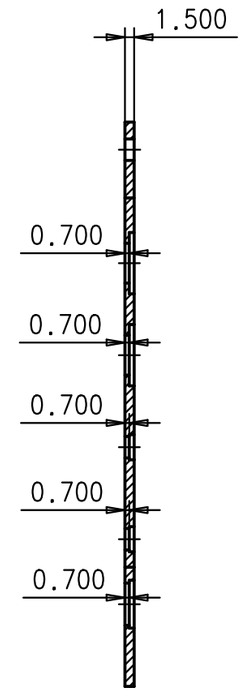


NOTE:

SURFACE TREATMENT: ALODINE SPEC. MIL-C-5541,

TYPE II CLASS 3, 1200 GOLD

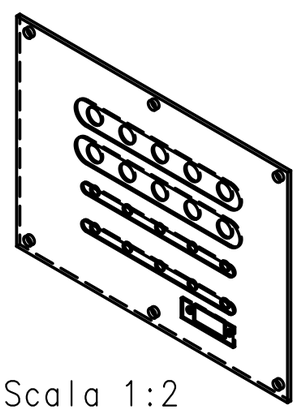

3D Scala 1:2

DETTAGLIO Y
(Scala 2:1)

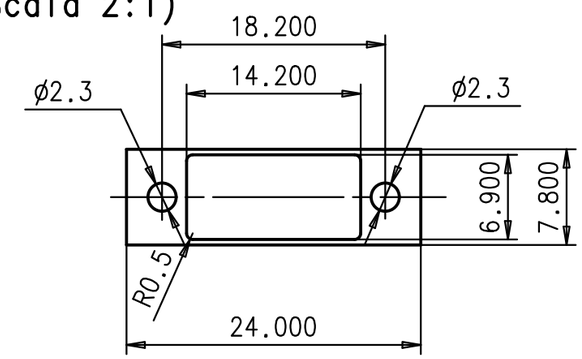


| DATE: | DRAWED: | CHECKED: | APPROVED: | QUANTITY: | REV.: |
|---|---|---|---|---|---|
| 04/07 | C.Guandalini | | G.Laurenti | 1 | |
| MATERIAL: Al 7075 T7351 QQ-A-250/12 | | | SCALE: 1:1 | ISTITUTO NAZIONALE DI FISICA NUCLEARE | |
| DRAWING TITLE: Patch panel HV-S-Sfec plane 2 | | | GEN.TOLL.: ±0.100 | I.N.F.N. | |
| | | | GEN.RAD.: | | |
| ASSEMBLY NAME: UPPER TOF | | DRAWING NUMBER: ams TOF 00-003 UT | | Sez.di Bologna | |
| | | | | SIZE: A3 | |
| PROJECT: AMS II TOF | | | | SHEET: 1/1 | |