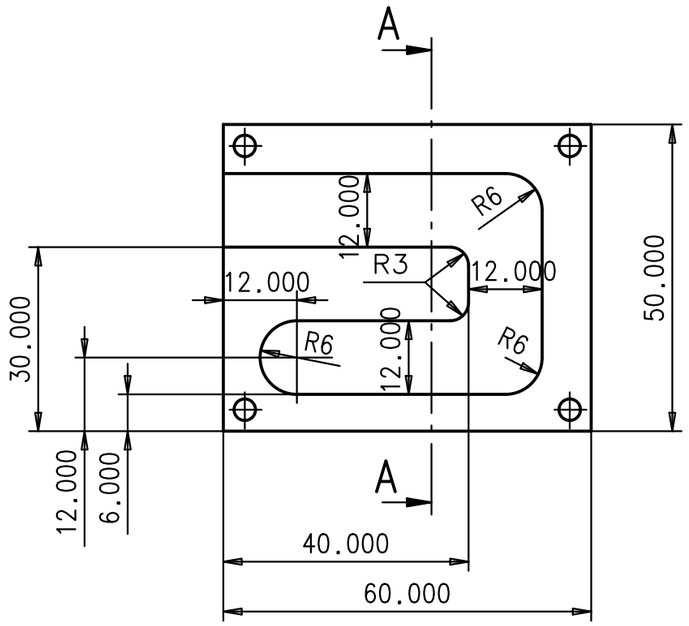

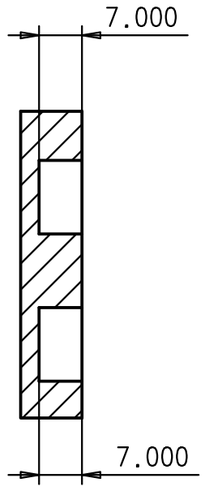

SEZ. A-A

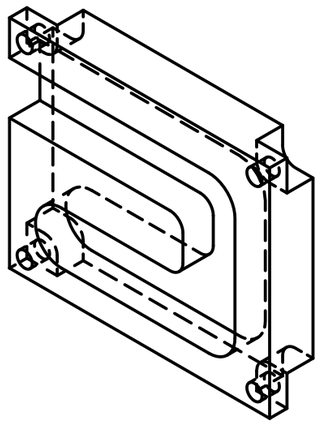

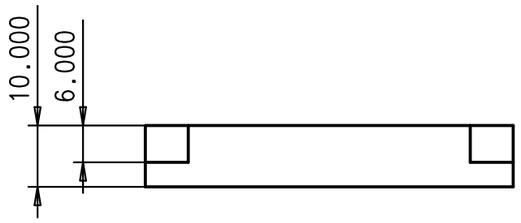

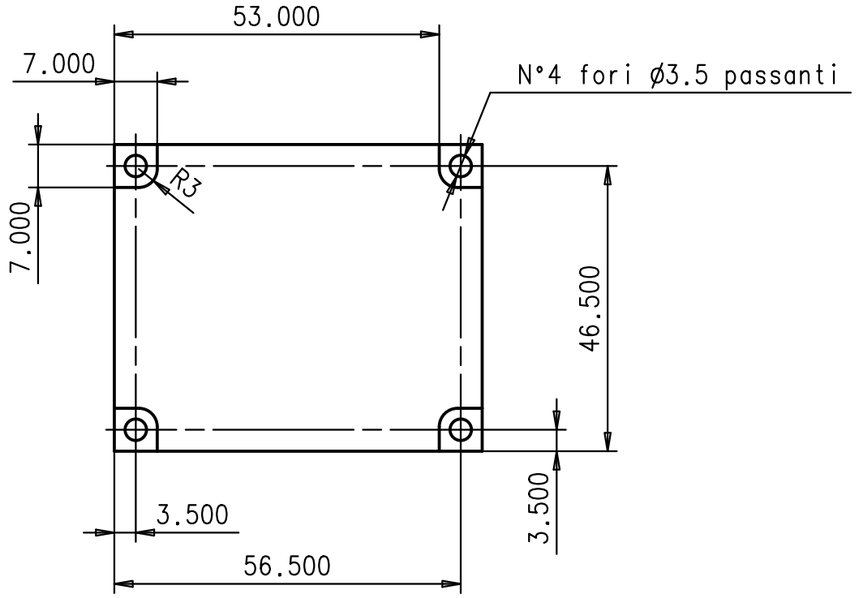

DATE:	DRAWED:	CHECKED:	APPROVED:	QUANTITY:	REV.:
10/07	C.Guandalini		G.Laurenti	10	
MATERIAL: Plexiglass nero Cern			SCALE: 1:1	ISTITUTO NAZIONALE DI FISICA NUCLEARE	
DRAWING TITLE: Trappola			GEN.TOLL.: ±0.10	I.N.F.N.	
			GEN.RAD.:		
ASSEMBLY NAME: LOWER TOF - UPPER TOF		DRAWING NUMBER: ams TOF 00-005 UT		Sez.di Bologna	
				SIZE: A3	
PROJECT: AMS II				SHEET: 1/1	