JSC-28792, Rev. D

Alpha Magnetic Spectrometer - 02
Structural Verification Plan
for the
Space Transportation System
and the
International Space Station

Engineering Directorate

January, 2005 – Revision D

National Aeronautics and
Space Administration

Lyndon B. Johnson Space Center
Houston, Texas

JSC-28792, Rev. D

Alpha Magnetic Spectrometer - 02 Structural Verification Plan for the Space Transportation System and the International Space Station

Technical Work Plan # MHECSMBSX
Contract NAS 9-19100

Prepared by

Lockheed Martin Space Operations
Houston, Texas

Prepared for

Engineering Directorate
Johnson Space Center
National Aeronautics and Space Administration
Houston, Texas

LMSEAT 34222

Alpha Magnetic Spectrometer - 02
Structural Verification Plan
for the
Space Transportation System
and the
International Space Station

Originally Prepared by

Signed by Trent Martin

Trent Martin
AMS-02 Structural Analysis Lead Engineer

Revision D Prepared by

Signed by Chris Tutt

Chris Tutt
AMS-02 Chief Systems Engineer

Lockheed Martin Space Operations Approval by

Signed by Paul Nemeth

Paul Nemeth
AMS-02 Project Manager

LMSEAT 34222

Alpha Magnetic Spectrometer - 02
Structural Verification Plan
for the
Space Transportation System
and the
International Space Station

Engineering Directorate

Signed by Stephen Porter

Stephen Porter
AMS-02 Project Manager
Engineering Directorate
Johnson Space Center
National Aeronautics and Space Administration

LMSEAT 34222

Preface

This plan defines the structural verification requirements for the Alpha Magnetic Spectrometer – 02 (AMS-02) payload, currently designated for Space Transportation System Flight Number 127 (STS-127) – International Space Station (ISS) Utilization Flight – 4.1 (UF-4.1). The types of testing to be performed for the system to verify the dynamic and static math model are specified and the approach for strength assessment is presented. Organizational responsibilities for structural analysis tasks are defined. A list of deliverables, which are required to complete these tasks, is also presented.

Written concurrence/approval is expected, as was done for Revision A and B [45], from the NASA ES Structures Working Group and the NASA OB ISS Structures Team.

Change Log

Listed below is the current revision level for this document.

Revision Level	Description	Revision Date
Basic	— Original Issue	October 26, 1999
Revision A	— Added ECAL testing — Added VC certification & additional strap testing — Added pressure system mechanical fitting certification — Added automatic weld certification — Modifications to reflect RIDs from PDR	August 24, 2000
Revision B	— Updated strap testing & verification — Changed mechanical random vibration test to more conservative acoustic random vibration test — Updated Experiment Component verifications to clarify and add detail — Add certification for friction stir welding of USS-02 tubes — Updated VC verification approach to reflect agreements with the SWG & PSRP — Clarify loads application approach for dewar System — Added Pressure System Tables — Added Micro-gravity Loads Requirement	December 5, 2001
Revision C	— Changed NSTS 37329 Rev A to NSTS 37329 Rev B in References — Changed Outer Cylinder Material to 7050-T7541 in section 3 — Added additional figure 2 — Updated figures 5-7 for current finite element model — Changed Table 4-2 to match SSP 57003, Rev A, Table 3.1.1.2.3-2 — Added on-orbit accelerations to section 4.2 — Removed references to SRD component — Added close clearance issue wording to section 5 — Added reference to LMSEAT 33818 rev A in section 8.2 — Reworded section 8 to clarify used of simplified fatigue spectrum for testing of straps	July 10, 2003

Revision Level	Description	Revision Date
Revision C (continued)	— Revised tables 8.1, 8.2 and 8.3 for updated fatigue spectrums	July 10, 2003
	— Added section 10.1 for back-out prevention of mechanical fittings	
	— Revised section 13.1	
	— Revised section 14.1	
	— Revised section 15 to clarify that vibration testing is only necessary for mission success	
	— Revised section 16.1.1 for different load applications during Launch and Landing configurations.	
	— Added section 17.1.1.4 for Friction Stir welded tubes	
	— Changed BOSAR to BOSOR in section 17.1.2	
	— Revised section 17.1.4	
	— Deleted section 17.2.2	
	— Changed static testing to sine burst testing in section 17.2.7	
	— Updated section 17.2.7 based upon testing done in January 2003	
	— Changed Table 18.1 to updated dates for deliverables	
	— Updated Tables A1, A2, Appendix A, for AMS-02 Factors of Safety	
	— Updated Appendix D for experiments	
	— Changed "..pending LMSO review.." to " pending SWG review" in Appendix D referring to modal frequency confirmation	
	— Updated 17.2.12 for latest revision of SSP-57003 and PAS testing plans	
	— Updated section 4.5 for Acoustic Loads	
	— Updated Appendix B for load factors to match Appendix D	
	— Changed Table numbering	
	— Changed Figure numbering	
Revision D	Changed references to Space and Life Sciences Directorate to Engineering Directorate	January 20, 2005
	Changed contractor references from Lockheed Martin Space Operations to Jacobs Sverdrup when describing future work and responsibilities	
	Removed references to Friction Stir Welding and added words describing the new USS beam extrusions.	
	Updated sections 5.0 and 17.0 to reflect second design coupled loads cycle results.	
	Removed references to the ROFU, SRD, and LEPS, which have been removed from the experiment.	
	Corrected factor of safety tables in Appendix A to match NASA requirements	

Revision Level	Description	Revision Date
	requirements. Updated model assembly sequence in Section 17 to reflect latest hardware assembly sequence. Clarified frequency verification procedure in Section 13 Updated on-orbit loads discussion to reflect current analysis plan. Incorporated all comments received during Critical Design Review and rebaselining review.	

Contents

Section **Page**

Contents v
Figures viii
Tables x
1. Purpose 1
2. Overview 2
3. Description of Structures 8
Design Limit Load Factors 15
4.1 Primary Structure and Large Secondary Structures 15
4.2 On orbit Loads 16
4.3 Emergency Landing 17
4.4 Experiments, Secondary Structure 17
4.5 Acoustic Loads 17
4.6 EVA/EVR Loads 18
4.6.1 EVA Loads 18
4.6.2 EVR Loads 18
4.6.3 SRMS/SSRMS and Grapple Fixtures 18
4.7 Eddy Current Induced Loads 19
4.8 Micro-gravity Loads 20
4.9 Ground and Air Transportation Loads 20
5. Design Coupled Loads Analysis 23
6. Design Factors of Safety 25
6.1 Flight Equipment 25
6.2 Ground Handling Equipment 25
7. Margins of Safety 26
7.1 Simple Loads 26
7.2 Combined Loads 26
8. Fracture & Fatigue 27
8.1 Fracture Control 27
8.2 Fatigue 27
9. Preloaded Bolts 35
10. Fastener Integrity 36
10.1 Mechanical Fittings 36
11. Interface Loads 37
12. Materials and Welds 38
12.1 Material Properties 38
12.2 Temperature Effects 38
12.3 Stress Corrosion Cracking 38
12.4 Welding 38
12.5 Welder Qualification 39
13. Frequency Verification 41
13.1 Primary Structure 41
13.2 Secondary Structure 44
14. Strength Verification 45

14.1 Primary Structure 45
14.2 Composite Structures 46
14.3 Glass Structures 46
14.4 Pressure & Vacuum Systems 46
14.4.1 Pressure System Mechanical Fitting Certification Requirements 46
14.4.2 Vacuum Seal Certification Requirements 47
14.5 Secondary Structure 50
15. Environmental Testing 51
16. Loads Analysis 53
16.1 Primary Structure 53
16.1.1 Non-Linear Static Load Factor Analysis-Launch Configuration 53
16.1.2 Non-Linear Static Load Factor Analysis-Landing Configuration 53
16.1.3 Pretest Static Test Analysis 54
16.1.4 Non-Linear Modal Analysis 54
16.1.5 Pretest Analysis For Sine Sweep and Vibration Tests 54
16.1.6 Pretest Analysis for the AMS Modal Test 54
16.2 Secondary Structure 55
16.3 ISS On-Orbit 55
17. Payload Components 56
17.1 Primary Structures 56
17.1.1 Unique Support Structure - 02 56
17.1.1.1 Trunnion Misalignment 56
17.1.1.2 Trunnion Friction 57
17.1.1.3 Equipment Required for STS Removal and Retrieval 57
17.1.2 Cryogenic Magnet Vacuum Case 58
17.1.3 Superconducting Cryogenic Magnet 59
17.1.4 Cryogenic Magnet Support System 60
17.2 Secondary Structures 63
17.2.1 Cryogenic Magnet Helium Tank 63
17.2.2 Transition Radiation Detector and Gas Re-supply System (TRD) 64
17.2.3 Time of Flight System (TOF) 66
17.2.4 Tracker 67
17.2.5 Ring Imaging Cherenkov Counter (RICH) 67
17.2.6 Electromagnetic Calorimeter 68
17.2.7 Anti-Coincidence Counter 69
17.2.8 Thermal Control System 69
17.2.9 Meteoroid and Orbital Debris Shielding 69
17.2.10 Payload Attach System and ISS Interface Hardware 70
17.2.10.1 PAS Frequency Verification 70
17.2.10. 2 PAS Strength and Stiffness Verification 70
18. Deliverables 72
Appendix A: AMS-02 Factors of Safety 1
Appendix B: AMS-02 Component Liftoff/Landing Load Factors 1
Appendix C: Safety Assessments Related to Helium Venting 1
Appendix D: Experiment Component Summary Structural Verification Plans 1
Transition Radiation Detector 2
Transition Radiation Detector Gas Supply System 4
Time of Flight 6

Tracker 8
Anti-Coincidence Counter 9
Ring Imaging Cherenkov Counter.....10
Electromagnetic Calorimeter 12
Thermal Control System 14
Tracker Thermal Control System 16
Electronic Boxes 18
Appendix E: Pressure System Summary Tables.....1

Figures

Figure **Page**

2-1 Alpha Magnetic Spectrometer – STS-91 Configuration Launch, Landing, and On-Orbit 4

2-2 Alpha Magnetic Spectrometer – 02 Configuration Launch, Landing, and On-Orbit 5

2-3 Alpha Magnetic Spectrometer – 02 Configuration Launch, Landing, and On-Orbit 6

2-4 Alpha Magnetic Spectrometer – 02 Configuration Launch, Landing, and On-Orbit 7

2-5 Alpha Magnetic Spectrometer – 02 Configuration Close up of Payload Attach System 8

3-1 Alpha Magnetic Spectrometer – 02 Cryogenic Magnet Cross Section 11

3-2 Alpha Magnetic Spectrometer - 02 Experiment Configuration 12

3-3 Alpha Magnetic Spectrometer – 02 NASTRAN Finite Element Model 13

3-4 AMS – 02 Magnet and Superfluid Helium Tank FEM 14

3-5 AMS – 02 Superfluid Helium Tank FEM 14

3-6 AMS – 02 Magnet FEM 15

3-7 AMS – 02 Example of USS-02 Joint Detailed FEM 15

4-1 Alpha Magnetic Spectrometer - 02 Primary Support Stand Without Lower USS 22

4-2 Alpha Magnetic Spectrometer - 02 Primary Support Stand With Lower USS (Raised) 23

13-1 STA VC in VCTF 44

13-2 STA Sine Sweep Test, XY Configuration 44

13-3 Entire Payload Modal and Static Test Configuration 46

17-1 PAS Stiffness Test Setup 75

C-1 AMS-02 Cryomagnet Helium Credible Emergency Venting Scenarios..... C-3

Tables

Table		Page
4-1	Liftoff and Landing Design Limit Load Factors	17
4-2	ISS On-Orbit Primary Structure Design Limit Loads	17
4-3	Emergency Landing Ultimate Load Factors	18
4-4	Launch/Landing Design Limit Load Factors for Small Secondary Structures	18
4-5	Acoustic Load Factors	19
4-6	Interface Loads for the SSRM attaching to the PVGF	20
4-7	Transportation Load Factors and Factors of Safety	21
5-1	First DCLA Liftoff and Landing DCLA Load Factors	24
5-2	Second DCLA Liftoff and Landing Load Factors	24
5-3	Clearances between Orbiter and AMS-02 hardware	25
8-1	AMS-02 Fatigue Spectrum	30-31
8-2	AMS-02 Strap System Fatigue Spectrum	32-33
8-3	AMS-02 Strap System Test Fatigue Spectrum	34
8-4	Maximum and Minimum Strap Loads Used in Fatigue Testing	34
8-5	Maximum and Minimum Strap Loads	35
15-1	Maximum Expected Flight Levels for the AMS-02	54
15-2	Minimum Workmanship Levels for the AMS-02	54
17-1	Strap Testing & Environmental Loads Matrix	66
18-1	List of Deliverable Items	76
A1	USS-02, Cryomagnet, and Pressure Systems Factors of Safety	A-1
A2	AMS-02 Secondary Structures Factors of Safety	A-7
B1	AMS-02 Component Liftoff/Landing Load Factors	B-1
E1	TRD Gas Supply System Pressure System Summary Table	E-1

E2 TCS Pressure System Summary Table E-2

E3 Cryomagnet Pressure System Summary Table E-3

References

1. Boeing, Canoga Park, California. *ISS Plasma Contactor Unit (PCU) Xenon Tank Damping and Fluid-Structure Interaction* (EID-02322-1), PCU Critical Design Review (CDR) Package, May 23, 1997.
2. Boeing, Canoga Park, California. *Fracture and Stress Analysis Report of Sphere, Xenon Storage, Filament Wound* (EID-02325), PCU CDR Package, April 16, 1997.
3. Boeing, Downey, California. *Space Shuttle Structural Math Model and Forcing Function Delivery* (TM 270-400-99-081), August 30, 1999.
4. Department of Defense. *Military Handbook: Metallic Materials and Elements for Aerospace Vehicle Structures* (MIL-HDBK-5H), December 1998, (Chapters 1-9 and Appendices A-E).
5. Lockheed Engineering and Sciences Company (LESC), Houston, Texas. *Mass Acceleration Curves for Trunnion Mounted Payload Components* (SMD-93-0287), May 7, 1993.
6. Lockheed Martin Space Missions Systems & Services (LMSMSS), Houston, Texas. *Report of Flight Accelerations Recorded by the WBSAAMD on STS-91* (HDID-SAS-98-0247), July 23, 1998.
7. National Aeronautics and Space Administration (NASA), Washington, D. C. *Fracture Control Requirements for Payloads Using the Space Shuttle* (NASA-STD-5003), October 1996.
8. NASA, Houston, Texas. *Alpha Magnetic Spectrometer Structural Verification Plan for the STS Flight #91 Precursor Flight Rev. A* (JSC-27378), August, 1997.
9. NASA, International Space Station (ISS), Houston, Texas. *Attached Payload Interface Requirements Document* (SSP-57003), September 1999.
10. NASA, ISS, Houston, Texas. *Attached Payload Interface Control Document* (SSP-57004), September 1999.
11. NASA, Lyndon B. Johnson Space Center, Houston, Texas. *Simplified Design Options for STS Payloads* (JSC-20545A), April 1988.
12. NASA, JSC, Houston, Texas. *Criteria for Preloaded Bolts* (NSTS 08307A), July 1998, (Change No. 3).
13. NASA, JSC, Houston, Texas. *Payload Safety Review and Data Submittal Requirements for Payload Using the Space Shuttle/ISS* (NSTS 13830, Rev. C), July 1998 (Change No. 1, Feb., 1999).
14. NASA, JSC, Houston, Texas. *Safety Policy and Requirements for Payloads Using the Space Transportation System* (NSTS 1700.7B), January 1989 (Change Package No. 15, April, 2003). ***OR*** NASA, JSC, Houston, Texas. *Safety Policy and Requirements for Payloads Using the International Space Station* (NSTS 1700.7B, ISS Addendum), December 1995 (Change Package No. 5, January, 2003).
15. NASA, JSC, Houston, Texas. *International Space Station Interface Definition Document, Rev. A* (NSTS-21000-IDD-ISS), February 18, 1998.

16. NASA, JSC, Houston, Texas. *JSC Fastener Integrity Testing Program* (JSC-23642C), June 1992.

17. NASA, JSC, Houston, Texas. *Fracture Control Plan for JSC Flight Hardware* (JSC-25863, Rev. A), August 1998.

18. NASA, JSC, Houston, Texas. *Space Shuttle Ground Support Equipment General Design Requirements* (SW-E-0002E-Book 2, Rev. E), February 1992 (Change No. 63, August, 1995).

19. NASA, JSC, Houston, Texas. *Payload Verification Requirements* (NSTS 14046E), March, 2000 (Change No. 3, August, 2003).

20. NASA, JSC, Houston, Texas. *Fracture Control Requirements for Space Station* (SSP-30558C), August, 2001.

21. NASA, LMSO, Houston, Texas. *Requests for Shuttle Math Models and Forcing Functions* (E-mail Request), August 5, 1999.

22. NASA Kennedy Space Center, Florida. *Space Transportation System Payload Ground Safety Handbook* (KHB 1700.7C), August 1999.

23. NASA Marshall Space Flight Center (MSFC), Huntsville, Alabama. *Guidelines for the Selection of Metallic Materials for Corrosion Cracking* Resistance in Sodium Chloride Environments (MSFC-STD-3029), May, 2000.

24. NASA Office of Safety and Mission Quality, Washington, D. C., *Safety Standard for Lifting Devices and Equipment* (NSS/GO-1740.9B), November 1991.

25. NASA/Canadian Space Agency (CSA), Houston, Texas. *Mobile Servicing System to User (generic) Interface Control Document, Part 1,* Rev. D (SSP-42004), May 1, 1996.

26. NASA Johnson Space Center, Houston, Texas. *Alpha Magnetic Spectrometer – Second Mission (ES2-99-027)*, August 11, 1999.

27. Journal of Applied Mechanics, *Experimental and Theoretical Studies of Liquid Sloshing at Simulated Low Gravity*, Dodge, F.T. and Garza, L.R., September, 1967.

28. Boeing, Downey, CA. SD 74-SH-0002B

29. NASA, JSC, Houston, Texas. *Structural Design and Verification Requirements for the ISS*, Rev. C (SSP-30559), September, 2000.

30. NASA, JSC, Houston, Texas. *Structural Integration Analyses Responsibility Definition for Space Shuttle Vehicle and Cargo Element Developers* (NSTS 37329 Rev. B), January 2001.

31. NASA, JSC, Houston, Texas. *Interpretations of NSTS/ISS Payload Safety Requirements* (NSTS/ISS 18798B), September 1997 (Change Package No. 3, Dec. 10, 1998).

32. NASA, JSC, Houston, Texas. *Process Specification for the Manual Arc Welding of Aluminum Alloy Flight Hardware*, Rev. B (PRC-0001), July 1999.

33. NASA, JSC, Houston, Texas. *Process Specification for the Qualification of Manual Arc Welders*, Rev. A (PRC-0008), July 1999.

34. Oxford Instruments Ltd, Eynsham, England. *Practical Cryogenics*, 1996.

35. NASA, JSC, Houston, Texas. *AMS-02 to ISS Hardware ICD* (SSP-57213), Not Yet Released.

36. LMSO, Houston, Texas. *Helium Slosh Loads for the Alpha Magnetic Spectrometer Helium Tank,* MSAD-00-0062, November 19, 1999.

37. MSFC, Huntsville, Alabama. *Torque Limits for Standard Threaded Fasteners,* MSFC-STD-486B, November 1992.

38. MSFC, Huntsville, Alabama. *Welding Aluminum Alloys*, MSFC-STEC-504C, November 20, 1990.

39. Space Cryomagnetics Limited, *Test Procedure for Small Scale Loss of Vacuum Demonstration*, S. Harrison, Jan. 2001.

40. Space Cryomagnetics Limited, *Final Report on Small Scale Loss of Vacuum Demonstration*, S. Harrison, TBD.

41. Lockheed Martin, *Creep in Cryomagnet Composite Straps for Alpha Magnetic Spectrometer (AMS)*, AMS-02-01-1, T.D. Martin, July 17, 2001.

42. Crompton Technology Group, *Preliminary Report of The Development and Production of Cryogenic Suspension Systems for ETH Space Magnet*, Davidson, et al., October 22, 2001.

43. ARDE, Inc., Qualification by Similarity Report of Sphere, Xenon Storage Filament Wound PN D4815 to PN D4636 for TRD Gas Supply System, EG 10330, A. Escalona, July 6, 2001

44. ARDE, Inc., Qualification by Similarity Report of Sphere, CO2 Storage Filament Wound PN D4816 to PN D4683 for TRD Gas Supply System, EG 10331, A. Escalona, July 6, 2001

45. NASA-JSC, *Memo approving JSC-28792 Rev. A*, ES2-01-40, V. Fogt, October 10, 2001

Acronyms

ACC	Anti-Coincidence Counter
AMS	Alpha Magnetic Spectrometer
AMS-02	Alpha Magnetic Spectrometer – 02 (ISS Mission)
BOSOR	Buckling of Shells of Revolution
CAB	Cryomagnet Avionics Box
CDR	Critical Design Review
CERN	Centre Européen de Recherche Nucléaire
CG	Center of Gravity
CMR	Cold-Mass Replica
DCLA	Design Cycle Coupled Loads Analysis
DP	Design Pressure
ECAL	Electromagnetic Calorimeter
EMC	Electro-magnetic Compatibility
EMI	Electro-magnetic Interference
ETH	Eidgenossische Technische Hochschule (Zurich)
EVA	Extravehicular Activity
EVR	Extravehicular Robotics
FRGF	Flight Releasable Grapple Fixture
FS	factor of safety
g	gravity
GMAW	Gas Metal Arc Welding
GTAW	Gas Tungsten Arc Welding
ICD	Interface Control Document
IHEP	Institute of High Energy Physics
INFN	Instituto Nazionale di Fisica Nucleare (Italy)
ISS	International Space Station
JS	Jacobs Sverdrup
JSC	Johnson Space Center
KSC	Kennedy Space Center
LESC	Lockheed Engineering and Sciences Company (Now LMSO)
LM	Lockheed Martin
LMATC	Lockheed Martin Advanced Technology Center
LMMSS	Lockheed Martin Michoud Space Systems
LMSO	Lockheed Martin Space Operations
MDP	Maximum Design Pressure
MEFL	Maximum Expected Flight Level
MIT	Massachusetts Institute of Technology
MMOD	Micro-Meteoroid and Orbital Debris
MS	Margin of Safety
MSFC	Marshall Space Flight Center
MWL	Minimum Workmanship Level
n/a	not applicable
NASTRAN	National Aeronautics and Space Administration Structural Analysis Computer Program
NBL	Neutral Buoyancy Laboratory

NSTS	National Space Transportation System
PAS	Payload Attach System
PAW	Plasma Arc Welding
PCU	Plasma Contactor Unit
PDR	Preliminary Design Review
PEDS	Passive Electrical Disconnect System
PVGF	Power Video Grapple Fixture
RICH	Ring Imaging Cherenkov Counter
ROEU	Remotely Operated Electrical Umbilical
SED	Structural Engineering Division
SFHe	Superfluid Helium
SHOOT	Superfluid Helium On-Orbit Transfer
SRMS	Shuttle Remote Manipulator System
SSP	Space Station Program
SSRMS	Space Station Remote Manipulator System
STA	Structural Test Article
STE	Special Test Equipment
STS	Space Transportation System
SWG	Structures Working Group
TBD	To Be Determined
TCS	Thermal Control System
TOF	Time of Flight
TRD	Transition Radiation Detector
UF	Uncertainty Factor
UF-4.1	Space Station Utilization Flight #4.1
UMA	Umbilical Mechanism Assembly
USS	Unique Support Structure
USS-02	Unique Support Structure – 02
VC	Vacuum Case
VLA	Verification Loads Analysis

1. Purpose

The purpose of this plan is to present the structural design, analysis, and verification methods for the Alpha Magnetic Spectrometer - 02 (AMS-02) currently scheduled for STS-127, identified as the International Space Station (ISS) Utilization Flight – 4.1 (UF-4.1). This plan shall be used to fulfill Space Shuttle Program strength and frequency requirements found in NSTS 14046E [19], NSTS-37329B [30] and NSTS 1700.7B ISS Addendum [14]. This plan is being submitted to the NSTS Structures Working Group (SWG) for formal approval. This plan will also be used to support the structural verification requirements found in SSP-57003 [9]. SSP-57003 details the on-orbit requirements for attached payloads on the ISS. This plan is also being submitted to the ISS OB Structures Team for formal approval.

This plan contains descriptions of math model requirements, load factors for design and analysis of structural components, design factors of safety, thermal considerations, verification approach, and a list of deliverables. This document is arranged so that all of the general structural verification requirements (load factors, factors of safety, testing, etc.) are detailed first. If any of the experiment components (USS-02, magnet, tracker, TRD, etc.) require special consideration, the details are listed in a separate section. All components will follow the general guidelines unless specifically addressed in the component sections.

This document is being delivered to three primary sources: 1) NASA NSTS Structures Working Group, 2) NASA OB ISS Structures Team, 3) AMS-02 experiment team. The AMS-02 experiment team has the least amount of experience dealing with NASA requirements, so the arrangement of this document has been designed to ensure that each experiment sub-component team can easily find and use their specific structural verification requirements.

2. Overview

The NASA mission management for the AMS-02 comes from the Office of the Director (code EA1) of the Engineering Directorate at JSC. Jacobs Sverdrup (JS) is contracted by NASA to provide integration of the AMS-02 payload to the Space Shuttle and the ISS. JS shall be responsible for designing, analyzing, and fabricating the Unique Support Structure-02 (USS-02) with an integral cryogenic magnet Vacuum Case for the AMS-02. Additionally, NASA and JS shall share certain responsibilities: mentoring the experiment provider; conducting independent review; and, if necessary, JS will perform the verification analyses of all of the payload's safety-critical items.

There are two (2) missions planned for AMS: the first flight, identified as the Precursor Flight, flew on STS-91 in June 1998; the second flight, which will install the AMS experiment on the International Space Station (ISS), is scheduled for ISS Utilization Flight – 4.1 (UF-4.1), or STS-127. The AMS-02 will remain on ISS for at least three years. AMS-02 is the follow-on flight for the AMS payload that was flown on STS-91 in June 1998. Because the STS-91 AMS flight was extremely successful, the experiment team has decided to incorporate a much stronger magnet as well as several new detectors. This will mean that most of the components of the AMS payload that were flown on STS-91 will not be re-flown on AMS-02. The most substantial changes are a new cryogenic superconducting magnet, cooled by superfluid helium, and a completely redesigned USS to support the experiment on the Shuttle. As each system is described in this document, specific mention is made of items that will be re-flown. If not specifically mentioned, items are being flown for the first time.

Figure 2-1 shows the liftoff and landing configurations of the AMS for the Precursor Flight (STS-91). The Structural Verification Plan for the STS-91 configuration was reported in JSC-27378A [8]. Many changes will be made to the experiment and to the carrier for STS-127. These changes are shown in Figure 2-2 through 2-5. Most of the same structural verification techniques that were implemented and accepted in JSC-27378A will be reused in this version.

While detailing scientific goals is beyond the scope of this document, a summary is in order. The science objectives of the AMS-02 experiment are to conduct astrophysical research and to search for dark matter and antimatter. To acquire this scientific data, the AMS-02 will employ a very large cryogenic superfluid helium electro-magnet, a Transition Radiation Detector (TRD), two Time of Flight (TOF) detectors, a tracker composed of eight layers of silicon wafer detectors, an Anti-Coincidence Counter (ACC), a Ring Imaging Cherenkov Counter (RICH), an Electromagnetic Calorimeter (ECAL), as well as numerous electronics and other avionics devices.

The magnet and cryogenic systems will be designed and built by Eidgenossische Technische Hochschule in Zurich (ETH-Zurich) through a sub-contract. The Vacuum Case of the magnet is an integral part of the USS-02, and will be built and certified by JS. There will be two (2) Vacuum Cases built: a Structural Test Article (STA) and a flight article. The STA will be used to demonstrate fabrication and assembly techniques and for structural verification testing. The STA will be built as a flight spare, and is therefore identical to the flight article.

The experiment's electronics, scintillators, and detectors shall be designed and built at multiple institutes in Europe and Asia. Final assembly will occur at the Centre Européen de Recherche Nucléaire (CERN) in Geneva.

ALPHA MAGNETIC SPECTROMETER (AMS) PAYLOAD

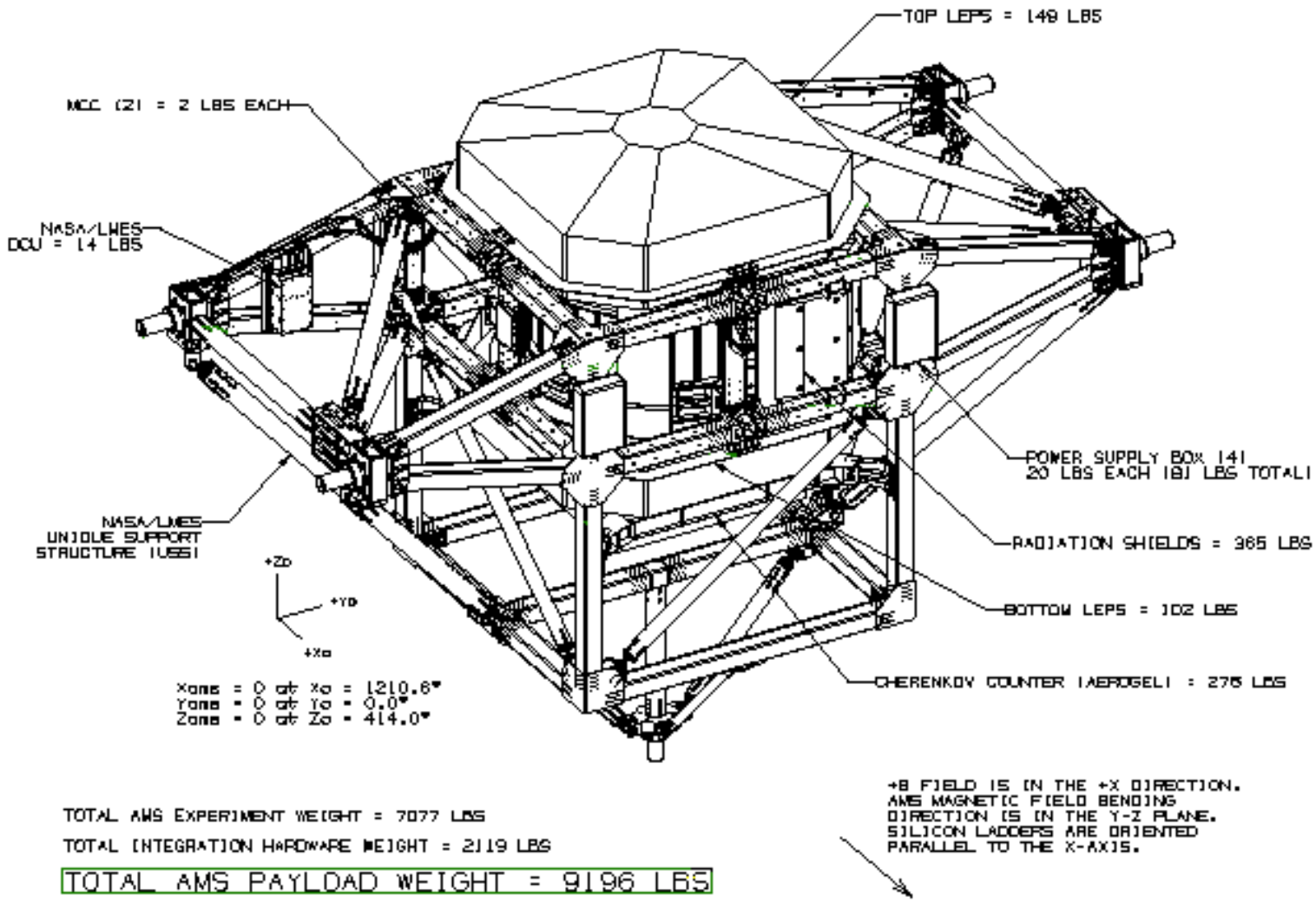

TOTAL AMS EXPERIMENT WEIGHT = 7077 LBS

TOTAL INTEGRATION HARDWARE WEIGHT = 2119 LBS

TOTAL AMS PAYLOAD WEIGHT = 9196 LBS

Figure 2-1: Alpha Magnetic Spectrometer – STS-91 Configuration - Launch, Landing, and On-Orbit

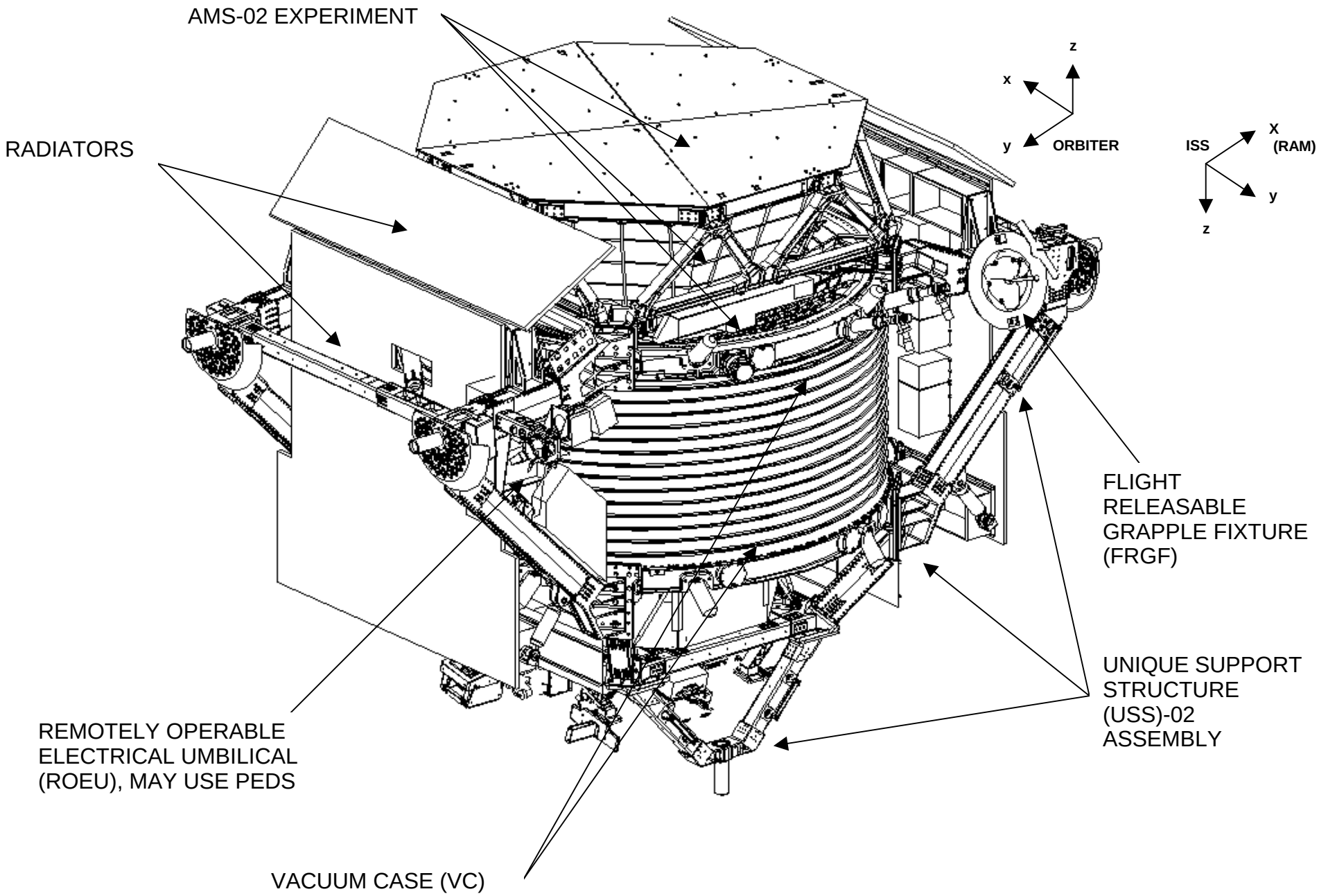

Figure 2-2: Alpha Magnetic Spectrometer – 02 Configuration - Launch, Landing, and On-Orbit

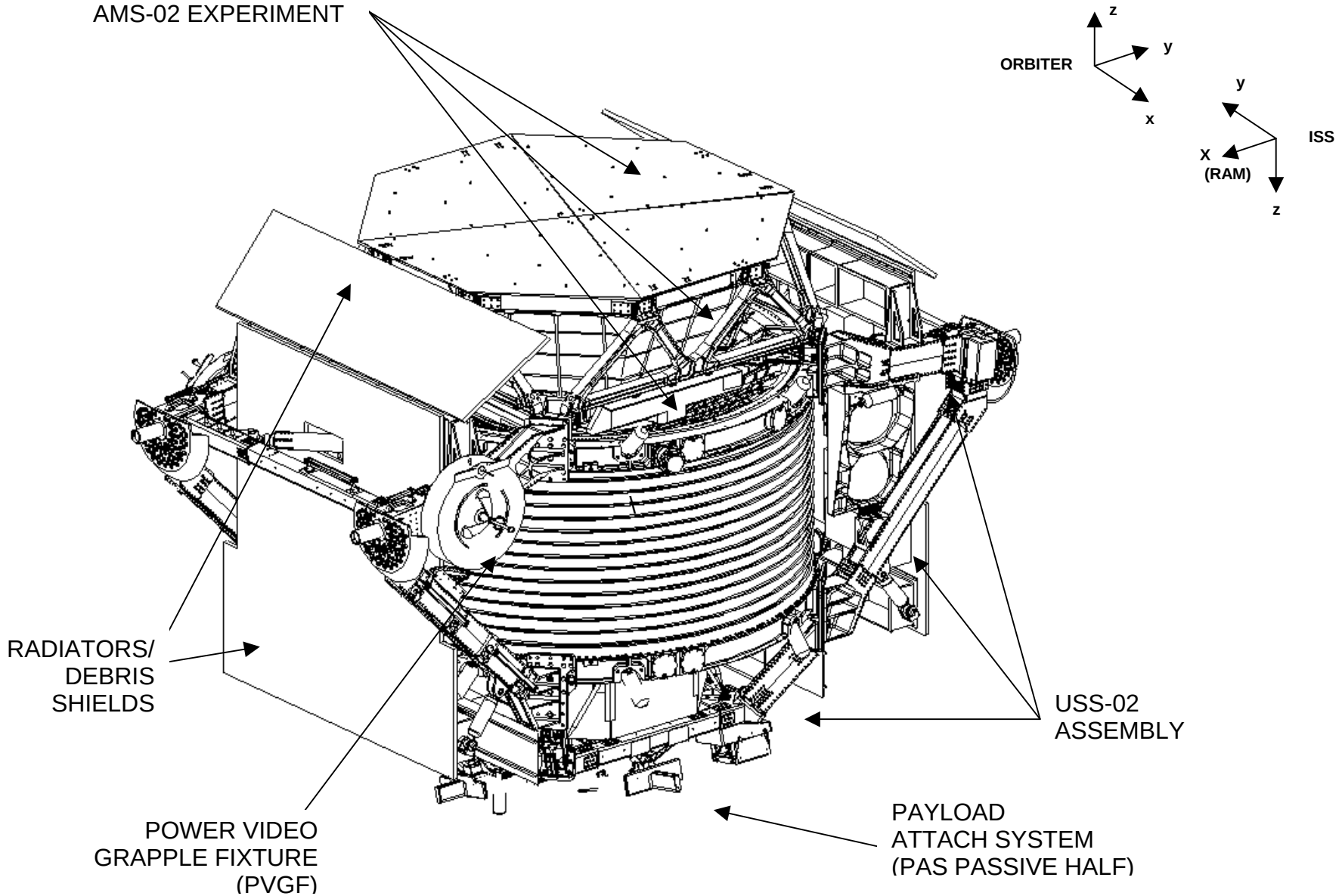

Figure 2-3: Alpha Magnetic Spectrometer – 02 Configuration - Launch, Landing, and On-Orbit

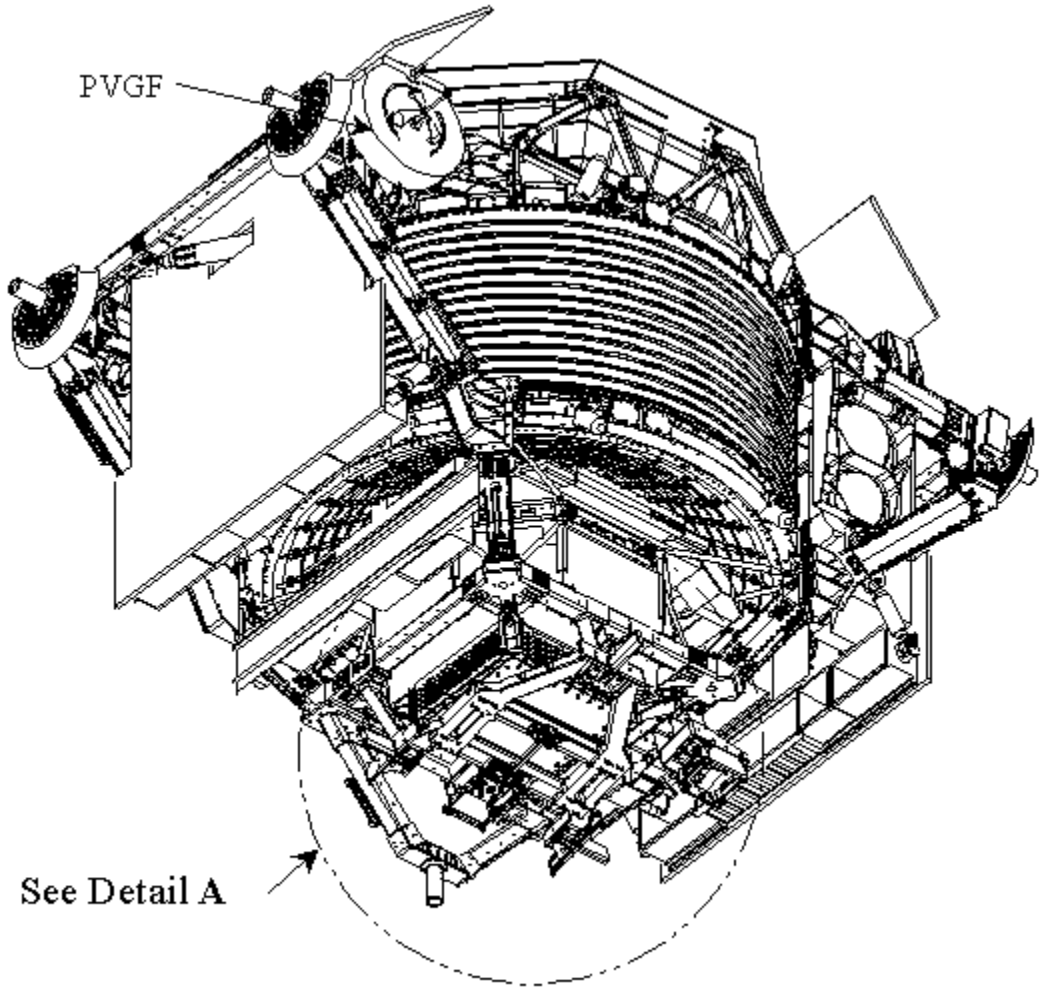

Figure 2-4: Alpha Magnetic Spectrometer – 02 Configuration - Launch, Landing, and On-Orbit

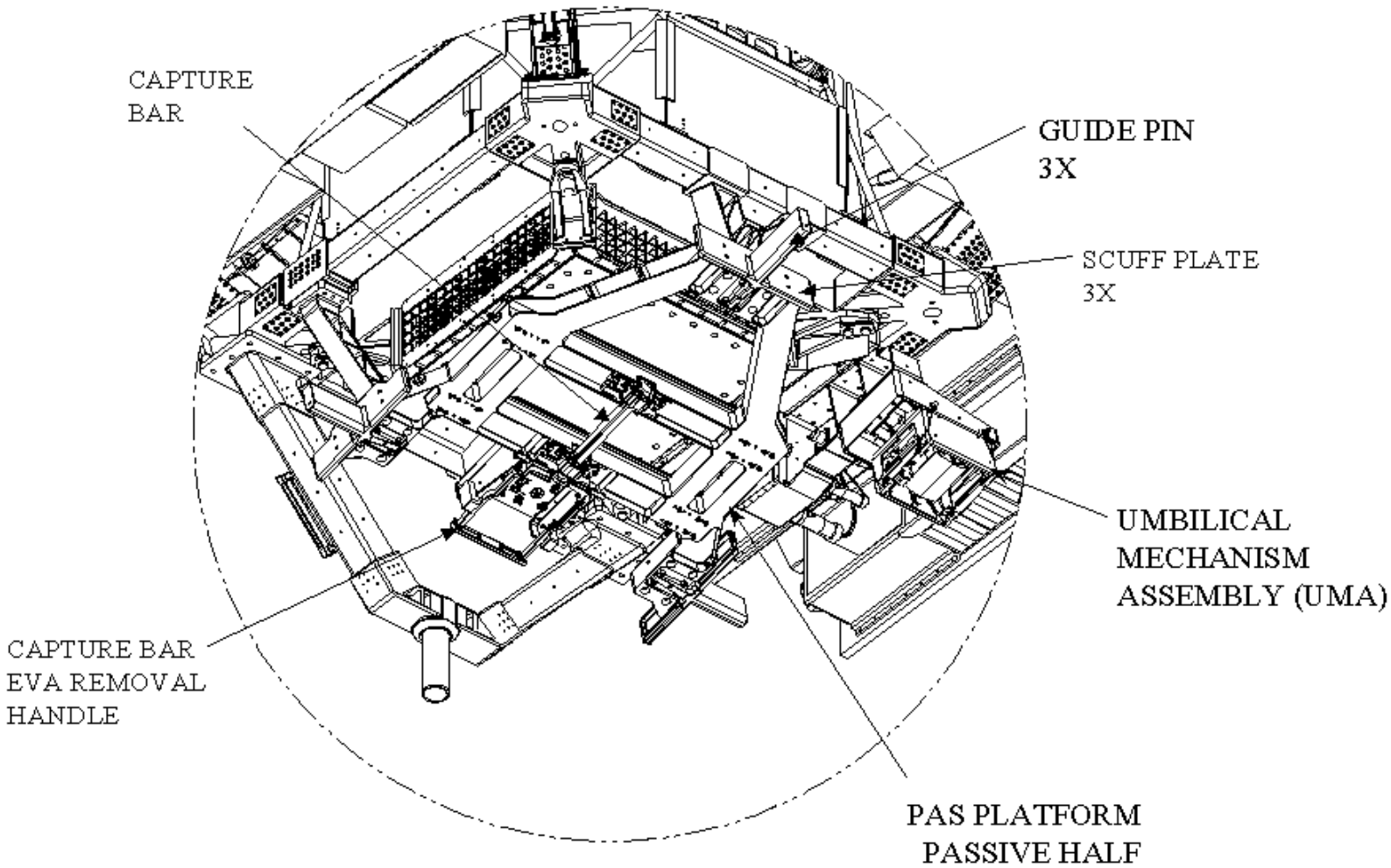

Figure 2-5: Alpha Magnetic Spectrometer – 02 Configuration Close-up of Payload Attach System (PAS)

3. Description of Structures

The AMS-02 experiment consists of a large cryogenic superconducting magnet, cooled by superfluid helium and supported by the USS-02. The Cryomagnet Vacuum Case is constructed of Aluminum 2219 and Aluminum 7050-T7451. The toroidal Vacuum Case has a 2679.8-millimeter (mm) outer diameter, an 1115-mm inner diameter, an 858-mm Inner Cylinder height, and a 1464-mm Outer Cylinder height (Figure 4). The outer skin of the Cryomagnet Vacuum Case is a ring-stiffened cylinder made of Aluminum 7050-T7451. There are two large support rings on the top and bottom of the Outer Cylinder. These support rings are made of Aluminum 7050-T7451 and mate to the Conical Flanges and the Outer Cylinder through bolted/double O-ring interfaces. The Inner Cylinder is a monocoque design made of Aluminum 2219-T852. The top and bottom Conical Flanges will be made of one plate of Aluminum 2219-T62 that is spun and machined to their final rib-stiffened conical shape. The Conical Flanges and Inner Cylinder are welded together to make the final closeout structural weld. Details of this weld can be found in Section 12 of this document. Material samples and testing will be performed on all of the Vacuum Case primary components. This testing has been coordinated with NASA Structures Engineering Division (NASA/SED). There are eight (8) Aluminum 7050-T7451 support pads located on the magnet that interface to USS-02 structure.

Suspended inside the Cryomagnet Vacuum Case is the magnet, a large annular superfluid helium tank, and 200 layers of super-insulation and four vapor cooled shields. All of this ‘cold-mass’ is supported at eight locations that interface to the USS-02 using sixteen non-linear support straps. The use of the pre-tensioned non-linear composite straps is necessary in order to reduce the heat leak from the Cryomagnet Vacuum Case to the cold mass. The magnet developer has utilized similar linear straps for many years on ground based cryogenic magnets. Linear support straps have also been used by several cryogenic systems that have flown in the Shuttle. Notably, the Superfluid Helium On-Orbit Transfer (SHOOT) experiment utilized strap supports. The magnet developer has significant experience in the design of strap systems. Although linear straps do not present the same dynamic characteristics, the design approach, strap materials, arrangement, and assembly techniques are similar for non-linear straps. A cross-section view of the Vacuum Case is provided in Figure 3-1.

The superfluid helium is considered a consumable item for normal operations. The payload will launch with ~2500 liters of superfluid helium and will return to Earth with 0 liters of superfluid helium. The effects of this will be considered in all loads analyses as described in Section 17.2.1.

Several secondary structural components are mounted to the outside of the Cryomagnet Vacuum Case. These components include the Tracker, the Anti-Coincidence Counter (ACC), and parts of the cryogenic pumps. The Tracker and ACC are very similar, if not identical to the STS-91 version of AMS. Verification of these items will be described in more detail in Section 17 of this report.

The USS-02 primary members consist of extruded aluminum tubing with a minimum wall thickness of 0.25-inch made from 7075-T73511. Most USS-02 joints are made of 7050-T7451 6-inch thick plate and are machined. The USS-02 attaches to the Space Shuttle Orbiter with four (4) longeron trunnions and one (1) keel trunnion. The degrees of freedom at the Orbiter interface are X and Z for the two (2) primary longeron trunnions, Z for the two (2) stabilizer longeron trunnions, and Y for the keel trunnion. The STS interfaces will meet the requirements defined in NSTS-21000-IDD-ISS [15]. The AMS-02 payload attaches to the ISS via the Payload Attach System (PAS). The PAS hardware on the AMS-02 consists of three guide pins and a capture bar. The PAS

design will meet the requirements defined in SSP-57003 [9] and SSP-57004 [10]. The design will be documented in SSP-57213, AMS-02 to ISS Hardware ICD [35].

Several secondary structural components are mounted to the USS-02. These components include the Electromagnetic Calorimeter (ECAL), the Transition Radiation Detector (TRD), the TRD gas supply system, the Ring Imaging Cherenkov Counter (RICH), various electronics crates, various components of the Thermal Control System (TCS), and the Meteoroid and Orbital Debris (MMOD) shields. Most of these systems have been added to the AMS-02 when compared to the STS-91 version. Each of these components will be covered later in this document (Section 17). The experiment configuration is shown in Figure 3-2.

A NASA Structural Analysis Computer Program (NASTRAN) finite element model was prepared by Lockheed Martin Space Operations (LMSO) during the design phase of the project. The math model is shown in Figures 3-3 through 3-5. An example of a detailed stress model for the USS-02 joint is shown in Figure 3-7. A NASTRAN loads model is being developed to characterize the payload dynamic characteristics and to provide loads to the more detailed stress models. Detailed stress models are also being developed so that localized areas can be studied in detail. There are two expected non-linearities associated with this payload:

a) Sloshing of the superfluid helium from the cryogenic magnet system, and the Xenon and Carbon Dioxide (CO_2) from the TRD gas re-supply system. All of these non-linearities will be enveloped in the linear finite element model that is used for loads assessments. More detail is given on these systems in Sections 17.2.1 and 17.2.2.

b) The composite strap system that supports the cold mass is non-linear. This system employs sixteen (16) non-linear straps to suspend the cold mass (weighing ~4,600 pounds) inside of the Cryomagnet Vacuum Case. Testing of this system and model correlation will be discussed in detail in Section 17.1.4.

The payload will be deployed from the Shuttle to ISS. All requirements for a deployable payload stated in NSTS-21000-IDD-ISS [15] will be met.

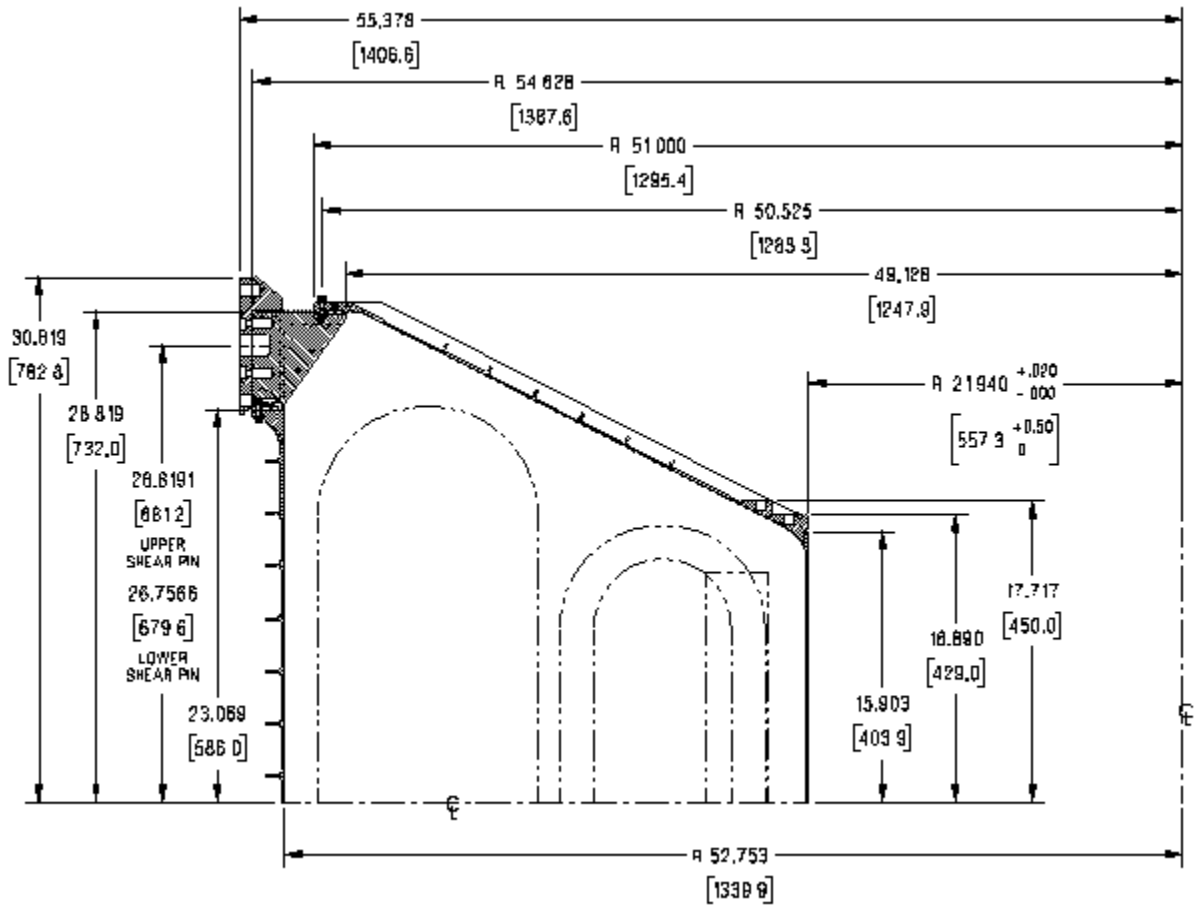

Figure 3-1: Alpha Magnetic Spectrometer – 02 Cryogenic Magnet Cross Section

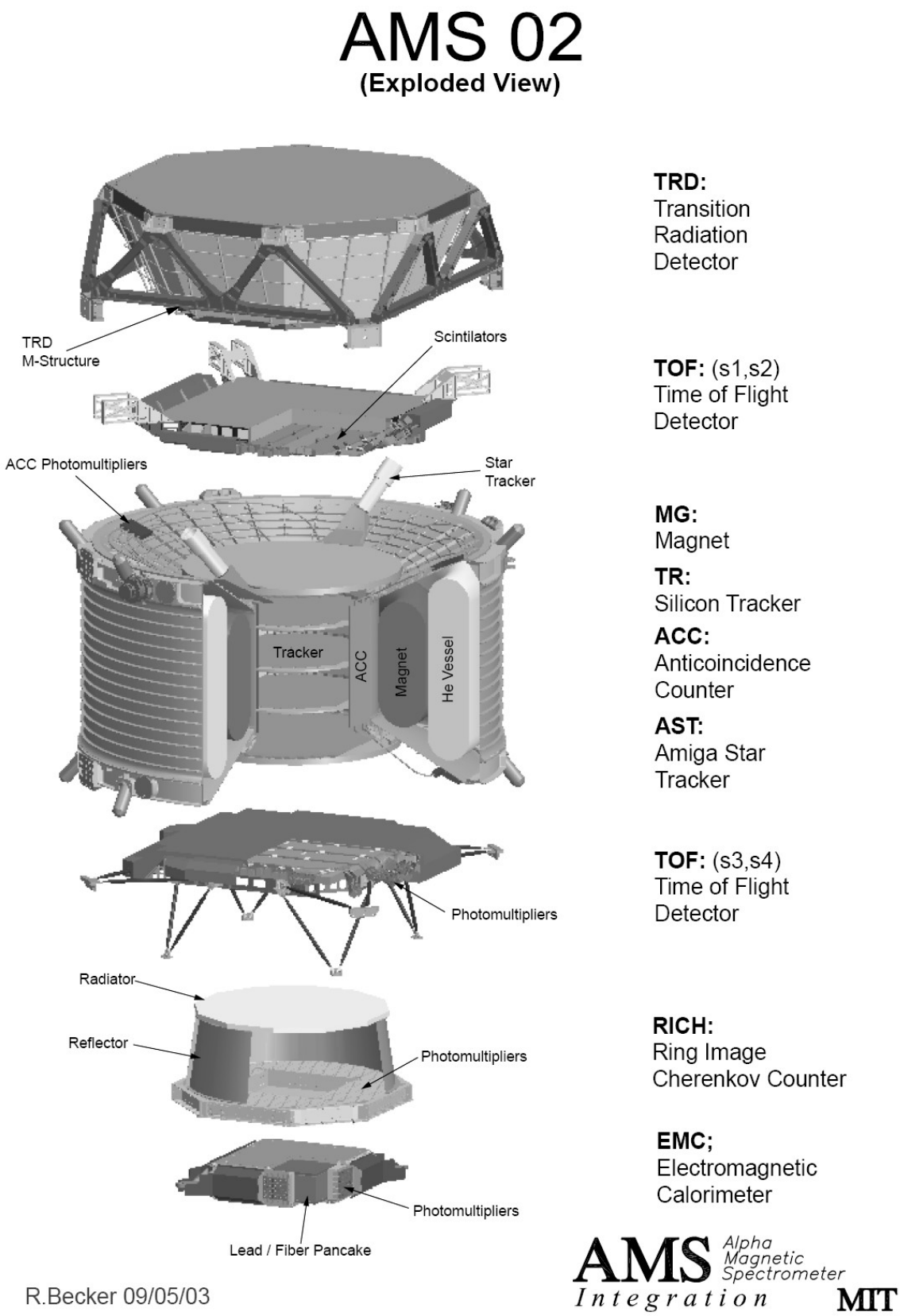

Figure 3-2: Alpha Magnetic Spectrometer – 02 Experiment Configuration

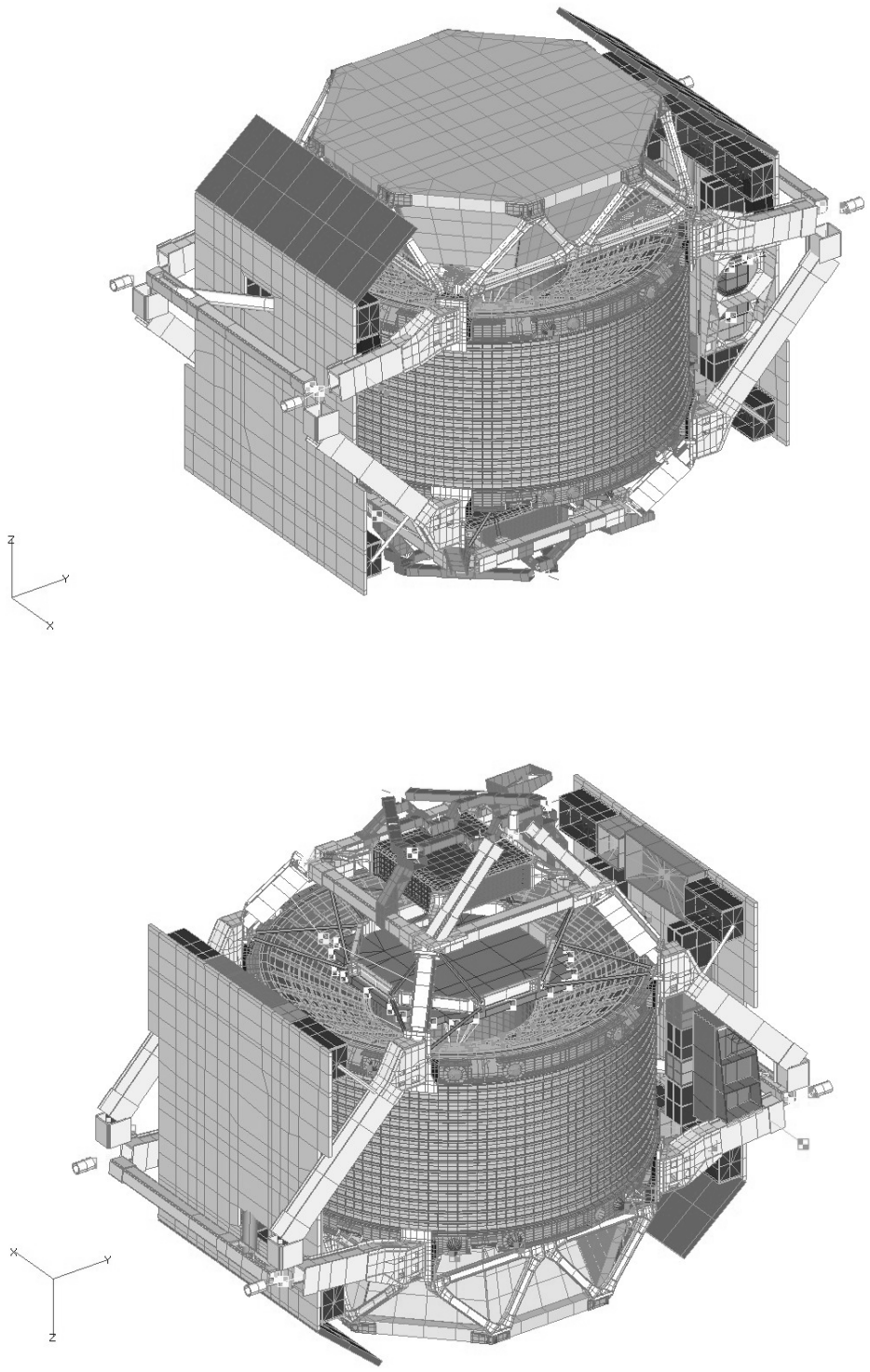

Figure 3-3: Alpha Magnetic Spectrometer – 02
NASTRAN Finite Element Model

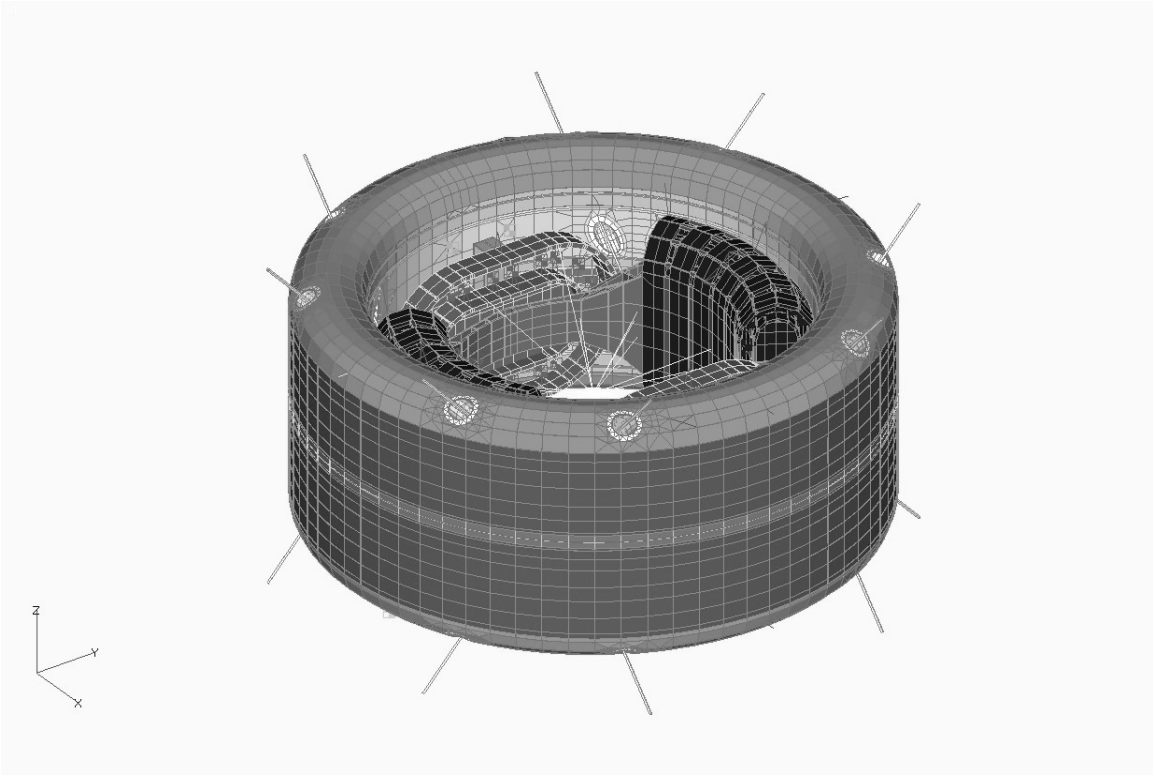

Figure 3-4: AMS-02 Magnet and Superfluid Helium Tank FEM

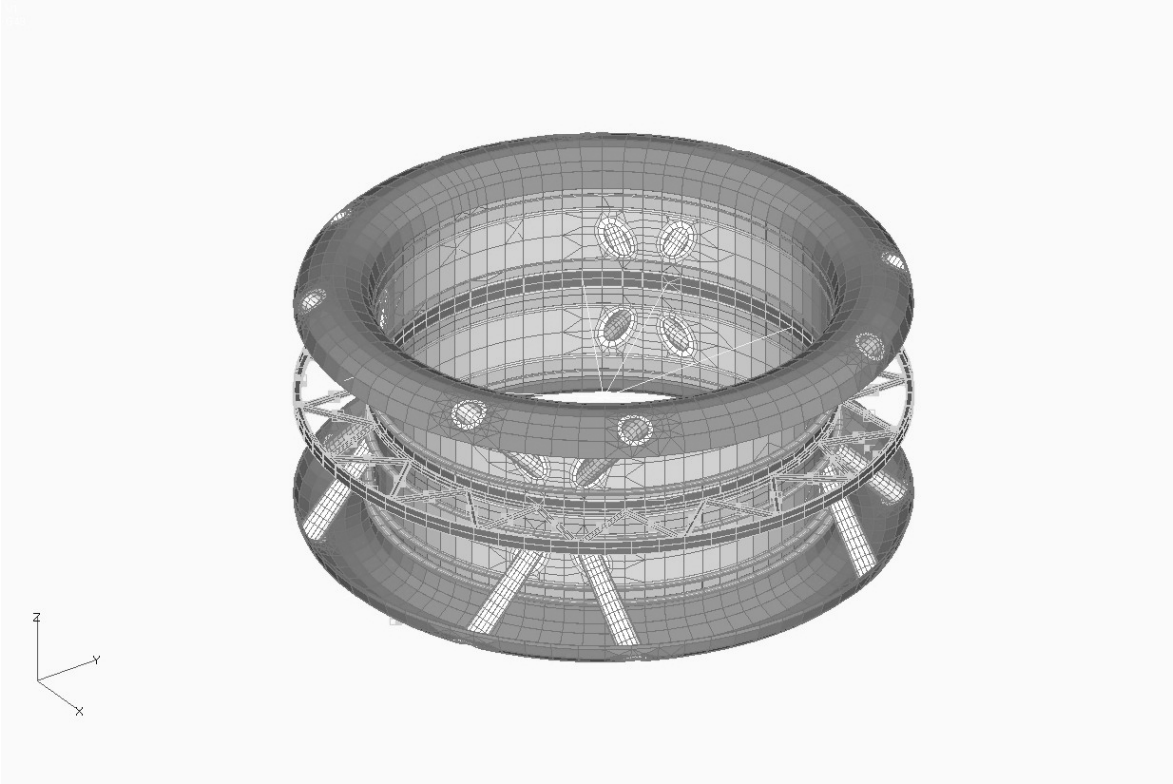

Figure 3-5: AMS-02 Superfluid Helium Tank FEM

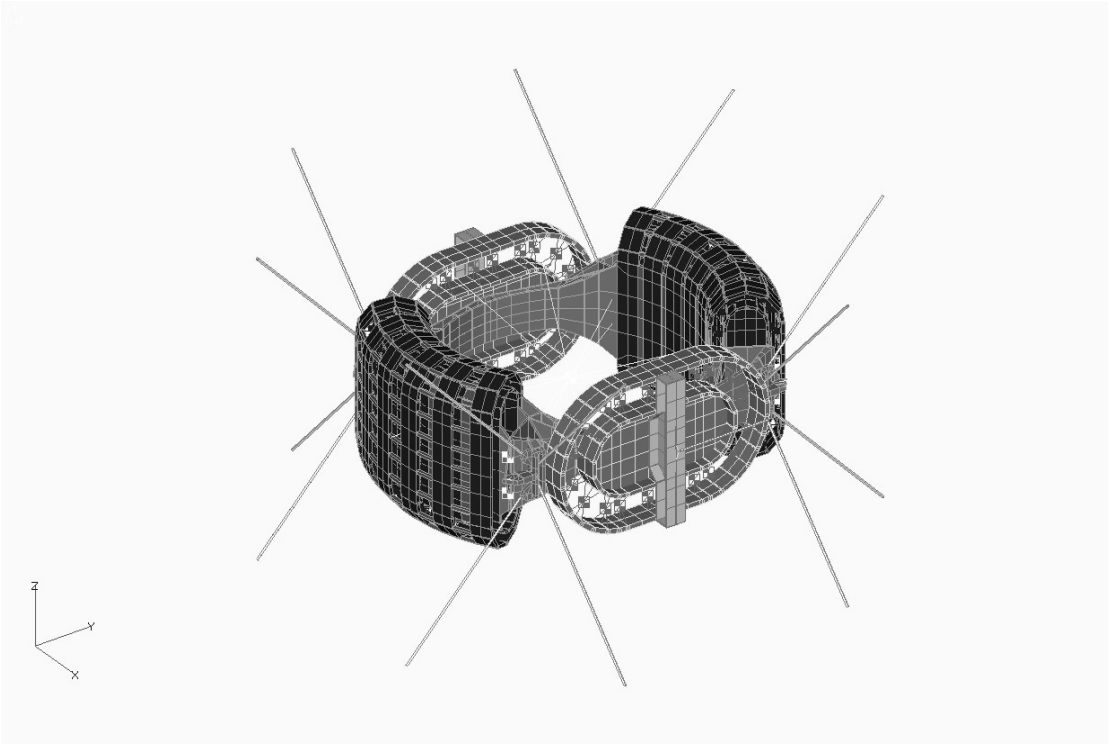

Figure 3-6: AMS-02 Magnet FEM

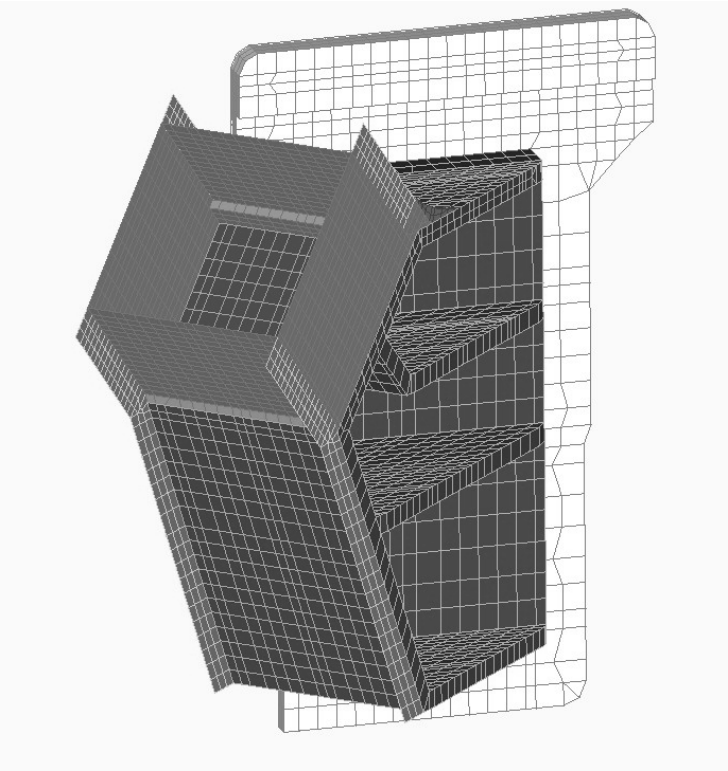

Figure 3-7: Example of USS-02 Joint Detailed FEM

4. Design Limit Load Factors

The critical load conditions affecting the AMS-02 payload occur primarily from liftoff and landing stresses. The magnet is not turned on until the payload is on the ISS. Although the current mission scenarios do not call for magnet charging in the payload bay, the current plans do not preclude the possibility of energizing the magnet in the payload bay of the Shuttle. The primary mission of the payload will include charging the magnet to full power for three years while the experiment takes data aboard the ISS. The magnetic loads are completely self-contained within the magnet support system. No magnet loads will be transferred to the Shuttle or to the ISS but must be considered for the design of the magnet support structure. The fact that there is no load transfer from the magnet to the USS-02 will be proven by test during magnet operations on the ground (see Section 17.1.3). In addition, Shuttle Remote Manipulator System (SRMS) operations, Space Station RMS (SSRMS), Payload Attach System (PAS) berthing loads, PAS mated loads, and extravehicular activity (EVA) crew induced loads will be assessed for this payload. There are currently no plans for EVA; loads are being assessed for contingency reasons only.

For the purposes of this document, primary structure is defined as the structure that provides the primary load path for all subsystems and secondary structural components. Secondary structure is defined as those components of the payload that are not a part of the primary load path and that can be treated as separate entities for the purpose of loads analysis. Examples of secondary structure are scientific instruments and detectors, electronic boxes, and radiators. In this document, a component has been classified as small secondary structure if its weight is less than 500 pounds. Components that weigh more than 500 pounds but are not part of the primary load path are classified as large secondary structure.

4.1 Primary Structure and Large Secondary Structures

Table 4.1 and 4.2 show the design load factors for the primary structure of the AMS payload. The USS-02, magnet Vacuum Case, magnet support system, and the magnet support structure are considered primary structural elements. The key to Table 4.1 is as follows: ***N*** represents translational load factors in terms of gravities; ***R*** represents rotational load factors in terms of rad/sec/sec. All possible permutations of positive and negative (±) loads shall be considered in the strength assessment.

Note that the load factors specified for design of the primary structure do not include the effects of random vibration. For components with a significant mass, the random vibration loads that are transmitted through the Orbiter structure are small relative to the loads from the low frequency transient environment. Since the AMS-02 payload weight is 14809 pounds, the random vibration effects are considered negligible for the primary structure.

These load factors for the primary structure are similar to those used for the STS-91 AMS mission, are derived from the design coupled loads analysis, and have been coordinated with the NASA Structures Working Group. These primary structure load factors will also be used to determine loads for some of the large (>500 lbs) secondary components as will be detailed (in Section 17).

All load factors presented in this document have been coordinated with the SWG and the ISS Structures Team. Approval of the SWG and the ISS Structures Team will be obtained prior to any updates. AMS-02 feels that the current design load factors for any

given detector are significantly conservative to prevent unnecessary delays during the final verification cycle.

The trunnion misalignment loads, on-orbit thermal loads, and friction loads are addressed in Section 17.1. Note that a design cycle coupled loads analysis has been performed and the results were reported to the SWG and the ISS Structures Team. Refer to Section 5 for details of the design coupled loads analysis.

Table 4-1: Liftoff and Landing Design Limit Load Factors

Event	N_x	N_y	N_z	R_x	R_y	R_z
Liftoff	±5.7	±1.6	±5.9	±10	±25	±18
Landing	±4.5	±2.0	±6.5	±20	±35	±15

Note: Apply in AMS Coordinate System, which coincides with Orbiter Coordinate System directions.

As part of the AMS-02 weight savings effort, two Design Coupled Loads Analyses (DCLAs) were performed in order to develop less conservative load factors for some of the components. Worst-case net load factors and interface displacements from those runs were generated for the radiators, RICH, upper and lower TOF, and TRD. These load factors are listed in Tables 5-1 and 5-2. These DCLAs are described in more detail in Section 5.

4.2 On orbit Loads

Table 4.2 shows the interface forces that will be assessed for the ISS PAS mated condition. These interface forces were obtained from SSP-57003 [9] and represent the worst loads due to berthing and re-boost events on ISS.

Table 4-2: ISS On-Orbit Primary Structure Design Limit Loads

Condition	Fx (lbs)	Fy (lbs)	Fz (lbs)	Mx (lbs*in)	My (lbs*in)	Mz (lbs*in)
1	420	40	-70	-4620	-32370	-6140
2	-410	-50	70	-4770	33740	-10710
3	-250	-640	120	51870	19620	2610
4	250	640	-120	-51870	-19620	-2610
5	-190	100	-480	-15800	14300	3070
6	190	100	490	-7780	-14440	4370
7	-520	-180	90	-14390	43410	-18850
8	210	510	-10	38990	-9200	25610

Note: -Loads Defined in the PAS/UCCAS coordinate system as shown in SSP57003, Figure 3.1.3.1.2.1-1
-Loads are summed about the centerline of the PAS Capture Bar-

4.3 Emergency Landing

The emergency landing load factors are found in Table 4.1.1.3.3-1 of NSTS-21000-IDD-ISS [15] and are listed in Table 4.3 below. Nomenclature is the same as for liftoff and landing. These loads are considered ultimate loads. Note that the design limit loads for liftoff and landing envelope these loads.

Table 4-3: Emergency Landing Ultimate Load Factors

N_x	N_y	N_z
+4.5	+1.5	+4.5
-1.5	-1.5	-2.0

4.4 Experiments, Secondary Structure

For design and analysis of detectors less than 500 lbs. and their mounting hardware, the limit load factors are contained in *Simplified Design Options for STS Payloads* (JSC-20545A) [11]. These loads are listed in Table 4.4 and include the effects of random vibration. These load factors are to be applied in any axis, with a load factor of twenty-five percent of the primary load applied to the remaining two orthogonal axes, simultaneously. For those experiment components that weigh more than 500 lbs, detector specific load factors will be shown in Appendix B. These load factors are meant to encompass all phases of the mission (i.e. liftoff/landing, on-orbit, berthing, etc.).

Table 4-4: Launch/Landing Design Limit Load Factors for Small Secondary Structures

Weight (pounds)	**Load Factor (g)**
<20	40
20-50	31
50-100	22
100-200	17
200-500	13

The secondary structure design load factors for on-orbit loads are the same as given in section 4.2 as defined in SSP-57003 [9] and are also shown in Table 4.5. These load factors apply to all secondary structures on AMS-02.

4.5 Acoustic Loads

The acoustic loads environment is defined in NSTS-21000-IDD-ISS [15], Table 4.1.1.5-1.

The experiment contains large flat honeycomb panels to support several of the detectors. Two of these are for the Time of Flight components above and below of the magnet. The honeycomb panels are square with a perimeter of about 1350mm. The thickness of the aluminum core is 100 mm for the upper TOF and 50mm for the lower TOF. A 0.5 mm aluminum skin is used. The upper TOF is connected to the TRD system. The lower TOF has 16 supports to the USS-02 structure. There are additional honeycomb panels as part of the tracker system that was flown on STS-91. Flight data was recorded on STS-91 and compared to acoustic predictions. These comparisons can be found in Reference [6].

A zenith radiator panel will be at the top of the payload and will be exposed to acoustic excitation. Just below the zenith radiator panel is a TRD composed of 20 layers of gas filled tubes. Radiator panels are also potential acoustic receivers. The acoustic model that was used for STS-91 will be modified to include the entire new experiment configuration. The results of this analysis will be used to help determine the appropriate load factors and random vibration levels for the components that may be susceptible to acoustic excitation. (The components that will be assessed for acoustic loads include the following: TRD, Tracker, TOFs, radiator panels, and RICH).

The acoustic assessments performed to date provide the load factors given in table 4.5. Components listed as TBD are still being assessed.

Table 4-5: Acoustic Load Factors

Component	Load Factor (g)
Zenith radiators	12.0
TCS radiators (ram and wake)	3.0
Tracker radiators	3.0
TRD upper and lower panels	0.1
TRD octagon panels	9.0
TOF panels	TBD
RICH	TBD

These components must account for the acoustic loads by combining these load factors with the load factors for the low-frequency transient environment as indicated in Section 16.2. The acoustic analysis will be revisited as the design matures.

4.6 EVA/EVR Loads

4.6.1 EVA Loads

Although EVA is not planned near the AMS-02 while in the Orbiter or on ISS, all external components, which could have a crew or crew actuated tool interface, will withstand the loads defined in SSP-57003 [9], Table 3.1.1.2.6-1. These loads include kick-loads, EVA handhold loads, and torque fastener loads.

4.6.2 EVR Loads

With the exception of the grapple fixtures, which are addressed in the next section, Extra-Vehicular Robotics (EVRs) are not planned near the AMS-02 while in the Orbiter or on ISS. If EVR become necessary for the AMS-02, the loads requirements in SSP-57003 [9], section 3.1.1.2.3 will be used.

4.6.3 SRMS/SSRMS and Grapple Fixtures

The AMS-02 will be required to have a minimum of two grapple fixtures. One Flight Releasable Grapple Fixture (FRGF) will be required for the Shuttle Remote Manipulator

System (SRMS) to remove the payload from the Orbiter. The SRMS will hand the payload off to the Space Station Remote Manipulator System (SSRMS). The SSRMS will grapple the payload through a Power Video Grapple Fixture (PVGF). The requirements have not been completely defined by ISS for the PVGF. The structural design loads for both of these maneuvers can be found in SSP-57003 [9], section 3.1.1.2.3. For all SRMS operations, the document refers to NSTS-21000-IDD-ISS [15], paragraph 14.4.5 and 14.4.1.6. For the SSRMS operations, the document refers to SSP-42004 [25]. The PVGF interface loads are currently being added to NSTS-21000-IDD-ISS [15]. In the interim, the loads provided in Table 4-6 will apply to the PVGF interface.

Table 4-6: Interface loads for the SSRMS attaching to the PVGF

Case	Torsion Moment (ft-lb)	Bending Moment (ft-lb)	Shear Force (lbf	Grapple Shaft Force (lbf)
1	3231.	3231.	108.	1800.
2	2807.	2807.	295.	1800.
3	2177.	2177.	310.	1800.

4.7 Eddy Current Induced Loads

The superconducting magnet has a very small risk of having a ‘quench’ while on-orbit, and it will go through a quench test while on the ground. “Practical Cryogenics” [34] describes a quench as follows:

> The magnet will only function properly if all of the conductors remain in the superconducting state. If any part of the windings goes ‘normal’ (or resistive), the current passing through it will cause ohmic heating (I^2R). This heating increases the size of the normal zone. Once the process has started, it is possible to stop it only if the disturbance is very small, or the magnet is ‘stabilized’. Otherwise, the normal zone propagates rapidly through the whole of the coil, and may spread onto other parts of the magnet. All the stored energy in the magnet is dissipated, evaporating the helium very quickly (in parts of the cryosystem) and warming the magnet. This is called a ‘quench’.

During a quench the magnetic field can drop from full field to no field in a matter of seconds. This creates an induction loop in any conductive looped material near the magnet. This means that an induction loop can be created in the Helium Tank and the Vacuum Case. These Eddy Currents create some load on the Helium Tank and the VC. This load will be calculated by the magnet developer and included in the design of both the Helium Tank and the VC for all scenarios where it is applicable.

4.8 Micro-gravity Loads

There are only a few components on the AMS-02 payload that could cause micro-gravity disturbances on the ISS. The cryocooler pumps, the TRD Gas Supply System pumps, and various thermal control system pumps will be operated at various times during the nominal operations of AMS-02. AMS-02 equipment will meet the requirements defined in SSP-57003 [9] and its PIRN 57003-NA-0018A.

4.9 Ground and Air Transportation Loads

The AMS-02 will have a multi-use primary support stand (Figures 4-1 and 4-2) which will be used to stage the USS-02 during fabrication, transportation, and storage. The VC will have a Vacuum Case Test Fixture (VCTF) that will be used during sine sweep testing of the STA VC/CMR. The VC will also have a shipping fixture that will be used for all transportation of the STA VC, Flight VC, CMR and Flight Magnet. The Multi-purpose Lifting Fixture will be used during crane lifts of the VC as well as various other components. The Primary Lifting Fixture will be used during crane lifts of the primary support stand with and without the payload. Truck and airplane transportation, as well as all other ground operations can be performed with the USS-02/magnet Vacuum Case only or with the entire payload. All ground and air transportation load factors can be found in SD 74-SH-0002B [28], but they are summarized below. The structural design criteria of the ground handling equipment is covered in another document, but the basic factors of safety have been included in Table 4-7and Section 6.2 for reference only.

Table 4-7: Transportation Load Factors and Factors of Safety

Load Case		**Static**	**Forklift**	**Hoist**	**Truck**	**Air**	**Dolly** (5 MPH)
Factors of safety	Ultimate			5.0	3.0	3.0	3.0
	Yield	3.0	3.0	*3.0	2.0	2.0	2.0
Load Factors (G)	Fore/Aft		1.0/-1.0		1.5/-1.5	3.0/-3.0	1.0/-1.0
	Lateral		0.5/-0.5		1.5/-1.5	1.5/-1.5	0.75/-0.75
	Up/Down(+)	1.0	2.0	1.0	3.0	3.0/-3.0	1.5
Load Condition		1g down	Simultaneously	1g down	Independent+ gravity (except Up/down)	Simultaneously	Independent +gravity (except Up/down)

* Optional if 5.0 on Ultimate is Achieved

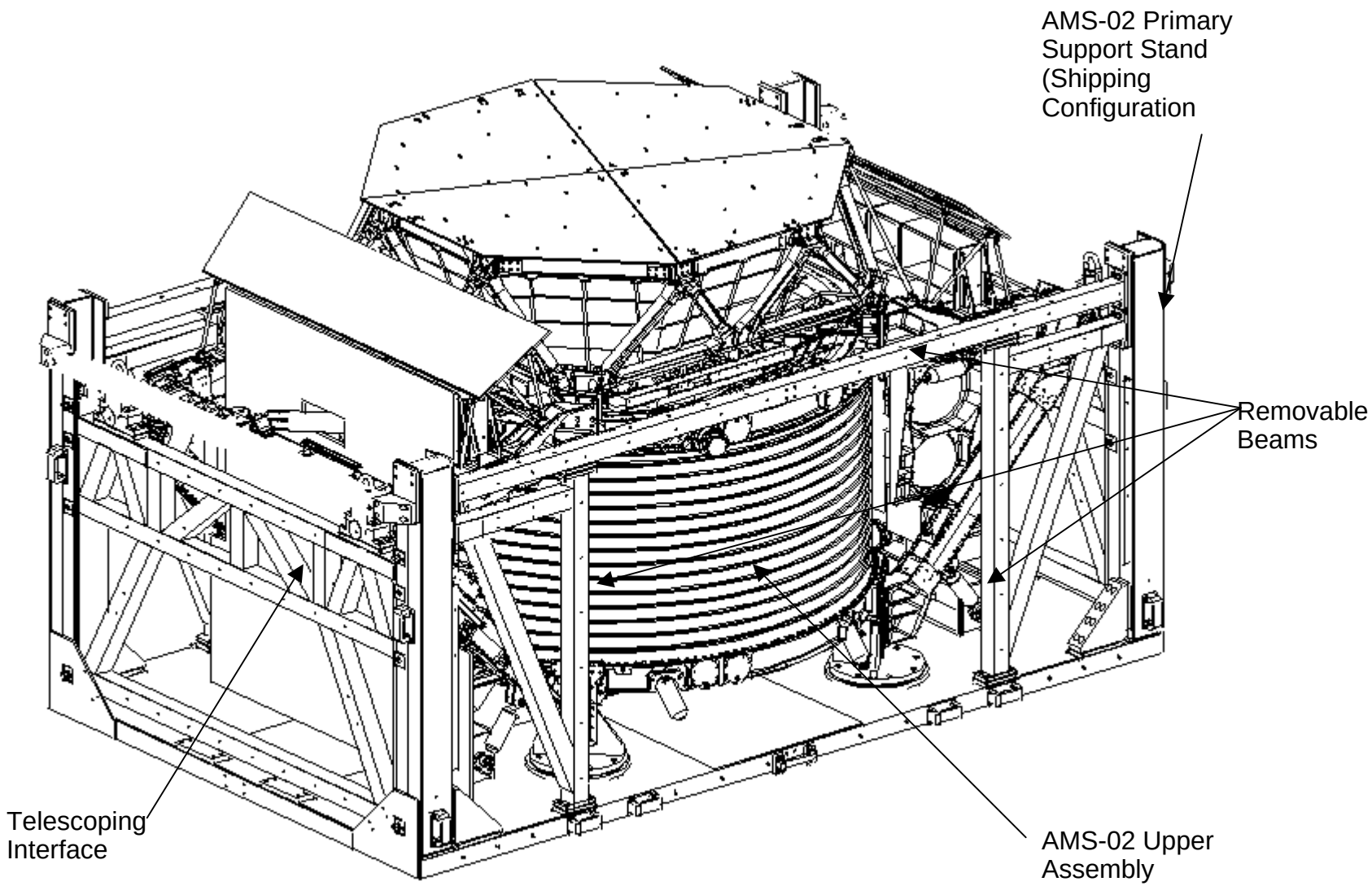

Figure 4-1: Alpha Magnetic Spectrometer - 02 Primary Support Stand Without Lower USS

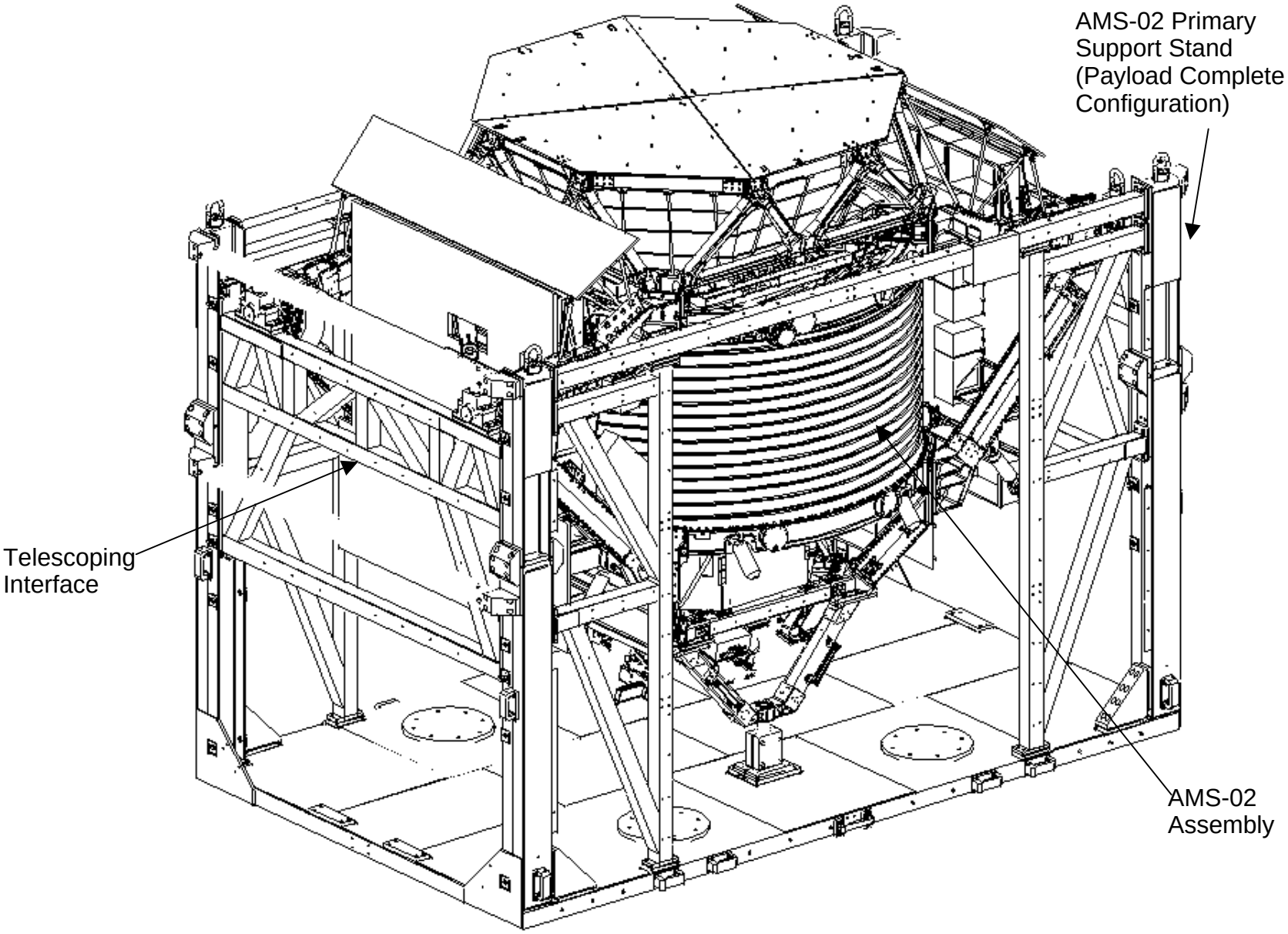

Figure 4-2: Alpha Magnetic Spectrometer - 02 Primary Support Stand With Lower USS (Raised)

5. Design Coupled Loads Analysis

Two preliminary design cycle coupled loads analyses (DCLAs) have been performed for the AMS-02 flight, and the results are shown in Tables 5.1 and 5.2. For the first run, the AMS-02 was placed in the payload bay in a doublet manifest with the keel in bay 6 (X_o = 880.20), and Bay 10 (X_o = 1124.07). Boeing-Downey provided the Space Shuttle liftoff and landing models with forcing functions [3], based on the information provided in Reference [21]. The purpose of the analysis was to refine the design load factors. Liftoff and normal landing forcing functions were used in the analysis. The forcing functions that have been supplied were developed for the super lightweight external tank. For the second run, the baseline manifest for flight UF-4 which was current at the time was used in the analysis. The first DCLA used an uncertainty factor of 1.5 on all loads, while the second DCLA used an uncertainty factor of 1.25. All uncertainty factors were coordinated with the SWG and ISS Structures Team.

Thfirst design cycle coupled loads analysis did not account for the nonlinearity of the cold mass support system as the strap assemblies were still undergoing testing. Once that testing was complete, a second, nonlinear design cycle was run which incorporated the measured strap curves. There may also be additional design cycle coupled loads analyses at later development stages of this project if warranted. The load factors shown in Table 5.1 include an uncertainty factor of 1.5. Although the Nx and Nz load factors do slightly exceed the original design load factors (shown in Table 4-1), element loads generated by these load factors were all enveloped by the element loads generated by the design load factors. These load factors are still used for the design of most of the Vacuum Case (VC) and USS-02 hardware.

The load factors in Table 5.2 include an uncertainty factor of 1.25 and are completely enveloped by the original design load factors except for the Nz load factor for nominal landing. As before, all element loads generated by these load factors were enveloped by the original design loads. These load factors have been used for the design of several of the detectors and radiators, as described in Section 17.

Table 5-1: First DCLA Liftoff and Landing Load Factors

Event	N_x	N_y	N_z	R_x	R_y	R_z
Liftoff	-5.9 / 0.4	-1.0 / 1.0	-6.5 / 6.4	-6.2 / 5.9	-24.5 / 23.1	-14.2 / 14.2
Landing	-2.6 / 2.4	-1.6 / 1.9	-3.0 / 7.3	-19.7 / 20.7	-32.8 / 33.5	-15.9 / 16.5

Table 5-2: Second DCLA Liftoff and Landing Load Factors

Event	N_x	N_y	N_z	R_x	R_y	R_z
Liftoff	-3.7 / 0.4	-1.4 / 1.6	-1.4 / 1.5	-4.5 / 4.1	-8.4 / 11.0	-3.9 / 4.1
Abort Landing	-1.2 / 1.3	-0.7 / 0.6	-2.1 / 5.6	-5.2 / 4.7	-10.7 / 13.9	-6.0 / 4.8
Nominal Landing	-1.7 / 2.0	-1.1 / 1.1	-2.7 / 7.4	-12.5 / 11.1	-14.7 / 18.1	-12.1 / 10.0

In accordance with NSTS 37329 requirements for the Design Loads Analysis, quasi-static and dynamic clearances will be assessed and any close clearance issues will be identified to the Space Shuttle Program. The math model provided for the Verification

Loads Analysis will include recoverable physical DOF for all locations that have potential clearance issues. In April of 2003, Boeing performed a preliminary clearance assessment for the AMS-02 payload in the Orbiter cargo bay. The Boeing assessment identified eight locations that will be monitored to ensure that adequate clearance exists. These items are listed in Table 5-2. All of the items were classified as “acceptable clearance” except for the two PAS guide pins that were classified as “close clearance” because the dynamic clearance was less than one inch. Displacements from a coupled loads analysis were not available at the time that Boeing made their assessment, so worst-case assumptions were used that is considered conservative. The clearances will be reevaluated when data from coupled transient and quasi-static analyses becomes available.

Table 5.3: Clearances between Orbiter and AMS-02 Hardware

	Payload Hardware	**Orbiter Hardware**	**Static Clearance (inches)**	**Dynamic Clearance (inches)**
1	EVA Handrail	Latch Bridge	5.39	1.70
2	Scuff Plate	Latch Bridge	3.00	Not available
3	Port Radiator Panel	Orbiter Wire Tray	6.98	3.29
4	Port PAS Guide Pin	Closeout Blanket	4.41	**0.72**
5	Starboard PAS Guide Pin	Closeout Blanket	4.41	**0.72**
6	UMA	Closeout Blanket	7.43	3.74
7	Starboard Radiator Panel	Orbiter Wire Tray	6.98	3.29
8	WIF Socket	MPM	5.06	1.37

6. Design Factors of Safety

Various factors of safety will be used on different hardware depending on its intended use, level of complexity, and level of testing. The minimum primary and secondary structure factors of safety are detailed in Appendix A. All of the factors of safety shown in Appendix A have been approved by the SWG and NASA/EM2 [26].

6.1 Flight Equipment

The minimum factors of safety (FS) for structural component design of the AMS-02 experiment and integration hardware for flight environments are shown in Appendix A. If the component is not specifically mentioned in Appendix A, assume a factor of safety of 2.0 (ultimate) and 1.25 (yield) with no structural testing. Components with gapping concerns shall demonstrate a positive margin with a factor of safety of 1.2. All components that are verified with no structural testing will be coordinated with the SWG.

For all joints that do not have the matched drilled or reamed holes, a fitting factor of 1.15 shall be used for all modes of failure associated with structural joints, including bolts and bearing surfaces.

6.2 Ground Handling Equipment

The required FSs for ground handling equipment are contained in SW-E-0002E [18], KHB 1700.7C [22], and NSS/GO-1740.9B [24]. The structural design criteria of the ground handling equipment will not be covered in this document.

7. Margins of Safety

The margins of safety for all structural components must be greater than or equal to zero (0) for all combined load conditions. Margins shall be based on the strength capability of the component expressed in terms of load or stress. Material properties and temperature effects are discussed in Section 12. The effects of differential thermal expansion shall be assessed based on results of thermal analysis.

7.1 Simple Loads

For uniaxial, simple bending, or shear loads the ultimate margin of safety shall be computed as:

$$MS_{ult} = \frac{Breaking\ Load}{FS_{ult} \times Limit\ Load} - 1 \qquad \text{or} \qquad MS_{ult} = \frac{Ultimate\ Stress\ Capability}{FS_{ult} \times Limit\ Stress} - 1$$

The yield margin of safety is computed similarly.

7.2 Combined Loads

For combined loads, such as bending and shear acting on the same plane, interaction formulas shall be used. Interaction formulas are dependent on the stress ratio (*R*) for each type of loading and the nature of the loading:

$$R = \frac{Limit\ Load\ (or\ Stress)}{Critical\ Load\ (or\ Stress)}$$

A subscript is associated with *R* to indicate the type of loading (i.e., R_t for tension, R_S for shear, etc.). The margin calculation is then based on a function of the stress ratios, which is dependent on the nature of the loading.

8. Fracture & Fatigue

8.1 Fracture Control

The fracture control requirements are found in NASA-STD-5003 [7] and SSP 30558B [20]. The AMS-02 payload shall use the guidelines of *Fracture Control Plan for JSC Flight Hardware* (JSC-25863A) [17] to satisfy the requirements of the above-mentioned documents. Bolt patterns may be shown to be fail-safe by an analysis using a FS of 1.0 against failure. The fail-safe analysis shall be contained in the formal stress report. A fracture classification of all parts and fracture analysis of parts, which are fracture critical, is required. All integration drawings shall identify the fracture criticality of the part and the non-destructive evaluation method to be used will be included on the drawings of fracture critical parts.

The AMS-02 hardware shall be certified for a minimum of two (2) launches/landings plus a duration of three (3) operational years plus two (2) contingency years on ISS (per SSP-57003 [9]). JS shall be responsible for all fail-safe and fracture analysis of the AMS-02 primary structure and experiment hardware.

8.2 Fatigue

The fatigue spectrum that will be used for AMS-02 has incorporated fatigue cycle spectra from ground transportation, air transportation, launch, on-orbit, and landing environments. This spectrum is felt to be extremely conservative because we have over estimated the number of cycles for each environment. In addition, we have over estimated the loads environment for the air transportation phase. A detailed description of the development of the spectrum is given in LMSEAT 33818, *Calculation of Combined Loading Spectrum for the Alpha Magnetic Spectrometer (AMS-02) Payload.* Fatigue/fracture analysis of AMS-02 hardware will always be performed using the most current revision of LMSEAT 33818.

Table 8-1 is the current AMS-02 fatigue spectrum for NASGRO analysis. Cycles are given for the Flight Vacuum Case, STA Vacuum Case and Other Hardware.

Table 8-2 is the current AMS-02 fatigue spectrum for the strap system. Included in this table is the actual load used in the straps for each percent load. The SWG has confirmed that fatigue testing of the strap systems is not a safety requirement since each flight strap will be tested to 1.2 x limit load statically. The AMS-02 team decided that fatigue testing of this system would still be performed to provide added insurance and confidence in the design.

A simplified strap fatigue spectrum was then developed. Load steps that were close in percentage were combined (using the higher percentage). According to the strap manufacturer, *"...We can typically ignore loads that cause stresses less than 10% of the limit stress for the mission. Such low stresses will cause negligible or no fatigue damage or crack growth."* Based on this recommendation, only the cycles with load percentages above a conservative 5% were considered for testing. This allowed for the reduction in the total number of cycles to make the test more manageable. The resulting spectrum is shown in Table 8-3. Two strap systems, excluding the Belleville washers, were tested to this spectrum. A scatter factor of 4 will be applied for all analytical fatigue calculations, but for this test, a scatter factor of 1 was applied. Since 2

strap systems were tested, there is adequate testing to provide the added insurance and confidence in the strap system.

Table 8-4 has the maximum/minimum strap loads, based upon the 3-01 AMS-02 model, which were used in calculating the testing loads. For comparison, Table 8-5 has the strap loads from the most current model, 6-02.

Table 8-1: AMS-02 Fatigue Spectrum

Loading Event			Stress Level % of Maximum Inertial Load		Cycles			
					Vacuum Case			Other hardware
			Max	Min	STA	Flight	Flight + Magnet	
Transportation	Truck		28.40%	-28.40%	1,444	3,081	1,757	1,878
			20.50%	-20.50%	1,765	3,766	2,148	2,295
			14.80%	-14.80%	11,234	23,966	13,668	14,604
			10.60%	-10.60%	31,937	68,133	38,857	41,518
			7.60%	-7.60%	90,836	193,784	110,517	118,087
			5.60%	-5.60%	123,736	263,971	150,546	160,857
			4.00%	-4.00%	160,648	342,717	195,456	208,843
			3.30%	-3.30%	1,184,080	2,526,038	1,440,631	1,539,305
	Aircraft	Taxing	36.00%	-36.00%	17,832	26,748	17,832	17,832
		Take-off	36.00%	-36.00%	594	892	594	594
		Cruise	11.40%	-11.40%	1,069,920	1,230,408	695,448	1,069,920
		Landing	36.00%	-36.00%	30	45	30	30
		Taxing	36.00%	-36.00%	17,832	26,748	17,832	17,832
1st Liftoff	Liftoff		100.00%	-100.00%	1	1	1	1
			90.00%	-90.00%	3	3	3	3
			80.00%	-80.00%	5	5	5	5
			70.00%	-70.00%	12	12	12	12
			60.00%	-60.00%	46	46	46	46
			50.00%	-50.00%	78	78	78	78
			40.00%	-40.00%	165	165	165	165
			30.00%	-30.00%	493	493	493	493
			20.00%	-20.00%	2,229	2,229	2,229	2,229
			10.00%	-10.00%	2,132	2,132	2,132	2,132
			7.00%	-7.00%	2,920	2,920	2,920	2,920
			5.00%	-5.00%	22,272	22,272	22,272	22,272
			3.00%	-3.00%	82,954	82,954	82,954	82,954
2nd Liftoff	Liftoff		100.00%	-100.00%	1	1	1	1
			90.00%	-90.00%	3	3	3	3
			80.00%	-80.00%	5	5	5	5
			70.00%	-70.00%	12	12	12	12
			60.00%	-60.00%	46	46	46	46
			50.00%	-50.00%	78	78	78	78
			40.00%	-40.00%	165	165	165	165
			30.00%	-30.00%	493	493	493	493
			20.00%	-20.00%	2,229	2,229	2,229	2,229
			10.00%	-10.00%	2,132	2,132	2,132	2,132
			7.00%	-7.00%	2,920	2,920	2,920	2,920
			5.00%	-5.00%	22,272	22,272	22,272	22,272
			3.00%	-3.00%	82,954	82,954	82,954	82,954
3rd Liftoff	Liftoff		100.00%	-100.00%	1	1	1	1
			90.00%	-90.00%	3	3	3	3
			80.00%	-80.00%	5	5	5	5
			70.00%	-70.00%	12	12	12	12
			60.00%	-60.00%	46	46	46	46
			50.00%	-50.00%	78	78	78	78
			40.00%	-40.00%	165	165	165	165
			30.00%	-30.00%	493	493	493	493
			20.00%	-20.00%	2,229	2,229	2,229	2,229
			10.00%	-10.00%	2,132	2,132	2,132	2,132
			7.00%	-7.00%	2,920	2,920	2,920	2,920
			5.00%	-5.00%	22,272	22,272	22,272	22,272
			3.00%	-3.00%	82,954	82,954	82,954	82,954

Note: Spectrum uses 1 Transportation, 1 Testing, 1 On Orbit Cycle and 3 Liftoff/Landing Cycles

Table 8-1 Continued AMS-02 Fatigue Spectrum

1st Landing	Landing		100.00%	-100.00%	1	1	1	1
			90.00%	-90.00%	1	1	1	1
			80.00%	-80.00%	3	3	3	3
			70.00%	-70.00%	3	3	3	3
			60.00%	-60.00%	3	3	3	3
			50.00%	-50.00%	3	3	3	3
			40.00%	-40.00%	13	13	13	13
			30.00%	-30.00%	148	148	148	148
			20.00%	-20.00%	891	891	891	891
			10.00%	-10.00%	1,273	1,273	1,273	1,273
			7.00%	-7.00%	2,099	2,099	2,099	2,099
			5.00%	-5.00%	6,581	6,581	6,581	6,581
			3.00%	-3.00%	8,701	8,701	8,701	8,701
2nd Landing	Landing		100.00%	-100.00%	1	1	1	1
			90.00%	-90.00%	1	1	1	1
			80.00%	-80.00%	3	3	3	3
			70.00%	-70.00%	3	3	3	3
			60.00%	-60.00%	3	3	3	3
			50.00%	-50.00%	3	3	3	3
			40.00%	-40.00%	13	13	13	13
			30.00%	-30.00%	148	148	148	148
			20.00%	-20.00%	891	891	891	891
			10.00%	-10.00%	1,273	1,273	1,273	1,273
			7.00%	-7.00%	2,099	2,099	2,099	2,099
			5.00%	-5.00%	6,581	6,581	6,581	6,581
			3.00%	-3.00%	8,701	8,701	8,701	8,701
3rd Landing	Landing		100.00%	-100.00%	1	1	1	1
			90.00%	-90.00%	1	1	1	1
			80.00%	-80.00%	3	3	3	3
			70.00%	-70.00%	3	3	3	3
			60.00%	-60.00%	3	3	3	3
			50.00%	-50.00%	3	3	3	3
			40.00%	-40.00%	13	13	13	13
			30.00%	-30.00%	148	148	148	148
			20.00%	-20.00%	891	891	891	891
			10.00%	-10.00%	1,273	1,273	1,273	1,273
			7.00%	-7.00%	2,099	2,099	2,099	2,099
			5.00%	-5.00%	6,581	6,581	6,581	6,581
			3.00%	-3.00%	8,701	8,701	8,701	8,701
On-orbit	Berthing		1.00%	-1.00%	34	34	34	34
			0.80%	-0.80%	34	34	34	34
			0.60%	-0.60%	60	60	60	60
			0.40%	-0.40%	179	179	179	179
	Misc		1.00%	-1.00%	117	117	117	117
			0.80%	-0.80%	414	414	414	414
			0.60%	-0.60%	2,404	2,404	2,404	2,404
			0.40%	-0.40%	9,789	9,789	9,789	9,789
			0.20%	-0.20%	62,675	62,675	62,675	62,675
Testing	Sine Sweep	X	104.50%	-104.50%	121			
		Y	82.20%	-82.20%	121			
		Z	107.20%	-107.20%	121			
	Acoustic		10.00%	-10.00%	9,000			

Note: Spectrum uses 1 Transportation, 1 Testing, 1 On Orbit Cycle and 3 Liftoff/Landing Cycles

Table 8-2: Fatigue Spectrum for AMS-02 Straps

Loading Event			Strap Load				Cycles
			% of Inertial Load		Force		
			Max	Min	Max	Min	Flight Vacuum Case + Magnet
Transportation	Truck		28.37%	-28.37%	8173	1252	1,757
			20.45%	-20.45%	6711	1416	2,148
			14.84%	-14.84%	5676	1531	13,668
			10.56%	-10.56%	4886	1619	38,857
			7.59%	-7.59%	4338	1681	110,517
			5.61%	-5.61%	3972	1721	150,546
			3.96%	-3.96%	3668	1755	195,456
			3.30%	-3.30%	3546	1769	1,440,631
	Aircraft	Taxing	36.04%	-36.04%	9588	1094	17,832
		Take-off	36.04%	-36.04%	9588	1094	594
		Cruise	11.40%	-11.40%	5041	1602	695,448
		Landing	36.04%	-36.04%	9588	1094	30
		Taxing	36.04%	-36.04%	9588	1094	17,832
1st Liftoff	Liftoff		100.00%	-100.00%	21392	876	1
			90.00%	-90.00%	19605	967	3
			80.00%	-80.00%	17817	1059	5
			70.00%	-70.00%	16030	1150	12
			60.00%	-60.00%	14242	1242	46
			50.00%	-50.00%	12455	1333	78
			40.00%	-40.00%	10668	1424	165
			30.00%	-30.00%	8880	1516	493
			20.00%	-20.00%	7093	1607	2,229
			10.00%	-10.00%	5305	1699	2,132
			7.00%	-7.00%	4769	1726	2,920
			5.00%	-5.00%	4412	1744	22,272
			3.00%	-3.00%	4054	1763	82,954
2nd Liftoff	Liftoff		100.00%	-100.00%	21392	876	1
			90.00%	-90.00%	19605	967	3
			80.00%	-80.00%	17817	1059	5
			70.00%	-70.00%	16030	1150	12
			60.00%	-60.00%	14242	1242	46
			50.00%	-50.00%	12455	1333	78
			40.00%	-40.00%	10668	1424	165
			30.00%	-30.00%	8880	1516	493
			20.00%	-20.00%	7093	1607	2,229
			10.00%	-10.00%	5305	1699	2,132
			7.00%	-7.00%	4769	1726	2,920
			5.00%	-5.00%	4412	1744	22,272
			3.00%	-3.00%	4054	1763	82,954
3rd Liftoff	Liftoff		100.00%	-100.00%	21392	876	1
			90.00%	-90.00%	19605	967	3
			80.00%	-80.00%	17817	1059	5
			70.00%	-70.00%	16030	1150	12
			60.00%	-60.00%	14242	1242	46
			50.00%	-50.00%	12455	1333	78
			40.00%	-40.00%	10668	1424	165
			30.00%	-30.00%	8880	1516	493
			20.00%	-20.00%	7093	1607	2,229
			10.00%	-10.00%	5305	1699	2,132
			7.00%	-7.00%	4769	1726	2,920
			5.00%	-5.00%	4412	1744	22,272
			3.00%	-3.00%	4054	1763	82,954

Notes: Spectrum uses 1 Transportation, 1 Testing, 1 On Orbit Cycle and 3 Liftoff/Landing Cycles
This is an analytical spectrum for the straps. Simplified testing spectrum is given in Table 8.3

Table 8-2 Continued: AMS-02 Strap System Fatigue Spectrum

1st Landing	Landing		100.00%	-100.00%	22264	830	1
			90.00%	-90.00%	20331	937	1
			80.00%	-80.00%	18399	1045	3
			70.00%	-70.00%	16466	1152	3
			60.00%	-60.00%	14533	1259	3
			50.00%	-50.00%	12601	1367	3
			40.00%	-40.00%	10668	1474	13
			30.00%	-30.00%	8735	1581	148
			20.00%	-20.00%	6802	1688	891
			10.00%	-10.00%	4870	1796	1,273
			7.00%	-7.00%	4290	1828	2,099
			5.00%	-5.00%	3903	1849	6,581
			3.00%	-3.00%	3517	1871	8,701
2nd Landing	Landing		100.00%	-100.00%	22264	830	1
			90.00%	-90.00%	20331	937	1
			80.00%	-80.00%	18399	1045	3
			70.00%	-70.00%	16466	1152	3
			60.00%	-60.00%	14533	1259	3
			50.00%	-50.00%	12601	1367	3
			40.00%	-40.00%	10668	1474	13
			30.00%	-30.00%	8735	1581	148
			20.00%	-20.00%	6802	1688	891
			10.00%	-10.00%	4870	1796	1,273
			7.00%	-7.00%	4290	1828	2,099
			5.00%	-5.00%	3903	1849	6,581
			3.00%	-3.00%	3517	1871	8,701
3rd Landing	Landing		100.00%	-100.00%	22264	830	1
			90.00%	-90.00%	20331	937	1
			80.00%	-80.00%	18399	1045	3
			70.00%	-70.00%	16466	1152	3
			60.00%	-60.00%	14533	1259	3
			50.00%	-50.00%	12601	1367	3
			40.00%	-40.00%	10668	1474	13
			30.00%	-30.00%	8735	1581	148
			20.00%	-20.00%	6802	1688	891
			10.00%	-10.00%	4870	1796	1,273
			7.00%	-7.00%	4290	1828	2,099
			5.00%	-5.00%	3903	1849	6,581
			3.00%	-3.00%	3517	1871	8,701
On-orbit	Berthing		1.02%	-1.02%	3134	1892	34
			0.81%	-0.81%	3094	1894	34
			0.61%	-0.61%	3055	1896	60
			0.41%	-0.41%	3016	1899	179
	Misc		1.02%	-1.02%	3134	1892	117
			0.81%	-0.81%	3094	1894	414
			0.61%	-0.61%	3055	1896	2,404
			0.41%	-0.41%	3016	1899	9,789
			0.20%	-0.20%	2976	1901	62,675
Testing	Sine Sweep	X	104.47%	-104.47%	23174	736	0
		Y	82.18%	-82.18%	18820	1021	0
		Z	107.23%	-107.23%	23736	678	0
	Acoustic		10.00%	-10.00%	4870	1796	0

Notes: Spectrum uses 1 Transportation, 1 Testing, 1 On Orbit Cycle and 3 Liftoff/Landing Cycles
This is an analytical spectrum for the straps. Simplified testing spectrum is given in Table 8.3

Table 8-3: Simplified AMS-02 Strap System Fatigue Spectrum used for Test

Strap Load				Cycles Straps
% Max Inertial		Force (lbs)		
Max	Min	Max	Min	
100.0%	-100.0%	22264	830	6
90.0%	-90.0%	20331	937	12
80.0%	-80.0%	18399	1045	24
70.0%	-70.0%	16466	1152	45
60.0%	-60.0%	14533	1259	147
50.0%	-50.0%	12601	1367	243
40.0%	-40.0%	10668	1474	534
36.0%	-36.0%	9588	1094	36288
30.0%	-30.0%	8735	1581	3680
20.5%	-20.5%	6711	1416	11508
14.8%	-14.8%	5676	1531	13668
11.4%	-11.4%	5041	1602	695448
10.6%	-10.6%	4886	1619	49072
7.6%	-7.6%	4338	1681	125574
5.6%	-5.6%	3972	1721	237105
Total number of cycles				1,173,354

Spectrum includes
1 Transportation spectrum
1 On orbit spectrum
3 Liftoff/Landing spectrum
Cycles with percent loading less than 5% not included.
Scatter factor of 1.0.
Spectrum based upon Flight Vacuum Case

Table 8-4: Maximum and Minimum Strap Loads Used in Strap Fatigue Testing

Load Condition	Strap	Preload (lbs)		Inertial loads (lbs)	
		Maximum	Minimum	Maximum	Minimum
Launch	C1W1	3518	1790	21392	876
	C2W2	1908	1877	16028	1225
Landing Full Cold	C1W1	1908	1903	22264	830
	C2W2	1887	1882	17226	1168
Landing Empty Warm	C1W1	1777	1770	19140	590
	C2W2	1678	1672	14676	787
Ground Transportation	C1W1	2937	1837		
	C2W2	2316	1834		

Note: Maximum and minimum strap loads based on the 3-01 AMS-02 Model

Table 8-5: Maximum and Minimum Strap Loads

Load Condition	Inertial loads (lbs)	
	Maximum	Minimum
Launch	2252	966
Landing Full Cold	2253	966
Landing Empty Warm	2043	524

Note: Maximum and minimum strap loads from 6-02 model.

9. Preloaded Bolts

The latest version of MSFC-STD-486B “Torque Limits for Standard Threaded Fasteners” [37] shall be used for installation of fasteners and application of torque to fasteners in structural joints. Consideration must also be given to the assessment of the bolt preload based on the recommendation of NSTS 08307 [12] in conjunction with MSFC-STD-486B [37], other acceptable industry sources, or specific torque-tension test data.

10. Fastener Integrity

To ensure the integrity of fasteners used for the AMS, lot testing shall be performed to verify compliance with strength and chemical composition requirements per JSC-23642C [16]. NASA will provide most safety critical fasteners in the entire AMS-02 payload; bolts and pins will be procured and tested per JSC-23642C. With the exception of the Cryomagnet bolts, NASA will provide all safety critical fasteners #8 and larger; this is the same approach that was employed for STS-91. Some form of back-out prevention will be used for all fasteners. All of the bolts for the Cryomagnet system will meet the same requirements as the rest of the payload as listed above. The primary method of back-out prevention for all structural bolts is the applied torque as specified in Section 9. The acceptable forms of secondary back-out prevention include: locking inserts, self-locking fasteners (with patch, pellet or strip type of elements), lock-wires (will not be used on any exposed surfaces of the payload that could pose a sharp edge threat), or 'Vibratite'. AMS-02 will provide verification that NASA provided fasteners were installed and that back-out prevention was employed.

The following notes, which meet with the current JSC Materials Branch recommendations, will be adhered to when using Vibratite:

a) For structural and critical fasteners, the primary locking mechanism will be joint preload, and the secondary locking mechanism will be lockwire or a qualified prevailing torque locking feature. Vibratite will not be used as a secondary locking feature.

b) When a conventional secondary locking feature is unavailable, the use of a hard plastic Mylar patch fused to the screw thread may be used. This material is qualified to MIL-F-18240 for vibration.

c) Vibratite should not be used as a lubricant, as it prevents the verification of the actual running torque. Grease or oil (ex: Braycote or Krytox) could be used to increase insert cycle life. However, AMS-02 will consult the authorized Materials personnel for selection of the appropriate lubricant.

d) Vibratite is safe for non-structural, non-critical fasteners that are not load bearing and do not experience Orbiter Launch vibration loads. Applications include avionics boxes, or other hardware in which the primary fasteners are not in the primary load path of the launch vibration.

10.1 Mechanical Fittings

All pressure systems mechanical fittings will use lock wire as the primary means of back-out prevention.

11. Interface Loads

Preliminary interface loads shall be based on the design limit load factors presented in Section 4. These loads have been refined by the preliminary design cycle coupled loads analysis. A second non-linear design cycle coupled loads analysis will be performed once the details on the non-linear strap support system are better understood. Additional design cycle coupled loads analyses will be performed as warranted. The final set of liftoff and landing interface loads, as well as internal loads and deflections, shall be based on the results of the Space Shuttle Program Verification Loads Analysis (VLA). The effects of trunnion misalignment and friction are addressed in Sections 17.1.1.1 and 17.1.1.2.

12. Materials and Welds

All material usage shall be verified in accordance with applicable requirements in this plan, in the payload-specific ICDs, and in NSTS 1700.7B ISS Addendum [14]. Verification shall be demonstrated and documented through the implementation procedure defined in NSTS/ISS 13830C [13].

Description of special materials (e.g., composites, beryllium, and glass) and the special measures that are necessary to verify their strength per NSTS 14046E [19] shall be provided. Currently the only special materials identified are associated with secondary structures and the Cryomagnet support system (composites). Details can be found in Section 17.

Any materials that require a Material Usage Agreement (MUA) will be coordinated with the appropriate NASA personnel.

12.1 Material Properties

Material properties for metallics shall be taken from MIL-HDBK-5H [4]; A-basis or S-basis values shall be used. If an A-basis material is not available, S-basis materials may be considered for the secondary structure with approval from NASA SWG.

12.2 Temperature Effects

For preliminary design purposes, a maximum landing temperature of +140° Fahrenheit shall be assumed for the structure and the material properties shall be de-rated accordingly. The trunnion temperature to determine the landing friction forces is defined in Section 17.1.1.2. The final strength assessment shall use the temperatures determined by thermal analysis. Thermally induced, on-orbit stresses shall be assessed based on the results of the thermal analysis.

The cryogenic magnet operates at ~1.8 degrees Kelvin. Appropriate material properties will be utilized for all structural materials used at this temperature.

12.3 Stress Corrosion Cracking

All metallic materials shall comply with the requirements specified in MSFC-STD-3029 [23].

12.4 Welding

The welding of aluminum alloys shall meet the requirements of PRC-0001B [32] or an equivalent document. ES4, Materials and Processes Branch, and the ISS Structures Team must approve all equivalent documents. This process specification applies to manual arc welding of aluminum alloy flight hardware by any of the following types of welding processes:

- Gas Tungsten Arc Welding (GTAW)
- Gas Metal Arc Welding (GMAW)
- Plasma Arc Welding (PAW)

This process specification shall be called out on the engineering drawing by a drawing note with the following general format:

- WELD AND INSPECT PER NASA/JSC PRC-0001B, CLASS X

All other welding that does not fit within the requirements defined in PRC-0001B [32] shall be coordinated with the SWG and ISS Structures Team.

The Cryomagnet Vacuum Case will include two automatic circumferential closeout welds. The procedure for this weld will be developed by JS in the cooperation of NASA/SED. The procedure will be developed through numerous test welds, non-destructive testing evaluations, inspection process development, destructive testing evaluations, and material testing. This process will include ~25 test welds of flat plates with the same type of weld interface, >50 test samples were statically tested to standard ASTM E8 procedures, a complete circumferential test weld on Conical Flange first article and a flight similar Inner Cylinder, and the weld of the Structural Test Article (STA) Vacuum Case. Results of these tests can be delivered to NASA upon request. These welds will be governed by MSFC-SPEC-504C [38].

The Super Fluid Helium Tank Vacuum Case is a complex aluminum design with numerous pressure containing weld joints both on the exterior of the vessel shell and on the internal helium loop tubing. All vessel material is 5083 aluminum and the helium loop tubing is 1100 aluminum. The structural backbone of the vessel is a machined truss structure made from 5083 plate and 5083 rolled ring forgings and joined together by welding. In contrast to the thickest of the pressure containing welds, these structural weld joints are thicker on the order of several magnitudes and will therefore will require multiple pass weld procedures as opposed to single and 2 pass weld procedures. All welding for this vessel will be made by machine and robotic welding with manual welding practices being utilized for tack welding and potentially, for any unforeseen repair and/or rework. All procedures will be developed and qualified by test by the selected fabricator using production welding equipment. Minimum requirements for the weld qualification protocol shall be per MSFC-SPEC-504C, Class I with the exception that standardized bend tests are being required to evaluate cross sectional weld soundness, and tensile testing at 4 degrees K is being required. For this vessel, all production welds are classified as Class I therefore they are required to be subjected to the highest level of inspection and NDE requirements as specified by MSFC-SPEC-504C. In addition, numerous base material tests from the production material lots will be performed by the fabricator at room temperature and 4 degrees K.

12.5 Welder Qualification

Manual welding shall be performed by a welder qualified and certified in accordance with NASA/JSC PRC-0008A [33] or an equivalent document. ES4, Materials and Processes Branch, and the ISS Structures Team must approve all equivalent documents. Sufficiently detailed records shall be maintained to demonstrate continuity of performance qualification on a semi-annual (6 month) basis. These records shall be made available to the NASA SWG and ISS Structures Team upon request.

Automatic welding shall be performed by a welding operator in accordance with MSFC-SPEC-504C [38].

13. Frequency Verification

The structural modes of the AMS-02 payload shall be verified by a combination of test and analysis. All primary structural components shall be tested; secondary structural components shall assessed by analysis and verified by test if necessary. All verification by analysis alone will be coordinated with the SWG and the ISS Structures Team.

13.1 Primary Structure

Frequency verification of the primary structure shall be fulfilled by a combination of three tests. The results of these three separate tests will be combined to develop the final correlated FEM.

The first test will be a dedicated one-dimensional sine sweep test of two strap support assemblies assembled coaxially. This test will be used to validate the basic nonlinear analysis technique and to provide basic response data for the strap assemblies themselves.

The second test will be performed on the STA VC with a Cold Mass Replica (CMR) and non-linear support straps. The CMR will include a Magnet Mass Replica, a STA SFHe Tank, and a complete ground-based cryogenic system. This entire assembly will be placed inside the Vacuum Case Test Fixture (VCTF) (Figure 13-1) and placed on linear bearings (Figure 13-2.). A sine sweep test will be performed so that the strap assemblies are loaded high enough to show a measurable nonlinear response. This response will then be used to correlate the VC model. The strap load versus stiffness curve has three regions in the cold configuration. The highest region is designed to react launch/landing load levels. The middle region is designed to react on-orbit loads. The lowest region is the preload region and is specifically designed to provide a minimal amount of heat load to the cold-mass from the Vacuum Case. This lowest region is where the straps will be most of the time during nominal on-orbit operations. This region minimizes the thermal conductance of the strap system. During ground operations, some of the straps will remain statically in the second region. This test will be performed with a vacuum pulled on the Vacuum Case and normal liquid helium at 4 degrees K in the STA SFHe Tank. The results of this test will be used to correlate the non-linear model of the system. A pretest analysis and test plan shall be provided to the SWG and ISS Structures Team two months prior to testing.

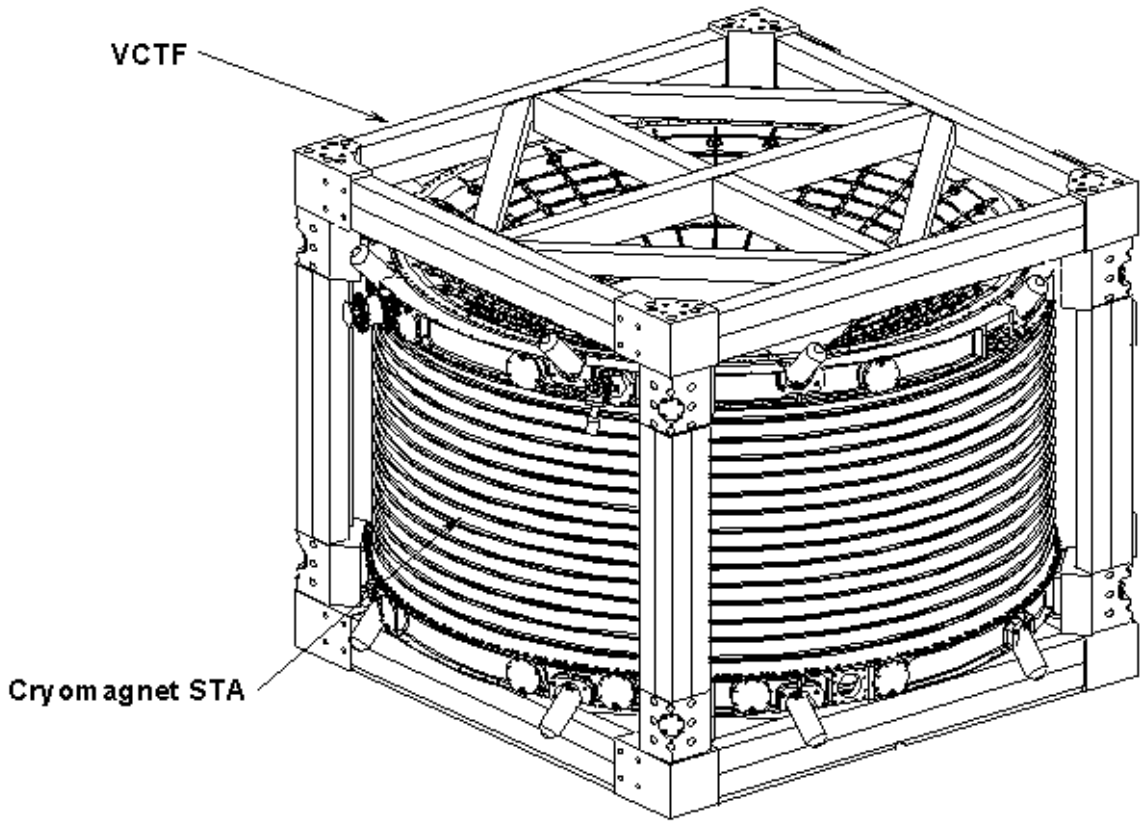

Figure 13-1: STA VC in VCTF

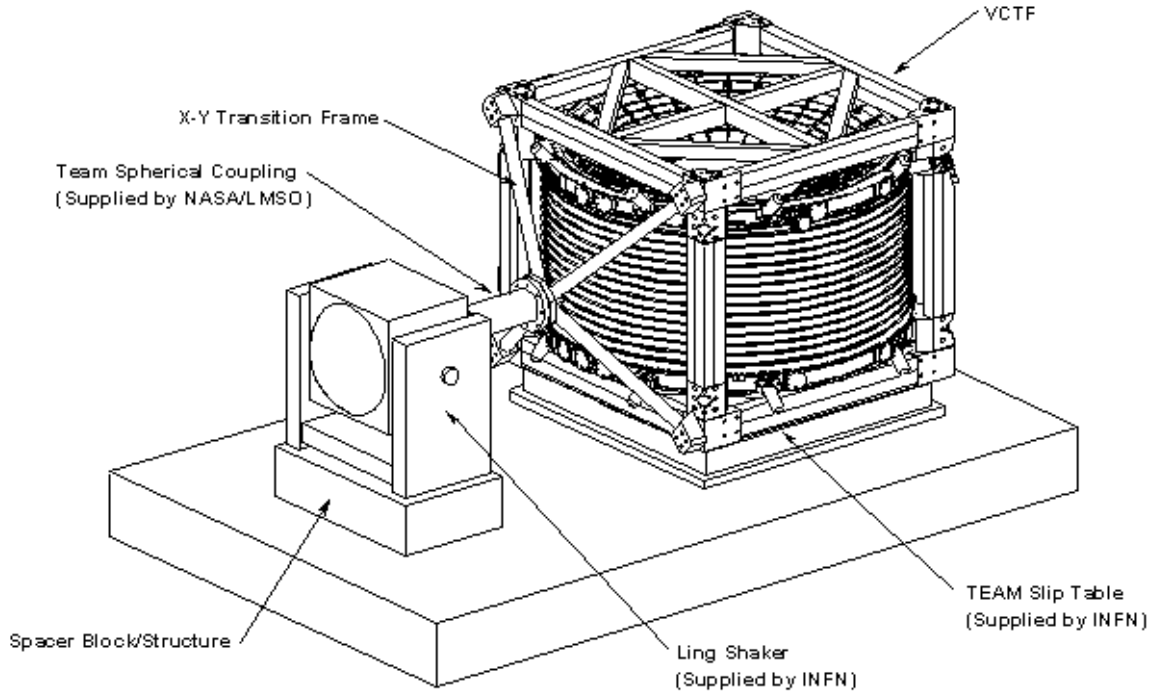

Figure 13-2 STA Sine Sweep Test, XY Configuration

The third test for frequency verification of the primary structure will be a modal test of the entire payload. The test shall consist of the USS-02, the AMS-02 STA Cryomagnet Vacuum Case built to the same drawings as the flight Cryomagnet Vacuum Case, and the CMR suspended inside the STA Vacuum Case by support straps. Pretest analysis will determine whether or not the straps will exhibit non-linear behavior. The goal is to limit the input excitation so as not to excite the second region of the straps or to intentionally over pre-tension the straps so that all straps remain in one region. This testing is shown in Figure 13-3. The AMS test fixture (used for STS-91 modal and static testing) will be used to restrain the AMS-02 payload at the trunnions. Modifications will be made to the AMS test fixture both to accommodate the larger longeron trunnion spacing and stiffen the fixture as required to force the fixture modes out of the test range of interest. This will be verified through a modal test of the new test fixture. Mass and/or dynamic representations of the electronics boxes and secondary structure shall be used during the test. A pretest analysis and test plan shall be provided to the SWG and ISS Structures Team two months prior to testing. Only the Orbiter configuration will be tested. The ISS configuration shall be per analysis only. Section 17 has more details. All modal testing will meet or exceed the requirements defined in NSTS-14046E [19] and SSP-57003 [9].

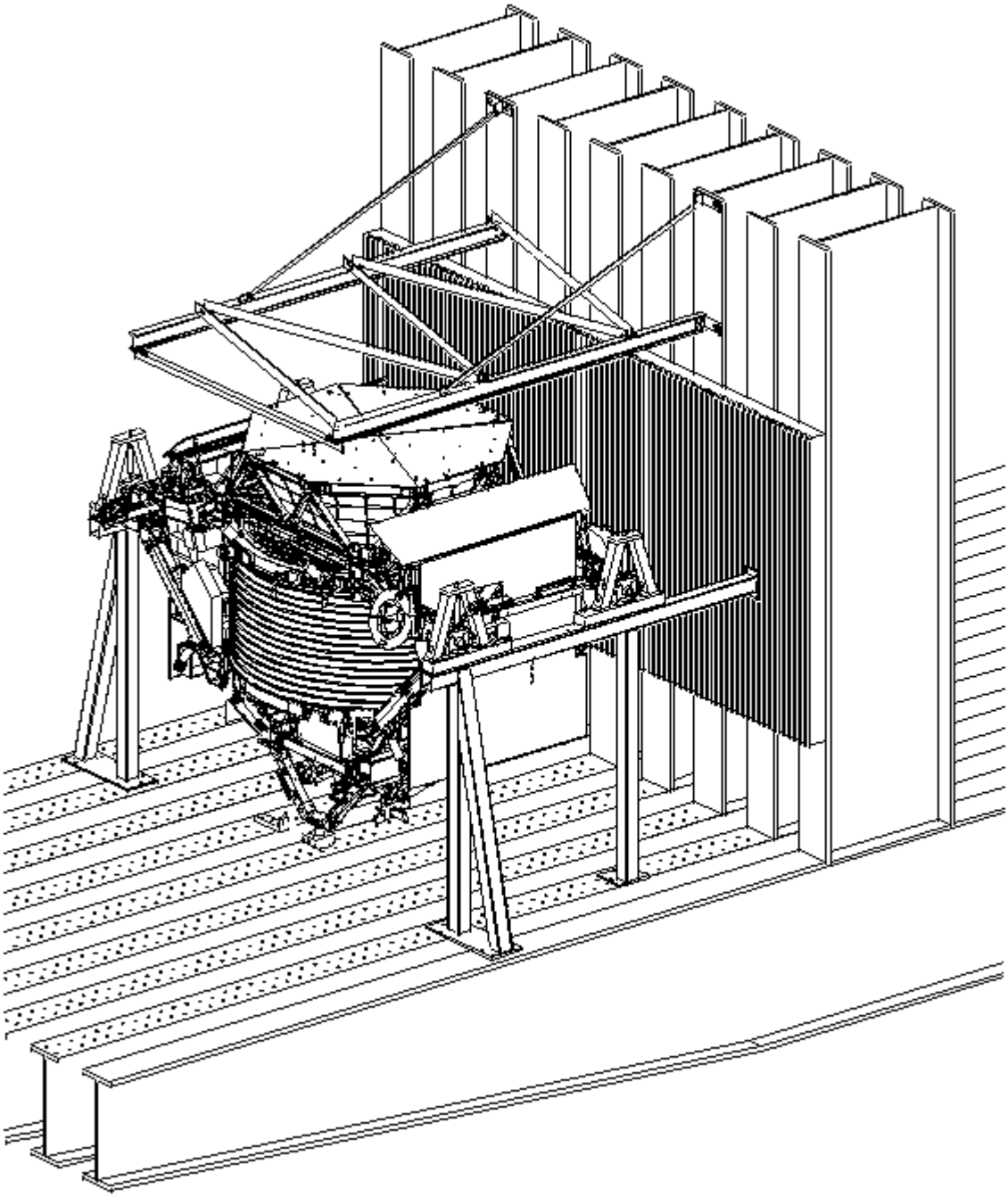

Figure 13-3: Entire Payload Modal and Static Test Configuration

The grapple fixture deploy configuration will be verified by analysis. Details on frequency verification for STS/ISS related deploy and retrieval operations can be found in Section 17.1.1.3. Details on frequency verification for the ISS interfaces can be found in Section 17.2.10.1.

13.2 Secondary Structure

The electronics boxes and experiment components shall be verified by analysis if their fixed interface frequency is analytically predicted above fifty (50) Hertz and by test if the analytical frequency is below fifty (50) Hertz. Details on the individual components can be found in section 17. All verification by analysis will be coordinated with the SWG.

14. Strength Verification

The strength verification of the AMS-02 payload shall be by a combination of test and analysis. All primary structural components shall be tested; secondary structural components shall be assessed by analysis and verified by test if necessary. All verification by analysis alone will be coordinated with the SWG and the ISS Structures Team.

14.1 Primary Structure

The method of strength verification for the primary structure shall be by test and analysis. There are at least three (3) principal tests that shall be performed to demonstrate strength and load path verification. A specific pretest analysis and test plan shall be provided to the SWG and ISS Structures Team two months prior to each test.

The first and second tests are related to the cryogenic magnet structure. The magnet structure must support the loads caused by the magnet on-orbit. Details on the structural testing requirements for the magnet can be found in Section 17.1.3.

The third test will be a load path verification test of the entire payload configuration (all-up test). This test will include the flight USS-02, the STA Cryomagnet Vacuum Case, and any required STAs or mass replicas for other experiment components (secondary structures). The test level shall be 1.1 times limit load. This test shall include load actuators, strain, and deflection gages so that the structure can be correlated. The model shall then be used to demonstrate and verify ultimate capability in the detailed stress analysis. This third test will include several load cases. AMS-02 will assess the feasibility of testing the STA VC while it is installed in the flight USS-02 to 1.4 x limit load for the limiting VC buckling case. If this is feasible without exceeding 1.1 x limit load on the USS-02, then this load case will be performed. If it is not possible to reach 1.4 x limit load on the VC without exceeding 1.1 x limit load on the USS-02, then the NASA SWG will be consulted.

In addition to the all-up static test, separate component testing will be performed on the low margin elements of the primary structure as needed. These tests will include component tests of highly loaded joints, fittings, tubes, etc. Some of these tests will be to 1.4 x limit load, while others could be tests to failure. Several tests have been identified and are listed below.

1) O-ring Test Fixture – This developmental work will provide positive pressure and vacuum testing to help determine the o-ring leak rate and the reaction at the bolted interfaces. The data from these tests will be used to ensure that the VC bolted/o-ring interfaces are modeled correctly in the full system.
2) Bolt-Joint Stiffness Test – This developmental test will measure stiffness at the Outer Cylinder to Ring and Conical Flange to Ring interfaces for correlation of the full system model. Measured stiffness values will be used in the AMS-02 FEM
3) Lower Joint Test – The lower USS-02 joint and the two tubes that attach to it will be tested to failure due to the complex geometry.
4) Interface Plate Test – This test will be used to characterize the interface plate, bolts and shear pin between the USS-02 and the VC. The test will be performed to 1.1 x limit load followed by a check for detrimental deformations. Once it passes this portion of the test, the same configuration will be taken to failure.

One of the main components that will require testing is the magnet support system. Details of testing requirements for this component can be found in Section 14.2 and 17.1.4.

The strength verification requirements for ISS interfaces can be found in Section 17.2.10.2.

14.2 Composite Structures

Sixteen composite straps support the 'cold mass'. Details on the structural testing requirements of the magnet support system can be found in Section 17.1.4.

Several secondary structures contain composite and/or honeycomb panels. Each of these structures only supports the weight of the specific secondary component. Details on each component can be found in Section 17. All composite structures will be designed with the factors of safety shown in Appendix A and the temperature constraints defined in Section 12.2. These requirements meet or exceed the requirements in NSTS/ISS 18798B, Letter Number NS2/90-208 [31].

14.3 Glass Structures

All glass applications are classified as fracture critical if they fail to meet the low released mass (0.25 lbs) or contained part requirements that are detailed in NASA-STD-5003, Section 4.2.3.6.1 [7]. Suitable preflight testing and inspection will be used to screen flaws in unpressurized fracture critical glass components or the glass will be designed to a minimum factor of safety of 5.0 [17, Section 5.2e]. There are no primary structures made of a glass-based material. Preflight testing, where used to verify unpressurized glass articles will normally include a vibration environment sufficient to establish glass integrity in the structural configuration [17, Section 5.2e]. Post-test visual inspection will be performed.

14.4 Pressure & Vacuum Systems

All pressure systems will meet the requirements defined in NSTS 1700.7B ISS Addendum [14]. The pressure system test requirements are discussed in Section 17. All welded interfaces in pressure systems will meet the requirements defined in Sections 12.4 and 12.5. All pressure systems shall be designed as leak-before-burst if at all possible; otherwise a fracture mechanics safe-life approach will be employed. Note that Helium is considered non-hazardous for this application. Appendix E has been provided to summarize the pressure system hardware.

14.4.1 Pressure System Mechanical Fitting Certification Requirements

In order to ensure the integrity of all mechanical fittings used in pressure systems on AMS-02, the following requirements apply:

1. A qualification vibration test of the fitting design to the Minimum Workmanship Level (MWL) found in Table 15.2 will be performed. Once the vibration test is complete, a leak check will be performed on the fitting design. All test data and

supporting analysis will be delivered to JS to support the design and safety reviews.

2. A qualification thermal cycle test of the fitting design will be performed for the predicted thermal cycle magnitudes and life. Once the thermal cycle test is complete, a leak check will be performed on the fitting design. All test data and supporting analysis will be delivered to JS to support the design and safety reviews.
3. A qualification pressure cycle test of the fitting design to the predicted operational and surge (transient) pressure cycle is required. Once the pressure cycle test is performed, a leak check will be performed on the fitting design. All test data and supporting analysis will be delivered to JS to support the design and safety reviews.
4. An acceptance pressure cycle test of the actual flight fitting will be performed. Once the pressure cycle test is performed, a leak check will be performed on the fitting. All test data and supporting analysis will be delivered to JS to support the design and safety reviews.
5. The ultimate safety factor of the fittings shall meet those defined in the 'Lines and Fittings' section of Appendix A. The integrity of hazardous fluid systems shall be verified as specified in NASA-STD-5003 [7].
6. Engagement and operational disengagement cycle life test data to qualify the fitting for the predicted processing cycle life is required. This testing should include full mating and demating of the fittings for four times the predicted processing cycle life. This will demonstrate performance of the sealing surfaces, threads, and other functional mechanisms. This testing will be performed in combination with additional environmental testing when appropriate.
7. Compatibility data for metallic and nonmetallic materials for the appropriate fluid and environmental exposure conditions and durations established by the payload ground and flight operations must be provided. It must be assured that continuous exposure to the system fluid does not cause property changes (e.g., embrittlement, seal swell, softening, corrosion, etc.) of the materials, which could result in fitting leakage, inadequate safety factor, or loss of capability to meet all subsequent environmental and operational requirements.
8. The ability of the fitting design to meet external leakage requirements will be certified for environmental compatibility as specified in paragraph 200.3 of NSTS 1700.7B, and for the payload induced operational environments including the worst case mated configuration. Determination of the worst case mated configuration will address all mating parameters, considering actual assembly procedures, including back off of the fitting within the restraint limits, misalignment, thread relaxation, and location of adjacent support brackets, etc.
9. The mated configuration will include a positive restraint to preclude loss of seal load resulting in leakage of the sealing surfaces. A positive restraint is one that mechanically precludes back off of the fittings and thread friction is not considered an acceptable method (acceptable methods described in Section 10).
10. All certification test environments will meet or exceed those defined Section 15.

14.4.2 Vacuum Seal Certification Requirements

In order to ensure the integrity of the Vacuum Seals used on the AMS-02 Vacuum Case, the following requirements will apply. When implemented, this plan is intended to

provide a two fault tolerant equivalent design against loss of vacuum. The current AMS-02 Vacuum Case design contains four flanged interfaces (8 o-rings) larger than 95 inches diameter. The design also currently includes twenty-five flanged interfaces smaller than 6 inches diameter. There are no o-rings between a 6-inch diameter and a 95-inch diameter in the current design of the AMS-02 VC.

For all o-ring vacuum seals, the AMS-02 Vacuum Case will:

1. Employ a double o-ring design for all o-rings larger than 95 inches diameter.
    a. Note that a three o-ring design is not practical for two reasons:
        i. There is not adequate space in the design to add a third o-ring.
        ii. The proper o-ring compression cannot be established with three o-rings on the large (>98" diameter) o-rings.
2. Employ a double o-ring design for all o-rings smaller than 6 inches diameter.
    a. Note that all of these small o-ring interfaces have a higher reliability because they are:
        i. Have minimal mechanical stressing/loading.
        ii. Easy to produce.
        iii. Easy to inspect.
        iv. Easy to properly compress.
    b. There is not adequate space in the design to add a third o-ring.
3. Employ a bolt spacing of less than 2 degrees per bolt for all o-rings larger than 95 inches diameter.
4. Employ a bolt spacing of no more than 45 degrees per bolt (currently 8 - #10 bolts around circumference) for all o-rings smaller than 6 inches diameter.
5. An o-ring test fixture will be manufactured and tested to test the leak rate through the large o-ring seals. This test fixture will simulate the flanged interfaces, and will also be used to determine the proper finite element modeling method for these same flanged interfaces.

For emergency venting analyses:

1. Two o-ring failure cases will be analyzed:
    a. Assume there are two pinched o-rings such that the leak path is directly from air to vacuum. This is conservative since it assumes that both pinched o-rings are next to one another and not on opposing sides of the VC.
    b. Since the bolt spacing is less than 1.77 inch, a 3 inch gap is assumed for conservatism. Since the flanges should be in metal to metal contact, a 0.001 inch and 0.003 inch gap are both assumed and analyzed.

For all welded vacuum seals, the AMS-02 Vacuum Case will:

1. Meet the requirements defined in Section 12 (Materials and Welds).
    a. These requirements include complete Non-Destructive Evaluations (NDE) of all welds.

i. JS and NASA/EM are currently developing the weld and NDE procedure for the large circumferential welds of the Inner Cylinder to Conical Flange.
ii. Several test samples will be prepared, welded, and tested during this development process.

The following testing will be performed on the small dewar test system:

A small dewar (15 liter) system has been developed to test the emergency vent scenarios. Over 7 tests have been performed with various VC hole sizes and different schemes for internal cryogenic coating on the superfluid Helium tank. AMS-02 used this test data to correlate the full scale cryogenic model and also to determine the best approach for the full scale model. The test plan [39] and final report [40] detail this work. Based on the final report, a recommendation will be made to remove the full scale vent test that was originally planned on the STA VC/CMR system. For this reason, the testing has been removed from the next section.

The following testing will be performed on the STA Vacuum Case:

1. Proof Pressure Test upon delivery to NASA and prior to installation of Cold Mass Replica.
2. Vacuum Leak Check on each large o-ring and the full assembly will be performed upon delivery to NASA and prior to installation of Cold Mass Replica. If leaks are found, additional testing may be performed on the small o-rings.
3. Proof Pressure Test after installation of Cold Mass Replica.
4. Vacuum Leak Check on each large o-ring and the full assembly will be performed after installation of Cold Mass Replica.
5. High Level Sine-Sweep Test at or near operating temperature (1.8K-4K) (used to develop math model of non-linear support strap system – Section 15).
6. Acoustic Test to excite the o-ring sealed interfaces to flight levels (Section 4.4).
7. Vacuum Leak Checks of the entire assembly will be performed during the Sine-Sweep and Acoustic Tests
8. Modal Testing and Static Loads Testing will be performed on entire payload, including the Cold Mass Replica, with a vacuum on the Vacuum Case (Sections 13 and 14).
9. Vacuum Leak Checks of the entire assembly will be performed during the Modal Testing and Static Loads Testing.

The following testing will be performed on the Flight Vacuum Case:

1. Proof Pressure Test upon delivery to NASA and prior to installation of Cryomagnet.
2. Vacuum Leak Check on all o-rings will be performed upon delivery to NASA and prior to installation of Cryomagnet.
3. Vacuum Leak Check on all o-rings will be performed after installation of Cryomagnet and all Cryo-systems.
4. Proof Pressure Test after installation of Cryomagnet and all Cryo-systems.

5. Measurement of the Vacuum Quality will be taken for many months prior to launch during the magnet and experiment checkout and testing. This data will include vacuum measurements during several long air transports.

14.5 Secondary Structure

The strength verification of the electronics boxes, most secondary components, and miscellaneous electronic devices shall be by analysis only, using the factors of safety described in Section 6 and Appendix A. The analysis only option has been and will continue to be coordinated with the SWG. Some components or their mounting fixtures may require strength testing. This will be addressed on a case-by-case basis. Strength testing could consist of sine-burst testing, static testing, interface stiffness testing, etc.

15. Environmental Testing

The random vibration testing levels and requirements are the same as those used for the STS-91 flight.

It is expected that the vibration transmitted through the primary structure to the experiment components will be smaller than Minimum Workmanship Levels (MWL). For mission success it is recommended that vibration testing of the individual electronics components shall be performed to MWL. A summary of these tests can be found in Section 17.

An acoustic random vibration test will be performed on the STA VC and CMR. The test will be performed to the maximum acoustic levels expected in the Space Shuttle cargo bay as defined in NSTS-21000-IDD-ISS Section 4.1.1.5 [15]. This test will be used to qualify the cryogenic system components and the Vacuum Case o-ring seal design.

Acoustic testing of individual AMS-02 experiment components is not planned, but specific components referenced in Section 17 will be assessed for acoustic susceptibility. If it is determined that a component is susceptible to acoustic excitation an acceptable test plan will be negotiated with the Structures Working Group.

The environmental testing that will be performed is detailed in Section 17 for the individual components. As indicated in Section 13.1, a flight level acoustic test is planned for the STA VC and CMR. The purpose of this test will be to qualify the cryogenic system components and the Vacuum Case o-ring seal design.

Tables 15-1 and 15-2 list the Maximum Expected Flight Level (MEFL) and MWL test environments, respectively.

Table 15-1: Maximum Expected Flight Levels for AMS-02

X Axis	20-58 Hz	0.0025 g^2/Hz
	58-125 Hz	+9 dB/Octave
	125-300 Hz	0.025 g^2/Hz
	300-900 Hz	-9 dB/Octave
	900-2000 Hz	0.001 g^2/Hz
	Overall = 3.1 Grms	
Y Axis	20-90 Hz	0.008 g^2/Hz
	90-100 Hz	+9 dB/Octave
	100-300 Hz	0.01 g^2/Hz
	300-650 Hz	-9 dB/Octave
	650-2000 Hz	0.001 g^2/Hz
	Overall = 2.3 Grms	
Z Axis	20-45 Hz	0.009 g^2/Hz
	45-125 Hz	+3 dB/Octave
	125-300 Hz	0.025 g^2/Hz
	300-900 Hz	-9 dB/Octave
	900-2000 Hz	0.001 g^2/Hz
	Overall = 3.2 Grms	

Note: MEFL Test duration: 60 seconds per axis

Table 15-2: Minimum Workmanship Levels for the Alpha Magnetic Spectrometer - 02

All Axes	20 Hz	0.01 g^2/Hz
	20-80 Hz	+3 dB/Octave
	80-500 Hz	0.04 g^2/Hz
	500-2000 Hz	-3 dB/Octave
	2000 Hz	0.01 g^2/Hz
	Overall = 6.8 Grms	

Note: MWL Test duration: 60 seconds per axis

16. Loads Analysis

Several loading environments are imposed on the AMS-02 payload during flight. This section describes how the loads will be combined for different components of the payload.

16.1 Primary Structure

The final inertia loads shall be based on results of the Space Shuttle Program VLA. The effects of trunnion misalignment and friction shall be accounted for as described in Sections 17.1.1.1 and 17.1.1.2. The effects of mechanically- and acoustically-induced random vibration shall be neglected for the primary structure. The magnet Vacuum Case must include pressure loads and loads due to any preload on the magnet support system (straps).

The loads application approach that will be used for analysis of the AMS-02 system is outlined in the following sections. The standard uncertainty factors will be used for these analyses (1.5 for preliminary design phase, 1.25 for critical design phase, and 1.1 for the final design phase). All uncertainty factors will be coordinated with the SWG and ISS Structures Team.

16.1.1 Non-Linear Static Load Factor Analysis-Launch Configuration

1) Apply initial preload to straps. The initial preload is defined as the minimum mechanical preload required that prevents a no-load condition on any single strap during Launch/Landing Cycles. The Vacuum Case is not attached to the USS-02 during this operation.
2) Apply 1g along the -Z-axis in order to account for gravity during ground ops. The Vacuum Case is not attached to the USS-02 at this point.
3) Attach the Vacuum Case to the USS-02 and apply the vacuum load of 14.7psi (1 atm).
4) Cool the cold mass to 2 degrees Kelvin while leaving the Vacuum Case at 300 degrees Kelvin, thus applying the remainder of the preload to the straps. Attach the LTOF horizontal struts to the USS-02 lower VC joint.
5) Apply the trunnion misalignment loads and change the gravity load from the -Z-axis to the +X-axis to simulate the AMS-02 payload attached to the orbiter at the launch pad.
6) Apply all the different combinations of static loads to the entire payload.

16.1.2 Non-Linear Static Load Factor Analysis-Landing Configuration

1) Apply initial preload to straps. The initial preload is defined as the minimum mechanical preload required that prevents a no-load condition on any single strap during Launch/Landing Cycles. The Vacuum Case is not attached to the USS-02 during this operation.
2) Attach the Vacuum Case to the USS-02 and apply the vacuum load of 14.7psi (1 atm).
3) Cool the cold mass to 2 degrees Kelvin while leaving the Vacuum Case at 300 degrees Kelvin, thus applying the remainder of the preload to the straps. Attach the LTOF horizontal struts to the USS-02 lower VC joint.

4) Apply the trunnion misalignment loads.
5) Apply all the different combinations of static loads to the entire payload (effect of gravity is present in these loads).

16.1.3 Pretest Static Test Analysis

1) Apply initial preload to straps. The initial preload is defined as the minimum mechanical preload required that prevents a no-load condition on any single strap during Launch/Landing Cycles. The Vacuum Case is not attached to the USS-02 during this operation.
2) Apply 1g along the -Z-axis in order to account for gravity during ground ops. The Vacuum Case is not attached to the USS-02 at this point.
3) Apply a vacuum to the Vacuum Case.
4) Apply the trunnion misalignment loads.
5) Apply the different combinations of worst case static loads that were chosen from the non-linear liftoff/landing cases.
6) Use this data to determine the best location for strain gauges and then plot the strain vs. load plots for use during the testing.

16.1.4 Non-Linear Modal Analysis

1) Apply Initial Preload to the Straps.
2) Apply 1g in the vertical direction to represent gravity (+X axis for liftoff and -Z axis for landing).
3) Apply a vacuum to the Vacuum Case.
4) Cool the cold mass to 2 degrees Kelvin while leaving the Vacuum Case at 300 degrees Kelvin, thus applying the remainder of the preload to the straps.
5) Apply the trunnion misalignment loads.
6) Compute the modes of the system using the converged stiffness matrix for the preloaded condition.

16.1.5 Pretest Analysis For Sine Sweep and Vibration Tests

1) Apply Initial Preload to the Straps.
2) Apply 1g in the vertical direction to simulate gravity (-Z axis for the test in the horizontal configuration and +X axis for the test in the vertical configuration).
2) Apply a vacuum to the Vacuum Case.
3) Cool the cold mass to 2 degrees Kelvin while leaving the VC at 300 degrees Kelvin, thus applying the remainder of the preload to the straps.
4) Attach the Vacuum Case to the Vacuum Case test fixture (VCTF)
5) Apply transient loads at the shaker interface of the VCTF.

16.1.6 Pretest Analysis for the AMS Modal Test

1) Apply initial preload to the Straps.
2) Apply 1g in the vertical direction to simulate gravity (applied along -Z axis for the horizontal test configuration).
3) Apply a vacuum to the Vacuum Case.
4) Cool the cold mass to 2 degrees Kelvin while leaving the VC at 300 degrees Kelvin.
5) Perform nonlinear modal analysis with each strap in the region corresponding to the fully preloaded condition.

16.2 Secondary Structure

To determine the combined loads, N_i for launch, the low-frequency transient, A_i, and high-frequency random vibration, R_i, components are superimposed on the steady state, S_i (-1.5 g's in the orbiter X for STS liftoff). The mechanically and/or acoustically induced random vibration loads shall be combined one (1) axis at a time. For landing, $N_i = A_i$ since no significant random environments exist. Note that the uncertainty factor, *UF*, will not be applied to the ICD random vibration loads. The standard UFs of 1.5 for Preliminary Design Phase, 1.25 for Critical Design Phase, and 1.1 for Final Design Phase will be used. The SWG will assign final UFs values for the VLA.

$$N_{x\,\max} = -1.5 + \sqrt{(UF \times A_x + 1.5)^2 + R_x^2},$$

$$N_{x\,\min} = -1.5 - \sqrt{(UF \times A_x + 1.5)^2 + R_x^2},$$

$$N_y = \sqrt{A_y^2 + R_y^2},$$

$$N_z = \sqrt{A_z^2 + R_z^2}$$

These loads shall be compared to the simplified design loads given in Section 4 to ensure that the secondary structural component loads have been enveloped.

The mechanically-induced random vibration loads shall be taken from NSTS-21000-IDD-ISS [15], Table 4.1.1.6.2-1. These loads are duplicated in Table 15.1. These loads shall be applied to the avionics boxes (includes all electronics, power supplies, Cryomagnet avionics box (CAB), etc). Random vibration loads for the TRD, TOFs, Tracker, RICH, TCS radiators and MMOD shields shall be based on the results of the acoustic assessment and flight data described in Section 4 because the random vibrations in these components are most likely acoustically driven.

16.3 ISS On-Orbit

The ISS on-orbit environments that are applicable to AMS-02 can be found in SSP-57003 [9].

17. Payload Components

This section details each payload sub-component. It includes every major sub-system. Sections 1-16 listed above detail the general structural verification requirements. Section 17 is provided for all issues that are not specifically covered by the general requirements in Sections 1-16. For all of the following sections, assume there are no changes to the general requirements unless specifically mentioned below. To provide a simple format for each Experiment Component, Appendix D was added to this document for Revision B and has been updated for Revision C.

All AMS-02 detectors must send the following information to JS, so that JS can compile and present the data to NASA for all safety and design reviews. The safety and design review schedule is shown in Section 18, and the data must be received by JS at least 2 months prior to the review.

Please send:

1. Predicted and actual measured weights
2. Design Drawings
3. Component Materials List
4. Structural Fastener List
5. Stress analysis report with the appropriate factors of safety and load factors (must include a summary table of the minimum margins of safety)
6. Fracture analysis report (if one is available)
7. Details and results of any structural testing that is performed (even if it is for mission success reasons and is not safety related)

17.1 Primary Structures

17.1.1 Unique Support Structure - 02

A description of the USS-02 can be found in Section 3. The factors of safety for the USS-02 can be found in Appendix A. The design loads for the AMS-02 can be found in Section 4.1 and Appendix B. The testing of the overall primary structure is defined in Sections 13 and 14. This testing includes the USS-02.

17.1.1.1 Trunnion Misalignment

The effects of the trunnion misalignment due to manufacturing tolerances will be accounted for in the strength analysis. A Space Shuttle Orbiter misalignment of Zo=0.177 inch between the primary and stabilizer trunnions will be used based on Section 3.3.1.1.2.2 and Figure 3.3.1.1.2.2-1 of NSTS-21000-IDD-ISS [15]. The Orbiter misalignment will be root-sum-squared with the payload misalignment tolerance. A value of 0.200 inch will be used for design.

For on-orbit retrieval of the payload, Section 3.3.1.1.2.2 and Figure 3.3.1.1.2.2-1 of NSTS-21000-IDD-ISS [15] shall apply. The maximum Orbiter on-orbit planarity error

due to thermal deformations is 0.30 inch. The payload planarity error due to on-orbit thermal deformation shall be determined by analysis. The Orbiter and payload planarity errors will be root-sum-squared.

When the Cryomagnet Vacuum Case is installed into the USS-02 on the ground, the Vacuum Case has a differential pressure (1 atm. outside and ~0 atm. inside). Once on-orbit, the differential pressure becomes 0 atm. This means that there is a deflection of the USS-02 that occurs on-orbit.

For all on-orbit calculations, the manufacturing tolerances, the thermal deformations, and the pressure deformations will be root-sum-squared to determine the total trunnion misalignment.

17.1.1.2 Trunnion Friction

The effects of friction on the trunnion locations will be assessed based on Figures 4.1.1.1-1 and 4.1.1.1-2 of NSTS-21000-IDD-ISS [15]. The friction loads will be applied to the attach points and the nearby structure (this includes the trunnion blocks as was done for AMS-01) will be assessed for the additional loading. For liftoff, friction coefficient values for the Y_o, longeron and Z_o keel loads will be taken as 0.10; the X_o friction values for the longeron and keel will be between 0.10 and 0.12, depending on the normal load. For landing, a temperature of -60° Fahrenheit will be used to determine the coefficient of friction. The cold case landing temperature will be updated based on thermal analysis.

17.1.1.3 Equipment Required for STS Removal and Retrieval

The AMS-02 will require scuff plates, grapple fixtures, and a Remotely Operated Electrical Umbilical (ROEU. The load and verification requirements for all STS related deploy and retrieval equipment that is described in NSTS-21000-IDD-ISS will apply. This includes the frequency requirement defined in Section 14.4.5.2 of NSTS-21000-IDD-ISS which states “The major structural vibration frequencies of a payload and its grapple fixture interface, when cantilevered from the grapple fixture, shall be greater than or equal to 0.2 Hz for payloads weighing less than or equal to 35K lbs. Computation of the frequencies shall exclude the grapple fixture.” This requirement will be verified by analysis.

17.1.1.4 Equipment Required for ISS Installation and Removal

The AMS-02 will require a Power and Video Grapple Fixture (PVGF) and a Payload Attach System (PAS) for deployment to the ISS. The PAS verification requirements are described in detail in section 17.2.10. The verification requirements for the AMS-02 payload during SSRMS translation and berthing operations described in SSP 57003 shall apply. This includes the frequency requirement described in SSP 57003, Table 3.7.3-1. This requirement will be verified by analysis. The structure shall also be shown to remain within the Attached Payload Operational envelope described in SSP 57003, Table 3.1.3.1.1.1-1. The requirement will be verified by drawing and CAD model review.

17.1.2 Cryogenic Magnet Vacuum Case

A description of the Cryomagnet Vacuum Case can be found in Section 3. The factors of safety for the VC can be found in Appendix A. The design loads for the AMS-02 can be found in Section 4.1 and Appendix B. The current safety assessments concerning VC leakage can be found in Appendix C.

The Cryomagnet Vacuum Case must meet the certification requirements defined in Section 14.4.

<u>The following analyses will be performed on the Vacuum Case:</u>

1. AMS-02 will perform numerous stress and buckling analyses for the VC. All of these analyses will be coordinated with the NASA SWG and will be documented in the AMS-02 stress report. These analyses will include:
    a. Non-linear NASTRAN buckling analysis
    b. Point-by-point buckling analysis
    c. BOSOR and PANDA buckling analysis
    d. NASTRAN stress analysis
    e. NASTRAN modal analysis
    f. NASTRAN non-linear transient analysis
    g. NASGRO fracture and fatigue analysis
2. A non-linear buckling analysis including imperfections will be done to determine the buckling load and show the margins of safety are positive. The analysis will assess that the VC design will have adequate margins of safety to show that the buckling failure is not catastrophic.

The Cryomagnet Vacuum Case STA will be used during the static and modal testing of the AMS-02 payload (Sections 13 and 14). The static test of the entire payload is to be to 1.1 x limit load with a FEM correlation to 1.4 x limit load. As discussed in Section 14, AMS-02 will assess the feasibility of performing one of the full payload static test cases so that the STA VC reaches 1.4 x limit load. This will only be done if the USS-02 does not exceed 1.1 x limit load during this sub-case. Strain and displacement measurements will be used to correlate the FEM. Vacuum will be applied to the Vacuum Case during all static and modal testing of the all-up payload. The modal test of the all-up configuration and the high level sine sweep test (Section 14.4) will include sufficient instrumentation to dynamically correlate the FEM.

If the helium tank relief device vents into the Vacuum Case, then the Vacuum Case relief device must be two-fault tolerant and capable of venting at a rate to release full flow without Vacuum Case rupture. The current design includes a tube that pipes the helium tank relief device outside of the VC.

Both the flight VC and the STA VC will go through a proof pressure test to the limits shown in Appendix A. Both VCs will also be evacuated to ensure a leak tight design. This test is mission success related and does not pose a safety concern.

17.1.3 Superconducting Cryogenic Magnet

It is anticipated that most of the Cryomagnet and any Cryomagnet related special test equipment (STE) will be developed and manufactured by ETH in Zurich through a sub-contract in England. All of the design and analysis technical support is provided by ETH. The system consists of a large toroidal superconducting electro-magnet, a large toroidal Super Fluid Helium (SFHe) tank (Section 17.2.1), a cryogenic magnet support system (Section 17.1.4), and a cryogenic system (non-structural).

The magnet, when fully charged (only occurs on-orbit and during ground processing) produces huge (~150-200 metric tons) loads that are completely contained within the magnet structure. Very little, if any, load is transferred out of the magnet through the magnet support system to the USS-02 or Vacuum Case. The inertia loads that apply to the magnet for launch/landing/on-orbit can be found in Appendix B. The factors of safety that apply to the magnet can be found in Appendix A. The magnet is designed to run at 1.0 x limit load for several years. The design of the magnet support structure will be driven by a deflection criterion. If the magnet support structure has even minor deflections, the magnet could quench and will not function. In fact, at limit load, the magnet structure margins of safety will be very high. According to a reference [34] provided by the magnet developer, the magnet will only function properly if all of the conductors remain in the superconducting state. If any part of the windings goes 'normal' (resistive), the current passing through it will cause the wire to heat up. This heating will propagate through the nearby coils and can only be stopped if the disturbance is small. If the disturbance is not small, the heat will spread to other parts of the coil and all the stored energy in the magnet is dissipated, evaporating the liquid helium in portions of the cryogenic system very quickly and often warming up the magnet. This process is called a 'quench'. Because of this, the magnet testing will be divided into two separate parts. All of the testing for the magnet has been coordinated with the SWG and the ISS Structures Team.

For the first test, the magnet will be cooled to a low temperature (~1.8 degrees K) that represents the flight configuration and will be run up past full current using a ground based power supply. The loads will then equal 1.1 x Limit Load. The magnet flight current source will be such that the magnet will never exceed the full design current level; therefore, the magnet forces will never exceed 1.0 x Limit Load. Displacement measurements will be correlated with a Finite Element Model (FEM). During this test, measurement will be made of the magnet support system to ensure that there is no load transfer from the magnetic forces to the VC and USS-02.

For the second test, a magnet/cold-mass replica will be used during the all-up modal and static testing (Sections 13 and 14) in the USS-02. The mass replica will be dynamically similar to the flight magnet/cold-mass. The magnet/cold-mass acts as a rigid body suspended within the Vacuum Case. The dynamic characteristics will be

determined mainly by the cryogenic magnet support system described in Section 17.1.4. The flight configuration will be closely simulated during the all-up modal and static testing. Although all efforts will be made, it may not be possible to load the cold mass (including the Cryo-magnet support system) to 1.1 x limit load. In any case, the cold-mass mass replica will be loaded to at least 1.0 x limit load, and the cold-mass mass replica will be instrumented to ensure that an FEM correlation can be performed.

17.1.4 Cryogenic Magnet Support System

The magnet and cryogenic system (cold mass) will be supported to the cryogenic magnet Vacuum Case by means of 16 non-linear composite straps. The straps are required to minimize the heat conduction from the warm Vacuum Case (~300 degrees K) to the cold mass (~1.8 degrees K). There are currently two different but very similar strap designs that will be utilized. The strap systems will be developed by ETH and its subcontractors who have extensive experience in designing and manufacturing strap systems. Some of the major tests will be conducted by NASA/LM to ensure an independent check of the system. The following requirements, which have been coordinated with the NASA SWG and NASA/EM2, apply:

<u>Straps</u>

a) Will use minimum design factors of safety (FS) of 1.4 (ultimate) and 1.2 (yield).
b) Will acceptance test each flight strap to 1.2 x limit load with no detrimental deformation. Tests will include maximum preload and loads will be factored to account for cryogenic temperature at magnet end (cold end) and maximum expected temperature at vacuum vessel end (warm end).
c) Will provide all data on similar strap systems for ground operations (max preload, creep (data has been provided to SWG in reference 41), fatigue, notch sensitivity testing, thermal cycling testing, and high and low temperature testing and material properties).
d) Space Cryomagnetics Ltd. completed an analysis for creep of the strap system [41]. The calculations are based on test data from other composite strap systems. The system is designed with a fairly small strap preload (~2000 lbs). There is additional load if the magnet is on the ground under a 1 G load. With this preload, the expected creep is only 16.8 microns for 1 year of ground operations and 3 years of on-orbit operations. This is a negligible amount, and only reduces the on-orbit preload by 1.6 lbs. The strap system will maintain tension with adequate margin even when the reduction of preload due to creep is included. For this reason, no additional creep testing will be performed on the strap system.
e) Will ensure by analysis that straps do not see bending or torsion.
f) Will provide test data on the temperature effects on the straps. If no test data is available, the appropriate testing will be performed.
g) Strap preload will be designed to prevent the straps from seeing compressive loading (even in the event that both ends of the strap are warm). Current analysis shows that all of the strap assemblies maintain tension with adequate margin under all loading conditions.

h) If no test data is already available, several (30-40) straps or strap samples will be tested during the development phase. To date, 66 samples have been static or fatigue tested [42].
i) The strap pre-tensioning technique will be coordinated with NASA to ensure that all straps are pre-tensioned to the same amount within a reasonable tolerance.

Fittings and Fasteners

a) NASA will provide or lot test (per JSC Fastener Integrity Program) all critical fasteners. (Pins and bolts for end fittings).
b) Fittings will be considered fracture critical and will have Non Destructive Evaluation (NDE) performed.
c) Will use minimum factors of safety of 1.4 (ultimate) and 1.2 (yield) assuming that the fittings are metallic. (This assumes the strap/fitting test to failure that is described in the next section.)
d) Metallic end fittings will have a fracture analysis performed with a scatter factor of 4.0 with appropriate temperature corrections and will show that the crack growth is stable.

Strap and Fitting System

a) Will test a strap system with two end fittings/fasteners to failure in both the warm and cold condition. Strap system and end fittings/fasteners will be identical to flight configuration. Follow-on tests based on the results of the first test will be performed as required.
b) Ground transportation loads will be compared to flight loads and enveloped in tests.
c) All test results will be reported to NASA at safety and design reviews.
d) Fatigue due to cycling, dynamic, and thermal loads will be addressed in the material testing and inspection process. Two straps will be fatigue tested to the levels defined in section 8 of this document. A pre and post test static test to 1.0 x limit load will help to determine if there was any damage during the testing. SWG agrees that this test is not required since each strap will undergo test to 1.2 x limit load, but the testing is being performed to provide additional data for this system. The fatigue testing will be done with one end at 77 K and the other end at 300 K. The material properties at 77 K are only a few percent different than those at 1.8 K.
e) Temperature correction factor for testing the strap assembly with end fittings will be considered.
f) Shock (impact) loading at cryogenic temperatures will be taken into account in the design of the strap assembly.
g) A 1-D dynamic test has been performed with two identical warm strap systems and a sizable mass (489lbs). The mass was placed between the straps and supported by linear bearings. The straps were preloaded, and dynamic excitations applied to the system. This test aids correlation of the nonlinear dynamic characteristics of the strap systems, including damping.
h) The full scale sine sweep test will be performed at the appropriate flight temperatures, so any data associated with temperature differentials can be gathered during this subsequent testing.

Table 17-1 provides a summary of the testing and environmental loads that the 36 strap systems will see during their lifetime. Analysis of these systems will include all expected environments. For example, the STA Straps could see flight loads because they are the backup flight system. The analysis includes this, but the Table 17-1 only shows the expected tests and environmental loads. Note that numerous component level tests performed during strap system development are not shown in the table because these tests do not include any flight or STA components.

Table 17-1: Strap Testing & Environmental Loads Matrix

	STA Straps	**Flight Straps**	**Test Straps**	**Spare Straps**
# of Straps	16	16	2	2
Static Tests	1.2 x limit load	1.2 x limit load	- 1.0 x limit load (before fatigue) - 1.0 x limit load (after fatigue) - 1 warm strap to failure (300 K) - 1 cold strap to failure (4 K)	1.2 x limit load
Fatigue Tests			2 straps to spectra in Section 8 with scatter factor of 1 (not required for safety)	
Dynamic Tests	-High Level Sine Sweep Test with STA VC and CMR -Acoustic Test		- Simple dynamic test with two straps and mass to characterize overall system dynamics (performed in 3 tests)	
Transportation	~71 Hours of Truck transportation ~40 Hours of Air Transportation with 4 takeoffs & landings	~100 Hours of Truck Transportation ~33 Hours of Air Transportation with 4 takeoffs and landings		
Flight/On-orbit		-1 liftoff -1 landing -3 years on-orbit (5 years used for analysis)		

17.2 Secondary Structures

17.2.1 Cryogenic Magnet Helium Tank

The cryogenic magnet system requires a large (~2600 liters) toroidal SFHe tank. This tank will be developed by ETH through a sub-contract. The factors of safety related to the helium tank can be found in Appendix A. Two different tanks will be built. The first STA tank will be used with the STA VC for many of the dewar verification tests. It will also prove the manufacturing and assembly techniques prior to the manufacturing and assembly of the flight tank. The second tank will be the flight tank. The load factors associated with the helium tank can be found in Appendix B. The current safety assessments for venting, both nominal and emergency, can be found in Appendix C. Appendix E has been provided to summarize the pressure system hardware. The following testing will be performed:

A proof pressure test to 1.1 x Maximum Design Pressure (MDP) will be performed on the Helium Tank. To ensure that the vessel is leak tight, measurements will be taken during the proof pressure test to ensure the integrity of the system. This is a mission success issue only and is not required for safety. This testing meets the requirements specified in SSP-30559B [29].

No static loads testing will be performed on the helium tank since a high factor of safety shown in Appendix A will be used for design.

Because the vessel meets the requirements in NSTS 1700.7B ISS Addendum [14] as a pressure vessel, all welds will have NDE performed after the proof pressure testing. All welded interfaces will meet the requirements defined in Section 12.4 and 12.5. The pressure vessel will have a two-fault tolerant relief device to prevent the pressure from exceeding the maximum design pressure (MDP) of the system per NSTS 1700.7B ISS Addendum [14].

The helium tank contains a very large amount of super-fluid helium. There is some concern that the sloshing of the helium could pose a structural concern for AMS-02. There are three main issues related to the sloshing of the helium: 1) the sloshing could add loads to the tank that will be addressed in the overall design of the tank, 2) the sloshing could change the dynamics of the overall payload for landing, and 3) the sloshing could change the dynamics of the overall payload for the on-orbit (ISS) configuration. As to issue 1, the maximum expected load due to the sloshing will be addressed and added to the inertia and pressure loading that is already applied to the tank. NASA references [1,27] have already been found, and research continues on this issue. As to issue 2, it may be possible to envelope the worst possible effect of the sloshing by adjusting the linear finite element model. Work continues on this issue. As to issue 3, an article in the *Journal of Applied Mechanics* [27] shows that the amount of liquid taking part in low-g sloshing is less than that for high-g sloshing. This is a reasonable result because, for the same tank size and the same total amount of contained liquid, more of the liquid is in contact with the walls under low-g conditions; thus more of the liquid must follow the motion of the tank. That is, more of the liquid must be assigned to the rigidly attached mass in the mechanical model and less to the sloshing masses. Experimental tests have verified the force response of the proposed

mechanical model with about the same degree of accuracy as similar models for high-g sloshing [27]. This means that issue 3 will be automatically be addressed when issue 2 is addressed. In addition, two new resources have been identified [43,44]. These sources detail the mathematical equations governing low gravity sloshing of superfluid helium dewars. The main concern for sloshing on-orbit has been when the AMS-02 is attached to the SSRMS during installation. At this point in the assembly process, the AMS-02 dewar is 90-95% full and the effect of sloshing is even further minimized because only a very small percentage of the fluid sloshes. In addition, the Superfluid Helium tank has employed baffles in the design by welding the rib stiffeners inside the tank. As the fluid begins to slosh up the sides of the tank it is impeded by the ribs and the sloshing effects are reduced.

LMSO has performed an analysis to determine the worst case slosh loads that should be applied to the system for landing. These loads are detailed in Reference 36 and have been added to the loads of the helium tank and magnet support system that are shown in Appendix B.

AMS-02 plans on performing a high level sine-sweep test and a vibration test of the system with helium in the STA helium tank. AMS-02 will assess the feasibility of performing sloshing test of this configuration.

There have been numerous concerns raised about the emergency venting of the helium tank. AMS-02 is currently working with NASA EP, the Space Shuttle Program Office, the Payload Safety Review Panel to ensure that all of the concerns are addressed. As part of this cooperation, several new tests have been added to the AMS-02 program. The acoustic test that was mentioned in section 15 is one of these tests. This acoustic vibration test will verify that the double o-ring design of the bolted interfaces on the VC do not leak even when subjected to flight random vibration levels. The static test of the overall payload will also show that there is no leakage through these o-rings under a static loads and deflections. Several small scale vent tests have also been added to the overall testing plans. These vent tests will verify the emergency vent rates that we expect to see in the event of a blown rupture disk on the Helium tank. The data from these tests will be used to ‘correlate’ the venting analyses AMS-02 and shuttle integration are currently using to assess Orbiter over-pressurization and thermal considerations. The current safety assessments for the Helium tank venting assessments have been added to this report in Appendix C. These assessments provide the current summary of the venting analyses and failure scenarios.

17.2.2 Transition Radiation Detector and Gas Re-supply System (TRD)

The TRD will be developed by Aachen University in Aachen, Germany and the Massachusetts Institute of Technology (MIT). The TRD will be composed of several layers of detectors that will contain Xenon (Xe) gas mixed with Carbon Dioxide (CO_2) gas. The TRD will be located above the Cryomagnet and upper Time of Flight (TOF), and will be attached directly to the USS-02. The AMS-02 experiment team will provide all of the flight hardware and a full scale TRD STA if required for structural testing of the entire payload configuration.

If the analytically predicted first mode is below 50 Hz, a sine sweep, 'smart-hammer', or modal test will be performed to verify the significant natural frequencies of the component. All verification by analysis alone will be coordinated with the SWG. For mission success, it is recommended that a random vibration test to MEFL or MWL be performed. Currently, analysis of the TRD shows that the first mode is greater that 50 Hz. Analysis of the TRD gas supply system also shows the first mode to be greater than 50 Hz and it has been verified by a sine sweep test.

The TRD will require a gas supply, re-circulation, filtration, mixing, and monitoring system to supply the Xenon and CO_2. This gas re-supply system will be mounted on the USS-02 and tubing will be used to supply the gas to the TRD. The gas supply tubing system will meet the proof-pressure test requirements defined in Appendix A. The system will be composed of separate Xenon and CO_2 gas tanks. Appendix E has been provided to summarize the pressure system hardware.

The Xe tank is a composite over-wrapped stainless steel tank that is designed and built by Arde, Inc. This tank is the same one that is used on the Plasma Contactor Unit for ISS. It has a maximum design pressure of 3000 psid with a minimum temperature rating of –60 F and a maximum temperature rating of 150 F. The normal operating pressure is 1550 psid. The normal operating temperature is 77 F. The tank was designed with a proof test factor of 1.5 x MDP and a minimum burst factor of 3.1 x MDP. It has an outside diameter of 15.37 inches and a volume of 1680 cubic inches. It can carry up to 109 lbs of Xe and has been tested to 8.9 Grms at 0.08 g^2/Hz. The stress and fracture analysis for these tanks can be found in Reference [2]. The dynamics, including sloshing, can be found in Reference [1]. The manufacturer has also provided a similarity qualification report in Reference [43].

The CO_2 tank is a composite over-wrapped stainless steel tank that is also designed and built by Arde, Inc. This tank was designed for use on the X-33 vehicle and has a maximum design pressure of 3200 psid. This tank operates at 77 F, but has a minimum operating temperature of –100 F and a maximum operating temperature of 300 F. The normal operating pressure is 1100 psid. The tank is designed with a proof test factor of 1.5 x MDP and a minimum burst factor of 2.0 x MDP. The outside diameter is 12.42 inches and it has a volume of 813 cubic inches. The tank weighs 9.5 lbs and it can hold a maximum of 9 lbs of CO_2. A vibration test has been performed to 8.9 Grms at 0.07 g^2/Hz axially and 4.5 Grms at 0.02 g^2/Hz laterally. The manufacturer has provided a similarity qualification report in Reference [44].

The small mixing tank will also be manufactured by Arde, Inc. It will have a nominal operating pressure of 200 psid and a normal operating temperature of 77 F. A proof test factor of 2.25 x MDP and a minimum burst factor of 4.0 x MDP will be used. The volume will be ~2 liters.

The fittings and connections in the gas system include stainless steel tubing, welded joints, and numerous gas manifolds. The stainless steel tubing will range from 3 – 6 mm outer diameter. Connections will be made with welded joints wherever possible (as an alternate, metal or viton o-ring sealed fitting could be used). The connections between the gas manifolds and the TRD segments are made with 1 mm inner diameter Polyether Ethyl Ketone (PEEK) tubing and metal connectors.

In addition to the qualification vibration tests that were performed for the individual tanks, a vibration test has been performed for the S-box structure for mission success. The S-box test article included the CO_2 tank, a mass simulator of the Xenon tank, the mixing tank and valves, and the mounting brackets and support structure for each tank. The test was performed to the Minimum Workmanship Vibration Levels. No structural failures or other inadequacies occurred during the test and subsequent functional tests verified that the system continued to perform properly. The results from this test have been documented in a report by Corrado Gargiulo of INFN Rome.

The TRD straw tubes have a maximum design pressure of 29.4 psid. The minimum and maximum design temperatures are -20C and 40C. The relief valves will be set to 29.4 psia. The normal operating pressure is 14.7 to 17.4 psid on orbit and 17.6 to 20.4 psid on the ground. The normal operating temperature is 77 F within +/- 1 C delta temperature throughout the entire TRD. The proof test factor of 1.5 x MDP will be employed and a minimum burst factor > or = 2.0 x MDP will be employed. Each of the 41 separate segments contain ~430 cubic inches of gas. The gas mixture is circulated through these tubes in a continuous loop. Each manifold is connected by pressure controlled isolation valves at the inlet and outlet. The density and purity of the gas mixture is monitored and corrected.

The TRD octagon panels may be susceptible to acoustic excitation. Therefore, an acoustic analysis of the TRD will be performed as described in Section 4.5.

17.2.3 Time of Flight System (TOF)

The TOF system is manufactured by INFN in Bologna, Italy. The design of the TOFs will be very similar to the design for the STS-91 flight. This system will be mounted directly to the USS-02. There will be one TOF above the tracker and one below. The upper TOF will share the support structure with the TRD. The TOFs will use the same type of scintillator panels as the STS-91 flight. However the photo multipliers will have to be relocated to minimize the effect of the higher magnetic field on them. The AMS-02 experimenters will provide all the flight hardware and a full scale TOF STA if required for structural testing of the entire payload configuration.

The only glass identified on the TOF is in the photo-multiplier assembly for the scintillators. Each glass lens is approximately 18 mm in diameter (the diameter of a dime). All of the described hardware flew on STS-91 with no anomalies.

If the analytically predicted first mode is below 50 Hz, a sine sweep, ‘smart-hammer’, or modal test will be performed to verify the significant natural frequencies of the component. All verification by analysis alone will be coordinated with the SWG. For mission success, it is recommended that a random vibration test to MEFL or MWL be performed.

Currently, analysis shows that the first mode of the upper time-of-flight structure is approximately 50.1 Hz.

The TOF panels may be susceptible to acoustic excitation. Therefore, an acoustic analysis of the TOF will be performed as described in Section 4.5.

17.2.4 Tracker

The tracker is manufactured by INFN Perugia, Italy in collaboration with University of Geneva in Switzerland and Aachen University in Germany. The tracker system that flew on STS-91 will be modified for AMS-02. This system will mount directly to the magnet Vacuum Case. The tracker system is now composed of only 5 honeycomb planes as opposed to the 6 planes that were flown on STS-91. The 3 inner planes will be populated with silicon trackers on both the top and the bottom of the plane. This is a significant change in the design compared to STS-91. This means that although there will now only be 5 planes of honeycomb, there will be 8 planes of silicon detectors. The AMS-02 experimenters will provide all of the flight hardware and full scale Tracker STA if required for structural testing of the entire payload configuration.

If the analytically predicted first mode is below 50 Hz, a sine sweep, ‘smart-hammer’, or modal test will be performed to verify the significant natural frequencies of the component. All verification by analysis alone will be coordinated with the SWG. For mission success, it is recommended that a random vibration test to MEFL or MWL be performed.

The tracker panels may be susceptible to acoustic excitation. Therefore, an acoustic analysis of the Tracker will be performed as described in Section 4.5.

17.2.5 Ring Imaging Cherenkov Counter (RICH)

The RICH will be developed and manufactured by INFN in Bologna, Italy in collaboration with various universities/laboratories in Spain, Portugal, and France. The RICH will be mounted directly to the USS-02. The AMS-02 experimenters will provide a full scale RICH STA if it is determined that it is necessary for structural testing of the entire payload configuration.

The RICH includes a conical reflector that is completely contained within the RICH structure. All safety related issues will be addressed during the safety review process.

The factors of safety can be found in Appendix A, and the load factors can be found in Appendix B.

If the analytically-predicted first mode is below 50 Hz, a sine sweep, ‘smart-hammer’, or modal test will be performed to verify the significant natural frequencies of the component. All verification by analysis alone will be coordinated with the SWG. For

mission success, it is recommended that a random vibration test to MEFL or MWL be performed.

The RICH may be susceptible to acoustic excitation. Therefore, an acoustic analysis of the RICH will be performed as described in Section 4.5.

17.2.6 Electromagnetic Calorimeter

The ECAL and any ECAL related STE will be developed and manufactured INFN in Pisa, Italy and University of Siena, Italy in collaboration with the Institute of High Energy Physics (IHEP – Beijing, China) and LAPP in Annecy, France. The ECAL will be located at the bottom of the AMS-02 instrument stack. The ECAL, although extremely heavy, is much smaller than the other components. This provides for unique interface issues related to this detector that will be mounted directly to the USS-02. The AMS-02 experimenters will provide a full scale ECAL STA if it is determined that it is necessary for structural testing of the entire payload configuration. The factors of safety can be found in Appendix A, and the load factors can be found in Appendix B.

In order to reduce the ultimate factor of safety on the ECAL from 2.0 as was originally defined in the basic revision of this document to 1.4, the following testing was determined to be necessary:

- A full-scale prototype unit of the ECAL will be manufactured for testing purposes.
- Perform sine sweep test (0.25 G from 10-300 Hz, scan rate = 2 oct/min) on the entire prototype assembly.
- Perform random vibration testing on the entire prototype assembly to the levels defined in Table 15.1 (MEFL).
- Perform sine sweep test on the entire prototype assembly and verify that there is no change when compared to the first sine sweep test.
- Perform sine burst test. Test will be performed to 1.2 x design limit load.
- Perform final sine sweep test on the entire prototype assembly and verify that there is no change when compared to the first and second sine sweep tests.

These tests were performed in January 2003. Once the test results are reviewed with the SWG, appropriate factors of safety for ultimate and yield will be defined. The support structure for the ECAL must show no detrimental deformation at yield and no failure at ultimate.

The flight ECAL will be verified by similarity to the prototype unit, so the prototype unit must be statically and dynamically similar to the prototype unit. The flight ECAL should have a sine sweep test to show similarity to the prototype unit and confirm the natural frequencies.

Note that this assumes that the support structure is made of an aluminum honeycomb. If the structure is changed to a graphite-epoxy composite, the flight unit must have a static test to 1.2 x limit load.

All of this testing was coordinated with a member of the NASA Structures Working Group in October 1999.

17.2.7 Anti-Coincidence Counter

The Anti-Coincidence Counter (ACC) will be designed, analyzed, and manufactured by Aachen and will mount near the Inner Cylinder of the magnet Vacuum Case. The same ACC structure that flew on STS-91 will be reused for AMS-02. The only changes that will be made are to the attach fitting and the detectors, both of which will be new. The factors of safety can be found in Appendix A, and the load factors can be found in Appendix B.

The first mode of the ACC is above 50 Hz as documented for STS-91 [8]. All verification by analysis alone will be coordinated with the SWG. For mission success, it is recommended that a random vibration test to MEFL or MWL be performed.

17.2.8 Thermal Control System

The Thermal Control System (TCS) for AMS-02 will be quite substantial. Most likely, an active cooling system will be required. This will consist of several large radiator panels, TCS fluid tubing, and possibly fluid pumps. Most of this hardware will mount directly to the USS-02. Most of the individual components should fit within the load factor requirements described in Section 4.4 for detectors and secondary structure. The radiator panels may be susceptible to acoustic excitation, and therefore will be included in the acoustic analysis described in Section 4.5. The factors of safety for this system are defined in Section 6. This system will be reassessed once it has been better defined. Appendix E has been provided to summarize the pressure system hardware.

If the analytically-predicted first mode of any TCS component is below 50 Hz, a sine sweep, hammer, or modal test will be performed to verify the significant natural frequencies of the component. All verification by analysis alone will be coordinated with the SWG. For mission success, it is recommended that a random vibration test to MEFL or MWL be performed.

17.2.9 Meteoroid and Orbital Debris Shielding

All Meteoroid and Orbital Debris (MOD) shielding will be developed by JS with the help of the NASA/JSC ISS MOD team. The shielding will consist of large flat plates of aluminum and various materials as required. The design will be very similar to the MOD shielding that is used elsewhere on the ISS. The plates will be mounted directly to the USS-02. These plates are fairly light and will use the load factors defined in Section 4.4 for design. An acoustic loads assessment will be performed as described in Section 4.5. The factors of safety are defined in Section 6.

If the analytically-predicted first mode of any MOD shield is below 50 Hz, a sine sweep, hammer, or modal test will be performed to verify the significant natural frequencies of the component. All verification by analysis alone will be coordinated with the SWG.

17.2.10 Payload Attach System and ISS Interface Hardware

All PAS and ISS interface hardware will be developed by JS with the help of the NASA/JSC ISS team. All ISS interface hardware, including the PAS, will be built to the requirements found in SSP-57003 [9] and SSP-57004 [10].

The AMS-02 payload will be lifted out of the Shuttle by the SRMS. The SRMS will hand the payload off to the SSRMS, and the SSRMS will place the payload on the active PAS of the S3 truss segment of ISS. All of the loads for these operations can be found in Section 4. All of the factors of safety for ISS operations can be found in Appendix A.

The PAS hardware on the AMS-02 consists of three guide pins and a capture bar. The Capture Latch Assembly (CLA) on the ISS Truss active PAS will close around the PAS capture bar and pull down with the load defined in SSP-57003 [9] (4900-6430 pounds). This load will hold the payload on the truss for the entire on-orbit duration.

17.2.10.1 PAS Frequency Verification

SSP-57003 [9] requires a first mode of 1.5 Hz when the PAS is rigidly attached at the guide pins (all six degrees of freedom) and capture latch, with verification required to be by analysis only.

17.2.10. 2 PAS Strength and Stiffness Verification

The PAS been tested to verify that the system stiffness meets the requirement of 13,500 lbf/in ± 10% [9]. The test setup used is shown in figure 17-3. A USS simulator was included in the test in order that the AMS-02 payload stiffness could be accounted for. Capture bar load was taken to 6430 lbf. Deflections and stresses on the platform, along with the capture bar deflection, were recovered so that the PAS model may be correlated.

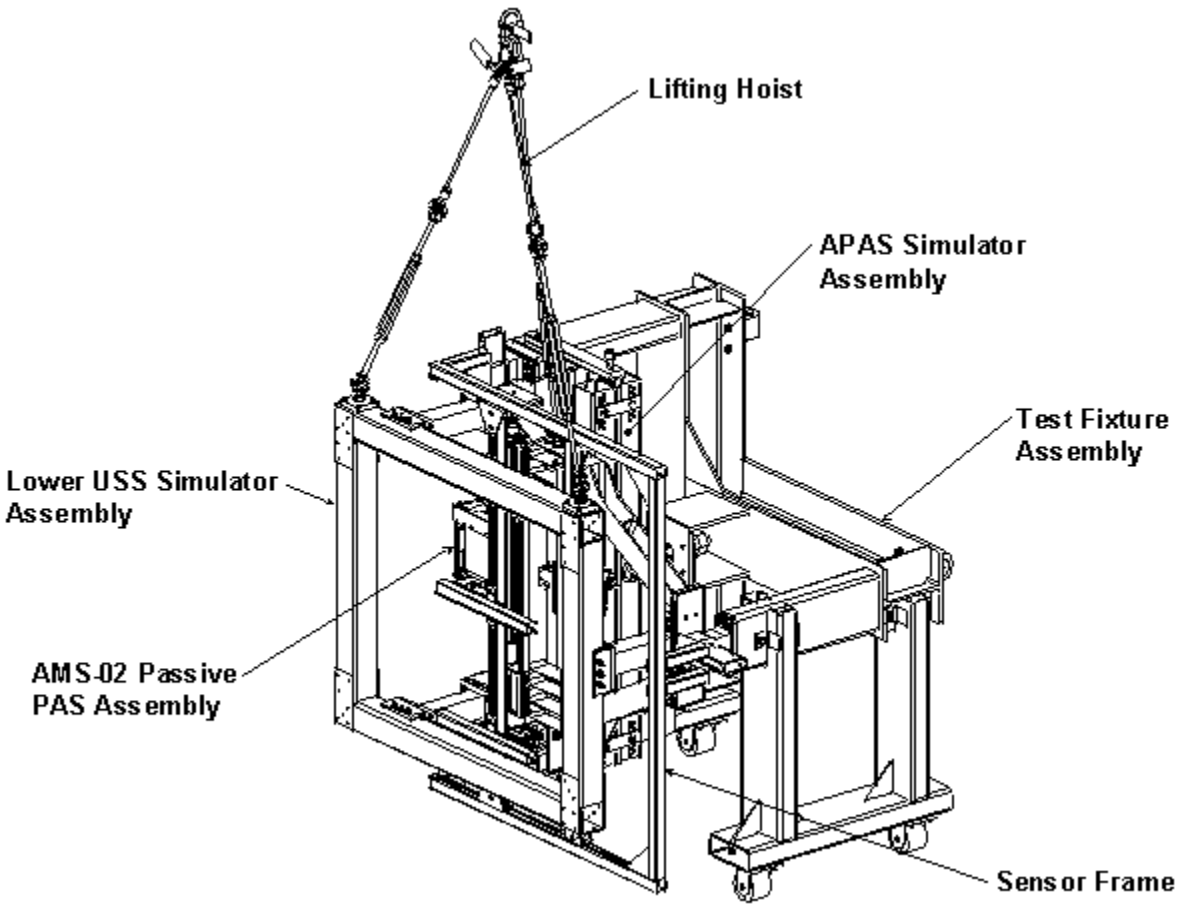

Figure 17-1 PAS Stiffness Test Setup

For strength, the PAS will be verified by analysis, using the correlated model from the stiffness verification test, using factors of safety of 2.0 for ultimate and 1.25 for yield. PAS load cases analyzed will include:

- Liftoff/landing load factors from table 4.1
- Maximum capture bar load combined with the loads given in table 4.2
- On-orbit accelerations from SSP-57003 [9], paragraph 3.5.1.12, as referred to in section 4.2 of this document

18. Deliverables

Lockheed Martin Space Operations shall be responsible for the overall structural analysis of the AMS-02 payload, its detectors, and integration hardware. The detector providers shall submit appropriate analysis reports to JS for review. JS shall review, and if necessary, prepare an independent analysis of each safety critical component and submit a final report to the SWG and the ISS Structures Team.

Table 18-1 lists the structural documentation that is deliverable with approximate dates. Project milestones are also presented. Although other tests may be performed on secondary structures, these tests are performed for mission success reasons. Results will be reported to the SWG and the ISS Structures Teams, but they are not required deliverables.

Table18.1: List of Deliverable Items

Deliverable	SVP Rev. A	SVP Rev. B	SVP Rev. C	Date Complete
Structural Verification Plan (JSC-28792)	10/99	08/00	04/03	Basic 10/99
Design Cycle Coupled Loads Analysis	10/99	11/99	05/03	Basic 11/99
Preliminary Design Review	06/00	06/00	06/00	06/00
Flight Safety Review 0/I	10/00	01/01	01/01	01/01
Ground Safety Review 0/I	01/01	02/02	03/02	03/02
Critical Design Review	05/01	06/02	05/03	05/03
Vibration & Acoustic Pretest Analysis and Test Plan	06/01	10/02	7/04	Open
STA VC & CMR High Level Sine Sweep Test	06/01	02-05/03	9/04	Open
STA VC & CMR Acoustic Test	07/02	01-03/03	8/04	Open
Modal Pretest Analysis and Test Plan	02/02	02-06/03	3/05	Open
Modal Test	04/02	06-08/03	04-06/05	Open
Static Pretest Analysis and Test Plan	04/02	05-07/03	03-05/05	Open
Flight Safety Review II	09/01	08/02	10/03	Open
Static Test	06/02	08-09/03	06-08/05	Open
Ground Safety Review II	11/01	03/03	02/04	Open
Static Correlation Report	11/02	11/03	10/05	Open
Modal Correlation Report	11/02	02/04	10/05	Open
Pre-verification Loads Analysis (Verified Math Models)	01/03	03/04	10/05	Open
Stress Report of Primary Structures	11/02	03/04	01/06	Open
Fracture Report of Primary Structures	11/02	03/04	01/06	Open
Flight Safety Review III	11/02	12/03	10/05	Open
Ground Safety Review III	11/03	04/04	11/5	Open
Final Stress Assessment of All Structures	08/03	10/04	06/06	Open
Final Fracture Assessment of All Structures	08/03	10/04	06/05	Open
Verification Analysis Review Summary	08/03	10/04	06/06	Open
Launch to ISS	08/03	12/04	11/06	Open

Appendix A: AMS-02 Factors of Safety

Table A1: USS-02, Cryomagnet, and Pressure Systems Factors of Safety

Item	Sub Component	Load Case	Factor of Safety		Proof Factor	Reference	Event	Comments
			Ultimate	Yield				
Magnet Vacuum Vessel	Inner Cylinder	External Pressure	1.5*MDP	1.10*MDP	1.0*MDP	MIL-STD-1522 A (Space Shuttle) Sect. 5	Liftoff/Landing Ground Ops	Negative delta press. Produces burst on Inner Cylinder.The DP can never be > 1.0 atm. and the proof test can only be done to 1.0*DP
		Mechanical Loads	1.4	1.10	1.10	NSTS14046 E (Space Shuttle) Sect. 5.1.1.1	Liftoff/Landing Ground Ops	
			1.5	1.10		SSP 30559 C (ISS) Table 3.3.1-1	On Orbit	
		External pressure plus Mechanical Loads	1.4*(M)-min. P, if P relieves M 1.4*(M+max. P), if P increases M	1.10*(M)-min. P, if P relieves M 1.1*(M+max. P), if P increases M	1.10*M, 1.0*P	NSTS14046 E Sect. 5.1.1.1, c	Liftoff	Liftoff mech. Loads (M) & Min. delta Pressure (P)
			1.4*(M)-min. P, if P relieves M 1.4*(M+max. P), if P increases M	1.10*(M)-min. P, if P relieves M 1.1*(M+max. P), if P increases M	1.10*M 1.0*P	NSTS14046 E Sect. 5.1.1.1, c	Landing	-Emergency Landing mech. Loads (M) & Min. delta pressure (P) -Normal landing varies depending on whether Helium is present or not
		Internal pressure	1.10*MDP		1.0*MDP		Helium leak inside Vacuum Case (Failure case)	Positive delta pressure produces buckling of Inner Cylinder

Notes: 1) MDP Highest pressure defined by max. relief pressure (Burst discs) at 0.8 atm.(11.76 psi)
2) Reference Appendix C for failure scenarios and credibility of failures.

3) The internal pressure case is critical design case for buckling of the Inner Cylinder and the Conical Flanges.
4) Positive delta pressure is defined as the delta pressure when the pressure inside the Vacuum Case is higher than the outside pressure.

Table A1: USS-02, Cryomagnet, and Pressure Systems Factors of Safety (Cont.)

Item	Sub Component	Load Case	Factor of Safety		Proof Factor	Reference	Event	Comments
			Ultimate	Yield				
Magnet Vacuum Vessel	Outer Cylinder	External Pressure	1.5*MDP	1.10*MDP	1.0*MDP	MIL-STD-1522 A (Space Shuttle) Sect.5	Liftoff/Landing Ground Ops	Negative delta press. Collapses Outer Cylinder
		Mechanical Loads	1.4	1.10	1.10	NSTS14046 E (Space Shuttle) Sect. 5.1.1.1	Liftoff/Landing	
			1.5	1.10		SSP 30559 C (ISS) Table 3.3.1-1	On Orbit	
		Ext. pressure+ Mech. load	1.4*(M+max. P)	1.10*(M+max. P)	1.10*M 1.0*P	NSTS14046 E Sect. 5.1.1.1.c	Liftoff	Liftoff mech. Loads (M) & Max. delta Pressure (P)
			1.4*(M+max. P)	1.10*(M+max. P)	1.10*M 1.0*P	NSTS14046 E Sect. 5.1.1.1	Landing	-Emergency Landing mech. Loads (M) & Max. delta pressure (P) -Normal landing varies depending on whether Helium is present or not
		Internal pressure	1.10*MDP		1.0*MDP		Helium leak inside Vacuum Case (Failure case)	Positive delta pressure produces burst of Outer Cylinder

Notes:
1) MDP Highest pressure defined by max. relief pressure (Burst discs) at 0.8 atm.(11.76 psi)
2) Reference Appendix C for failure scenarios and credibility of failures. Note: No credible failure can be found that would create a positive pressure inside the VC
3) The internal pressure case is critical design case for buckling of the Inner Cylinder and the Conical Flanges.
4) Positive delta pressure is defined as the delta pressure when the pressure inside the Vacuum Case is higher than the outside pressure.

Table A1: USS-02, Cryomagnet, and Pressure Systems Factors of Safety (Cont.)

Item	Sub Component	Load Case	Factor of Safety		Proof Factor	Reference	Event	Comments
			Ultimate	Yield				
Magnet Vacuum Vessel	Upper and Lower Conical Flanges	External Pressure	1.5*MDP	1.10*MDP	1.0*MDP	MIL-STD-1522 A (Space Shuttle) Sect. 5	Liftoff/Landing Ground ops	Negative delta press. Collapses Conical Flanges
		Mechanical loads	1.4	1.10	1.10	NSTS14046E (Space Shuttle) Sect. 5.1.1.1		
			1.5	1.10		SSP30559 C (ISS) Table 3.3.1-1	On Orbit	
		Ext. pressure + Mech. Loads	1.4*(M+max.P)	1.10*(M+max.P)	1.10*M 1.0*P	NSTS14046E (Space Shuttle) Sect. 5.1.1.1	Liftoff	Liftoff Mech. Loads (M) & Max. Delta Pressure (P)
			1.4*(M+max.P)	1.10*(M+max.P)	1.10*M 1.0*P	NSTS14046E (Space Shuttle) Sect. 5.1.1.1	Landing	-Emergency Landing Mech. Loads (M) & Max. Delta Pressure (P). -Normal Landing varies depending on whether helium is present or not.
		Internal pressure	1.10*MDP		1.0*MDP		Helium leak inside Vacuum Case (Failure case)	Positive delta pressure produces buckling of Conical Flanges

Notes:
1) MDP Highest pressure defined by max. relief pressure (Burst discs) at 0.8 atm.(11.76 psi)
2) Reference Appendix C for failure scenarios and credibility of failures. Note: No credible failure can be found that would create a positive pressure inside the VC
3) The internal pressure case is critical design case for buckling of the Inner Cylinder and the Conical Flanges.
4) Positive delta pressure is defined as the delta pressure when the pressure inside the Vacuum Case is higher than the outside pressure.

Table A1: USS-02, Cryomagnet, and Pressure Systems Factors of Safety (Cont.)

Item	Sub component	Load case	Factor of safety		Proof factor	Reference	Event	Comments
			Ultimate	Yield				
Helium tank	Inner Cylinder	Internal pressure	1.5*MDP		1.10*MDP	MIL-STD 1522A, sect.5, (Space Shuttle)	Liftoff/landing with full helium	3 bar press. in He. Tank Zero press. in VC
			1.5*DP		1.10*DP	SSP30559C sect.3.1.9.1 (ISS)	On-Orbit	3 bar press. In He. Tank Zero press. In VC
		Mechanical loads	2.0	1.25	No static test	NSTS14046E sect. 5.1.1.1(Space Shuttle)	Liftoff/landing with full helium	Inertia loads
			2.0	1.25	No static test	SSP30559C sect. 5.1.1.1(ISS)	On orbit	
		Internal. pressure plus Mechanical loads	2.0	1.25	No static test	NSTS14046E sect. 5.1.1.1(Space Shuttle)	Liftoff/landing with full helium	3 bar press. in He. Tank Zero press. in VC and inertia loads
			2.0	1.25	No static test	SSP30559C sect. 5.1.1.1(ISS)	On-Orbit	3 bar press. in He. Tank zero press. in VC and inertia loads
			2.0	1.25	No static test	NSTS14046E sect. 5.1.1.1(Space Shuttle)	Landing empty with no helium	Zero press. in He. Tank and zero press in VC
		Other cases	1.0*P+2.0*M				Landing empty VC breached (micro meteroid strike)	Zero press. in He tank 1 bar press. in VC
			1.0*P				Leak test Ground Ops	Zero press. in He tank 1 bar ext. pressure
			2.0*P				Ground Ops(Hole in VC)	3 bar press. in He tank I bar in VC
	Outer Cylinder and upper and lower domes	Internal pressure	1.5*MDP		1.10*MDP	MIL-STD 1522A, sect.5, (Space Shuttle)	Liftoff/landing with full helium	3 bar press. in He. Tank Zero press. In VC
			1.5*DP		1.10*DP	SSP30559C sect.3.1.9.1 (ISS)	On-Orbit	3 bar press. In He. Tank Zero press. In VC

Table A1: USS-02, Cryomagnet, and Pressure Systems Factors of Safety (Cont.)

Item	Sub component	Load case	Factor of safety		Proof factor	Reference	Event	Comments
			Ultimate	Yield				
Helium tank	Outer Cylinder and upper and lower domes	Mechanical loads	2.0	1.25	No static test	NSTS14046E sect. 5.1.1.1(Space Shuttle)	Liftoff/landing with full helium	Inertia loads
			2.0	1.25	No static test	SSP30559C sect. 5.1.1.1 ISS)	On orbit	
			2.0	1.25	No static test	SSP30559C sect. 5.1.1.1(ISS)	On-Orbit	3 bar press. In He. Tank zero press. In VC and inertia loads
			2.0	1.25	No static test	NSTS14046E sect. 5.1.1.1(Space Shuttle)	Landing empty with no helium	Zero press. In He. Tank and zero press in VC
		Other cases	1.0*P+2.0*M				Landing empty VC breached (micro meteroid strike)	Zero press. In He tank 1 bar press. in VC
			1.0*P				Leak test Ground Ops	Zero press. In He tank and1 bar ext. pressure
			2.0*P				Ground Ops(Hole in VC)	3 bar press. In He. Tank1bar press in VC

Notes:

1) Helium tank is proof tested. Leak-Before-Burst(LBB) analysis is done per sect 3.1.9.1 of SSP30559C, section 4.4.1.1 of SSP 30558 B and MIL-STD-1522A
2) SWG accepted FS=2.0 (ult) and 1.10 (yld) on version NC of SVP.
3) P is pressure loads and M is mechanical loads
4) MDP is the highest pressure defined by maximum relief pressure (burst discs) at 3 bar. (44.1 psi)
5) DP is the maximum delta pressure on-orbit
6) 3 bar pressure cause burst on Outer Cylinder and buckling on Inner Cylinder
7) 1 bar external pressure causes buckling on Outer Cylinder and burst on Inner Cylinder

Table A1: USS-02, Cryomagnet, and Pressure Systems Factors of Safety (Cont.)

Item	Sub Component	Load Case	Factor of Safety		Proof Factor	Reference	Event	Comments
			Ultimate	Yield				
Lines and Fittings	<1.5 inch dia.	Internal Pressure	4*MDP		1.5*MDP	NSTS1700.7B	All	Sect.208.4c
			4*MDP		1.5*MDP	SSP30559 C	All	Table 3.3.1-1
	>1.5 inch dia.	Internal Pressure	1.5*MDP		1.5*MDP	NSTS1700.7B	All	Sect.208.4c
			2.0*MDP		1.5*MDP	SSP30559 C	All	Table 3.3.1-1
Cryomagnet Suspension System		Mechanical Loads	1.4	1.2	1.2	NSTS14046 E	Liftoff/Landing	Test of Flight Components Including Temperature Corrections
Pressure System Components		Internal Pressure	2.5*MDP		1.5*MDP	NSTS1700.7B	All	Sect.208.4c
			2.5*MDP		1.5*MDP	SSP30559 C		Table 3.3.1-1
Unique Support Structure - 02		Mechanical	1.4	1.10	1.10	NSTS14046E	Liftoff/Landing	
			1.5	1.10	1.10	SSP30559 C	On Orbit	
Payload Attach System		Mechanical	2.0	1.25	No Test	SSP57003	Liftoff/Landing	Test includes CLA & On-orbit loads
			2.0	1.25		SSP57003	On Orbit	
Magnet		Mechanical / Magnet Forces	1.5	1.10	1.10	NSTS14046E	Liftoff/Landing	
			1.5	1.10	1.10	SSP30559 C	On Orbit	

Notes:

1) Negative differential pressure on primary payload structure shall use a factor of safety of 2.0 if certification is by analysis **only**. (SSP 30559 C , sect 3.3.2.1.2)
2) Vacuum jackets shall have pressure relief capability to preclude rupture in the event of pressure container leakage.(NSTS 1700.7 B, sect.208.4b.3)
3) Proof test factor for each flight pressure container shall be a minimum of 1.1 times MDP. Qualification, burst and pressure cycle testing is **not** required if all requirements of paragraph 208.4, 208.4a and 208.4b are met. (Ref. NSTS 1700.7 b, sect 208.4b.6)
4) Analysis of buckling of thin walled shells shall use appropriate "knock down factors" as per NASA SP-8007 (Ref. SSP30559 C, sect. 3.5.2)
5) Thermal stresses/loads shall be combined with mechanical and pressure stresses/loads when they are additive but shall not be combined when they are relieving.(Ref. SSP30559 C, sect.3.5.1.2)
6) Factors of safety for external pressure have been assumed same as the F.S. for internal pressure but there is no reference for these in any of the documents.
7) Design loads for collapse shall be ultimate loads except that any load component that tends to alleviate buckling shall **not** be increased by the ultimate factor of safety.(Ref. SSP30559 C, sect 3.5.2)
8) Suspension system for helium vessel and magnet coils to be static tested 1.2* max. limit load and must be conducted on the flight article.

Table A2: AMS-02 Secondary Structures Factors of Safety

Item	Sub Component	Load Case	Factor of Safety		Static Test	Reference	Event	Comments
			Ultimate	Yield				
Secondary	Anti-Coincidence Counter	Mechanical loads	2.0	1.25	No	NSTS14046 E (Space Shuttle)	Liftoff/Landing	
			2.0	1.25	No	SSP 30559 C (ISS)	On Orbit	
	Tracker	Mechanical loads	2.0	1.25	No	NSTS14046 E (Space Shuttle)	Liftoff/Landing	
			2.0	1.25	No	SSP 30559 C (ISS)	On Orbit	
	Time of Flight	Mechanical loads	2.0	1.25	No	NSTS14046 E (Space Shuttle)	Liftoff/Landing	
			2.0	1.25	No	SSP 30559 C (ISS)	On Orbit	
	Low Energy Particle Shield & Cryocoolers + Mounts	Mechanical loads	2.0	1.25	No	NSTS14046 E (Space Shuttle)	Liftoff/Landing	
			2.0	1.25	No	SSP 30559 C (ISS)	On Orbit	
	Transition Radiation Detector	Mechanical loads	2.0	1.25	No	NSTS14046 E (Space Shuttle)	Liftoff/Landing	
			2.0	1.25	No	SSP 30559 C (ISS)	On Orbit	
	TRD gas tubes	Pressure	2.0*DP	1.25*DP	1.2*DP	MIL-STD-1522A (Space Shuttle)	Liftoff/Landing Ground Ops.	1.0 atm. Inside, 1.0 atm. outside
			2.0*DP	1.25*DP	1.2*DP	SSP30559 C (ISS)	On Orbit	1.0 atm. Inside, 0.0 atm. outside
	TRD gas Supply – Xe tank	Pressure	Reqt. - 1.5*MDP Actual – 3.1* MDP	1.10*MDP	1.5*MDP	MIL-STD-1522A (Space Shuttle)	Liftoff/Landing Ground Ops.	Xenon MDP 3000 psig.
			Reqt. - 2.0*MDP Actual – 3.1* MDP	1.10*MDP	1.5*MDP	SSP30559 C (ISS)	On Orbit	

Table A2: AMS-02 Secondary Structures Factors of Safety (Cont.)

Item	Sub Component	Load Case	Factor of Safety		Static Test	Reference	Event	Comments
			Ultimate	Yield				
Secondary Structures (Contd.)	TRD gas Supply – CO_2 tank	Pressure	Reqt. – 1.5*MDP Actual – 2.0* MDP	1.10*MDP	1.5*MDP	MIL-STD-1522A (Space Shuttle)	Liftoff/Landing Ground Ops.	CO_2 MDP 3200 psig.
			Reqt. – 2.0*MDP Actual – 2.0* MDP	1.10*MDP	1.5*MDP	SSP30559 C (ISS)	On Orbit	
	Electronic	Mechanical loads	2.0	1.25	No	NSTS14046 E (Space Shuttle)	Liftoff/Landing	
			2.0	1.25	No	SSP 30559 C (ISS)	On Orbit	
	Ring Imaging Cherenkov Counter	Mechanical Loads	2.0	1.25	No	NSTS14046 E (Space Shuttle)	Liftoff/Landing	
			2.0	1.25	No	SSP 30559 C (ISS)	On Orbit	
	Electromagnetic Calorimeter	Mechanical Loads	1.4	1.2	No	NSTS14046 E (Space Shuttle)	Liftoff/Landing	Entire prototype has l been static tested.(Sine burst test
			1.4	1.25	No	SSP 30559 C (ISS)	On Orbit	Ref. Sect 17.2.6

Notes: 1) For test verified structures the ultimate factor of safety will be 1.40 for Space Shuttle and 1.50 for ISS and yield factor of safety will be 1.10 for Space shuttle and ISS.(Ref NSTS14046E and SSP30559C)
(These factors of safety are tentative and have to be approved by the NASA Structures Working Group)

2) Pressure vessels shall be designed and fabricated under an approved fracture control program. (Ref. NASA-STD-5003 and SSP30558C)

3) The payload structure must be capable of supporting limit loads from all critical load conditions without detrimental deformation and ultimate loads without failure.

4) All FSs have been approved by SWG and EM2 [26].

Acronyms: DP Delta pressure
MDP Max. design pressure

Appendix B: AMS-02 Component Liftoff/Landing Load Factors

Table B1: AMS-02 Component Liftoff/Landing Load Factors

Component	Approx. Weight		LF	Nx	Ny	Nz	Rx	Ry	Rz	Reference	Notes
	LBS	*KG*	*g*	*g*	*g*	*g*	*rad/sec^2*	*rad/sec^2*	*rad/sec^2*		
Lower TOF	263.	119.	Liftoff	***+3.7/-0.4***	***+1.4/-1.6***	***+1.4/-1.5***	***+4.5/-4.1***	***+8.4/-11.0***	***+3.9/-4.1***	3,6	C,G
			Nominal Landing	***+1.7/-2.0***	***+1.1/-1.1***	***+2.7/-7.4***	***+12.5/-11.1***	***+14.7/-18.1***	***+6.0/-4.8***	3,6	C,H1
			Abort Landing	***+1.2/-1.3***	***+0.7/-0.6***	***+2.1/-5.6***	***+5.2/-4.7***	***+10.7/-13.9***	***+6.0/-4.8***	3,6	C,H2
TRD/Upper TOF	985.	447.	Liftoff	***+3.7/-0.4***	***+1.4/-1.6***	***+1.4/-1.5***	***+4.5/-4.1***	***+8.4/-11.0***	***+3.9/-4.1***	3,6	C,G
			Nominal Landing	***+1.7/-2.0***	***+1.1/-1.1***	***+2.7/-7.4***	***+12.5/-11.1***	***+14.7/-18.1***	***+6.0/-4.8***	3,6	C,H1
			Abort Landing	***+1.2/-1.3***	***+0.7/-0.6***	***+2.1/-5.6***	***+5.2/-4.7***	***+10.7/-13.9***	***+6.0/-4.8***	3,6	C,H2
Thermal Control System			Liftoff	***+3.7/-0.4***	***+1.4/-1.6***	***+1.4/-1.5***	***+4.5/-4.1***	***+8.4/-11.0***	***+3.9/-4.1***	3,6	C,G
			Nominal Landing	***+1.7/-2.0***	***+1.1/-1.1***	***+2.7/-7.4***	***+12.5/-11.1***	***+14.7/-18.1***	***+6.0/-4.8***	3,6	C,H1
			Abort Landing	***+1.2/-1.3***	***+0.7/-0.6***	***+2.1/-5.6***	***+5.2/-4.7***	***+10.7/-13.9***	***+6.0/-4.8***	3,6	C,H2
TRD Gas Supply	258.	117.	***13***	-	-	-	-	-	-	1	B
Anti-Coincidence Counter	117.	53.	***17***	-	-	-	-	-	-	1	B
Tracker Assembly	438.	199.	***13***	-	-	-	-	-	-	3	B
Small Diameter Tracker Planes	-	-	-	***+7.2***	***+4.7***	***+7.9***	-	-	-	3,4	C,D
Large Diameter Tracker Planes	-	-	-	***+6.1***	***+2.7***	***+6.9***	-	-	-	3,4	C,D
Ladders	-	-	***40***	-	-	-	-	-	-	1	B
Thermal Bars	-	-	***40***	-	-	-	-	-	-	1	B
RICH	406.	184.	Liftoff	***+3.7/-0.4***	***+1.4/-1.6***	***+1.4/-1.5***	***+4.5/-4.1***	***+8.4/-11.0***	***+3.9/-4.1***	3,6	C,G
			Nominal Landing	***+1.7/-2.0***	***+1.1/-1.1***	***+2.7/-7.4***	***+12.5/-11.1***	***+14.7/-18.1***	***+6.0/-4.8***	3,6	C,H1
			Abort Landing	***+1.2/-1.3***	***+0.7/-0.6***	***+2.1/-5.6***	***+5.2/-4.7***	***+10.7/-13.9***	***+6.0/-4.8***	3,6	C,H2
Electronic Calorimeter	1407.	638.	-	***±7.8***	***±7.8***	***±11.1***	***±146***	***±123***	***±51***	3	C
USS-02	1592.	722.	Liftoff	***+3.7/-0.4***	***+1.4/-1.6***	***+1.4/-1.5***	***+4.5/-4.1***	***+8.4/-11.0***	***+3.9/-4.1***	3	C,G
			Nominal Landing	***+1.7/-2.0***	***+1.1/-1.1***	***+2.7/-7.4***	***+12.5/-11.1***	***+14.7/-18.1***	***+6.0/-4.8***	3	C,H1
			Abort Landing	***+1.2/-1.3***	***+0.7/-0.6***	***+2.1/-5.6***	***+5.2/-4.7***	***+10.7/-13.9***	***+6.0/-4.8***	3,6	C,H2
Cryo-magnet											
Vacuum Case	1587.	720.	Liftoff	***+3.7/-0.4***	***+1.4/-1.6***	***+1.4/-1.5***	***+4.5/-4.1***	***+8.4/-11.0***	***+3.9/-4.1***	3	C,G
			Nominal Landing	***+1.7/-2.0***	***+1.1/-1.1***	***+2.7/-7.4***	***+12.5/-11.1***	***+14.7/-18.1***	***+6.0/-4.8***	3	C,H1
			Abort Landing	***+1.2/-1.3***	***+0.7/-0.6***	***+2.1/-5.6***	***+5.2/-4.7***	***+10.7/-13.9***	***+6.0/-4.8***	3,6	C,H2
Magnet, Cryo-system			Liftoff	***+3.7/-0.4***	***+1.4/-1.6***	***+1.4/-1.5***	***+4.5/-4.1***	***+8.4/-11.0***	***+3.9/-4.1***	3	C,G
	3525.	1599.	Nominal	***+1.7/-2.0***	***+1.1/-1.1***	***+2.7/-7.4***	***+12.5/-11.1***	***+14.7/-18.1***	***+6.0/-4.8***	3	C,H1

			Landing								
			Abort Landing	***+1.2/-1.3***	***+0.7/-0.6***	***+2.1/-5.6***	***+5.2/-4.7***	***+10.7/-13.9***	***+6.0/-4.8***	3,6	C,H2
Helium Tank & Support System			Liftoff	***+3.7/-0.4***	***+1.4/-1.6***	***+1.4/-1.5***	***+4.5/-4.1***	***+8.4/-11.0***	***+3.9/-4.1***	3	C,G,J
	1671.	758.	Nominal Landing	***+1.7/-2.0***	***+1.1/-1.1***	***+2.7/-7.4***	***+12.5/-11.1***	***+14.7/-18.1***	***+6.0/-4.8***	3,5	C,H1,I,J
			Abort Landing	***+1.2/-1.3***	***+0.7/-0.6***	***+2.1/-5.6***	***+5.2/-4.7***	***+10.7/-13.9***	***+6.0/-4.8***	3,6	C,H2

Notes and References:

A: A separate acoustic analysis must be performed for the TRD to validate Reference 1&3 LFs.
B: The LF shown is the primary LF. These LFs are to be applied in any axis, with a load factor of 25% of the primary LF applied to the remaining 2 orthogonal axes, simultaneously.
C: All possible permutations of ± loads shall be considered in strength assessment. Rotation loads should be applied at component C.G.
D: N=RSS of low freq LF and high freq LF, Low freq LF from Tracker Assembly line, High freq LF from STS-91 flight data.
Small Diameter High Freq LF = 4.46 G (3 Sigma, All Directions), Large Diameter High Freq LF = 2.14 G (3 Sigma, All Directions).
E: Apply loads in all directions simultaneously for all combinations. (Reference 2)
F: This is the weight for only lower TOF. Upper TOF weight is in TRD/Upper TOF weight.
G: Liftoff Design Load Factors
H1: **Nominal** Landing Design Load Factors
H2: Abort Landing Design Load Factors
I: Landing load factors include slosh load factors of Fx=1.52 g and Fy=1.72 g. For the helium tank, the helium level is considered ½ full during contingency landing (per Reference 5).
For an abort landing, assume the helium tank is full, and use the load factors from section 4.2 of JSC 28792 (AMS-02 SVP).
These landing load factors should apply to all of the system mass (helium tank & helium). For the support system, the entire cold mass applies.
J. Helium Z rotational mode ignored & lower moment of inertia (helium tank only) used for this degree of freedom.
K: Component weights are only given as a **reference only**, the final component weight may be different.
L: Load Factors incorporate suggestions from NASA Structures Working Group, Uncertainty Factor of 1.5 already applied to given loads.

1. 'Simplified Design Options for STS Payloads', JSC 20545 [11]
2. 'Mass Acceleration Curves for Trunnion Mounted Payload Components', SMD-93-0287 [5]
3. Modified Load Factors from 'AMS Structural Verification Plan for STS-91', JSC-27378 [8]
4. 'Report of Flight Accelerations Recorded by the WBSAAMD on STS-91', HDID-SAS-98-0247 [6]
5. 'Helium Slosh Loads for the Alpha Magnetic Spectrometer Helium Tank', MSAD-00-0062 [36]
6. 'Load Factors are combined with boundary displacements, provided by LMSO, at the USS-02 mounting interfaces. See Appendix D

Appendix C: Safety Assessments Related to Helium Venting

AMS-02 Cryomagnet Helium Venting Analyses

Based on AMS-02 Cryomagnet Helium Venting Scenario Assessment presented to the PSRP in October, 2001, the following analyses will be performed.

Trent Martin
November 6, 2001

For each analysis, please provide the following information:

- Pressure of the VC versus time
- Pressure of the He tank versus time
- Temperature of the He versus time
- Helium vent rate versus time
- Heat load versus time
- Exit temperature of the vented helium

Assumption:

1. Complete loss of vacuum in the Shuttle is not a credible failure.
2. Plumbing line failure is not a credible failure.
3. Loss of vacuum prior to T=0 is not a credible failure.
4. Loss of vacuum after T=0 is credible
   a. Analysis will assume 3 inch long gap in 2 large o-ring seals. Gaps are next to one another and not on opposing sides of the VC rings.
   b. A gap of 0.001 inch will be assumed for first analysis.
   c. A gap of 0.003 inch will be assumed for second analysis.
5. Shuttle has confirmed that loss of vacuum for landing is not a concern.
6. Shuttle has confirmed that loss of vacuum prior to launch is not a concern.

Analysis 1: Assume puncture of VC to determine MDP of He tank with given Burst Disk (BD) size. Largest puncture on for ground operations is assumed to be a complete loss of vacuum. Assume the magnet is sitting on the ground at standard atmospheric temperature and pressure.

Analysis 2: Assume 3 x 0.001 inch hole in VC during ascent. Assume hole opens at T=0 seconds.

Analysis 3: Assume 3 x 0.003 inch hole in VC during ascent. Assume hole opens at T=0 seconds.

Analysis 4: Take Analysis 2, but apply landing repressurization curve starting at T+30 minutes. Include additional data points that were provided by STS in repressurization curve.

Analysis 5: Take Analysis 3, but apply landing repressurization curve starting at T+30 minutes. Include the additional data points that were provided by STS in the repressurization curve.

Analysis 6: Take Analysis 2, but apply landing repressurization curve starting at T+45 minutes. Include the additional data points that were provided by STS in the repressurization curve.

Analysis 7: Take Analysis 3, but apply landing repressurization curve starting at T+45 minutes. Include the additional data points that were provided by STS in the repressurization curve.

Analysis 8: Take Analysis 2, but apply landing repressurization curve starting at T+55 minutes. Include the additional data points that were provided by STS in the repressurization curve.

Analysis 9: Take Analysis 3, but apply landing repressurization curve starting at T+55 minutes. Include the additional data points that were provided by STS in the repressurization curve.

In addition to the liftoff and landing pressure curves found in the NSTS-21000-ISS-IDD, the following additional payload bay pressure profiles will be incorporated:

	Pressure (lbf/ft^2)	
Time (Hrs)	**Nominal Landing**	**AOA**
0.0	0.00106	0.00106
0.1	0.0015	0.0015
0.2	0.08	0.08
0.28	0.2	0.2
0.36	0.9	0.9
0.44	2.5	2.5
0.46	296.0	296
0.5	1079.0	1079.0
0.52	1904.0	1904.0
0.532	2116.0	2116.0

	Pressure (lbf/ft^2)
Time (Hrs)	**TAL**
0.0	0.00106
0.075	0.0015
0.15	0.08
0.211	0.2
0.271	0.9
0.331	2.5
0.346	296.0
0.376	1079.0
0.391	1904.0
0.4	2116.0

Time = 0.0 corresponds to beginning of the entry phase
Last time corresponds to touchdown

AMS-02 Cryomagnet Helium Credible Emergency Venting Scenarios

RTLS, TAL, AOA
- Plumbing Line Break (BDs, Extensive Testing for Two Fault Tolerant EquivalentDesign to Minimum Risk)
- Leak Through O-Ring (BDs, Extensive Testing for Two Fault Tolerant EquivalentDesign to Minimum Risk)
- He trapped in internal plumbing (BDs)
- Frozen air in plumbing line (BDs)

On-Orbit
- Puncture of He Tank by M&OD (Analysis shows this probability is extremely low, will meet all STS and ISS M&OD requirements)

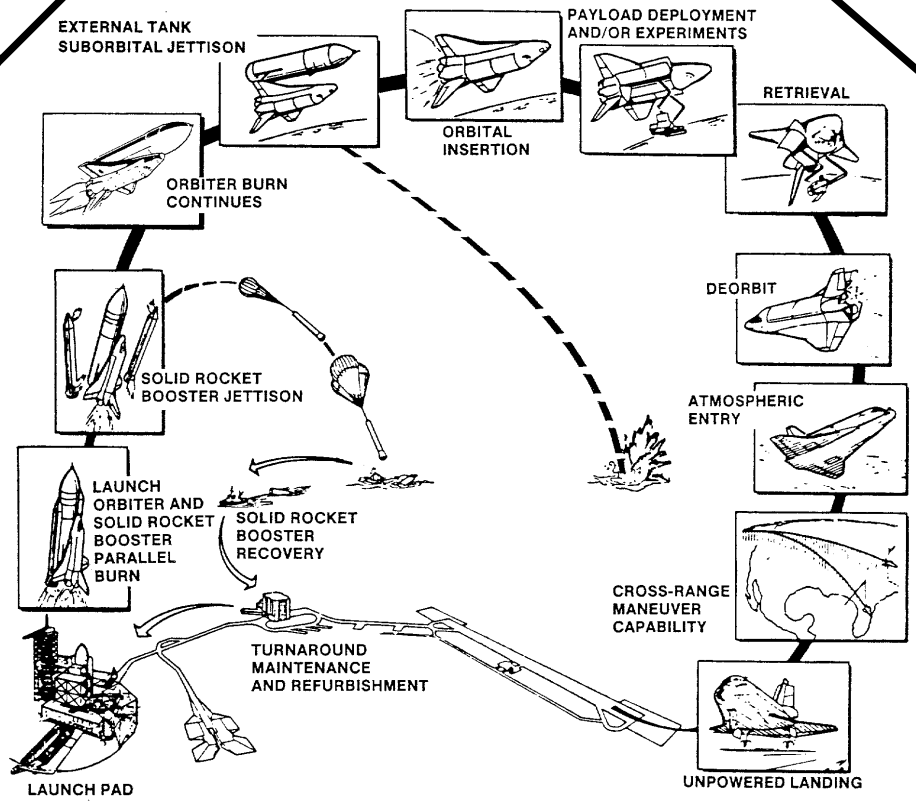

Liftoff & Ascent
- Plumbing Line Crack (BDs, Extensive Testing for Design to Minimum RiskTwo Fault Tolerant Equivalent)
- Leak Through O-Ring (BDs, Extensive Testing for Design to Minimum RiskTwo Fault Tolerant Equivalent)
- He trapped in internal plumbing (BDs)
- Frozen air in plumbing line (BDs)

Normal Landing
- No Credible Scenarios (all Helium is gone after ISS flight)

Ground Operations
- VC Puncture (Burst Disks (BDs)/Piped away from personnel)
- Plumbing Line Crack (BDs/Piped away from personnel)
- He trapped in internal plumbing (BDs)
- Frozen air in plumbing line (BDs/Piped away)

Prelaunch (Payload Bay Doors Closed)
- He trapped in internal plumbing (BDs)
- Frozen air in plumbing line (BDs)

Appendix D: Experiment Component Summary Structural Verification Plans

Section 17 details each payload sub-component. It includes every major sub-system. Sections 1-16 listed above detail the general structural verification requirements. Section 17 is provided for all issuers that are not specifically covered by the general requirements in Sections 1-16. For all of the following sections, assume there are no changes to the general requirements unless specifically mentioned below. To provide a simple format for each Experiment Component, Appendix D has been added to this document for Revision B.

All AMS-02 experimenters must send the following information to JS, so that JS can compile and present the data to NASA for all safety and design reviews. The safety and design review schedule is shown in Section 18, and the data must be received by JS at least 2 months prior to the review.

Please send:

- Predicted and actual measured weights
- Design Drawings
- Component Materials List
- Structural Fastener List
- Stress analysis report with the appropriate factors of safety and load factors (must include a summary table of the minimum margins of safety)
- Fracture analysis report (if one is available)
- Details and results of any structural testing that is performed (even if it is for mission success reasons and is not safety related)

Transition Radiation Detector

Weight	Load Factors
TRD Assembly 723 lbs (328 Kg)	Per DCLA results: Launch: Nx = +3.7/-0.4 Ny = +1.4/-1.6 Nz = +1.4/-1.5 Rx = +4.5/-4.1 Ry = +8.4/-11.0 Rz = +3.9/-4.1 Nominal Landing (Empty SFHe Tank): Nx = +1.7/-2.0 Ny = +1.1/-1.1 Nz = +2.7/-7.4 Rx = +12.5/-11.1 Ry = +14.7/-18.1 Rz = +6.0/-4.8 Abort Landing (Full SFHe Tank): Nx = +1.2/-1.3 Ny = +0.7/-0.6 Nz = +2.1/-5.6 Rx = +5.2/-4.7 Ry = +10.7/-13.9 Rz = +6.0/-4.8 Load Factors are combined with boundary displacements, provided by LMSO, at the USS-02 mounting interfaces. -May be updated by acoustic analysis. -Units: N (g), R (rad/sec^2) -R applied at CG of AMS-02 payload -All possible permutations of ± loads should be considered.

Note that SVP section 4.5.1 applies to all exposed surfaces that could be contacted by a contingency EVA astronaut. Kick loads must be applied and analyzed to show positive margins.

Small Sub-components

Per SVP Table 4.4

Weight (lbs)	Load Factor (g)
<20	40
20-50	31
50-100	22
100-200	17
200-500	13

-Apply LF in worst direction with 25% applied in the other two orthogonal directions.

Structural Verification (Required by NASA Safety)

First mode > 50 Hz	No Dynamic Test Required pending SWG review of Structural Analysis
Current First Mode	50.1 Hz (UTOF drum mode)
Static Test	No static testing required due to high FS
Stress Margins	Analysis only to FSs listed below

Optional Verification (useful for mission success)

Subcomponent Electronics/Boxes

Random vibration to MWL (SVP Table 15.2)
6.8 Grms level in X, Y, & Z axes with sine sweep tests before & after

Straw Module

Random vibration to MWL (SVP Table 15.2)
6.8 Grms level in X, Y, & Z axes with sine sweep tests before & after Completed
Acoustic test (SPL of 125 dB)

Thermo-vacuum test	Completed
EMI test	Completed
Carbon fiber composite (CFC) stiffener tension test	Completed

Honeycomb/Octagon Panels

Side panel skin tension test	Completed
Side panel skin bending test	Completed
Side panel bending test	Completed
Side panel shear test	Completed
Side panel corner junction test	Completed

Static load test of full size panel with slits

Factors of Safety

Ultimate Factor of Safety	2.0
Yield Factor of Safety	1.25

Fracture Control

Component	Fracture Classification
M Structure & Fasteners	M Structure will be shown to be low risk by analysis Fasteners will be shown to be failsafe by analysis
Octagon Structure	TBD by LM based on RWTH Stress Report
Top & Bottom Honeycomb	TBD by LM based on RWTH Stress Report
TRD Tubes	TBD by LM based on RWTH Stress Report
TRD Tube Brackets & Fasteners	Verify fail-safe by analysis
Electronics/Plumbing Boxes	Verify fail-safe by analysis
Electronics/Plumbing composite Supports	Verify fail safe by analysis

Component Materials List

Final due by July 31, 2001	Has been delivered

Structural Fastener List

Final due by CDR

Design Drawing Package

Final due by FSR Phase II

Transition Radiation Detector Gas Supply System

Weight	Load Factors
TRD gas system 258 lbs (117 Kg)	Per Appendix B ± 13g Applied in worst direction with 25%(±3.25g) applied in the other two orthogonal directions
Structural Verification (Required by NASA Safety)	
First Mode > 50 Hz	No Dynamic Test Required pending SWG review of Structural Analysis
Current First Mode	74 Hz. Smart hammer or modal test required.
Static Test	No static testing required due to high FS
Stress Margins of safety	Analysis only to FSs listed below
Pressure testing	Per SVP JSC28792 Rev A. Sect 17
Xe and CO2 Tanks, mixing tank	1.5 MDP proof pressure test
Straw tubes	2.0 MDP minimum burst
Lines and fittings Connections between manifolds and TRD segments (PEEK tubes)	ARDE testing of pressurized components
Valves, pumps, pressure sensors, Regulators, filters etc.	LM verify Vendor Qual. test data
Optional Verification (useful for mission success)	
Components, Box C, Manifold, Manifold components, Box S with Mass simulators	Random Vibration to MWL (Table 8) 6.8 G Level in X, Y, & Z axes with sine sweep tests before & after vibration test at Aachen .
Xe tank	External load test performed to 8.9 Grms At 0.08 g^2/Hz. Test on Xe tank was done during qualification for Space Station Plasma Contactor Unit
CO2 tank	External load test performed to 8.9 Grms At 0.07 g^2/Hz (axial), 4.5 Grms at 0.02 g^2/Hz(lateral)
Orbital welds, Welded joint	NDE to be performed to check welds
Full flight Box S only	Leak check
Factors of Safety	
Pressurized components	
Ultimate Factor of Safety	2.0 x MDP
Lines and fittings	< 1.5 in. dia. Ult. F.S = 4.0 x MDP >1.5 in. dia. Ult. F.S = 2.0 x MDP
Structural components	
Ultimate factor of safety	2.0
Yield factor of safety	1.25
Fracture Control	
Component	Fracture Classification
Xe tank	LM verify fracture report by Boeing, Canoga Park (EID-02325)
CO2 tank	LM verify ARDE fracture report

Mixing tank	LM verify ARDE fracture report
Lines and fittings	TBD by LM to show LBB
Straw tubes (PEEK)	TBD by LM based on RWTH Stress Report
Fasteners and supports Box C to Crate Racks Box S to USS-02	Verify by Fail safe analysis

Component Materials List
Final due by March, 2002

Structural Fastener List
Final due by CDR

Design Drawing Package
Final due by FSR Phase II

Time of Flight

Weight

TOF Assembly 525 lbs (238 Kg) Total

Load Factors

Per DCLA results:

Launch:
Nx = +3.7/-0.4 Ny = +1.4/-1.6 Nz = +1.4/-1.5
Rx = +4.5/-4.1 Ry = +8.4/-11.0 Rz = +3.9/-4.1

Nominal Landing (Empty SFHe Tank):
Nx = +1.7/-2.0 Ny = +1.1/-1.1 Nz = +2.7/-7.4
Rx = +12.5/-11.1 Ry = +14.7/-18.1 Rz = +6.0/-4.8

Abort Landing (Full SFHe Tank):
Nx = +1.2/-1.3 Ny = +0.7/-0.6 Nz = +2.1/-5.6
Rx = +5.2/-4.7 Ry = +10.7/-13.9 Rz = +6.0/-4.8

Load Factors are combined with boundary displacements, provided by LMSO, at the USS-02 mounting interfaces.

-May be updated by acoustic analysis.
-Units: N (g), R (rad/sec^2)
-R applied at CG of AMS-02 payload
-All possible permutations of ± loads should be considered.

Structural Verification (Required by NASA Safety)

Upper TOF First mode < 50 Hz	Modal Test of TOF system will be performed. FEM will be correlated and integrated with full payload model prior to full payload modal testing.
Upper TOF Current First Mode	50.1 Hz (First mode is a drum mode)
Lower TOF First Mode > 50 Hz	No Dynamic Test Required pending SWG review of Structural Analysis
Lower TOF Current First Mode	50.9 Hz (First mode is a drum mode) Smart hammer or modal test required.
Static Test	Possible tests pending review of structural analysis
Stress Margins	Analysis only to FSs listed below
Honeycomb	Testing to ensure quality

Optional Verification (useful for mission success)

TOF Assembly	Random Vibration to MWL (SVP Table 15.2) 6.8 Grms Level in X, Y, & Z axes with sine sweep test before & after

Factors of Safety

Ultimate Factor of Safety	2.0
Yield Factor of Safety	1.25

Fracture Control

Component	Fracture Classification
TOF Structure & Fasteners	Structure will be shown to be low-risk by analysis. Fasteners to be verified by fail-safe analysis

Component Materials List
Final due by March, 2002

Structural Fastener List
Final due by CDR

Design Drawing Package
Final due by FSR Phase II

Tracker

Weight

Tracker Assembly	438 lbs (198.7 Kg)	Load Factors Per SVP Appendix B
Small Diameter Tracker Planes		Nx = ± 7.2 Ny = ± 4.7 Nz = ± 7.9
Large Diameter Tracker Planes		Nx = ± 6.1 Ny = ± 2.7 Nz = ± 6.9 -Units: N (g) -All possible permutations of ± loads should be considered.
Small Sub-components:		Per SVP Table 4.4

	Weight (lbs)	Load Factor (g)
Ladders	<20	40
	20-51	31
Thermal Bars	50-100	22
	100-201	17
Tracker Feet	200-500	13

-Apply LF in worst direction with 25% applied in the other two orthogonal directions.

Structural Verification (Required by NASA Safety)

First mode > 50 Hz	No Dynamic Test Required pending SWG review of Structural Analysis
Individual Outer Diameter Planes	Above 50 Hz
Internal plates	Simply supported 47Hz, Clamped 73.0 Hz (Ref. Structural Analysis Report, Contraves Space, AMS-ANR-002, Issue1, Table 6.3-1, Page 17)
Stress Margins of Safety	Analysis only to FSs listed below

Entire system > 50Hz except as mentioned above

Optional Verification (useful for mission success)

Tracker Assembly	Random Vibration to MWL (SVP Table 15.2) 6.8 Grms Level in X, Y, & Z axes with sine sweep tests before & after
Thermal bar	Vibration test to 10.5 Grms
Tracker fixation	Vibration test to 6.8 Grms
New inserts on plane 1 and 6	Strength tests(shear and tension) done (Ref. Contraves report W-ET 99.11.15-1, pages 1 to 5)

Factors of Safety

Ultimate Factor of Safety	2.0
Yield Factor of Safety	1.25

Fracture Control

Component	Fracture Classification
Small Diameter Tracker Planes	Will be shown to be low risk by analysis
Large Diameter Tracker Planes	Will be shown to be low risk by analysis
Ladders	Will be shown to be low risk by analysis
Thermal Bars	Will be shown to be low risk by analysis
Tracker Feet	Will be shown to be low risk by analysis. Tracker Brackets & Fasteners Will be shown to be fail-safe by analysis

Component Materials List

Final due by July 31, 2001 — Has been delivered

Structural Fastener List

Final due by CDR

Design Drawing Package

Final due by FSR Phase II

Anti-Coincidence Counter

Weight		Load Factors
ACC Assembly	117 lbs (53 Kg)	Per SVP Table 4.4 Weight (lbs) Load Factor (g) 100-200 17 - Apply LF in worst direction with 25% applied in the other two orthogonal directions.
ACC Components	+/- z clamps CFC sup. Cylinder PMT boxes Opt. Connectors Var. clamps	Per SVP Table 4.4 Weight (lbs) Load Factor (g) <20 40 - Apply LF in worst direction with 25% applied in the other two orthogonal directions. - See optional verification
Structural Verification (Required by NASA Safety)		
First mode > 50 Hz		No Dynamic Test Required pending SWG review of Structural Analysis
Static Test		No static test required due to high FS
Stress Margins of safety		Analysis only to FSs listed below
Optional Verification (useful for mission success)		
ACC Assembly		Random Vibration to MWL (SVP Table 15.2) 6.8 Grms Level in X, Y, & Z axes with sine sweep test before & after Thermal vacuum test. (Testing was completed for STS-91) Thermal Vacuum testing new PMTs Completed
Electronics		See TOF system
Factors of Safety		
Ultimate Factor of Safety		2.0
Yield Factor of Safety		1.25
Fracture Control		
<u>Component</u>		<u>Fracture Classification</u>
ACC Structure		Fail-safe by containment (Same as STS-91)
ACC Fasteners		Fail-safe by analysis (Same as STS-91)
Component Materials List Final due by July 31, 2001		Has been delivered
Structural Fastener List Final due by CDR		
Design Drawing Package Final due by FSR Phase II		

Ring Imaging Cherenkov Counter

Weight

RICH Assembly 406 lbs (184 Kg)

Load Factors

Per DCLA results:

Launch:

Nx = +3.7/-0.4 Ny = +1.4/-1.6 Nz = +1.4/-1.5
Rx = +4.5/-4.1 Ry = +8.4/-11.0 Rz = +3.9/-4.1

Nominal Landing (Empty SFHe Tank):

Nx = +1.7/-2.0 Ny = +1.1/-1.1 Nz = +2.7/-7.4
Rx = +12.5/-11.1 Ry = +14.7/-18.1 Rz = +6.0/-4.8

Abort Landing (Full SFHe Tank):

Nx = +1.2/-1.3 Ny = +0.7/-0.6 Nz = +2.1/-5.6
Rx = +5.2/-4.7 Ry = +10.7/-13.9 Rz = +6.0/-4.8

Load Factors are combined with boundary displacements, provided by LMSO, at the USS-02 mounting interfaces.

-May be updated by acoustic analysis.
-Units: N (g), R (rad/sec^2)
-R applied at CG of AMS-02 payload
-All possible permutations of ± loads should be considered.

Small Sub-Components

Per SVP Table 4.4

Weight (lbs)	Load Factor (g)
<20	40
20-50	31
50-100	22
100-200	17
200-500	13

-Apply LF in any direction with 25% applied in the other orthogonal directions.

Structural Verification (Required by NASA Safety)

First Mode > 50 Hz — No Dynamic Test Required pending SWG review of Structural Analysis

Current First Mode — 77.14 Hz (Modes below this have < 2% mass participation)

Static Test — No static testing due to high FS

Stress Margins of safety — Stress analysis report to FSs listed below

Optional Verification (useful for mission success)

RICH Assembly — Random Vibration Test to MWL (SVP Table 15.2)
6.8 Grms Level in X,Y, & Z axes with sine sweep tests before and after
Component dynamic tests.

Conical Reflector — Possible Acoustic Testing depending on acoustic analysis results.
Vibration test whole component.
Structural strength tests (Tensile and bending)

Factors of Safety

Ultimate Factor of Safety — 2.0

Yield Factor of Safety — 1.25

Fracture Control

Component	Fracture Classification
Aerogel Structure	TBD by LM based on Stress Report
Conical Reflector	Will be shown to be low risk by analysis

Honeycomb Structure	Will be shown to be low risk by analysis
Octagonal Structure	Will be shown to be low risk by analysis
Lower Panel	Will be shown to be low risk by analysis
RICH Fasteners	Will be shown to be fail-safe by analysis

Component Materials List

Current	Final due by July 31, 2001
Aluminum Alloy 6061	
Carbon Fiber and Epoxy Composite	

Structural Fastener List
Final due by CDR

Design Drawing Package
Final due by FSR Phase II

Electromagnetic Calorimeter

Weight

ECAL Assembly	1407 lbs (638 Kg)	Load Factors Per SVP Appendix B Nx = ± 7.8 Rx = ± 146 Ny = ± 7.8 Ry = ± 123 Nz = ± 11.1 Rz = ± 51 -Units: N (g), R (rad/sec^2) -R applied at component CG -All possible permutations of ± loads should be considered.
Small Sub-components		Per SVP Table 4.4 Weight (lbs) Load Factor (g) <20 40 20-52 31 50-100 22 100-202 17 200-500 13 -Apply LF in worst direction with 25% applied in the other two orthogonal directions.

Structural Verification (Required by NASA Safety)

Entire prototype	Random vibration to MEFL (SVP Table 15.1) 3.1, 2.3, 3.2 (Grms) in X, Y, Z axes.
Entire prototype	Sine sweep test with 0.25 G from 10-300 Hz, sweep rate = 2 oct/min before and after each full level random vibration.
First Mode > 50 Hz	Final sine sweep test required, verify no change when compared to the first and second sine sweep tests.
Current First Mode	64 Hz Z axis test
Static Test	Sine burst test performed to 12g
Stress Margins	Analysis only to FSs listed below

Optional Verification (useful for mission success)

PMT Tubes	Random Vibration of single PMT Tube (6.8 Grms) Thermal Vacuum Test of all PMT Tubes	Completed
Prototype ECAL	Sine Sweep #1 (.25 g – 0-200 Hz) Random vibration (levels defined by LMSO) Sine Sweep #2 (.25 g – 0-200 Hz) Sine Burst Test to ~1.2 x limit load Sine Sweep #3 (.25 g – 0-200 Hz)	Completed Completed Completed Completed
Flight ECAL	Sine Sweep (.25 g – 0-200 Hz)	
Prototype Honeycomb plate	Static test to 1.4 x limit load	Completed
Flight Honeycomb plate	Static test to 1.2 x limit load	Completed.

Factors of Safety

Ultimate Factor of Safety	1.4
Yield Factor of Safety	1.2

Fracture Control

Component	Fracture Classification
Support Structure	Will be shown to be low risk by analysis

Honeycomb plate	Will be shown to be low risk by analysis
ECAL Brackets & Fasteners	Verify fail-safe by analysis

Component Materials List
Final due by March, 2002

Structural Fastener List
Final due by CDR

Design Drawing Package
Final due by FSR Phase II

Thermal Control System

Load Factors

Per DCLA Results:
Launch:
Nx = +3.7/-0.4 Ny = +1.4/-1.6 Nz = +1.4/-1.5
Rx = +4.5/-4.1 Ry = +8.4/-11.0 Rz = +3.9/-4.1

Nominal Landing (Empty SFHe Tank):
Nx = +1.7/-2.0 Ny = +1.1/-1.1 Nz = +2.7/-7.4
Rx = +12.5/-11.1 Ry = +14.7/-18.1 Rz = +6.0/-4.8

Abort Landing (Full SFHe Tank):
Nx = +1.2/-1.3 Ny = +0.7/-0.6 Nz = +2.1/-5.6
Rx = +5.2/-4.7 Ry = +10.7/-13.9 Rz = +6.0/-4.8

Load Factors are combined with boundary displacements, provided by LMSO, at the USS-02 mounting interfaces.

-May be updated by acoustic analysis.
-Units: N (g), R (rad/sec^2)
-R applied at CG of AMS-02 payload
-All possible permutations of ± loads should be considered.

* Table 4.4 per SVP shall be applied for other components of this system such as Heat Pipes and Brackets etc.
Note that SVP section 4.5.1 applies to all exposed surfaces that could be contacted by a contingency EVA astronaut. Kick loads must be applied and analyzed to show positive margins.

Structural Verification (Required by NASA Safety)

First mode < 50 Hz	Sine Sweep, Smart Hammer or Modal Test Required
First mode > 50 Hz	No Dynamic Test Required pending SWG review of Structural Analysis
Static Test	No static testing required due to high Factor of Safety (FS)
Stress Margins of Safety	Stress analysis of the Radiator Panels to FSs listed below
Radiator Panels in combination with Meteoroid and Debris Shielding	Possible acoustic testing depending on acoustic analysis results

Optional Verification (useful for mission success)

Honeycomb Radiator Panels embedded with heat pipes	Random vibration test to MWL (Table 8 per SVP)

Factors of Safety

Ultimate Factor of Safety	2.0
Yield Factor of Safety	1.25

Fracture Control

Component	Fracture Classification
All components	TBD by LM based on Stress Analysis
Fasteners	Verify fail-safe by stress analysis

Component Materials List
Final due by March, 2002

Structural Component and Fastener List

Final due by CDR

Design Drawing Package

Final due by FSR Phase II

Notes:
1. As the design of the Radiator Panel is better defined, the structural verification summary of the Radiator Thermal Control System will be updated.
2. One of the assumptions is that each of the Radiator Panels is common with the Meteoroid and Debris Shielding (MDS). Another is that the Radiator Panels include the honeycomb primary structure with embedded heat pipes.

Tracker Thermal Control System

Weight

Tracker thermal control system

Load Factors

Component Weight (lbs)	Load factor(g)
<20	40
20-50	31
50-100	22
100-200	17
200-500	13

-Apply LF in any direction with 25% applied in the other orthogonal directions.

Structural Verification (Required by NASA Safety)

First mode > 50 Hz	84 Hz by tests at University of Geneva
Static Test	No static testing due to high FS

Pressurized systems

Lines and fittings	Burst factor	Proof factor
Diameter < 1.5 in.	4.0	1.5
Diameter = > 1.5 in.	2.5	1.5
Other components	2.5	1.5

	MDP (bar)/(psi)	BP(bar)	PP(bar)
Valves/pumps/sensors	90 (1305)	225	135
Lines and fittings	90 (1305)	360	135
Accumulators (1 liter)	90 (1305)	225	135
Storage vessel (5 liter)	90 (1305)	225	135

BP Burst pressure
PP Proof pressure

Structural Items	Load Factor (g)
Component box 60 kg (132 lbs)	17 Sealed container shall have venting analysis
Evaporator 9kg (20 lbs)	40
Condenser 9kg (20 lbs)	40

Optional Verification (Mission Success)

Evaporator	Pressure drop and heat transfer test
Heat exchanger	Functionality test
Thermal bar	Testing in vacuum with CO2 loop. Any other tests necessary for mission success.

Factors of Safety

Ultimate Factor of Safety	2.0
Yield Factor of Safety	1.25

Fracture Control

Component	Fracture Classification
Pressurized components and sealed container	TBD by LM based on stress analysis to show Leak –Before Burst
Component Box	TBD by LM based on stress analysis to show Contained.
Fasteners	Verify fail-safe by analysis

Component Materials List
Final due by March 2002

Structural Fastener List
Final due by CDR

Design Drawing Package
Final due by FSR Phase II

Notes: Ultimate load = Ultimate factor of safety x Limit load
Yield load = Yield factor of safety x Limit load
The “Ultimate factor of safety” (FSu) and the “Yield factor of safety”
(FSy) are the safety factors needed to calculate the “Ultimate loads” and “Yield loads.”
The “Limit load” is the maximum load expected on the structure during its design service life
Limit load = Load factor x Weight

Ultimate pressure = Ultimate pressure factor x MDP
Where “MDP” stands for “Maximum Design Pressure”. MDP for a pressurized system shall be the highest pressure defined by the maximum relief pressure, maximum regulator pressure or maximum temperature.
The “Ultimate Burst factor” is a multiplying factor applied to the MDP to obtain ultimate pressure. Pressurized components are to be designed to the following factors of safety.

In case of a pressurized system, the loads caused by the ultimate pressure needs to be added to the ultimate load caused by vehicle acceleration. To test the system for evidence of satisfactory workmanship, a proof pressure needs to be applied.

Proof pressure = Proof factor x MDP

- Pressurized components shall sustain the proof pressure without detrimental deformation.

Sealed compartments shall be able to withstand the maximum pressure differential associated with depressurization and repressurization during liftoff and landing. A venting analysis shall be performed to show that there is sufficient vent area.

To classify mechanical fasteners as fail-safe it must be shown by analysis or test that the remaining structure after a single failure of the highest loaded fastener can withstand the loads with a factor of safety of 1.0.

Components in a sealed box do not need structural verification when it can be proved that the released parts are completely contained and will not cause a catastrophic hazard.

All fasteners larger than M4 (US #8 and above) are subject to NASA structural testing. It is recommended to use NASA provided MS- or NAS- fasteners.

JS will provide all structural MS- and NAS- fasteners as mentioned in C4 upon request of the TTCS group.

Electronic Boxes

Weight	Load Factors
Avionics crates & cables not attached to Radiator Panels :	per SVP Table 4.4
827 lbs (375 (kg)	

Weight (lbs)	Load factor (g)
< 20	40
20-50	31
50-100	22
100-200	17
200-500	13

∗ Several crates will be mounted on either crate columns or the back of radiator panels. The total crate column/radiator panel weight could be 100-300 lbs apiece.

Structural Verification (Required by NASA Safety)

First Mode∗ > 50 Hz	No dynamic test required pending SWG review of Structural Analysis
First Mode < 50 Hz	Frequency verification testing must be performed
Static Test	No static testing required due to high FS
Stress Margins of safety	Analysis only, FS listed below

∗ The frequency requirement is based on an entire crate column or radiator panel.

Optional Verification (Useful for mission success)

Subcomponent Electronics/Boxes	Random Vibration to MWL (SVP Table 15.2) 6.8 Grms Level in X, Y, and Z axes with sine sweep tests before and after Thermal vacuum tests EMI/EMC & DC Magnetic Field testing

Factors of Safety

Ultimate Factor of Safety	2.0
Yield Factor of Safety	1.25

Fracture Control

Component	Fracture Classification
Avionics crates	TBD by LM based on crate/radiator stress analysis
Brackets & bolts	Verify fail safe by analysis

Component Materials List
Final due by March 2002

Structural Fastener List
Final due by CDR

Design Drawing Package
Final due by FSR Phase II

Appendix E: Pressure System Summary Tables

Table E1: TRD Gas Supply System Pressure System Summary Table

Description	Volume (in^3)	Operating Pressure (psid)	MDP (psid)	MDP Determination	Burst Pressure (psid)	Burst SF	Proof Pressure (psid)	Proof SF	Expected On-Orbit Life (yrs)	Analysis Test or Similarity	Reference Document
TRD Gas Supply System	-	-	-		-	-	-	-			
Xe Storage Vessel*,**	1,680	1550	3000	Worst case thermal environment for on-orbit operations	9300	3.1	4500	1.5	3+2 Cont.	Similarity & Test	MIL-STD-1522A SSP 30559B
CO2 Tank***	813	1100	3200	Worst case thermal environment for on-orbit operations	6800	2.125	4800	1.5	3+2 Cont.	Similarity & Test	MIL-STD-1522A SSP 30559B
Mixing Vessel^	61	200	300	Worst case thermal environment for on-orbit operations	1200	4	450	1.5	3+2 Cont.	Test	MIL-STD-1522A SSP 30559B
TRD Straw Tubes	41 x 430*	14.7-20.4	29.4	Worst case thermal environment for on-orbit operations	>/=58.8	>/=2.0	44.1	1.5	3+2 Cont.	Test	NSTS 1700.7B
Plumbing Lines (3-6mm Stainless)	TBD-Small	1740 max	3200	Worst case thermal environment for on-orbit operations	>/=12800	>/=4.0	>/=4800	>/=1.5	3+2 Cont.	Test	NSTS 1700.7B
Marotta MV 100 Valves	Small	<1550	3000	Worst case thermal environment for on-orbit operations	7500	2.5	4500	1.5	3+2 Cont.	Similarity & Test	NSTS 1700.7B Marotta Spec. SP1200
GP:50 Pressure Sensors	Small	<1550	3000	Worst case thermal environment for on-orbit operations	6000	2.5	4500	1.5	3+2 Cont.	Similarity & Test	NSTS 1700.7B

* There are 41 separate segments of TRD Tubes, each has a volume of 430 in^3

** Same Xe Tank design as for ISS Plasma Contactor Unit (PCU) (ARDE D4636), built and tested by ARDE, Inc.

*** Same as Tank built for X-33 (ARDE D4683), built and tested by ARDE, Inc.

^ Built and tested by ARDE, Inc.

All tube connections are welded, viton o-ring, or metal sealed fittings.

Gas maniforlds and TRD segments connected with PEEK tubing and metal connectors.

Table E2: TCS Pressure System Summary Table

Description	Volume (in^3)	Operating Pressure (psid)	MDP (psid)	MDP Determination	Burst Pressure (psid)	Burst SF	Proof Pressure (psid)	Proof SF	Expected On-Orbit Life (yrs)	Analysis Test or Similarity	Reference Document
Thermal Control System	-	-	-		-	-	-	-			
CO2 Storage Vessel	305	N/A	1305	Worst case thermal environment for on-orbit operations	3263	2.5	1958	1.5	3+2 Cont.	Similarity & Test	MIL-STD-1522A SSP 30559B
Valves/Pumps/Sensors	Small	500-725	1305	Worst case thermal environment for on-orbit operations	3263	2.5	1958	1.5	3+2 Cont.	Similarity & Test	NSTS 1700.7B
Accumulators	61	500-725	1305	Worst case thermal environment for on-orbit operations	3263	2.5	1958	1.5	3+2 Cont.	Test	MIL-STD-1522A SSP 30559B
Plumbing Lines & Fittings (3-6mm Stainless)	TBD-Small	500-725	1305	Worst case thermal environment for on-orbit operations	5352	4.1	1958	1.5	3+2 Cont.	Test	NSTS 1700.7B
Radiator Heat Pipes	TBD	TBD	595	Worst case thermal environment for on-orbit operations	2380	4	738	1.24	3+2 Cont.	Test	NSTS 1700.7B
Capillary Pumped Loop	TBD	TBD	595	Worst case thermal environment for on-orbit operations	4760	8 (TBC)	1190	2	3+2 Cont.	Similarity	NSTS 1700.7B

All tube connections are welded or metal sealed fittings.

Note: Addition information will be provided in the Phase II safety package.

Table E3: Cryomagnet Pressure System Summary Table

Description	Volume (in^3)	Operating Pressure (psid)	MDP (psid)	MDP Determination	Burst Pressure (psid)	Burst SF	Proof Pressure (psid)	Proof SF	Expected On-Orbit Life (yrs)	Analysis Test or Similarity	Reference Document
Cryomagnet System	-	-	-		-	-	-	-			
SFHe Tank	152559	0.3	43.5	Ground Case - Worst case thermal environment caused by complete loss of vacuum at STP	65.25	1.5	47.85	1.1	3 + 2 Cont	Test	MIL-STD-1522A SSP 30559B
Superfluid Cooling Loop Plumbing	TBD-Small	142*	>362.6	Ground Case - Worst case thermal environment caused by complete loss of vacuum at STP	1450.4	4	543.9	1.5	3 + 2 Cont	Test	MIL-STD-1522A SSP 30559B
Cold Buffer Volume Container	TBD-Small	142*	>362.6	Ground Case - Worst case thermal environment caused by complete loss of vacuum at STP	543.9	1.5	398.9	1.1	3 + 2 Cont	Test	NSTS 1700.7B
Warm Plumbing Lines (15 mm max) (Stainless/Copper/Aluminum)	TBD-Small	0.3	>362.6	Ground Case - Worst case thermal environment caused by complete loss of vacuum at STP	TBD	>/= 4.0	TBD	>/= 1.5	3 + 2 Cont	Test	NSTS 1700.7B
Cold Plumbing Lines (15 mm max) (Stainless/Copper/Aluminum)	TBD-Small	0.3	>362.6	Ground Case - Worst case thermal environment caused by complete loss of vacuum at STP	TBD	>/= 4.0	TBD	>/= 1.5	3 + 2 Cont	Test	NSTS 1700.7B
Temp/Pressure Gauges that are in Pressure System	-	TBD	TBD	TBD	TBD	TBD	TBD	TBD	3 + 2 Cont	Analysis	NSTS 1700.7B
Warm Valves (WEKA)	-	TBD	TBD	Ground Case - Worst case thermal environment caused by complete loss of vacuum at STP	TBD	TBD	TBD	TBD	3 + 2 Cont	Test	NSTS 1700.7B
Cold Valves (WEKA), TMP, & PP	-	TBD	TBD	Ground Case - Worst case thermal environment caused by complete loss of vacuum at STP	TBD	TBD	TBD	TBD	3 + 2 Cont	Test	NSTS 1700.7B
Warm He Tank	TBD	TBD	TBD	Worst case thermal environment for on-orbit operations	TBD	TBD	TBD	TBD	3+2 Cont.	Test	MIL-STD-1522A SSP 30559B
Warm Plumbing Lines (15mm max) (Stainless/Copper/Aluminum)	TBD Small	TBD	TBD	Worst case thermal environment for on-orbit operations	TBD	>= 4.0	TBD	>/= 1.5	3+2 Cont.	Test	NSTS 1700.7B
Warm Valves (WEKA)	-	TBD	TBD	Worst case thermal environment for on-orbit operations	TBD	TBD	TBD	TBD	3+2 Cont.	Test	NSTS 1700.7B
Vacuum Case	~140,000 effective volume	-14.7	11.8**	Ground Case - Worst case thermal pressure environment caused by rupture of SFHe Tank into VC	17.7	1.5	11.8	1	3 + 2 Cont	Test	MIL-STD-1522A SSP 30559B

* Maximum during cool down phase Ground Operations

** This is a Vacuum Vessel and the MDP only applies in the event of contingency case