All information contained in this document are property of CARLO GAVAZZI SPACE.
All rights reserved.

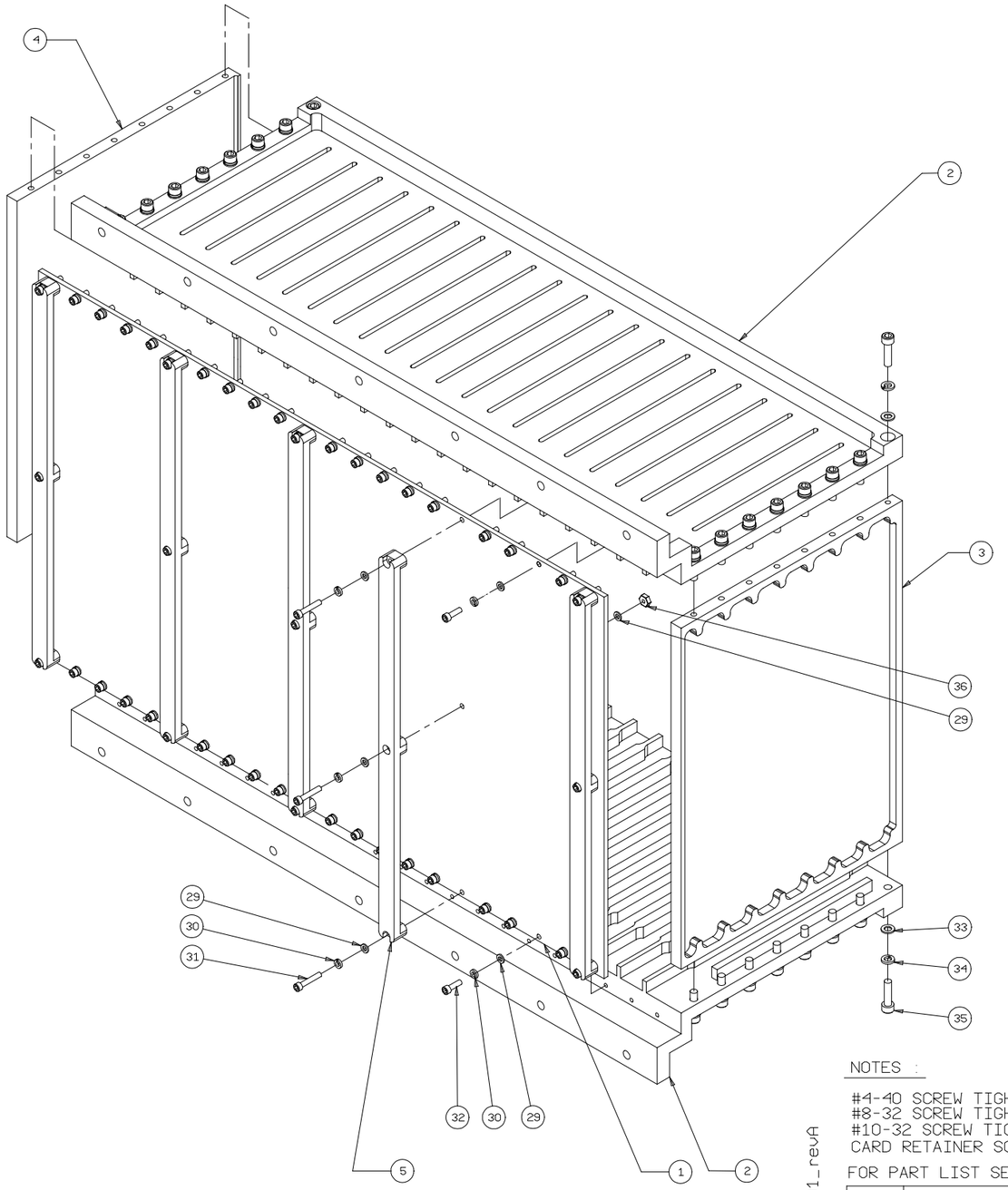

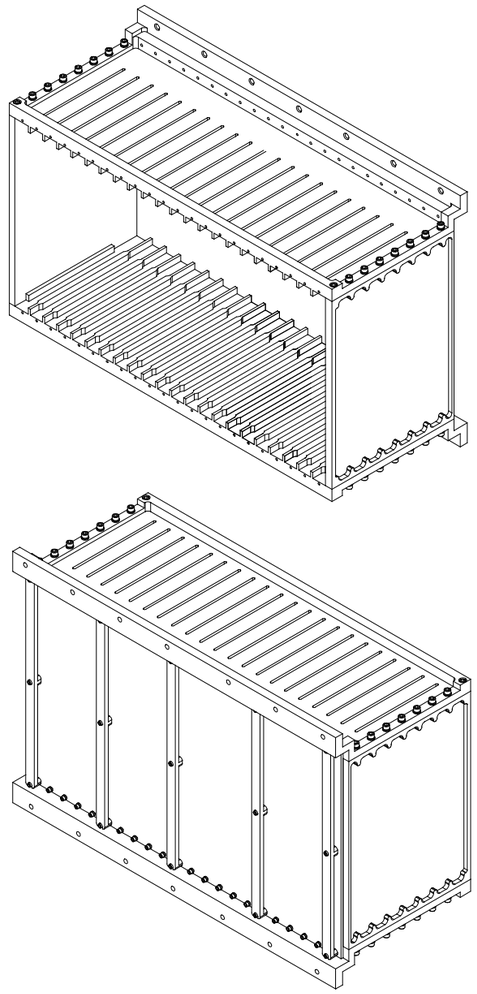

3D OVERVIEWS

NOTES :

#4-40 SCREW TIGHTENING TORQUE : 65 INCH OUNCES
#8-32 SCREW TIGHTENING TORQUE : 13 INCH POUNDS
#10-32 SCREW TIGHTENING TORQUE : 22 INCH POUNDS
CARD RETAINER SCREW TIGHTENING TORQUE : 6 INCH POUNDS

FOR PART LIST SEE DRAWING : 04-AMS-110.01.01

REV	DATE	DRAWN	CHECK	ENG.	PR. ASS.	C. of C.	CHANGE AUTHORITY
A	21/11/2002	HIGHFTECH					
/	02/08/2002	HIGHFTECH					

CUSTOMER ID

EFFECTIVITY

CARLO GAVAZZI SPACE

DRAWING TITLE
AMS 02 - CRATES
CRATE ASSY
(JCRATE)

SCALE NO SCALE

GEN. TOL.

GEN. RA.

CARLO GAVAZZI

HIGHER ASSEMBLY

DRAWING NUMBER 04-AMS-110.00.01

SHEET 1 OF 2

FILE DRAWING: CRATE_ASSY_01_revA

All information contained in this document are property of CARLO GAVAZZI SPACE.
All rights reserved.

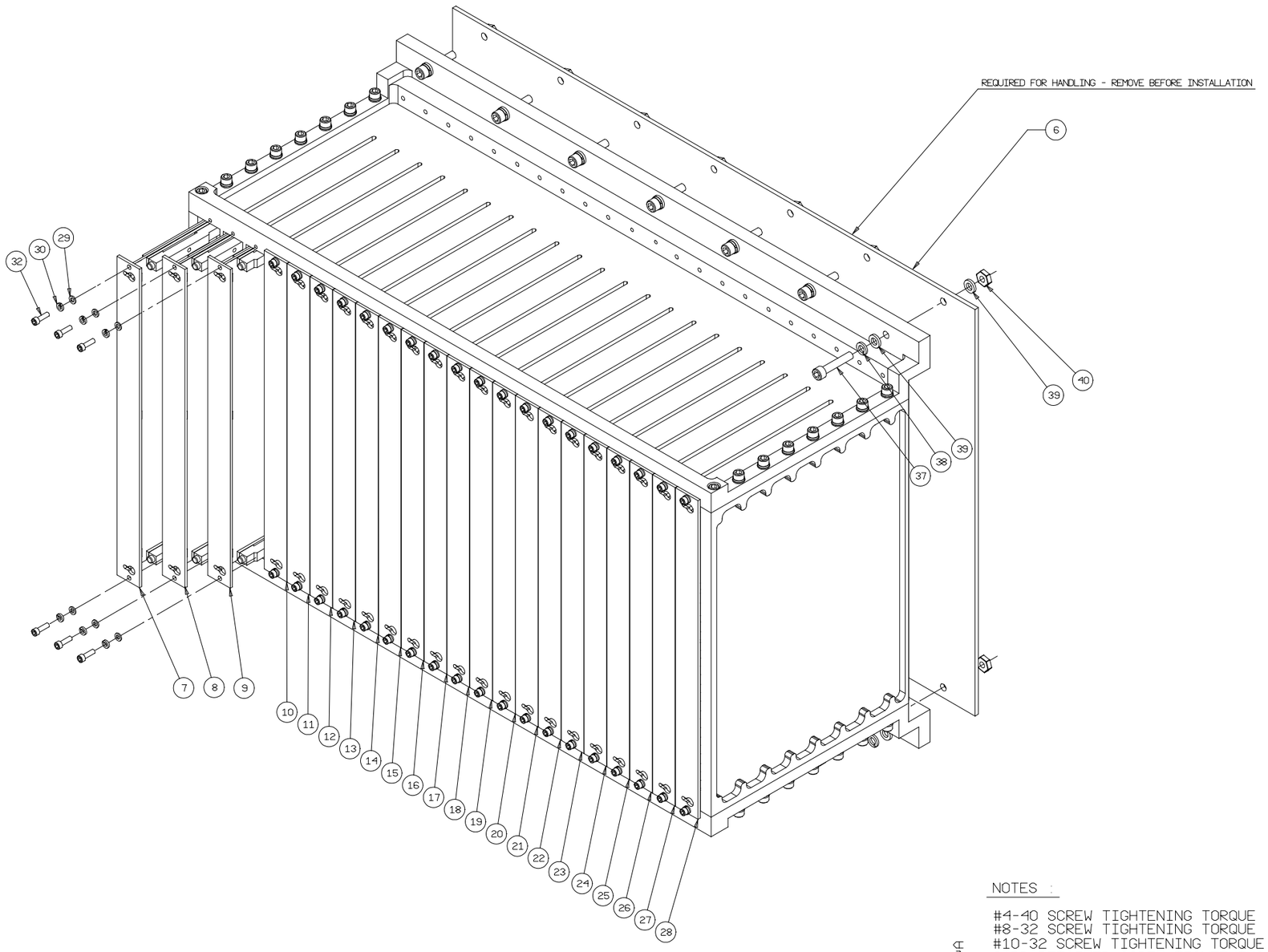

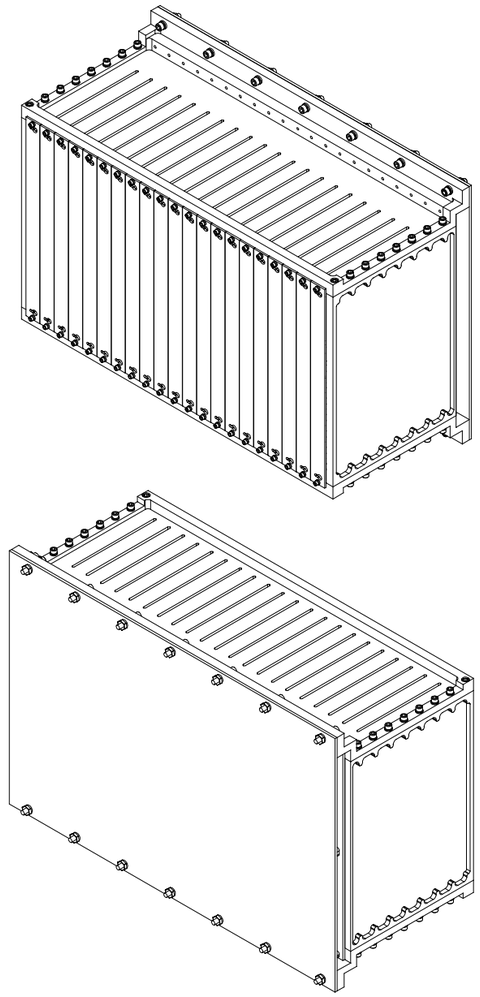

3D OVERVIEWS

NOTES :

#4-40 SCREW TIGHTENING TORQUE : 65 INCH OUNCES
#8-32 SCREW TIGHTENING TORQUE : 13 INCH POUNDS
#10-32 SCREW TIGHTENING TORQUE : 22 INCH POUNDS
CARD RETAINER SCREW TIGHTENING TORQUE : 6 INCH POUNDS

FOR PART LIST SEE DRAWING : 04-AMS-110.01.01

REV	DATE	DRAWN	CHECK	ENG.	PR. ASS.	C. of C.	CHANGE AUTHORITY
A	21/11/2002	HIGHFTECH					
/	02/08/2002	HIGHFTECH					

CUSTOMER ID

EFFECTIVITY

CARLO GAVAZZI SPACE

DRAWING TITLE
AMS 02 - CRATES
CRATE ASSY
(JCRATE)

SCALE NO SCALE

GEN. TOL.

GEN. RA.

CARLO GAVAZZI

HIGHER ASSEMBLY

DRAWING NUMBER 04-AMS-110.00.01

SHEET 2 OF 2

FILE DRAWING: CRATE_ASSY_01_revA