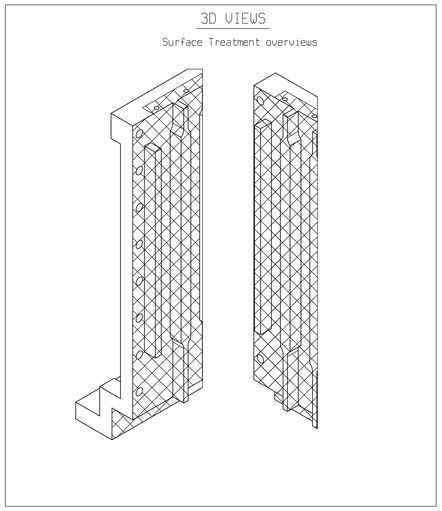

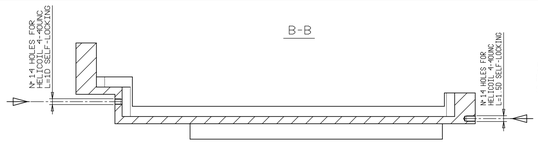

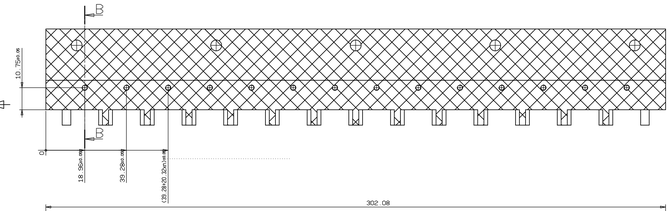

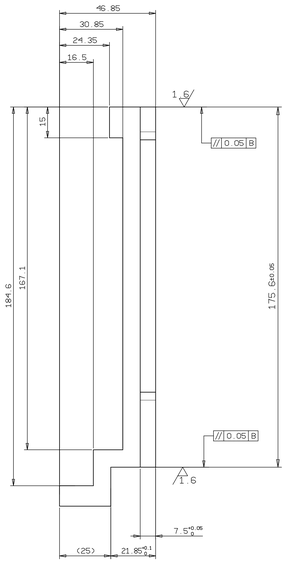

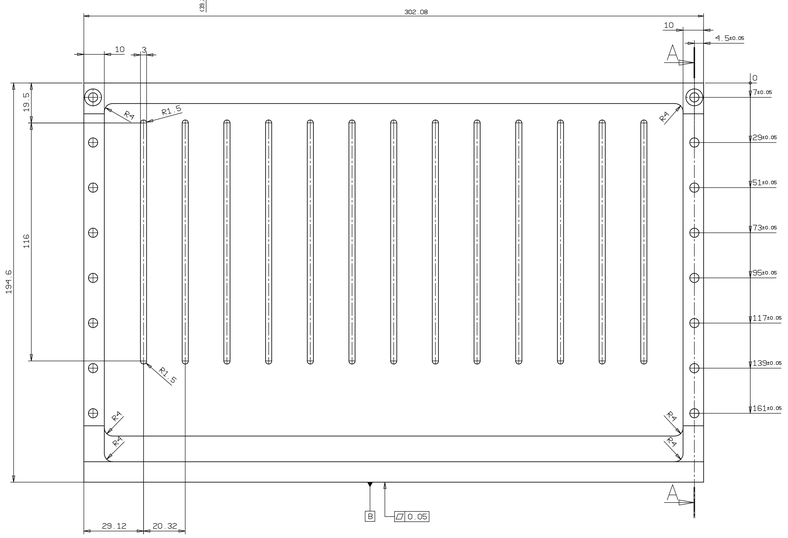

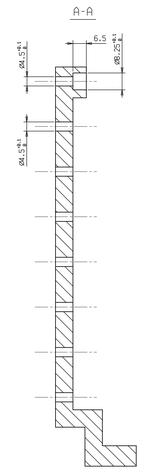

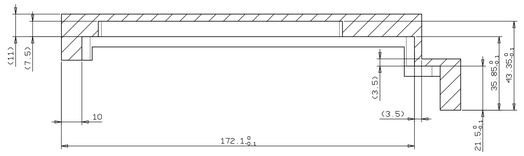

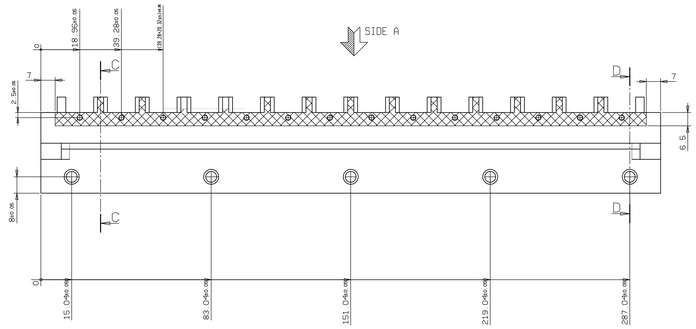

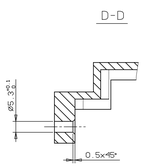

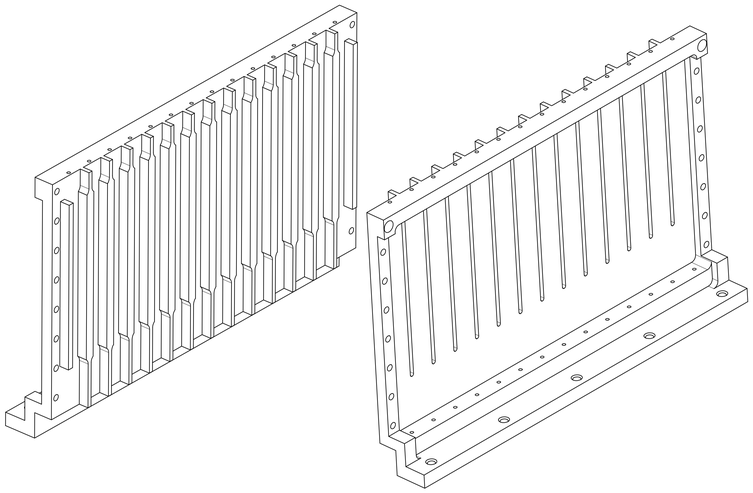

3D OVERVIEWS

(NO SCALE)

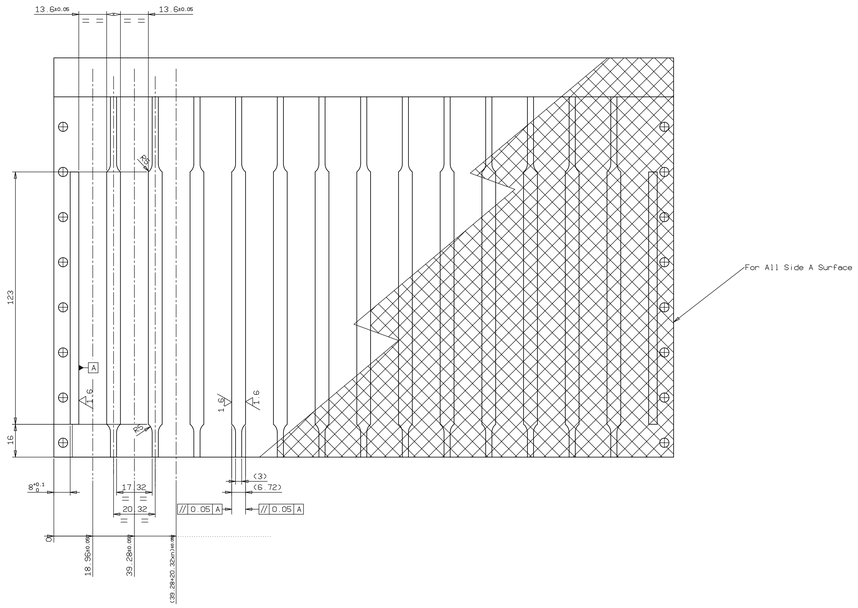

NOTES:
- MATERIAL : AL ALLOY 7075 T7351 SPEC. QQ-A-250/12
- GENERAL SURFACE TREATMENT : CLEAR ANODIZING ACC. TO SPEC. MIL-A-8625 TYPE II CLASS 1
- ▨ LOCAL SURFACE TREATMENT : ALODINE 1200 SPEC. MIL-C-5541 CLASS 3
- REMOVE BURRS AND BREAK SHARP EDGES 0.5X45° ACC. TO DIN 6784
- ⊳ HELI-COIL INSERTION DIRECTION
- INSERT HELI-COIL ACC. TO SPEC. GD-PR-CGS-060
- INSERT HELI-COIL AFTER SURFACE TREATMENT

REV	DATE	DRAWN	CHECK	ENG.	PR. ASS.	C. of C.	CHANGE AUTHORITY
B	08/01/2003	HIGHTECH					
A	03/12/2002	HIGHTECH					
/	08/11/2002	HIGHTECH					

CUSTOMER ID — EFFECTIVITY — CARLO GAVAZZI SPACE

DRAWING TITLE
AMS 02 - CRATES
CRATE MAIN WALL
(JTCRATE)

SCALE 1:1 — GEN. TOL. ISO 2768 f — GEN. RM. 3.2

HIGHER ASSEMBLY 04-AMS-110.00.04 — DRAWING NUMBER 04-AMS-110.03.04 — SHEET 1 OF 1

FILE DRAWING: CRATE_MAIN_WALL_04_rev0

All information contained in this document are property of CARLO GAVAZZI SPACE.
All rights reserved.