All information contained in this document are property of CARLO GAVAZZI SPACE.
All rights reserved.

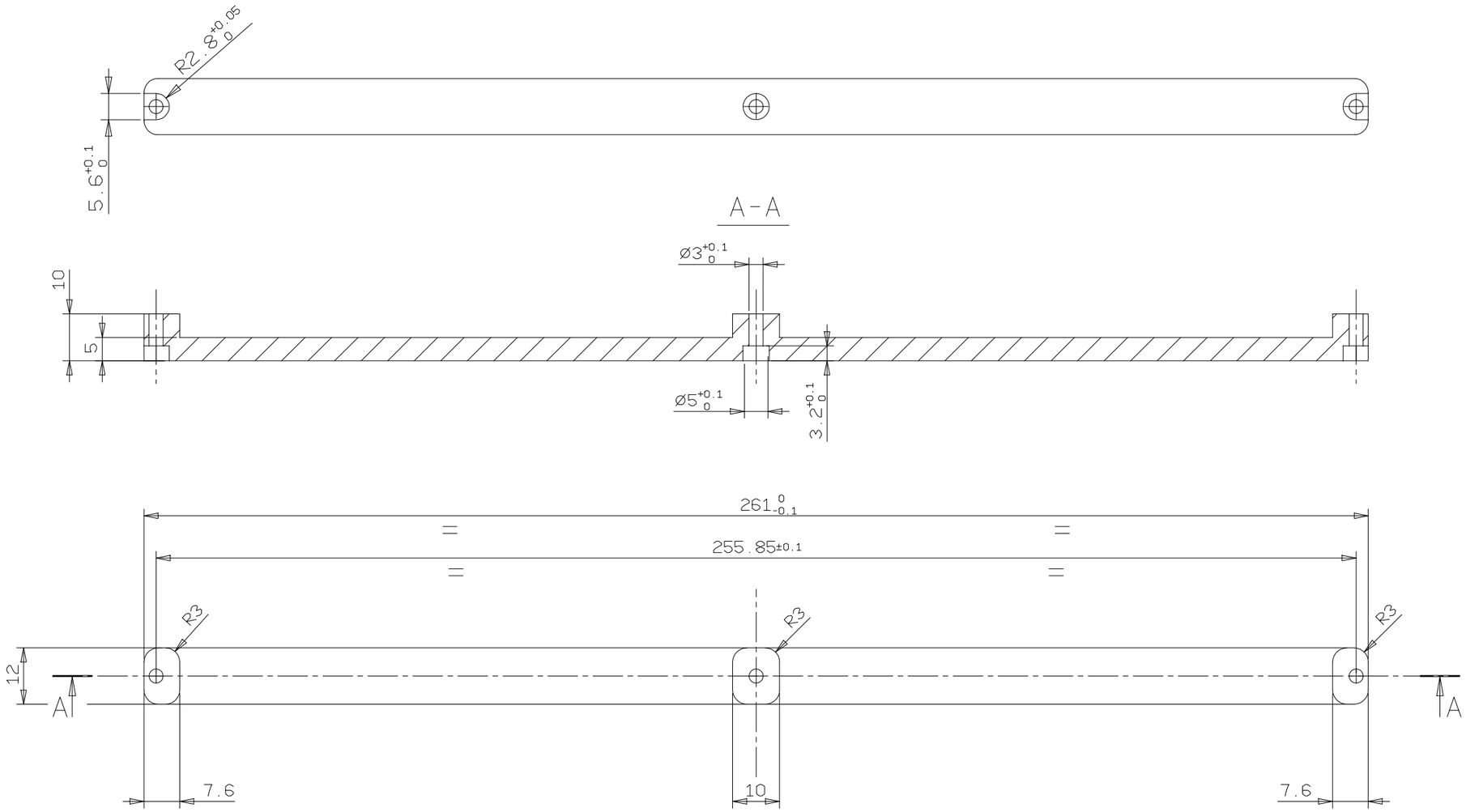

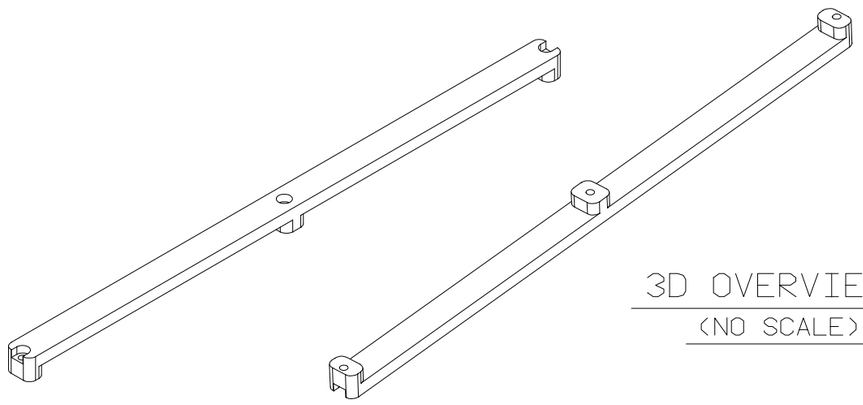

3D OVERVIEWS
(NO SCALE)

FILE DRAWING: CRATE_BACKPLANE_STIFFENER-revA

NOTES:

- MATERIAL : AL ALLOY 7075 T7351 SPEC. QQ-A-250/12
- SURFACE TREATMENT : ALODINE 1200 SPEC. MIL-C-5541 CLASS 3
- REMOVE BURRS AND BREAK SHARP EDGES 0.5X45° ACC. TO DIN 6784

REV	DATE	DRAWN	CHECK	ENG.	PR. ASS.	C. of C.	CHANGE AUTHORITY
A	08/11/2002	HIGHFTECH					
/	22/05/2002	HIGHFTECH					

CUSTOMER ID

EFFECTIVITY

CARLO GAVAZZI SPACE

DRAWING TITLE

AMS 02 - CRATES

CRATE BACKPLANE STIFFENER

SCALE 1:1

GEN. TOL. ISO 2768 f

GEN. RA. 3.2

CARLO GAVAZZI

HIGHER ASSEMBLY

DRAWING NUMBER 04-AMS-110.06.00

SHEET 1 OF 1