ARDE, INC.

500 Walnut Street
Norwood, NJ 07648

Frederic J. Eppling (617) 253-2389/8332
Bldg 44, Rm 109
Massachusetts Institute of Technology
77 Massachusetts Ave.
Cambridge, MA 02139

August 30, 2001

Subject: EG 10330 Rev NC and EG 10331 Rev NC

Reference: P.O. 4500302925

Dear Mr. eppling:

Enclosed for MIT's review and approval please find three copies each of ARDE's Qualification-By-Similarity Reports for the Xenon (EG 10330 Rev NC) and CO_2 (EG 10331 Rev NC) Storage Vessels under referenced purchase order.

Should you have any questions with respect to the foregoing, don't hesitate to call the undersigned at (201) 784-9880.

Very truly yours,

ARDE Inc.

Thomas VanFossen
Contracts Manager

Cc: RW, KS, J/N: 39001

ARDE, INC.
EG 10330, N/C
July 6, 2001

QUALIFICATION BY SIMILARITY REPORT

OF

SPHERE, XENON STORAGE FILAMENT WOUND

PN D4815 TO PN D4636

FOR

TRD GAS SUPPLY SYSTEM

SUBMITTED TO:
Massachusetts Institute of Technology
Laboratory for Nuclear Science
51 Vassar St.
Cambridge, Massachusetts 02139

PREPARED BY:

8/16/01
Aris Escalona

APPROVED BY:

8/20/01
Kirk Sneddon, Engineering

8/20/01
T. Van Fossen, Program Management

ARDE, INC.
500 Walnut Street
Norwood, NJ 07648

ARDE, INC.	TITLE: QUALIFICATION BY SIMILARITY REPORT OF SPHERE, CO2 STORAGE FILAMENT WOUND PN D4816 TO PN D4683 FOR TRD GAS SUPPLY SYSTEM	FORM NO.:	QS 05022
		DATE:	9 JULY 2001
	DOCUMENT NO.: EG 10330	REVISION:	A

ENGINEERING CHANGE RECORD
APPROVALS

Chg	Page	Index	Description	Date	Engr	QA	Mfg	Prog
NC	All	N/A	INITIAL RELEASE EO 2104					

TABLE OF CONTENTS

PARAGRAPH	TITLE	PAGE#
1.0	INTRODUCTION	1
2.0	DISCUSSION	2
3.0	RESULTS	24
4.0	EVALUATION	25
4.1	FABRICATION AND DESIGN	25
4.1.1	MATERIALS AND PROCESSES	25
4.1.2	DESIGN	26
4.1.2.1	LINER DESIGN	26
4.1.2.2	BOSS DESIGN	22
4.1.2.3	FIBERWRAP DESIGN	26
4.2	ADDITIONAL ANALYSIS	29
5.0	REFERENCES	36

LIST OF TABLES

2-1	QUALIFICATION BY SIMILARITY OF D4815 TO D4636	8

LIST OF FIGURES

FIGURE	TITLE	PAGE
2-1	SPHERE, XENON STORAGE FILAMENT WOUND, PN D4815	3
2-2	XENON TANK MOUNTING ASSEMBLY, PN D4817	4
2-3	SPHERE, XENON STORAGE FILAMENT WOUND, PN D4636	5
2-4	BRACKET ASSEMBLY, FIXED END, C4844	6
2-5	BRACKET ASSEMBLY, SLIDING END, C4845	7
2-6	ACCELEROMETER MOUNT LOCATION	11
2-7	D4636 X-AXIS VIBRATION	12
2-8	D4636 X-AXIS VIBRATION	13
2-9	D4636 Z-AXIS VIBRATION	14
2-10	D4636 Z- RANDOM LATERAL LIMIT, R3Z	15

FIGURE	TITLE	PAGE
2-11	D4636 Z- RANDOM LATERAL LIMIT, R4Z	16
2-12	D4636 Z- RANDOM LATERAL LIMIT, R3X	17
2-13	D4636 Z- RANDOM LATERAL LIMIT, R4X	18
2-14	D4636 Z- RANDOM LATERAL RESPONSE, R7	19
2-15	D4636 X- RANDOM AXIAL LIMIT, R3X	20
2-16	D4636 X- RANDOM AXIAL LIMIT, R4X	21
2-17	D4636 X- RANDOM AXIAL RESPONSE, R5X	22
2-18	D4636 X- RANDOM AXIAL RESPONSE, R6X	23
4-1	BOSS INTERFACE, D4815	27
4-2	BOSS INTERFACE, D4636	28
4-3	BRACKET AT 10G AXIAL (1280 LB)	33
4-4	BRACKET AT 10G LATERAL (1280/2 = 640 LB)	34
4-5	BRACKET AT 10G VERTICAL (1280/2 = 640 LB)	35

1.0 INTRODUCTION

This report presents the qualification by similarity of the Sphere, Xenon Storage Filament Wound PN D4815 for TRD xenon gas supply system to the qualified Sphere, Xenon Storage Filament Wound PN D4636 (ref. 1). This report will show compliance of the xenon storage vessel design and its mounting brackets with the Statement of Work for the TDS Gas Supply System of Alpha Magnetic Spectrometer (AMS 02) program per PM 10070 (ref.2) and MIL-STD-1522A (ref.3).

2.0 DISCUSSION

The purpose of this report is to show that the overwrapped pressurant tank design D4815 (figure 2-1) , rated at a maximum design pressure, MDP = 3000 psig, and mounted as shown in D4817 (figure 2-2) is a qualified design by similarity to PN D4636 (figure 2-3). The derivative vessel PN D4815 is designed for xenon storage tank at an MDP of 3000 psig with mount interface points compatible with the MIT TRD Gas Supply System. This unit is identical (except for the mounting boss interface and provision of 1/4⌀ CRES 304L port interfaces) to flight qualified xenon storage tank, PN D4636, which was designed and qualified to the International Space Station's (ISS) xenon storage requirement per Rockwell International specification no. 7RC2849 (ref. 4). This qualification heritage is reported in ARDE's Fracture & Stress Analyses Report EG 10158 (ref. 5) and Qualification Test Report EG 10210 (ref. 6).

The vessels PN D4815 and PN D4636 have the same cryoformed CRES 301 liner design but provide different mounting boss interface details, see figure 2-1 and 2-3. The D4815 mounting reduces external loading from the interfaces used on D4636. PN D4815 and D4636 have exactly the same reinforcing composite matrix, using carbon Toray 1000 fibers impregnated with ARDE HARF 53 resin. Both the Toray T-1000 fiber and the HARF 53 resin are extensively characterized with a significant application base in space flight programs, including numerous manned spaceflight applications.

In the assembly of the tank and brackets figure 2-2, the mounting brackets are the Bracket Assembly, Fixed End per PN C4844 (figure 2-4) & Bracket Assembly, Sliding End per PN C4845 (figure 2-5). Section 4.2.3 will show that these bracket assemblies are structurally adequate to support the 126 lb/g load (17 lb. tank + 109 lb xenon) of the TRD xenon gas supply of AMS 02 program.

The qualification by similarity of D4815 to D4636 design is summarized in table 2-1. Additional evaluations are described in section 4.0.

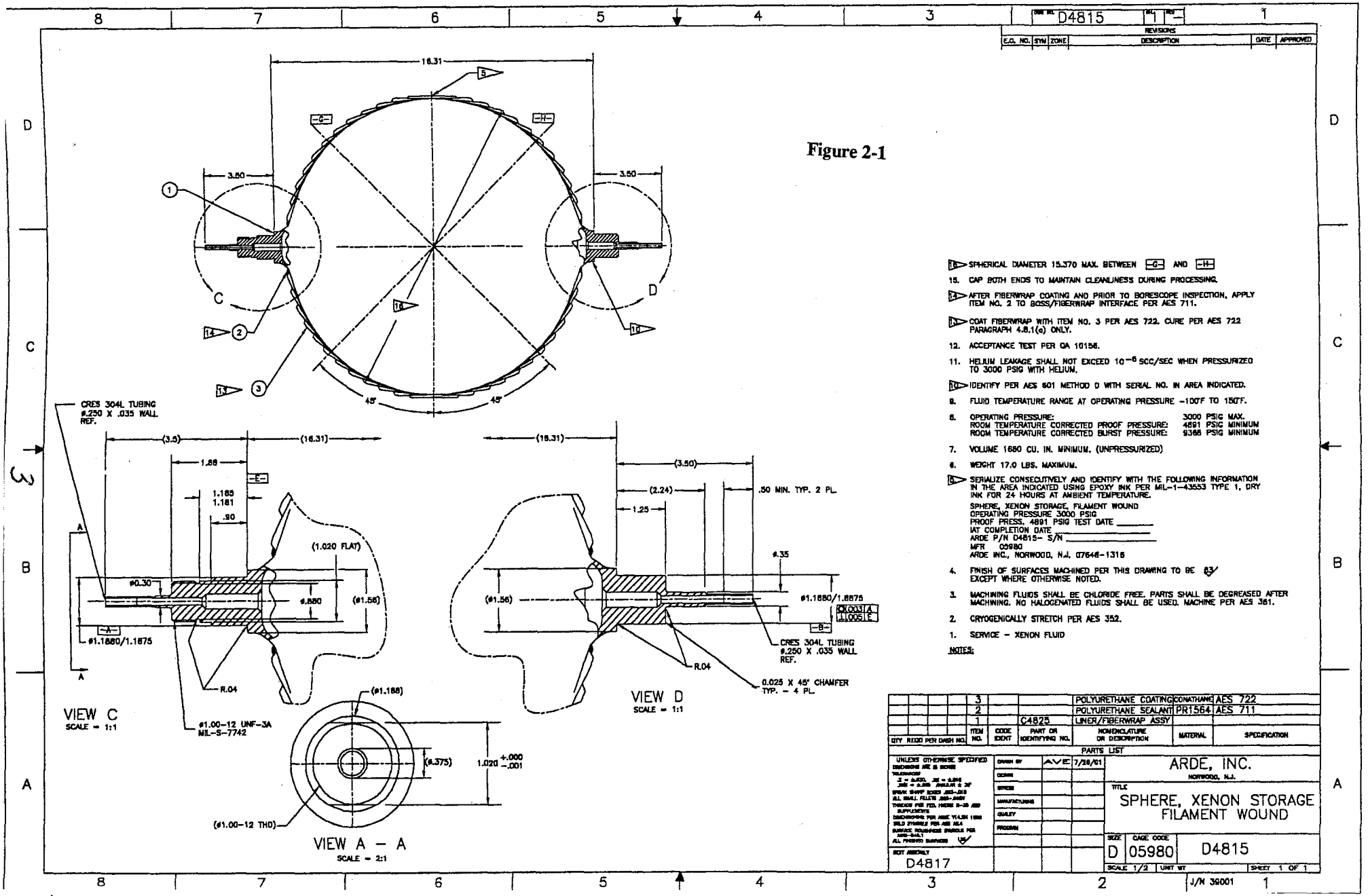

Figure 2-1

16. SPHERICAL DIAMETER 15.370 MAX. BETWEEN -G- AND -H-
15. CAP BOTH ENDS TO MAINTAIN CLEANLINESS DURING PROCESSING.
14. AFTER FIBERWRAP COATING AND PRIOR TO BORESCOPE INSPECTION, APPLY ITEM NO. 2 TO BOSS/FIBERWRAP INTERFACE PER AES 711.
13. COAT FIBERWRAP WITH ITEM NO. 3 PER AES 722. CURE PER AES 722 PARAGRAPH 4.8.1(a) ONLY.
12. ACCEPTANCE TEST PER QA 10156.
11. HELIUM LEAKAGE SHALL NOT EXCEED 10^{-6} SCC/SEC WHEN PRESSURIZED TO 3000 PSIG WITH HELIUM.
10. IDENTIFY PER AES 601 METHOD D WITH SERIAL NO. IN AREA INDICATED.
9. FLUID TEMPERATURE RANGE AT OPERATING PRESSURE -100°F TO 150°F.
8. OPERATING PRESSURE: 3000 PSIG MAX.
   ROOM TEMPERATURE CORRECTED PROOF PRESSURE: 4891 PSIG MINIMUM
   ROOM TEMPERATURE CORRECTED BURST PRESSURE: 9368 PSIG MINIMUM
7. VOLUME 1680 CU. IN. MINIMUM. (UNPRESSURIZED)
6. WEIGHT 17.0 LBS. MAXIMUM.
5. SERIALIZE CONSECUTIVELY AND IDENTIFY WITH THE FOLLOWING INFORMATION IN THE AREA INDICATED USING EPOXY INK PER MIL-I-43553 TYPE 1, DRY INK FOR 24 HOURS AT AMBIENT TEMPERATURE.
   SPHERE, XENON STORAGE, FILAMENT WOUND
   OPERATING PRESSURE 3000 PSIG
   PROOF PRESS. 4891 PSIG TEST DATE _____
   IAT COMPLETION DATE _____
   ARDE P/N D4815- S/N _____
   MFR 05980
   ARDE INC., NORWOOD, N.J. 07648-1316
4. FINISH OF SURFACES MACHINED PER THIS DRAWING TO BE 63 EXCEPT WHERE OTHERWISE NOTED.
3. MACHINING FLUIDS SHALL BE CHLORIDE FREE. PARTS SHALL BE DEGREASED AFTER MACHINING. NO HALOGENATED FLUIDS SHALL BE USED. MACHINE PER AES 361.
2. CRYOGENICALLY STRETCH PER AES 352.
1. SERVICE - XENON FLUID

NOTES:

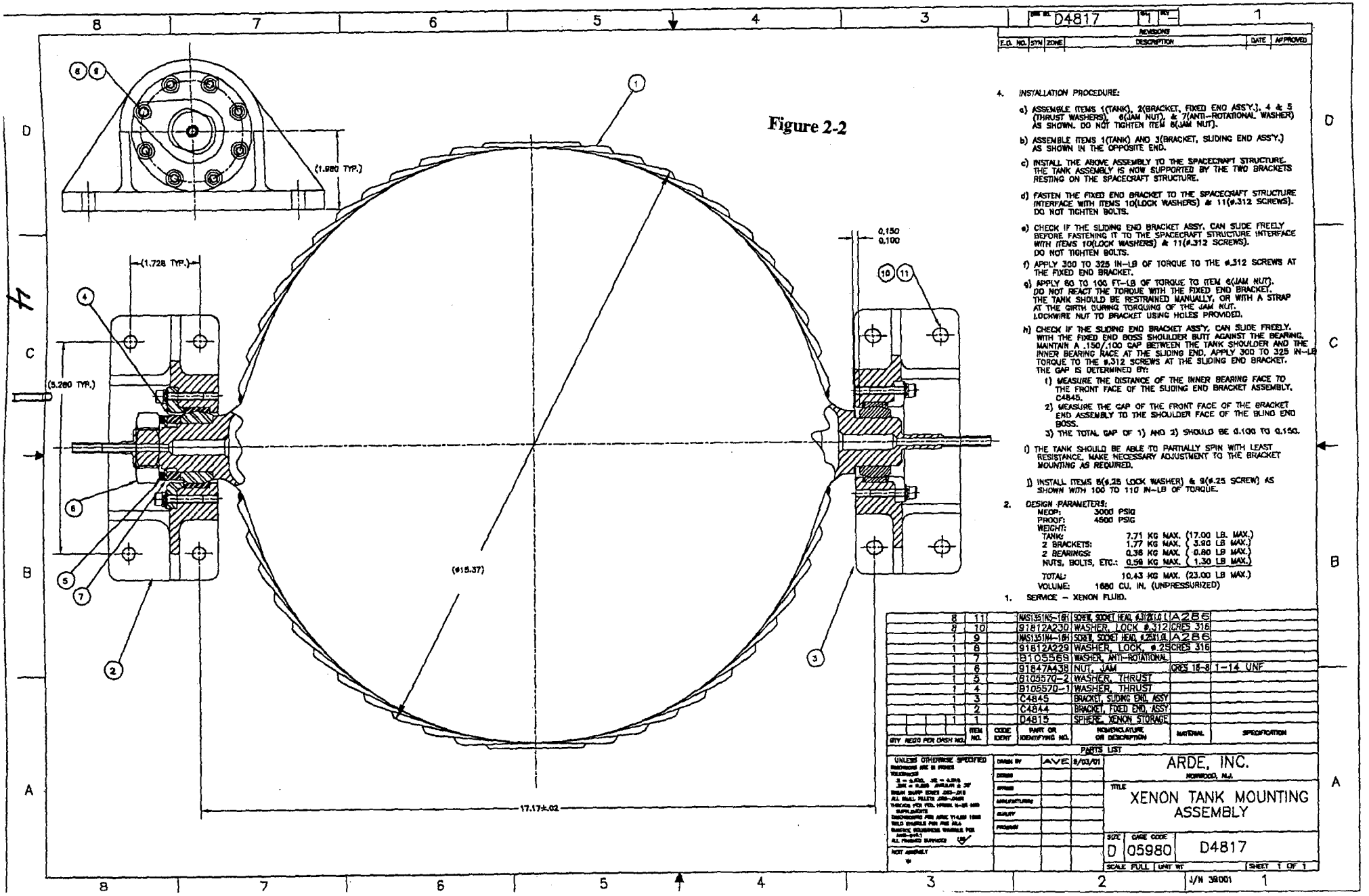

Figure 2-2

REVISIONS					
E.O. NO.	SYM	ZONE	DESCRIPTION	DATE	APPROVED

4. INSTALLATION PROCEDURE:

a) ASSEMBLE ITEMS 1(TANK), 3(BRACKET, FIXED END ASS'Y.), 4 & 5 (THRUST WASHERS), 6(JAM NUT), & 7(ANTI-ROTATIONAL WASHER) AS SHOWN. DO NOT TIGHTEN ITEM 6(JAM NUT).

b) ASSEMBLE ITEMS 1(TANK) AND 3(BRACKET, SLIDING END ASS'Y.) AS SHOWN IN THE OPPOSITE END.

c) INSTALL THE ABOVE ASSEMBLY TO THE SPACECRAFT STRUCTURE. THE TANK ASSEMBLY IS NOW SUPPORTED BY THE TWO BRACKETS RESTING ON THE SPACECRAFT STRUCTURE.

d) FASTEN THE FIXED END BRACKET TO THE SPACECRAFT STRUCTURE INTERFACE WITH ITEMS 10(LOCK WASHERS) & 11(ø.312 SCREWS). DO NOT TIGHTEN BOLTS.

e) CHECK IF THE SLIDING END BRACKET ASSY. CAN SLIDE FREELY BEFORE FASTENING IT TO THE SPACECRAFT STRUCTURE INTERFACE WITH ITEMS 10(LOCK WASHERS) & 11(ø.312 SCREWS). DO NOT TIGHTEN BOLTS.

f) APPLY 300 TO 325 IN-LB OF TORQUE TO THE ø.312 SCREWS AT THE FIXED END BRACKET.

g) APPLY 80 TO 100 FT-LB OF TORQUE TO ITEM 6(JAM NUT). DO NOT REACT THE TORQUE WITH THE FIXED END BRACKET. THE TANK SHOULD BE RESTRAINED MANUALLY, OR WITH A STRAP AT THE GIRTH DURING TORQUING OF THE JAM NUT. LOCKWIRE NUT TO BRACKET USING HOLES PROVIDED.

h) CHECK IF THE SLIDING END BRACKET ASSY. CAN SLIDE FREELY. WITH THE FIXED END BOSS SHOULDER BUTT AGAINST THE BEARING, MAINTAIN A .150/.100 GAP BETWEEN THE TANK SHOULDER AND THE INNER BEARING RACE AT THE SLIDING END. APPLY 300 TO 325 IN-LB TORQUE TO THE ø.312 SCREWS AT THE SLIDING END BRACKET. THE GAP IS DETERMINED BY:
   1) MEASURE THE DISTANCE OF THE INNER BEARING FACE TO THE FRONT FACE OF THE SLIDING END BRACKET ASSEMBLY, C4845.
   2) MEASURE THE GAP OF THE FRONT FACE OF THE BRACKET END ASSEMBLY TO THE SHOULDER FACE OF THE BLIND END BOSS.
   3) THE TOTAL GAP OF 1) AND 2) SHOULD BE 0.100 TO 0.150.

i) THE TANK SHOULD BE ABLE TO PARTIALLY SPIN WITH LEAST RESISTANCE. MAKE NECESSARY ADJUSTMENT TO THE BRACKET MOUNTING AS REQUIRED.

j) INSTALL ITEMS 8(ø.25 LOCK WASHER) & 9(ø.25 SCREW) AS SHOWN WITH 100 TO 110 IN-LB OF TORQUE.

2. DESIGN PARAMETERS:

MEOP:	3000 PSIG	
PROOF:	4500 PSIG	
WEIGHT:		
TANK:	7.71 KG MAX.	(17.00 LB. MAX.)
2 BRACKETS:	1.77 KG MAX.	(3.90 LB MAX.)
2 BEARINGS:	0.36 KG MAX.	(0.80 LB MAX.)
NUTS, BOLTS, ETC.:	0.59 KG MAX.	(1.30 LB MAX.)
TOTAL:	10.43 KG MAX.	(23.00 LB MAX.)
VOLUME:	1680 CU. IN. (UNPRESSURIZED)	

1. SERVICE - XENON FLUID.

QTY. REQ'D PER DASH NO.	ITEM NO.	CODE IDENT	PART OR IDENTIFYING NO.	NOMENCLATURE OR DESCRIPTION	MATERIAL	SPECIFICATION
8	11		MS35265-18H	SCREW, SOCKET HEAD, 6-32 UNC-2A x 1.0 LG	A286	
8	10		91812A230	WASHER, LOCK, ø.312	CRES 316	
1	9		MS35265-18H	SCREW, SOCKET HEAD, 6-32 UNC-2A x 1.0 LG	A286	
1	8		91812A229	WASHER, LOCK, ø.25	CRES 316	
1	7		B105569	WASHER, ANTI-ROTATIONAL		
1	6		91847A438	NUT, JAM	CRES 18-8	1-14 UNF
1	5		B105570-2	WASHER, THRUST		
1	4		B105570-1	WASHER, THRUST		
1	3		C4845	BRACKET, SLIDING END, ASSY		
1	2		C4844	BRACKET, FIXED END, ASSY		
1	1		D4815	SPHERE, XENON STORAGE		

PARTS LIST

UNLESS OTHERWISE SPECIFIED

DRAWN BY	AVE	8/03/01
DESIGN		
STRESS		
MANUFACTURING		
QUALITY		
PROGRAM		

ARDE, INC.
NORWOOD, N.J.

TITLE
XENON TANK MOUNTING ASSEMBLY

SIZE	CAGE CODE	
D	05980	D4817

SCALE FULL | UNIT WT | SHEET 1 OF 1

J/N 38001

Figure 2-3

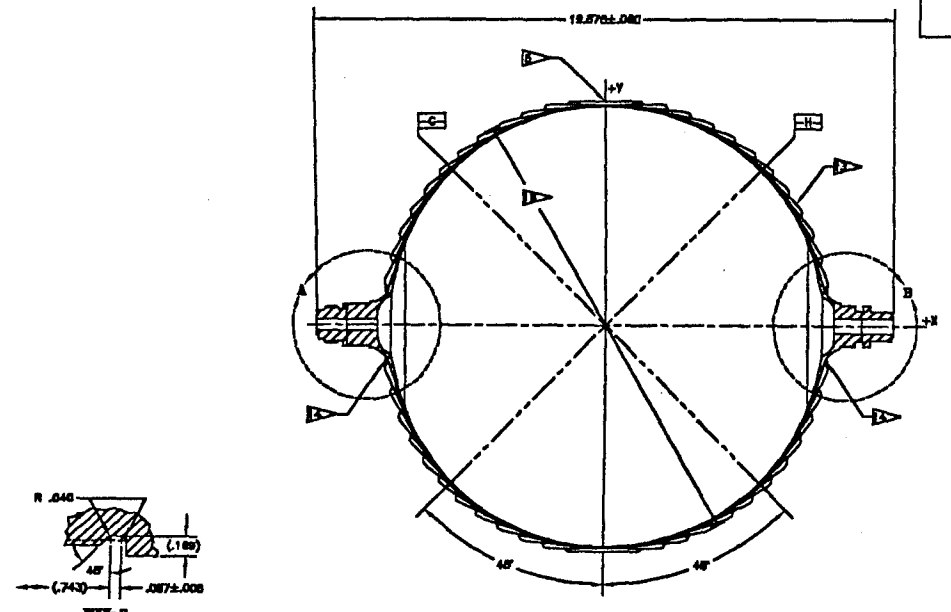

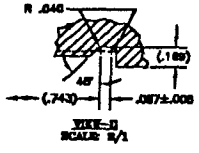

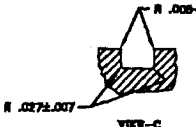

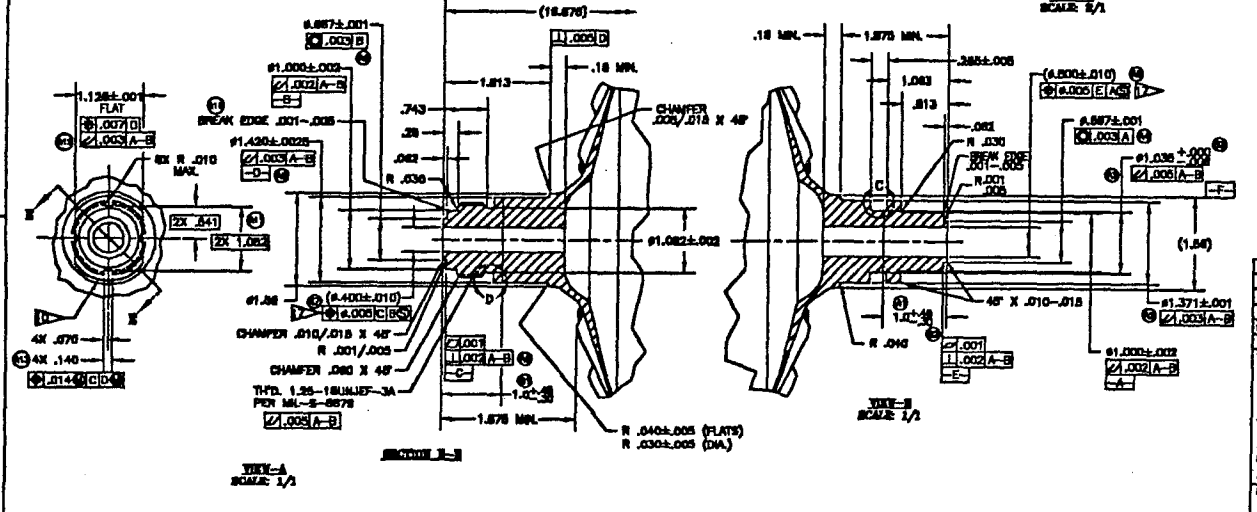

REVISIONS					
E.C.I. NO.	SYM	ZONE	DESCRIPTION	DATE	APPROVED
	C	C3	1. NOTE–18 WAS FOR –1: 7RE2648 FOR –2: RE2648	UNKNOWN 5/21/97	L.KUNZ S.BERNO A.ESCALONA J.EHALT
		B3	2. ADDED MFR .03680 TO NOTE–5.		
		B3	3. REMOVED "CUSTOMER" FROM S/N & P/N IN NOTE–6.		
		C3	4. ADDED NOTE–18.		

D4636 | 1 | C

REVISIONS					
E.C.I. NO.	SYM	ZONE	DESCRIPTION	DATE	APPROVED
1660	A	A5	1. DIM. 1.0±.3 WAS 1.1±.3	UNKNOWN 4/24/97	L.KUNZ A.ESCALONA J.EHALT K.SWEDOCK
		A4	2. DIM. Ø1.377 WAS Ø1.373.		
		B4	3. ON Ø1.435 Ⓜ .003 A–B WAS ⌭ .015 A–B		
		B4	4. ON Ø.887 Ⓜ .003 A WAS ⌭ .003 A–B		
		B4	5. ON (.500) Ⓜ .005 E AS WAS ⌭ .003 E–B		
		A5	6. (1.000 A–B WAS (1.000 B		
		A7	7. ON (.400) Ⓜ .005 C B WAS ⌭ .005 B–C		
		B7	8. ON Ø1.420 ⌭ .003 A–B WAS ⌭ .005 A–B		
		B7	9. ON Ø.887 Ⓜ .003 B WAS ⌭ .003 A–B		
		B7	10. ADDED BREAK EDGE .001–.005		
		A7	11. MADE DIM'S .341 & 2X 1.082 BASIC DIM'S		
		B6	12. ADDED ⌭ .003 A–B TO DIM 1.126 FLAT		
		A6	13. ON 4 X .140 Ⓜ .01 C B Ⓢ WAS Ⓜ .01 B		
		C3	14. IN NOTE–17, TRUE POSITION WAS RUNOUT		
		C3	15. IN NOTE–8, –45° WAS –45°		
1660	B	A6	1. IN VIEW–A, DIM. 1.0 +.45/–.30 WAS 1.0±.3	UNKNOWN 10/31/97	L.KUNZ A.ESCALONA J.EHALT S.BERNO
		A5	2. IN VIEW–B, DIM. 1.0 +.45/–.30 WAS 1.0±.3		
		B4	3. DIM. Ø1.636 +.000/–.008 WAS +.000/–.004		

(24) 11 ▷ CUSTOMER SUPPLIED SERIAL NUMBER.

(21) 2 ▷ FOR –1: 02802300N7RE2648
FOR –2: 02802300NRE2648

(17) 17 ▷ TRUE POSITION REQUIRED ONLY INTO PORT BY .38.

10 ▷ SPHERICAL DIAMETER 18.370 MAX. BETWEEN –C– AND –H–

16. CAP BOTH ENDS TO MAINTAIN CLEANLINESS DURING PROCESSING.

14 ▷ AFTER FIBERWRAP COATING AND PRIOR TO BORESCOPE INSPECTION, APPLY ITEM NO. 2 TO BOSS/FIBERWRAP INTERFACE PER AES 711.

15 ▷ COAT FIBERWRAP WITH ITEM NO. 3 PER AES 722. CURE PER AES 722 PARAGRAPH 4.6.1(a) ONLY.

12. ACCEPTANCE TEST PER QA 10088.

11. HELIUM LEAKAGE SHALL NOT EXCEED 10^{-7} SCC/SEC WHEN PRESSURIZED TO 3000 PSIG WITH HELIUM.

18 ▷ IDENTIFY PER AES 601 METHOD D WITH SERIAL NO. IN AREA INDICATED.

(23) 9. FLUID TEMPERATURE RANGE AT OPERATING PRESSURE –65°F TO 150°F.

8. OPERATING PRESSURE: 3000 PSIG MAX.
ROOM TEMPERATURE CORRECTED PROOF PRESSURE: 4861 PSIG MINIMUM
ROOM TEMPERATURE CORRECTED BURST PRESSURE: 6368 PSIG MINIMUM

7. VOLUME 1660 CU. IN. MINIMUM. (UNPRESSURIZED)

6. WEIGHT 17.0 LBS. MAXIMUM.

(22) (20) 5 ▷ SERIALIZE CONSECUTIVELY AND IDENTIFY WITH THE FOLLOWING INFORMATION IN THE AREA INDICATED USING EPOXY INK PER MIL–I–43553 TYPE 1, DRY INK FOR 24 HOURS AT AMBIENT TEMPERATURE.

SPHERE, XENON STORAGE, FILAMENT WOUND
OPERATING PRESSURE 3000 PSIG
PROOF PRESS. 4861 PSIG TEST DATE _____
BT COMPLETION DATE _____
ARDE P/N D4636–___ S/N _____
S/N 19
MFR 13693
ARDE INC., NORWOOD, N.J. 07648–1316

4. FINISH OF SURFACES MACHINED PER THIS DRAWING TO BE 63 EXCEPT WHERE OTHERWISE NOTED.

3. MACHINING FLUIDS SHALL BE CHLORIDE FREE. PARTS SHALL BE DEGREASED AFTER MACHINING. NO HALOGENATED FLUIDS SHALL BE USED. MACHINE PER AES 361.

2. CRYOGENICALLY STRETCH PER AES 302.

1. SERVICE – XENON FLUID

NOTES:

FRACTURE CRITICAL ITEM

ITEM NO.	CODE IDENT	PART OR IDENTIFYING NO.	NOMENCLATURE OR DESCRIPTION	MATERIAL	SPECIFICATION
3			POLYURETHANE COATING	CONATHANE	AES 722
2			POLYURETHANE SEALANT	PR1594	AES 711
1		D4635	LINER, FIBERWRAP		

QTY NEED PER DASH NO. –2 –1 1 1

PARTS LIST

UNLESS OTHERWISE SPECIFIED
DIMENSIONS ARE IN INCHES
TOLERANCES
X = ±.030 .XX = ±.010
.XXX = ±.005 ANGLES = ±1°
BREAK SHARP EDGES .005–.015
ALL SMALL FILLETS .005–.015
THREAD PER FED HDBK H–28 AND SUPPLEMENTS
DIMENSIONS PER ANSI Y14.5–1982
WELD SYMBOLS PER AWS A2.4
SURFACE ROUGHNESS SHALL BE 250 (63)
ALL FINISH SYMBOLS

NEXT ASSEMBLY

DRAWN BY	L.KUNZE	4/24/96
DESIGN		
ENGR. APPR.	K.SWEDOCK	3/19/97
STRESS APPR.		
PROD. APPR.	L.KUNZ	3/6/97
QUAL. APPR.		
QTY	J.EHALT	3/6/97
ENGR. APPROVAL	S.BERNO	3/6/97
PROD. APPR.		
SEL–TEST FOR EA. ASSY.		

ARDE, INC.
NORWOOD, N.J.

TITLE
SPHERE, XENON STORAGE
FILAMENT WOUND

SIZE D | CAGE CODE 05980 | D4636

SCALE 1/2 | UNIT VT | SHEET 1 OF 1

J/N 83038

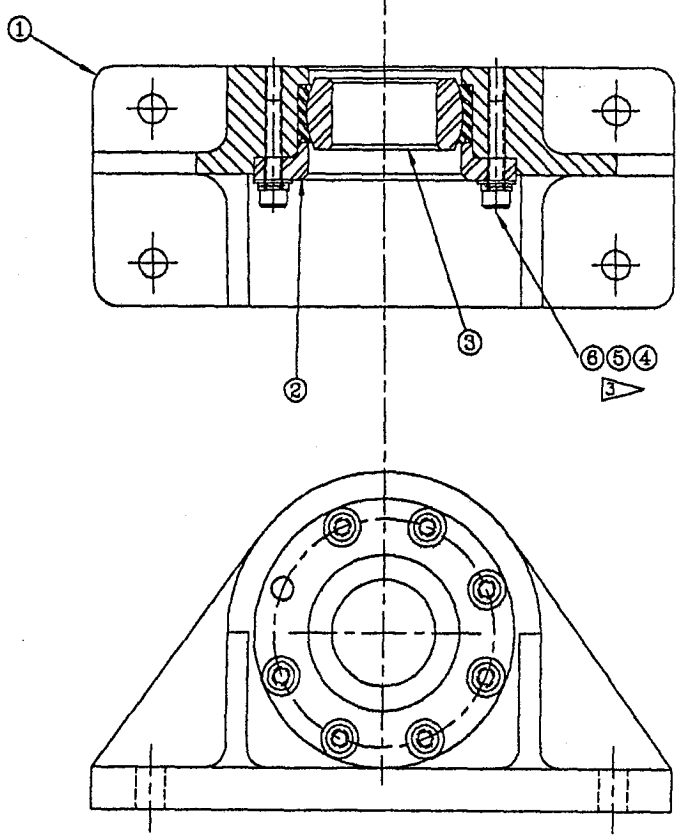

Figure 2-4

6. NYLON BAG, PURGE WITH NITROGEN, SEAL ASSEMBLY.
5. CLEAN ASSEMBLY PER SN-C-0005, VISIBLY CLEAN LEVEL 2.
4. ITEMS #4 & #5 (WASHERS) SHALL BE PASSIVATED PER AES 254 PRIOR TO ASSEMBLY.

3 APPLY TORQUE AT 35-40 IN.-LB. TO THE SCREWS AT 180° CLOCKING SEQUENCE.

2. PRESS FIT BEARING INTO BRACKET BORE.

1 IDENTIFY PER AES 601, METHOD D.

NOTES:

QTY REQD PER DASH NO.	ITEM NO.	CODE IDENT	PART OR IDENTIFYING NO.	NOMENCLATURE OR DESCRIPTION	MATERIAL	SPECIFICATION
7	6		NAS1351N3-16H	SCREW, SOC. HD. CAP	A286	#10-32 X 1.0 LG.
7	5		91812A227	LOCK WASHER, #10	CRES 316	
7	4		90107A011	WASHER, FLAT #10	CRES 300	
1	3		BAN-19446	BEARING	INCONEL	SOUTHWEST PRODUCTS
1	2		B105567	RETAINER, FIXED END		
1	1		D105565	BRACKET, FIXED END		

PARTS LIST

REVISIONS

E.O. NO.	SYM	ZONE	DESCRIPTION	DATE	APPROVED

UNLESS OTHERWISE SPECIFIED
DIMENSIONS ARE IN INCHES
TOLERANCES
.X = ±.030, .XX = ±.010
.XXX = ±.005 ANGULAR ± 30'
BREAK SHARP EDGES .003-.016
ALL SMALL FILLETS .030-.040R
THREADS PER FED. HNDBK H-28 AND SUPPLEMENTS
DIMENSIONING PER ANSI Y14.5M-1982
WELD SYMBOLS PER AWS A2.4
SURFACE ROUGHNESS SYMBOLS PER ANSI-B46.1
ALL FINISHED SURFACES 125

NEXT ASSEMBLY
D4817

DRAWN BY	AVE	8/08/01
CHECKER		
DES. ENG'R		
STRESS ENG'R		
PROG. ENG'R		
MATL. ENG'R		
MFG		
QUAL. CONTROL		
PROG. MGR		

ARDE, INC.
NORWOOD, N.J.

TITLE
BRACKET ASSEMBLY
FIXED END

SIZE	CAGE CODE	
C	05980	C4844

SCALE 1:1 | UNIT WT | SHEET 1 OF 1

J/N 39001

DWG NO C4844 REV -
SH 1

REVISIONS					
E.O. NO.	SYM	ZONE	DESCRIPTION	DATE	APPROVED

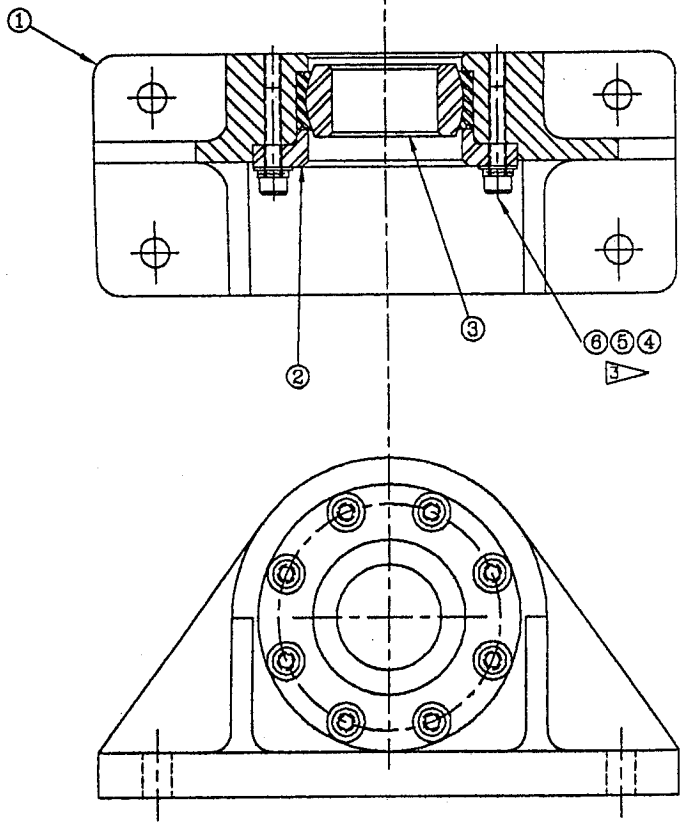

Figure 2-5

6. NYLON BAG, PURGE WITH NITROGEN, SEAL ASSEMBLY.
5. CLEAN ASSEMBLY PER SN-C-0005, VISIBLY CLEAN LEVEL 2.
4. ITEMS #4 & #5 (WASHERS) SHALL BE PASSIVATED PER AES 254 PRIOR TO ASSEMBLY.

3. APPLY TORQUE AT 35-40 IN.-LB. TO THE SCREWS AT 180° CLOCKING SEQUENCE.

2. PRESS FIT BEARING INTO BRACKET BORE.

1. IDENTIFY PER AES 601, METHOD D.

NOTES:

QTY REQD PER DASH NO.	ITEM NO.	CODE IDENT	PART OR IDENTIFYING NO.	NOMENCLATURE OR DESCRIPTION	MATERIAL	SPECIFICATION
8	6		NAS1351N3-16H	SCREW, SOC. HD. CAP	A286	#10-32 X 1.0 LG.
8	5		91812A227	LOCK WASHER, #10	CRES 316	
8	4		90107A011	WASHER, FLAT #10	CRES 300	
1	3		BAN-19446	BEARING	INCONEL	SOUTHWEST PRODUCTS
1	2		B105568	RETAINER, SLIDING END		
1	1		D105566	BRACKET, SLIDING END		

PARTS LIST

UNLESS OTHERWISE SPECIFIED
DIMENSIONS ARE IN INCHES
TOLERANCES
.X = ±.030, .XX = ±.010
.XXX = ±.005 ANGULAR ± 30'
BREAK SHARP EDGES .003-.015
ALL SMALL FILLETS .020-.040R
THREADS PER FED. HNDBK H-28 AND SUPPLEMENTS
DIMENSIONING PER ANSI Y14.5M-1982
WELD SYMBOLS PER AWS A2.4
SURFACE ROUGHNESS SYMBOLS PER ANSI-B46.1
ALL FINISHED SURFACES 125

NEXT ASSEMBLY
D4817

DRAWN BY	AVE	8/08/01
CHECKER		
DES. ENG'R		
STRESS ENG'R		
PROG. ENG'R		
MATL. ENG'R		
MFG		
QUAL. CONTROL		
PROG. MGR		

ARDE, INC.
NORWOOD, N.J.

TITLE
BRACKET ASSEMBLY
SLIDING END

SIZE	CAGE CODE	
C	05980	C4845

SCALE 1:1 | UNIT WT | SHEET 1 OF 1

J/N 39001

DWG NO C4845 SH 1 REV —

Table 2-1 Qualification by Similarity of PN D4815 to PN D4636

Test	PN D4815 TRD requirements	PN D4636 Qual EG 10210 (Ref. 6)	Remarks
MDP	3000 psig	3000 psig	Similar - Acceptable
Proof	4500 psig	4892 psig/5 minutes	D4636 exceeded D4815 - Acceptable
External Leak	$1x10^{-5}$ sccs He max. @ 3000 psig	$1x10^{-7}$ sccs He max. @ 3000 psig	D4636 is stringent than D4815- Acceptable
Fluid	Xenon	Xenon	Similar - Acceptable
Internal Volume	1680 cu. in. min.	1680 cu. in. min.	Similar - Acceptable
Weight	17.0 lb maximum	17.0 lb. maximum	Similar - Acceptable
Cleanliness	Level 100 A	Level 25 A	Similar - Acceptable
Temperature	-100° to 150°F	-65° to 150°F	Similar - Acceptable - note that autofrettage of both designs are performed at cryogenic temperature of -320°F and 7250 psig. The HARF 53 resin has a dry Tg of 277°F and a wet Tg of 255°F. Other ARDE applications utilizing the materials at higher stress levels are qualified for 200°F max service temperature.
Random Vib.	8.9 grms at .08 g^2/hz	8.9 grms at .08 g^2/hz	Similar - Acceptable
First Mode	>50 Hz	Lateral @ 150 Hz Axial @ 200 Hz	Similar - Acceptable
Life Cycle	0-3000-0 psi -100 cycles	0-5180-0 psi - 52 cycles 0-3000-0 psi - 24 cycles	Although the D4636 was tested for a total of 76 cycles (less than the 100 cycles MDP D4815 requirement), the fatigue damage from the higher pressure is worst in D4636 than D4815 as analyzed in section 4.2.2, therefore D4815 is adequate.
Burst	2xMDP=6000 psig	9368 psi - no rupture Ruptured @ 12500 psi	Since D4636 ruptured @ 4.1xMDP, D4815 design is therefore adequate

Evaluation of vibration response data from the formal D4636 qualification testing shows that vibration inputs measured at the tank bosses are well in excess of Liftoff and Load Factors for MS-02 Components.

Figure 2.6 shows the accelerometer mount location for the vibration testing performed on the D4636 vessel. The input levels specified for the D4636 qualification were applied on the vibration table baseplate. The tank was tested with the flight support brackets from the prior application. The transmissibility of these customer supplied pedestal mounting bracket contributed significantly to the loads into the vessel in qualification. This is strong justification for the bracket design shown in section 4.2.3, which will provide significantly less amplification under the dynamic excitation environments, particularly in the damaging low/mid frequency regime. This mount bracket change will reduce the loading on the tank and TRD structure for the TRD application. Test photographs are shown in figures 2-7 through 2-9.

Axial Axis

The R3 accelerometer was mounted adjacent the fixed end boss of the D4646. The R4 accelerometer was mounted adjacent to the slide end boss. Inline input was 19.2 g_{rms} and 15.1 g_{rms} inline at the fixed and slide end in the axial vibration test This is shown in figure 2-10 and 2-11. Cross talk was extremely high at 15.8 and 17.5 grms at fixed and slide end, illustrating the compliance in the mount brackets, as shown in 2-12 and 2-13. The tank response was 28.9 g's at the 1 sigma level (86.7 g's peak in line response.) This is shown in figure 2-14. All values in this axis are well in excess of the TRD load spectrum.

Lateral Axis

In the Z axis the fixed end showed more reasonable coupling to baseplate, the slide end however has high dynamic amplification, associated high local rotational compliance of the mount bracket and the use of an elastomeric o-ring on the boss used for axial slide accommodation between the bracket and tank. Much of the energy at the slide end is associated with the high frequency rotational response mode of the bracket, see figures 2-15 and 2-16. Tank response in the lateral mode exhibits classical single DOF behavior with a unmistakable first resonance at just over 100 hz. Response at the top and side of the tank, measured at 27.4 and 19 g_{rms} (82.2 and 57 g peak), figure 2-17 and 2-18 are also well in excess of TRD load requirements.

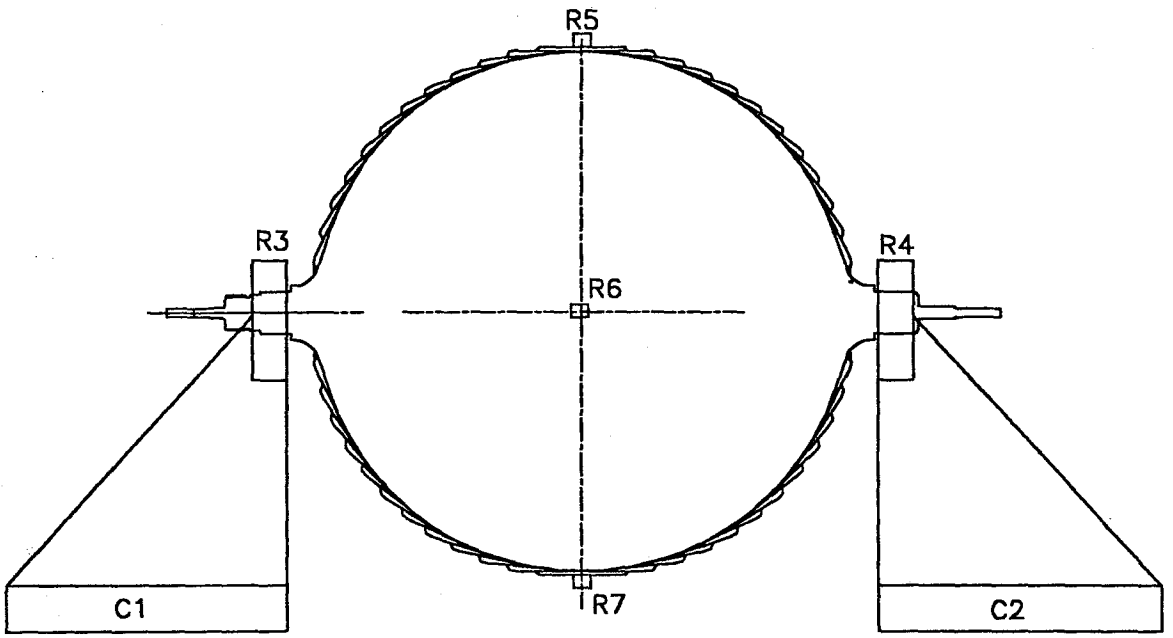

Figure 2-6 ACCELEROMETER MOUNT LOCATION ON D4636 AT QUAL VIBRATION

ARDE INCORPORATED P.O. NO. 0047730

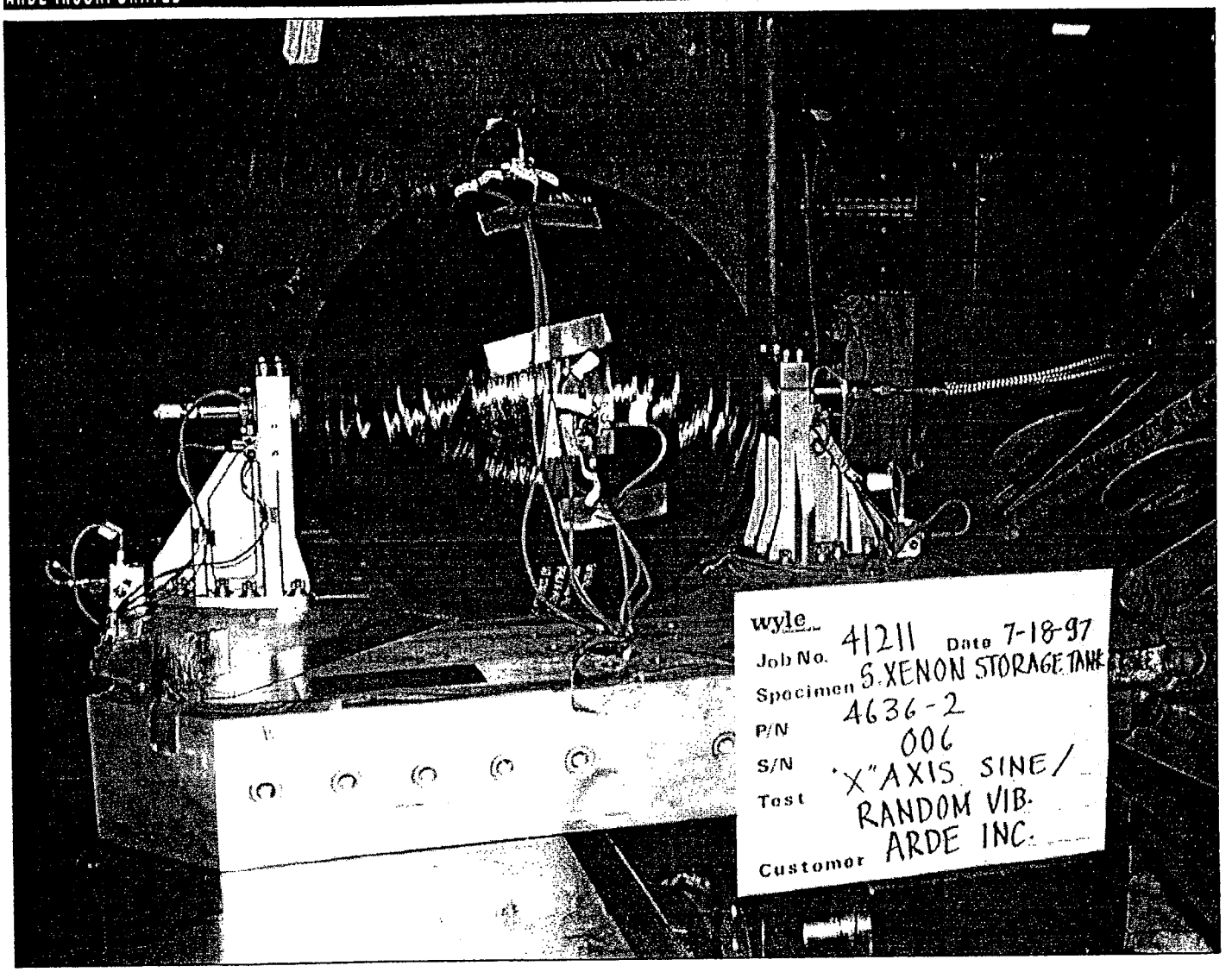

PHOTOGRAPH 7

"X" AXIS VIBRATION TEST INSTALLATION

Figure 2-7

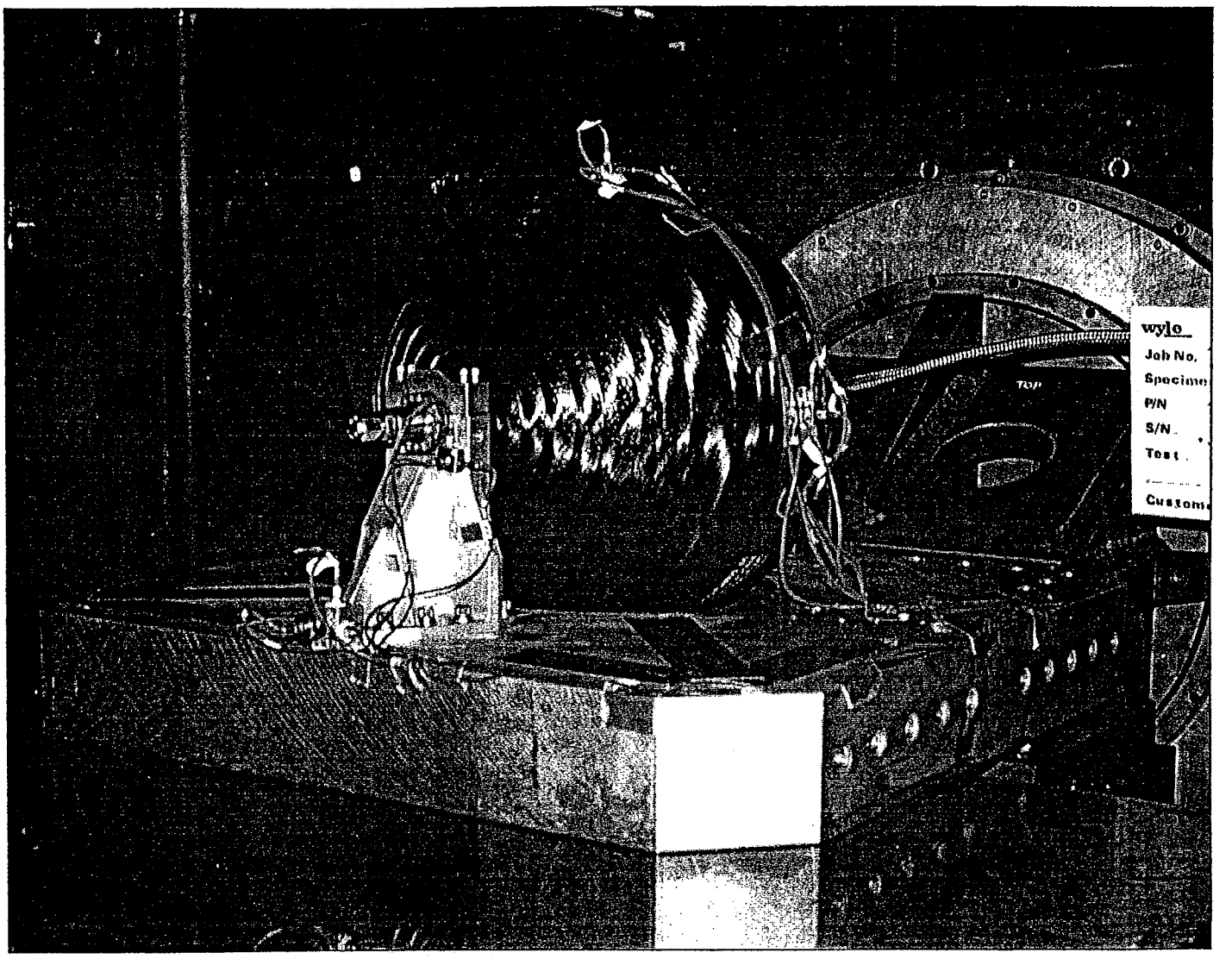

PHOTOGRAPH 6

"X" AXIS VIBRATION TEST INSTALLATION

Figure 2-8

ARDE INCORPORATED P.O. NO. 0047730

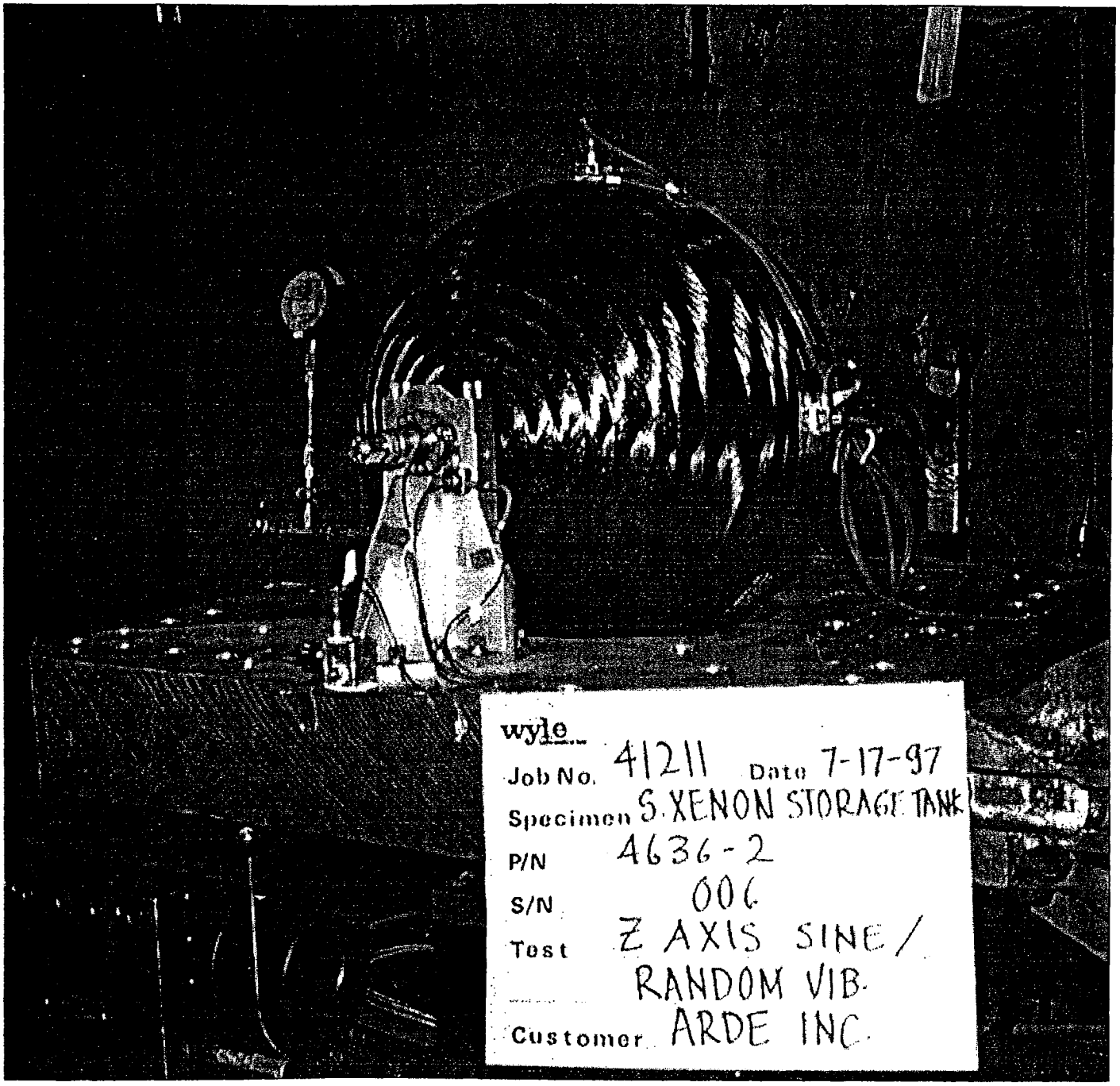

PHOTOGRAPH 4

"Z" AXIS VIBRATION TEST INSTALLATION

Figure 2-9

RANDOM VIBRATION PLOT 73

Random Limit Channel

ARDE 41211 0DB

Z LAT. QUAL MODEL 0 dB

Figure 2-10

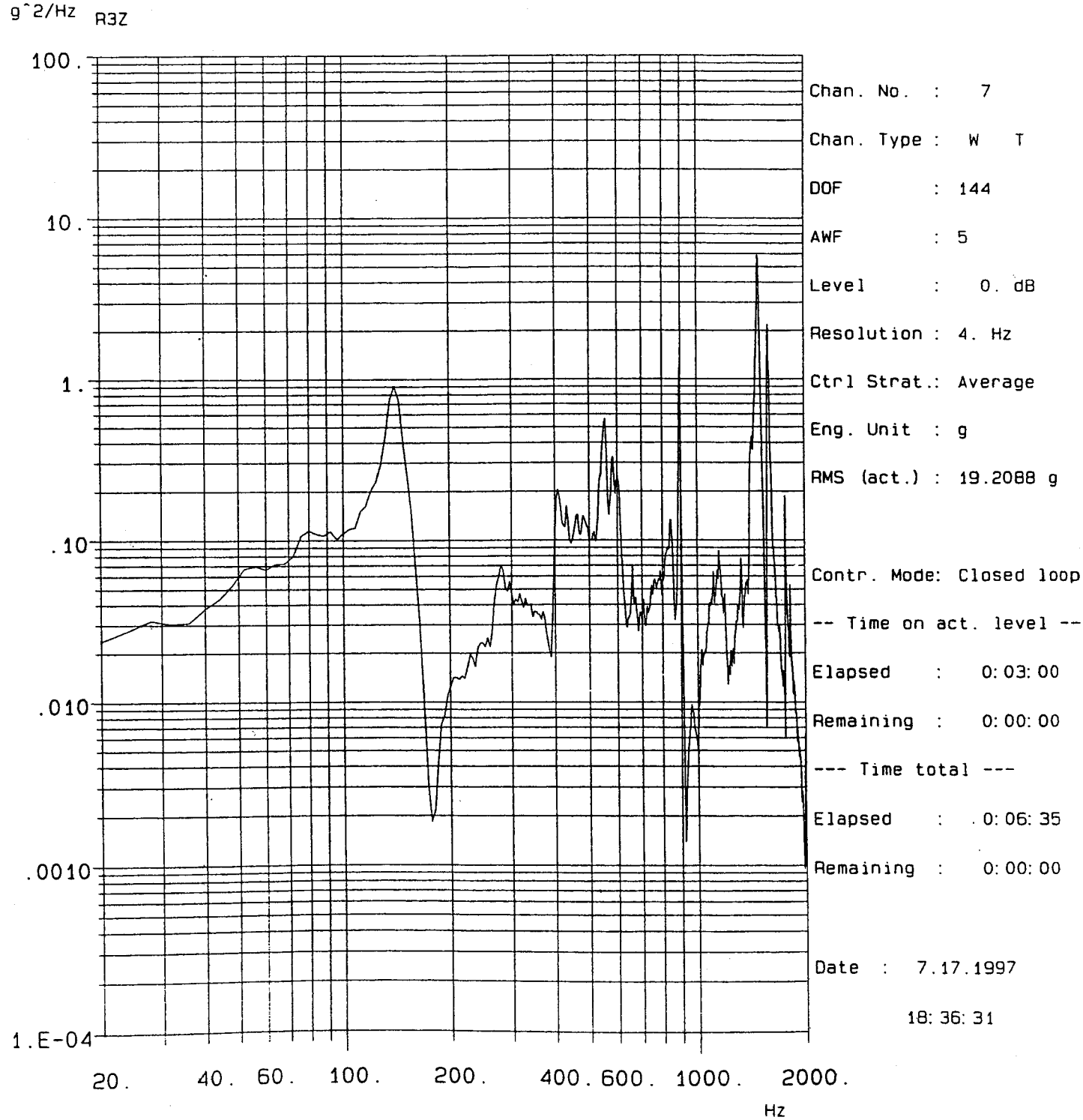

RANDOM VIBRATION PLOT 77

Random Limit Channel

ARDE 41211 0DB

Z LAT. QUAL MODEL 0 dB

Figure 2-11

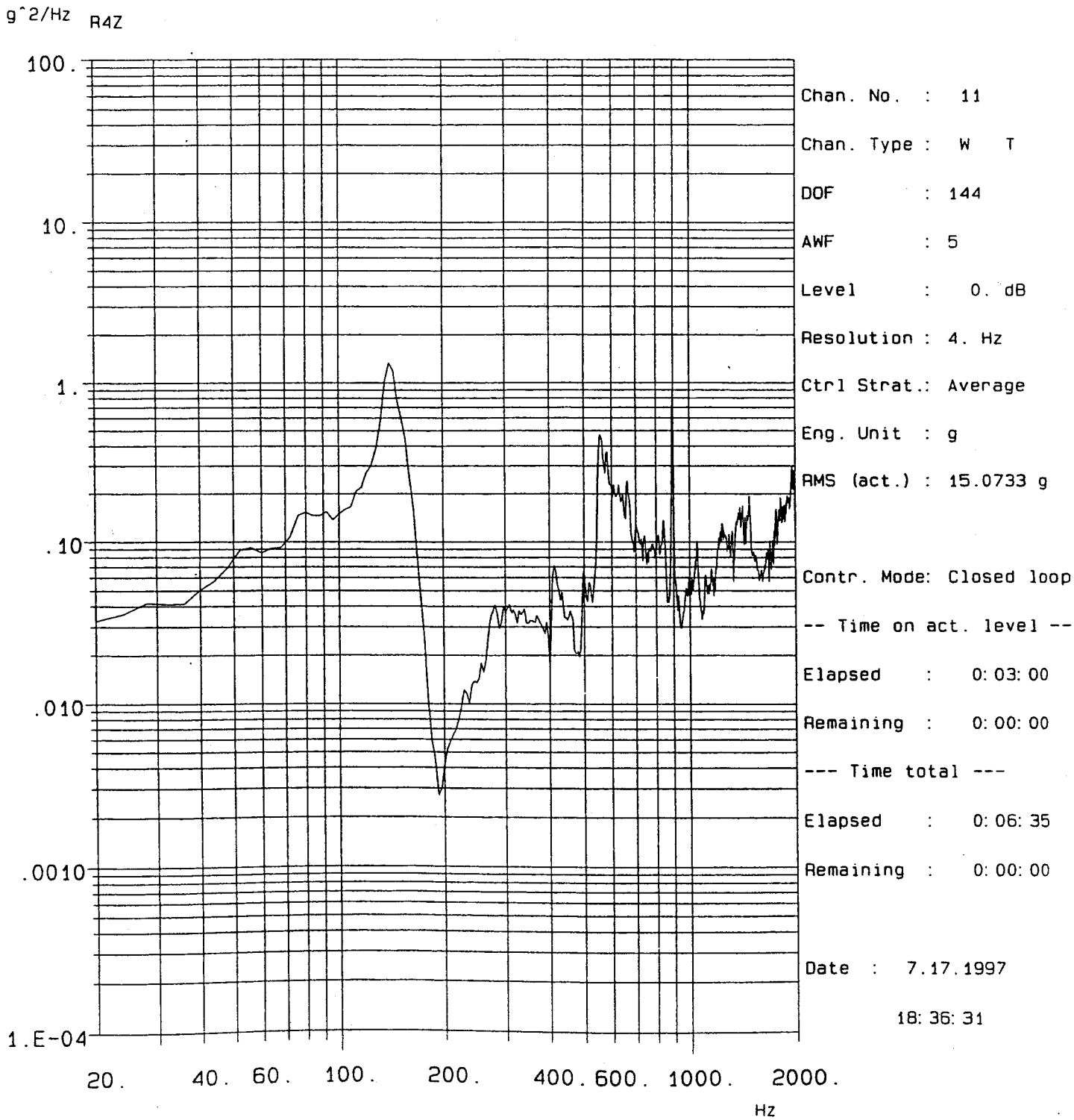

16

RANDOM VIBRATION PLOT 75

Figure 2-12

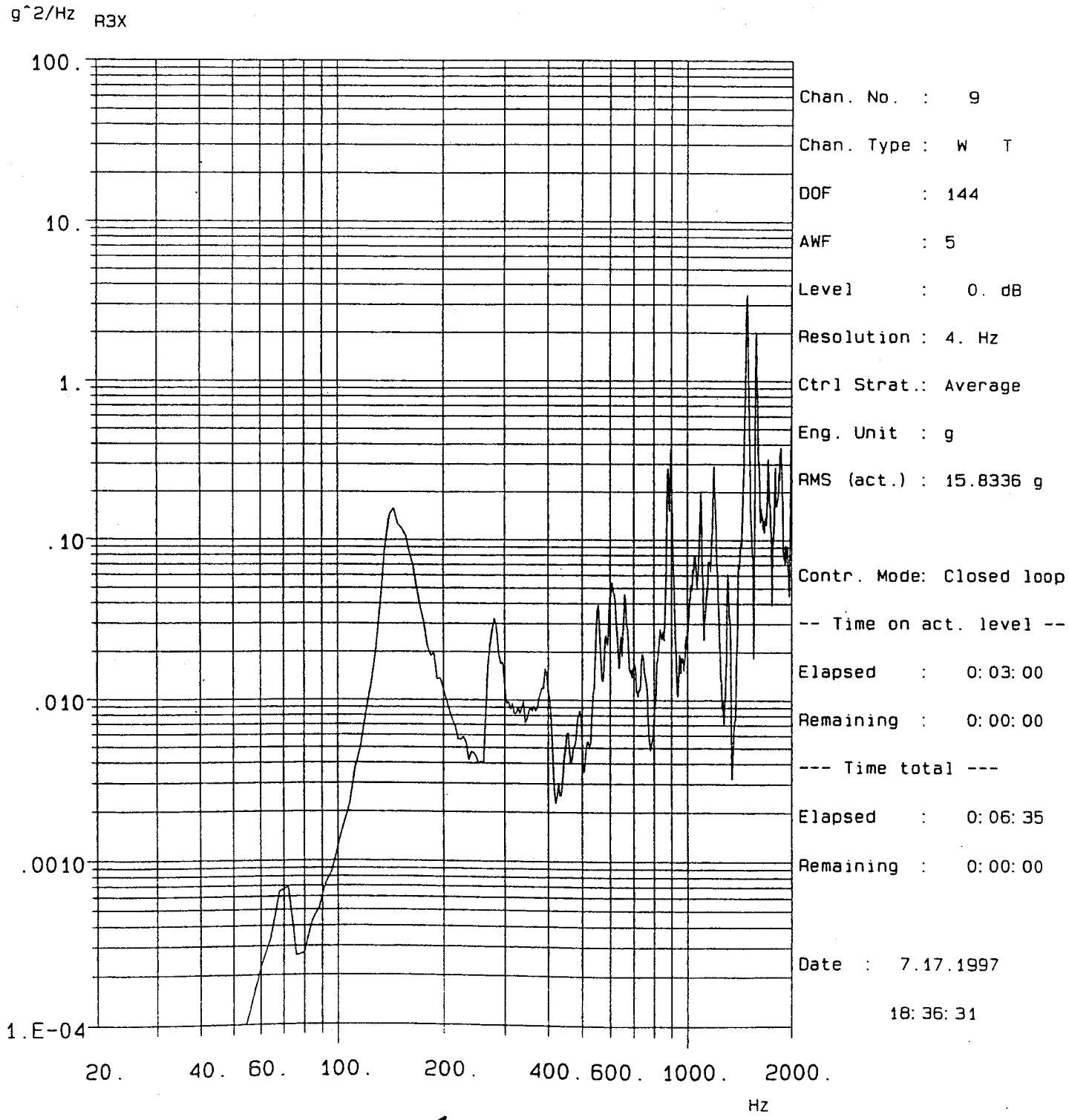

RANDOM VIBRATION PLOT 78

Figure 2-13

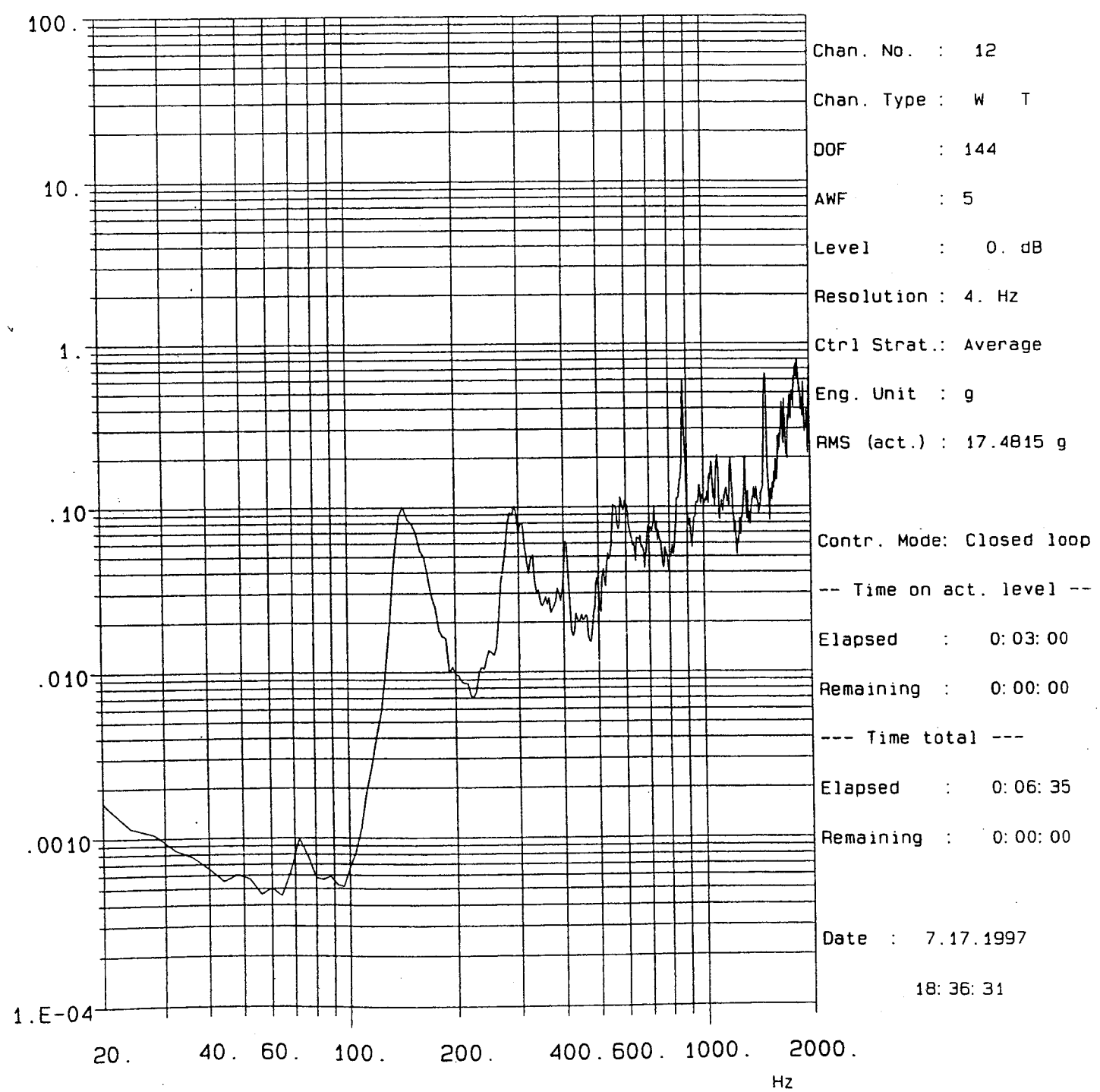

RANDOM VIBRATION PLOT 70

Figure 2-14

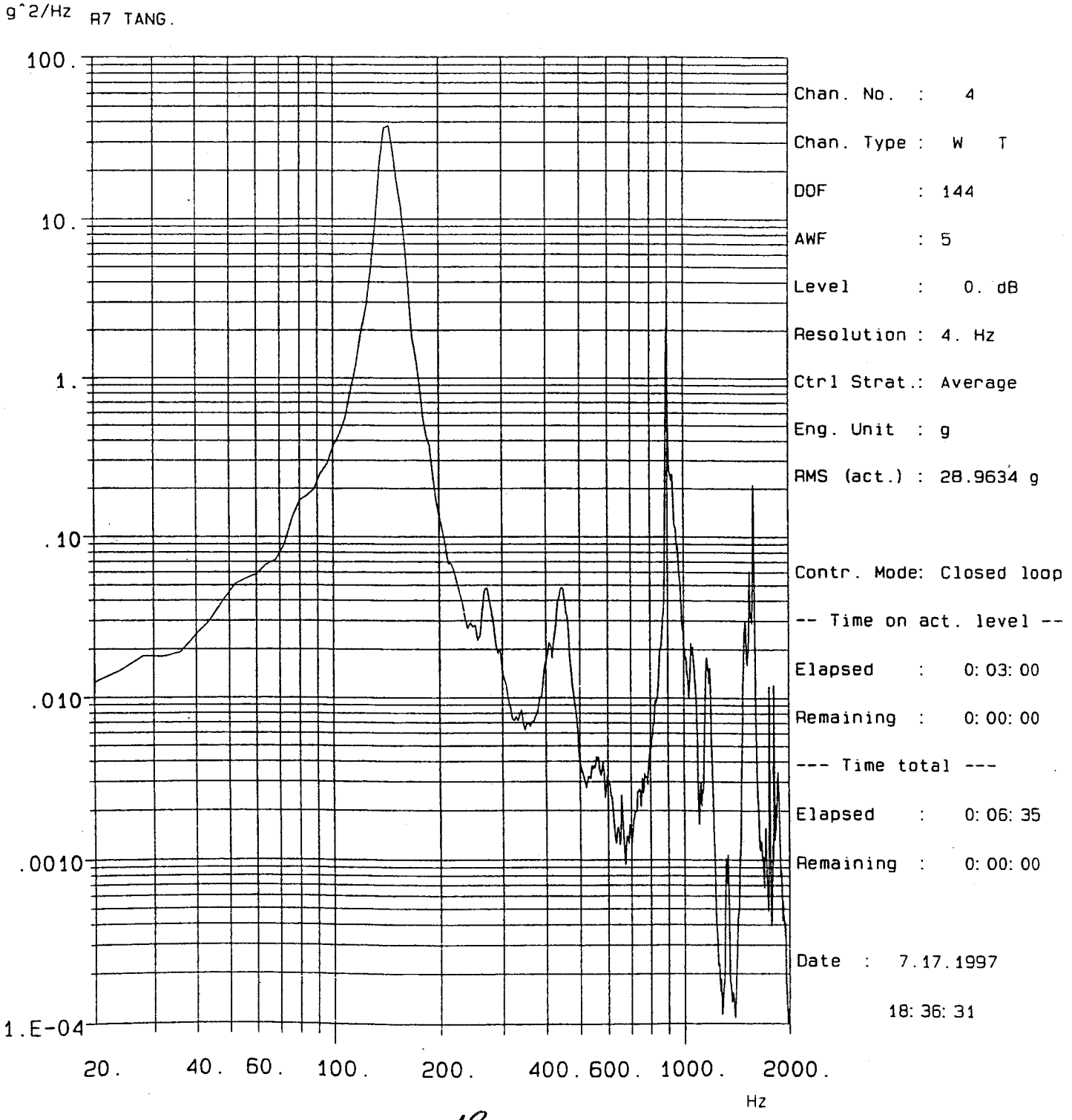

RANDOM VIBRATION PLOT 119

Random Limit Channel

ARDE 41211 ODB

X AXIAL QUAL MODEL

Figure 2-15

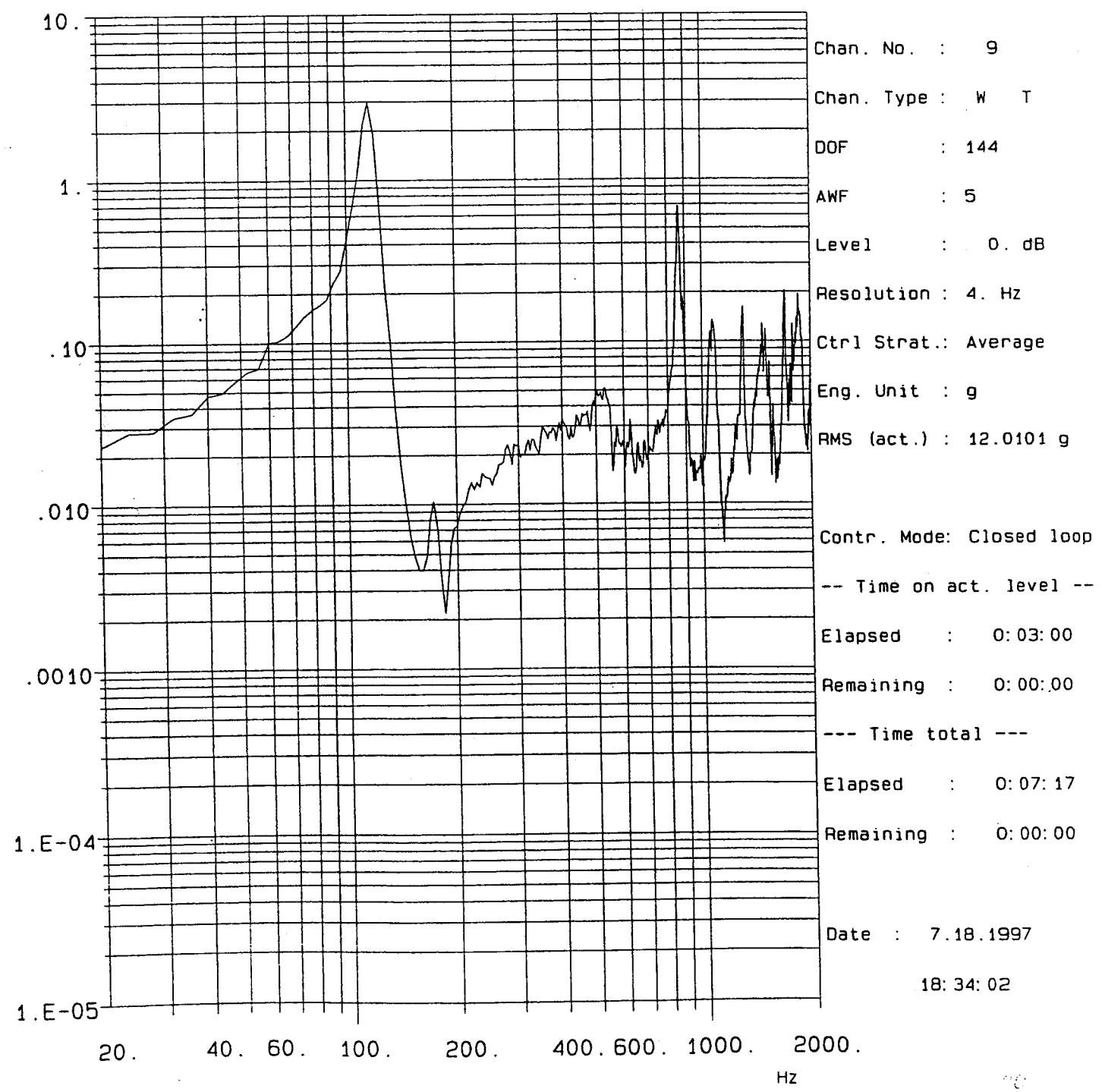

RANDOM VIBRATION PLOT 122

Random Limit Channel

ARDE 41211 0DB

X AXIAL QUAL MODEL

Figure 2-16

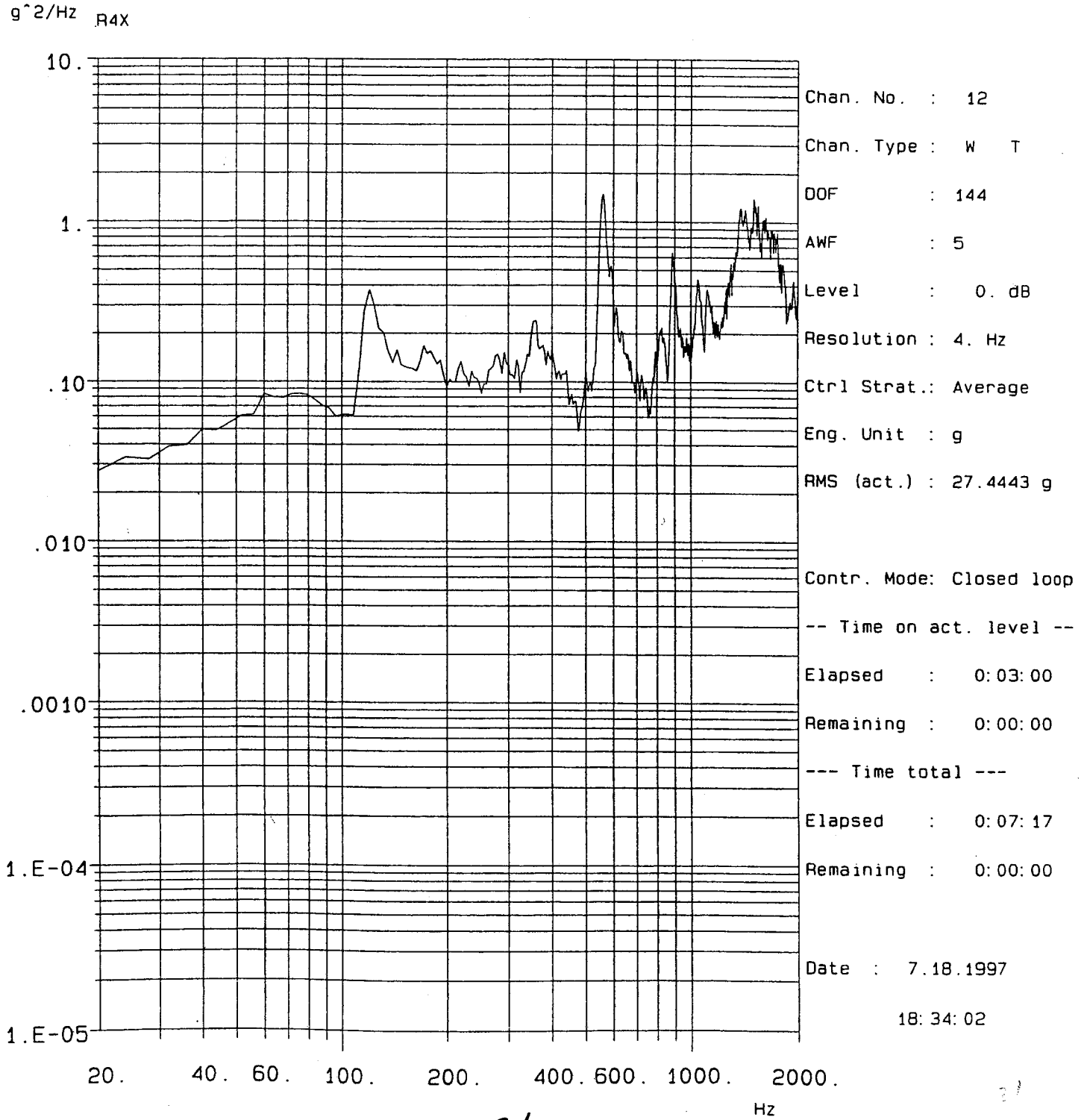

RANDOM VIBRATION PLOT 125

Random Limit Channel

ARDE 41211 ODB

X AXIAL QUAL MODEL

Figure 2-17

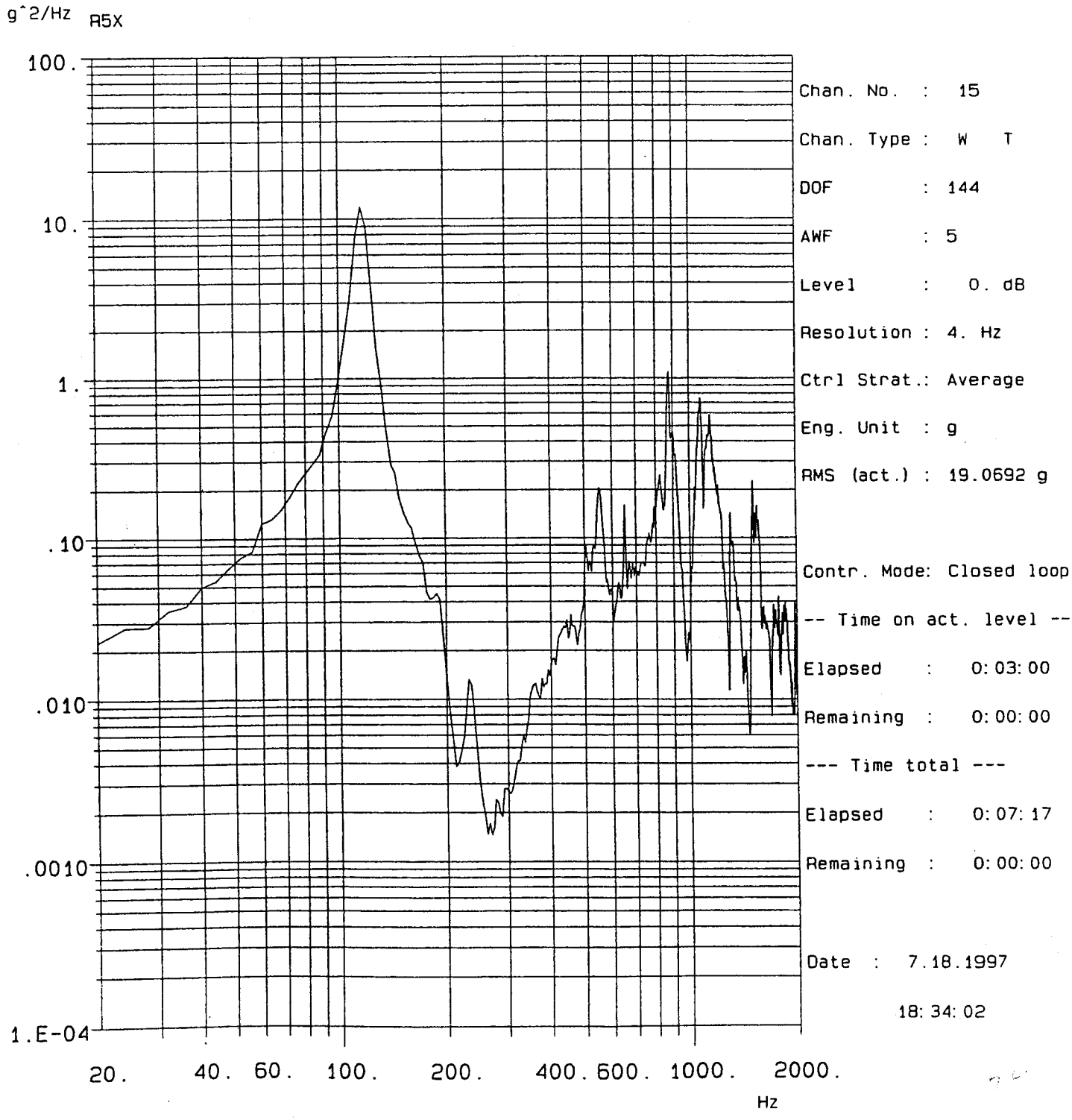

RANDOM VIBRATION PLOT 115

Random Limit Channel

ARDE 41211 0DB

X AXIAL QUAL MODEL

Figure 2-18

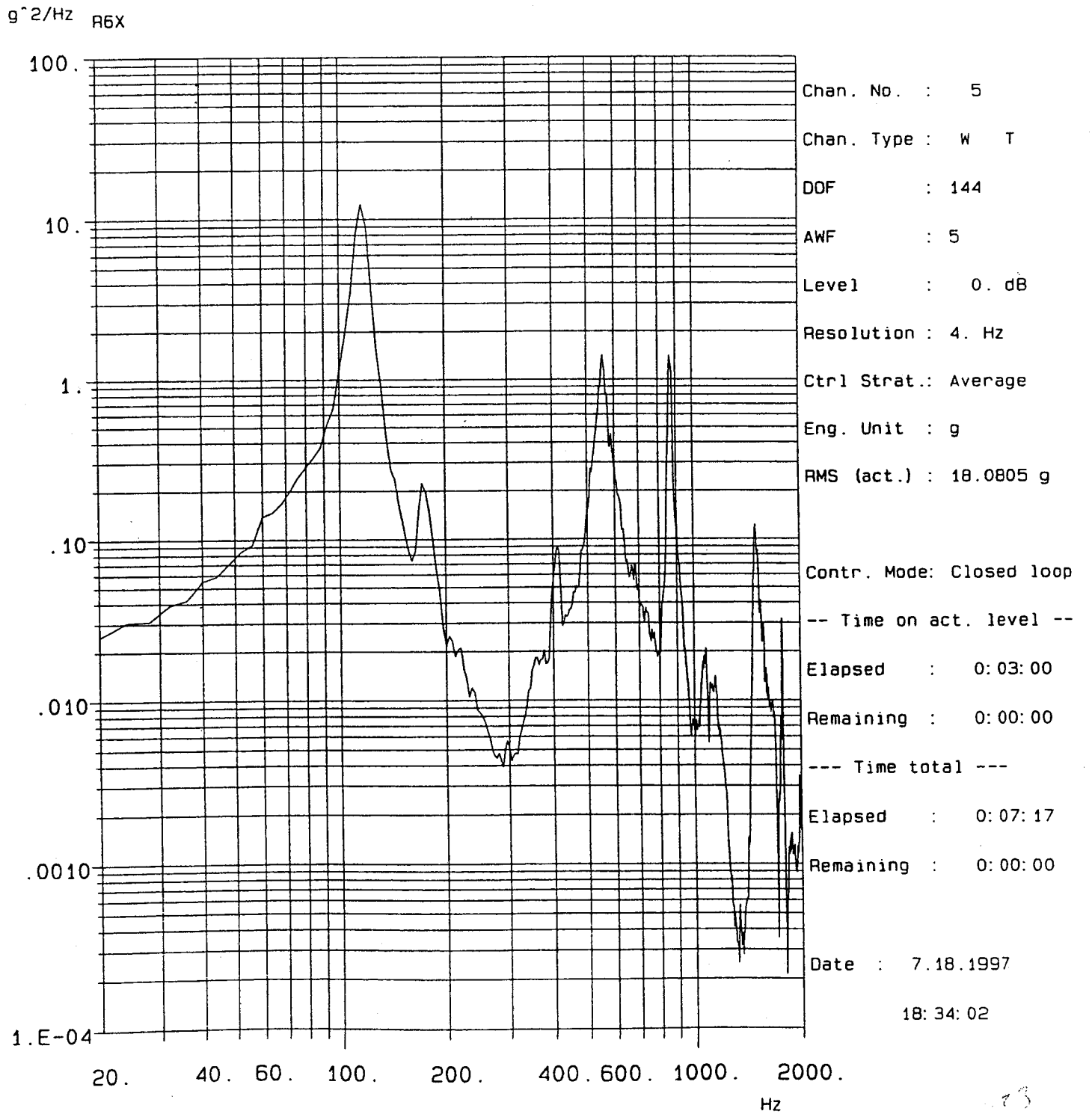

3.0 RESULTS

The result of evaluation indicates that PN D4815 environments are equal or less severe than the D4636 environments. Vessel PN D4636 was designed as a xenon storage and complied with Rockwell specification 7RC2849 for ISS, and MIL-STD-1522A as reported in ARDE's EG 10158. Vessel PN D4636 was tested and qualified as reported in ARDE's EG 10210. Design requirements of D4636 are equal to or greater than the D4815. By virtue of the similarity of the two designs, PN D4815 is therefore qualified to the structural and environmental conditions as specified in PM 10070.

The mounting bracket assemblies C4844 & C4845 are also structurally adequate to support the D4815 xenon storage vessel for AMS 02 as shown in section 4.2.3.

4.0 EVALUATION

4.1 Fabrication and Design

The fabrication and design of PN D4815 and PN D4636 are identical with the exception of final machined boss interface details. The liner and wrap pattern are identical between the two designs. PN D4815 shares the same liner design with PN D4636 differing only in boss interface details. PN D4815 and D4636 have the same wrap pattern using Toray T-1000 carbon with HARF 53 resin system. The 12500 psid rupture value of the D4636 vessel is a reliable indicator of the nominal rupture value for the D4815.

4.1.1 Materials and Processes

The vessel liners are made of cryoformed CRES 301 of the same material specifications for all referenced applications. The hydroforming, welding, hydrostretching, solution annealing, and cryogenic stretching are performed using the same tooling. All identified operations are performed by ARDE except hydroforming which is subcontracted. Radiography and fluorescent penetrant inspections are also performed by ARDE to the preform (pre cryo liner) and postform (post cryo liner) assemblies to verify liner quality.

The composite overwrap for D4815 and D4636 are made of carbon fiber, Toray 1000, and HARF 53 resin system with the same curing cycle. Filament winding is performed by the same vendor Composite Atlantic in Lunenberg, Canada. Cryogenic re-stretching (autofrettage), final machining, acceptance testing, and final cleaning are performed by ARDE. The D4636 vessel was designed as xenon storage for the International Space Station program.

4.1.2 Design

4.1.2.1 Liner Design

The liner design of PN D4815 and D4636 are identical except for the boss interface. The D4815 boss design eliminates a boss barrel EB weld, which was in the environmental load path and replaces it with a 4/1 orbital tube weld to provide the required 1/4" diameter port interfaces. The 2 tank designs used the same hydroformed head PN C105415. The same hydrostretch die and cryostretch die are used to make the postform liner for the 2 tank designs. Therefore, all liner membrane dimensions are equivalent which result in the same liner material physical properties.

4.1.2.2 Boss Design

The final boss configurations at the final level of the two designs are shown in the blown-up figure 4-1 for D4815 and figure 4-2 for D4636. Note that the boss to boss shoulder lengths and load lines are the same for the two designs or improved on D4815. The D4815 has 1/4" tube ports while D4636 has a 0.50ϕ ID special port. By analysis, the D4815 boss bearing area has large margin from yielding due to proof pressure & large margin from rupture to burst pressure (see section 4.2.1). The alternating stresses due to environmental loads are the same at the boss flange sections for D4815 & D4636 since the two are identical in this area. The D4815 tube port is designed with a factor 4xMDP to satisfy tube interface and factor of safety requirement for lines and fittings (see section 4.2.2).

4.1.2.3 Fiberwrap Design

PN D4815 and D4636 have identical wrap pattern using Toray 1000 fiber with HARF 53 resin system. Fiber over-wrapping is performed by the same vendor, Composite Atlantic, in Lunenburg, Nova Scotia, Canada.

Figure 4-1 D4815 MOUNTING BOSSES

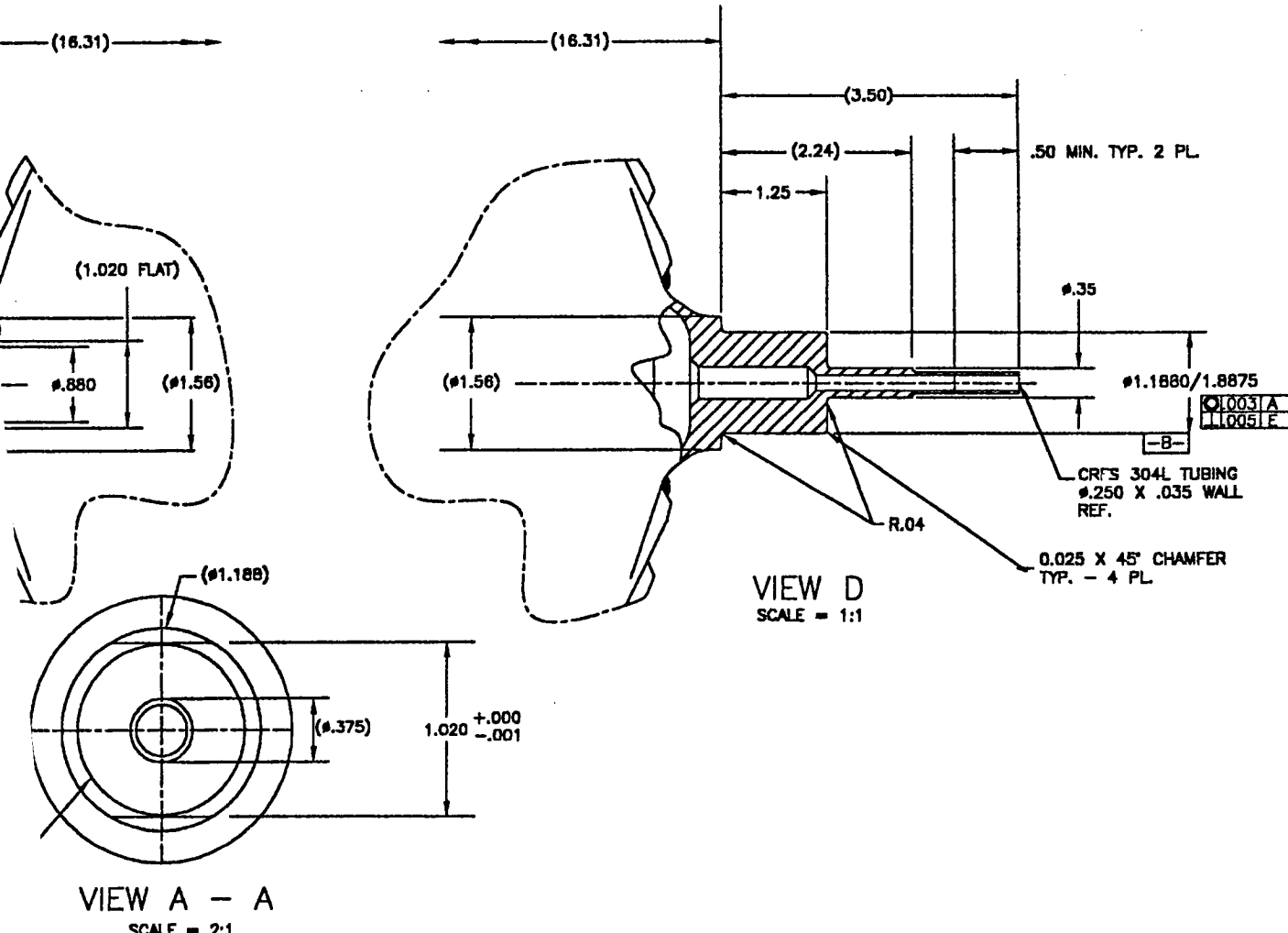

Figure 4-2 D4636 MOUNTING BOSSES

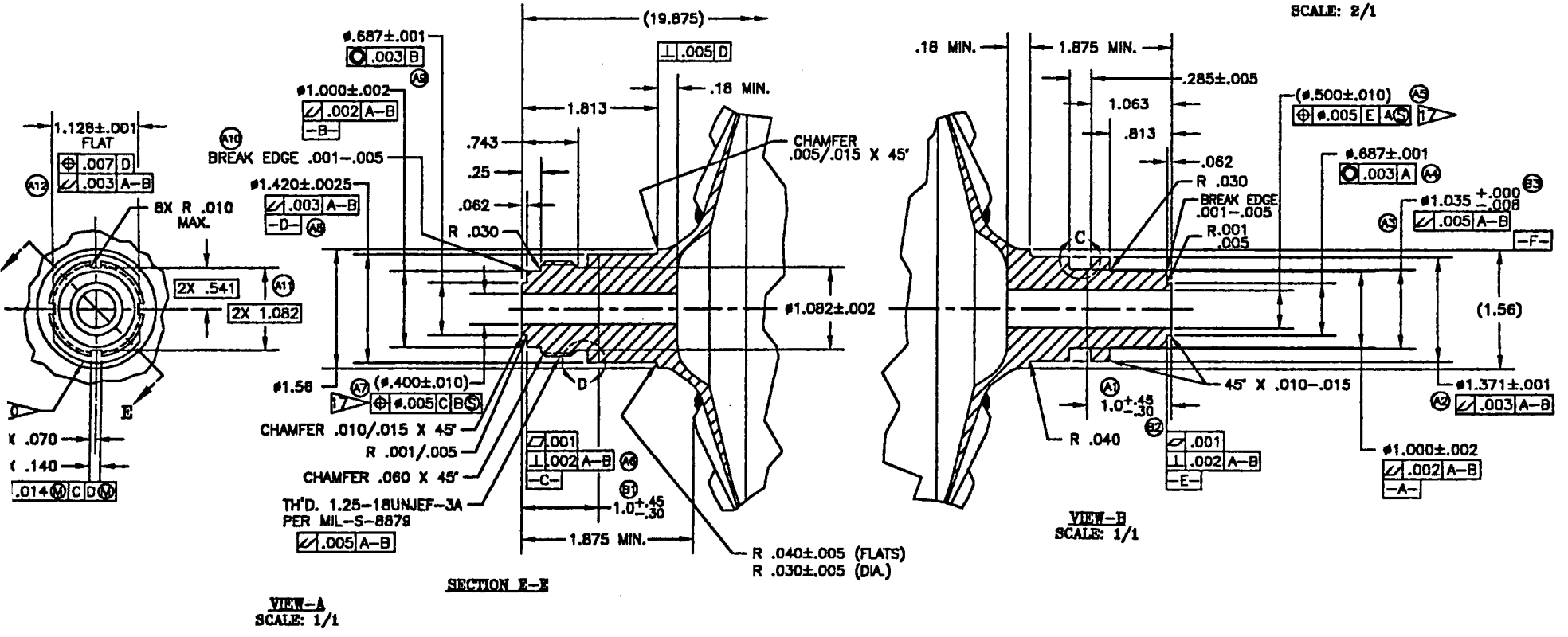

8 | 7 | 6 | 5 | 4

4.2 Additional Analyses

The fracture and stress analyses of D4636 is reported in EG 10158. Additional analyses to fully comply with TRD Xenon Gas Supply requirements of AMS 02 are shown below with positive margins in all cases.

4.2.1 Boss Analysis

D4815 Bearing Cross section (figure 4-1) = $\pi/4$ (1.1875^2 - .38^2) = .994 sq. in.

Pressure Stress, $\sigma = p\,(b^2+a^2)/(b^2-a^2)$ where b = .59375, a = .19

@ MDP, p = 3000 psi;

σ = 3000 (.59375^2+.19^2)/(.59375^2-.19^2) = 3684 psi

@ Proof, p = 1.5xMDP = 4500 psi

σ = 4500 (.59375^2+.19^2)/(.59375^2-.19^2) = 5527 psi

@ Burst, p = 6000 psi

σ = 6000 (.59375^2+.19^2)/(.59375^2-.19^2) = 7368 psi

For CRES 301, Annealed:

Allowable Yield Strength, Fty = 28 ksi

Allowable Ultimate Strength, Ftu =70 ksi

Therefore, margins of safety are:

M.S.y (at proof) = 28/3.7 - 1 = 6.57 M.S.u (at burst) = 70/7.4 - 1 = 8.4

Above margins are large, therefore boss interface is structurally adequate.

Note at the boss flange section, D4636 & D4815 are identical hence the pressure stresses plus combined with the alternating stresses due to the environmental loads are also identical.

4.2.2 Tube Analysis

Stress, $\sigma = p (b^2+a^2)/(b^2-a^2)$ where b = .125, a = .085

@ MDP, p = 3000 psi;

$\sigma = 3000 (.125^2+.085^2)/(.125^2-.085^2) = 8161$ psi

@ Proof, p = 1.5xMDP = 4500 psi

$\sigma = 4500 (.125^2+.085^2)/(.125^2-.085^2) = 12241$ psi

@ Burst, p = 4.0xMDP =12000 psi

$\sigma = 12000 (.125^2+.085^2)/(.125^2-.085^2) = 32644$ psi

For CRES 304L, Annealed Tubing:

Allowable Yield Strength, Fty = 28 ksi

Allowable Ultimate Strength, Ftu =70 ksi

Therefore, margins of safety are:

M.S.y (at proof) = 28/12.2 - 1 = 1.29 M.S.u (at burst) = [illegible] = 1.14

4.2.3 Fatigue Analysis

Requirements : 1 Proof + 100 MDP x factor of 4 = [illegible] MDP

From EG 10158, section 4.4.2:

@ Proof, $\sigma a/\sigma u$ = .45 , life Ni = 40000 cy

@ MDP, $\sigma a/\sigma u$ = .26 , life Ni = infinities

Cumulative Damage, U = $\Sigma ni/Ni$ = [illegible]000 + 400/infinity = .0001

M.S. = .8/.0001 - 1 = very large

4.2.4 Mounting Bracket Analysis

Finite element analysis performed on the bracket using ABAQUS computer code showed that the bracket is structurally adequate to support the D4815 tank in the AMS 02 launch environment. Both brackets are identical in shape but only one (fixed end) supports the full axial load and the two share the lateral load. Hence, only the fixed end bracket was evaluated for the TRD xenon gas supply system.

The bracket was analyzed with an equivalent 10g unit load of 128 lb/g (109 lb xenon + 17 lb tank + 2 lb miscellaneous) in axial, lateral, and vertical directions. The unit load applied in lateral and vertical directions are half of the total load since each bracket supports half of the load. Von mises stress contour plots from each case at 10 g unit load are shown in figures 4-3, 4-4, & 4-5. At a 3 sigma peak of the random vibration spectrum, the stress responses on the bracket are:

Axial Load Stress, σ = 8.9 ksi/10 g x 8.9 grms x 3 = 24 ksi

Lateral Load Stress, σ = 11.4 ksi/10 g x 8.9 grms x 3 = 30.4 ksi

Vertical Load Stress, σ = 4.6 ksi/10 g x 8.9 grms x 3 = 12.3 ksi

With the Al 7075-T73 bracket material properties at 150°F from MIL-HDBK-5, ref.8, at:

Fty = 54 x .96 = 52 ksi

Ftu = 65 x .92 = 60 ksi

Margins of safety at 1.1 factor for yield and 1.5 for ultimate:

Axial M.S.y = 52 / (24 x 1.1) - 1 = 0.97

M.S.u = 60 / (24 x 1.5) - 1 = 0.67

Lateral M.S.y = 52 / (30.4 x 1.1) - 1 = 0.57

M.S.u = 60 / (30.4 x 1.5) - 1 = 0.31

Vertical M.S.y = 52 / (12.3 x 1.1) - 1 = 2.29

M.S.u = 60 / (12.3 x 1.5) - 1 = 2.25

South West Bearing BAN 19446 static load capacity:

Axial = 7500 lb

Lateral = 78000 lb

Margins of safety :

Axial M.S. = 7500/(128 x 8.9 grms x 3 x 1.5) - 1 = .46

Lateral M.S. = 78000/(128 x 8.9 grms x 3 x 1.5/2) - 1 = 29.0

Therefore the bracket mounting assembly is adequate to support the D4815 tank loaded with 109 lb of Xenon at the TRD environmental condition.

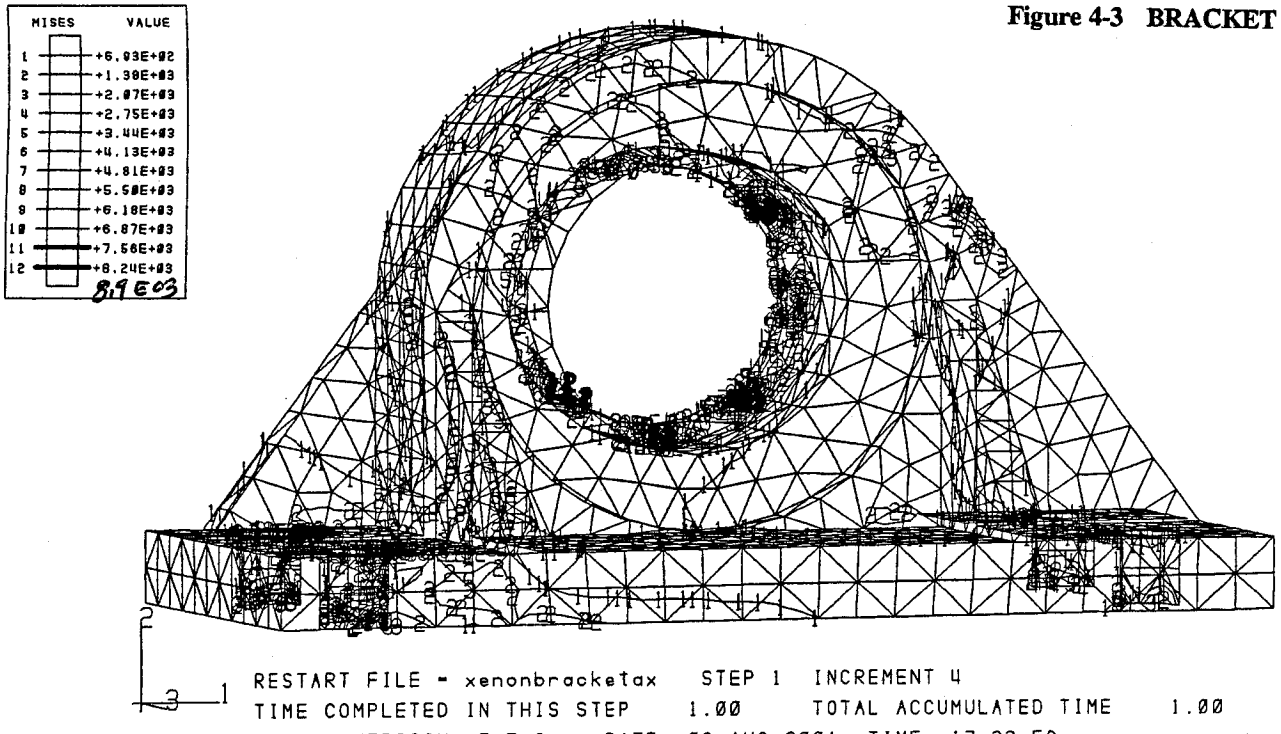

Figure 4-3 BRACKET AT 10G AXIAL (1280 LBS)

ABAQUS

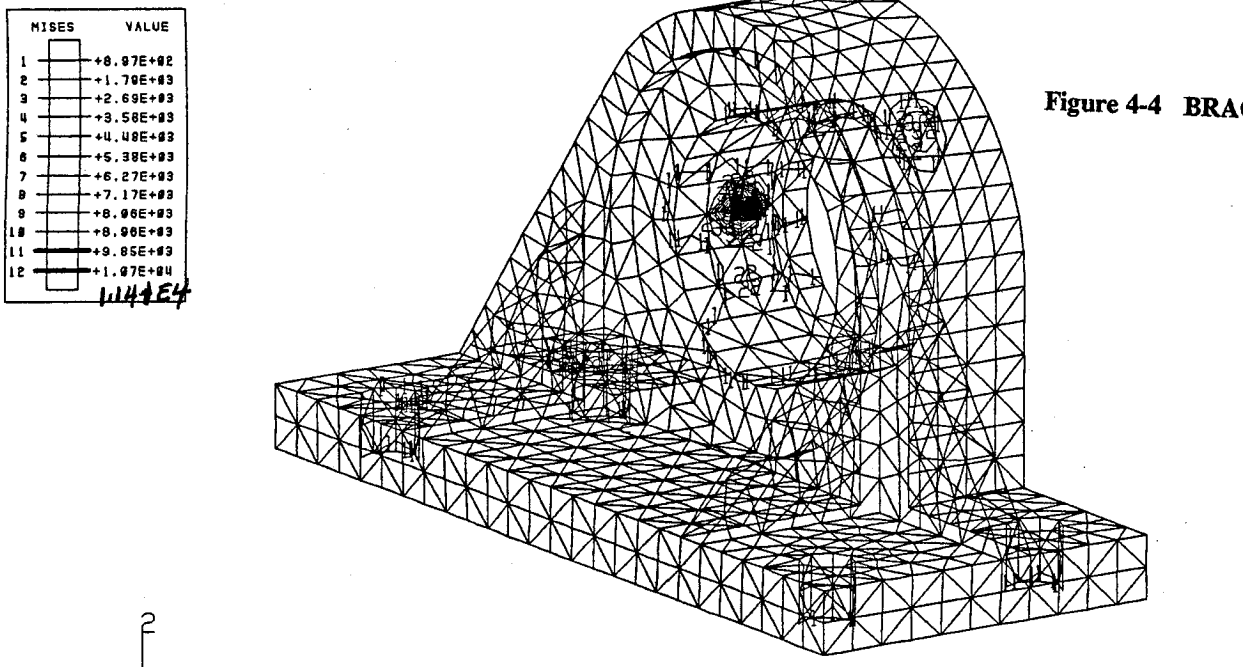

Figure 4-4 BRACKET AT 10G LATERAL (1280/2 = 640 LBS)

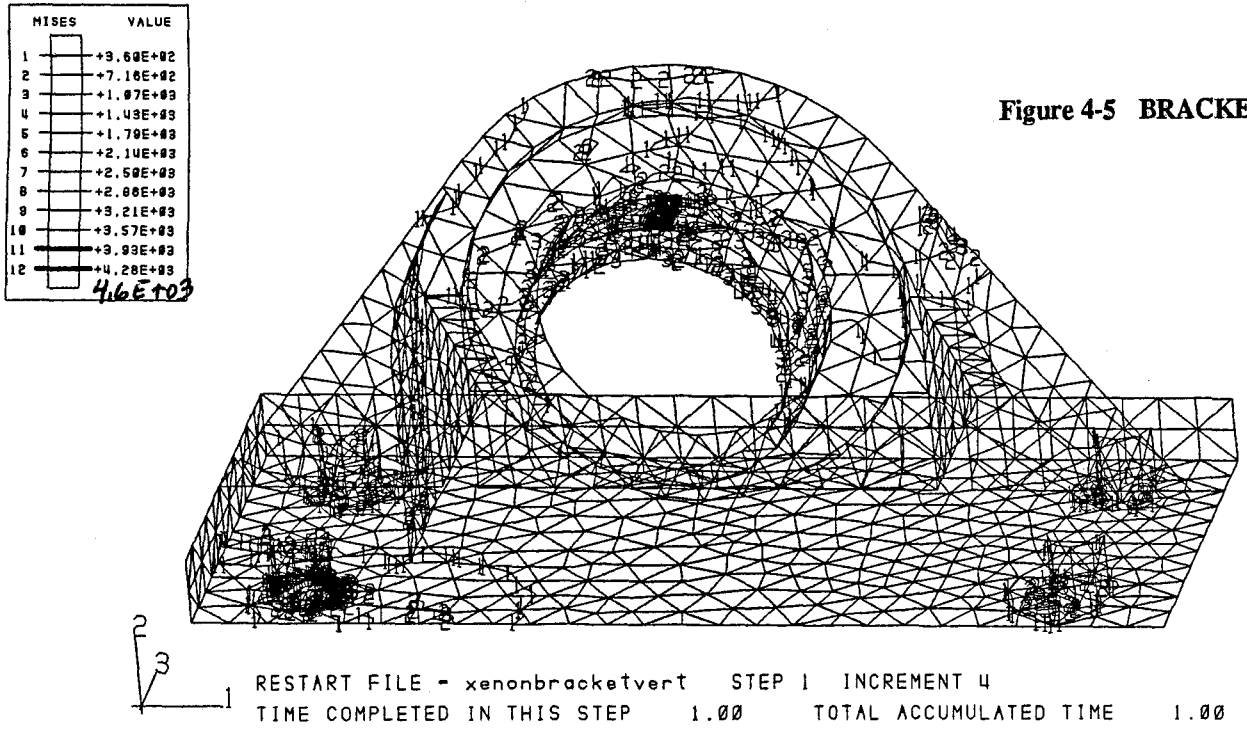

Figure 4-5 BRACKET AT 10G VERTICAL (1280/2 = 640 LBS)

5.0 References

1) ARDE's PN D4636, Rev. C, Sphere, Xenon Storage Filament Wound

2) ARDE's PM 10070, Statement of Work for TRD Gas Supply System

3) MIL-STD-1522A (USAF), Standard General Requirement for Safe Design and Operation of Pressurized Missile and Space Systems, Department of Defense, May 1984

4) Rockwell International Specification 7RC2849, Rev. A, Xenon Tank, 2 May 1996.

5) ARDE's Fracture and Stress Analyses Report EG 10158, Rev. A, for Sphere, Xenon Storage Filament Wound, PN D4636.

6) ARDE's Qualification Test Report EG 10210, N/C, for Xenon Storage Tank , PN D4636.

7) MIL-HDBK-5F, Metallic Materials and Elements for Aerospace Vehicle Structures.