Alpha Magnetic Spectrometer (AMS-02) Cryocooler

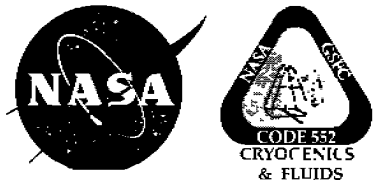

SWALES AEROSPACE

Preliminary Design Review

September 10, 2002

Contents

SWALES AEROSPACE

- AMS Science/Technical Objective
- Bracket Interfaces and Requirements
- Program Overview
- Mechanical Design
- Structural Analysis
- Thermal Analysis
- Bracket Design Verification, Test Flow, Test Plans
- Other

Program Objective

- Design and analyze a flight qualified cryocooler bracket for the Alpha Magnetic Spectrometer-02 project. The analysis should include structural analysis, flight loads analysis and thermal analysis.
  - Cryocooler structural support with mechanical isolation to allow balancer to reduce cooler vibration
    - » Accommodate launch loads with appropriate factors of safety
    - » Provide fundamental frequency between 35 and 50 Hz
  - Provide thermal isolation between cooler heat rejection and vacuum case
  - Assist and accommodate cooler heat rejection by loop heat pipe provided
  - Maintain vacuum case seal using provided dual o-ring design
- Deliverables
  - Bracket design drawings
  - Analysis reports

Design Description

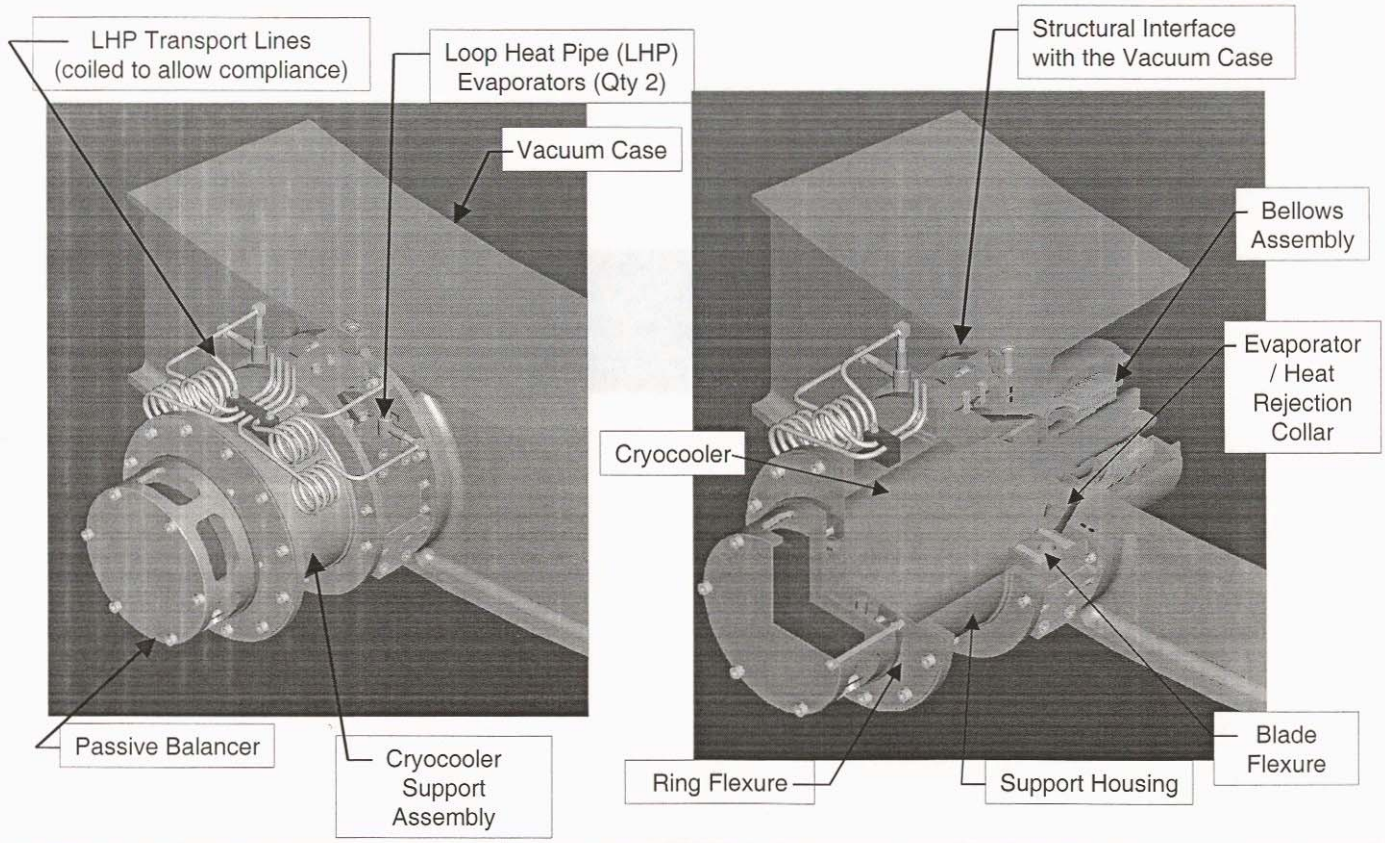

Interface Requirements

- GSFC Alpha Magnetic Spectrometer-02(AMS-02) Cryocooler Mechanical Interface Requirements (AMS-552-SPEC-003)
- Swales cryocooler ICD
- Sunpower revised cryocooler ICD
- Caged balancer ICD (defined in AMS-552-SPEC-003)
- Evaporator block ICD (defined in AMS-552-SPEC-003)

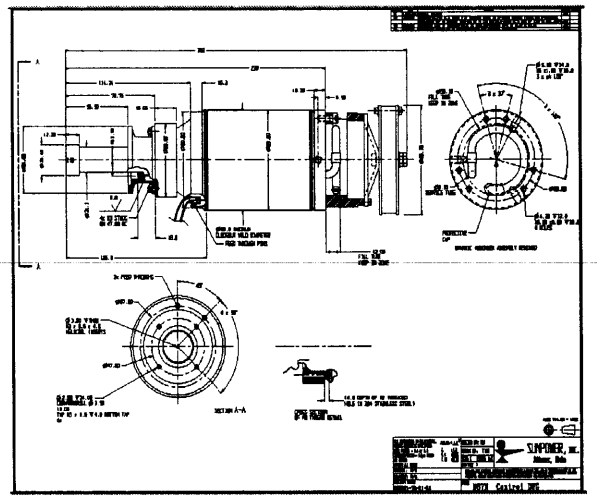

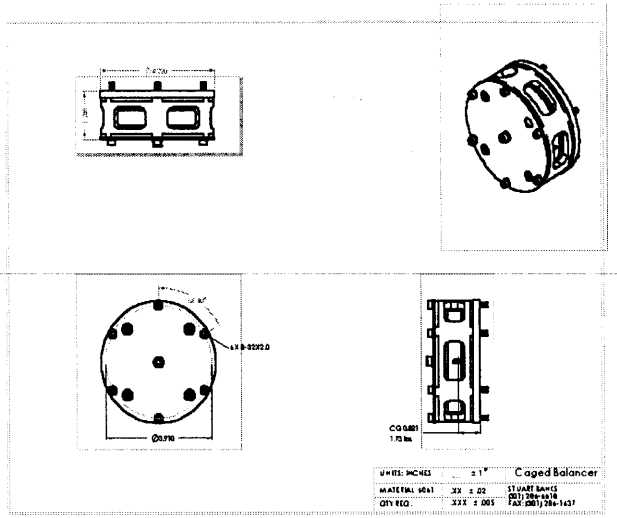

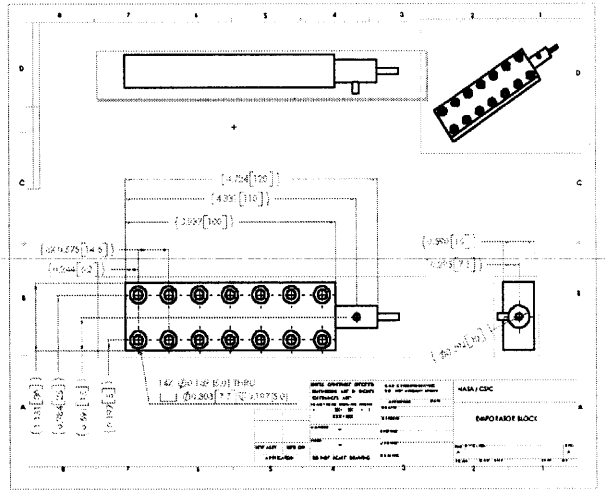

Design Introduction

- Geometry overview
- Mechanical interfaces & requirements
  - AMS-02 interface & keep-in zone
  - Vendor ICD
- Design layout
  - Compliance with interface requirements
  - Assembly overview
  - Assembly procedure
  - Electrical/thermal accommodations
- Mass properties/materials list
- Drawing status
- Risk assessment of machining & assembly

AMS-02 Cryocooler Assembly In Vacuum Case

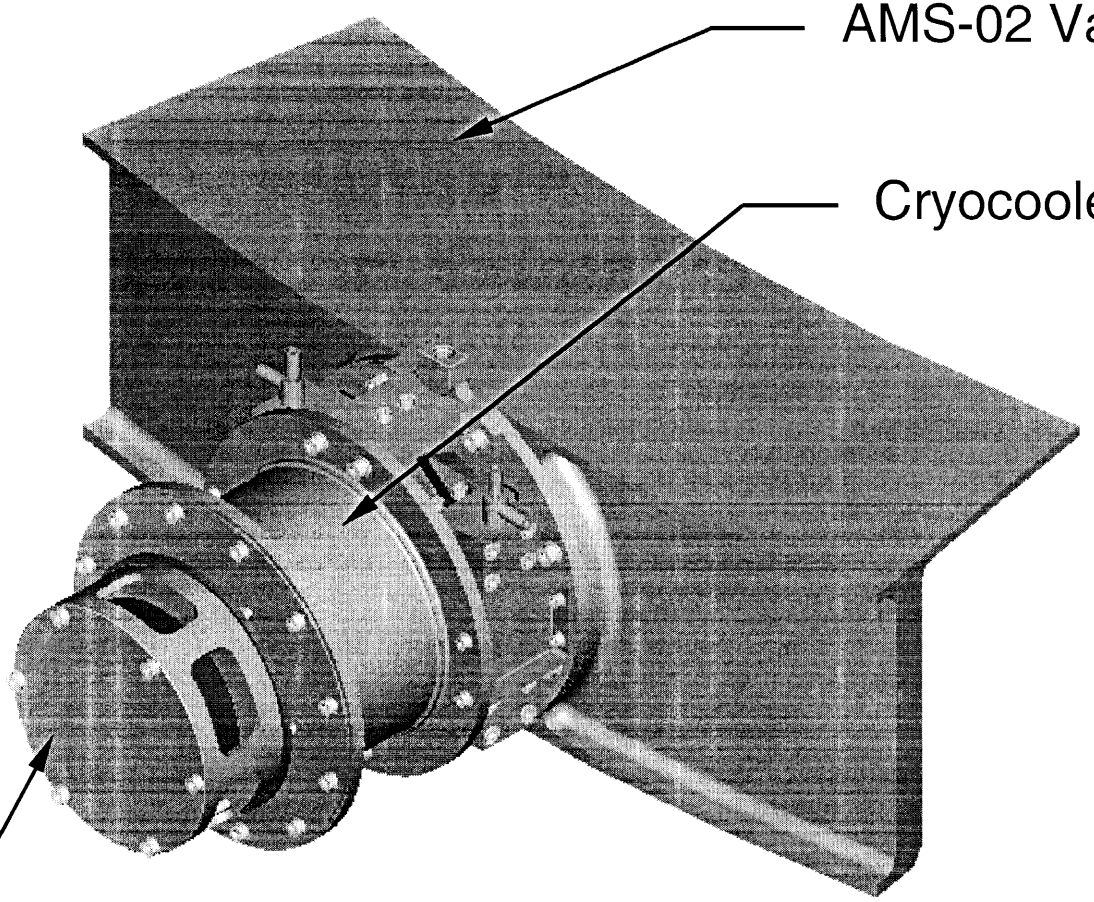

Interface Requirements (1)

- Accommodate mating interfaces
  - Vacuum Case
    - » Eight #10-32 threaded inserts on 5.5" bolt circle for attachment of Cryocooler Assembly
    - » 4" opening pass-through for Cryocooler Assembly
    - » Double o-ring design required with test port
  - Passive Balance Mass
    - » Six #8-32 bolts on 3.910" bolt circle
  - Evaporator Block
    - » 14 M4 bolts for both blocks
  - Cryocooler
    - » Mating hardware shall conform to geometric features
    - » Six M5 helicoils on 2.704" bolt circle
    - » Three M6 helicoils
    - » Four M3 studs on 1.850" bolt circle
    - » Double o-ring design required at Cryocooler shaft (no test port required)
    - » Fill tube stay-out zone
- Cryocooler assembly must fit within keep-in zone

Interface Requirements (2)

- Incorporate 400 series CRES in Boot for magnetic shielding of Cryocooler (Lockheed spec calls out for Aluminum - CRES ok per waiver)
- Provide access and support for Loop Heat Pipe routing
  - Allow for compliance during pump-down, launch and on-orbit performance
- Surface roughness of 63 micro inches or better for all structural interfaces
- Mounting surfaces shall not be painted (Boot Flange at Vacuum Case shall be primed with Super Koropon to prevent corrosion)
- All vacuum surfaces shall be cleaned, polished and protected with vacuum grease (thin layer)
- Brackets
  - Power lead connector support
  - Temperature sensor lead connector support
  - LHP transport line support (to be defined)
  - Provide mounting locations for additional brackets

Cryocooler Interface

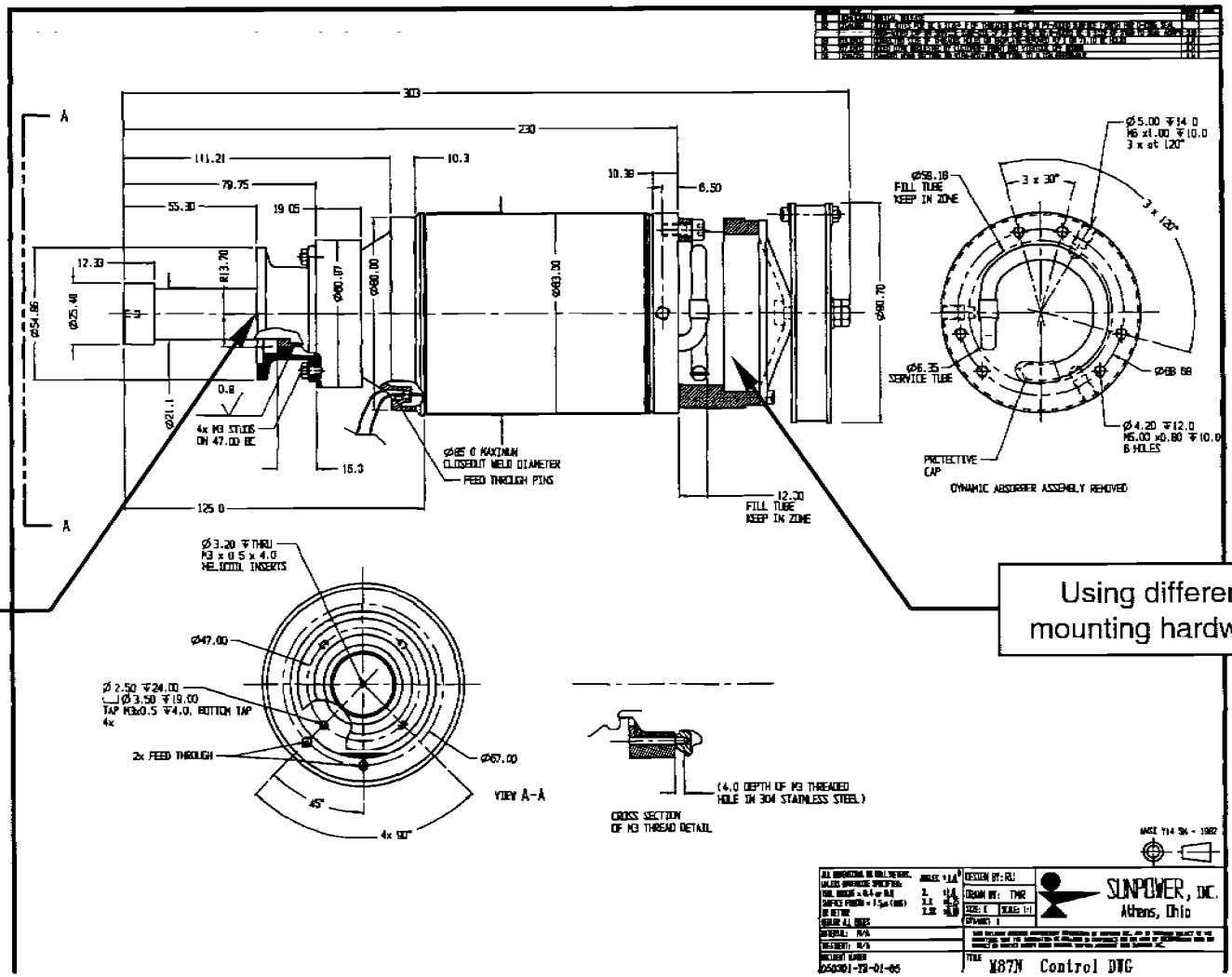

Using different flange design

Using different mounting hardware

Cryocooler Assembly Keep-in Zone

Keep-in zone (defined by plane) requires that Balance Mass be removed for transport

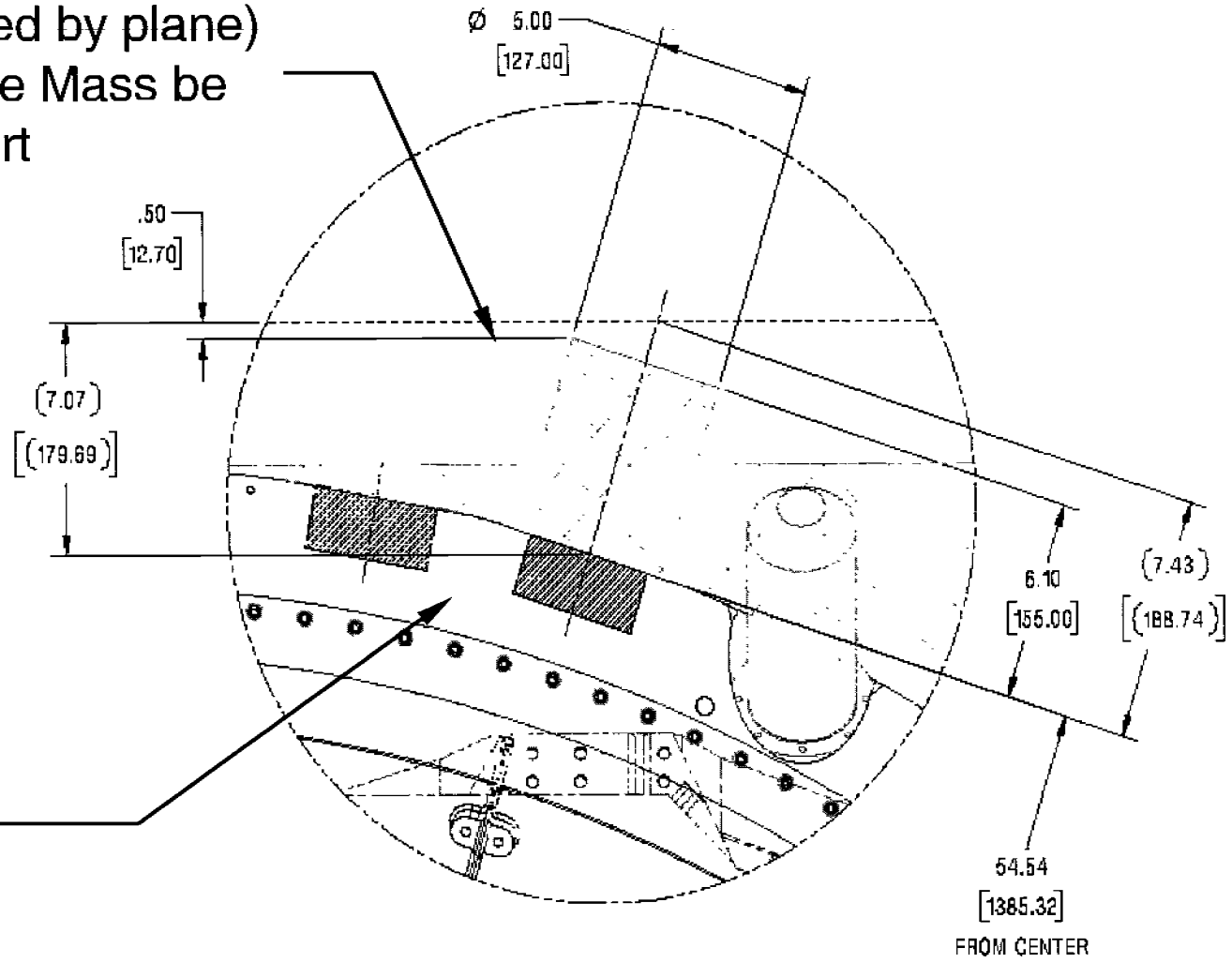

Vacuum Case

Compliance with Keep-in Zone

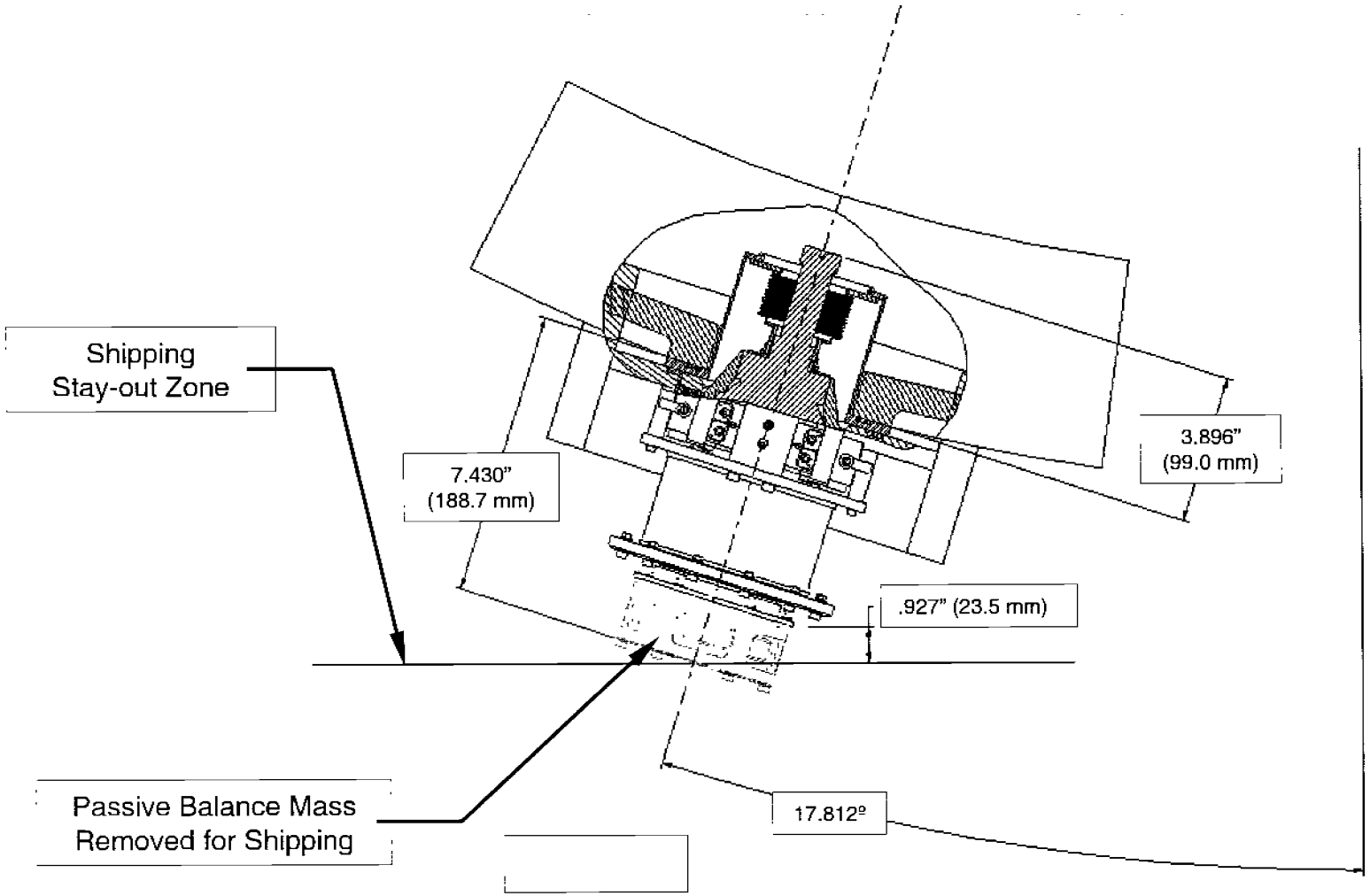

Design Layout (1)

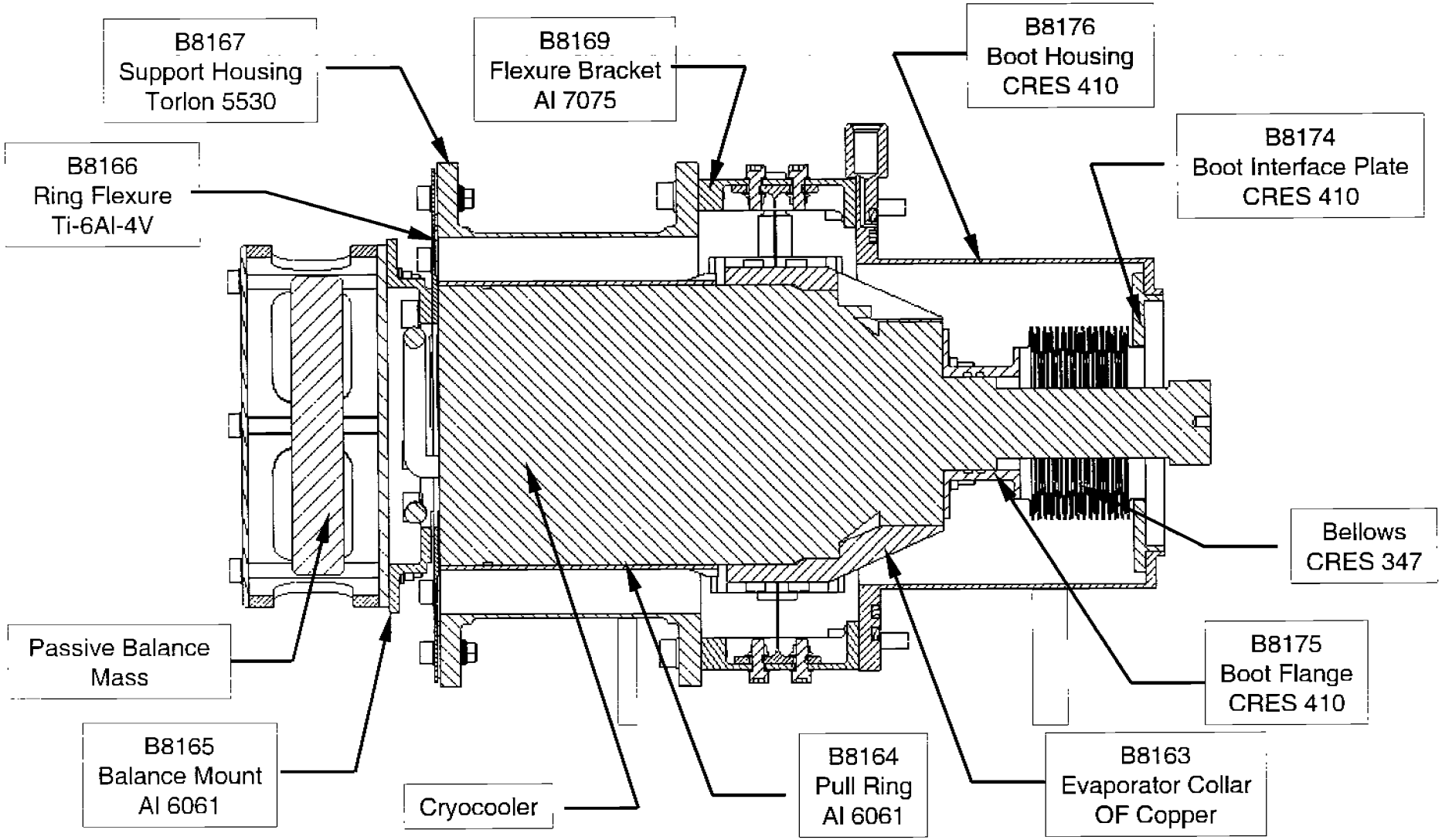

Design Layout (2)

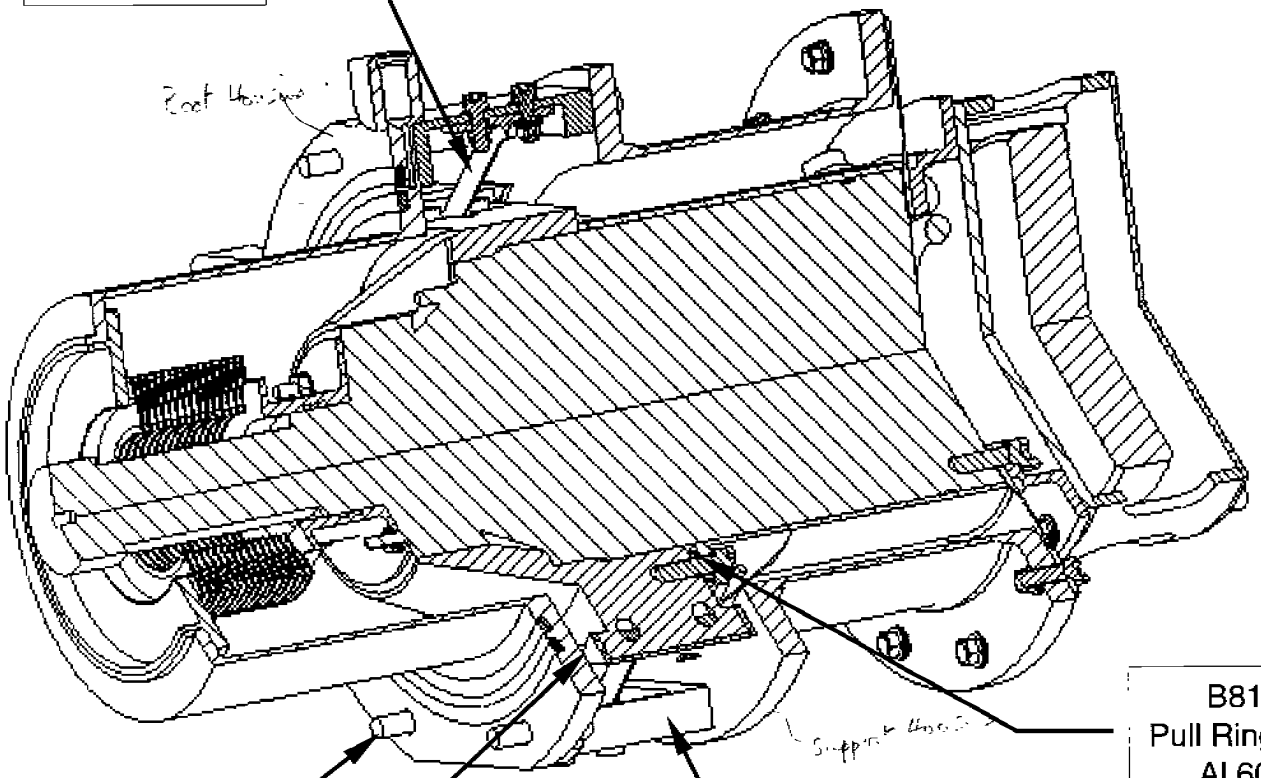

Assembly – Step 1a

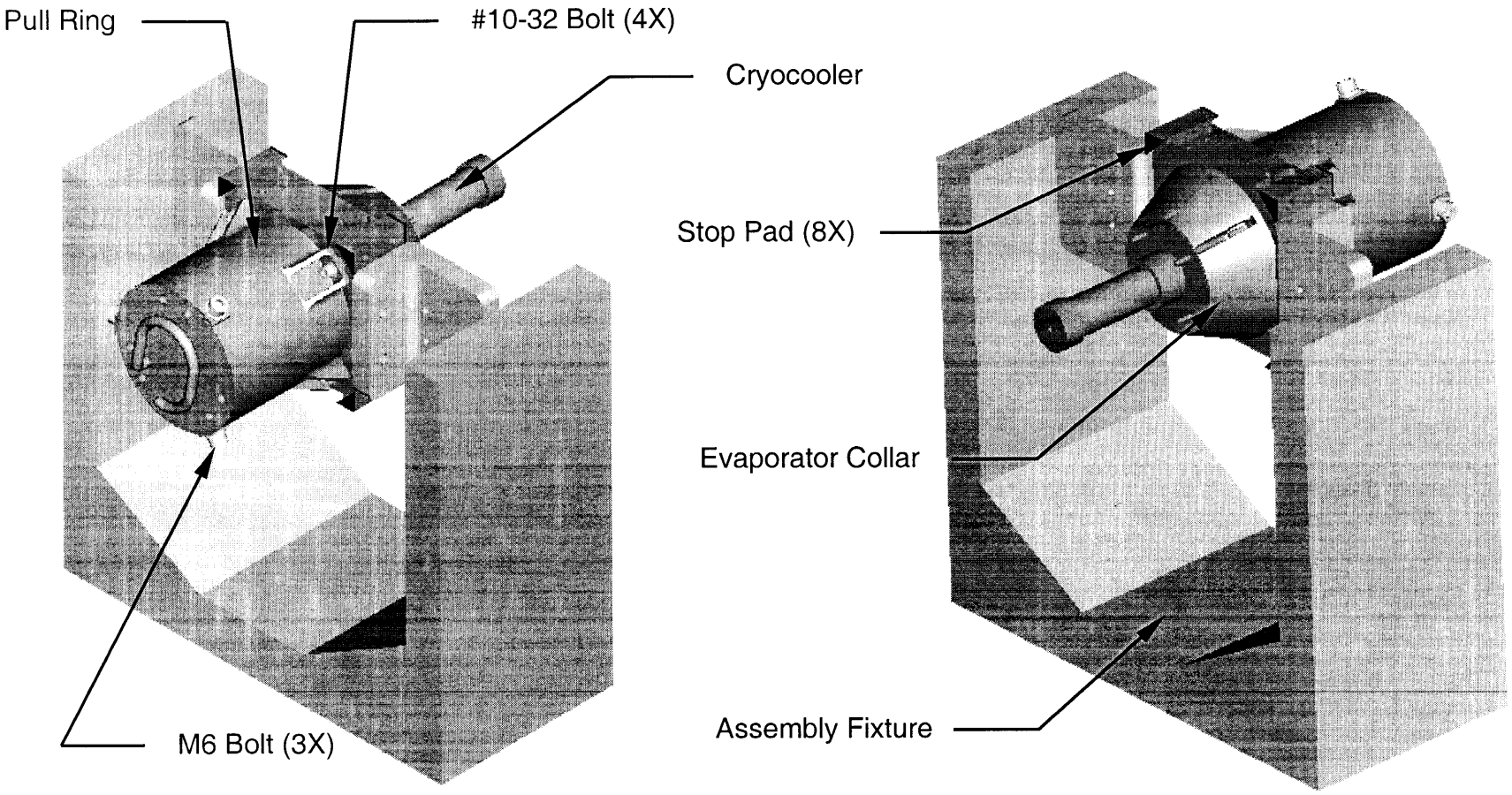

- Attach Pull Ring and Evaporator Collar (with pads) to Cryocooler
- Attach Cryocooler Assembly to Assembly Fixture

Assembly – Step 1b

- Nominal gap of 0.100" between Pull Ring and Collar
  - Allows for loose Cryocooler tolerances
  - Close gap to 0.010" max with peelable Pull Ring Shims
- Collar includes 0.005" gap on internal surfaces for Nusil

Assembly – Step 2a

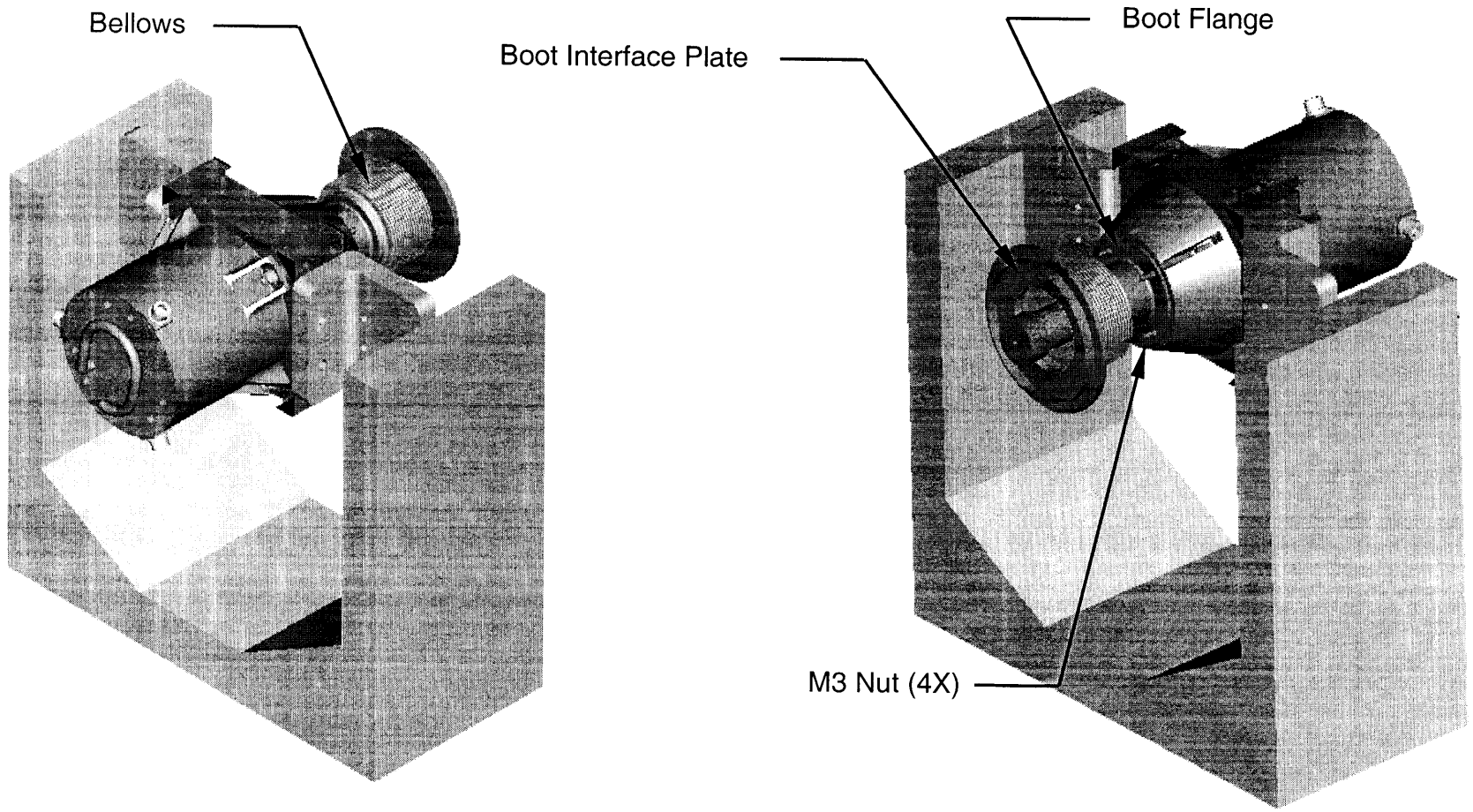

- Weld Bellows to Boot Flange and to Boot Interface Plate
- Attach Bellows Assembly to Cryocooler studs at four places

Assembly – Step 2b

- Bellows assembly welded off-line
- Two o-ring groves on Boot Flange to allow for vacuum seal to Cryocooler shaft
  - No test port required
  - Chamfer on Cryocooler required (not on ICD)
- Boot Flange and Boot Interface Plate are CRES 410 for magnetic shielding
  - Sized to match off-the-shelf Bellows part
- Bellows
  - Vendor identified: Senior Metal Bellows, division of Senior Flexonics
  - Welded design is less stiff, has longer life
  - Off-the-shelf material is CRES 347
  - Available in CRES 410 with increased expense
  - Rated for 50 psi minimum pressure load
- Weldability of CRES 410 to itself and to CRES 347 is low risk

Assembly – Step 3a

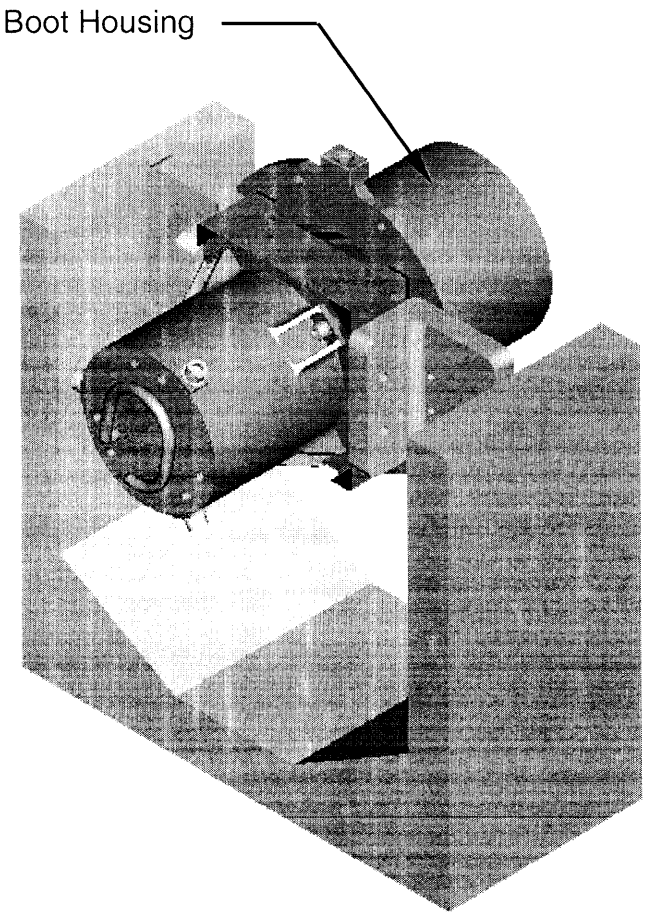

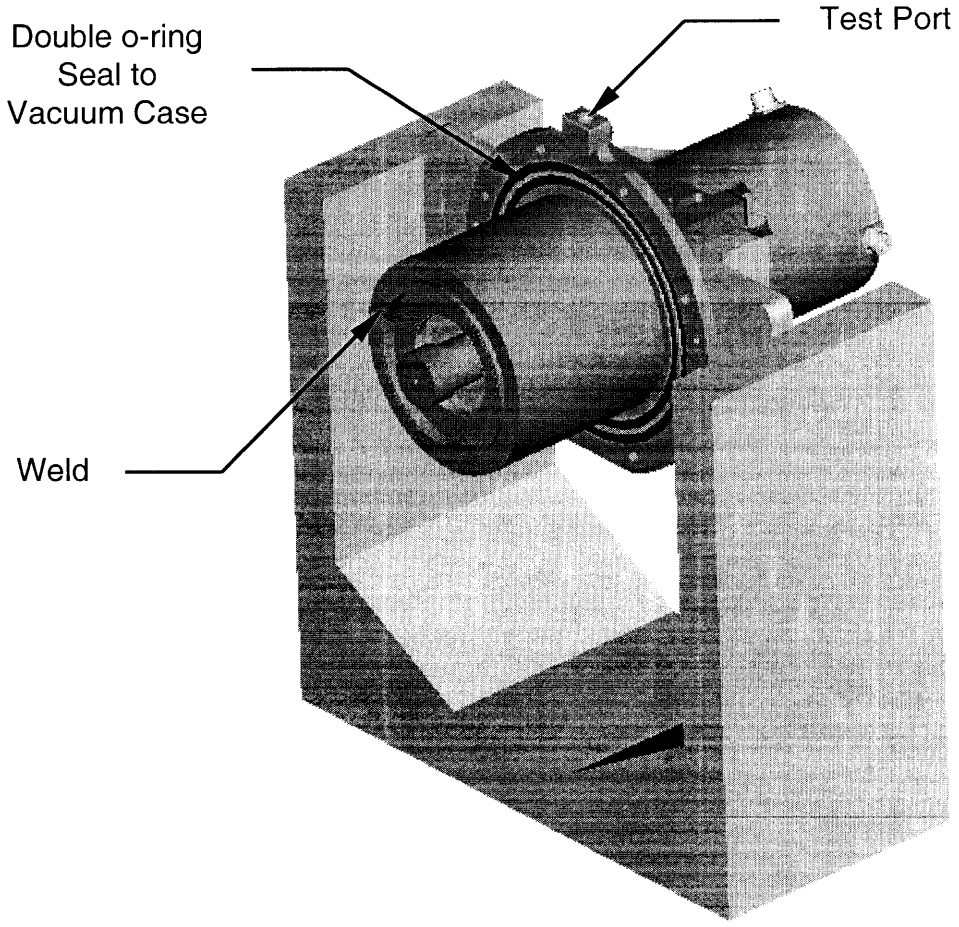

- Attach Boot Housing to Assembly Fixture
- Weld Boot Housing to Boot Interface Plate

Assembly – Step 3b

- Boot Interface Plate and Boot Housing
  - Designed to accommodate three cut-offs and re-weldings (allows access to items internal to Boot Housing)

- Cryocooler cold tip is pneumatically sealed within vacuum case for ground testing pressure differential

- Boot Housing includes test port to test inner o-ring seal
  - Test fitting replaced with plug prior to launch
  - Port, fitting and plug are standard design in accordance with MS33649 (straight pipe thread)

- Use threaded inserts to attach Boot Housing to Assembly Fixture to avoid scratching Boot Housing vacuum seal surface

Assembly – Step 4a

- Attach two Blade Flexures to Evaporator Collar with shear pins and bolts

Assembly – Step 4b

- Blade Flexure
  - Allows for motion only in Cryocooler thrust axis (Z)
  - Pinned to avoid misalignment at assembly and shifting during launch
  - Titanium provides excellent strength while minimizing the thermal path

Assembly – Step 5

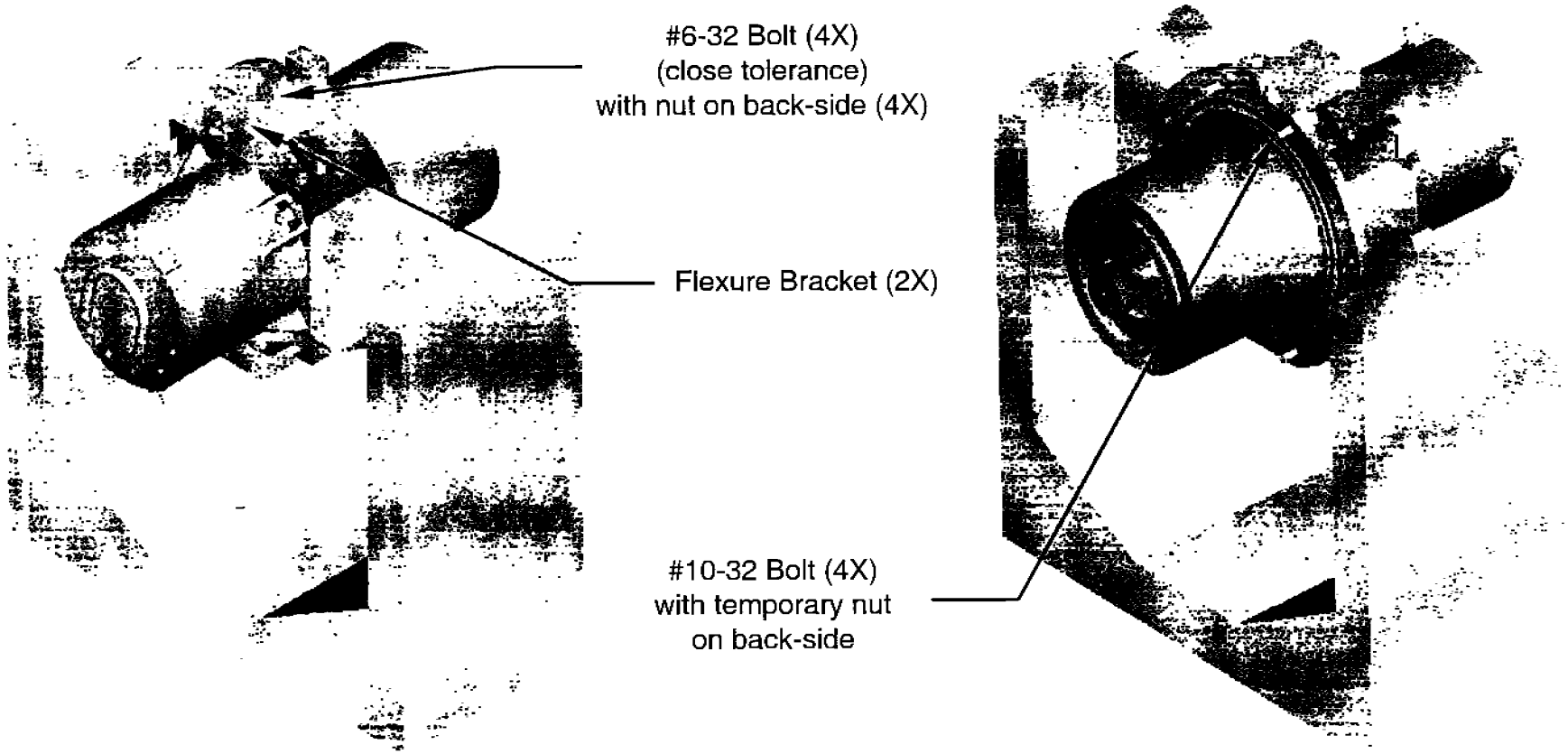

- Attach two Flexure Brackets to Blade Flexures to Boot Housing
- Close tolerance bolts minimize flexure shifting during launch
- Use nylon washers on back side of Boot Housing to avoid scratching vacuum seal surface

Assembly – Step 6a

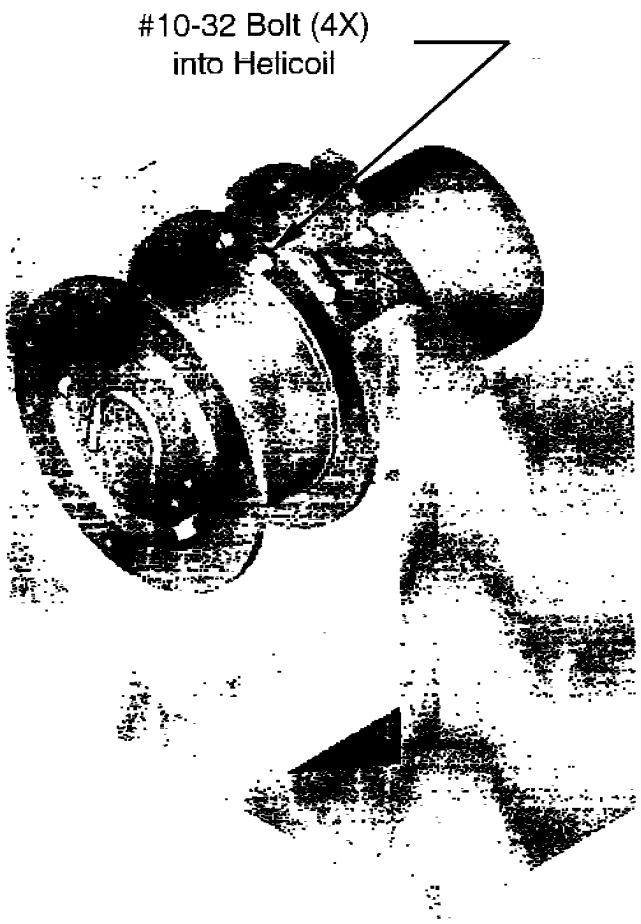

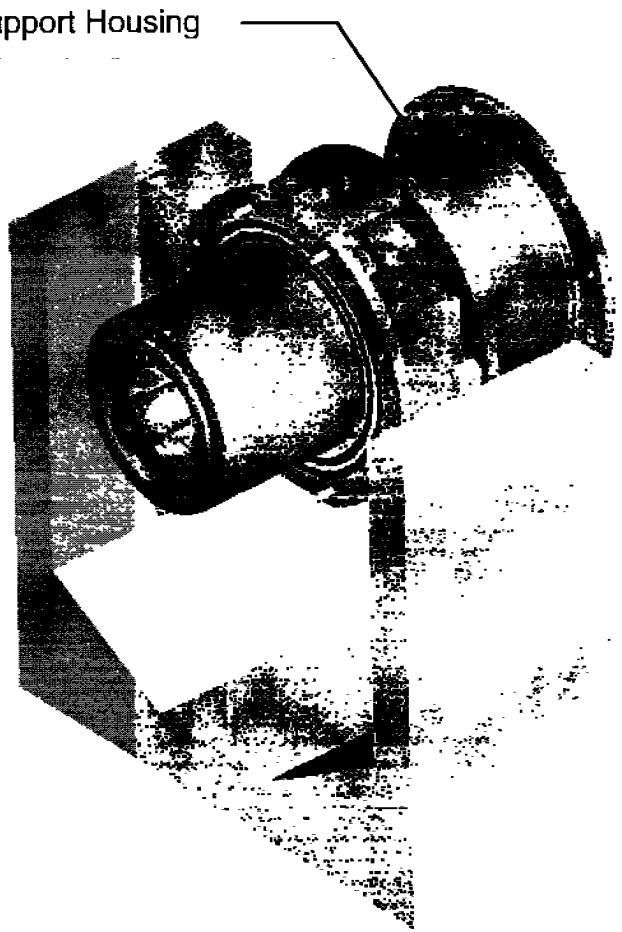

- Attach Support Housing to two Flexure Brackets

Assembly – Step 6b

- Support Housing
  - Fabricated from Torlon (30% glass-filled thermoplastic) to reduce thermal path
  - Shell wall thickness 0.06" to reduce thermal path
  - Torlon vendor identified: Boedecker Plastics, Inc.
    - » Properties defined for compression molded part
    - » Stock sizes large enough to manufacture part

Assembly – Step 7a

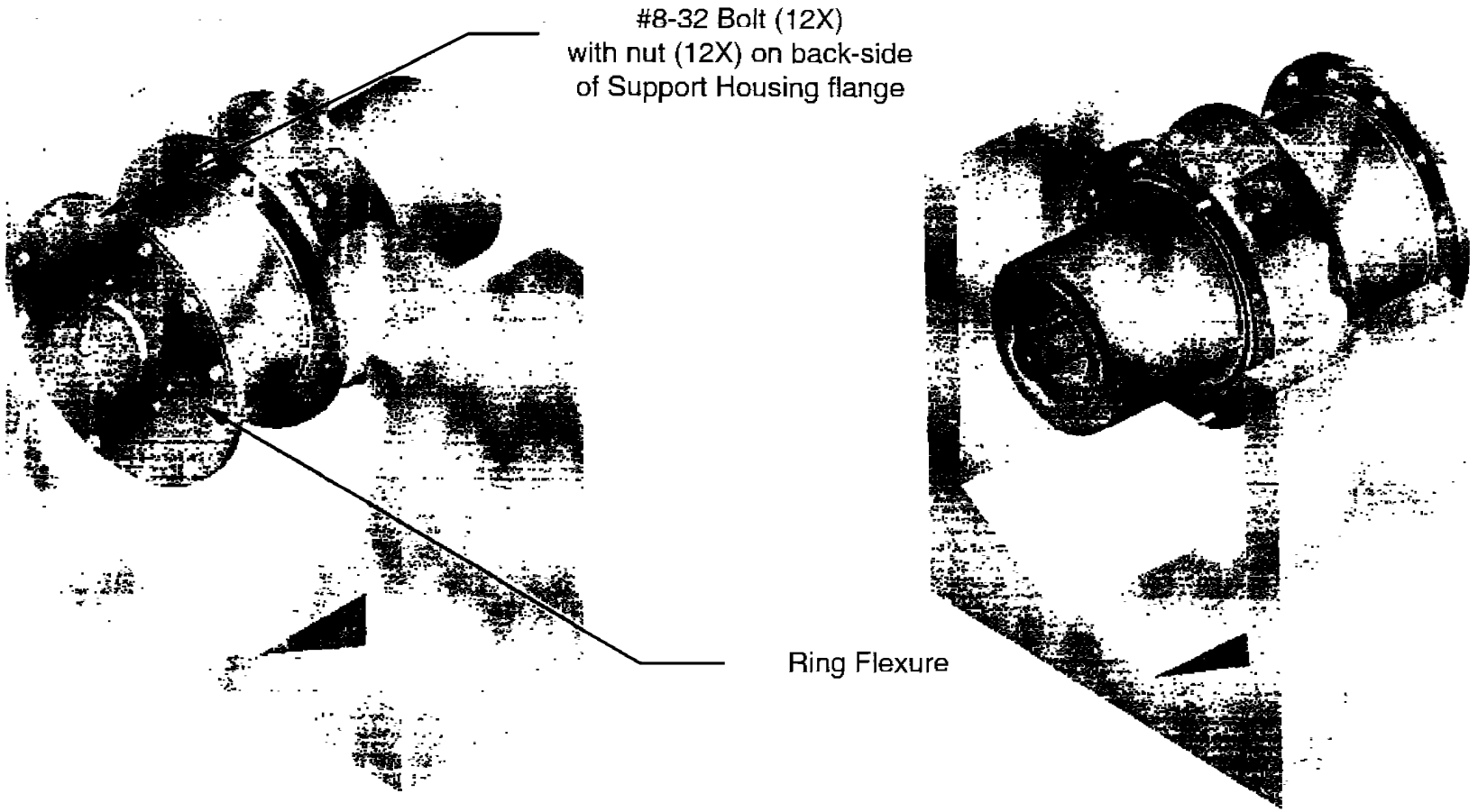

- Attach Ring Flexure to Support Housing

Assembly – Step 7b

- Ring Flexure
  - Allows for motion only in Cryocooler thrust axis (Z)
  - Primary load path for Z-axis launch loads
  - Titanium provides excellent strength with minimal thermal path
  - Geometry optimized to meet frequency requirements and reduce stresses
    - » Minimum thickness is 0.016”
  - Clears the Cryocooler fill tube

Assembly – Step 8

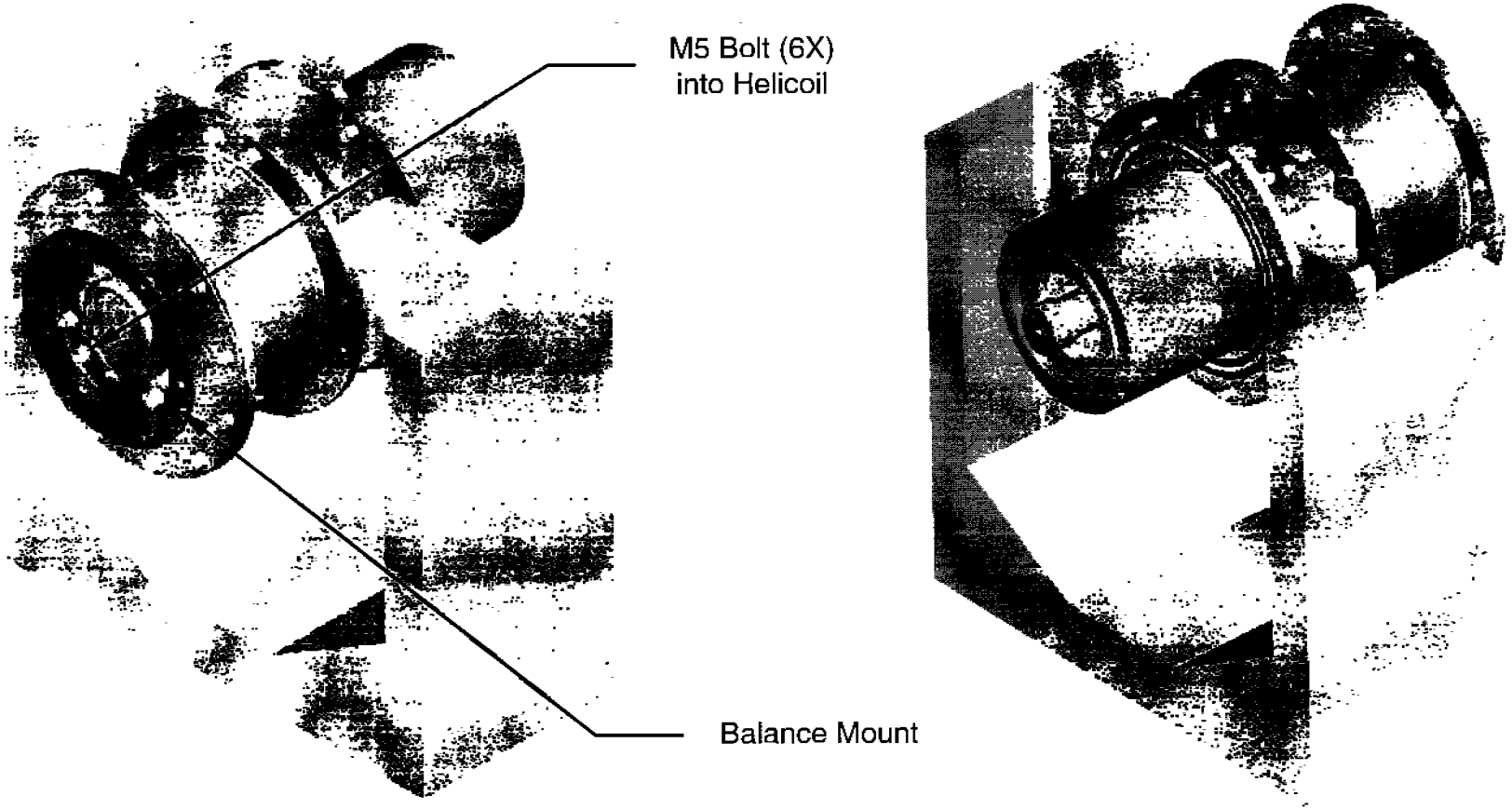

- Attach Balance Mount to Cryocooler and Ring Flexure (trapped)
- Balance Mount clears the Cryocooler fill tube

Assembly – Step 9

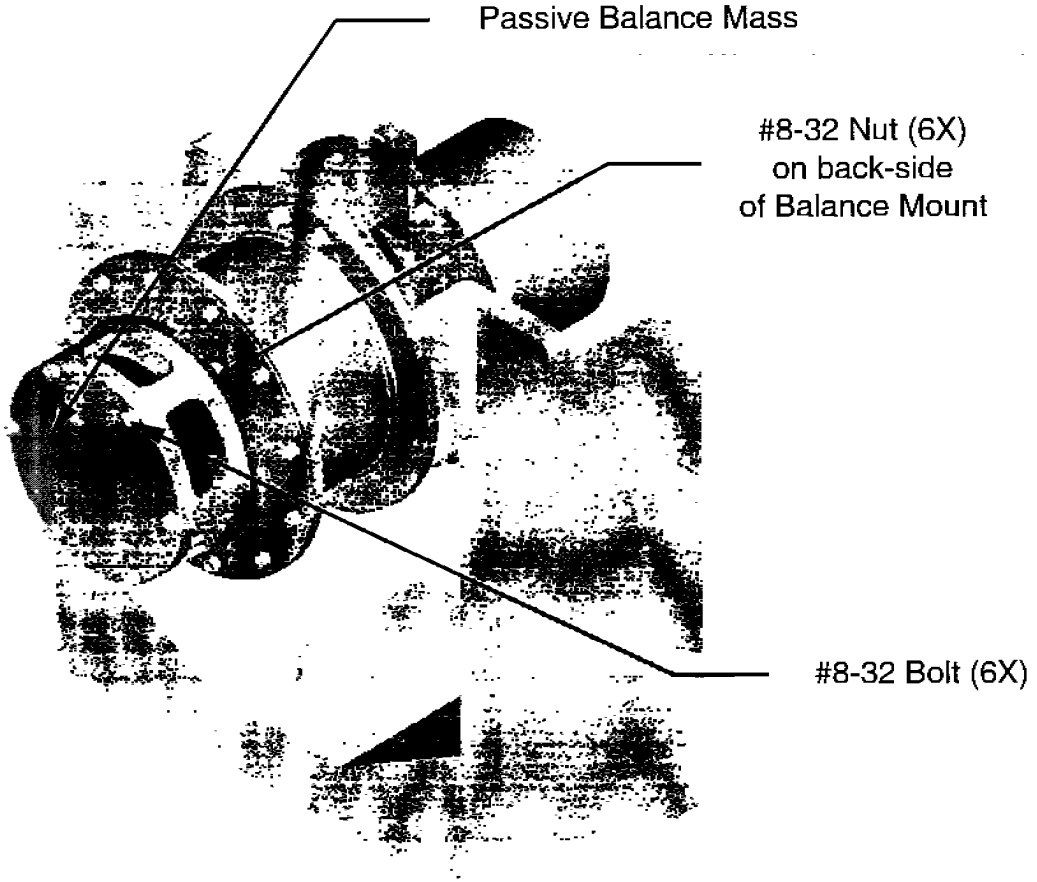

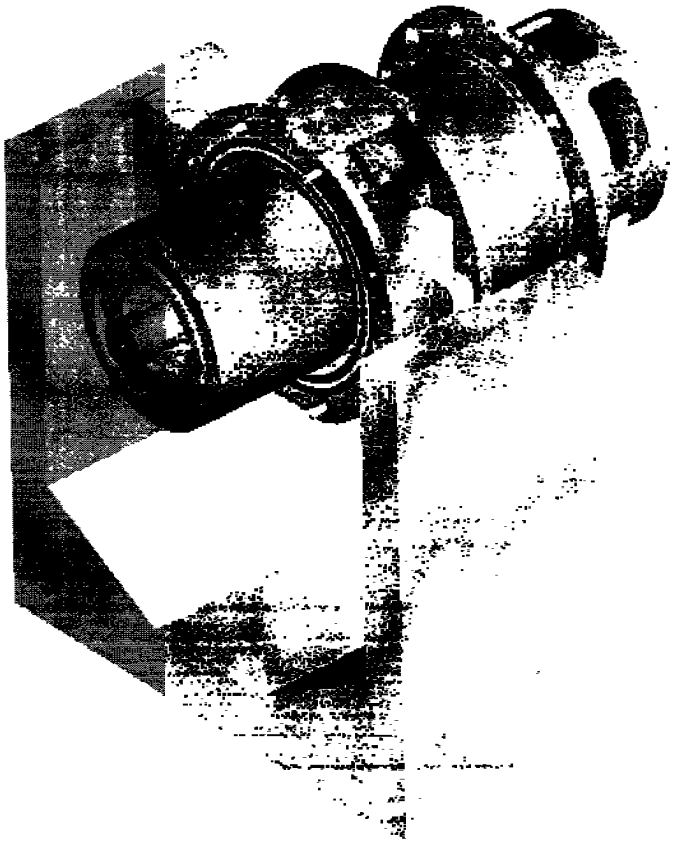

- Attach Passive Balance Mass to the Balance Mount

Assembly – Step 10

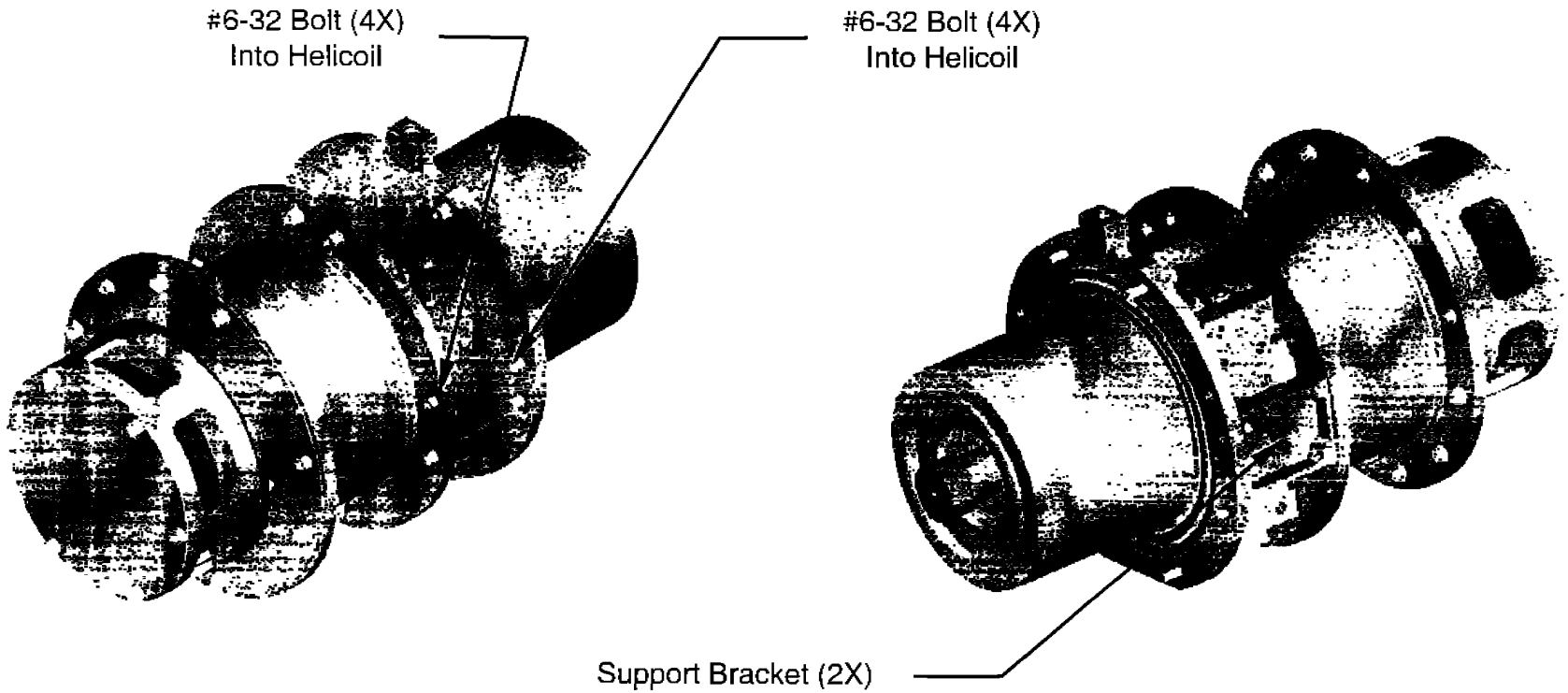

- Remove Cryocooler Assembly from the Assembly Fixture
- Attach Support Brackets between Boot Housing and Support Housing

Assembly – Step 11

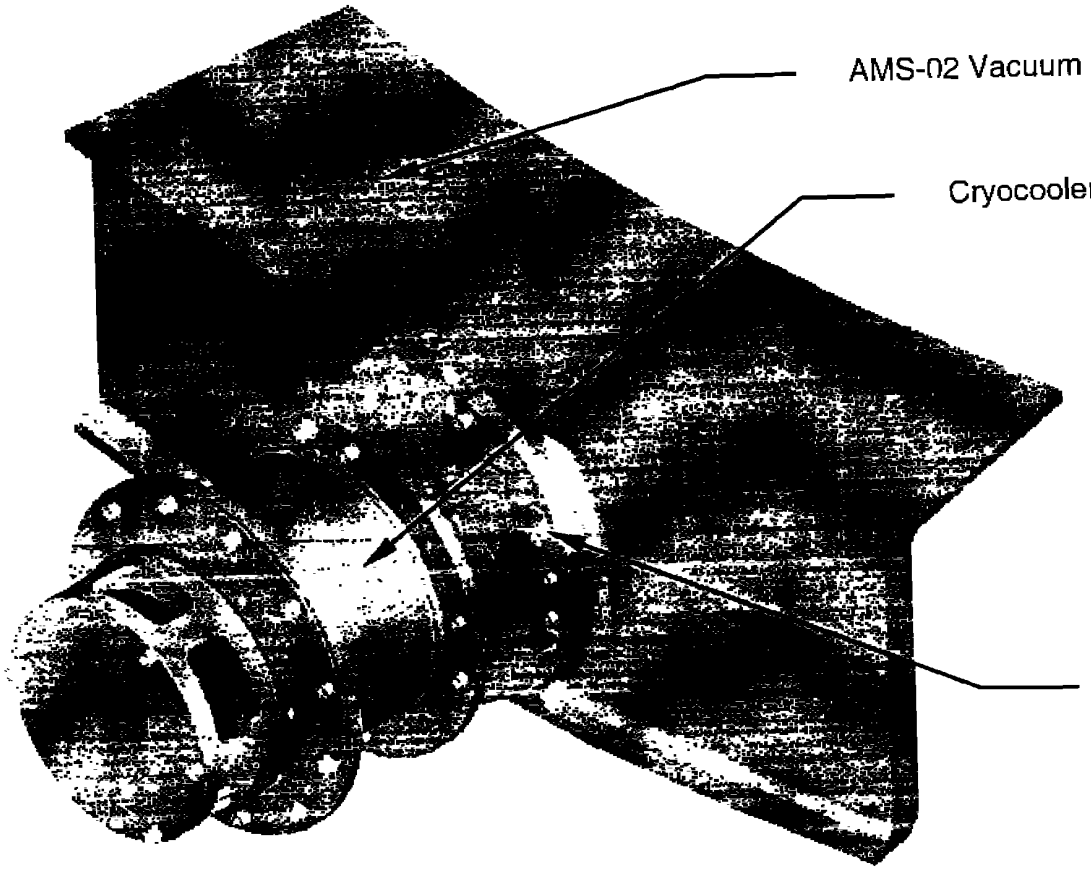

- Install Cryocooler Assembly into Vacuum Case

Assembly – Step 12

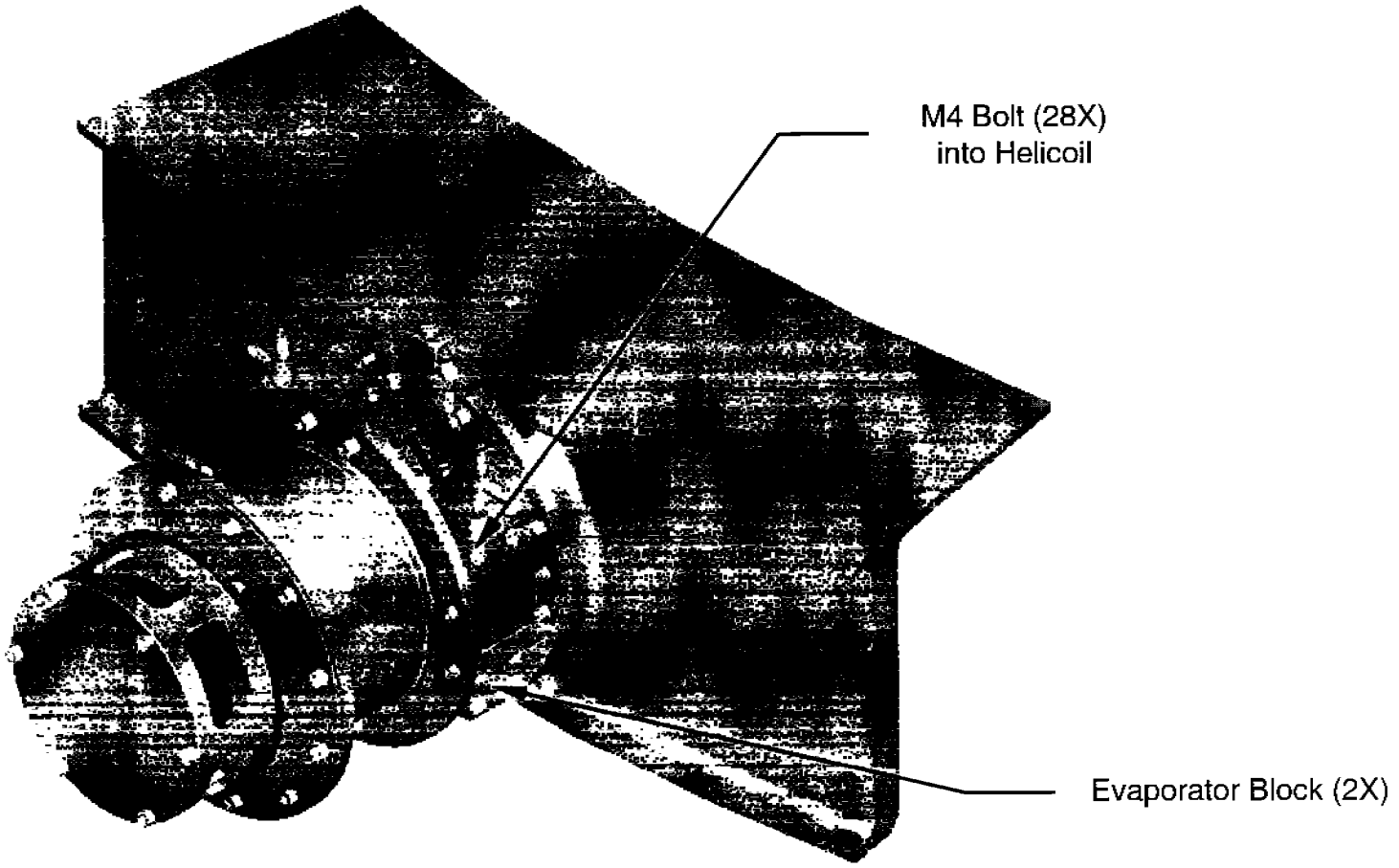

- Attach Evaporator Blocks to the Cryocooler Assembly (requires removal of Support Brackets)

Power/Sensor Connector Brackets

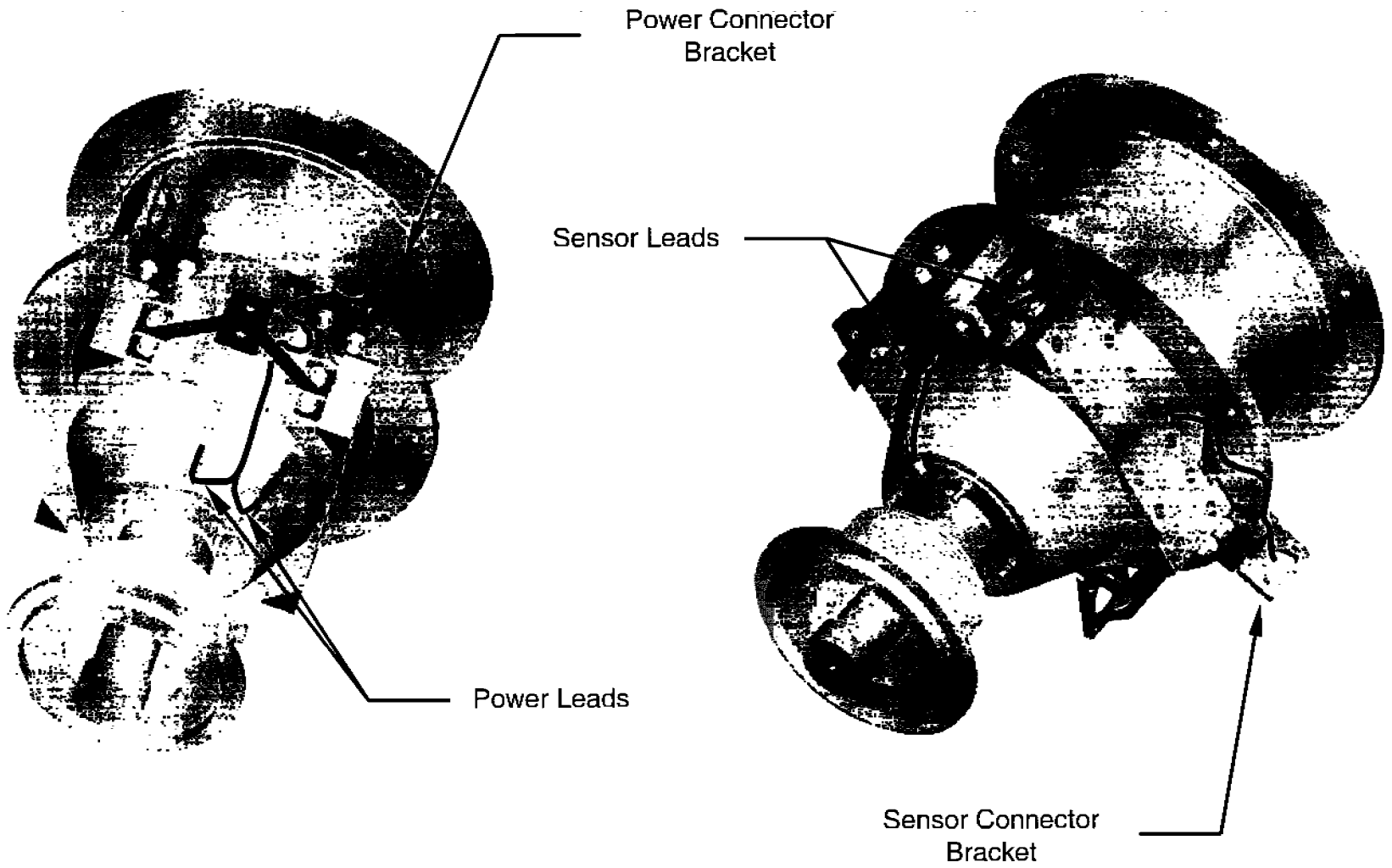

Electrical Terminations

Description	Device	Cable	Connector
Cooler Power	Sunpower M87 Cooler	2 strands 16 AWG	ITT Cannon 13 pin, round MS27508E10F35S
Collar Temp Sensor	Dallas Semiconductor DS18520	3 strands 24 AWG	Airborn 15 pin, MM-222-015-261-22WD
Body Temp Sensor	Dallas Semiconductor DS18520	3 strands 24 AWG	Airborn 15 pin, MM-222-015-261-22WD

Mass Properties Summary

Drawing Number	Part Title	Weight per Item (lbs)	Quantity	Weight of Quantity (lbs)	Weight of Quantity (kg)
B8163	EVAPORATOR COLLAR	3.40	1	3.40	1.54
B8164	PULL RING	0.24	1	0.24	0.11
B8165	BALANCE MOUNT	0.20	1	0.20	0.09
B8166	RING FLEXURE	0.13	1	0.13	0.06
B8167	SUPPORT HOUSING	0.54	1	0.54	0.24
B8168	SUPPORT BRACKET	0.04	2	0.08	0.04
B8169	FLEXURE BRACKET	0.08	2	0.16	0.07
B8173	PAD, STOP	0.002	8	0.02	0.01
B8174	INTERFACE PLATE, BOOT	0.29	1	0.29	0.13
B8175	FLANGE, BOOT	0.17	1	0.17	0.08
B8176	HOUSING, BOOT	1.91	1	1.91	0.87
B8177	BLADE FLEXURE	0.03	2	0.06	0.03
B8178	SHIM	0.005	4	0.02	0.01
	SUNPOWER CRYOCOOLER	6.98	1	6.98	3.17
	BALANCE MASS	1.73	1	1.73	0.78
	BELLOWS	0.09	1	0.09	0.04
	EVAPORATOR BLOCK	0.33	2	0.66	0.30
	MISCELLANEOUS (HARWARE, O-RINGS, ETC.)	0.50	1	0.50	0.23
	TOTAL (NO CONTINGENCY)			17.2	7.8

- Items not included:
  - Connector Brackets for thermal sensors and power leads
  - Wiring
  - Blanketing
  - LHP transport lines and brackets
- Parts associated with moving mass are highlighted
  - Total moving mass = 13.5 lbs (6.1 kg)

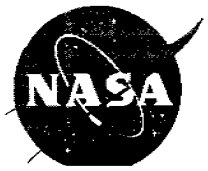

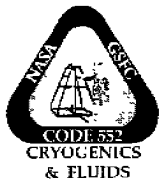

Drawing Status Summary

SWALES AEROSPACE

Drawing Number	Drawing Title	Material Specification	Quantity	Layout Complete	Drawing Created	Checked	Released
B8163	EVAPORATOR COLLAR	Copper Bar C102-H04	1	X	X	X	
B8164	PULL RING	Aluminum 6061-T651	1	X	X	X	
B8165	BALANCE MOUNT	Aluminum 6061-T651	1	X	X	X	
B8166	RING FLEXURE	Titanium Ti-6Al-4V	1	X	X	X	
B8167	SUPPORT HOUSING	Torlon 5530 Compression	1	X	X	X	
B8168	SUPPORT BRACKET	Aluminum 6061-T651	2	X	X	X	
B8169	FLEXURE BRACKET	Aluminum 6061-T651	2	X	X	X	
B8170	ASSEMBLY FIXTURE	Aluminum 6061-T651	1	X			
B8171	SENSOR CONNECTOR, BRACKET	Aluminum 6061-T651	1	X			
B8172	POWER CONNECTOR BRACKET	Aluminum 6061-T651	1	X			
B8173	PAD, STOP	Viton	8	X	X	X	
B8174	INTERFACE PLATE, BOOT	CRES 410	1	X	X	X	
B8175	FLANGE, BOOT	CRES 410	1	X	X	X	
B8176	HOUSING, BOOT	CRES 410	1	X	X	X	
B8177	BLADE FLEXURE	Titanium Ti-6Al-4V	2	X	X	X	
B8178	SHIM, PULL RING	Aluminum 6061-T6	4	X	X	X	
B8179	EVAPORATOR BLOCK, DUMMY	Aluminum 6061-T651	2				
B8180	ASSEMBLY, CRYO COOLER	--	1	X			

Risk Assessment of Machining & Assembly

Drawing Number	Drawing Title	Material Specification	Quantity	Manufacturability	Technology Risk
B8163	EVAPORATOR COLLAR, AMS02	Copper Bar C102-H04	1	Standard	Low
B8164	PULL RING, AMS02	Aluminum 6061-T651	1	Standard	Low
B8165	BALANCE MOUNT, AMS02	Aluminum 6061-T651	1	Standard	Low
B8166	RING FLEXURE, AMS02	Titanium Ti-6Al-4V	1	Complex NDI Required	Low
B8167	SUPPORT HOUSING, AMS02	Torlon 5530 Compression Molded	1	Standard	Low
B8168	SUPPORT BRACKET, AMS02	Aluminum 6061-T651	2	Standard	Low
B8169	FLEXURE BRACKET, AMS02	Aluminum 6061-T651	2	Standard	Low
B8173	PAD, STOP AMS02	Viton	8	Standard	Low
B8174	INTERFACE PLATE, BOOT AMS02	CRES 410	1	Standard	Moderately susceptible to stress corrosion cracking Weld risk mitigation
B8175	FLANGE, BOOT AMS02	CRES 410	1	Standard	Moderately susceptible to stress corrosion cracking Weld risk mitigation
B8176	HOUSING, BOOT AMS02	CRES 410	1	Standard	Moderately susceptible to stress corrosion cracking Weld risk mitigation
B8177	BLADE FLEXURE AMS02	Titanium Ti-6Al-4V	2	Standard NDI Required	Low
B8178	SHIM, PULL COLLAR AMS02	Aluminum 6061-T6	4	Standard	Low
B8180	ASSEMBLY, CRYO COOLER AMS02	--	1	Standard	Low

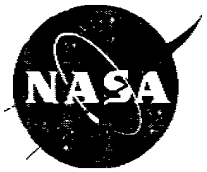

SWALES AEROSPACE

Alpha Magnetic Spectrometer (AMS-02) Cryocooler Structural Analysis

Perry Wagner – Structural Analysis Group
Phone Number: 301-902-4527
Email: pwagner@swales.com

Structural Analysis Introduction

- Structural requirements/load cases
  - Loads/testing levels defined
- Material allowables
- Finite element model
- Analysis results
  - Normal modes
  - Maximum deflections
  - Random vibration spec
- Margin of safety summary table
- Fracture classification
- Summary

Structural Requirements (1)

- Fundamental Frequency
  - Above 35 Hz (Shuttle requirement)
  - Below 50 Hz in Cryocooler thrust axis (vibration isolation)
- Quasi-static Loads
  - X=±14.4G, Y=±3.6G, Z=± 3.6G
  - X=±3.6G, Y=±14.4G, Z=±3.6G
  - X=±3.6G, Y=±3.6G, Z =±14.4G
- GEVS Workmanship Random Vibration Input
  - Peak PSD = .04 G^2/Hz
  - Overall G_{RMS} = 6.8
  - 60 seconds per axis
- 1 atmosphere pressure differential (ground test)

Structural Requirements (2)

- Factors of Safety
  - Yield = 1.25
  - Ultimate = 2.0
- Fracture classification of all parts required
  - 3 launch/landings
  - 3 operational years plus 2 contingency years on ISS
- Miscellaneous
  - No kick-load requirement
  - Limit Cryocooler travel during launch to ±0.12”

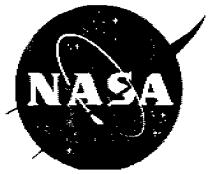

Loads/Test Definition (1)

SWALES AEROSPACE

- Lockheed-Martin analysis/test approach (email dated 12/21/01):
  - Analyze to reduced quasi-static loads 14.4/3.6/3.6 (reduced from 40/10/10)
  - Analyze to trunnion random vibration levels (3.2 G_{RMS})
    - » No load amplification and some damping due to AMS-02
    - » No acoustic loads on Cryocooler assembly
  - Test to GEVS workmanship random vibration levels
    - » Use this test as a qualification test
  - Use yield and ultimate factors of safety of 1.25/2.0 (reduced from "no-test" factors of 2.0/2.6)
  - NASA/JSC has provided preliminary approval of above approach

- Higher loads require stops to limit deflections
  - Non-linear random analysis shows high impact loads at stops, Support Housing and Brackets

Loads/Test Definition (2)

- Updated structural requirements:
  - Use reduced quasi-static loads (14.4/3.6/3.6)
  - Adopt lower factors of safety (1.25/2.0)
  - Analyze to GEVS workmanship random vibration levels (6.8 G_{RMS})
  - Test to GEVS workmanship random vibration levels
  - Recommendation: Perform sine burst to 18.0G's (1.25 * 14.4) for qualification in all three axes

Not Necessary Since Min. M.S. 0.25 with F.S. = 2.0

Material Allowables

Material	Specification	Modulus (Msi)	Density (lbs/in^3)	Ftu (ksi)	Fty (ksi)	Fsu (ksi)	Fbru (ksi)	Fbry (ksi)
Aluminum 6061-T651	AMS-QQ-A-225/8	10.0	0.098	42	35	27	67	49
Ti-6Al-4V	MIL-T-9046	16.2	0.160	130	120	79	206	164
Torlon 5530	N/A	0.9	0.059	15	--	--	--	--
CRES 410	ASTM A276	30.5	0.287	70	40	--	--	--
OF Copper C102-H04	ASTM B152M	17.0	0.323	43	35	28	--	--

Stress corrosion cracking not considered to be an issue

- Aluminum 6061-T6 and Ti-6Al-4V are in accordance with MSFC-STD-3029, Table I.
- CRES 410 is classified as Table II
  - Stresses are low
  - Requires MUA waiver
- Torlon is a glass-filled composite
- Oxygen-free copper is not classified in MSFC-STD-3029

Cryocooler Assembly Finite Element Model

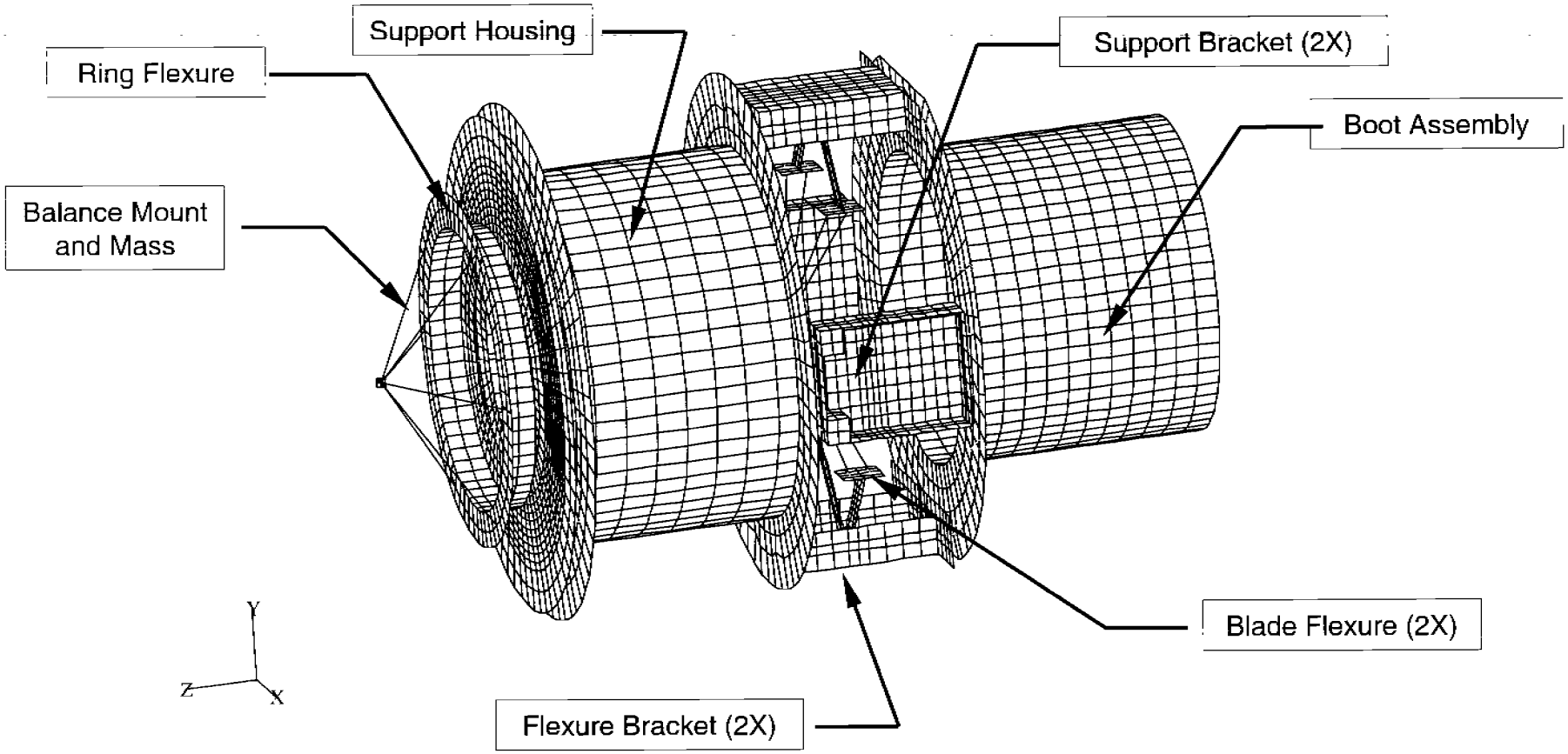

- Cryocooler, Evaporator Collar, Pull Ring and Boot Flange modeled as lumped mass
- Total moving mass is 13.5 lbs

Normal Modes Results

First mode is 43 Hz – Cryocooler mass translating in Z-axis

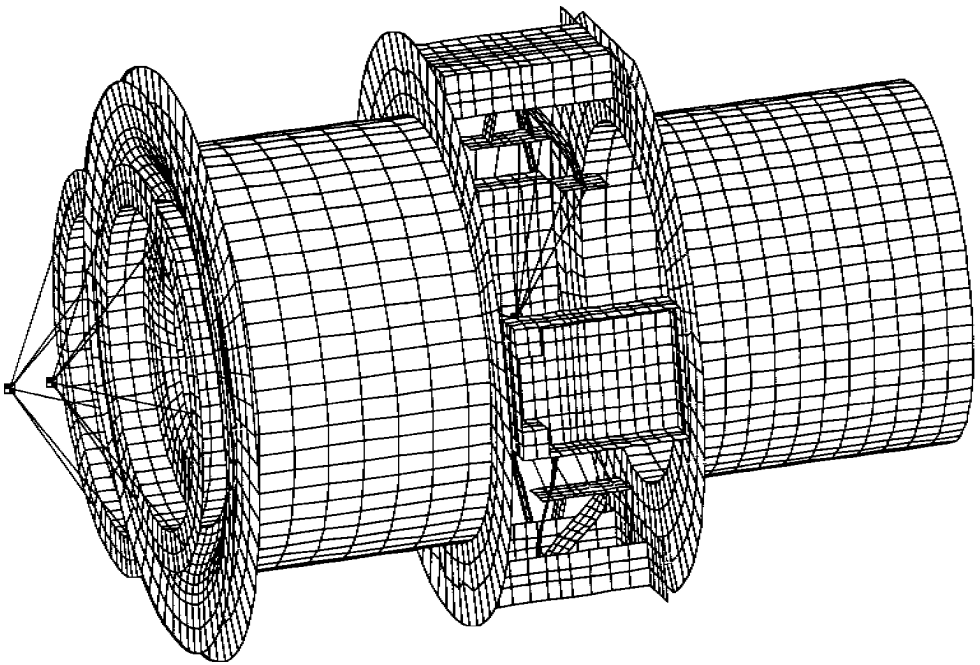

Output Set: Mode 1 42.56542 Hz
Deformed(5.609): Total Translation

- Higher order modes are well above 60 Hz Cryocooler driving mode

Deflection Results

- Maximum predicted deflection of the Cryocooler in the Z-axis due to:
  - 1 atmosphere pressure differential (ground test) is 0.016”
  - Quasi-static loads (3.6/3.6/14.4) is 0.078”
  - Random vibration spec is 0.087”
  - Sine burst testing is 0.098”

- Max Cryocooler deflection is below 0.12” allowable

Random Vibration Analysis

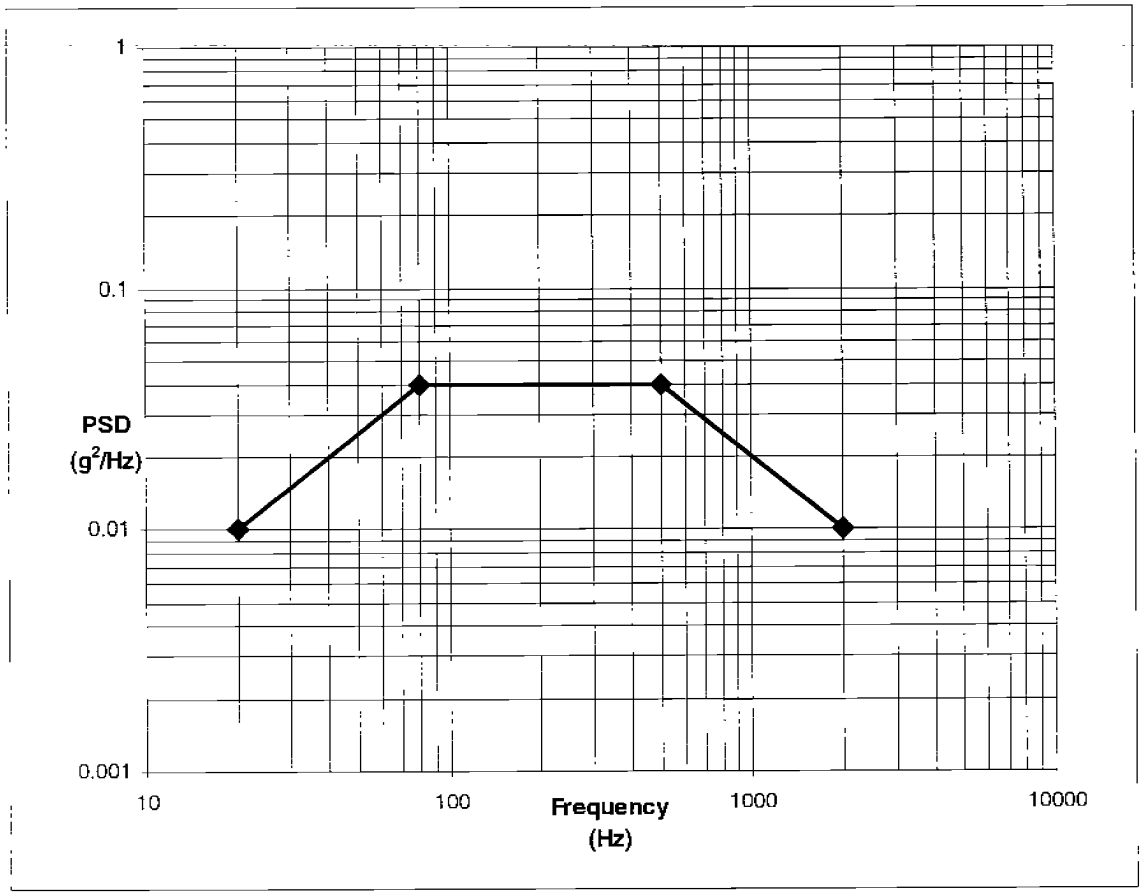

Random Vibration Spec

Miles Equation:

$$g = 3\left[\left(\frac{\pi}{2}\right)(PSD)(f_n)(Q)\right]^{0.5}$$

- PSD (at f_n= 43 Hz) = 0.021 g^2/Hz
- Assume Q = 20

Equivalent 16.0G static load

Margin of Safety Summary Table

Component Description	Material	Failure Mode	Critical Load Case	Allowable (ksi)		Minimum Margin of Safety		Associated Stress (psi)
				Yield	Ultimate	Yield	Ultimate	
Pull Ring	6061-T651	Flange Bending	Assembly Pre-load	35	42	+4.83	+3.37	4,803
Balance Mount	6061-T651	Bending	Launch (14.4 / 3.6 / 3.6)	35	42	+HIGH	+HIGH	1,076
Ring Flexure	Ti-6Al-4V	Bending	Random Vibration (Z-axis)	120	130	+0.84	+0.25	52,085
Support Housing	Torlon 5530	Flange Bending	Launch (3.6 / 3.6 / 14.4)	--	15	--	+4.64	1,329
Flexure Bracket	6061-T651	Flange Bending	Launch (3.6 / 14.4 / 3.6)	35	42	+2.24	+1.43	8,642
Support Bracket	6061-T651	Flange Bending	Random Vibration (Y-axis)	35	42	+1.28	+0.71	12,280
Boot Assembly	CRES 410	Flange Bending	Random Vibration (Y-axis)	40	70	+HIGH	+HIGH	3,540
Blade Flexure	Ti-6Al-4V	Bending	Random Vibration (Z-axis)	120	130	+1.02	+0.37	47,581

Stresses are low in Evaporator Collar and Connector Brackets

Fracture Classification Summary Table

Component Description	Material	Resistance to Stress Corrosion Cracking	Fracture Control Classification	Fracture Critical?
Pull Ring	6061-T651	High	Low Risk Fracture Part	No
Balance Mount	6061-T651	High	Low Risk Fracture Part	No
Ring Flexure	Ti-6Al-4V	High	Safe-Life Fracture Part	Yes
Support Housing	Torlon 5530	High	Low Risk Fracture Part	No
Flexure Bracket	6061-T651	High	Low Risk Fracture Part	No
Support Bracket	6061-T651	High	Low Risk Fracture Part	No
Boot Assembly	CRES 410	Medium	Low Risk Fracture Part	No
Blade Flexure	Ti-6Al-4V	High	Safe-Life Fracture Part	Yes
Evaporator Collar	OF Copper C101	High	Low Risk Fracture Part	No

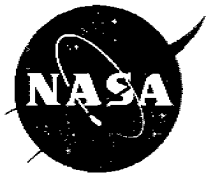

Analysis Summary

Cryocooler assembly meets all structural requirements

- Fundamental frequency in Z-axis is 43 Hz
- Positive margin of safety demonstrated for all parts due to quasi-static and random vibration load cases
  - Minimum margin of safety is +0.25 in Ring Flexure
- Maximum expected deflection is less than the allowable gap
- Sine burst test recommended for qualification testing

AMS Thermal Analysis

Topics

SWALES AEROSPACE

- Requirements
- Thermal Design
- Nodal Diagram
- Thermal Properties
- Conductance Values
- Predicted Performance
- Summary/Conclusions

AMS Thermal Analysis

Requirements

- Requirements
  - Cooler dissipation — 100 W (95 W at ring, 5 W in body)
  - Conductance from cooler to mounting surface — < 0.01 W/K
  - Conductance from cooler to evaps. via Cu collar — > 16.66 W/K … $\Delta T < 6$ K
  - Heat transfer from cooler body to Cu collar — ~ 5 W transport, $\Delta T < 2$ K

AMS Thermal Analysis

Thermal Design: Basic Approach

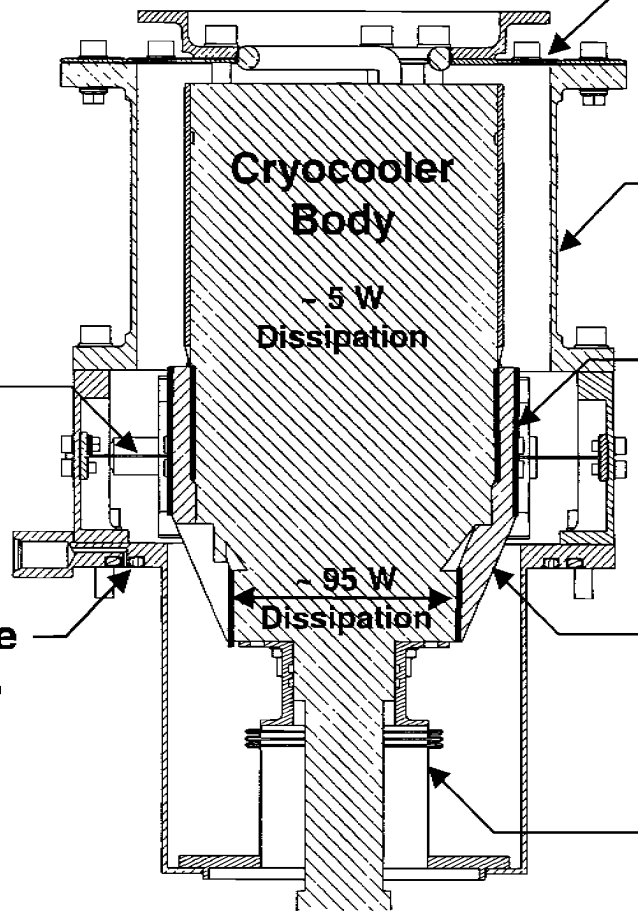

Nusil I/F Material

Foil* I/F Material
*unspecified

6Al-4V Titanium Ring
(moderately stiff flexure)

Torlon Cylinder
(thermal isolator)

Evaporator Interface
(thermal conductor)

6Al-4V Ti Flexure
(thermal isolator, soft flexure)

OFHC Cu Collar
(thermal conductor)

Mounting Interface
(double o-ring seal)

Stainless Steel Bellows (Welded) Assembly
(thermal isolator, double o-ring seal to cooler)

AMS Thermal Analysis

Thermal Design: Key Components

CODE 552 CRYOGENICS & FLUIDS

SWALES AEROSPACE

6Al-4V Titanium Ring

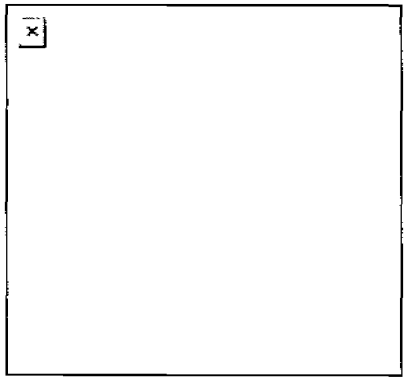

Stainless Steel Bellows Assembly

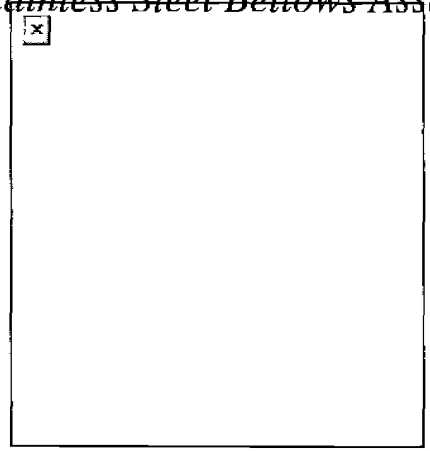

OFHC Cu Collar

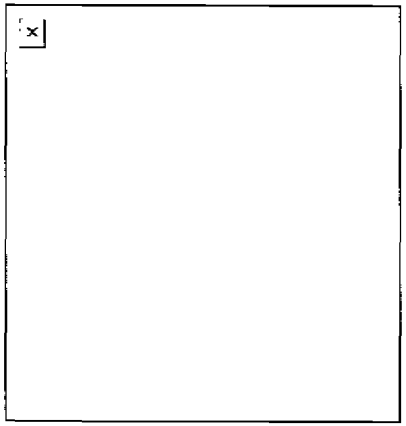

6Al-4V Titanium Flexure

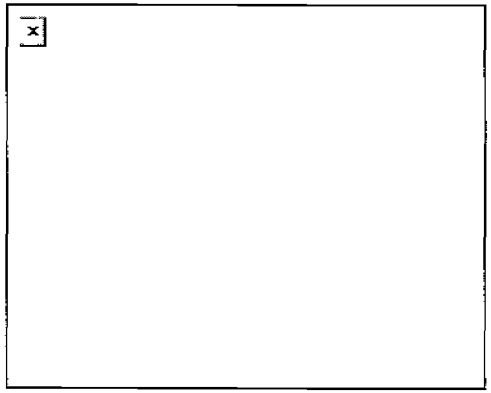

Torlon Cylinder

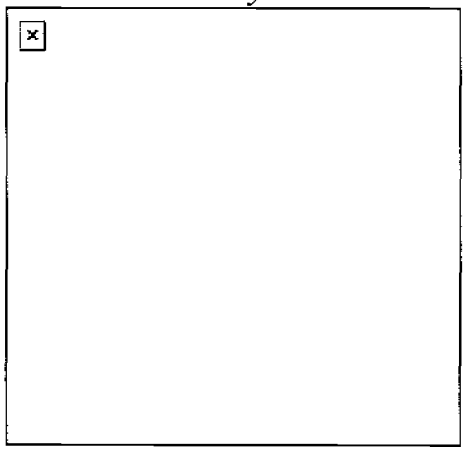

AMS Thermal Analysis

Nodal Diagram

- Nodal Diagram

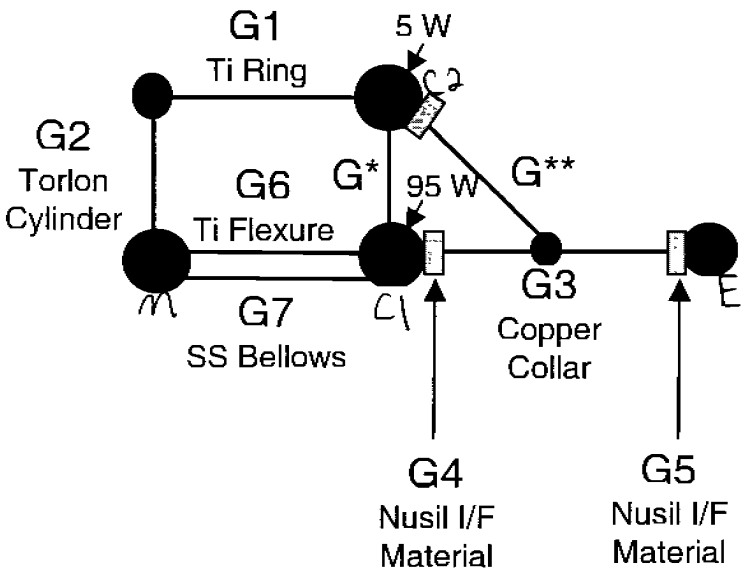

C1	= Cooler bottom
C2	= Cooler top
E	= Evaporator I/F
M	= Mounting I/F
G*	= Internal cooler coupling
G**	= Coupling of cooler top to Cu collar

AMS Thermal Analysis

Thermal Properties

- Thermal Properties at 300 K
  - Ti (6Al-4V) — k = 7.5 W/m K
  - Stainless Steel — k = 15 W/m K
  - Cu (OFHC) — k = 400 W/m K
  - Torlon — k = 0.36 W/m K (30% glass filled)
  - Nusil (I/F material) — h = 7.5 W/in^2 K
  - Foil* (I/F Material) — h = 10 W/in^2 K

    *type of foil unspecified

AMS Thermal Analysis

Conductance

- Component Geometry
  - Ti Ring — *thinnest section:* OD = 4.4", ID = 3.8", t = 0.016"
  - Torlon Cylinder — *thinnest section:* ID = 4.4", L = 2.238", t = 0.060"
  - Copper Bracket — Pro-E --> STEP file --> FEMAP --> direct conductance calc.
  - Cooler I/F — *internal surface:* D = 2.5", W = 0.75"
  - Evaporator I/F — *single surface:* L = 3.937", W = 1.181", 2 surfaces
  - Ti Flexure — *single blade:* L = 1.182", W = 0.25", t = 0.020", 4 blades
  - St. Stl. Bellows — *1/2 convolution:* OD = 2.25", ID = 1.5", t = 0.016", 30 half convols.

- Conductance

– Ti Ring	$G1 = 2 \pi k t / \ln (OD/ID)$	= 0.13	W/K
– Torlon Cylinder	$G2 = k \pi (D + 2t) t / L$	= 0.0035	W/K
– Copper Bracket	G3	= 26.8	W/K
– Cooler I/F	$G4 = h \pi D W$	= 44.2	W/K
– Evaporator I/F	$G5 = 2 h L W$	= 93.0	W/K
– Ti Flexure	$G6 = 4 k W t / L$	= 0.0032	W/K
– St. Stl. Bellows	$G7 = (1/30) 2 \pi k t / \ln (OD/ID)$	= 0.0031	W/K

AMS Thermal Analysis

Predicted Performance

- Predicted Performance
  - Conductance from cooler to mounting surface = **0.0097 W/K vs.< 0.01 W/K reqt.**
    - Path 1: (1/G1 + 1/G2)^-1 = 0.0034 W/K
    - Path 2: G6 = 0.0032 W/K
    - Path 3: G7 = 0.0031 W/K
    - **Paths 1-3 in parallel = 0.0097 W/K**
  - Conductance from cooler to evap. via Cu collar = **14.1 W/K vs. > 16.66 W/K reqt.**
    - Path 1: G4 = 44.2 W/K
    - Path 2: G3 = 26.8 W/K
    - Path 3: G5 = 93.0 W/K
    - **Paths 1-3 in series = 14.1 W/K**
  - Provide coupling from cooler body to Cu collar to transport 5 W with < 2 K ΔT
    - Two possible heat transfer paths
    - First path is via can that clamps Cu collar to cooler
    - Second path is gap between Cu collar near evaporators and cooler
      - Gap can be filled with Nusil … cross-sectional area several square inches
    - Those two paths will provide the needed coupling (> 3 W/K with Nusil-filled gap)

AMS Thermal Analysis

Summary/Conclusions

- Summary
  - Conductance from cooler to mounting surface — 0.0097 W/K vs. < 0.01 W/K reqt.
  - Conductance from cooler to evaporators via Cu collar — 14.1 W/K vs. >16.66 W/K reqt.
  - Coupling from cooler body to Cu collar — >> 3 W/K

- Conclusions
  - Isolation between cooler and mounting interface is acceptable
  - ΔT between cooler and evaporator surface expected to be 95/14.1 = 6.7 K (vs. 6.0 reqt.)
  - ΔT can be reduced by
    - Attaching Cu collar to cooler with higher performance I/F material
    - Attaching evaporators to Cu collar with higher performance I/F material
    - Increasing conductance of Cu collar via embedding higher conductance material within collar (perhaps APG) or possibly by embedding miniature heat pipes within collar
    - Above options were not pursued due to their added complexity and higher risk

Alpha Magnetic Spectrometer (AMS-02) Cryocooler

Appendix (Back-up Slides)

AMS-02 Vacuum Case

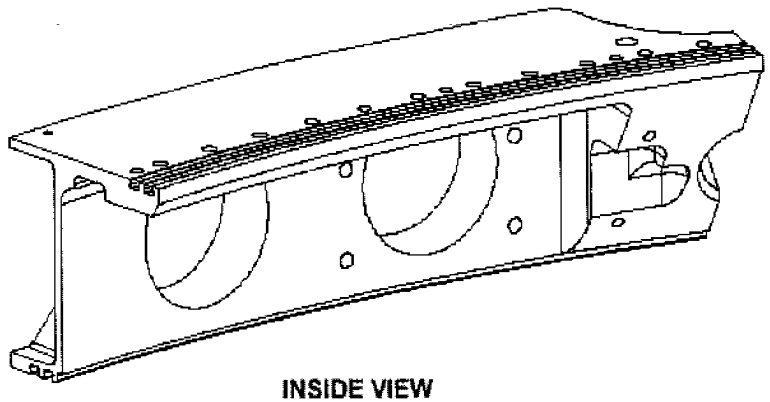

INSIDE VIEW

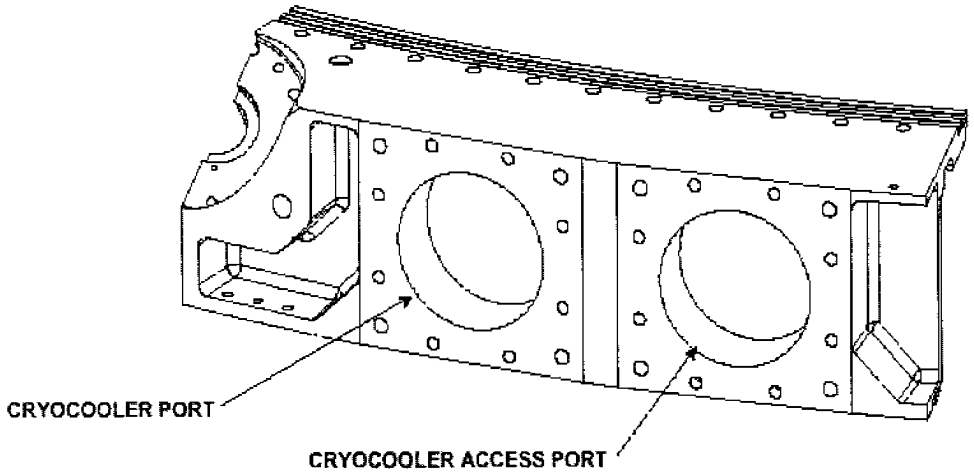

OUTSIDE VIEW

AMS-02 Vacuum Case (2)

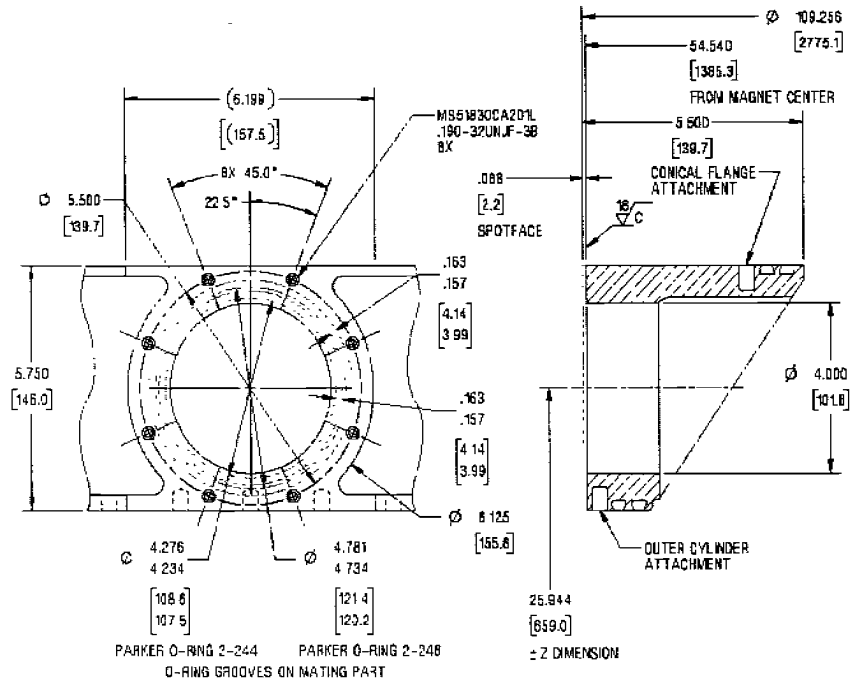

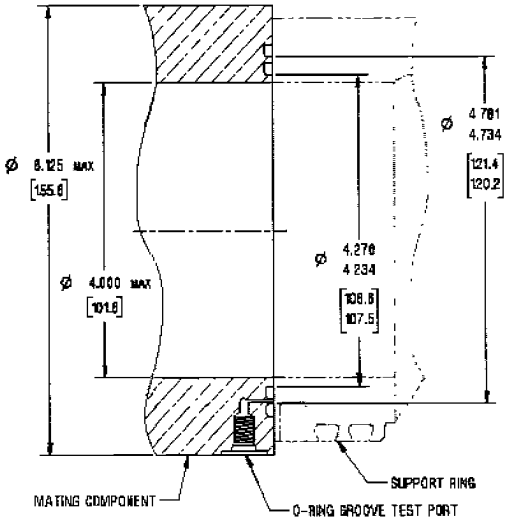

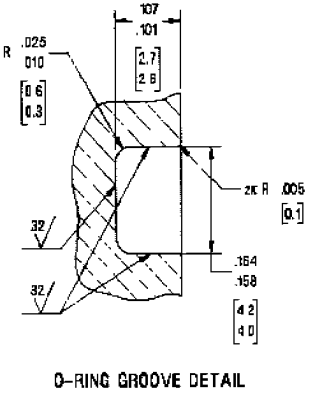

O-RING GROOVE DETAIL

- Eight #10-32 threaded inserts on 5.5" bolt circle for attachment of Cryocooler to Vacuum Case
- Double O-ring design defined

AMS-02 Vacuum Case (3)

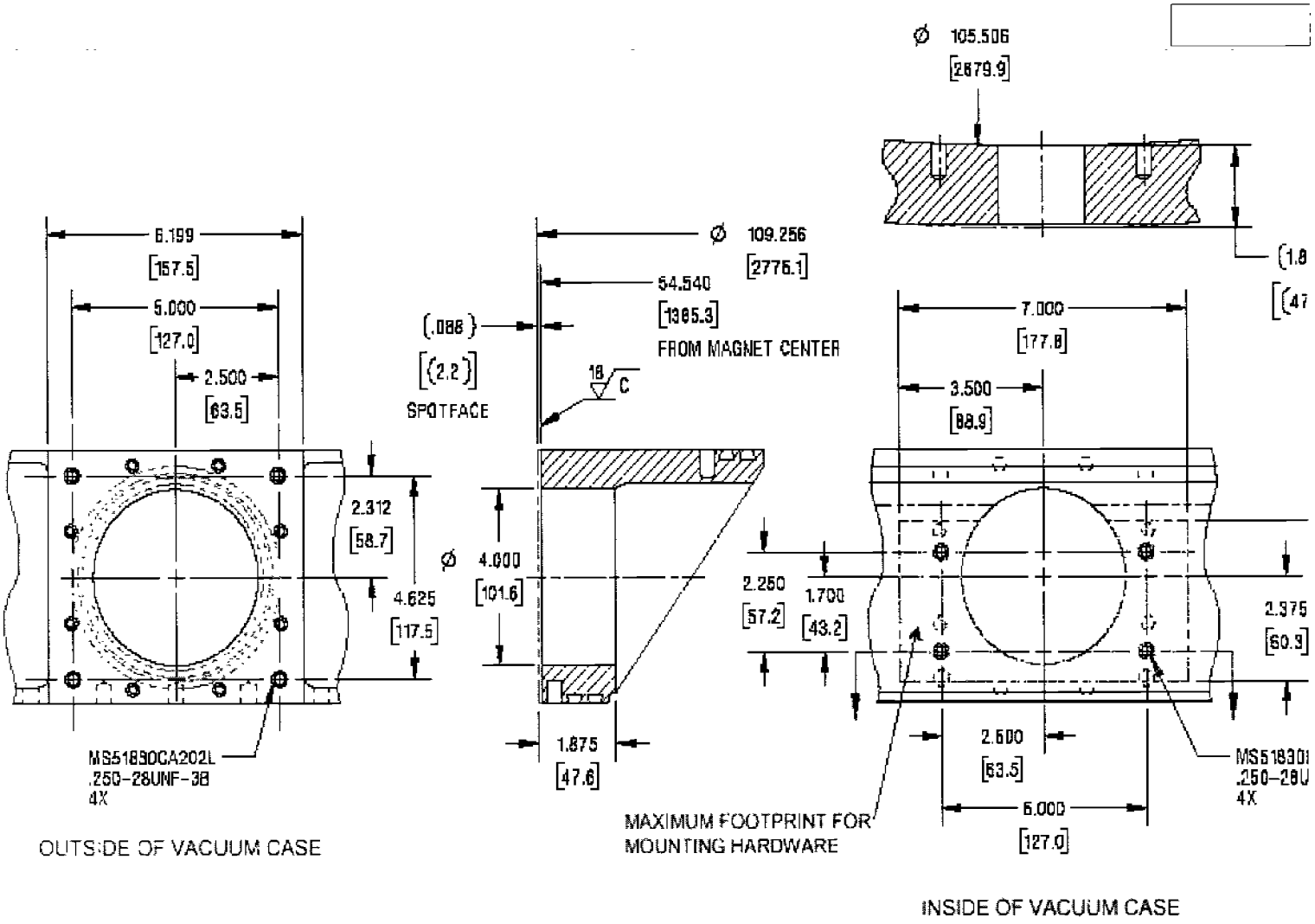

Passive Balance Mass Interface

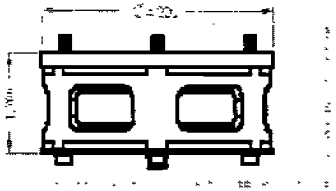

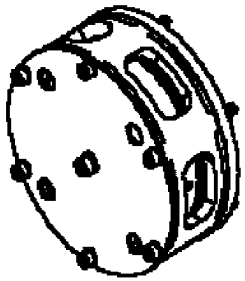

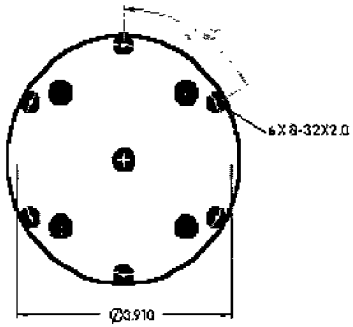

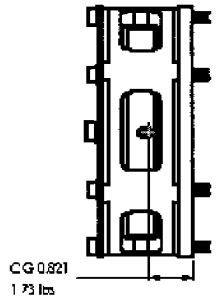

UNITS: INCHES ± 1° Caged Balancer

MATERIAL 6061 .XX ± .02 STUART BANCS
(301) 286-6618
QTY REQ. .XXX ± .005 FAX: (301) 286-1637

Evaporator Block Interface

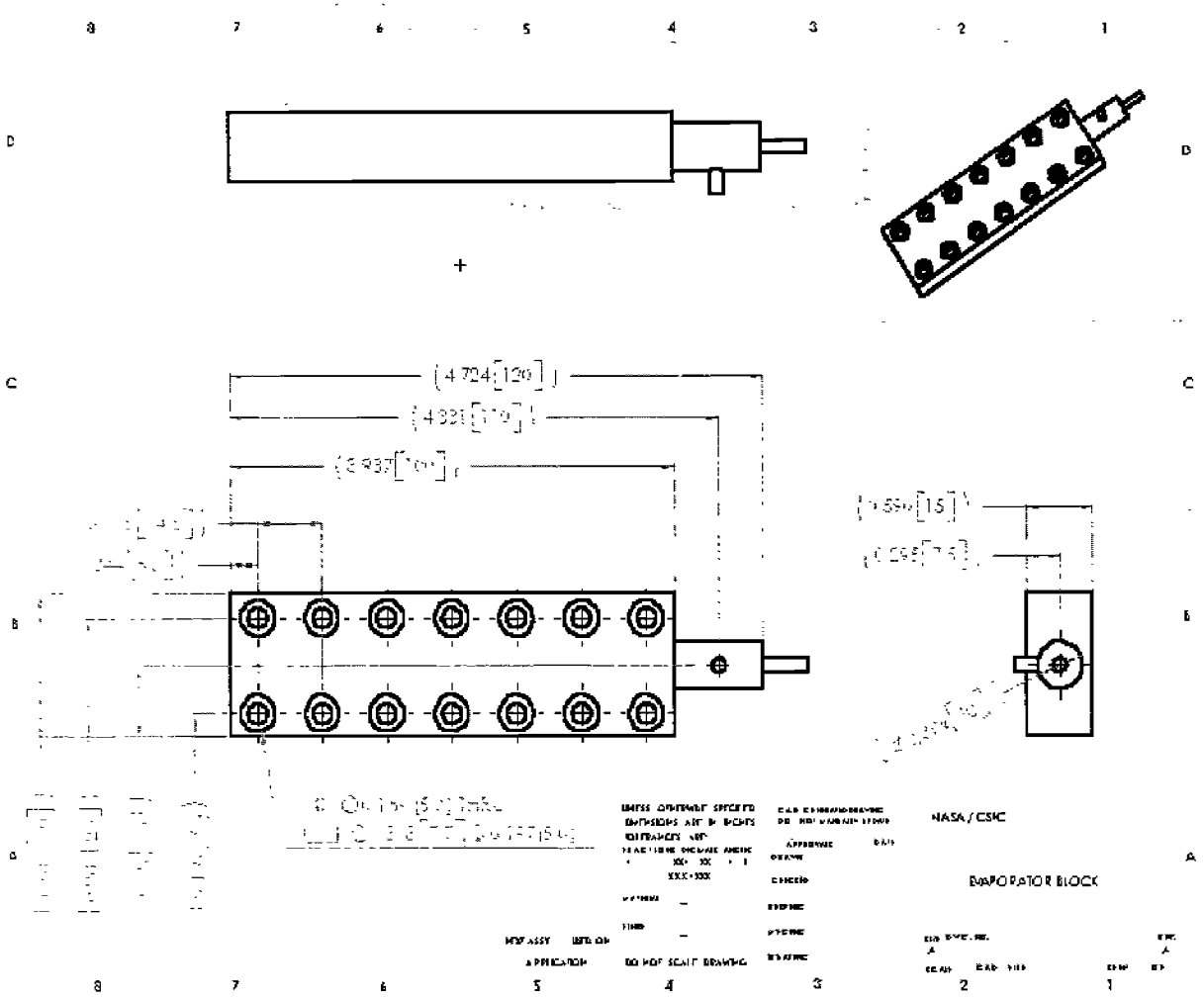

FEM Stress Analysis Results (1)

SWALES AEROSPACE

NASA GSFC CODE 552 CRYOGENICS & FLUIDS

Balance Mount
Load Case: Launch (14.4/3.6/3.6)

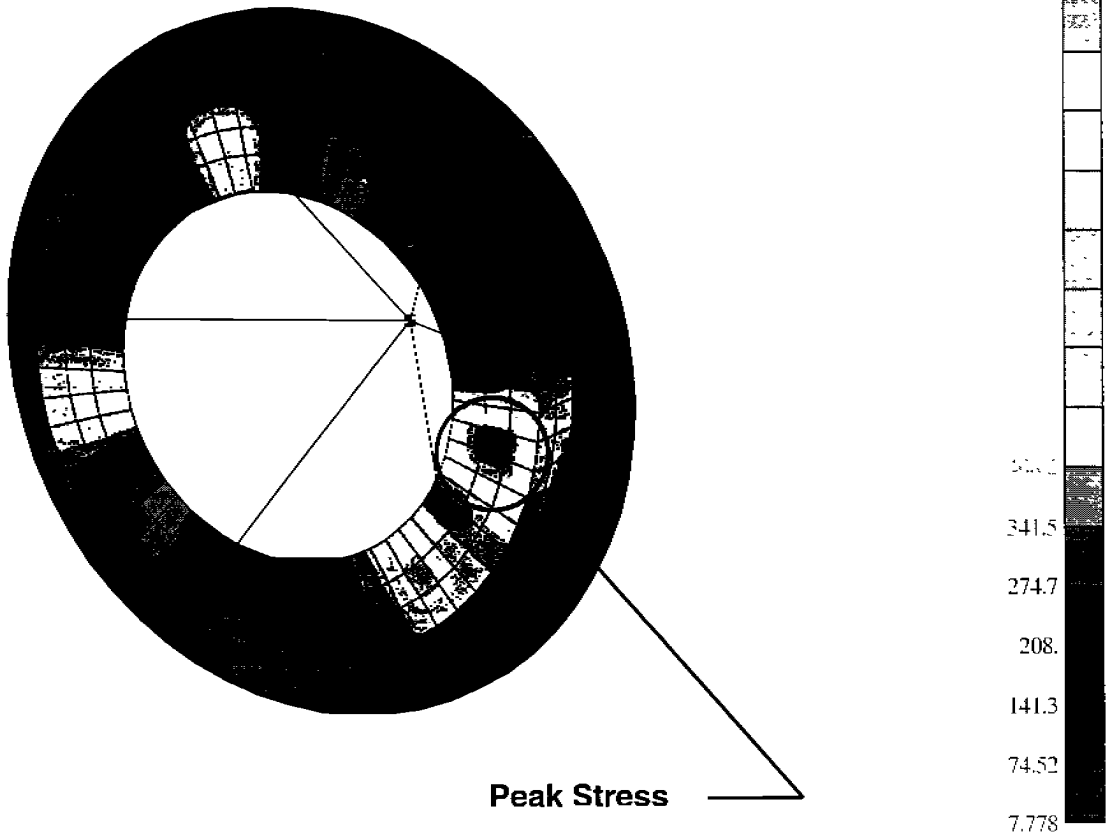

Output Set: MSC/NASTRAN Case 5
Contour: Plate Top VonMises Stress, Plate Bot VonMises Stress

FEM Stress Analysis Results (2)

SWALES AEROSPACE

CODE 552 CRYOGENICS & FLUIDS

Ring Flexure
Load Case: Random Vibration (Z-axis)

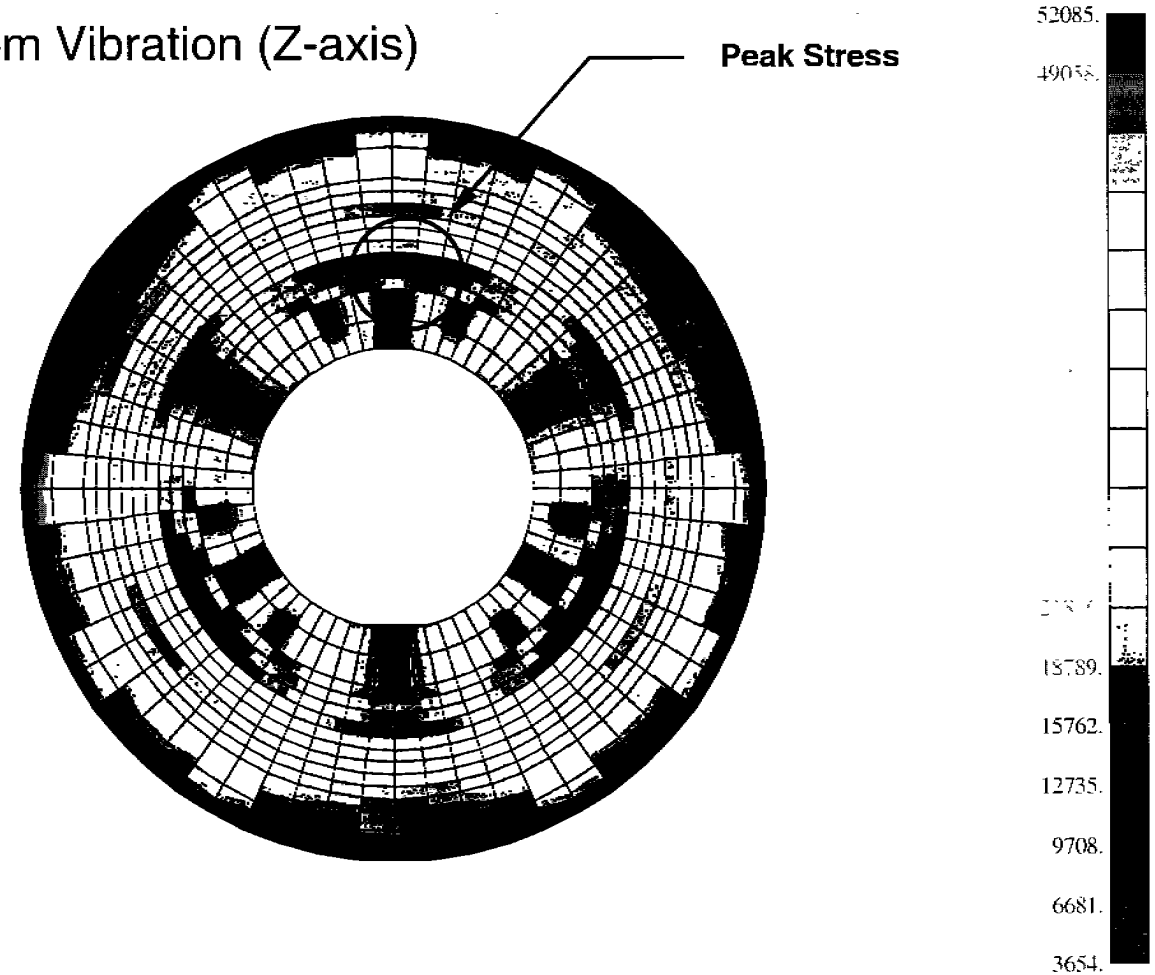

Output Set: MSC/NASTRAN Case 19
Contour Plate Top VonMises Stress, Plate Bot VonMises Stress

FEM Stress Analysis Results (3)

Support Housing
Load Case: Launch (3.6/3.6/14.4)

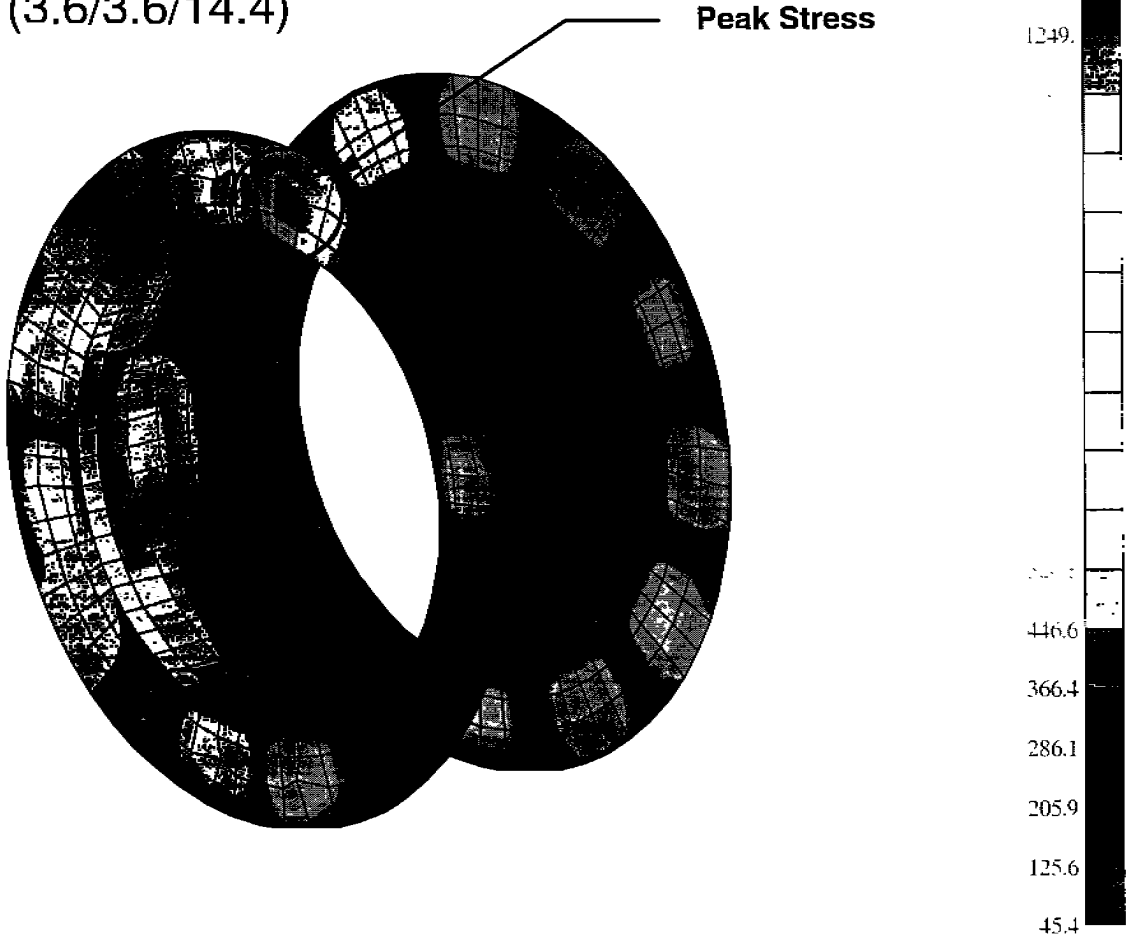

Output Set: MSC/NASTRAN Case 14
Contour: Plate Top VonMises Stress, Plate Bot VonMises Stress

FEM Stress Analysis Results (4)

Flexure Brackets
Load Case: Launch (3.6/14.4/3.6)

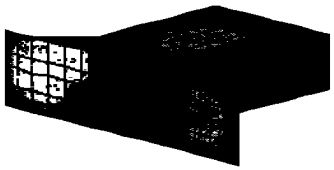

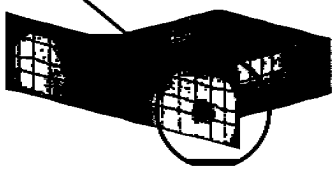

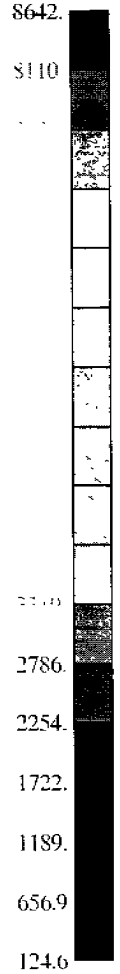

Output Set: MSC/NASTRAN Case 9
Contour: Plate Top VonMises Stress, Plate Bot VonMises Stress

FEM Stress Analysis Results (5)

Support Brackets
Load Case: Random Vibration (Y-axis)

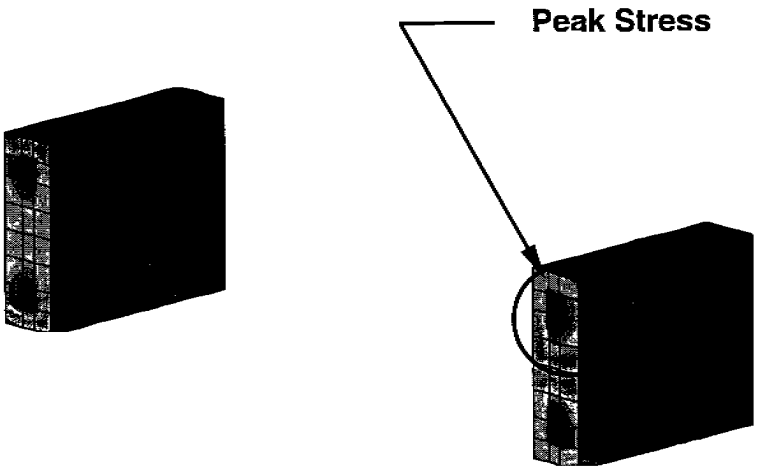

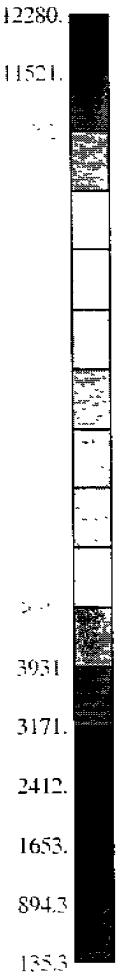

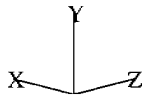

Output Set: MSC/NASTRAN Case 18
Contour: Plate Top VonMises Stress, Plate Bot VonMises Stress

FEM Stress Analysis Results (6)

SWALES AEROSPACE

NASA GSFC CODE 552 CRYOGENICS & FLUIDS

Boot Assembly
Load Case: Random Vibration (Y-axis)

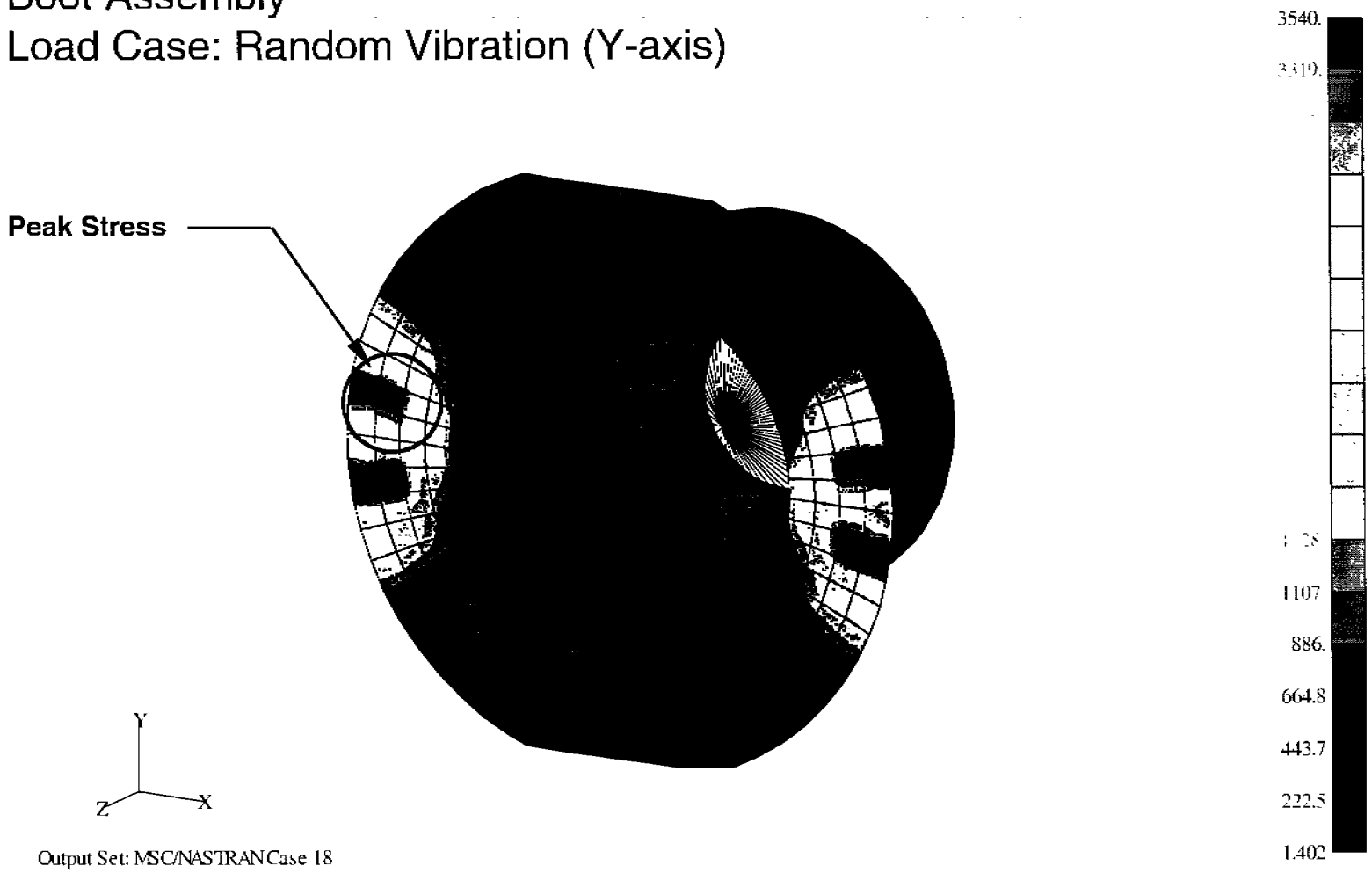

Output Set: MSC/NASTRAN Case 18
Contour: Plate Top VonMises Stress, Plate Bot VonMises Stress

FEM Stress Analysis Results (7)

Blade Flexure

Load Case: Random Vibration (Z-axis)

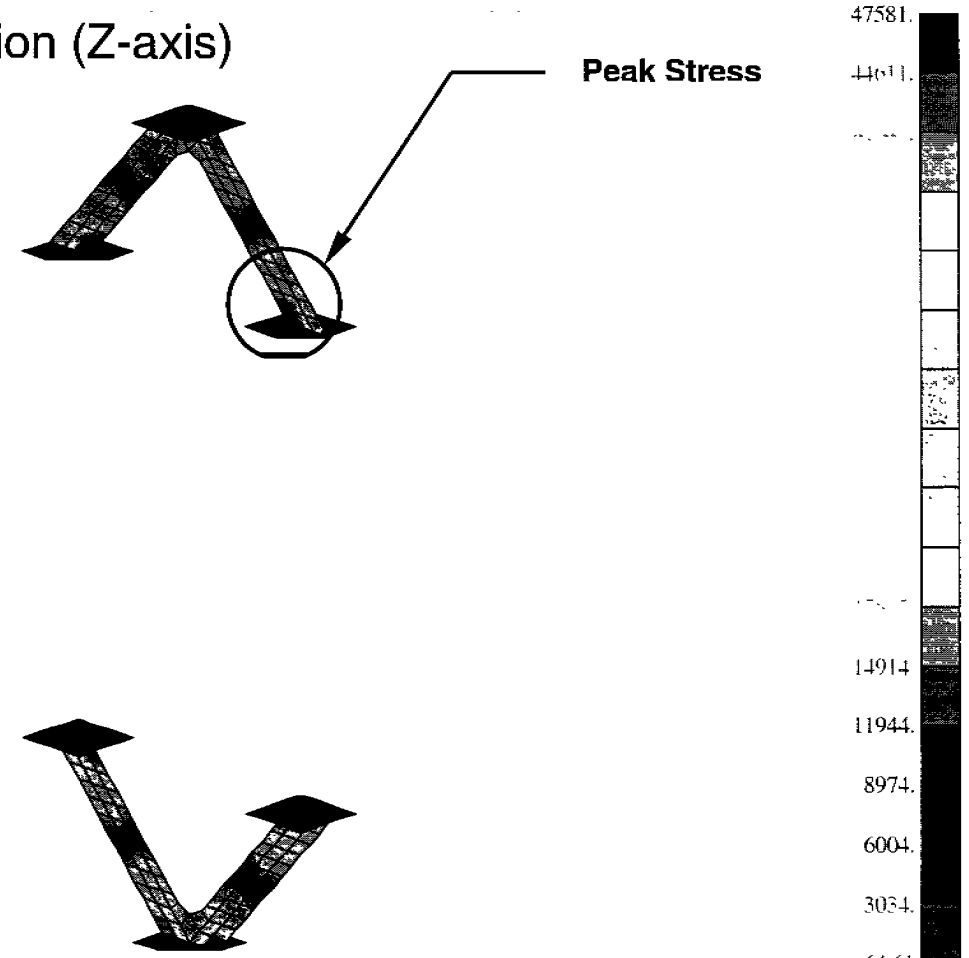

Output Set: MSC/NASTRAN Case 19
Contour: Plate Top VonMises Stress, Plate Bot VonMises Stress