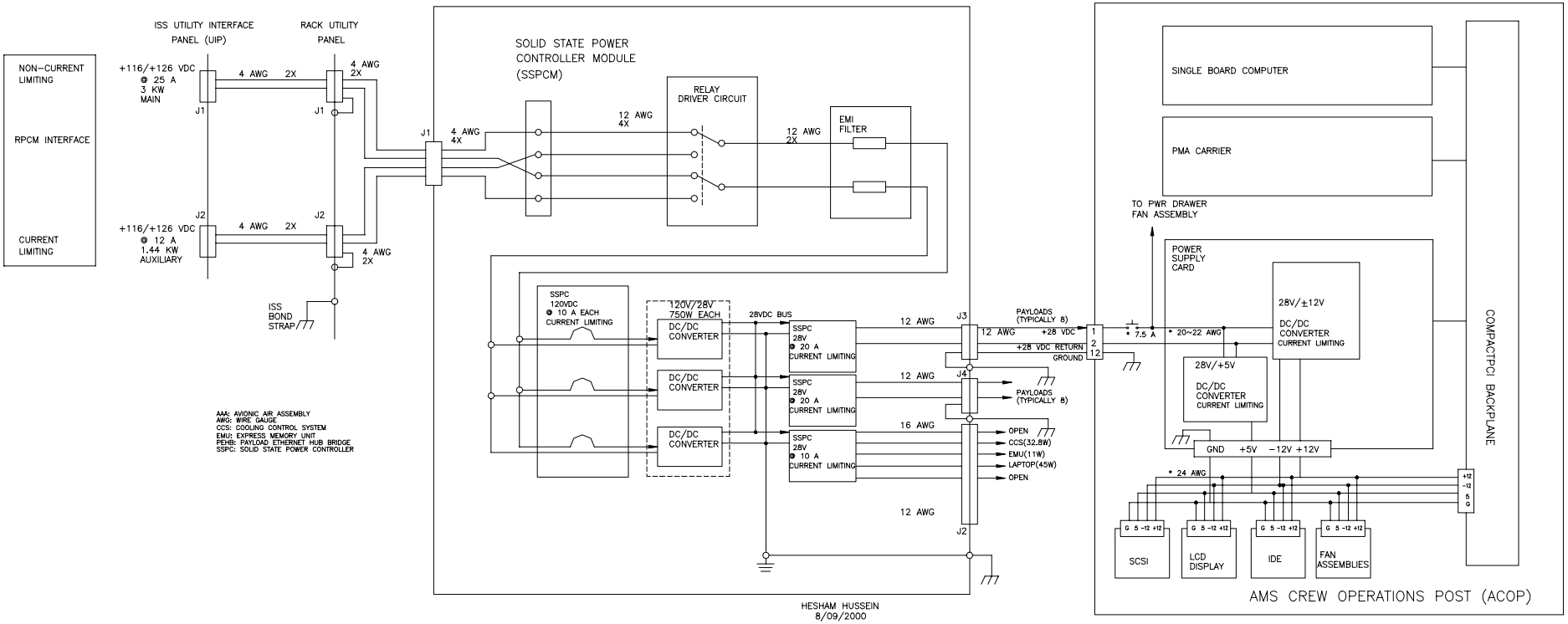

* WIRE SIZE SELECTION IS BASED ON 200° C.
POWER ASSUMPTION IS BASED ON 200 W (POWER IS NOT YET DEFINED)