Appendix E

AMS-02 EP-5 Battery Design Evaluation Form

Section 1 to be completed by EP/Division Secretary:	
1a. EP Tracking Number: EP-06-19	**1b. Assigned EP5 Reviewer:** J. Jeevarajan / X34528
Section 2 to be completed by the Hardware Point-of-Contact:	
2a. Hardware Point-of-Contact: (Name/Phone/Company/Mail Code) John Heilig / 281-461-5724 / ESCG (Jacobs Technology)	**2b. Hardware Name:** Alpha Magnetic Spectrometer-02, Uninterruptible Power Supply **Hardware Part Number:** UPS-BB **Hardware Acronym:** AMS-02, UPS
2c. Hardware Managing Group, Company, or Agency: AMS-02 Project Management Office, JSC EA-2 and ESCG	

2d. Hardware Flight Information (i.e. flight application, target flight number and/or date, number of flights anticipated, etc.):
Two UPS boxes, each containing an eight-cell battery, will be integrated with the rest of the AMS-02 payload. The payload is scheduled as manifested flight STS-134. The mission is planned to launch on one Shuttle flight to ISS, where the payload will be transferred via SRMS and SSRMS to the ISS S3 Truss upper inboard payload attach site (PAS). The two UPS boxes will have an operational life that supports the first three years of payload operation, as described below. The payload will continue to operate, without support from the UPS boxes, following the initial three years. Currently, there are no provisions to remove the AMS-02 payload and return it, nor are there any planned jettison operations. Thus, the AMS-02 payload will remain at the ISS S3 Upper inboard PAS for the remainder of the ISS mission life.

2e. Hardware environmental Requirements:

Thermal (max, min, operational and non-operational ranges):

- **Storage:** To minimize aging effects on the battery, the battery should be stored at a 50% SOC within a 0 to 10 °C temperature range.
- **Operating (and Acceptance Testing):** –25 °C to +50 °C
- **Qualification Testing:**
  - **Cell Level:** –25°C to 40°C
  - **UPS Battery Level:** –30ºC to 55ºC
- **Non-operating:** Non-operational temperature requirements were not levied upon the manufacturer at the time of project specification. However; the worst case thermal environment for the AMS-02 UPS has been assessed by integrated analyses to be -50 °C to 50 °C (non-operational minimum and operational maximum). Manufacturer battery design and history data has indicated cell survival at temperatures as low as –65 °C and safe operation at 120 °C.

Pressure (EVA, IVA): EVA: External truss mounted payload.

- **Prelaunch Pressure Environment:** The UPS shall be capable of operation when exposed to ambient pressures varying from 13.5 to 15.2 psia.
- **Ascent/Entry Pressure Environment:** The UPS shall be compatible with the pressurization and depressurization rates for Ascent and Entry as illustrated in ICD-2-19001, Shuttle Orbiter/Cargo Standard Interfaces (Section 10.6). The maximum depressurization rate on launch is 0.455 psi/sec; the maximum pressurization on entry is 0.184 psi/sec.
- **On-orbit Pressure Environment:** The UPS shall be capable of operation when exposed to on-orbit minimum pressure environment of 5.5×10^{-12} psia (2.7×10^{-10} Torr).

Life (calendar/shelf, cycle):

UPS Operational Life Requirements

The UPS battery is required to support the following profile to initiate a controlled quench of the AMS-02 cryo-magnet.

Phase 1: Storage:

For 2 years at the optimum temperature and SOC. To minimize aging effects on the battery, the battery should be stored at a 50% SOC within a 0 to 10 °C temperature range. Because the BMS draws power from the battery, a charger (CSIST provided) will be required to maintain the appropriate charge level.

Phase 2: Ground use:

For one year at room temperature. Operational profile is 100% SOC maintained with charger, with a discharge/charge cycle once per month using the following profile:

- 8-hours of 40W external load
- 1.5 hours of a 50W load
- Recharge to 100% SOC

Phase 3: On-orbit use:

For 3 years, assume 100% SOC with the attached temperature profile, and the following profile:

- Four discharge/charge cycles per year using:
  - 8-hours of 40W external load
  - 1.5 hours of a 50W load
  - recharge to 100% SOC
- And one end of mission (after 3-year on-orbit ops) discharge using:
  - 8-hours of 40W external load
  - 1.5 hours of a 50W load
  - Followed by the pulse (45Amps for 150ms, with a minimum battery voltage of 21.2V.

UPS Non-Operational Life Requirements
For this phase, the hardware survivability requirement is only that it not degrade or otherwise passively fail, creating a hazard, in its non-operational mode.
Phase 4:
On-orbit, non-operational, for the remainder of ISS mission beyond the original three years of operational life described in Phase 3. This assumes that the AMS-02 payload is neither returned nor jettisoned from the ISS.

Section 3 to be completed by Hardware Point-of-Contact:

3a. Battery Hardware Description:
The UPS box is the overall avionics box, as shown in Figure 1.
The battery consists of eight cells in series, as shown in Figure 2 (five batteries are shown, and cell interconnections are omitted in this picture). There is one such battery per UPS box.
The UPS box also contains a set of BMS electronics, which is shown in Figure 3. The BMS contains both hardware and software inhibits to control potential safety issues, which are discussed in detail in Section 3b.
There are two such UPS boxes integrated on the AMS-02 payload, as shown in Figure 4.

Are the cells/ the battery pack Commercial-off-the-shelf (COTS)?
No, the battery is based on a commercial design that is customized for the AMS-02 specifications and applications. This similar commercial design on which the battery is based has extensive NASA and military flight history.

Function/Operating mode (pulse? intermittent? clock backup? memory?):
The UPS battery is required to support the following profile to initiate a controlled quench of the AMS-02 cryo-magnet. This function is described in detail in Section 3b under circuit description.

Phase 1: Storage:
For 2 years at the optimum temperature and SOC. To minimize aging effects on the battery, the battery should be stored at a 50% SOC within a 0 to 10°C temperature range. Because the BMS draws power from the battery, a charger (CSIST provided) will be required to maintain the appropriate charge level.

Phase 2: Ground use:
For one year at room temperature. Operational profile is 100% SOC maintained with charger, with a discharge/charge cycle once per month using the following profile:
- 8-hours of 40W external load
- 1.5 hours of a 50W load
- Recharge to 100% SOC

Phase 3: On-orbit use:
For 3 years, assume 100% SOC with the attached temperature profile, and the following profile:
- Four discharge/charge cycles per year using:
  - 8-hours of 40W external load
  - 1.5 hours of a 50W load
  - recharge to 100% SOC
- And one end of mission (after 3-year on-orbit ops) discharge using:
  - 8-hours of 40W external load
  - 1.5 hours of a 50W load
  - Followed by the pulse (45Amps for 150ms, with a minimum battery voltage of 21.2V.

Battery interfaces (connectors? equipment?): The battery is connected via terminals (terminal lugs fastened with screws) at the cells through a wire harness, internal to the UPS box, to the Battery Management System (BMS) electronics, which has PCB through hole soldered terminations. The BMS electronics are connected, through another wire harness, via PCB card edge connectors to the UPS housing mounted circular connectors (qty. 2). These UPS housing mounted circular connectors provide the electrical interface to the rest of the payload.

Stowage location (installation and use locations):
Two UPS avionics boxes are mounted to the AMS-02 structure, as shown in Figure 4. Also shown is the Cryomagnet Avionics Box (CAB), which provides the current for re-charging the batteries.
The AMS-02 Payload at its installed position in the Shuttle Payload Bay is shown in Figure 5.
The AMS-02 Payload at its installed position on the ISS S3 Upper Inboard truss is shown in Figure 6.

Battery/cell access during flight: None required.

Short circuit/safe-touch temperature protection: Yes, performed by the BMS as described in Section 3b.

Packaging (battery box material, coating, terminal protection): The UPS housing is manufactured from Aluminum 7075T7351. The outer surfaces are clear anodized, as are the inner surfaces, except joining surfaces, which are chem-film alodined. Once electrical connections have been made at the battery terminals, the connections will be potted with a vacuum-rated RTV.

Wicking material: None required.

Vent design and operating characteristics (opening pressure? redundancy scheme?):
The Lithion NCP25-3 cells are constructed with the inclusion of a rupture disk that will relieve internal pressures at 200 ± 50 according to Lithion testing and certification. Testing of the cell cases without rupture disks established a burst pressure in excess of 1000 psid, for a working ratio of rupture disk to cell case burst pressure that is better than 4:1. Any products vented from the cell will vent to the interior of the UPS box, which is vented to exterior environments, via machined through lettering in one face of the UPS box (see Figure 1.) Only gaseous products are expected during a venting event.

Test data for the cells, battery, or complete hardware package:
- Qualification and acceptance test data for the cells can be referenced in Lithion test report document *L1135-05, Qualification Test Report for the Alpha Magnetic Spectrometer-02 (AMS-02) Uninterruptible Power Source (UPS) NCP25-3 Lithium-ion Cells Per LiTP-6208 Test Dates 1~05 to 2/17/05, Rev. -, Dated 3/11/2005*.
- Protoflight test data for 32 replacement cells (8 each for FM1, FM2, FS1, and FS2) and UPS avionics boxes will be provided by Yardney-Lithion Technical Products.
- Qualification and acceptance test data for the BMS electronics can be referenced in Lithion test report document *LiTP-6328, Appendix pages 1-5 for each S/N 01 through 05, dated 1/24/06*.
- Qualification and acceptance test data for the integrated UPS avionics boxes will be performed by Yardney –Lithion Technical Products

3b. Chemical and Electrical Description: ***If more than one battery is contained in the hardware, provide information for all the batteries.***

Cell Description:

Chemistry: Lithion Ion, as detailed below:
- Lander Cathode: LiNi1-xCoxO2 Active Material
- Lander Anode: Graphitized MCMB 10-28 Active Material
- Lander Electrolyte: 1M LiPF6 in 1:1:1:2 EC/DMC/DEC/EMC

Size: Prismatic, 5.5 X 1.1 X 3.75 in (Figure 7) **Manufacturer:** Yardney Lithion **Model number:** NCP25-3

Nominal open circuit voltage: 3.6 – 4.1 V **Expected load voltage:** 3.6 V **Rated capacity:** 28 Ah

Battery Description: (9 V COTS batteries shall be considered as single units)

Quantity of cells per battery: 8 **Connectivity of cells (serial? parallel?):** Series

Operating voltage range: 20.8 – 32.8V **Operating temperature range:** –25 °C and +50 °C

Average Load and duration: 2.1 A 9.5 Hr **Peak Load and duration:** 45A 150ms **Capacity Required:** 20 Ah

Circuit description and electrical schematic (attach electronically or indicate that a hard copy is provided):
The AMS-02 payload has a superconducting toroidal magnet that deflects high energy cosmic ray particles as they pass through the bore of the toroid. The AMS-02 science instruments then measure the trajectory, track and velocity of the particle.

Super-conducting magnets, such as the one utilized by AMS-02, may develop a condition where a portion of the coil begins to rise above super-conducting temperatures. When this condition occurs, the section of wire affected begins to

develop resistance, and the current running through this resistance begins to heat the wire rapidly. This rapidly leads to dissipation of the magnet energy (in the form of heat) within the magnet, and is referred to as a magnet quench. This condition is highly undesirable from a mission success standpoint because resulting unbalanced magnetic forces in the different sections of the magnet may cause it to deform, making it unable to be recharged to the maximum field or even to return to a superconducting state, thus preventing the recharging of the magnet. This is a possible mission success critical failure, **not a safety issue**. Alterations in the magnetic field have already been accounted for in the safety assessment for nominal field strengths.

To protect the magnet from this condition, referred to as an unassisted quench, electronics have been designed that will detect the initiating condition and apply heat quench evenly throughout the magnet coils, causing the magnetic field to dissipate uniformly. This will prevent the heating from being isolated to a small section of the magnet, which could become damaged if the quench was uncontrolled. By performing an assisted quench, mission success criteria can be maintained.

The CSP contains quench detection electronics that monitor the status of the magnet coils to determine if a quench condition is starting to occur. To perform this function, redundant voltage measurements are taken across each coil. If a quench condition is imminent, a voltage will develop across the affected coil. When the CSP detects a change in voltage, the quench protection electronics issues a command to the Uninterruptible Power Source (UPS) to provide a pulse of at least 45A to quench heaters located throughout the magnet. The pulse, for a duration of 150 ms, is required to raise the entire magnet up to a non-superconducting state. This spreads the quench throughout the magnet and prevents isolated heating that could result in degraded performance.

The quench heater chains are redundant and supplied by two separate UPS systems, thus two UPS avionics boxes. The chains are routed to alternate coils throughout the magnet. Both heater chains are nominally used by the CSP to control a quench, however either chain independently is sufficient to protect the magnet coils from deformation.
It is important to note that the CSP system is required only for mission success. **Failure of the CSP does not constitute a safety hazard**. The magnet is designed to withstand the forces that would be generated by an unassisted quench.

The CSP provides additional functions to protect the magnet during off-nominal conditions. A “watch dog” timer, powered by the UPS, is continuously counting down. Periodically the timeout is reset via external command to about 8 hours. In the event of a power loss, or the loss of communication to the AMS-02 payload, the timeout is not reset and if power or communications are not restored to the AMS within the eight-hour period, the timer will trigger the CSP Control Electronics to initiate the nominal ramp down function, discharging the magnet. During the eight hour period and the ramp down, the UPS will continue to power the Quench Detection Electronics, and maintain the capability to perform an assisted quench (if necessary) until the magnet is completely discharged.

The AMS-02 CSP “circuit” schematic, of which the UPS is an integral part, is shown in Figure 11.

As described earlier, each UPS contains a battery and a set of battery Management System (BMS) electronics, as shown in Figure 12.

<u>BMS Overview:</u>
The battery protection electronics is a radiation tolerant Battery Management System (BMS) designed for space applications. It serves to monitor and maintain a series string of eight Li-ion battery cells, with a nominal output voltage of 32VDC. The series string (referred to as the cell stack) is monitored for unhealthy temperature and/or electrical conditions, upon which the system reacts to protect the cells. It is available with the following basic features, with detail summarized in Table 1:

<u>Automatic Cell Balancing:</u>
Maintaining balance among the states-of-charge of series cells is critical to long cycle-life and pack capacity. The BMS promotes balance among the cells by resistive bypass circuitry designed to divert charge current around cells with an advanced state-of-charge. Any cell attaining a voltage higher than the equalization set-point level of 4.10VDC activates this bypass circuitry. The bypass remains active until the cell voltage in reduced to 4.05VDC, ensuring that no cell remains in an advanced state of charge.

<u>Thermal Monitoring:</u>
Electronics for the direct support of two temperature sensors is provided for monitoring the temperature of the battery cells. These sensors are Elmwood 3200 series thermostats, specified to close at a temperature of 60°C and open again at a temperature of 55°C. These sensors will be mounted in thermal contact with the sides of the battery cells. Regardless of whether the fault occurs during charge or discharge, an over-temperature condition opens a high current battery protection switch, disengaging the positive connection of the cell stack from the battery module

output.

Over-discharge Monitoring:
To prevent over-discharge, the cell stack is disengaged from the output by opening the solid-state switch when the stack voltage falls below the pack low voltage fault setting of 18VDC.

Short Circuit Protection:
In the event of a high output current condition, the battery module output is disengaged from the cell stack by opening the solid-state Protection Switch. Following this, the BMS will then reestablish the connection about every one and a half seconds. If the short circuit condition persists, this will again trigger the fault. Otherwise, normal operation will resume. To permit brief loading conditions, two time delay levels are implemented for the over-current protection activation. A current between 7A and 80A is permitted for approximately 800ms. Over-current greater than 80A is interrupted within 200µs maximum. During an attempt to reestablish the connection after an over-current fault, the 7A and 80A trip delay is reduced to approximately 200ms.

Cell Over-voltage Monitoring:
Each cell in the stack is individually monitored for an over-voltage condition. An over-voltage condition will deactivate the "charger enable" signal emanating from the BMS. The system charger must immediately halt charging if the charger enable signal is deactivated. This condition does not open the solid-state switch, however, so the battery may be discharged to recover. The over-voltage activation threshold is 4.32VDC, and its deactivation threshold is 4.26VDC.

Battery Management System Component Description:
The proposed battery management system (BMS) assembly is comprised of three main circuit boards. The first board is referred to as the Master Control Board or MCB. The other two boards are identical and are referred to as the Monitor/Equalizer boards or MEQs. A block diagram of the system is provided in Figure 12.

Master Control Board (MCB):
The Master Control Board (Figure 13) contains signal conditioning and control circuitry to monitor pack voltage, pack current and the pack temperature. This board interfaces with the two Monitor/Equalizer boards and two thermal switch temperature sensors.

The MCB provides an electrically-isolated Charger Enable feedback contact, called the WARN_OUT signal, to command the charging system. This contact is closed to allow charging and open to halt it. This contact opens under any of the following conditions, with the limits given in Table 1:

- Any cell voltage exceeds the over-voltage limit
- Temperature on either or both thermal switches exceeds its trigger temperature. These switches are normally open and close in response to high temperature.

The MCB also contains the solid-state relay (SSR) circuit, referred to as the Protection Switch, that engages the battery output to the positive of the cell stack. The SSR is designed to open, thereby interrupting battery output current, under any of the following conditions, with limits given in Table 1:

- Total battery stack voltage drops below a Over-discharge Protection set-point
- Battery thermal switches trigger
- Battery output current exceeds a predetermined limit

The MCB output current fault control logic is designed for three levels of output. These are a continuous mode, with the lowest output current range, a delayed shutdown mode, with an intermediate current range, and finally a high-current shutdown, for output current above that. The delayed shutdown mode is offered to support momentary loads that exceed the desired continuous output allowance. The output current ranges for these modes are listed in Table 2. The over-current protection is self-recovering. The Protection Switch reconnects approximately one and a half seconds after opening the switch.

The MCB also provides a Pack Voltage Feedback signal. This signal is tied directly to the stack positive, through a 10kΩ resistor for current limit protection. The board also makes each cell positive node along the cell stack available through the Cell Voltage Feedback lines (CVFB1- CVFB8). Each of these also has an inline 10kΩresistor for current limit protection. Note that since these are taps within the cell stack, the voltages present are the accumulated sum from the cell one negative (stack negative). With the -SNC1NEG option present, all of these signals are relative to cell one negative.

The MCB supports a separate path for charging current. This current is run through a diode referred to as the Blocking Diode to prevent battery short circuit through its charge path. The Blocking Diode is comprised of a parallel

combination of two parallel industrial diode components, the International Rectifier 43CTQ100. This parallel configuration is used to promote reliability.

Monitor/Equalizer Boards (MEQs):
The MEQs (Figure 14) provide cell equalization and warn if any individual cell exceeds a predetermined maximum voltage set-point as described in Table 1. Each board monitors 4 battery cells.

If any battery cell exceeds the equalization set-point, a small amount of charge current (100mA) is bypassed to a power resistor on the MEQ board. The dissipated energy slows down the charge rate of the cell and allows other cells with a lower state-of-charge to "catch-up". The cell voltage sensing circuitry also warns if any cell rises above maximum cell voltage setting. Should this occur, a solid-state relay is activated on the MEQ that provides an open collector signal to the MCB. This is referred to as over-voltage detection.

Since the balancing and over-voltage functions of the MEQs are only relevant when the cell voltages are near the full-charge level, the MEQ electronics are designed to power down when the cell voltages are below a predetermined value as described in Table 1.

BMS Board Specifications:

Specifications of the individual circuit boards and total BMS are provided in Table 1.

Circuit protection (i.e. fuses, diodes, MOSFETs, resistors, source isolation, etc.):
Both the BMS and the CSP utilize MOSFETs. Further protection is provided as follows.

Figure 15 shows the protection circuitry for the CAB Battery Charger Electronics (BCE) providing isolation between the UPS and PDS.

The BCE design includes the following protection electronics:

- Two double diodes in a cross-strapping configuration of the nominal and redundant 28Vdc primary power busses coming from PDS unit.
- SSPC (Solid State Power Conditioner), implemented by means of a Latching Current Limiter (LCL), which opens in case of failure.
- The HV power transformer barrier, which provides galvanic isolation between the electronics on primary side and the electronics on secondary side.
- The control electronics to provide the fit current to the battery, and also includes a power transformer with galvanic isolation.
- The blocking diode included in the Battery Management System (BMS) electronics, which only permits the current way in only one direction.

All the above-mentioned protections included in the CAB BCE guarantee no propagation of failure to the ISS or any other unit, such as the PDS, which provides the 28Vdc primary power busses.

On the other hand, the CSP electronics design includes the following protection electronics between UPS and the loads (quench heaters, magnet valves):

- Two switches in series to power the quench heaters. These switches are only closed during 150ms of time required for the quenching sequence.
- SSPC (Solid State Power Conditioner), implemented by means of an LCL, which opens in case of failure.
- The power transformer barrier, which provides galvanic isolation between the electronics on secondary side and the electronics on the load side.
- Two switches in series to open or close the valves.

3c. Is the battery to be charged on-orbit? Yes ☒ No ☐ ***If yes, describe charging scenario, hardware, and protective device. Attach charger schematics.***
The voltage of each cell is monitored. If the OCV of a cell falls below 3.6 V, a charge enable signal tells the CAB CSP charge circuitry to provide charge current, and the BMS charge switch is closed. Since the cells are individually monitored, a cell may be bypassed once its OCV has reached 4.1V and while the other cells are charging. See preceding sections. Top level charger circuit schematic is shown in Figure 16, and detailed schematics are attached.

3d. Summarize the pre-flight processing plan for the hardware. (See Section 4.2 of EA-CWI-033 for an overview of the processes to be considered for battery pre-flight processing.) If the preflight processing plan is documented elsewhere, indicate where it is documented and provide a copy of the documentation.

The cells/batteries and BMS electronics are designed, manufactured, integrated into the UPS box and qualification and acceptance tested (independently at the cell and electronics level) at Yardney Lithion (or subcontractor) in Connecticut.. The UPS boxes then undergo qualification and acceptance testing, at the integrated battery and electronics level.

Storage for 2-years at the optimum temperature and SOC. To minimize aging effects on the battery, the battery should be stored at a 50% SOC within a 0 to 10 °C temperature range. Because the BMS draws power from the battery, a charger (CSIST provided) will be required to maintain the appropriate charge level.

3e. Summarize the on-orbit processes and operational constraints for the hardware. (See Section 4.3 of EA-CWI-033 for an overview of the processes to be considered for on-orbit battery usage.) If the on-orbit processes and operational constraints are documented elsewhere, indicate where they are documented and provide a copy of the documentation.

The AMS-02 UPS boxes, containing the batteries, and integrated on the AMS-02 external payload. There is no crew interface for monitoring, re-charging, replacing or otherwise processing the batteries.

On-orbit use, 3- years, assume 100% SOC with the attached temperature profile, and the following profile:

- Four discharge/charge cycles per year using:
  - 8-hours of 40W external load
  - 1.5 hours of a 50W load
  - recharge to 100% SOC
- And one end of mission (after 3-year on-orbit ops) discharge using:
  - 8-hours of 40W external load
  - 1.5 hours of a 50W load
  - followed by the pulse (45Amps for 150ms, with a minimum battery voltage of 21.2V

Following the operational life, the hardware will remain, inactive, on the AMS-02 payload, which may continue to acquire scientific data without the UPS. This will continue for the remainder of ISS mission beyond the original three years of operational life described above, as the AMS-02 payload is neither returned nor jettisoned from the ISS. This only mission portion has only a survivability requirement in that it not degrade or otherwise passively fail, creating a hazard.

3f. Summarize the post-flight processing plan for the hardware. (See Section 4.4 of EA-CWI-033 for an overview of the steps to be completed as part of post-flight processing.) If the post-flight processing plan is documented elsewhere, indicate where it is documented and provide a copy of the documentation.

Not Applicable:
As described above, the AMS-02 payload is intended to re-enter with the ISS at the ISS end of mission. It has no planned mission that would return for post-flight processing.

Section 4 to be completed by EP5 Reviewer:

4. Evaluation Assessment:

4a. Does the design address:

Two-fault tolerance to catastrophic failure?	**Yes** ☐	**No** ☐	**N/A** ☐
Cell/battery gas generation mitigation or containment?	**Yes** ☐	**No** ☐	**N/A** ☐
Cell/battery electrolyte leakage mitigation or containment?	**Yes** ☐	**No** ☐	**N/A** ☐
Electrolyte toxicity memo obtained?	**Yes** ☐	**No** ☐	**N/A** ☐
Cell/battery electrical circuit protection?	**Yes** ☐	**No** ☐	**N/A** ☐
Cell/battery high temperature protection?	**Yes** ☐	**No** ☐	**N/A** ☐
Cell/battery materials compatibility and offgassing?	**Yes** ☐	**No** ☐	**N/A** ☐
Materials certification memo obtained?	**Yes** ☐	**No** ☐	**N/A** ☐

Are the battery requirements and hazard controls adequately addressed per JSC-20793 guidelines?
Yes ☐ **No** ☐ **Date of review:**
If no, describe additional hazard controls required for adequate control. If N/A, provide rationale.

4b. Is the cell screening or battery pack screening adequate per JSC-20793 guidelines?
Yes ☐ **No** ☐ **Date of review:**

If no, describe additional screening required for cells or packs.

4c. Does the pre-flight processing plan address: N/A ☐

Flight cell/battery pack qualification/certification testing?	Yes ☐	No ☐
Flight cell/ battery pack verification acceptance testing?	Yes ☐	No ☐
Installation of fresh, flight-acceptance tested cells/battery packs?	Yes ☐	No ☐
Maintaining storage conditions?	Yes ☐	No ☐

Is the pre-flight processing plan adequate per JSC-20793 guidelines and per Section 4.2 of EA-CWI-033?
Yes ☐ No ☐ Date of review:
If no, describe additional items to be added to the pre-flight processing plan.

4d. Do the on-orbit processing plan and operational constraints address: N/A ☐

Crew procedures to inspect and checkout hardware prior to usage?	Yes ☐	No ☐
Crew procedures for removing, discarding, and replacing non-rechargeable, depleted cells or batteries?	Yes ☐	No ☐
Crew procedure for removing, recharging, and storing rechargeable cells or batteries?	Yes ☐	No ☐
Crew procedures for stowage of equipment?	Yes ☐	No ☐
Crew procedures for documentation of anomalies?	Yes ☐	No ☐

Are the plans for on-orbit processing and operational constraints adequate per Section 4.3 of EA-CWI-033?
Yes ☐ No ☐ Date of review:
If no, describe additional items to be added to the on-orbit processing plan and operational constraints.

4e. Does the post-flight processing plan address: N/A ☐

Post-flight performance evaluation of hardware?	Yes ☐	No ☐	
Removal of cells and battery packs?	Yes ☐	No ☐	N/A ☐
Discarding or downgrading removed cells for non-flight use?	Yes ☐	No ☐	
Inspection of battery compartment and contacts?	Yes ☐	No ☐	
Hardware storage (minus cells and battery packs)?	Yes ☐	No ☐	

Is the post-flight processing plan adequate per Section 4.4 of EA-CWI-033?
Yes ☐ No ☐ Date of review:
If no, describe additional items to be added to the post-flight processing plan.

4f. Subsequent battery review held to verify:

4.f.1 Adequate hazard controls implemented? N/A ☐ Yes ☐ **Date of review:**
Comments from additional review:

4.f.2 Cell-screening or battery pack screening plan adequate? N/A ☐ Yes ☐ **Date of review:**
Comments from additional review:

4.f.3 Pre-flight processing plan adequate? N/A ☐ Yes ☐ **Date of review:**
Comments from additional review:

4.f.4 On-orbit processing plan and operational constraints adequate? N/A ☐ Yes ☐ **Date of review:**
Comments from additional review:

4.f.4 Post-flight processing plan adequate? N/A ☐ Yes ☐ **Date of review:**
Comments from additional review:

Section 5 to be completed by EP5 Reviewer:

5a. Evaluation Results:

The results of the battery evaluation conducted for the hardware outlined in Section 2 are as follows:

☐ Battery design for use in the stated application is approved for the following purposes:
- ☐ Ground Testing ☐ Shuttle ☐ Space Station ☐ Russian Vehicles (specify)
- ☐ Other (specify)

☐ Battery design is not approved for the following reason(s):
- ☐ Evaluation request withdrawn by Hardware Point-of-Contact
- ☐ Hardware Point-of-Contact states requested modifications will not be incorporated
- ☐ Requested modifications could not be incorporated; new request for alternate hardware will be initiated by Hardware Point-of-Contact
- ☐ Other (specify)

5b. Approval of EP5 Battery Reviewer:

Judith Jeevarajan

Typed Name ***Signature*** ***Date***

Section 6 to be completed by Hardware Point-of-Contact:

6. Concurrence of Hardware Point-of-Contact:

I concur with the results of the battery evaluation conducted for the hardware outlined in Section 2.

John A. Heilig

Typed Name ***Signature*** ***Date***

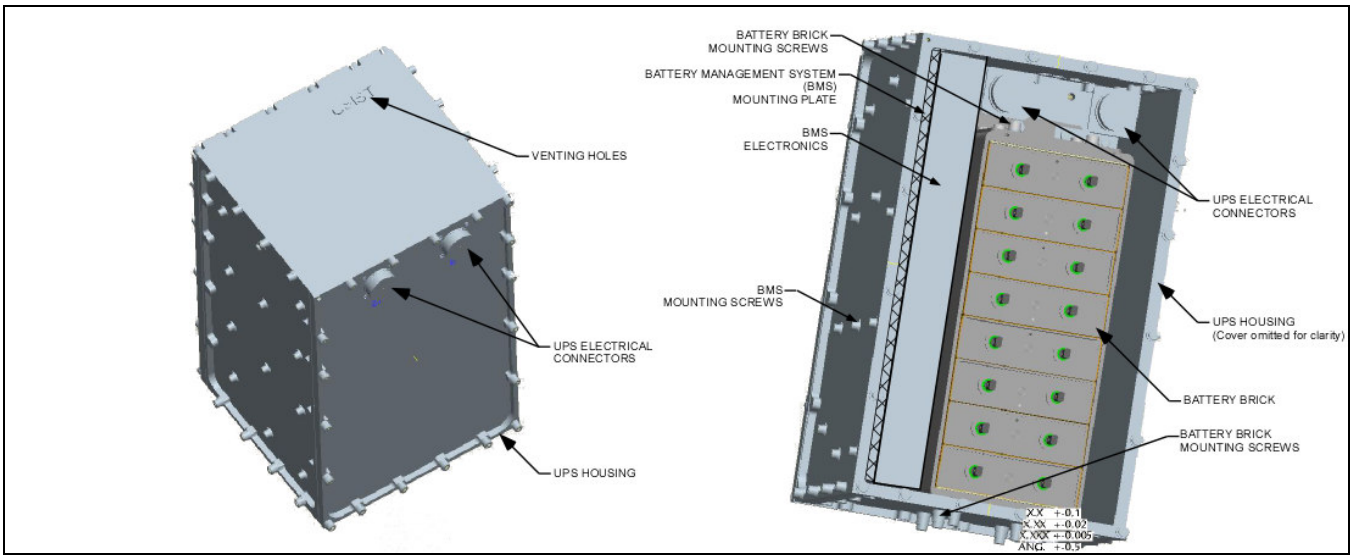

Figure 1 – UPS

Figure 2 – Battery

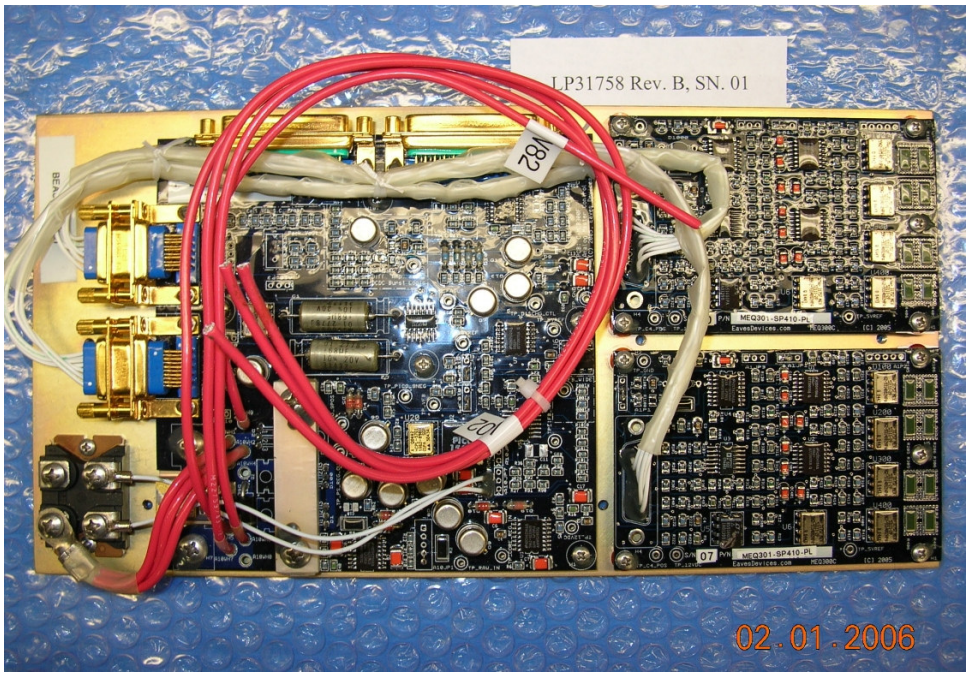

Figure 3 – Battery Management System Electronics

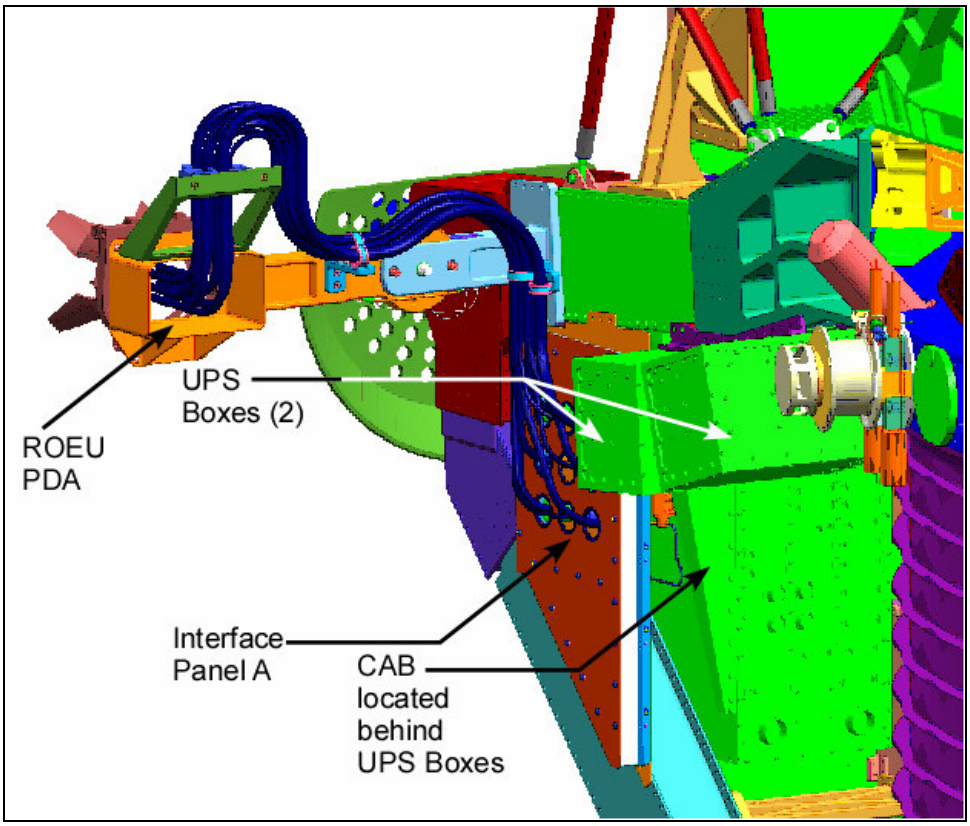

Figure 4 – UPS and CAB Locations

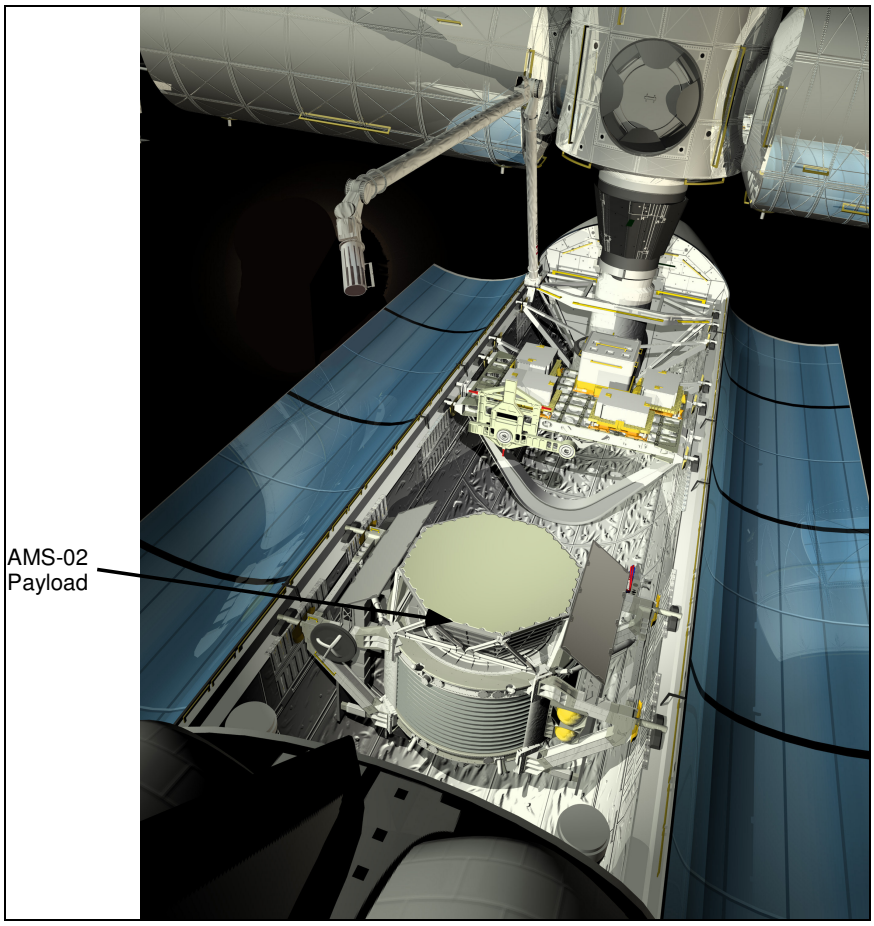

Figure 5 – AMS-02 Shuttle Location

Figure 6 – AMS-02 ISS Location

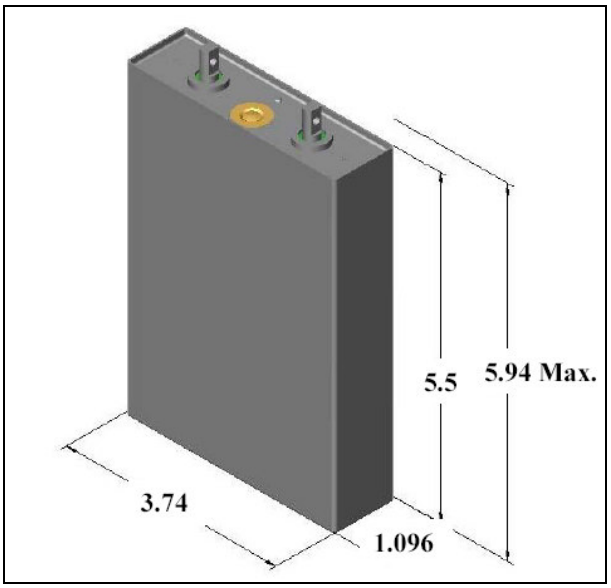

Figure 7 – NCP25-3 Cell Dimensions

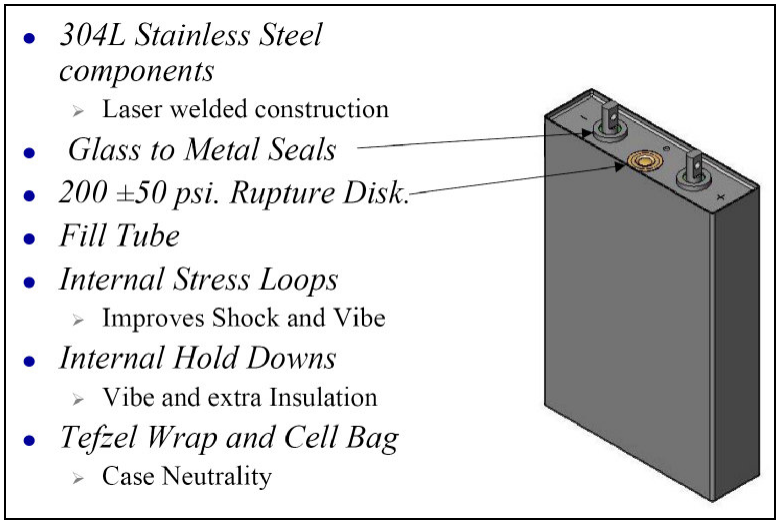

Figure 8 – NCP25-3 Cell Features

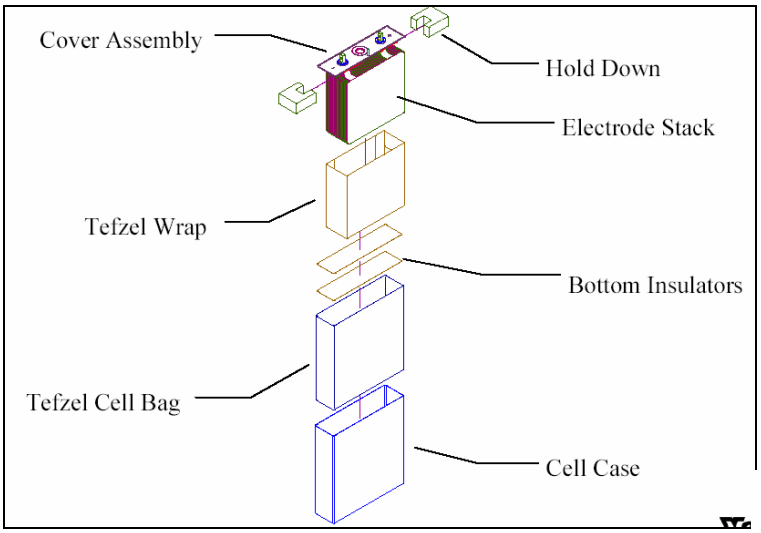

Figure 9 – NCP25-3 Internal Construction

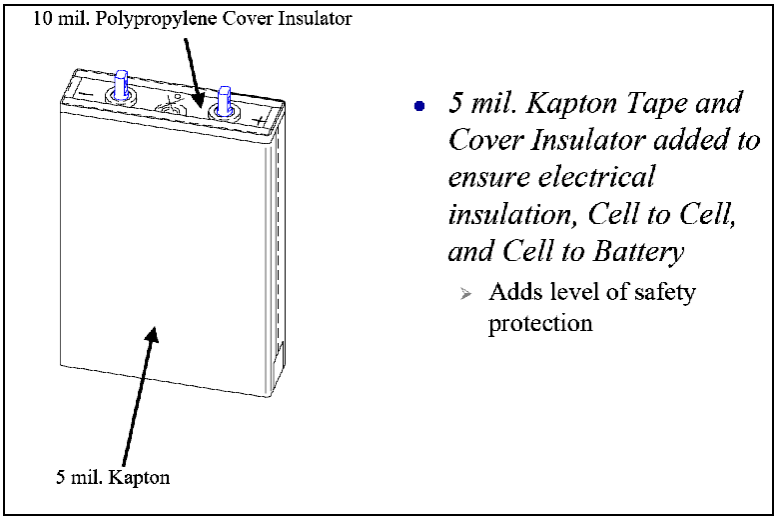

Figure 10 – NCP25-3 External Construction

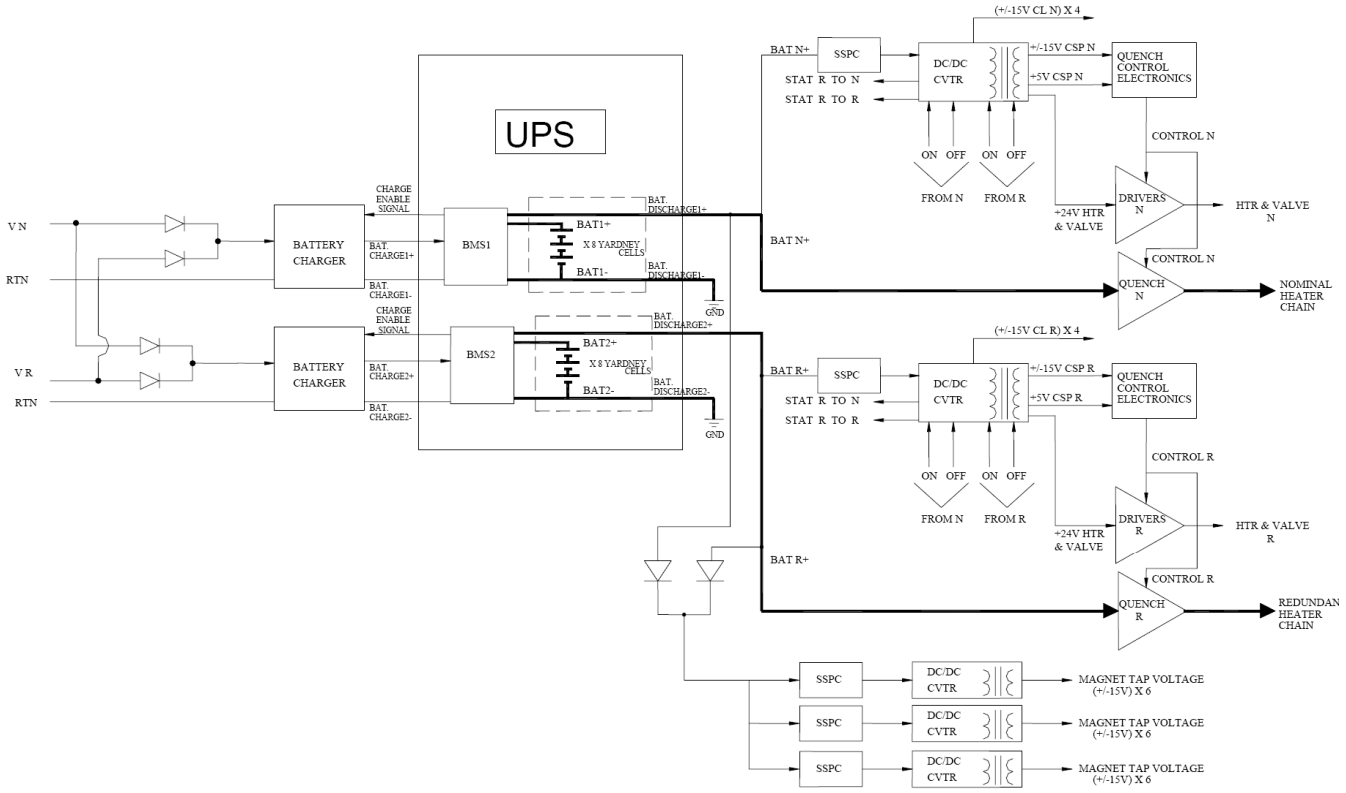

Figure 11 – AMS-02 UPS Circuit Schematic

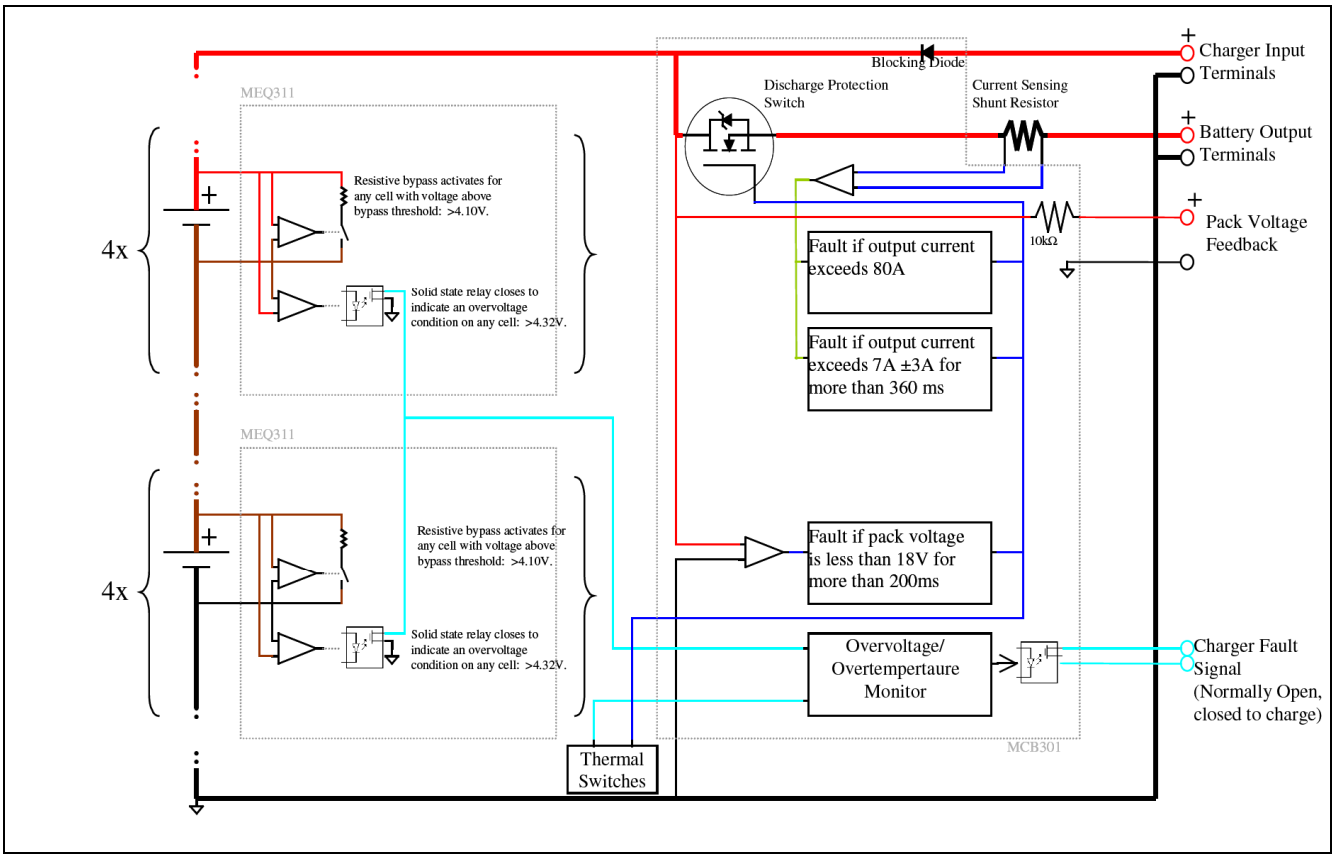

Figure 12 – Battery and Battery Management System Schematic

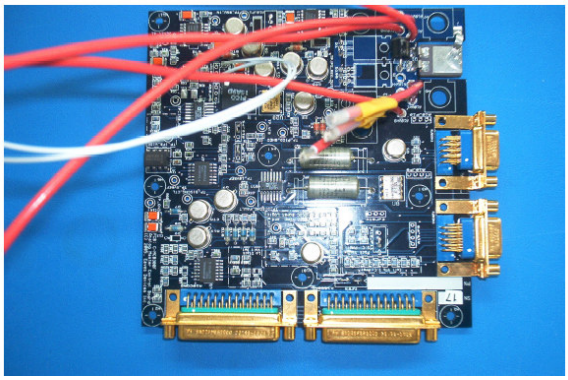

Figure 13 – Master Control Board

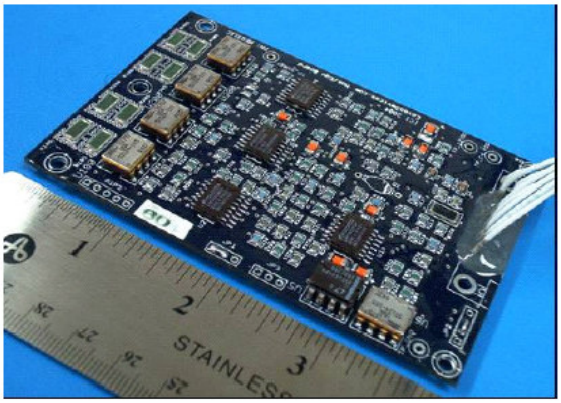

Figure 14 – Monitor / Equalizer Board

Parameter	*Value*
Monitor/Equalizer Board	
Equalizer Circuit On Volt.	4.10 VDC
Equalizer Circuit Off	4.05 VDC
Equalization Current	100mA ± 1% @ 4.1V/cell
Equalization Setpoint Accuracy	±1% @ 25°C
Cell Over Voltage Fault On	4.32 VDC ± 1%
Cell Over Voltage Fault Off	4.26 VDC ± 1%
Overvolt Warning Relay Rating	45V, 100mA
MEQ Low Power Shut-down Voltage	27.06 VDC ± 1% nominal (13.53 VDC ± 1% for each MEQ on its four cell group)
Current Consumption	8 mA/Cell Active, 200 uA Shut-down
Base Plate Temperature Range	-20 to 45 °C
Dimensions	4" x 2.61" x 0.5" (102mm x 66.3mm x 12.7mm)
Weight per Board	50g
Master Control Board	
Pack Low Voltage Fault Level	18VDC ± 1VDC (0.2 to 1.5 second delay before fault)
Thermostat High Temperature Fault Level	60 °C
Thermostat Recovery Temperature	55 °C
Output overcurrent Shut-down time, $I_{discharge}$ <= 7A ± 3A	No shut-down
Output Overcurrent Shut-down time, 7A ± 3A < $I_{discharge}$ <= 80A	800ms typical for first instance (0.36 – 1.5 seconds) ~200ms to resume fault while self-recovering
Output overcurrent Shut-down time $I_{discharge}$ > 80A	Less than 100µs
Output overcurrent self-recovery time	1.5s typical
MCB Power Shut-down Voltage, Protection Switch	15 VDC ± 1VDC
MCB Power Shut-down Voltage, Core Electronics	14 VDC ± 1VDC
Maximum Charging Current	10ADC
Maximum Charger Enable Relay Current, includes MIL-STD-975M derating	1.2ADC
Maximum Charger Enable Relay Voltage, includes MIL-STD-975M derating	67.5VDC
Maximum Charger Enable Relay Power, includes MIL-STD-975M derating	400mW
Base Plate Temperature Range	-20 to 45 °C
Dimensions	5.38" x 5.62" x 0.75" (137mm x 143mm x 19.1mm)
Weight per Board	250g
Total BMS	
Power Consumption Pack Voltage = 30.4V	< 60 mA
Total Weight including mounting plate	805 g
BMS Electronics Dimensions including Mount Plate	5.75"Hx11.25"Wx1.25"D (146mmx286mmx31.8mm)
System MTBF	> 1.1 million hours

Table 1 – Battery Management System Board Specification

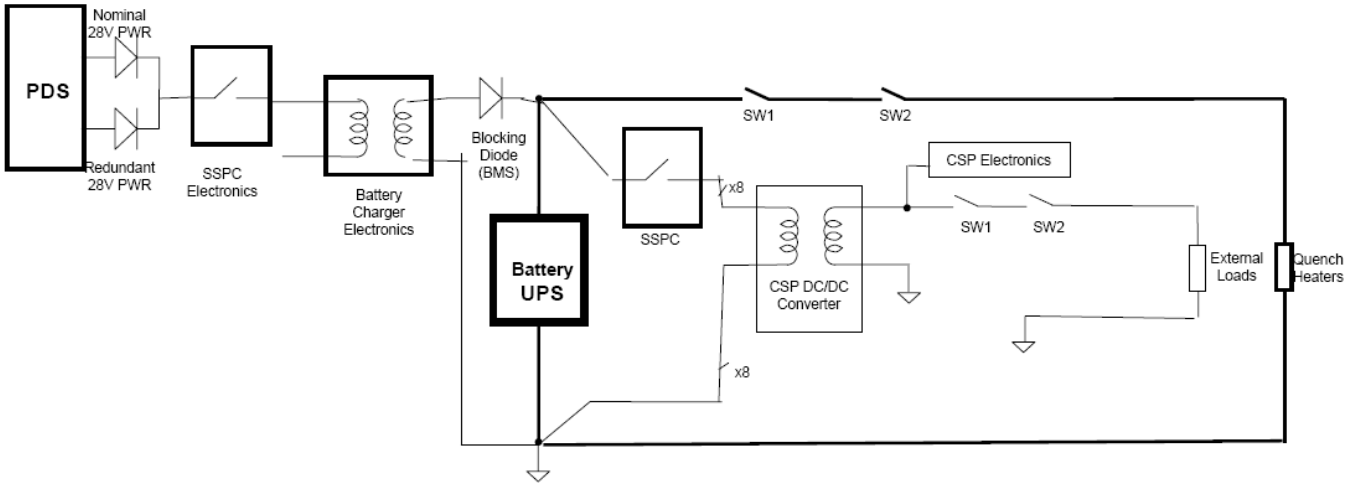

Figure 15 – PDS to UPS Interface Diagram

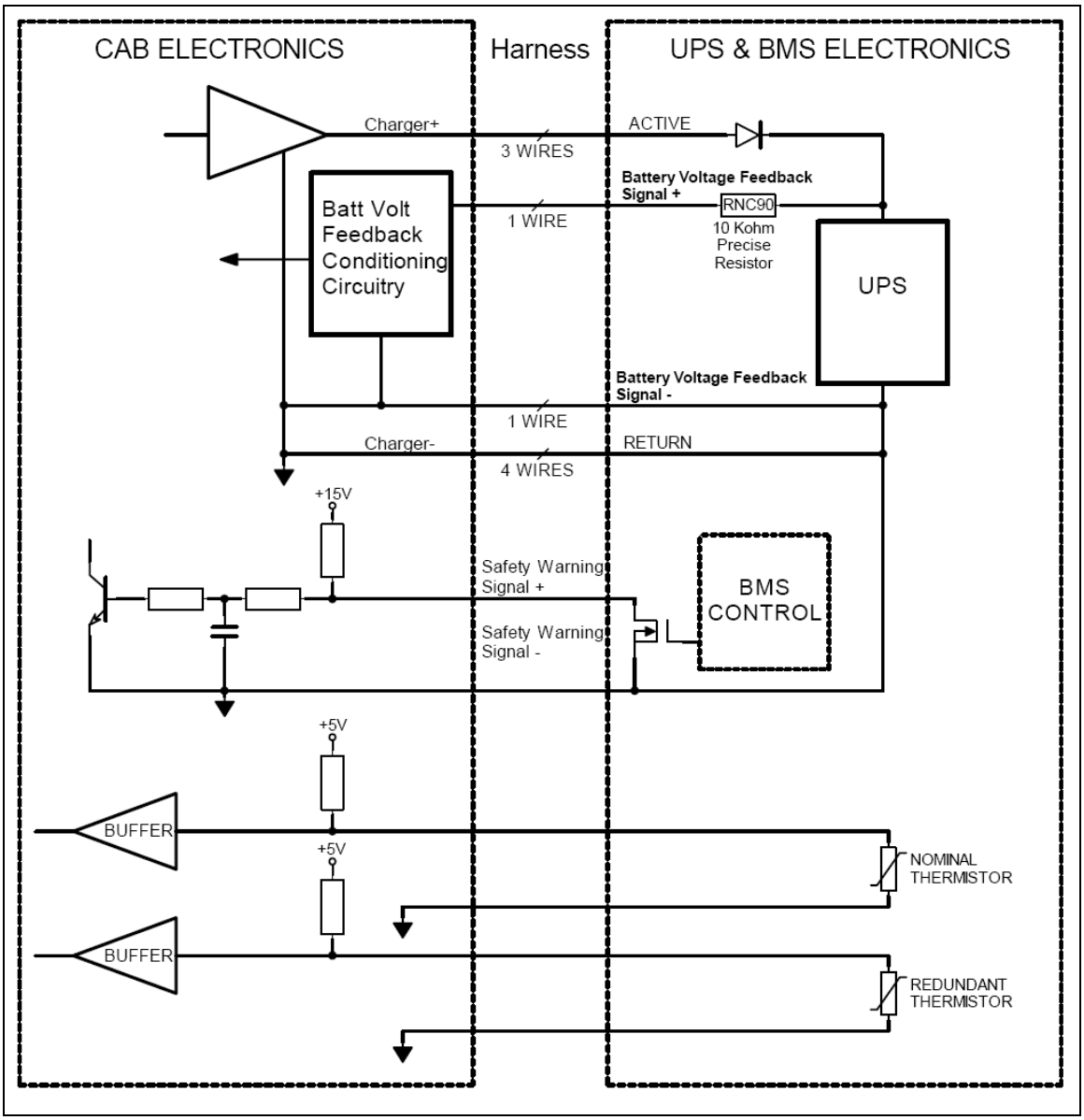

Figure 16 – Top Level CAB / UPS Charger Circuit Diagram