PAYLOAD HAZARD REPORT		a. NO: GHR-AMS02-010
b. PAYLOAD: Alpha Magnetic Spectrometer-02 (AMS-02) GSE		c. PHASE: II
d. SUBSYSTEM: GHE Static Structures	e. HAZARD GROUP: Structures	f. DATE: May 2008
g. HAZARD TITLE: Structural Failure of the AMS-02 Primary Support Stand (PSS) During Static Operations		i. HAZARD CATEGORY ☒ CATASTROPHIC ☐ CRITICAL

h. APPLICABLE SAFETY REQUIREMENTS:
KHB 1700.7C, Section: 4.5.1.6 Stands

j. DESCRIPTION OF HAZARD:

Structural failure of the Alpha Magnetic Spectrometer-02 (AMS-02) GSE while it is being used as a support/work stand could result in injury to personnel and/or damage to the AMS-02 payload or ground support equipment.

k. HAZARD CAUSES:

1. Inadequate structural design.
2. Improper assembly/adjustment of the PSS vertical corner supports.
3. Improper assembly of cryogenic and vent line support stands.

l. HAZARD CONTROLS:

(See continuation sheet)

m. SAFETY VERIFICATION METHODS:

(See continuation sheet)

n. STATUS OF VERIFICATION:

(See continuation sheet)

o. APPROVAL	PAYLOAD ORGANIZATION	SSP/ISS
PHASE I		
PHASE II	TRENT MARTIN 10/3/08	10/3/08
PHASE III		

JSC Form 542B (Rev November 22, 1999) (MS Word September 1997)

PAYLOAD HAZARD REPORT CONTINUATION SHEET	a. NO:	GHR AMS02--010
b. PAYLOAD: Alpha Magnetic Spectrometer-02 (AMS-02) GSE	c. Phase	II

k. HAZARD CAUSES:

1. Inadequate structural design.

l. HAZARD CONTROLS:

1.1 Ensure the design of all support hardware meets requirements of KHB 1700.7C.

1.2 Procedures to ensure ground support hardware will be configured correctly prior to use.

m. SAFETY VERIFICATION METHODS:

1.1.1 Stress analyses demonstrating positive margins of safety.

1.2.1 Review of procedures to verify compliance with assumptions in stress analysis.

n. STATUS OF VERIFICATION:

1.1.1 Open

1.2.1. Open

PAYLOAD HAZARD REPORT CONTINUATION SHEET	a. NO:	GHR AMS02--010
b. PAYLOAD: Alpha Magnetic Spectrometer-02 (AMS-02) GSE	c. Phase	II

k. HAZARD CAUSES:

2. Improper assembly/adjustment of the PSS vertical corner supports.

l. HAZARD CONTROLS:

2.1 The part numbers and torque values for the bolts used to adjust the vertical corner supports of the PSS will be specified in the assembly/adjustment procedure.

2.2 Vertical supports are keyed so that they can only be installed correctly.

2.3 Proper procedures for installing corner supports.

m. SAFETY VERIFICATION METHODS:

2.1.1 Review of the PSS assembly/adjustment procedure.

2.2.1 Review of design.

2.3.1 Review of procedures.

n. STATUS OF VERIFICATION:

2.1.1	Open
2.2.1	Open
2.3.1	Open

PAYLOAD HAZARD REPORT CONTINUATION SHEET	a. NO: GHR AMS02--010
b. PAYLOAD: Alpha Magnetic Spectrometer-02 (AMS-02) GSE	c. PHASE: II

k. HAZARD CAUSES:

3. Improper assembly of cryogenic and vent line support stands.

l. HAZARD CONTROLS:

3.1 Ensure that the support stand's fixation device is properly installed.

3.2 Assembly per support stand procedures.

m. SAFETY VERIFICATION METHODS:

3.1.1 Inspection of support stand assembly to ensure proper installation of fixation device.

3.2.1. Review of support stand procedures.

n. STATUS OF VERIFICATION:

3.1.1	Open
3.2.1	Open

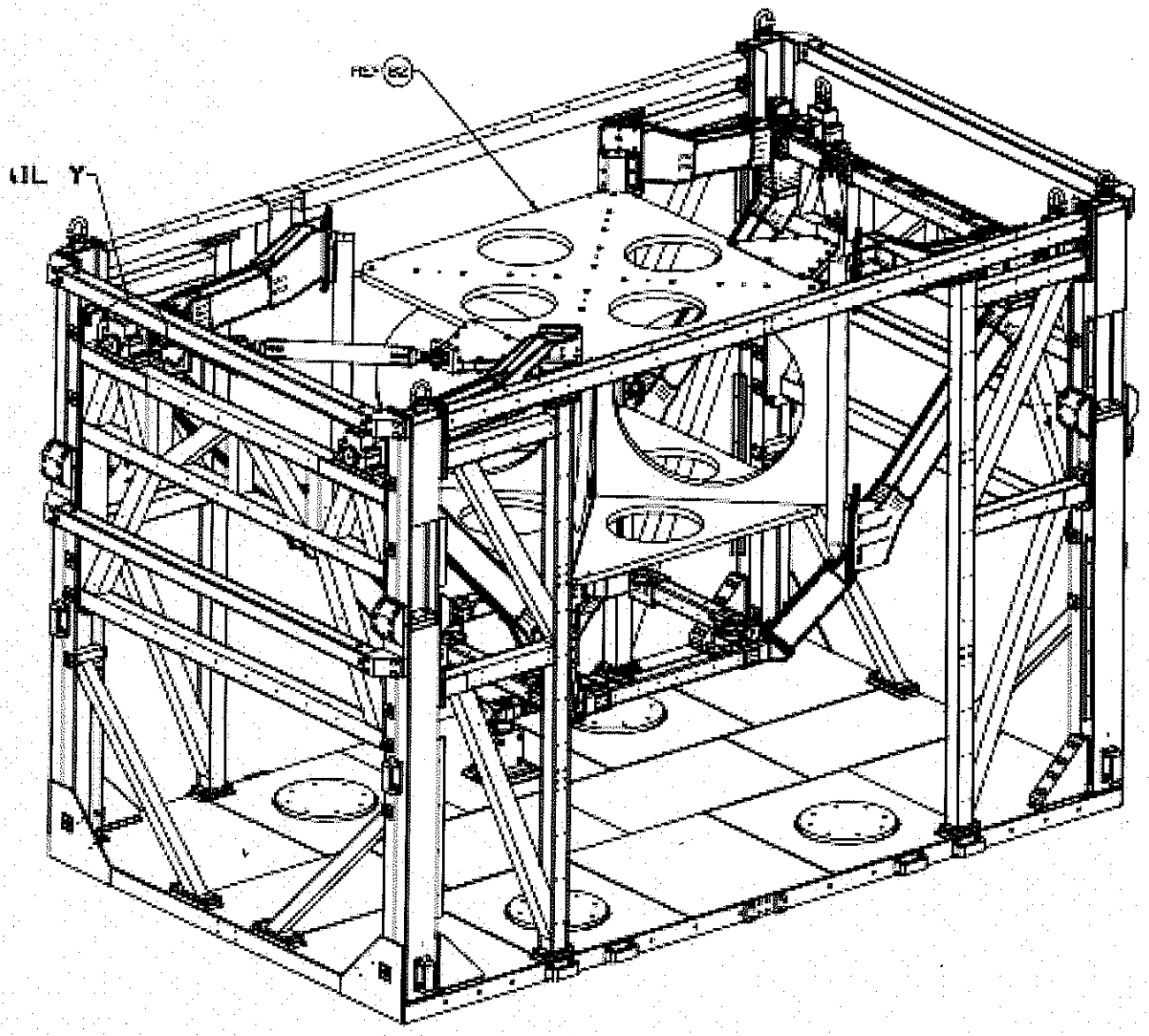

Primary Support Stand (In "High" Configuration)

GROUND SUPPORT LIFTING/HANDLING EQUIPMENT MATRIX

DESIGNATOR NUMBER	ITEM NAME	SLING		CRIT WELDS		ACTUAL LOADS (lbs)	RATED LOADS (lbs)	PROOF LOAD (lbs)	DESIGN LOAD		VERIFICATION STATUS
		Met	Syn	Yes	No				Ult	Yield	
SEG38117000	Primary Support Stand Assembly	NA	NA	NA	NA						
	Ground Ops (-301) 195.0 in (Length) x 135.7 in (Height) x 125.0 in (Width)					15108.	---	N/A	45324. (LF=1, FS=3)	30216. (LF=1, FS=2)	Stress Analysis
	Transportation (-311) 195.0 in (Length) x 135.7 in (Height) x 125.0 in (Width)					12358.	---	N/A	111222. (LF=3, FS=3)	74148. (LF=3, FS=2)	Open pending final review (Document ESCG-4450-06-STAN-DOC-0003)
	Material: 6061 Aluminum										

NOTES: I Identify whether slings are Metallic (Met) or Synthetic (Syn) by placing an "X" in the appropriate column. For synthetic slings, see Table 4-1 of KHB 1700.7 for the required safety factors and proof load test criteria.

Denote whether to the device has a critical weld by placing an "X" in the appropriate column. If there are critical welds, other test may to applicable (see KHB 1700.7 para. 4.5.1.1.D). A critical weld is a weld, which constitutes a single point of failure. Where feasibly, critical welds should be eliminated.

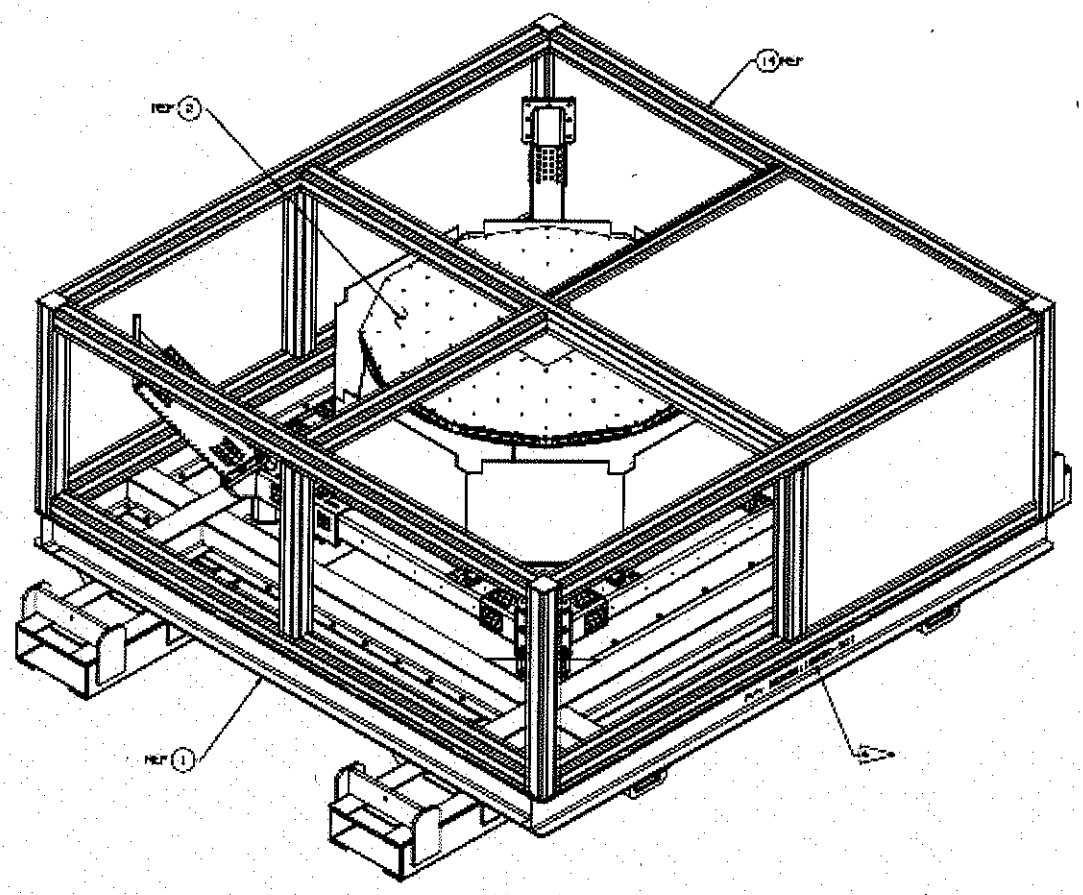

LUSS Shipping Assembly with LUSS and Shipping Panels

GROUND SUPPORT LIFTING/HANDLING EQUIPMENT MATRIX

DESIGNATOR NUMBER	ITEM NAME	SLING		CRIT WELDS		ACTUAL LOADS (lbs)	RATED LOADS (lbs)	PROOF LOAD (lbs)	DESIGN LOAD		VERIFICATION STATUS
		Met	Syn	Yes	No				Ult	Yield	
SEG38116930	Lower USS Shipping Assembly 127.25 in (Length) x 46.7 in (Height) x 97.7 in (Width) Material: 6061 Aluminum	NA	NA	NA	NA	3,051	13,251	26,502	22,120	10,709	Stress Analysis Completed per ESCG-4005-05-STAN-DOC-0102

NOTES: I

Identify whether slings are Metallic (Met) or Synthetic (Syn) by placing an "X" in the appropriate column. For synthetic slings, see Table 4-1 of KHB 1700.7 for the required safety factors and proof load test criteria.

Denote whether to the device has a critical weld by placing an "X" in the appropriate column. If there are critical welds, other test may to applicable (see KHB 1700.7 para. 4.5.1.1.D). A critical weld is a weld, which constitutes a single point of failure. Where feasibly, critical welds should be eliminated.

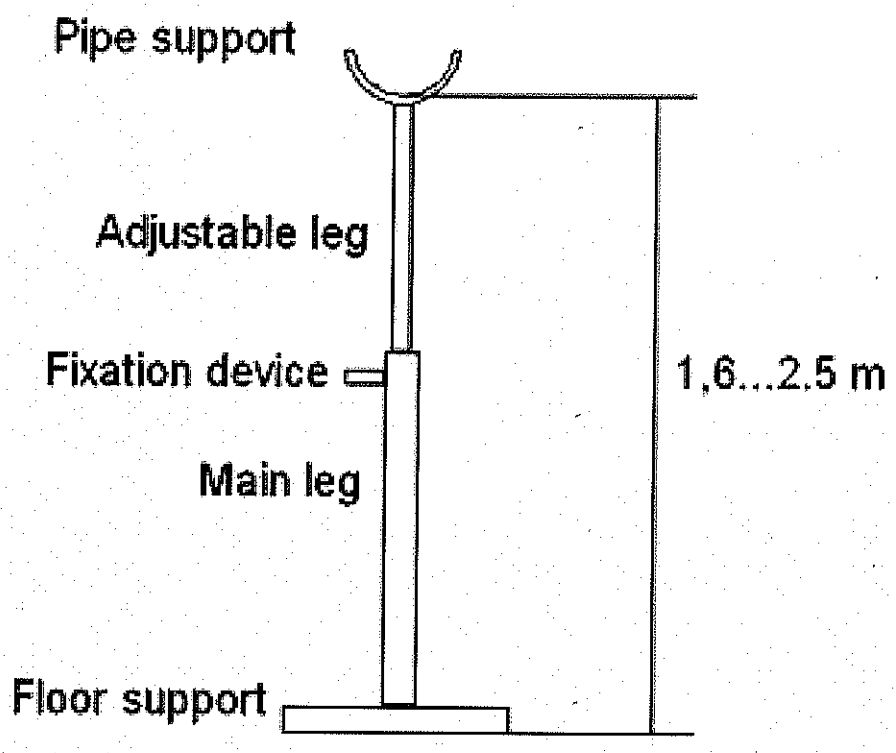

Cryogenic and Vent Line Support Stand

DESIGNATOR NUMBER	ITEM NAME	SLING		CRIT WELDS		ACTUAL LOADS (lbs)	RATED LOADS (lbs)	PROOF LOAD (lbs)	DESIGN LOAD		VERIFICATION STATUS
		Met	Syn	Yes	No				Ult	Yield	
	Cryogenic and Vent Line Support Stand Height: Between 1.6m and 2.5m					TBD	TBD	TBD	TBD	TBD	TBD