PAYLOAD HAZARD REPORT		a. NO: GHR-AMS02-013
b. PAYLOAD: Alpha Magnetic Spectrometer-02 (AMS-02) GSE		c. PHASE: II
d. SUBSYSTEM: Cryomagnet	e. HAZARD GROUP: Magnetic Fields	f. DATE: May 2008
g. HAZARD TITLE: Magnetic Fields		i. HAZARD CATEGORY ☒ CATASTROPHIC ☐ CRITICAL

h. APPLICABLE SAFETY REQUIREMENTS:
KHB 1700.7C, Section 4.3.4. Radiation

j. DESCRIPTION OF HAZARD:

Equipment malfunctions and/or personnel injury due to excessive magnetic fields from the AMS-02 magnet.

k. HAZARD CAUSES:

1. Production of excessive magnetic fields.
2. Equipment placed inside magnetic field range.
3. Personnel inside magnetic field range.

l. HAZARD CONTROLS:

(See continuation sheet)

m. SAFETY VERIFICATION METHODS:

(See continuation sheet)

n. STATUS OF VERIFICATION:

(See continuation sheet)

o. APPROVAL	PAYLOAD ORGANIZATION	SSP/ISS
PHASE I		
PHASE II	[illegible] 10/3/08	[illegible] 10/3/08
PHASE III		

JSC Form 542B (Rev November 22, 1999) (MS Word September 1997)

PAYLOAD HAZARD REPORT CONTINUATION SHEET	a. NO:	GHR AMS02--013
b. PAYLOAD: Alpha Magnetic Spectrometer-02 (AMS-02) GSE	c. Phase	II

k. HAZARD CAUSES:

1. Production of excessive magnetic fields.

l. HAZARD CONTROLS:

1.1 Design of AMS-02 coils limits the strength of the magnetic fields outside of the magnet's core.

1.2 Design of AMS-02 cryomagnet avionics box limits the maximum current that can be introduced into the superconducting magnet coils, limiting the maximum magnetic field generated

m. SAFETY VERIFICATION METHODS:

1.1.1 Review of design.

1.1.2 Measurement of magnetic field.

1.2.1 Functional testing of cryomagnet (at CERN), including avionics.

1.2.2 Review of CAB design.

n. STATUS OF VERIFICATION:

1.1.1	Open
1.1.2.	Open
1.2.1	Open
1.2.2	Open

PAYLOAD HAZARD REPORT CONTINUATION SHEET	a. NO:	GHR AMS02--012
b. PAYLOAD: Alpha Magnetic Spectrometer-02 (AMS-02) GSE	c. Phase	II

k. HAZARD CAUSES:

2. Equipment placed inside magnetic field range.

l. HAZARD CONTROLS:

2.1 Warning signs will be posted indicating keep-out zones for equipment affected by magnetic fields.

2.2 Use of non-magnetic tools if actions required.

m. SAFETY VERIFICATION METHODS:

2.1.1 Review of procedures to ensure placement of warning signs.

2.2.1 Review list of tools to ensure inclusion of non-magnetic tools.

n. STATUS OF VERIFICATION:

2.1.1 Open

2.2.1. Open

PAYLOAD HAZARD REPORT CONTINUATION SHEET	a. NO:
b. PAYLOAD:	c. PHASE:

k. HAZARD CAUSES:

3. Personnel inside magnetic field range.

l. HAZARD CONTROLS:

3.1 Warning signs will be posted indicating keep-out zones for personnel who may be adversely affected by magnetic fields.

m. SAFETY VERIFICATION METHODS:

3.1.1 Review of procedures to ensure placement of warning signs.

n. STATUS OF VERIFICATION:

3.1.1 Open

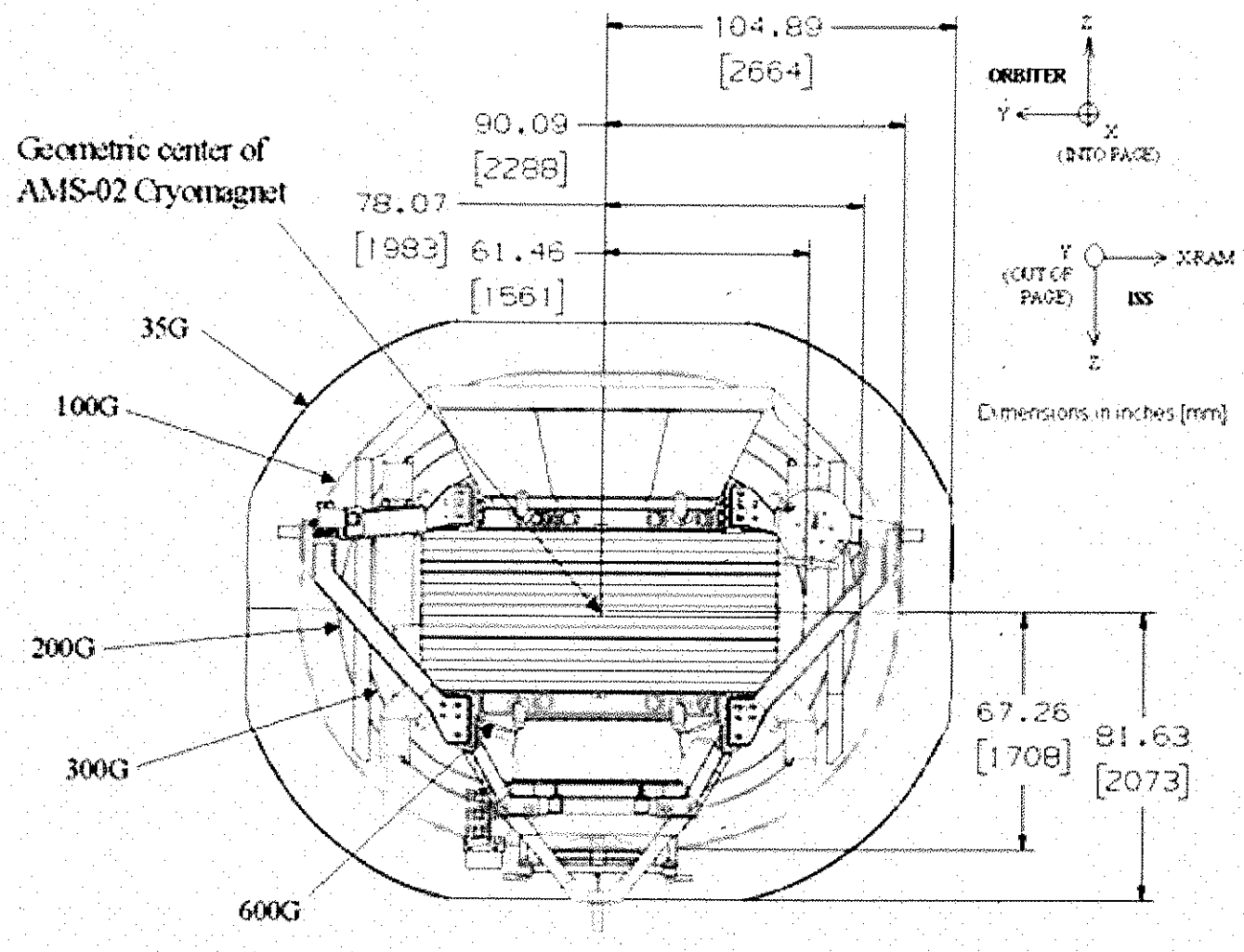

AMS-02 External Magnetic Field