Star Tracker: Thermal Design

preliminary

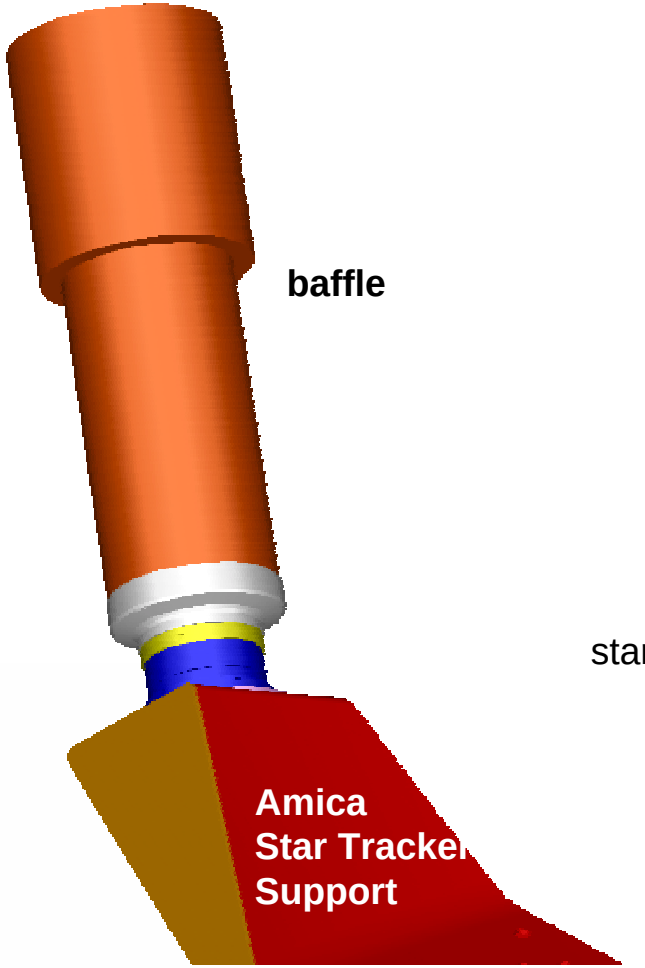

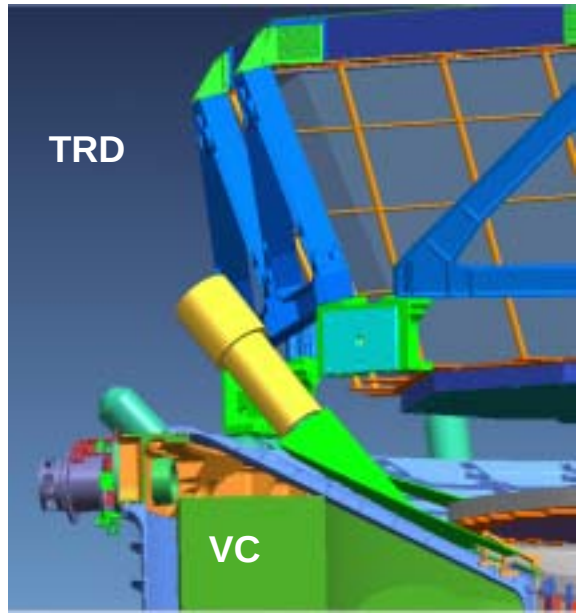

star trackers in AMS_02

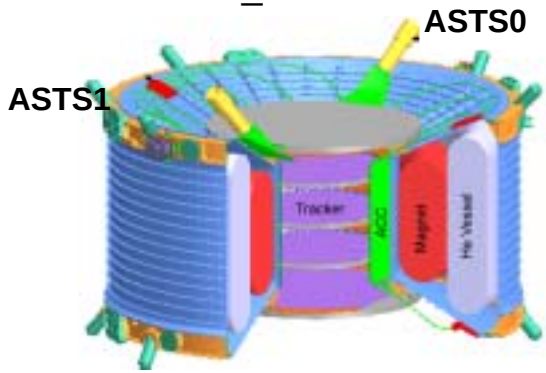

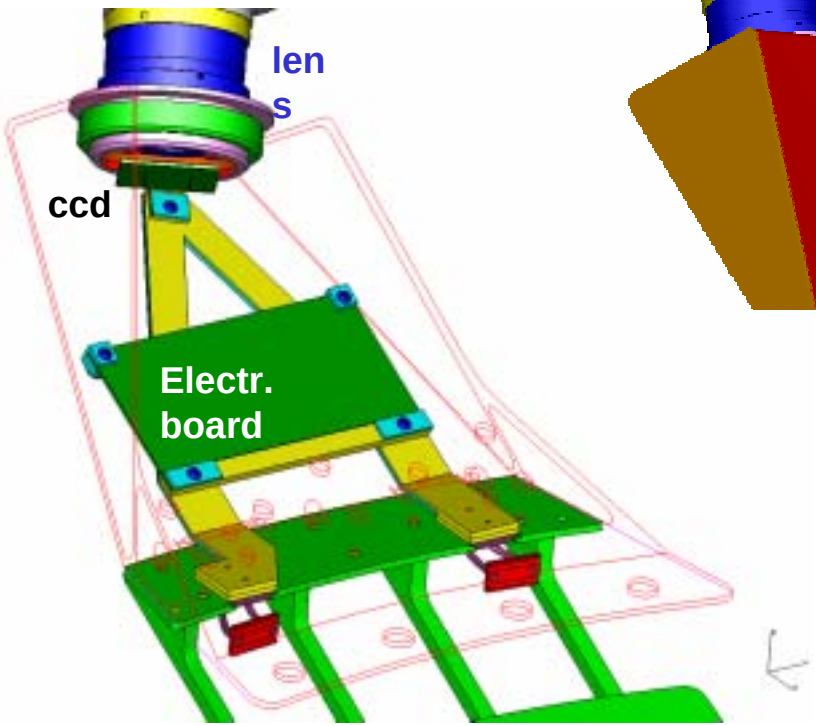

Star Tracker Thermal Boundary Conditions

Thermal BC

-Electronic Power: 3.6 W per camera
-CCD Power: 0.4W per camera

-CCD Operational Temp. -30º to 40º C
-CCD Survive Temp. -40° to 100°C

-Lens angular stability ~20 ArcSeconds
(structure thermo-elastic stability)

-TTCS interface
-SiTracker mechanical interfaces:
Plane1-Conical Flange

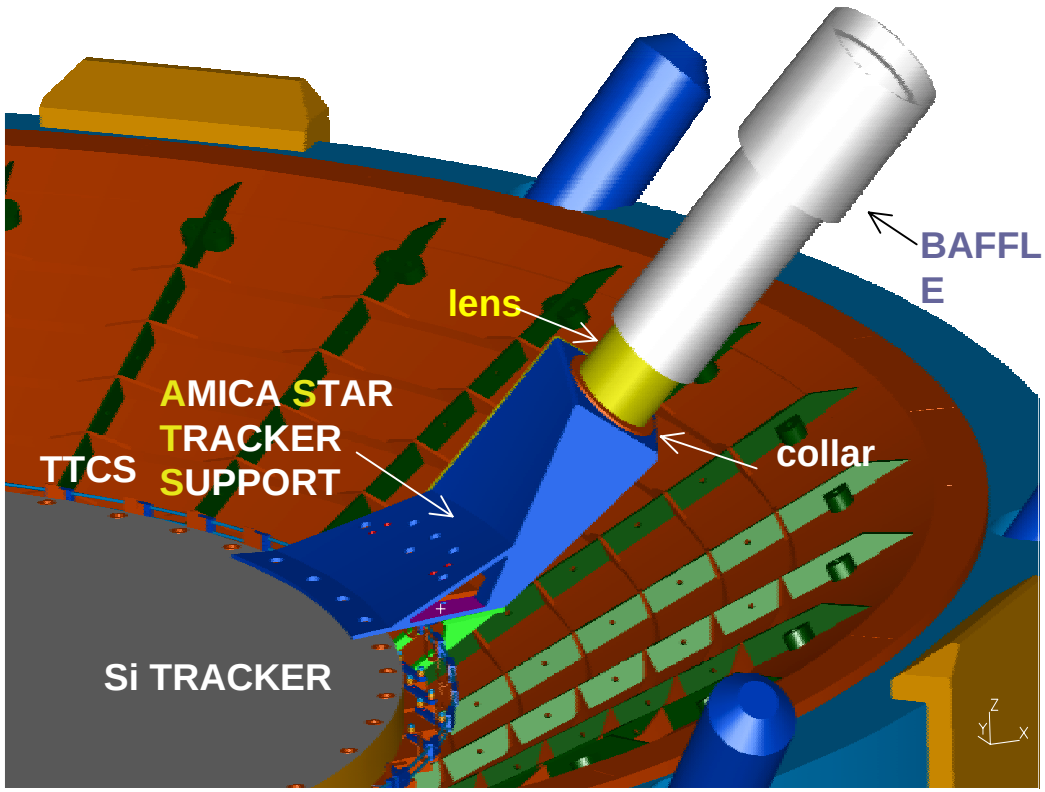

Materials

ASTS *Composite material*
HM CF/Cyanate_ester resin
Collar *Al alloy*
Lens *Glass/ Al alloy*
Filter *GG475+KG2*
Baffle *Al alloy Al 6061*
internal:Black anodized
external:Gold Alodine/silver tape

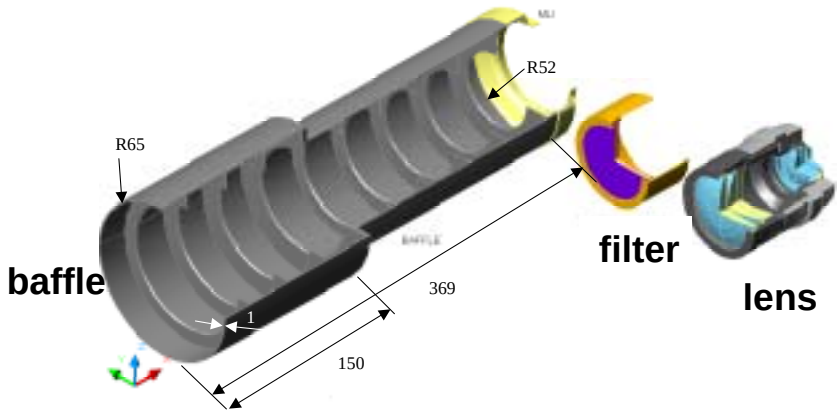

ASTS Baffle

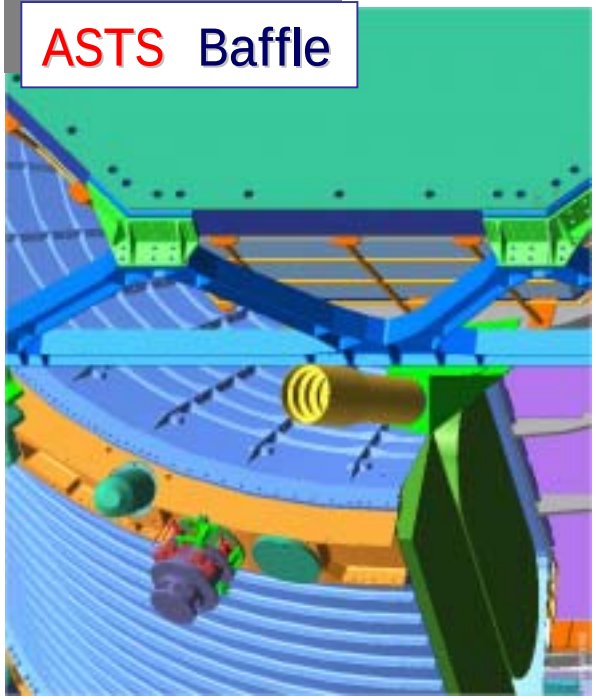

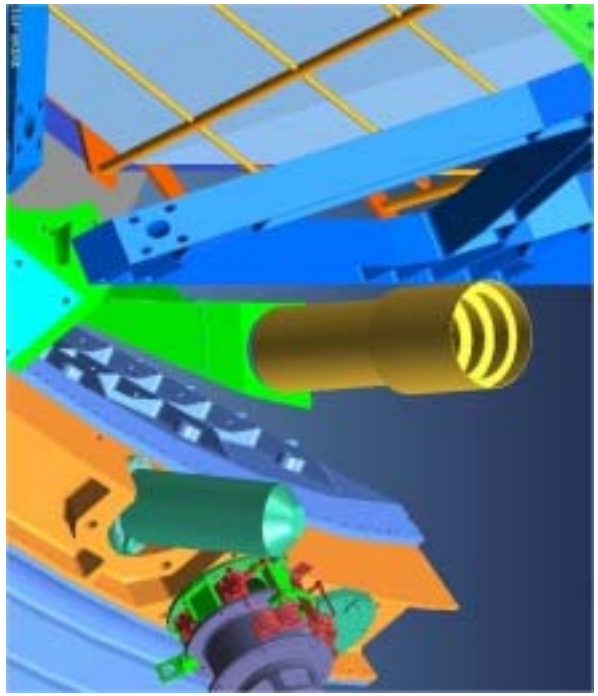

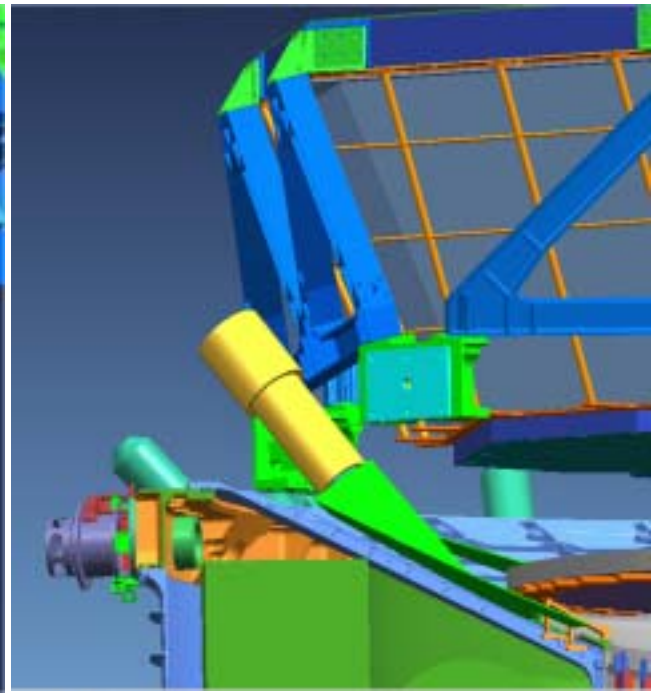

Baffle MECHANICAL **CONNECTION to AMS_02:** ISATEC is evaluating impact on M-Structure

Baffle **CONNECTION to lens**: Mechanical: NO
Optical: YES

Internal Baffle BLACK ANODIZED

External Baffle GOLDEN ALODINE

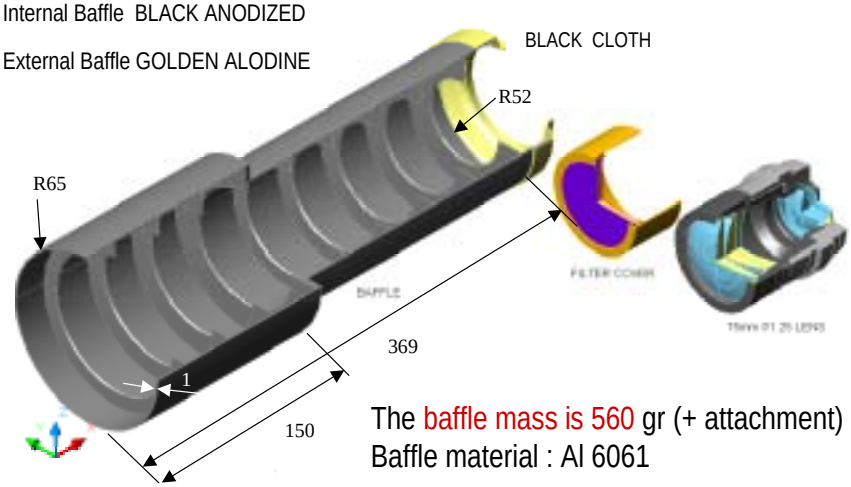

The baffle mass is 560 gr (+ attachment)
Baffle material : Al 6061

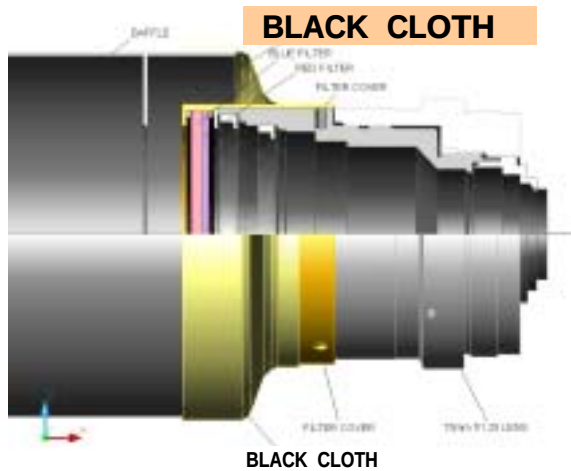

Optical connection between lens and baffle is generically indicated as Black Cloth

ASTS Star tracker new design purposes

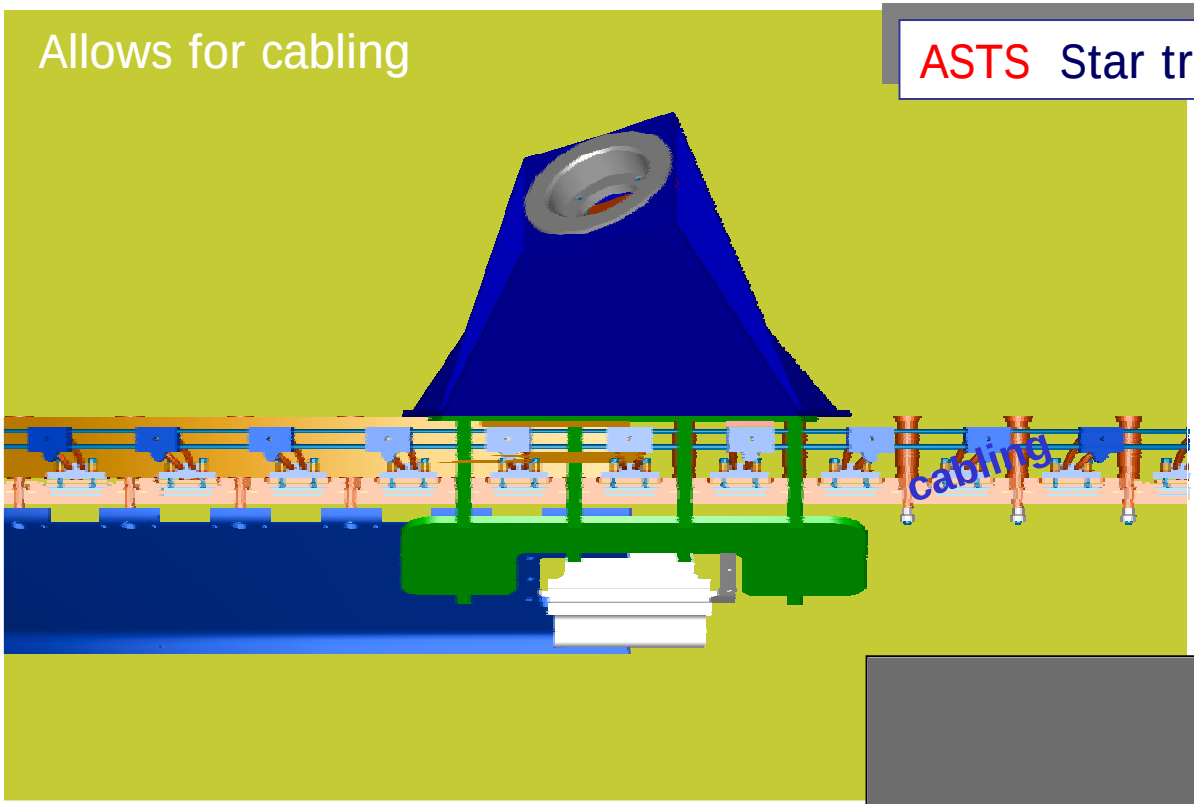

old

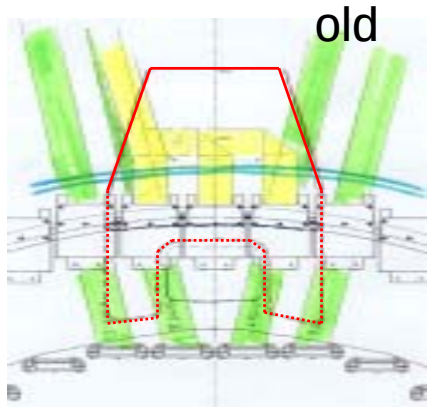

new

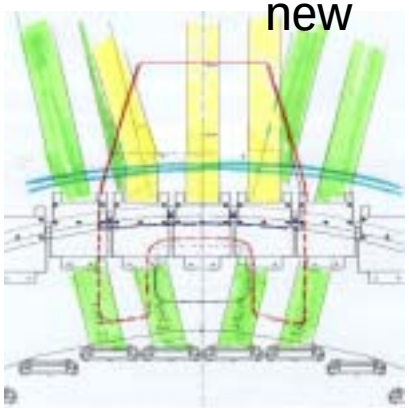

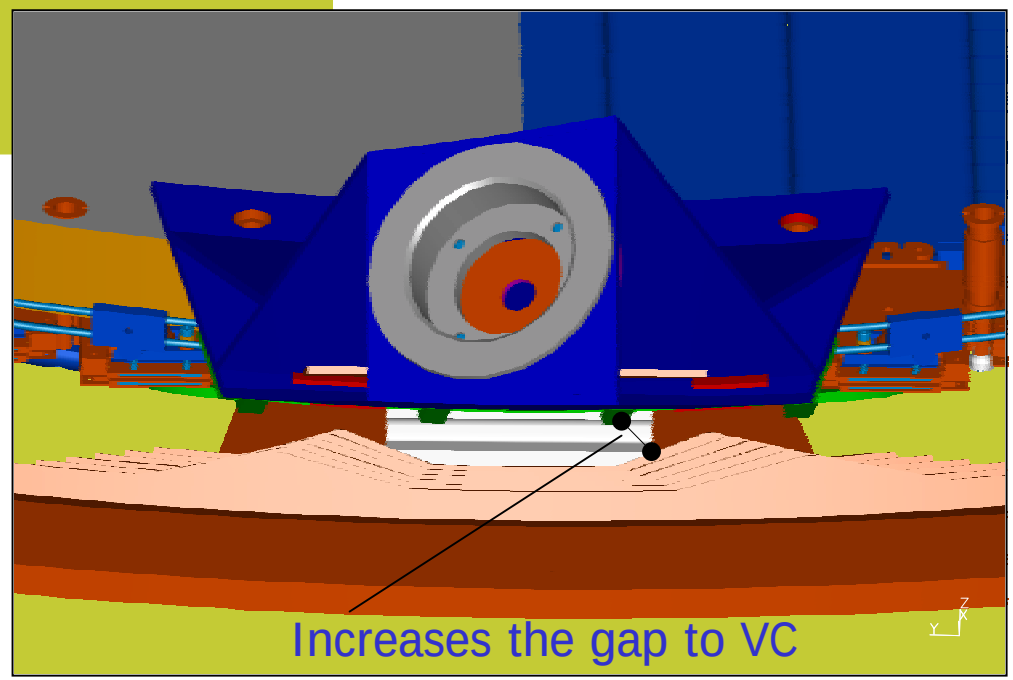

ASTS Mechanical Interfaces

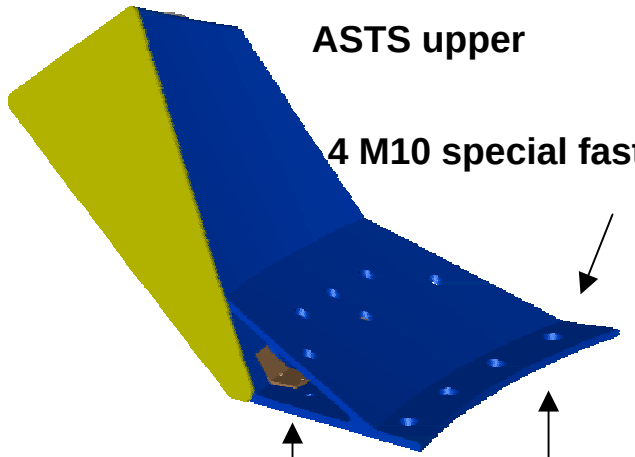

ASTS upper

4 M10 special fastners into Plane1 inserts

Screwed connection between upper and lower ASTS

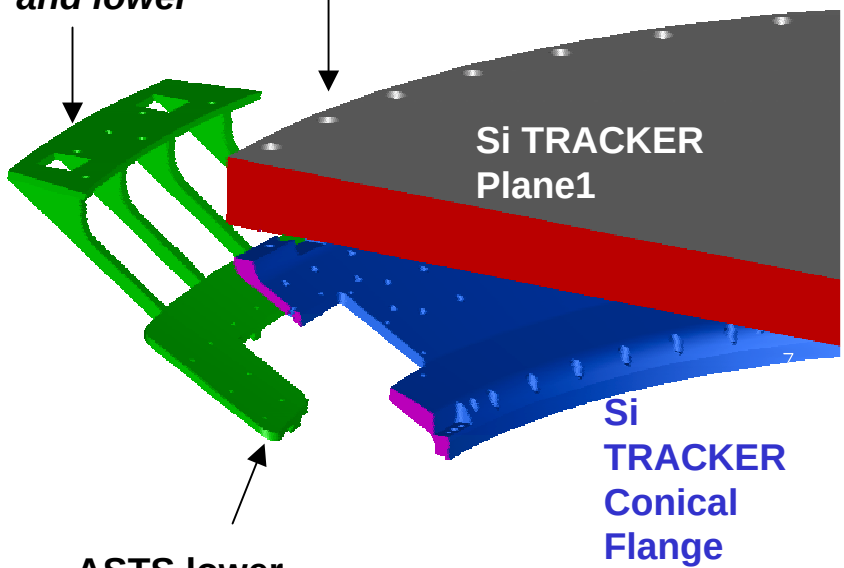

ASTS lower

Hybride joint

n. 16 M3 screws/glue

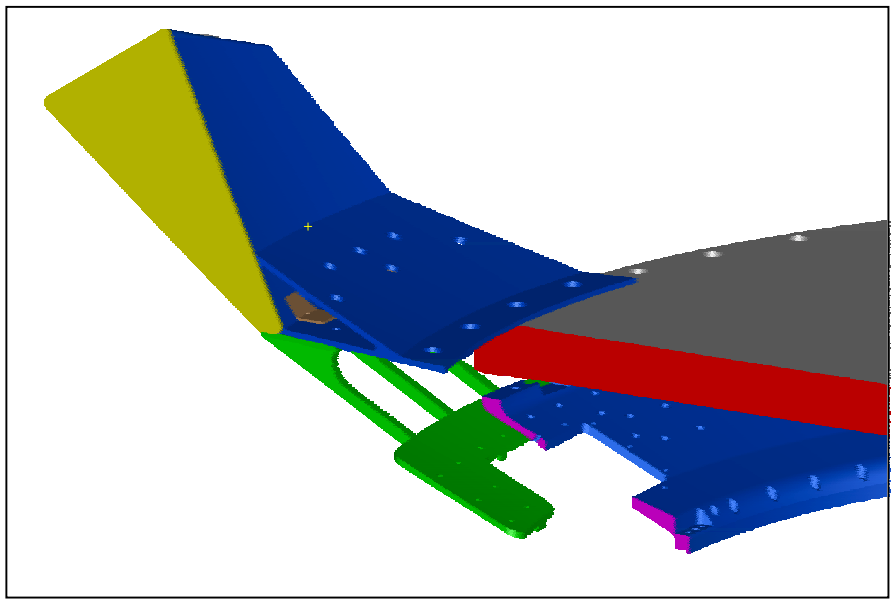

ASTS Thermal Interfaces

Thermal Interfaces

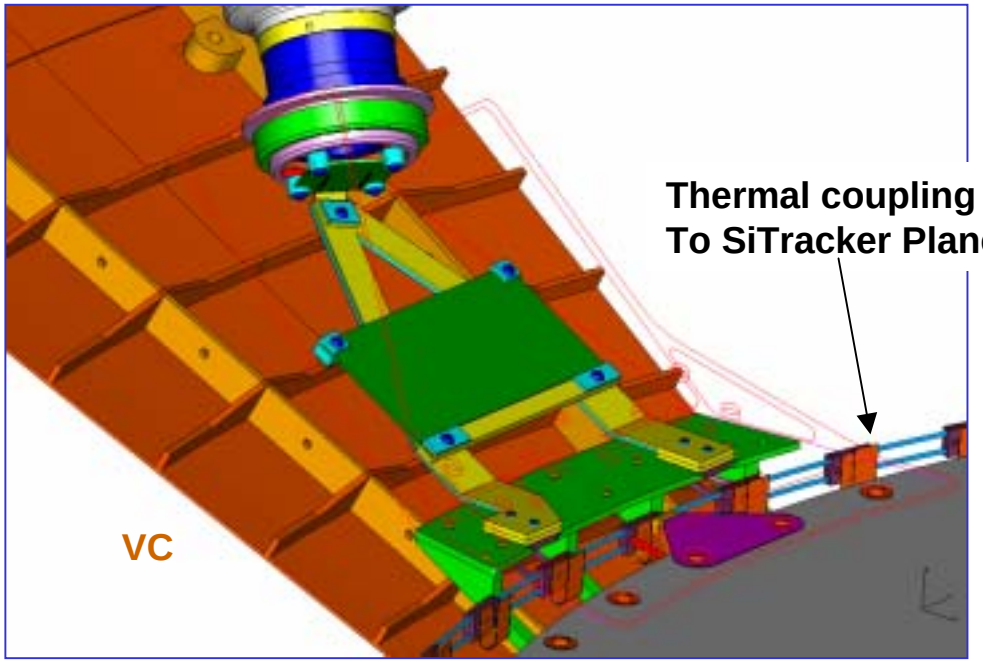

Thermal coupling
To SiTracker Plane1

Nodes 110101- 110116
110108-110109

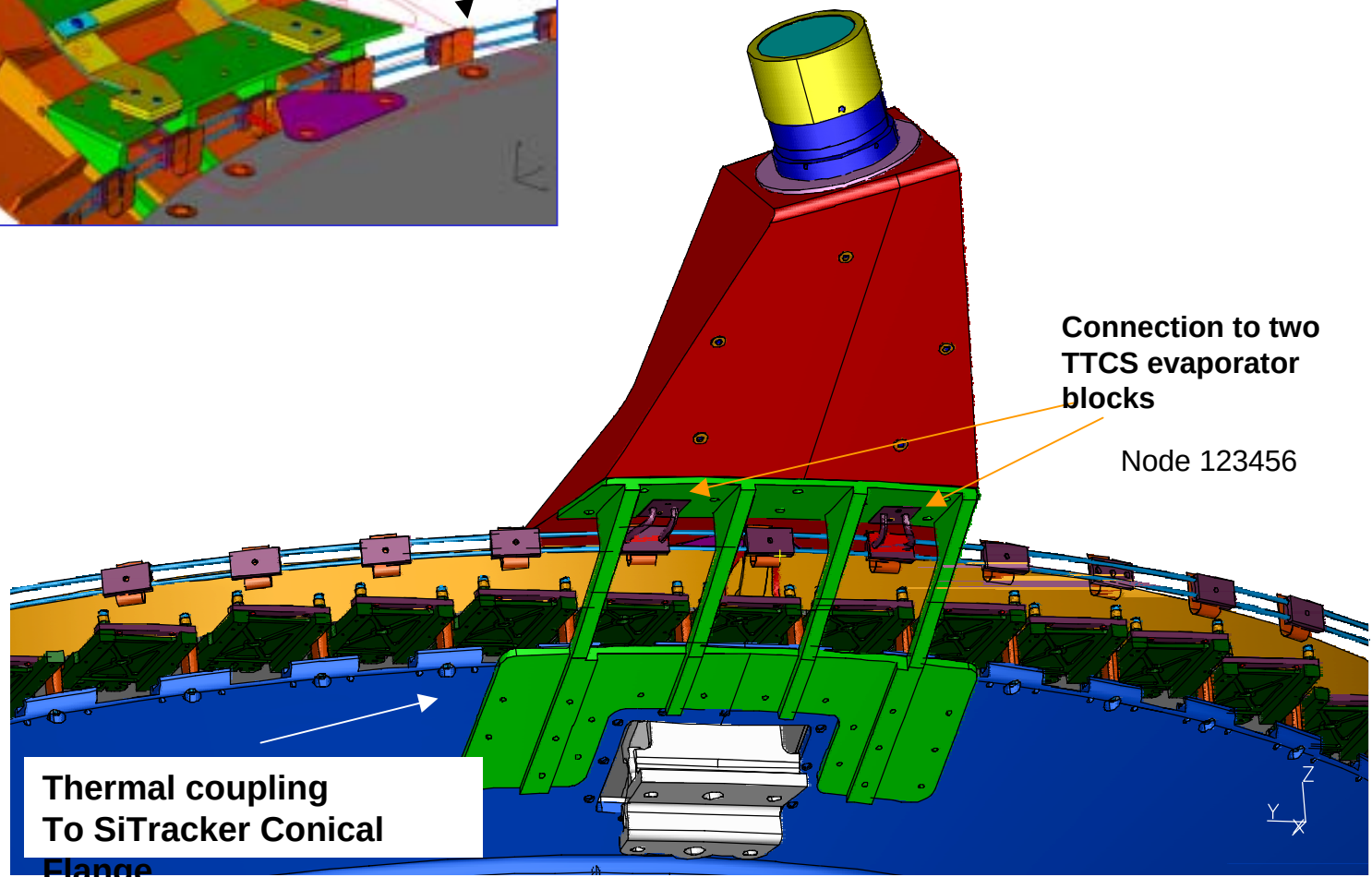

Connection to two TTCS evaporator blocks

Node 123456

Nodes 210301-210316
210308-210309

Thermal coupling
To SiTracker Conical Flange

Star Tracker Internal Thermal circuit

Internal Thermal circuit

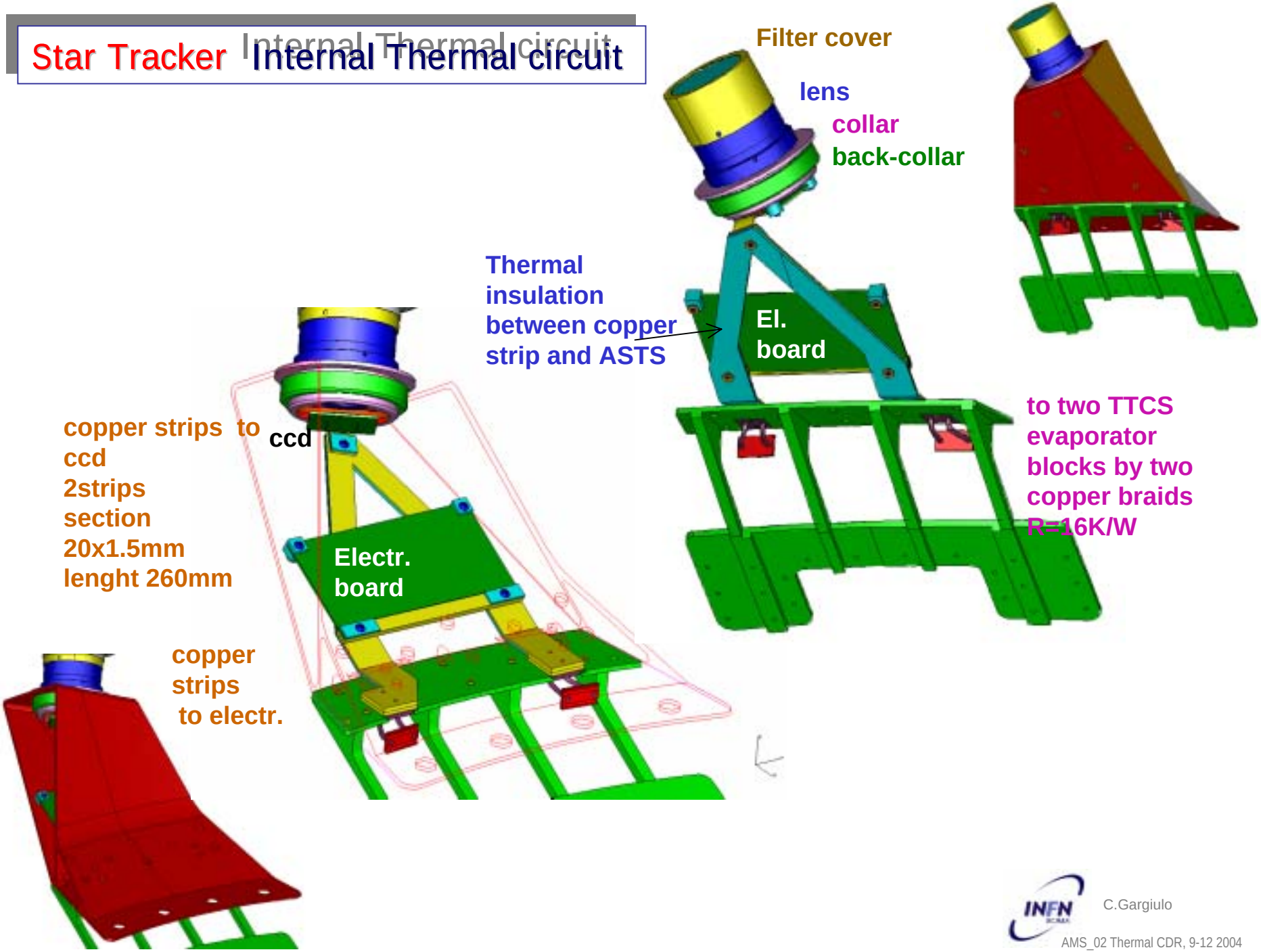

ASTS Thermal Interfaces

Thermal Interfaces

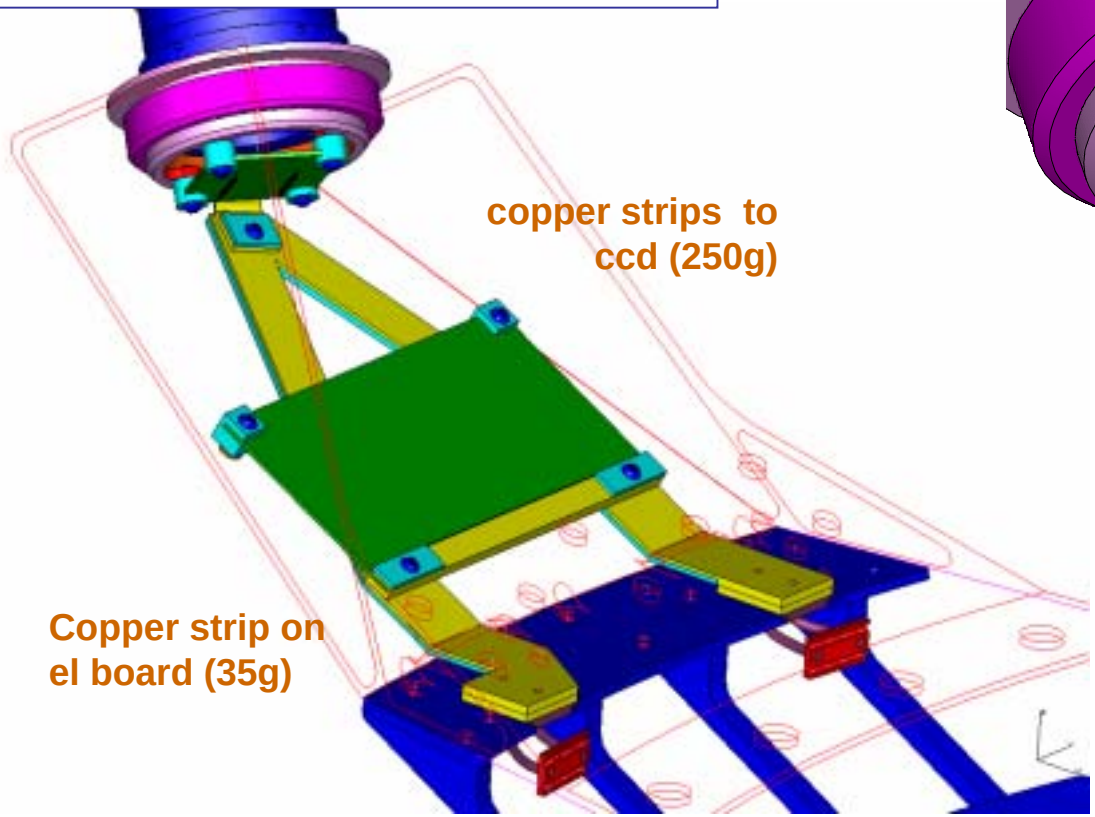

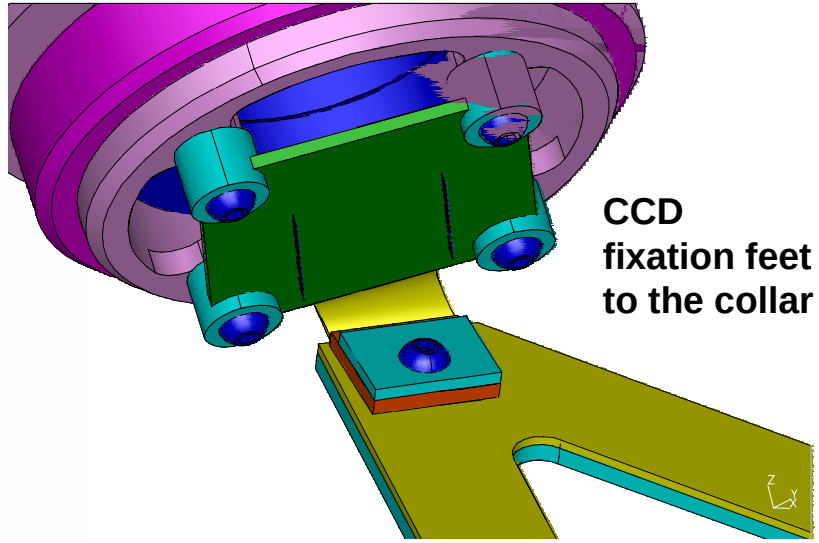

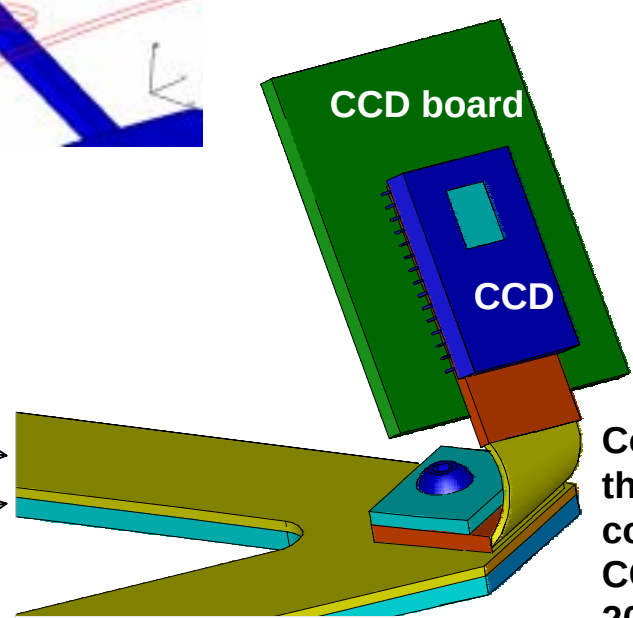

Star Tracker GMModel & TMModel for CG

Based on old geometry

Developed with I-deas TMG

GMM exported to Radcad
TMM translated into Sinda

old geometry

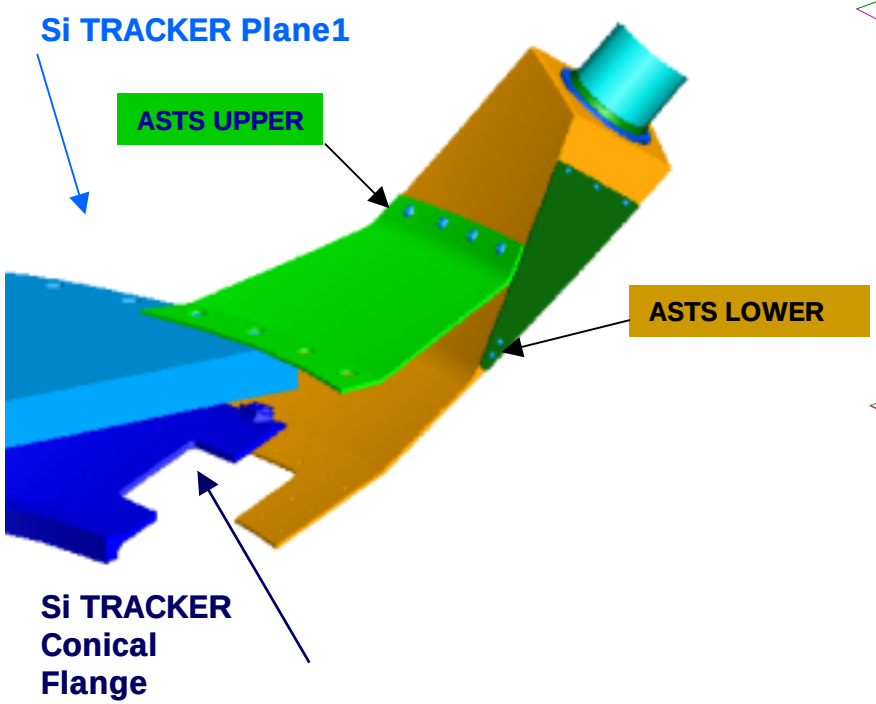

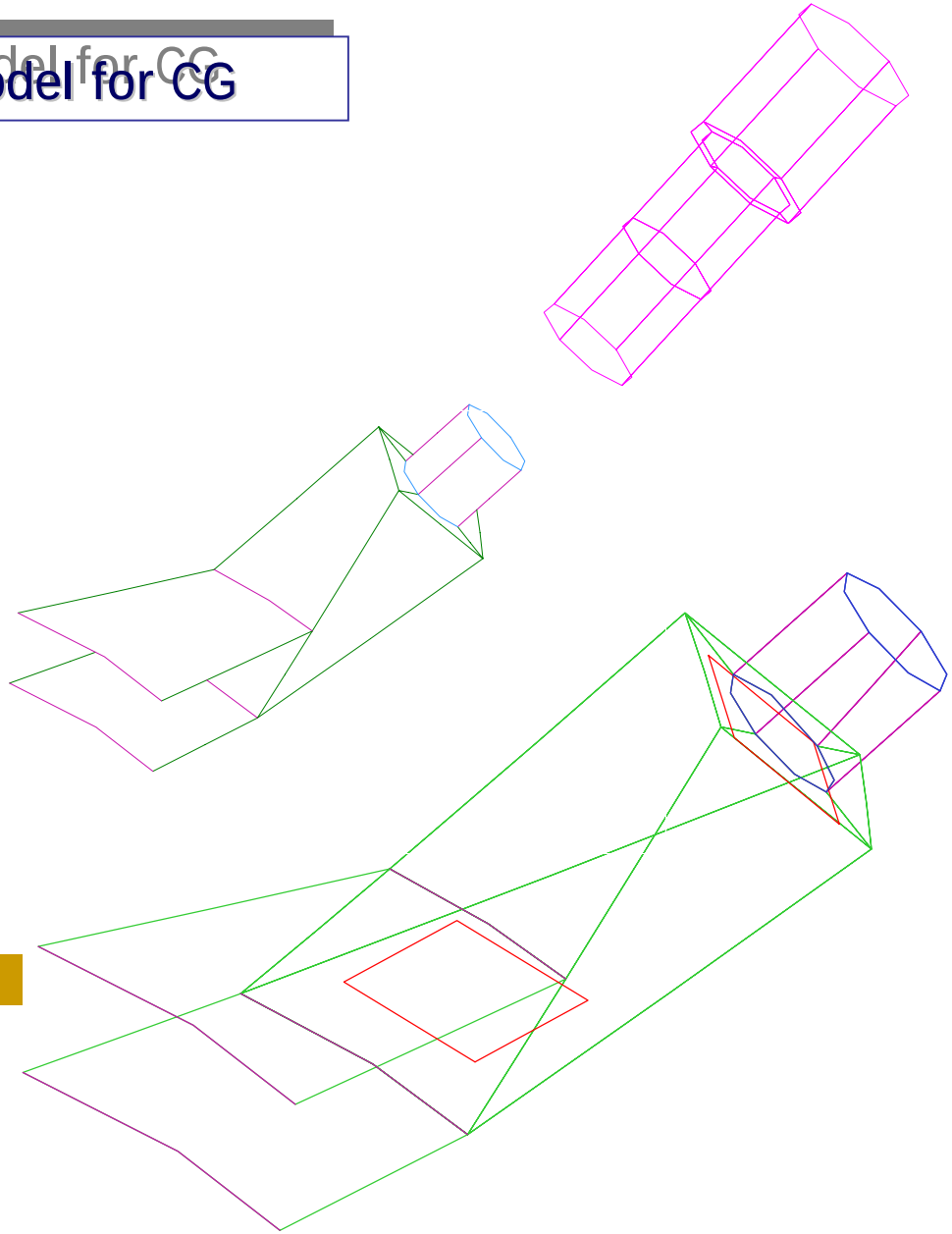

Star Tracker Thermal detailed model

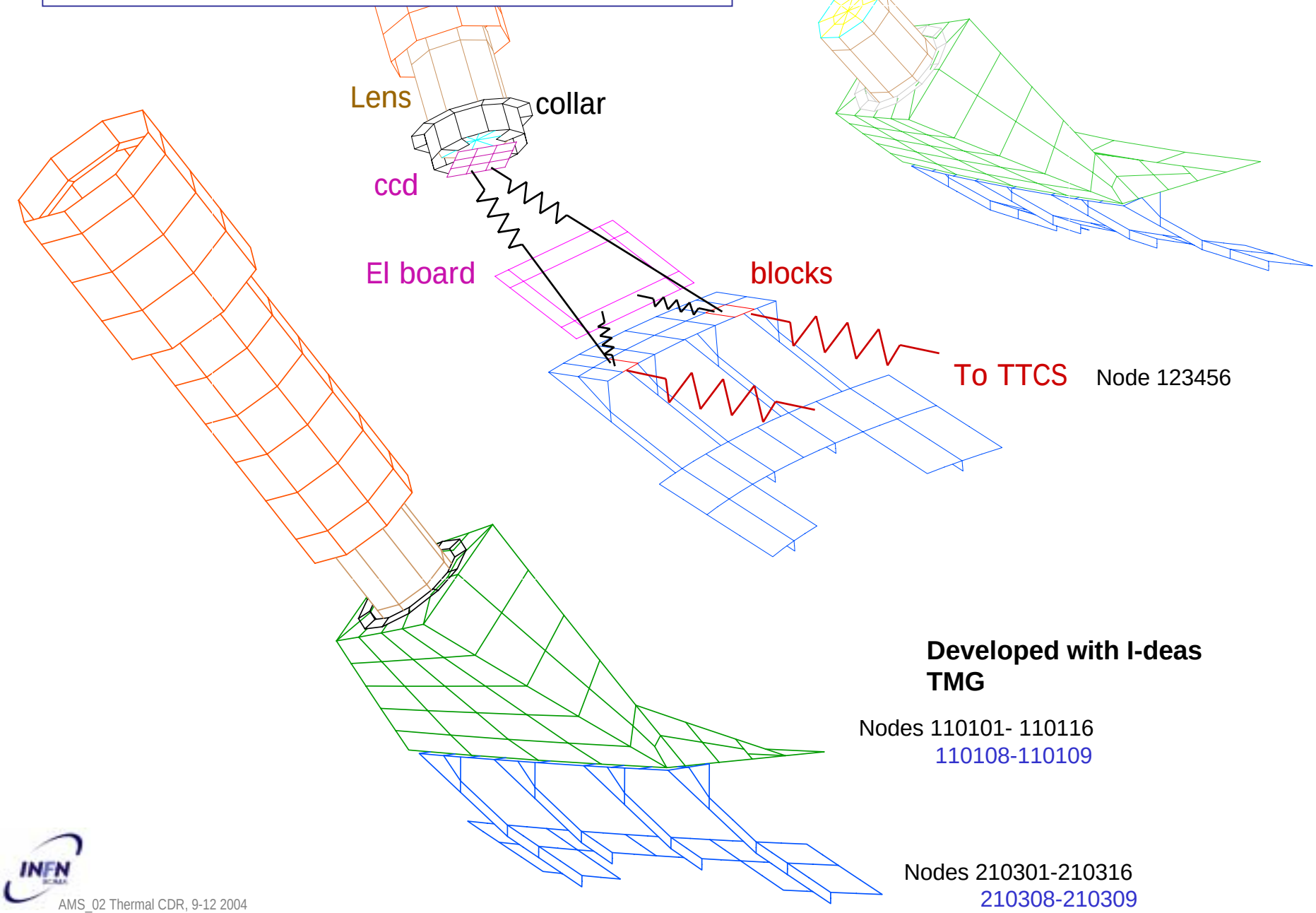

Developed with I-deas TMG

Analysis

IF data received from CG related to unpowered tracker and star tracker

B+75-15-20-15_hot ; B+75+15+15-15_hot;B_0-2-10_1_hot; B-75-15+15-15_cold; B+75-15+15+15_cold

IF data used

to verify detailed thermal model and to run first analysis with some assumptions,

to develop an updated semplified model

IF data must be verified with the new semplified thermal model, to be integrated in CG global moldel

Resulting IF data with powered Tracker and StarTracker will be analysed

Analysis: preliminary results

Preliminary results, generated from the analysis of IF data with a preliminary assumption of the TTCS loop point, individuate the B_75_15_20_15_hot as a possible critical orbit due to the high temperature at the front (lens)

Analysis is based on a passive thermal control for lens and structure and an active thermal control for ccd and electronics

Baffle not analised as its interface with AMS still pending (ISATEC is verifing structural impact on M-structure)

IF data applied to detailed model

IF_DATA_
B_75-15-20-15_HOT_STAR_TRACKER

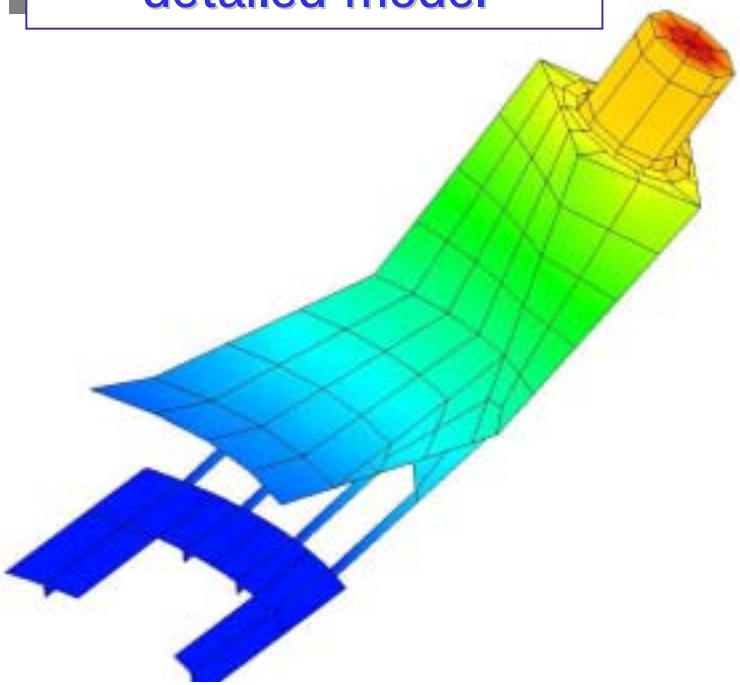

IF data:
Tracker and StarTracker unpowered
Loop point suggested at 15°C
Tracker plane1 28°C
Tracker Conical Flange 29°C

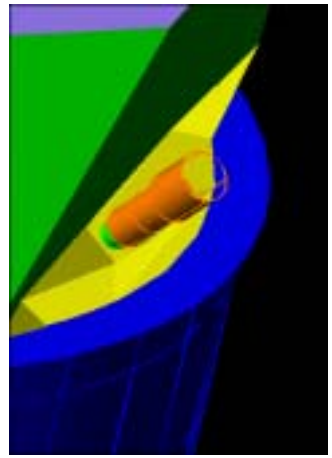

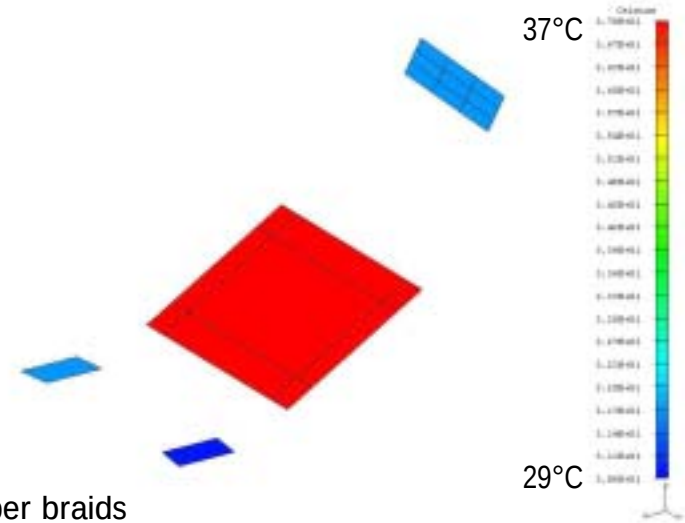

4_copper braids

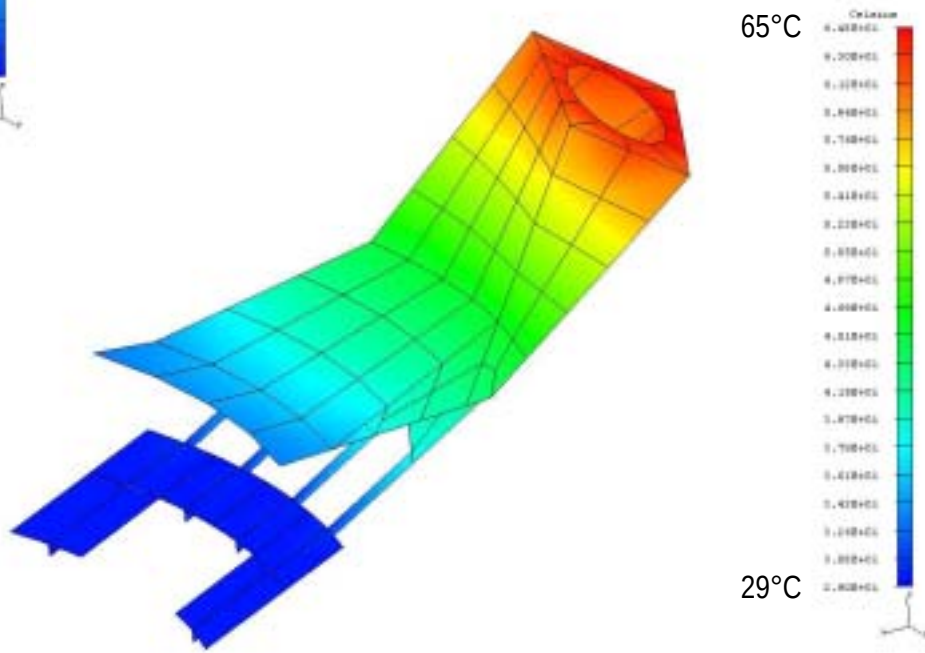

IF data to be verified with updated model

Star Tracker: Thermoelastic analysis

Results from thermal analysis with refernce to
IF_DATA_B_75-15-20-15_HOT_STAR_TRACKER
applied as boundary conditions to the ASTS

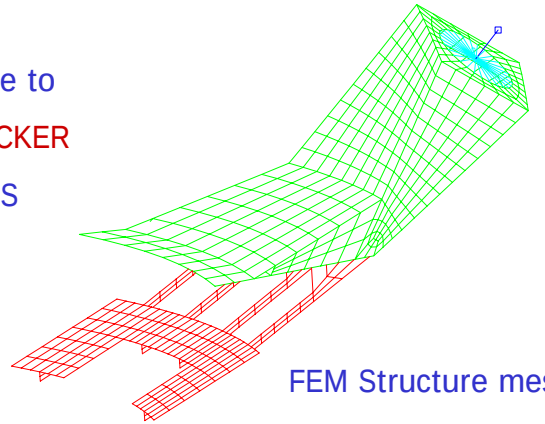

FEM Structure mesh

preliminary

Displacement

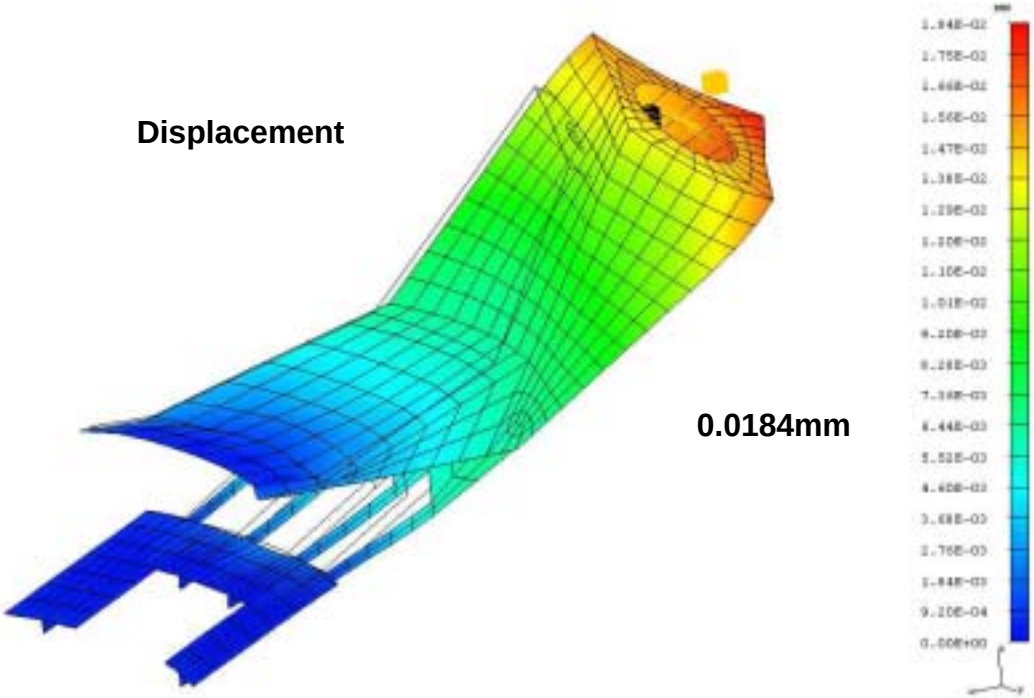

0.0184mm

Rotation

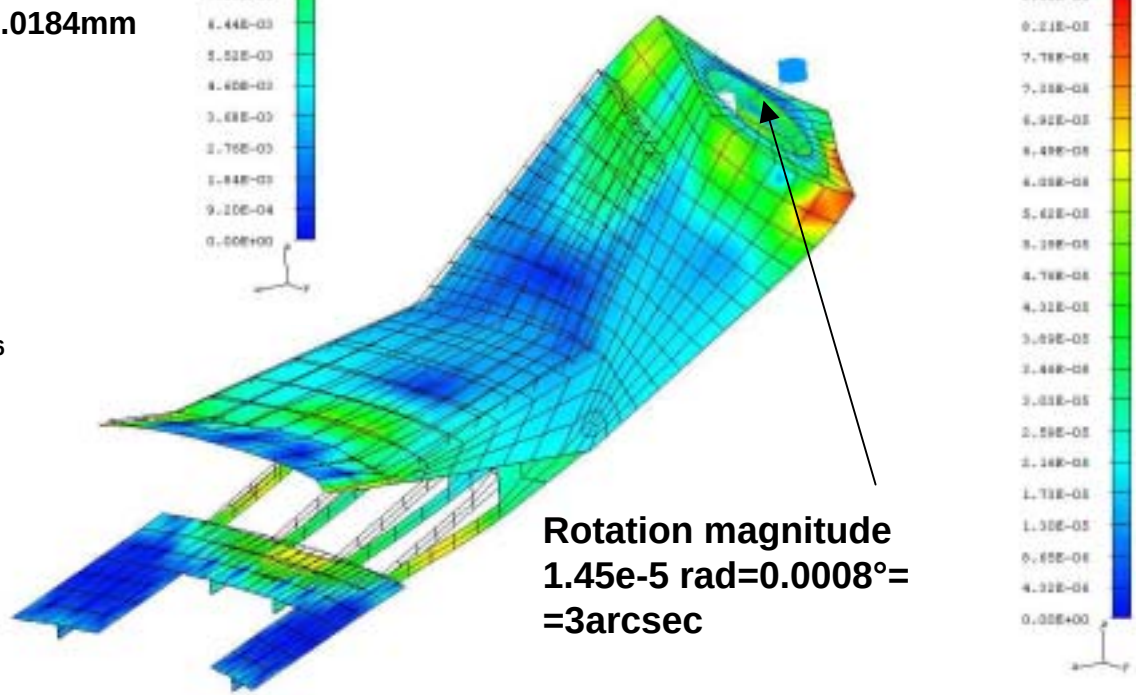

Rotation magnitude
1.45e-5 rad=0.0008°=
=3arcsec

Lamina CTEx=-1.16 10^{-6} °C^{-1} ; CTEy=-37.4 10^{-6} °C^{-1}

Wall Lay up quasi isotropic (0°,45°,90°,-45°)3S

Wall in Plane CTE assumed 1.7 10^{-6} °C^{-1}

Wall thickness t=3mm

VALUES to be optimized with material definition and to be verified by test

Assunption

This condition could be close to a configuration that foresees Lens wrapped in MLI ...
for B_75-15-20-15

APPLIED THERMAL BOUNDARY CONDITION

80 °C only at filter (front of the lens)
22°C at Si Tracker Mechanical Interfaces
15°C TTCS loop point

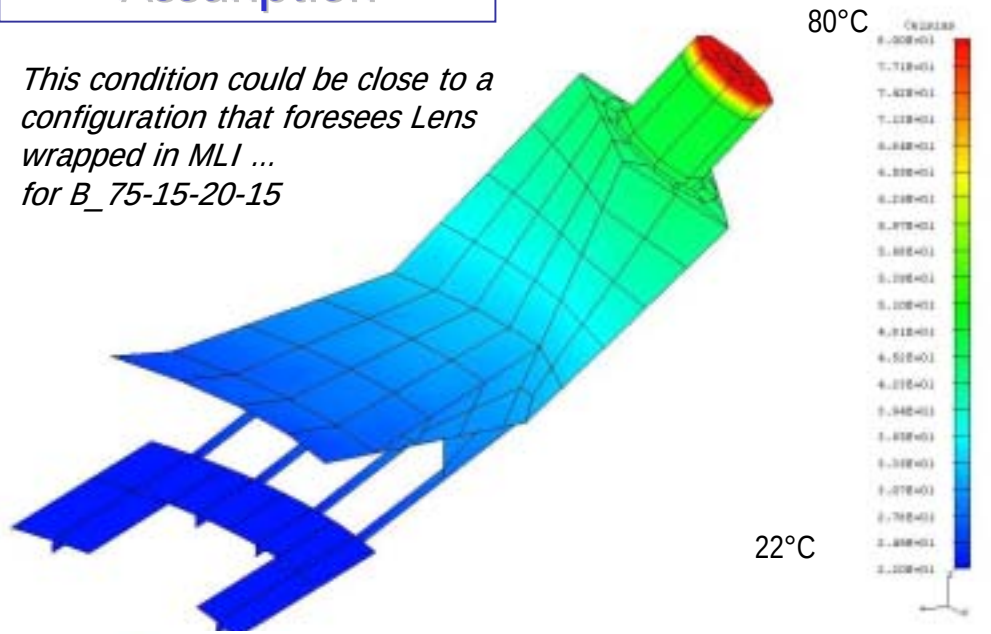

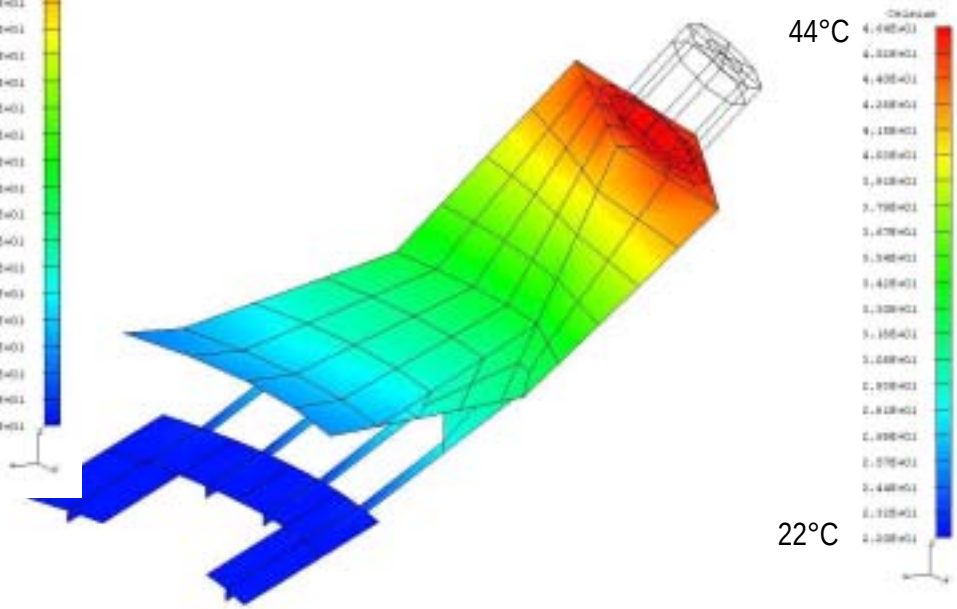

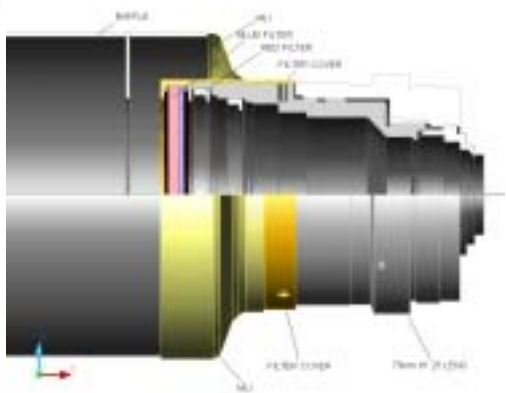

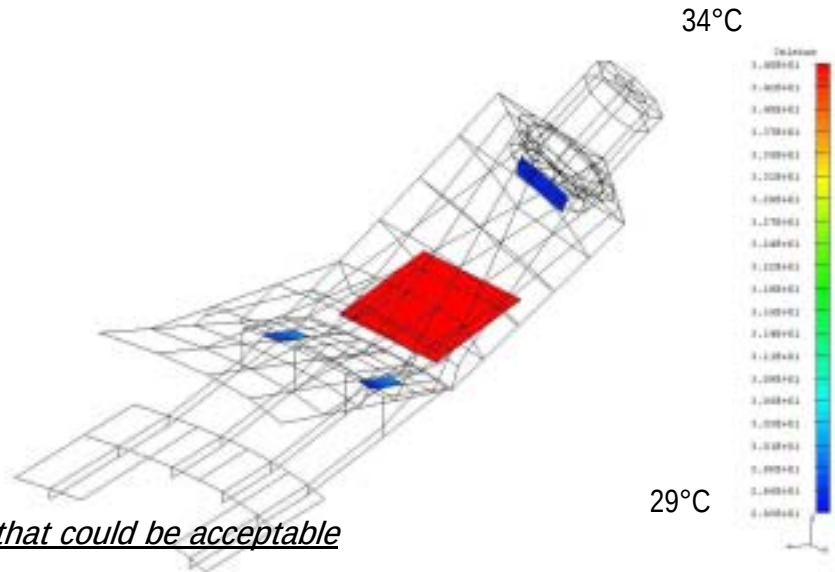

<u>produce not extremely severe conditions for both lens and structure that could be acceptable</u>

StarTracker to TTCS

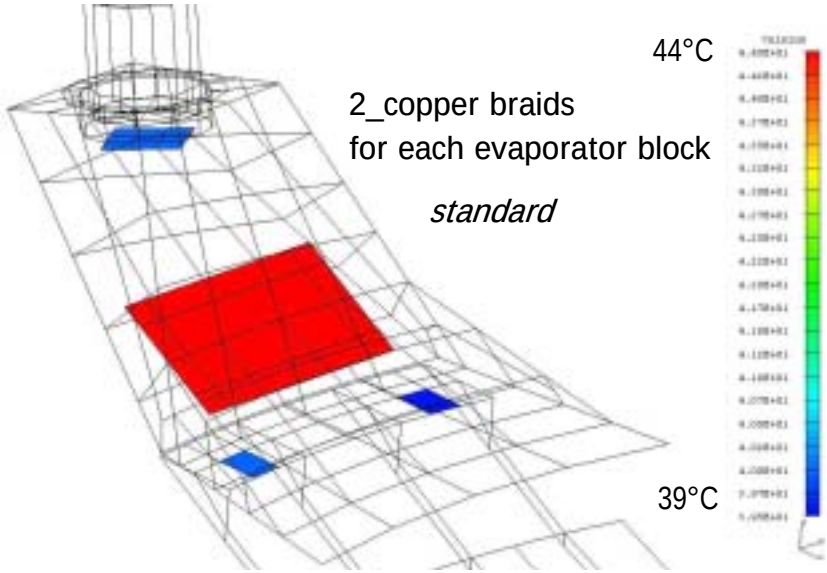

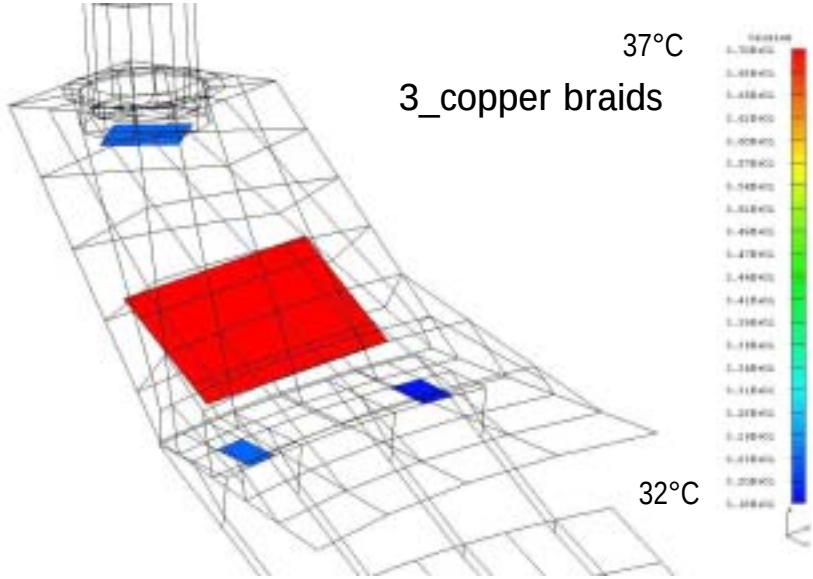

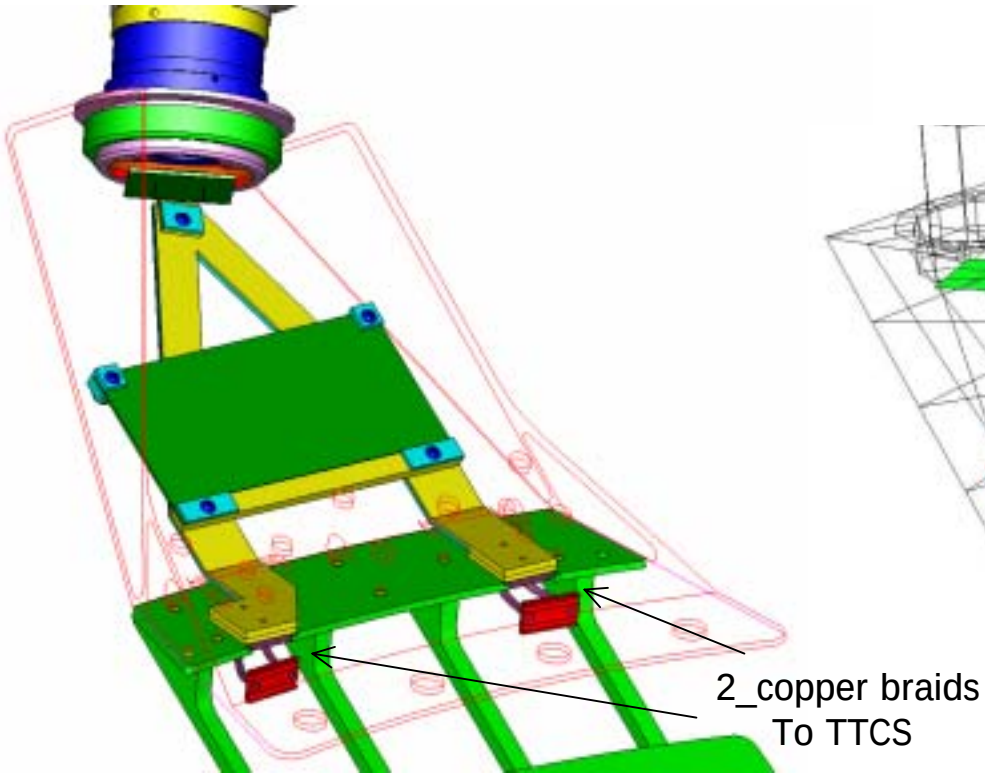

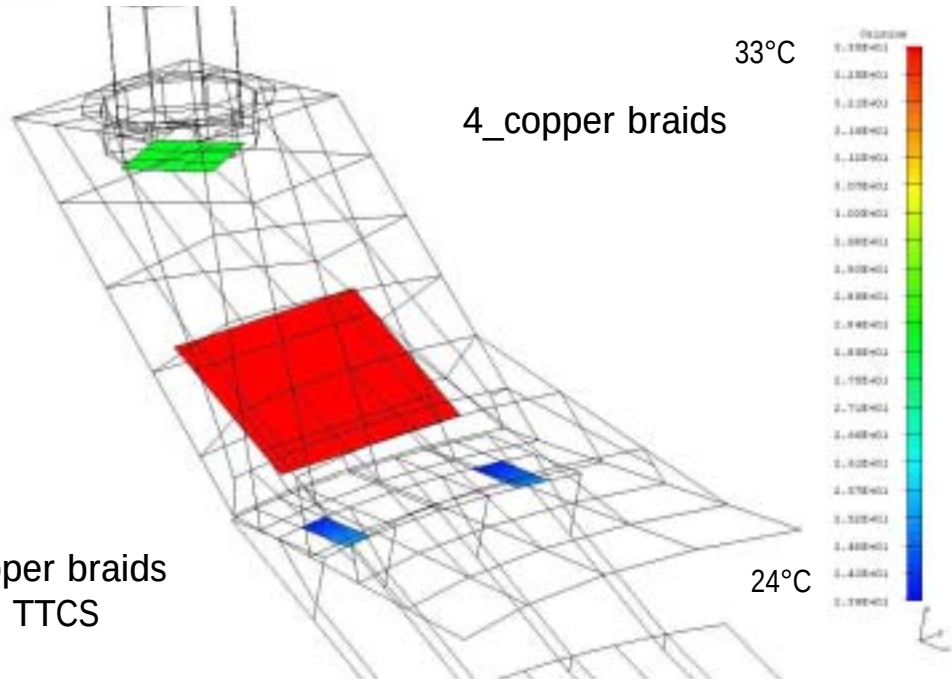

Star Tracker updated thermal model for CG IF data generation

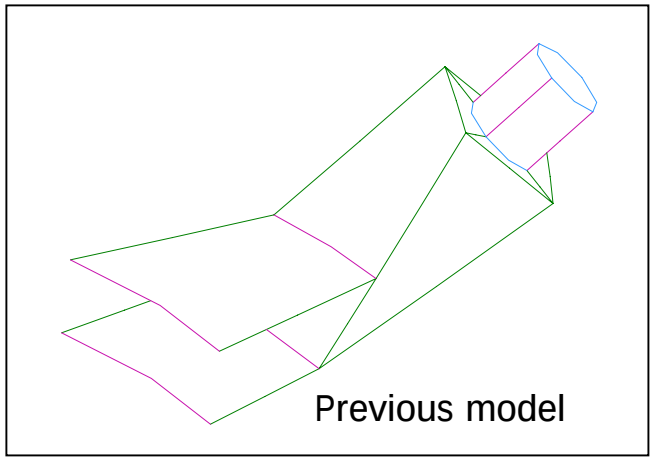

New model

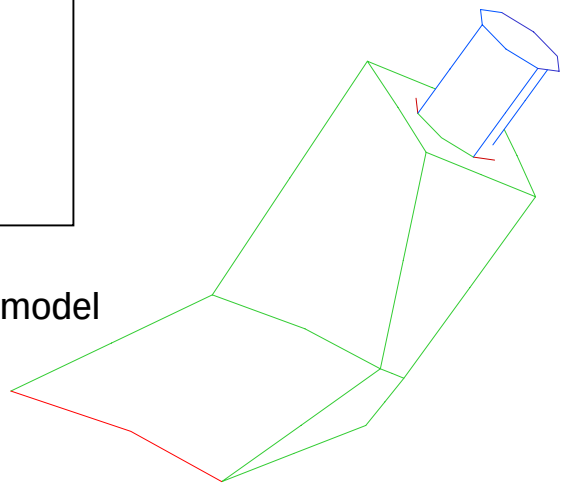

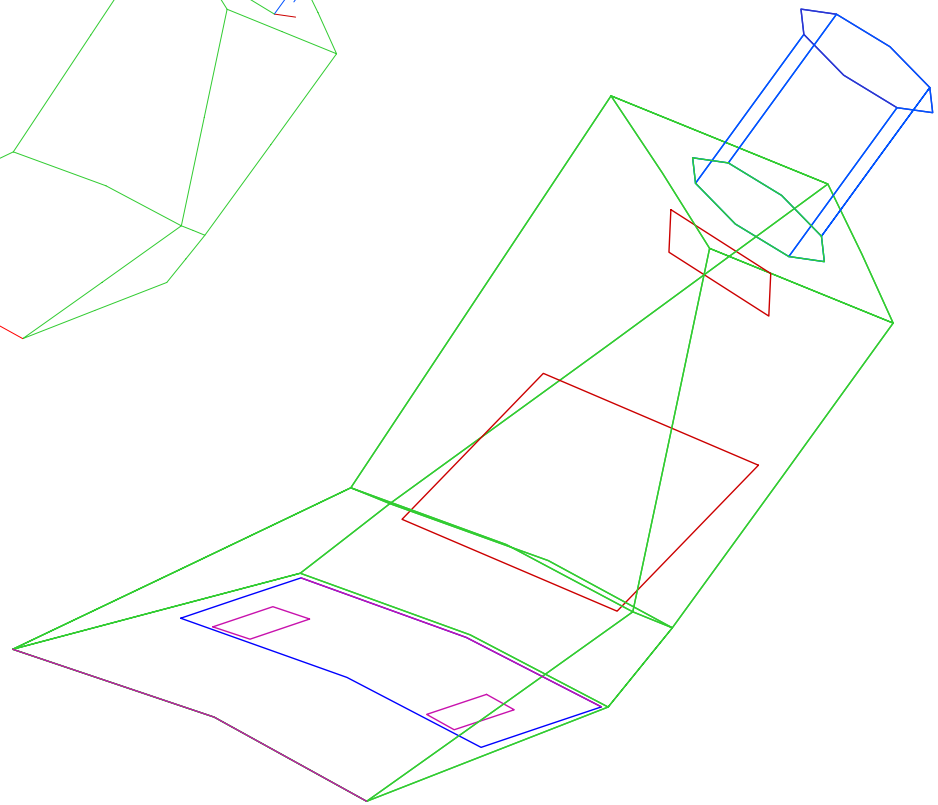

NEXT
New analysis considering
lens covering (wrapped in MLI at the side ,...)

Assumption 1

This condition could be close to the present configuration where no MLI cover the lens at the side

for B_75-15-20-15

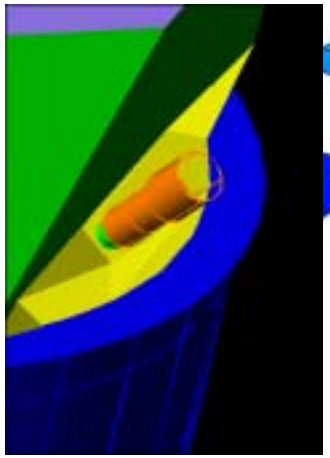

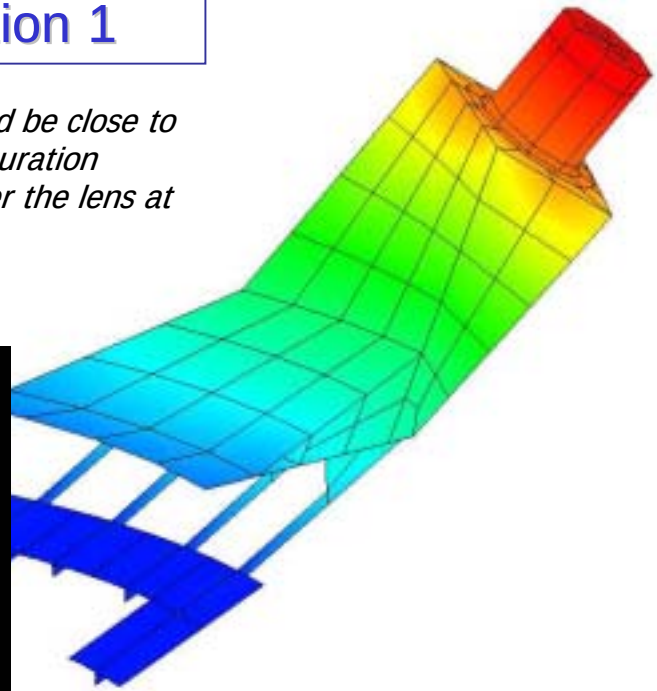

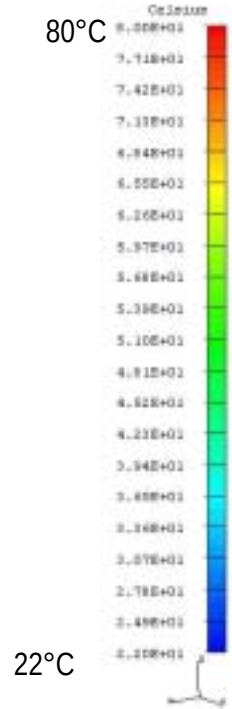

APPLIED THERMAL BOUNDARY CONDITION

80 °C at lens
22°C at Si Tracker Interface
15°C TTCS loop point

<u>produce critical condition for the structure stability and high temperature at lens</u>

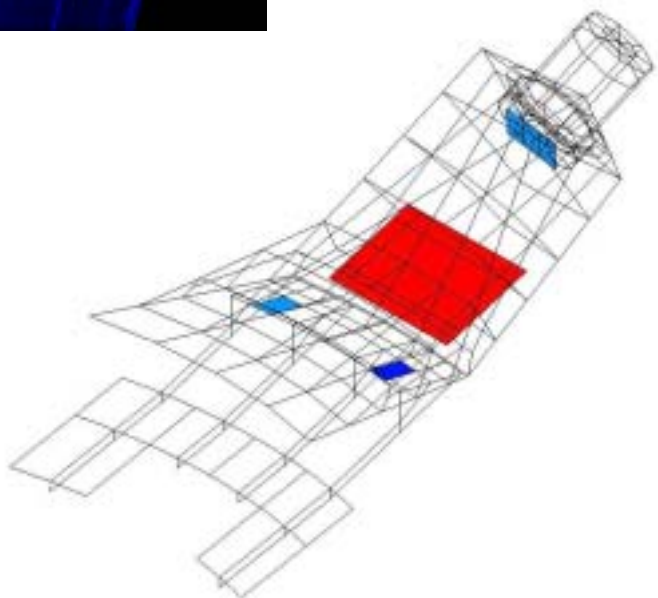

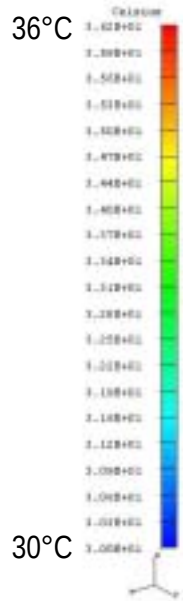

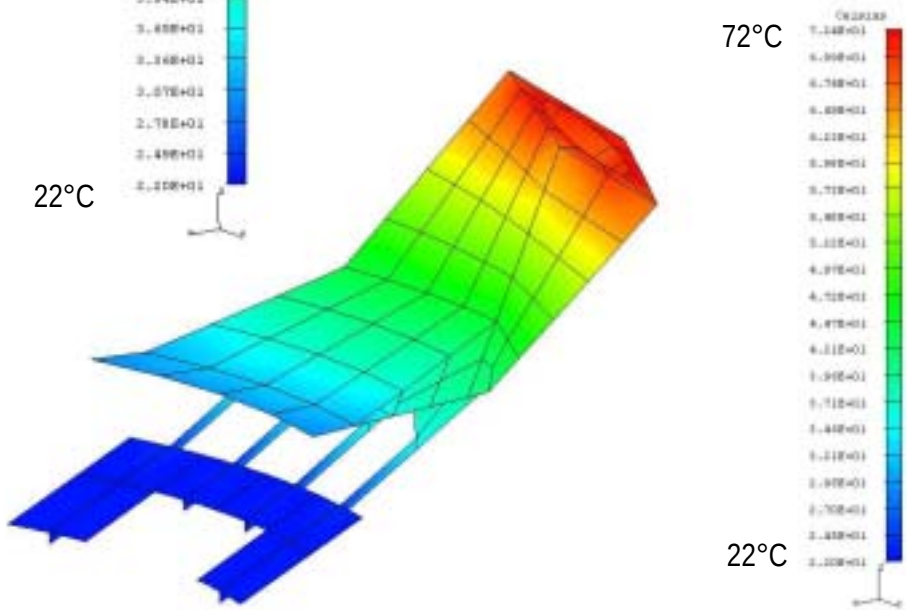

Assmption 1

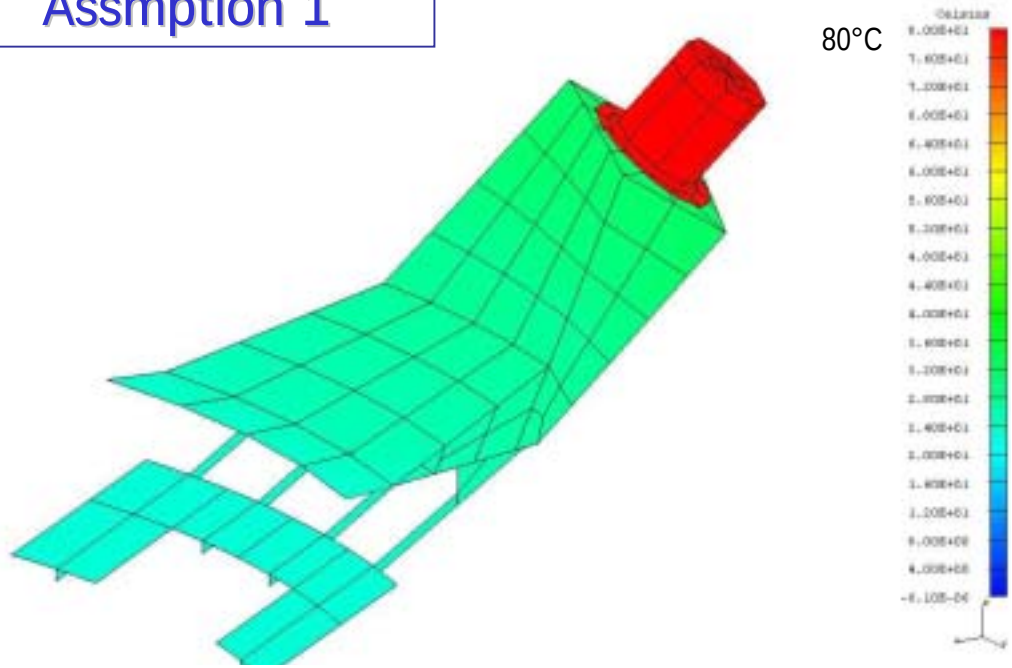

APPLIED THERMAL BOUNDARY CONDITION

80 °C applied at lens
22°C at Si Tracker Interface
15°C TTCS loop point
Thermal insulation between lens and ASTS

produce safety condition for the structure stability but could be critical for the lens

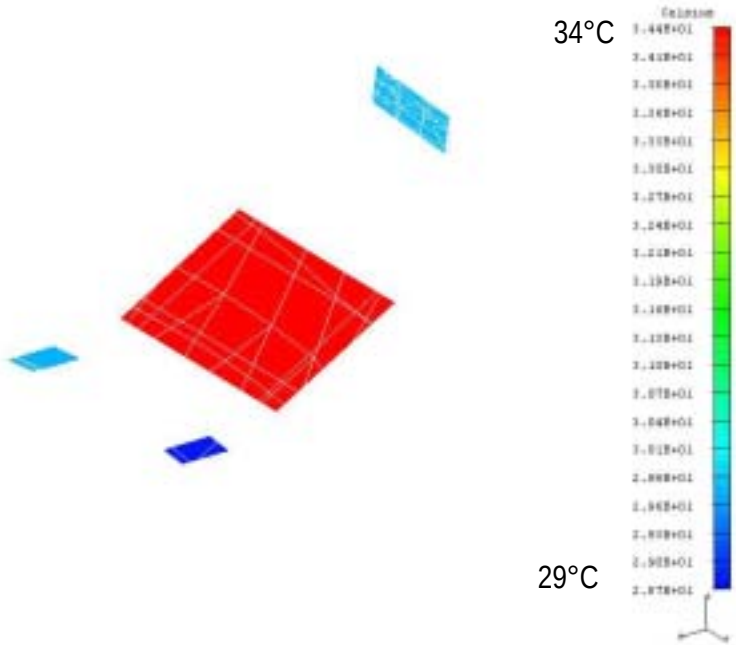

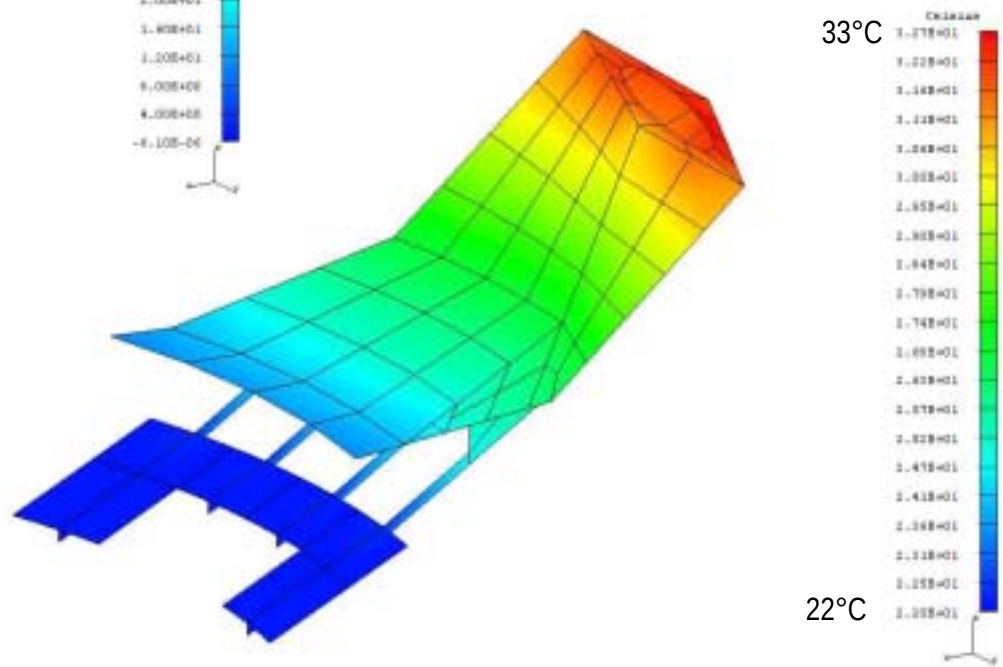

Assumption 2

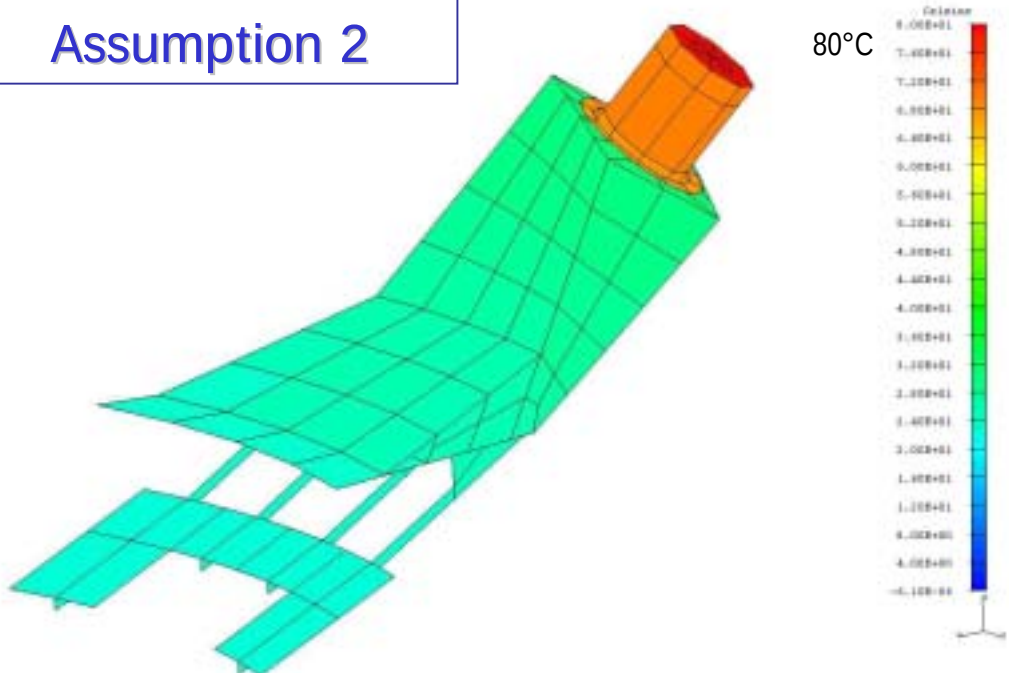

APPLIED THERMAL BOUNDARY CONDITION

80 °C at filter (front of the lens)
22°C at Si Tracker Mechanical Interfaces
15°C TTCS loop point
Thermal insulation between lens and ASTS
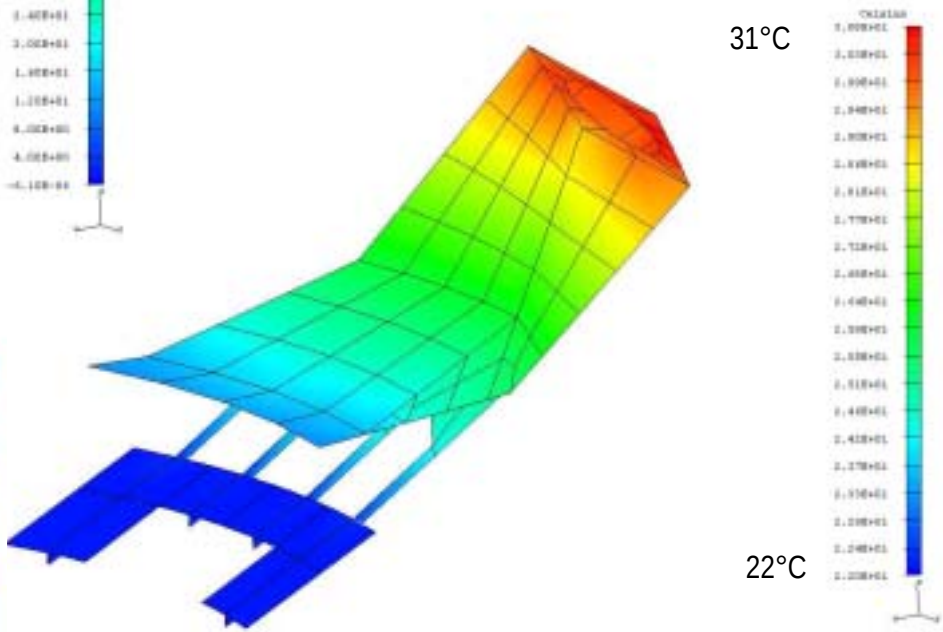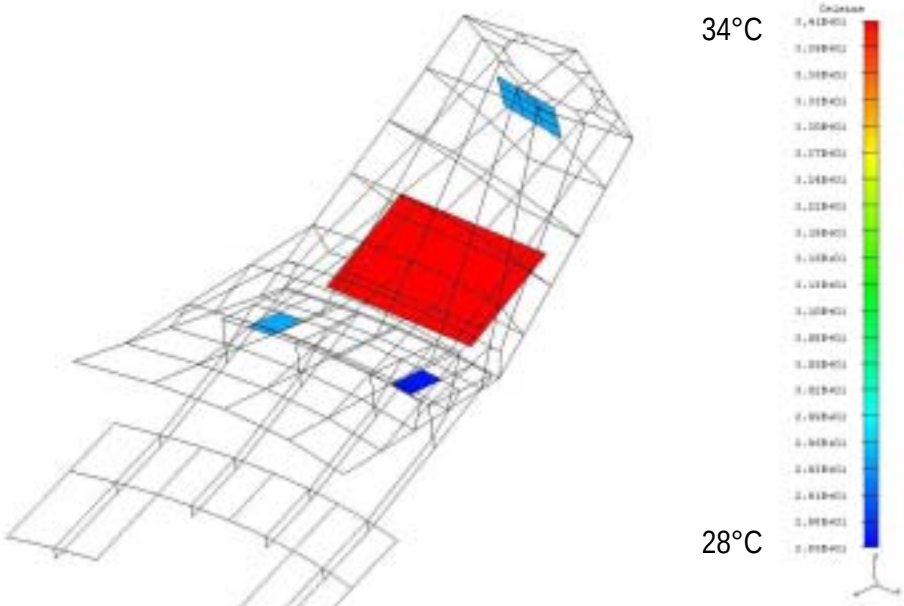
Lens temperature increases to values that could be critical for its best resolution