5. AMS-02 FLIGHT HARDWARE DESCRIPTION

5.1 CRYOGENIC SUPERCONDUCTING MAGNET (CRYOMAG)

The Cryogenic Superconducting Magnet, or Cryomagnet, is at the heart of the AMS-02 experiment. Trajectories of incoming particles are bent by the magnetic field. The Silicon tracker detects this trajectory, which allows AMS-02 to identify the magnitude and sign of the particles' electrical charge. The magnet has a bending power of 0.86 Tm^2, which combined with the spatial resolution of the tracker allows measurements of particles extending into the multi-TeV energy range. The high field strength of the Cryomagnet is possible through the use of superconductors that are chilled by a superfluid helium Cryosystem serving as a heat sink operating at 4 K or below.

Most of the Cryomagnet and related special test equipment has been developed and manufactured by Eidgenossische Technische Hochschule (ETH) in Zurich through a sub-contract with Space Cryomagnetics, Limited (SCL) in Culham, England and Hans Bieri Engineering (HBE) in Winterthur, Switzerland. The magnet and its cryosystem are controlled through the Cryomagnet Avionics Box (CAB), which is being developed by Computadoras, Redes e Ingeniería SA (CRISA) in Madrid, Spain. The Vacuum Case (VC) was designed by Lockheed Martin and was built at the Standard Tool and Die Company (STADCO) in Los Angeles. The entire system is currently estimated to weigh 7050 lbs (3198 Kg).

5.1.1 Magnetic Coils

The magnet, shown in Figure 5.1.1-1, consists of 14 coils. The primary component of the field is created by the two large dipole coils. The twelve racetrack coils further shape the field, raising the strength within the bore of the magnet to 8600 G while minimizing the stray field external to the VC. The external field has a maximum value of 2000 G at the outer surface of the vacuum case and drops rapidly as distance increases away from the center of the AMS-02. Figure 5.1.1-2 shows the overall strength of the field at various radii from the geometric center of the magnet. The field in the primary measurement volume and the fringe field will be completely mapped as part of the magnet functional testing.

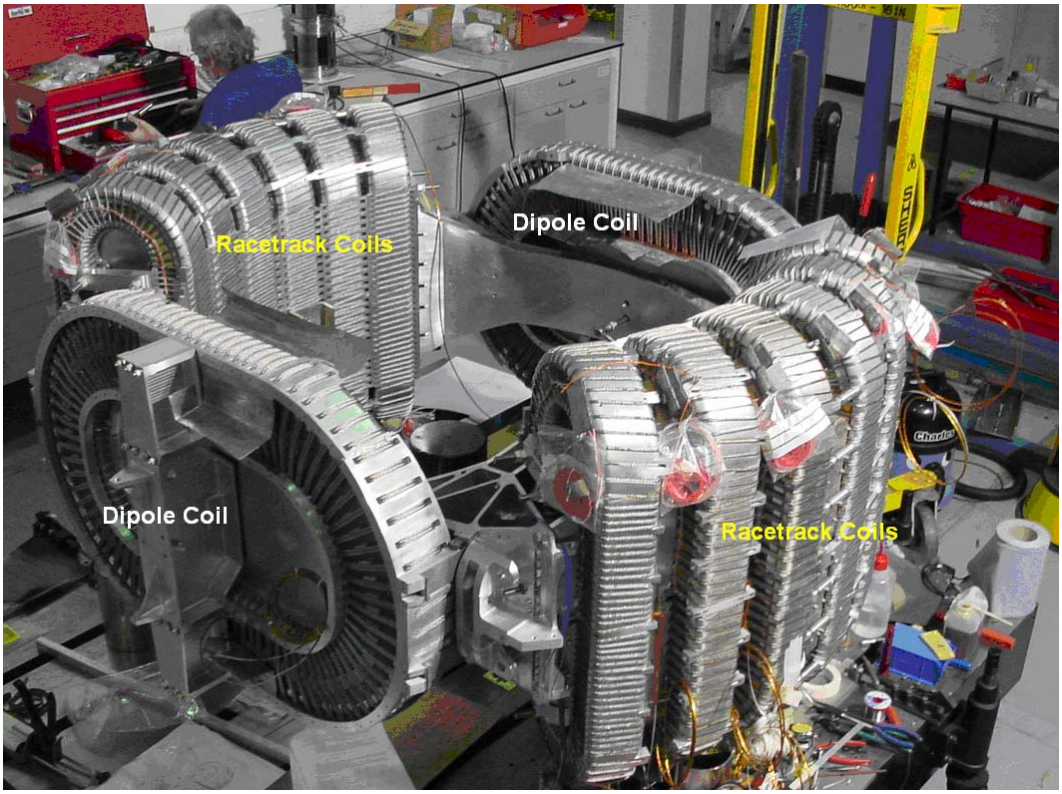

Figure 5.1.1-1 Magnet Coils

Contoured surfaces defining where the AMS-02 magnet field reached threshold values of 35G, 10G, and 6G were provided to the MAGIK team for their use in assessing all nearby ISS hardware which could be susceptible to magnetic interference. This analytic model of the field will be correlated to the actual measurements taken of the flight magnet. In all cases, the AMS-02 magnetic field was shown to be within acceptable operational limits would not interfere with the proper operation of any equipment located within the field. MAGIK also assessed the field strength in all EVA translation paths along the S3 truss using the Mobile Transporter. Once again, the field was found to be within acceptable limits and would not present a hazard to astronauts. The final MAGIK assessment was a study of field strength in the EVA translation paths on the AMS-02 structure itself. In this case, field strengths were high enough to affect some equipment. To prevent any hazard to the crew, the magnet will be required to be discharged and powered off during all EVA operations on the AMS-02 itself.

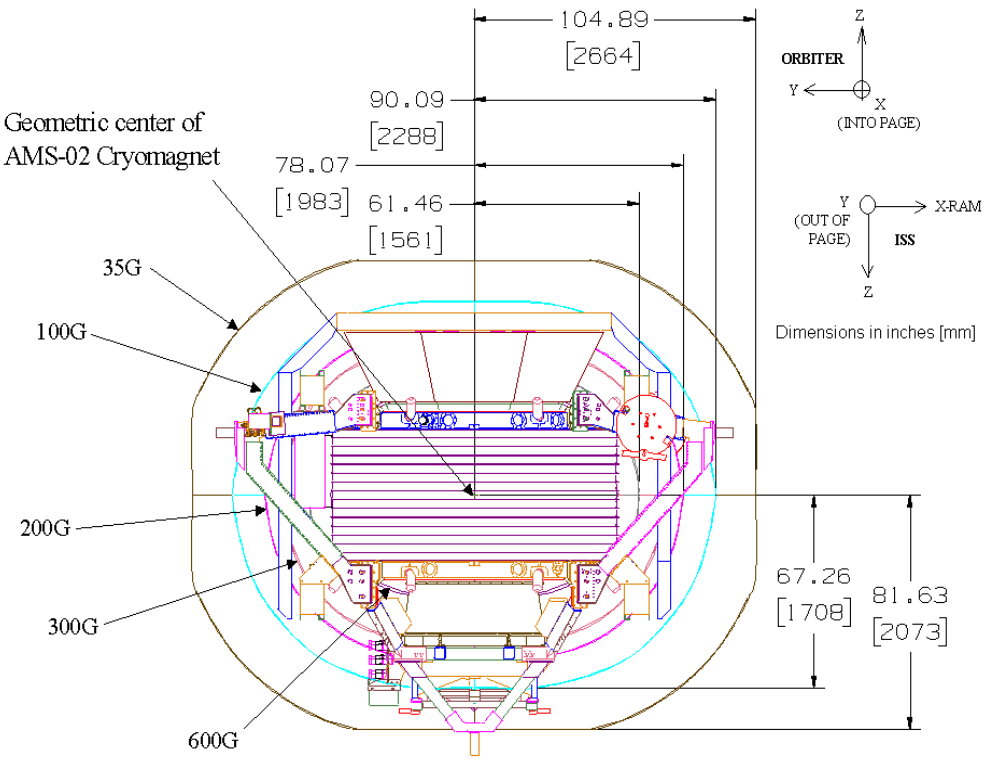

Figure 5.1.1-2 External Magnetic Field

The overall magnetic field will interact with the Earth's magnetic field and create a constant torque input to the station. The ISS Guidance, Navigation and Control (GN&C) Team provided maximum magnetic dipole moment levels which would ensure that this torque would not be beyond the ability of the control moment gyroscopes (CMGs) to control. Analysis has shown that the field generated by AMS-02 is five times less than the CMG limit provided to AMS-02 to meet. The magnetic field mapping of the flight magnet mentioned above will verify this prediction.

Figure 5.1.1-3 shows a cross section of the wire used in the coils. This wire was originally developed at ETH for the AMS-02 and has quickly become the standard for particle physics detector magnets. The superconducting element is NbTi filaments embedded in a 0.76 mm diameter copper matrix. This is then encased in a 2.0 mm x 1.5 mm square sheath of high-purity Al. The wire will be superconducting if the overall

temperature is kept below 4 K. To generate the required field of 8600 G, the AMS-02 magnet will run with a nominal current of 459.5 A.

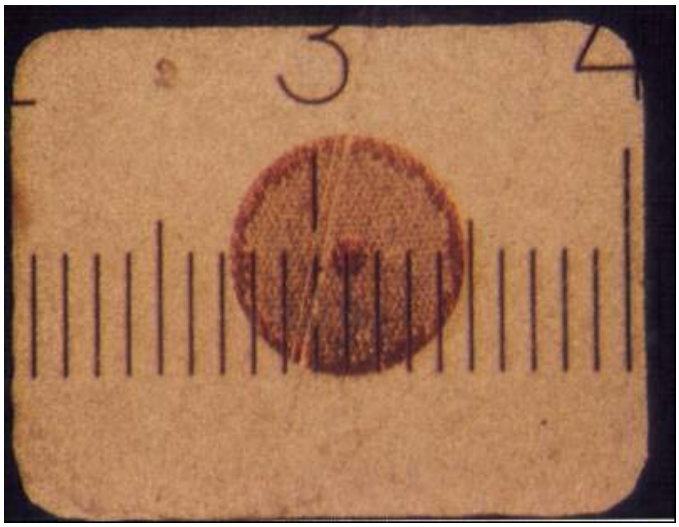

Figure 5.1.1-3 Superconducting Wire Cross Section

If the local temperature of a given section of wire rises above 4K or sees excessive strains, that section will no longer superconduct and will develop a finite resistance. This loss of superconductivity is known as a "quench." The energy stored in the magnet would immediately begin dissipating as heat in the resistive area. At nominal operating current, the AMS-02 contains 5.15 MJ of magnetic energy. NbTi is a poor thermal conductor, so uncontrolled dissipation of this energy would cause a massive temperature spike at the location of the quench and quickly burn through the wire, rendering the magnet useless. This is the reason for the thermally conductive Al layer in the AMS-02 wire. This sheath quickly conducts heat away from the site of the quench and spreads the energy over the entire coil. Use of this type of wire in many large-scale research magnets has demonstrated that peak temperatures seen during quenches are not hazardous to the magnet.

While this construction is sufficient to prevent all safety hazards, dissipation of 5.15 MJ even throughout an entire coil could generate enough thermal stresses to deform it and adversely affect future performance of that coil. To prevent this, AMS-02 has a quench detection system which is constantly monitoring the magnetic field. If a quench is detected in one coil, the system uses a series of heaters attached to each coil to force a

controlled quench in all the others. This ensures that the energy is dissipated evenly throughout the magnet and no single coil sees a major heat load and associated thermal stresses. This system will undergo multiple functional tests on the ground to verify that it can detect a quench and shut down the entire system evenly. (The avionics and control system associated with this cryomagnet self-protection system are discussed in more detail in Section 5.12, AMS Electronics.)

A second potential issue associated with quenching occurs in systems with multiple coils. A quench in a single coil and the collapse of its associated magnetic field will generate increased currents and field in any coil coupled to it through mutual inductance. This additional magnetic load can overstress the other coil. Additionally, the shifting shape of the overall magnetic field could expand the 35G envelope mentioned above to envelop susceptible ISS hardware. The quench detection system is designed to detect the onset of quench rapidly enough to shut all the coils down simultaneously. However, even if this system fails to function, AMS-02 avoids this effect by having all the coils linked in series. Loss of current in one coil will thus lead to an identical loss of current in the other coils and the magnetic field will ramp down evenly.

5.1.2 Structural Support

Each coil is wrapped around a structural support made of Al 6061, which keeps the coil in its elliptical shape. The large racetrack end frames seen in Figure 5.1.1-1, also made of Al 6061, hold the coils in their proper relative positions and resists the magnetic forces generated when the magnet is active. These magnetic forces are on the order of 250 tons and are much larger than any other loads the magnet will see during either flight or ground operations. Since the magnet will be activated on the ground multiple times for functional testing, the flight unit will have been shown by demonstration to survive the maximum expected load conditions without deformation or damage.

The magnet is attached to the Vacuum Case (VC) by sixteen support straps as shown in Figure 5.1.2-1. Each strap attaches to one of the VC support rings and a clevis at the corner of the racetrack end fittings. The design prevents the high magnetic operational

loads from being transmitted back to the rest of the structure and the thermal loads of the rest of the structure from being transmitted to the coils.

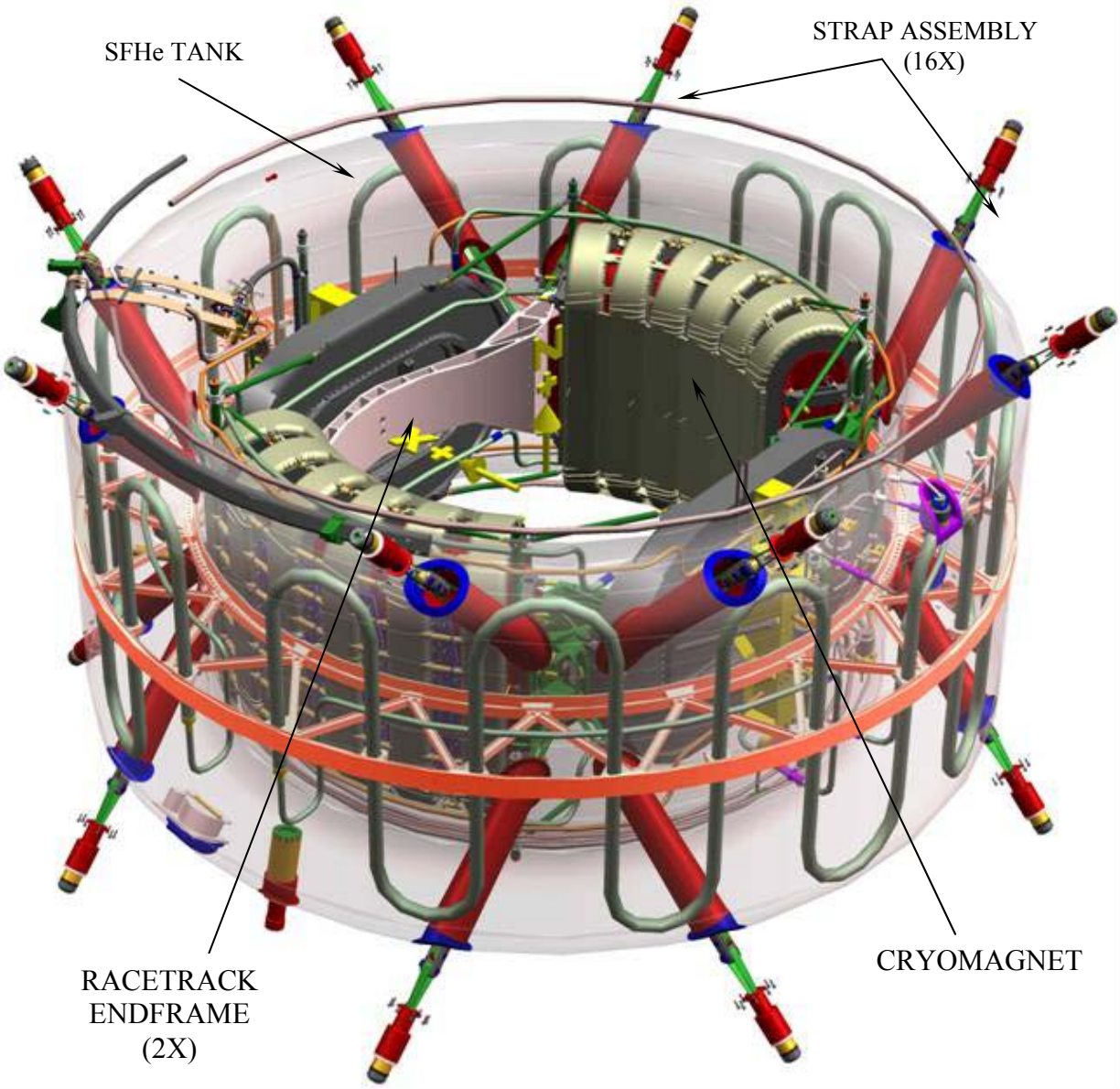

Figure 5.1.2-1 Cryomagnet, Helium Tank, and Support Straps

The challenge of the strap design was conflicting requirements. On the one hand, the system is required to resist the inertial loads of the magnet assembly during launch and landing events and prevent any contact with the inner surface of the VC. This demands a system which is both stiff and strong. On the other hand, these support straps also serve as the primary heat path into the system, so the thermal flux through the straps must be

kept to an absolute minimum. This demands a system which is long and slender. The strap support system developed by SCL is capable of meeting both requirements.

The basic layout of each strap assembly is shown in Figure 5.1.2-2. Figure 5.1.2-3 shows the four component bands that make up each assembly. Each band is made up of a high-strength fiber composite, with the specific material of each band chosen to provide minimal heat loss at the operational temperature it will see. At the coldest end, a carbon fiber band is used (the black band seen in Figures 5.1.2-3 and 5.1.2-4), while S2 fiberglass bands are used in the interior section and at the warm end (the white bands). These three bands provide sufficient stiffness for on-orbit load conditions, but are not sufficient to hold the magnet in its proper position under the launch and landing load environments. A fourth band, a Zylon fiber composite, is added to the interior sections to resist these loads (the brown band). This latter band is usually referred to as the launch/landing strap to distinguish it from the inner, on-orbit strap. This band has a passive thermal disconnect feature; when the strap assembly is not under high load, the strap does not have a thermal connection to the cold end of the system and thus its conduction does not contribute to the heat leak of the overall system.

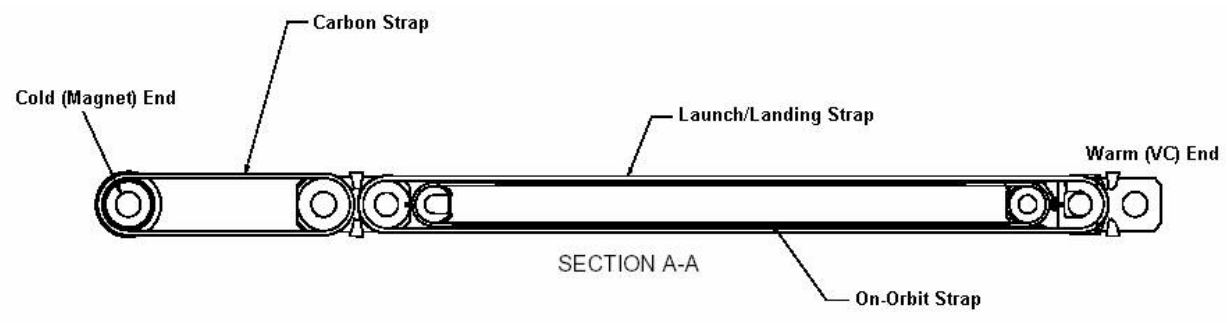

Figure 5.1.2-2 Strap Assembly Layout (Final Component Band not shown)

Figure 5.1.2-3 Strap Component Bands

Figure 5.1.2-4 Full Strap Assembly Under Test

The warm end of each strap assembly rests on a stack of Belleville washers inside a cylindrical fitting known as the "wineglass." The wineglass is in turn bolted to one of the support rings of the VC. An overall schematic of the fitting is shown in Figure 5.1.2-5. The Belleville washers are present in order to reduce the stiffness of the overall system and avoid causing long-term assembly stresses in the VC. This low-stiffness response will continue until the washer stack fully flattens and becomes for all practical purposes infinitely rigid.

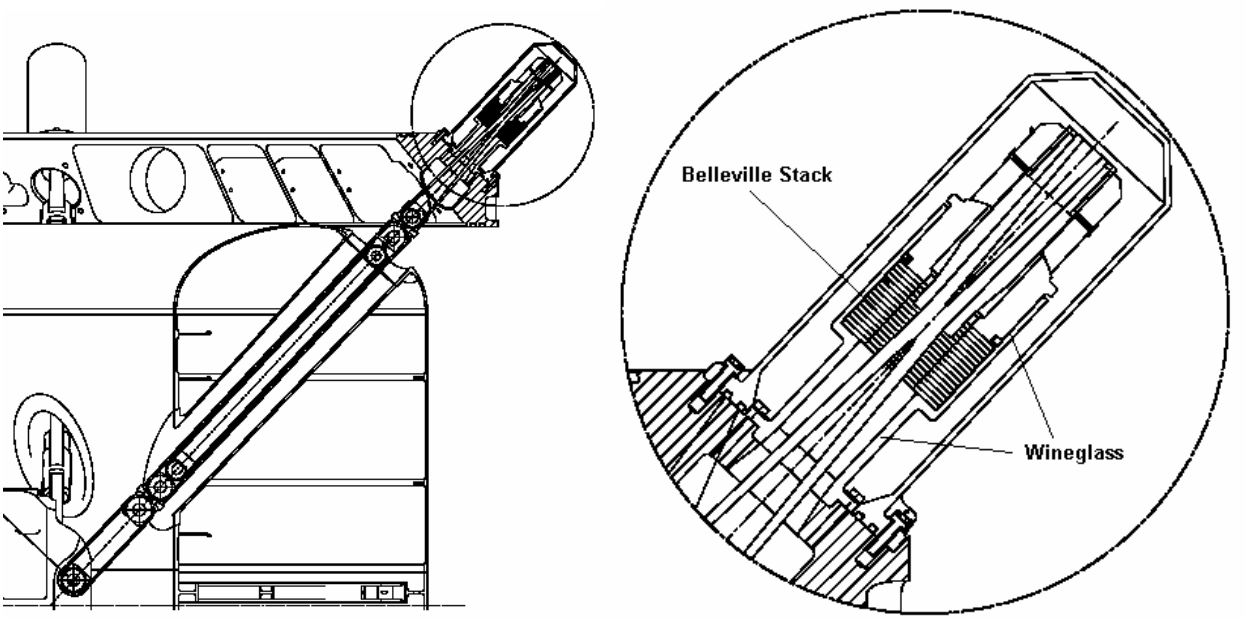

Figure 5.1.2-5 Wineglass Fitting

The radical stiffness change when the Belleville stack bottoms out and the stiffness change seen when the thermal disconnect closes and the launch/landing strap begins taking load means that the entire system has a highly nonlinear force-displacement relationship. Predicting, modeling, and validating the dynamic response of this system has been a significant effort for the project. The AMS-02 Structural Verification Plan describes the extensive series of tests and analysis used to accomplish this task. The test-correlated force-displacement curves for a single strap are shown in Figure 5.1.2-6. Each flight strap will be acceptance tested to 1.2 times the Maximum Expected Flight Load and the force-displacement response will be verified to be within the ICD limits shown in the figure.

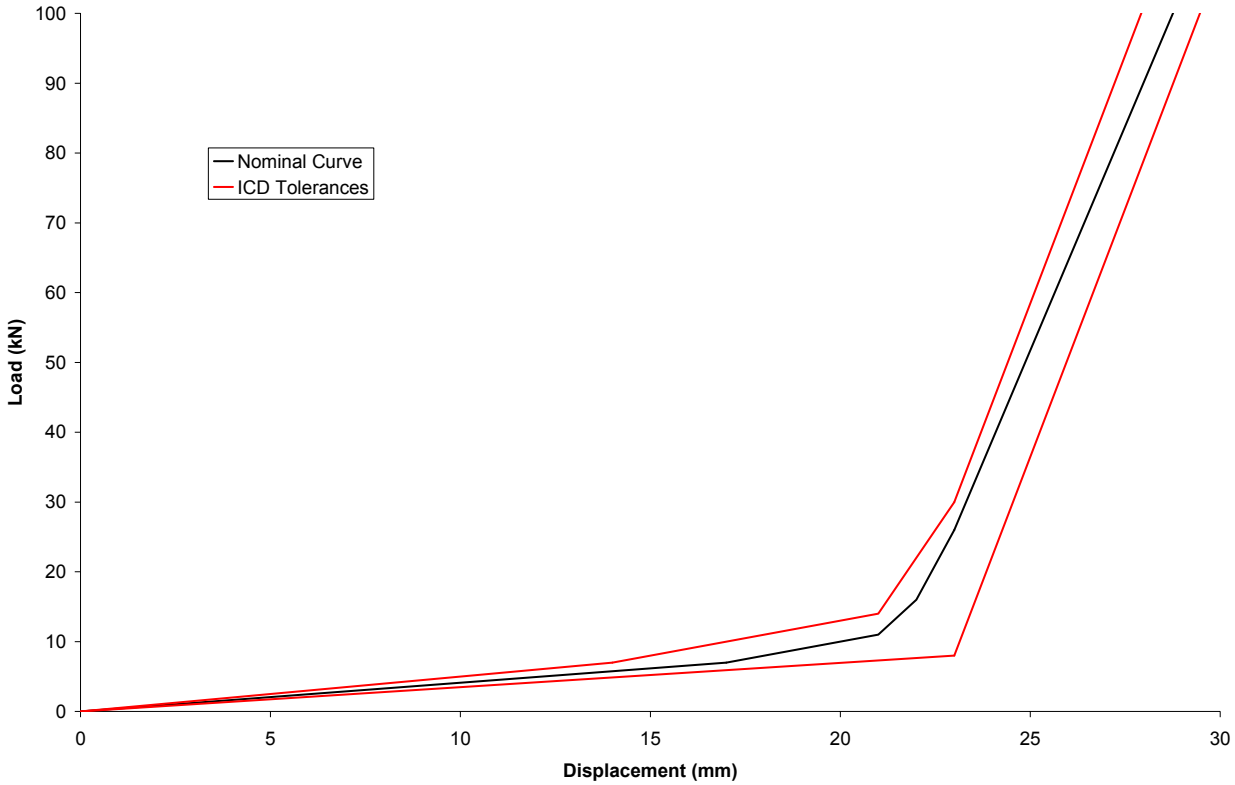

Figure 5.1.2-6 Overall Strap Assembly Test-Correlated Force-Displacement Relationship

5.1.3 Cryogenic System

As discussed in Section 5.1.1, the magnet coils must be kept at a temperature of 4 K or less in order to remain superconductive. Not only must the temperature be maintained for the entire mission, but the magnet must also be able to be recharged after an on-orbit quench without EVA support. SCL has met these requirements through a cryogenic system based on superfluid Helium. Helium becomes a superfluid when normal liquid helium is cooled below 2.17 K. In this state, it has three major advantages over normal liquid Helium:

1) It has a significantly higher density and higher specific latent heat than liquid Helium, allowing a given volume of superfluid to absorb significantly more heat than a similar volume of liquid helium.

2) Superfluid Helium has extremely high thermal conductivity, allowing the magnet to be cooled through a thermal bus rather than being in a cryogen bath.

3) Superfluid Helium can be pumped using Thermo-Mechanical Pump (TMP) technology. TMPs are actuated solely by heaters and have no moving parts. This makes them extremely reliable and well-suited for orbital use.

The AMS-02 cryogenic system schematic is shown in Figure 5.1.3-1. Heat is removed from the magnet coils through the Superfluid Cooling Loop, which then conducts the heat into the main Helium tank. This tank is at 1.8K and is the ultimate heat sink for the entire system. As the Helium slowly boils away, vapor is removed from the system and flows through a series of four vapor cooled shields operating between 1.8K and 60K which surround the magnet assembly. Small thermal connections run between these shields and the metallic fittings on the support straps to further reduce the heat leak into the main tank from the structural supports. The outermost vapor-cooled shield is thermally attached to four cryocoolers, which further reduce the overall temperature and slow the rate of helium loss. The helium is then released through a zero-thrust vent. During nominal operations, the maximum venting rate is 5 mg/s and does not present an over-pressurization hazard to the Orbiter. The following paragraphs cover each of these subsystems in greater detail.

All valves have been selected to have burst pressures in accordance with the requirements of NSTS 1700.7B. Additionally, all will be acceptance tested and shown to operate normally within the AMS-02 magnetic field. All external GSE interfaces will either be 1) crimped and welded after use or 2) will have two valves in series which will be closed to prevent either helium venting or a breach of the dewar vacuum space. Burst disks use a circumferentially-scored, reverse bulking design which is considered single-fault tolerant based on the requirements in NSTS/ISS 18798B, letter TA-88-074. This was presented to the safety panel and accepted by them on 17 Jan 2003. As part of the qualification plan, multiple discs have been burst at cryogenic temperatures and all have operated normally without generation of debris.

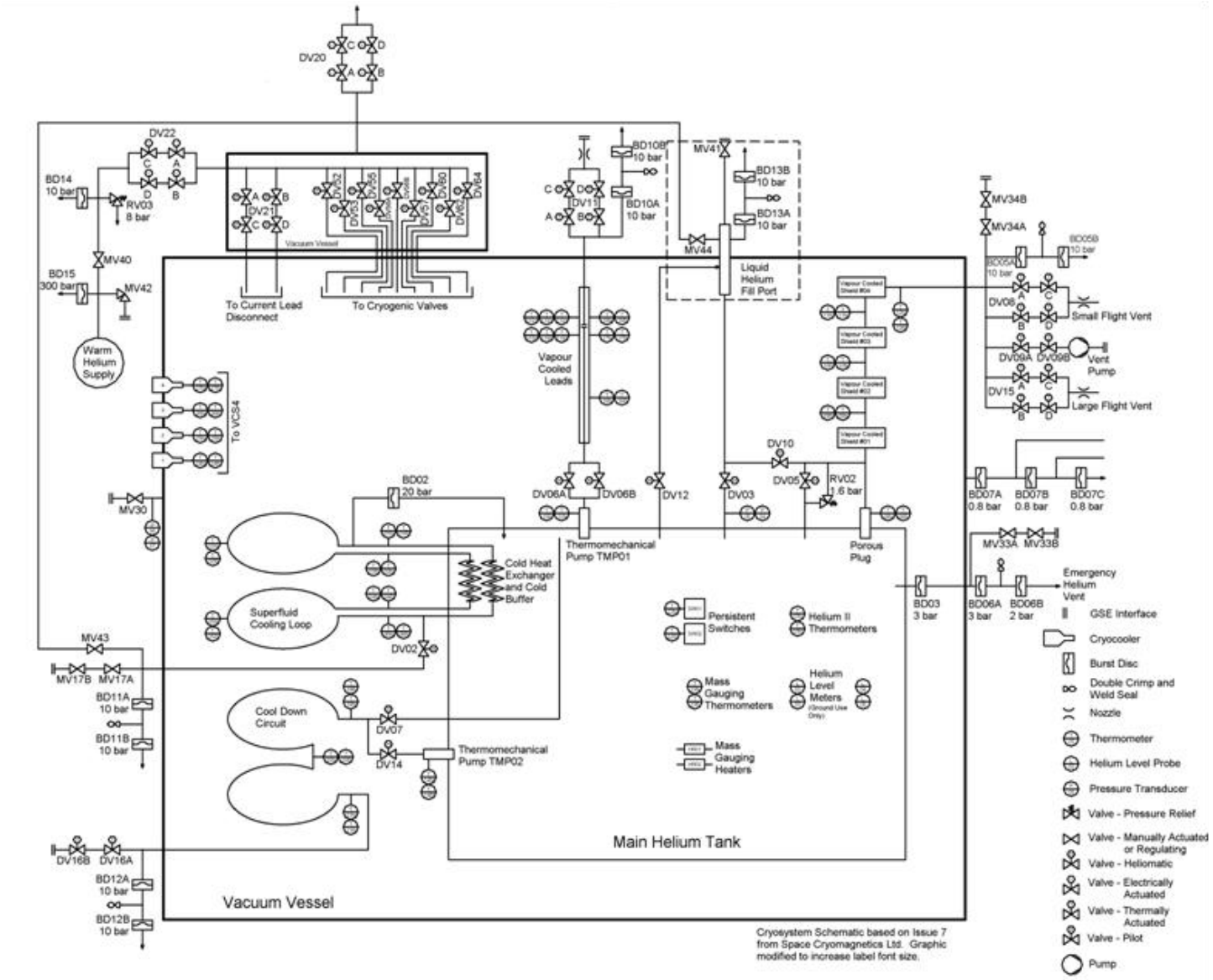

Figure 5.1.3-1 Cryogenic Process Diagram

5.1.3.1 Coil Cooling

Each magnet coil has two thermal shunts attached to the Superfluid Cooling Loop, which runs along the top and bottom of the magnet. The loop is a copper pipe filled with superfluid helium at 1 bar pressure. Heat in the coils is conducted through the shunt into the liquid inside the loop. The cooling loop in turn extends into the main Helium Tank where a serpentine heat exchanger (Figure 5.1.3.1-1) dissipates the heat into the superfluid helium.

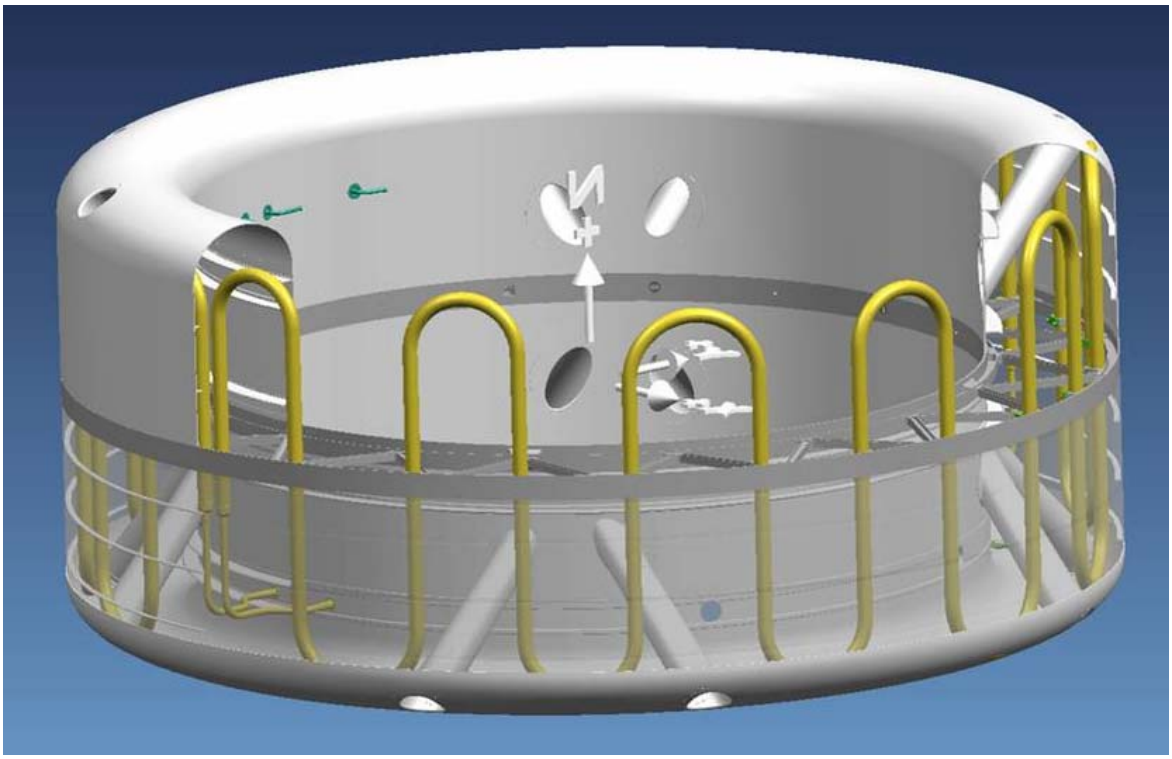

Figure 5.1.3.1-1 Heat Exchanger

Cooling the magnet by means of a thermal bus and external tank provides AMS-02 the ability to recover from a quench. A ground-based magnet typically resides in a helium bath. When a quench occurs, the large thermal loads transmit directly into the helium, which quickly boils and vents away. More helium must then be added to the bath to cool and restart the magnet. By storing the helium in an external tank, the heat from a quench can be bled off slowly and the overall helium loss in the system can be minimized. The cryomagnet self-protection system discussed in Section 5.1.1 prevents the temporary significant heat rise in the magnet from causing a hazardous situation.

The Superfluid Cooling Loop is filled on the ground through valve DV02 and MV17A and B, which are then closed on the ground and never reopened. This loop has been designed to a maximum design pressure of 20 bar and is protected from over-pressurization by the burst disk BD02. Nominal operating pressure is 1.85 bar. This disk would vent the loop into the main helium tank, not externally, and thus presents no safety hazard. For this reason, only one burst disk has been used.

5.1.3.2 Helium Tank

The main Helium Tank is a 2500 liter toroidal vessel which contains the bulk of the cryogen used by AMS-02. As shown in Figures 5.1.3.2-1 and 5.1.3.2.-2, the tank consists of a central support ring attached to two rib-stiffened cylinders. The inner cylinder has a radius of 0.96 meters and the outer cylinder has a radius of 1.29 meters. The tank is made up of Al 5083 forgings and all interfaces are welded. The construction technique used to fabricate the tank optimizes the ability of the tank to withstand helium permeation of the aluminum by careful control of the material “grain” orientation.

Sixteen through-tubes are included in the tank to allow the strap assemblies to pass. Structural analysis has shown that these tubes are wide enough to prevent the strap from contacting the side of the tank. The remainder of the ports seen in the figure are thermal and electrical interfaces with components inside the tank or ports designed to support filling and venting operations. The tank itself has been designed to a maximum positive pressure of 3 bar and a maximum negative pressure of 1 bar. The maximum pressure is ensured through three burst disks, two set to 3 bar (BD03 and BD06A) and one set to 2 bar (BD06).

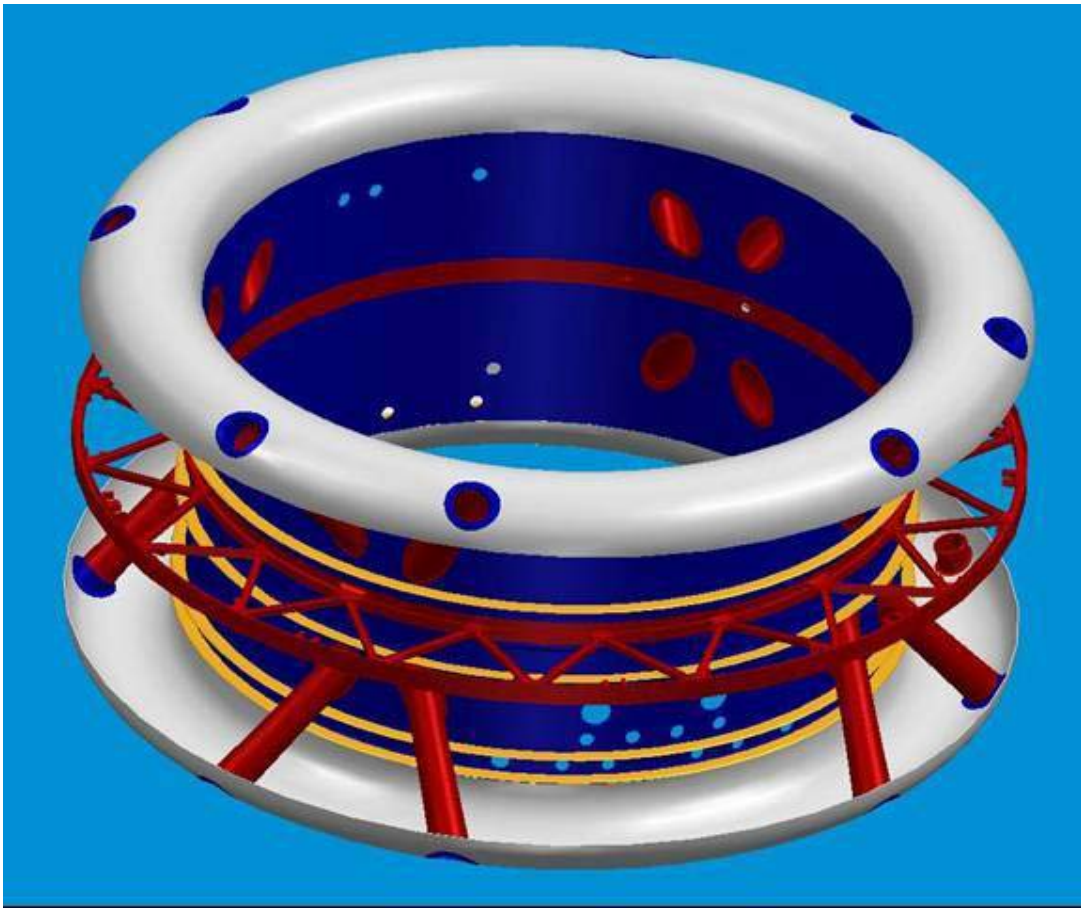

Figure 5.1.3.2-1 Helium Tank (Outer Cylinder not shown)

Helium leakage from the tank in significant quantities could pose an over-pressurization hazard to the Shuttle. The project has therefore developed a special testing program for all welded interfaces which is described in the AMS-02 Weld Control Plan (JSC 29779). When completed, the entire tank will undergo leak checks using both liquid helium and superfluid helium. The superfluid helium has zero viscosity, and many tanks which are leak tight for liquid helium are not leak tight for superfluid helium. In order to fully qualify the AMS-02 tank, SCL has built a dedicated leak testing unit which can not only cool the system to superfluid temperatures, but is also capable of rotating the tank about its central axis, ensuring that all surfaces of the tank will be wetted during the leak test.

Figure 5.1.3.2-2 Helium Tank Lower Half

5.1.3.3 Vapor Cooled Shields

As heat is dissipated into the main Helium Tank, the vapor generated is separated from the liquid by means of a porous plug. This vapor then flows into small tubes inside a series of four Vapor Cooled Shields (VCS). These shields surround the magnet and helium tank assembly and are connected via small thermal shunts to the metallic portions

of the support strap assemblies. As mentioned earlier, these intermediate heat sinks reduce the overall heat leak into the He tank itself and greatly increase the overall endurance of the system. The shields themselves are thin foils of nearly pure Al. One shield has a carbon fiber honeycomb structure underlying them for additional structural support. As with the Helium Tank, each shield has sixteen holes to allow passage of the support straps. Figure 5.1.3.3-1 shows the shield structural support.

Figure 5.1.3.3-1 Vapor Cooled Shield Structural Support

5.1.3.4 Cryocoolers

The final stage of the magnet thermal control system is four Stirling-cycle cryocoolers which attach to the outermost VCS. Together they remove approximately 12W of heat from the system. This additional temperature drop has been calculated to reduce Helium consumption by a factor of four. After this final cooling stage, the helium gas is allowed to vent to space from a zero-thrust vent aligned with the ISS Y-axis. This vent will be shown not to impinge on AMS-02 or ISS hardware, nor into any potential EVA path.

The coolers themselves are based on the Sunpower design and have been analyzed and verified by the Cryogenics and Fluids Branch at the Goddard Space Flight Center (GSFC). This heat is then conducted to a loop heat pipe (LHP) which then conducts the heat to the zenith radiator. (The LHP/Zenith Radiator system is discussed in more detail in the Section 5.13.1.3, Zenith Radiator and does not interface directly with the cryogenic system.) Flight-like coolers have undergone a full acceptance testing cycle to demonstrate structural strength and proper workmanship. A qualification cooler has also undergone a fatigue test to demonstrate the system lifetime.

5.1.3.5 Cryosystem Operations

In the payload bay prior to launch, the system will be in its standard ground steady-state. The Superfluid Cooling Loop will be controlling the magnet temperature and conducting small amounts of heat into the main tank. The small amount of helium vapor generated will leave the tank through the porous plug and travel through the VCS circuit described above. The vent pump outboard of the valves at DV09 continually pumps the excess helium vapor from the VCS circuit and releases it to the atmosphere. The valve groups DV15 will remain closed, ensuring that all helium leaves through the vent pump and that no air enters the system.

At nine minutes prior to launch, the pump and cryocoolers will be switched off and valves DV09A and DV09B will be closed. The system will now be completely sealed, causing the overall pressure to slowly increase. (This effect has been considered in the MDP calculation for all pressure systems.) The system will have been actively monitored

on the ground prior to this to ensure that the vacuum space has not been breached and the Helium Tank remains thermally isolated from the environment.

During launch, when the exterior pressure has dropped below the main tank pressure, the valves at DV15 are opened in order to allow the tank to begin venting through the flight vent and relieve the added pressure. This command is controlled by both a barometric switch and a Backup Flight System (BFS) computer. It is desirable to open this valve while the helium is experiencing the acceleration forces that put vapor and not fluid against the porous plug. Once the Shuttle has reached orbit and the large flight vent is open to vacuum, the cryocoolers will be reactivated and the system pressure will begin dropping to its orbital equilibrium value. At some stage during the mission, the valves marked DV11 and DV16 will be opened in order to release any residual gases trapped in the vapor-cooled lead lines and the cool-down circuit, respectively.

In the case of a launch abort, no action would be required to keep AMS-02 from creating a safety hazard. If the flight vent remains closed, eventually the helium tank would reach 3 bar pressure and burst disks BD03, BD06A, and BD06B would burst. This would not happen for several hours after landing, and the flow rate has been assessed and does not pose a hazard to the orbiter. This venting can be avoided through reactivation of the vent pump. If the valve remains open, the venting would be consistent with the pre-launch venting conditions and pose no threat to the Orbiter.

The magnet charging operations are discussed in great detail in the Section 5.12, AMS Electronics, but it should be noted here that current leads which are capable of carrying the 459.5A nominal magnet current would be an immense heat load on the system unless they are cooled to cryogenic temperatures. SCL has solved this problem through development of hollow current leads through which superfluid helium from the main tank can be pumped to bring the leads down to the temperature of the main tank. This is accomplished by opening the valves marked DV06 and heating thermo-mechanical pump TMP01, causing the helium to flow into the leads themselves. Once they are cooled to the appropriate temperature, a mechanical switch closes connecting the leads to the magnet circuit and charging begins. Once the magnet has been charged and is

operational, the leads are disconnected. TMP01 is then stopped and the DV06 valves are closed. The valves marked DV11 are then opened and the remaining helium vapor is allowed to vent to vacuum through a small zero-thrust vent.

Once the magnet has been charged and the current leads disconnected, the system is in its operational state and nominally will require no further action. All valves are closed and helium vapor in the tank is being released through the porous plug, flowing through the vapor cooled shields, and then slowly venting to vacuum.

If the magnet does quench from full field at some point during the mission, the average coil temperature will rise to about 65K. This will also cause a pressure rise in the superfluid cooling loop, but it will not exceed the system maximum design pressure of 20 bar. The pressure rise in the SFHe tank will be negligible. To re-cool the coils, valve DV14 is opened and thermo-mechanical pump TMP02 is activated to pump superfluid helium from the main tank into the cool-down circuit. The combination of this loop with the nominal cooling loop will bring the coils back to superconducting temperatures within two hours. It should be noted that if DV14 fails to operate, the system can still be brought back to operational temperatures with just the primary loop – it will simply take longer and use more helium since the primary loop will be overheated at this point (but not exceeding the system MDP).

5.1.4 Vacuum Case (VC)

The design and analysis for the Cryomagnet Vacuum Case (VC) is provided by the Engineering & Sciences Contract Group (ESCG) in Houston and fabrication is being performed by Standard Tool & Die Company (STADCO) in Los Angeles with oversight by the ESC Group. The VC serves a dual purpose; it is a primary structural support that works in conjunction with the USS-02 to form the foundation structure of the AMS-02 and serves as a vacuum jacket for the superfluid helium tank and superconducting magnet suspended inside by 16 support straps. The Vacuum Case assembly and cross section is shown in Figure 5.1.4-1.

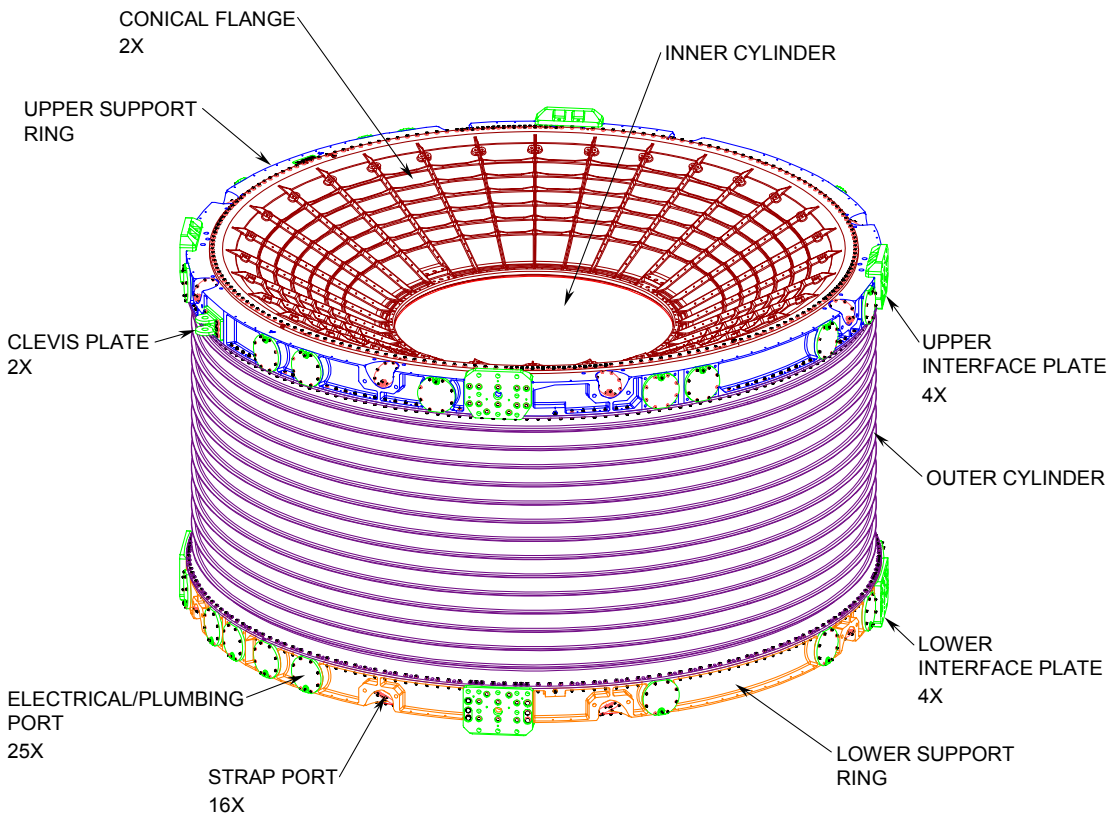

Figure 5.1.4-1 Vacuum Case

5.1.4.1 Vacuum Case Structural Components

The main structural components of the VC are described in the following paragraphs.

5.1.4.1.1 Conical Flanges

The Upper and Lower Conical Flanges are made of spin formed Al 2219-T62. The Conical Flanges start as an annealed plate (T0) and spin formed to rough shape using two dies. They are then solution heat treated and quenched (T42) followed by aging to final condition (T62) to complete a spin form blank One blank was cut up through the entire thickness along the entire cone for tensile test samples to qualify this process. The remaining blanks are qualified by tensile samples along the inner and outer diameters. All blanks must meet the design requirements for Aluminum 2219-T62 in MIL-HDBK-5 and all samples are tested per ASTM B557. The blanks are then machined to final dimensions. The recessed O-ring grooves, which help prevent inadvertent damage, are machined to a 16 micro-inch finish. All other surfaces are machined to the standard 125

or better micro-inch finish. All exterior surfaces, with the exception of sealing surfaces and weld area, are anodized. All interior surfaces, sealing surfaces, and O-ring grooves, are chemical filmed to prevent corrosion. The chemical film process does not affect the sealing capability of the O-ring. The weld joint area is kept bare for welding purposes. It is coated with a maskantcoating to prevent corrosion and keep the aluminum clean prior to welding.

5.1.4.1.2 Support Rings

The Upper and Lower Support Rings are made of a rolled ring forged Al 7050-T7451. The forgings are qualified to AMS 4108 and inspected per NASA/JSC PRC-6504, Class A. In addition to this qualification, additional tensile samples are removed from both ends of the forging and tested per ASTM B557. The forging is then machined to final dimensions. The Support Rings contain all of the ports for the magnet support straps along with ports for electrical/plumbing feed-throughs and cyrocooler interfaces. The dove-tail O-ring grooves, which prevent the O-ring from falling out during VC assembly, are machined to a 16 micro-inch finish along with the sealing faces of the feed thru ports. All other surfaces are machined to the standard 125 or better micro-inch finish. All exterior surfaces, with the exception of sealing surfaces, are anodized. All interior surfaces, sealing surfaces, and O-ring grooves, are chemical filmed to prevent corrosion. The chemical film process does not affect the sealing capability of the O-ring.

5.1.4.1.3 Outer Cylinder

The Outer Cylinder is milled from a rolled ring forging of Al 7050-T7451. The forgings are qualified to AMS 4108 and inspected per NASA/JSC PRC-6504, Class A. In addition to this qualification, additional tensile samples are removed from both ends of the forging and tested per ASTM B557. The forging has been machined to provide reinforcing ribs along the height of the cylinder. The ribs are spaced approximately 3.0 inches apart and are .10 inch thick. The recessed O-ring grooves, which help prevent inadvertent damage, are machined to a 16 micro-inch finish. All other surfaces are machined to the standard 125 or better micro-inch finish. All exterior surfaces, with the exception of sealing surfaces, are anodized. All interior surfaces, sealing surfaces, and

O-ring grooves, are chemical filmed to prevent corrosion. The chemical film process does not affect the sealing capability of the O-ring.

5.1.4.1.4 Inner Cylinder

Inner Cylinder (Al 2219-T852 Rolled Ring Forging). The forgings are qualified to AMS 4108 and inspected per NASA/JSC PRC-6504, Class A. In addition to this qualification, additional tensile samples are removed from both ends of the forging and tested per ASTM B557. All exterior surfaces, with the exception of the weld area, are anodized. All interior surfaces are chemical filmed to prevent corrosion. The weld joint area is kept bare for welding purposes. It is coated with a peelable maskantto prevent corrosion and keep the aluminum clean prior to welding. **(Leland's comment: There are "films and peelable coatings" mentioned in the text but it is unclear if all these are the same or different.)** **(Phil's comment: The film I assume is in reference to chemical filmed. This is a standard process used throughout the aerospace community for corrosion protection. It does not need to be explained here. The peelable coating is just that. A coating that can be peeled off when the part is ready for use.)**

5.1.4.1.5 Clevis Plates

The Clevis Plates are fabricated from CRES A286 and are used to attach the diagonal struts from the USS-02 to the Upper Support Ring

5.1.4.1.6 Interface Plates

The Upper and Lower Interface Plates are fabricated from Al 7050-T7451 plate and are the main interface with the USS-02 at 8 locations.

5.1.4.1.7 Feed Thru Cover Plates

The Feed Thru Port Cover Plates are fabricated from Al 6061-T651 plate. The Feed Thru Port Cover Plates protect the access ports during ground processing and for unused ports, during flight. Plates will be removed to allow for installation of necessary plumbing components and electrical feed-throughs **(Leland's comment: Section should be provided for the electrical connector mechanism for the cryosystem.)** (Phil's

comments: This should be covered in the magnet section, not here in the VC Section)

for the Cryomagnet System. Strap Port blank cover plates are used to protect the surfaces of the strap ports until the straps are installed. The rectangular O-ring grooves are machined to a 16 micro-inch finish. All other surfaces are machined to the standard 125 or better micro-inch finish. All exterior surfaces, with the exception of O-ring grooves, are anodized. All interior surfaces and O-ring grooves are chemical filmed to prevent corrosion. The chemical film process does not affect the sealing capability of the O-ring.

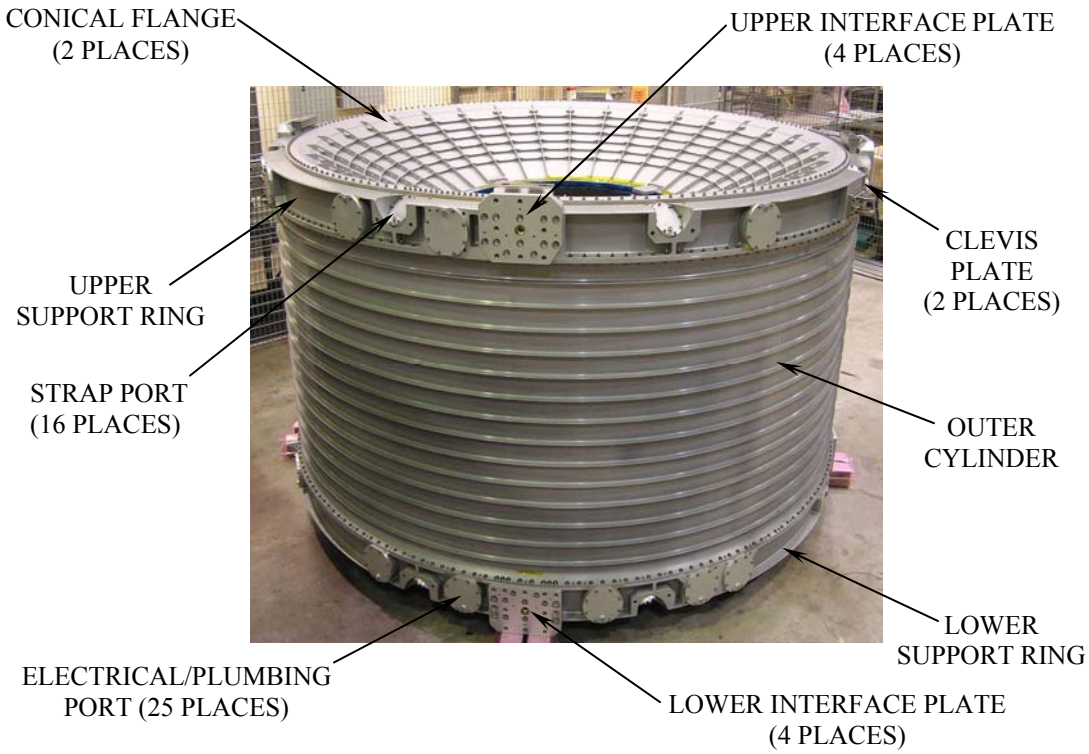

Figure 5.1.4.1-1 Vacuum Case Assembly

The weight of the VC is 1626 lbs (738 kg), which includes all of the Feed Thru and Strap Port blank cover plates. The Vacuum Case attaches to the USS-02 at the 8 Interface plates and the 2 Clevis Plates. Since the Vacuum Case is an integral part of the primary structure with the USS-02, a Structural Test Article (STA) was developed and fabricated at the same time as the Flight VC. The STA VC will be used for much of the AMS-02 structural testing. The Flight unit and the STA unit are identical.

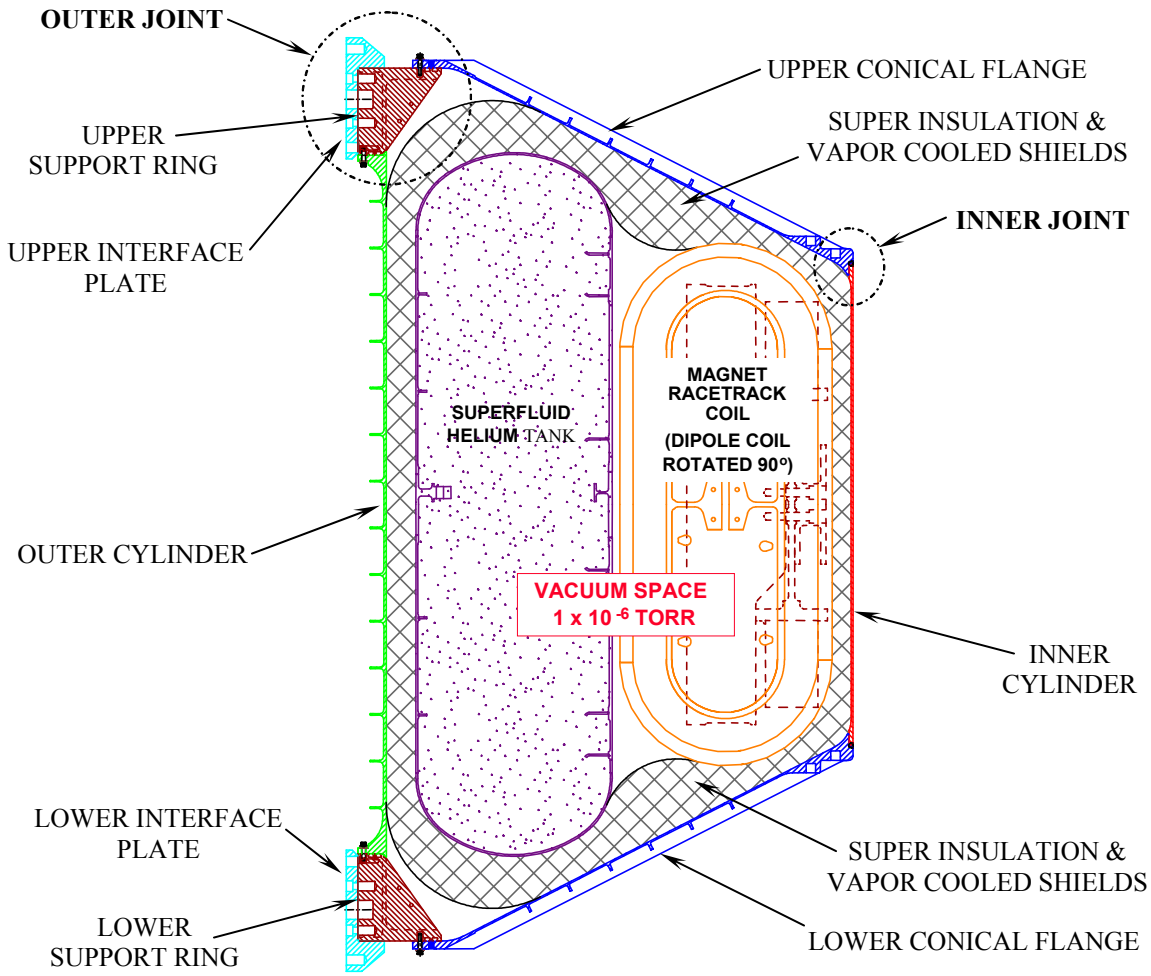

Figure 5.1.4.1-2 Vacuum Case Cross Section

5.1.4.2 Vacuum Case Assembly Details

The VC Inner Joint, which consists of the Upper or Lower Conical Flange and Inner Cylinder, is welded using a U-groove configuration on both ends (Figure 5.1.4.2-1). This design allows for 3 completed welds on this joint (the initial weld plus two contingencies).

The VC Outer Joint, which consists of the Upper or Lower Conical Flange to the Upper or Lower Support Ring and the Outer Cylinder to the Upper or Lower Support Ring, is bolted using 1/4 and 5/16 inch fasteners at each location (Figure 5.1.4.2-2). All fasteners meet the requirements of the JSC Fastener Integrity Testing Program, JSC 23642. The interface is sealed using a double O-ring configuration (Figure 5.1.4.2-3). The O-ring material is Viton and made from extruded cord stock that is joined at the seams by using

the Parker hot vulcanizing process. These O-rings are also coated with Dow Corning High Vacuum Grease prior to installation. Test ports are located between each O-ring so that each O-ring can be tested individually and verified. The test port will be closed out with a hex plug and sealed with a Viton O-ring.

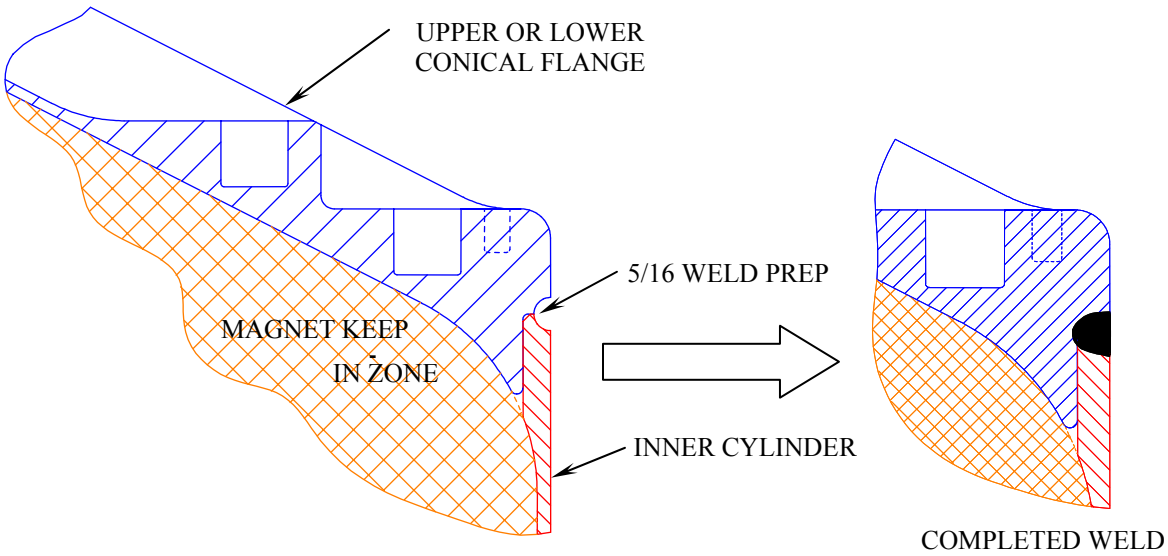

Figure 5.1.4.2-1 Inner Joint (Closeout Weld) Assembly Detail

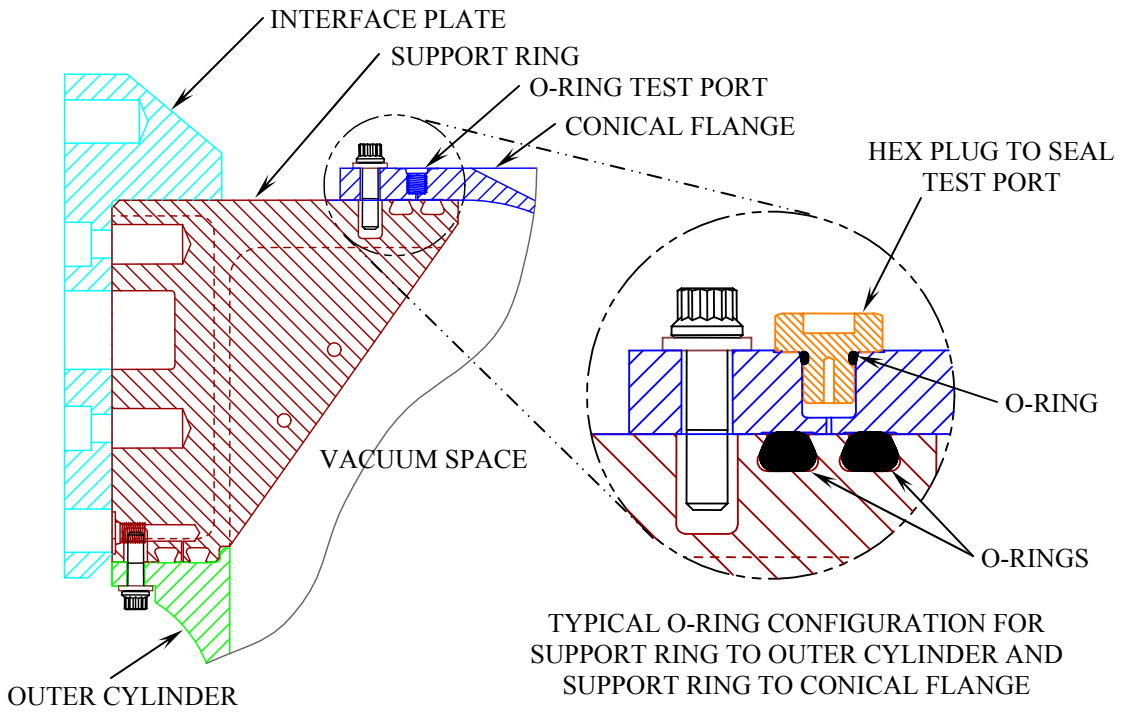

Figure 5.1.4.2-2 Outer Joint Assembly Detail

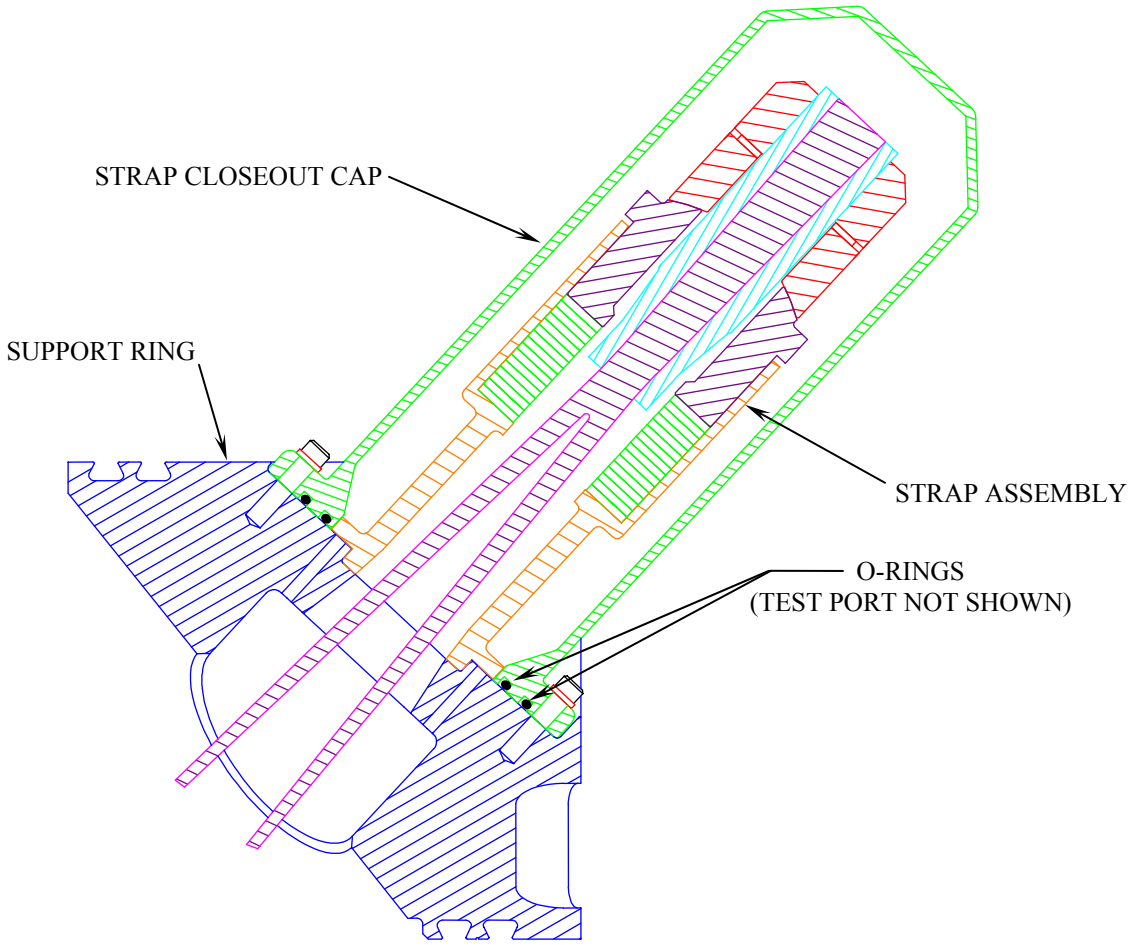

Figure 5.1.4.2-3 Strap Port Cross Section

5.1.4.3 Feed Thru Ports

There are 41 ports on the Vacuum Case. Sixteen ports are for the cryosystem support straps and 25 ports are for plumbing lines and servicing equipment, cryocoolers, burst disks, and electrical connections **(Leland's comment: A section should be provided for the electrical connector mechanism for the cryosystem.)** (Phil's comments: See comment above. This should be covered in the magnet section) (Figures 5.1.4.3-1 through 5.1.4.3-3). Double O-rings will also be used at each of these ports and a test port will also be incorporated between the O-rings so that each one can be tested individually. The O-ring material is Viton and is an off-the-shelf item. These O-rings are also coated with Dow Corning High Vacuum Grease prior to installation. The test port will be closed out with a hex plug and sealed with a Viton O-ring.

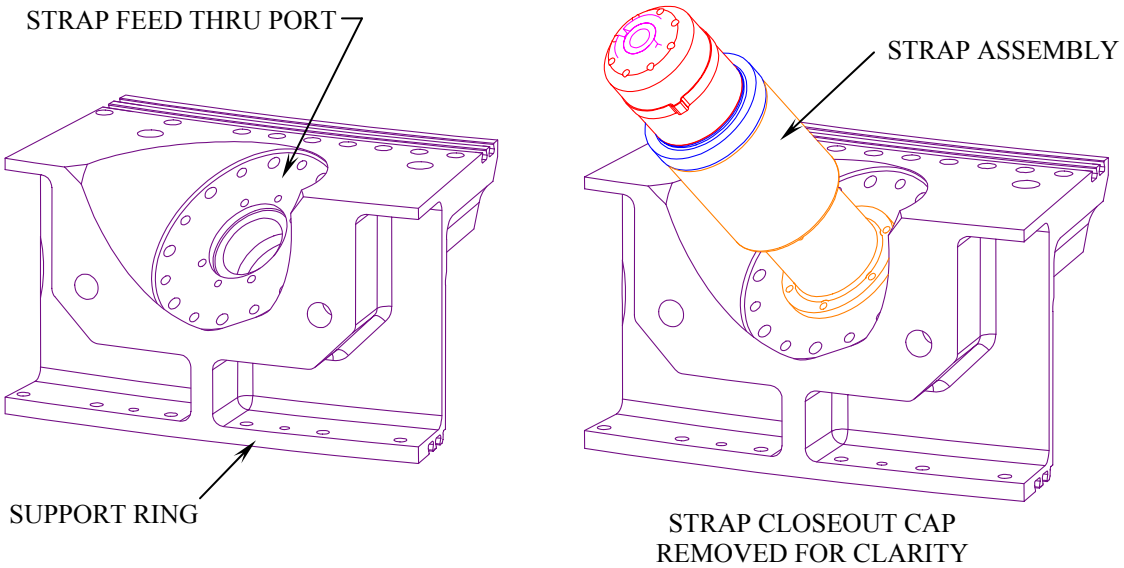

Figure 5.1.4.3-1 Strap Port ISO Views

The VC will also have 3 burst disks in series for emergency venting. The VC has a positive pressure rating of +0.8 atm and a negative pressure rating of -1.0 atm. The burst disks have a positive pressure rating of +0.8 atm and a negative pressure rating of -1.5 atm. Reference Figure 5.1.3-1 for a schematic showing the location of the burst disks.

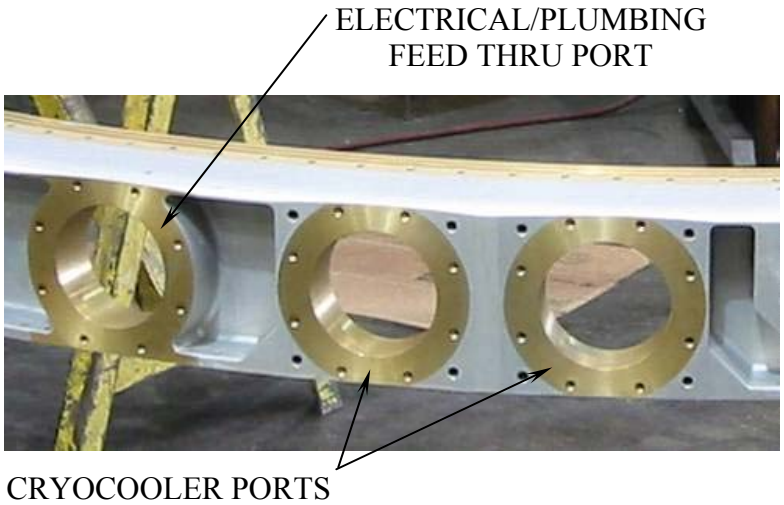

Figure 5.1.4.3-2 Feed Thru Ports

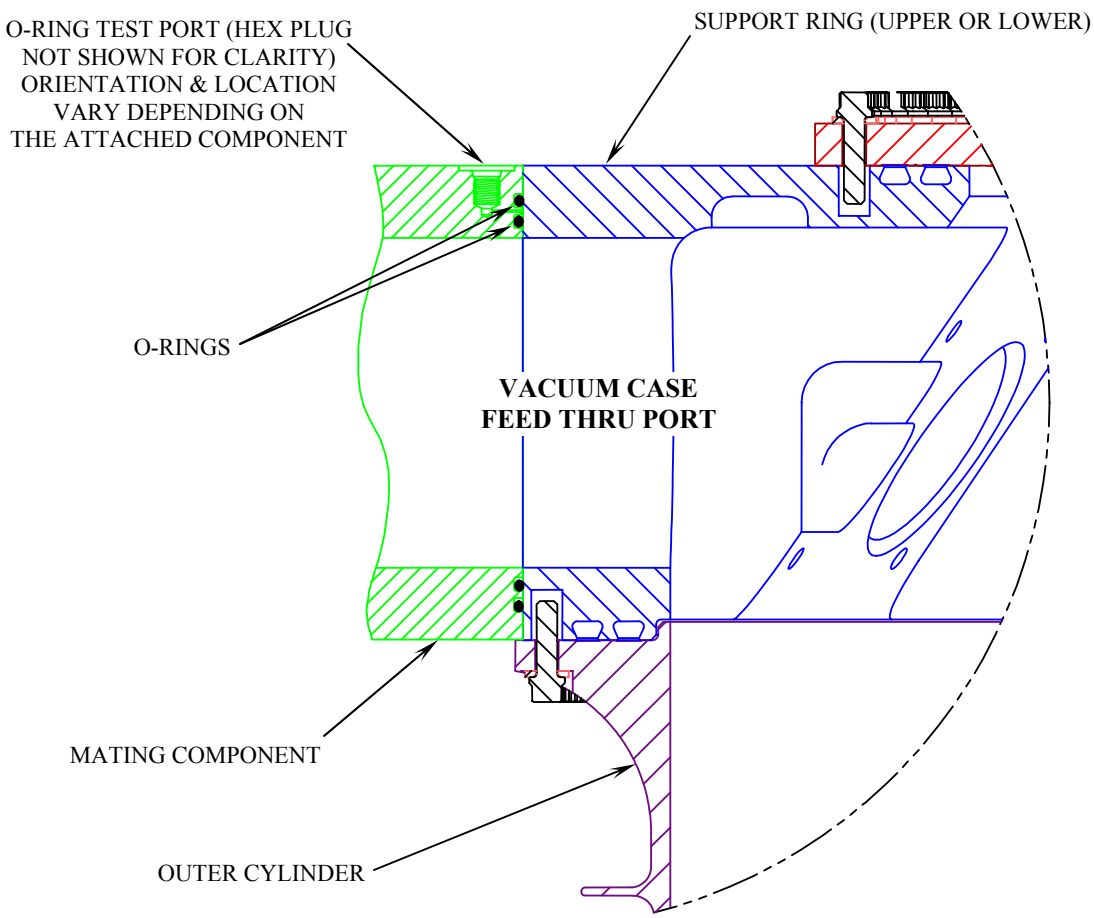

Figure 5.1.4.3-3 Mating Component Layout

5.1.4.4 Design Requirements and Verification Methods

The lower design temperature limit of the Vacuum Case is -58° F and the upper limit is 122° F. Both the STA and Flight VCs are vacuum and pressure leak checked at STADCO. This testing will also be conducted after the cold mass replica (for the STA VC) and magnet installation (for the flight VC) is completed.

Each VC, STA and flight, is pumped down to reach a minimum vacuum level of 1×10^{-6} torr and each o-ring is tested to assure a helium permeation rate of 1.0×10^{-7} std cc/sec or less. The STA VC is proof pressure tested to 1.8 atm at STADCO after the closeout weld is completed and prior to removal of the Inner Cylinder. Both VCs are proof pressure tested to 1.8 atm after cold mass replica or magnet installation and the closeout weld is completed.

Direct monitoring of possible leaks and the vacuum quality inside the VC during preflight operations is not possible as atmosphere that leaks inside of the VC will instantly freeze to the components that are the at superfluid helium temperature (4.7 K or less), leaving a vacuum behind. An indirect measurement methodology will be used to ascertain if the VC has begun to leak. This method utilizes the temperature of the superfluid helium and the helium vent rate to establish if there is a heat flux into the system. The only credible source of such heat flux will be the introduction of atmosphere into the VC. These parameters will be monitored and used to determine if there are any leaks into the VC prior to launch as a safety critical Launch Commit Criteria.