5.3 PASSIVE PAYLOAD ATTACH SYSTEM (PAS)

The AMS-02 Payload interfaces with the ISS S3 truss via the Payload Attach System (PAS) (Figure 5.3-1). The PAS is comprised of two halves, the active and passive halves. The active half is an integral part of the truss. The passive PAS is an integral part of the Payload (Figures 5.3-2 & 5.3-3). The AMS-02 PAS Assembly was developed by the AMS-02 Project specifically for the AMS-02 Payload per SSP57003.

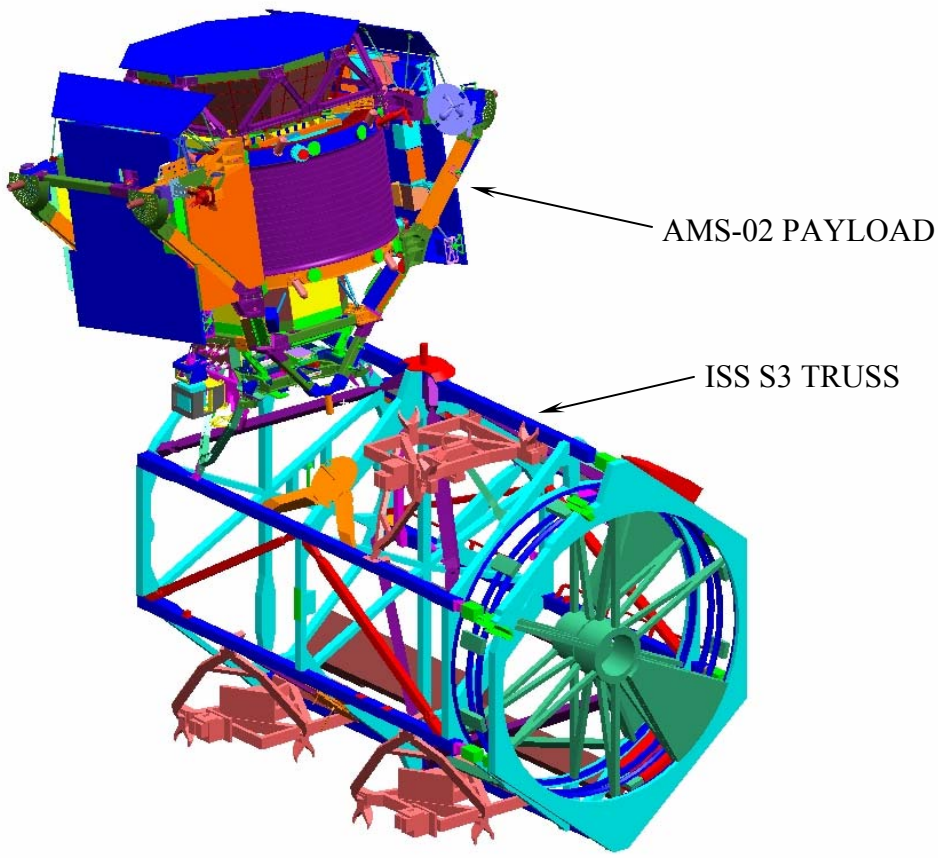

Figure 5.3-1 The AMS-02 Payload on the ISS Starboard 3 (S3) Truss

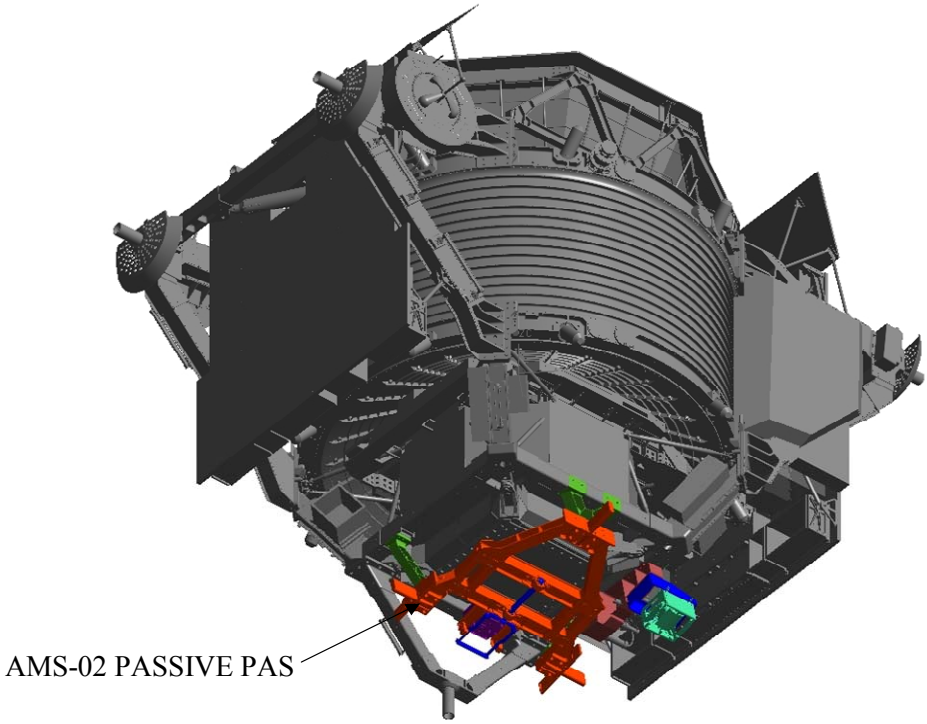

Figure 5.3-2 The Passive PAS on the bottom of the AMS-02 Payload (1 of 2)

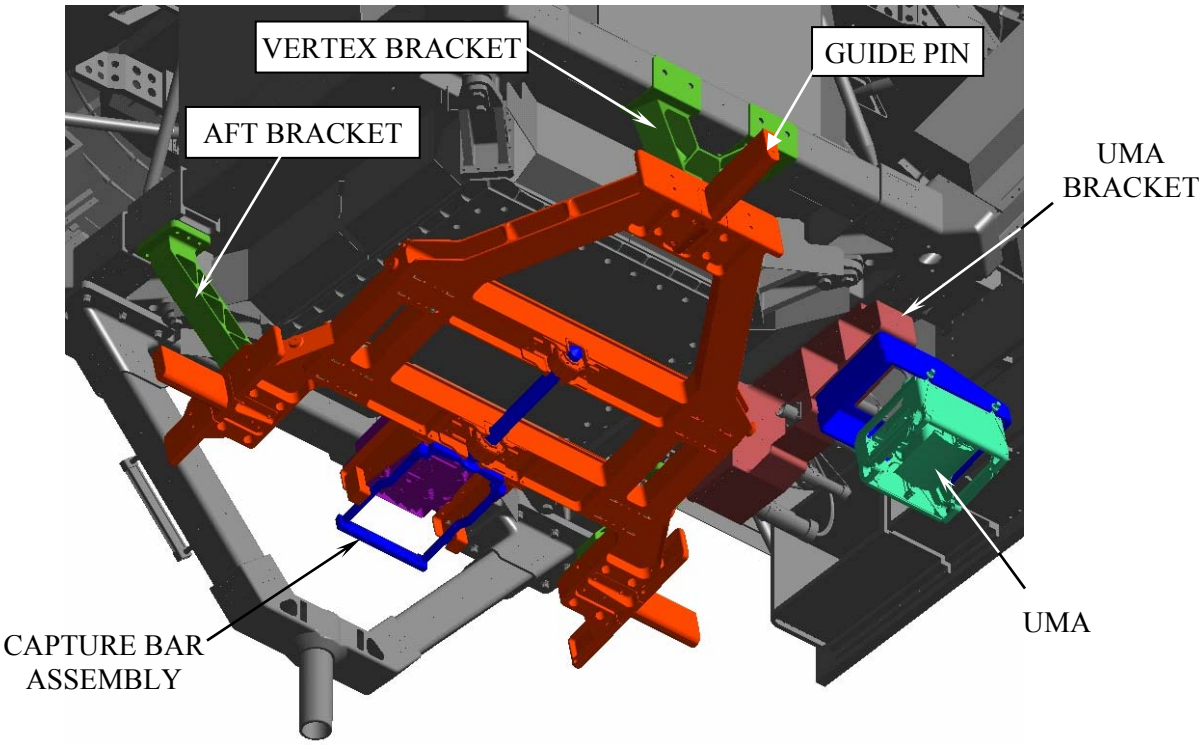

Figure 5.3-3 The Passive PAS on the bottom of the AMS-02 Payload (2 of 2)

The PAS (active and passive) consists of three basic pairs of components that interact to mate the payload to the ISS (Figures 5.3-4 thru 5.3-6): the active half Capture Claw and passive half Capture Bar, the three active half Guide Vanes and the passive half Guide Pins, and the active Umbilical Mechanism Assembly (UMA) and the passive UMA. The Capture Claw, Capture Bar, Guide Vanes, and Guide Pins provide the structural attachment for the Payload to ISS and the active and passive UMA provide power and data connection from ISS to the Payload.

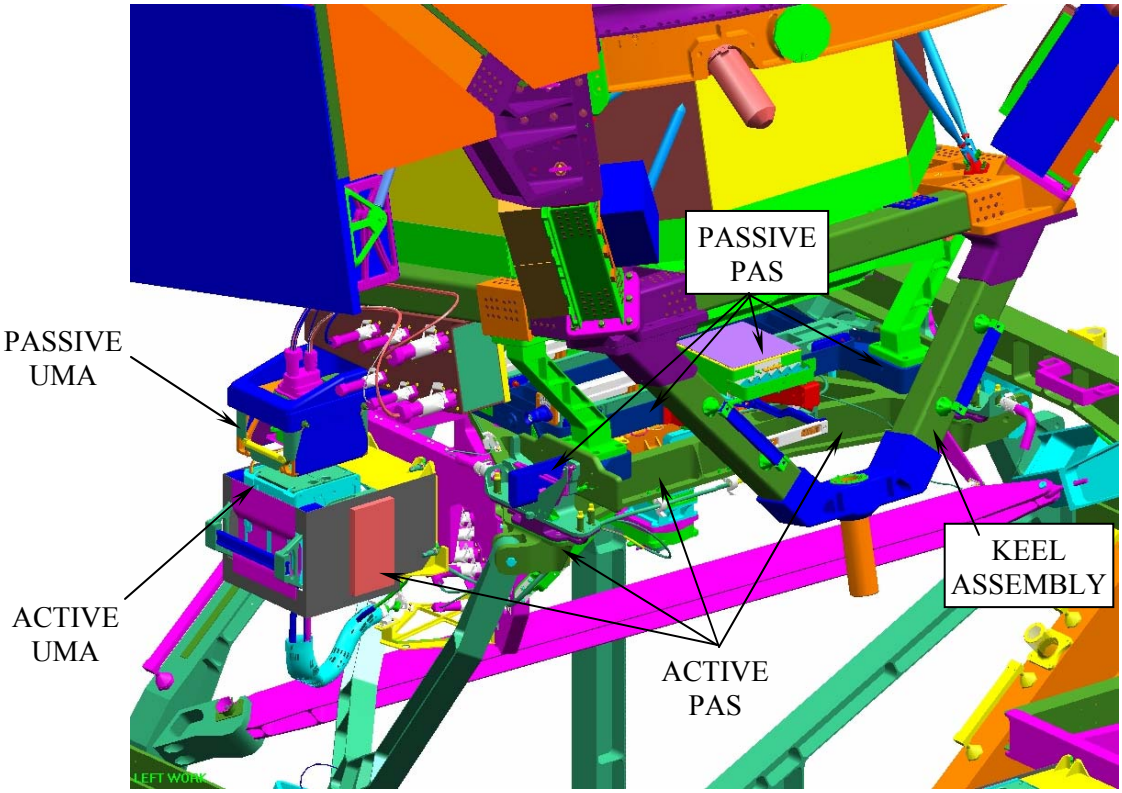

Figure 5.3-4 The AMS-02 Passive PAS attached to the ITS3 Active PAS (1 of 3)

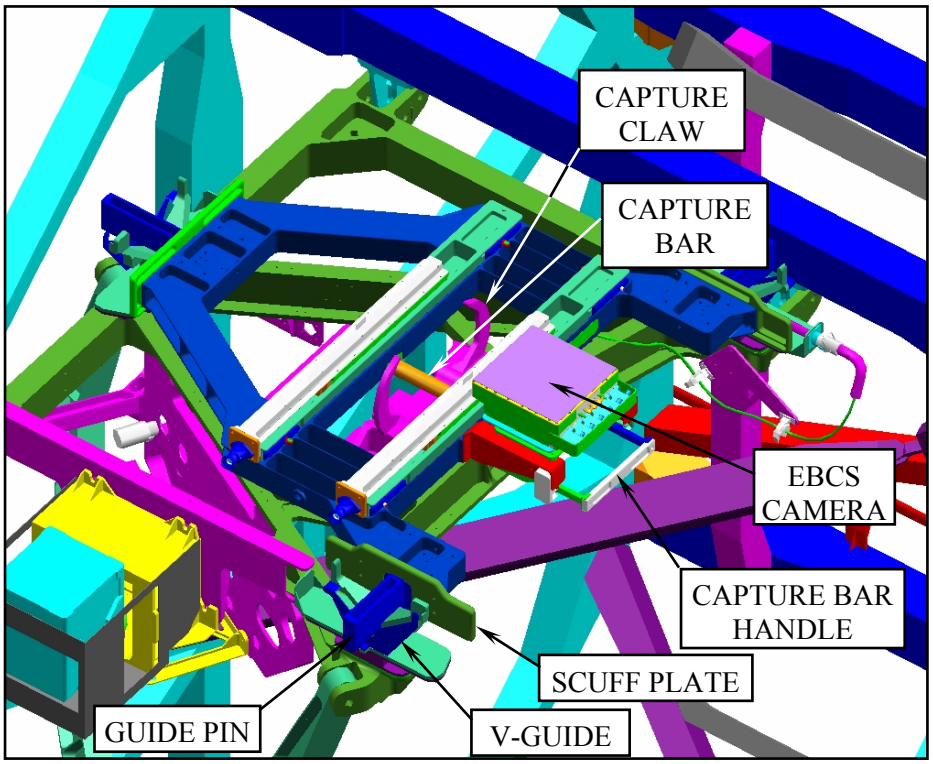

Figure 5.3-5 AMS-02 Passive PAS attached to the ITS3 Active PAS (2 of 3)

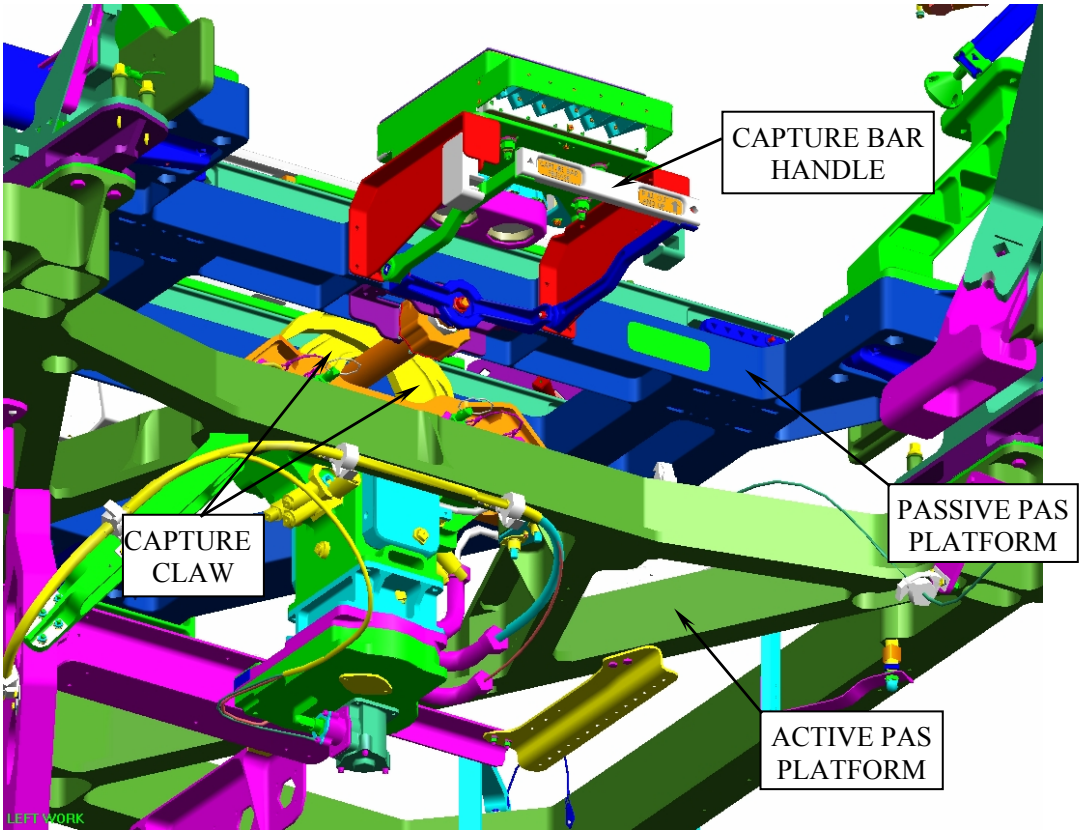

Figure 5.3-6 AMS-02 Passive PAS attached to the ITS3 Active PAS (3 of 3)

The Capture Claw latches onto and pulls down on the Capture Bar. This induces a load in the system that is reacted via the Guide Vane / Guide Pin interface. When the Capture Claw is fully closed, it imparts a 6200LB +/- 10% load into the system thus clamping the two halves together. This load holds the payload to the ISS. Once the Payload is structurally mounted to ISS the active UMA is driven into the passive UMA. The passive UMA is GFE from ISS. The Payload only provides structural mounting and power and data connectors to the passive UMA.

5.3.1 EVA Releasable Capture Bar

Per SSP 57003, the AMS-02 PAS incorporates a mechanism to unload the capture bar and release the Payload from the ISS (Figure 5.3.1-1). To unload and release the AMS-02 Payload from ISS, an EVA crewmember first unloads the capture bar, by driving two EVA bolts using the Pistol Grip Tool (PGT). Turning the bolts a defined number of turns and alternating between the two lowers the Capture Bar and relieves any load in the system. The crewmember then retracts the capture bar by reaching thru the AMS-02 Keel structure, grasping the Capture Bar Assembly handle, and pulling the capture bar out towards the keel and up towards the Payload. Once the capture bar is retracted, the Payload is free from the PAS and the ISS.

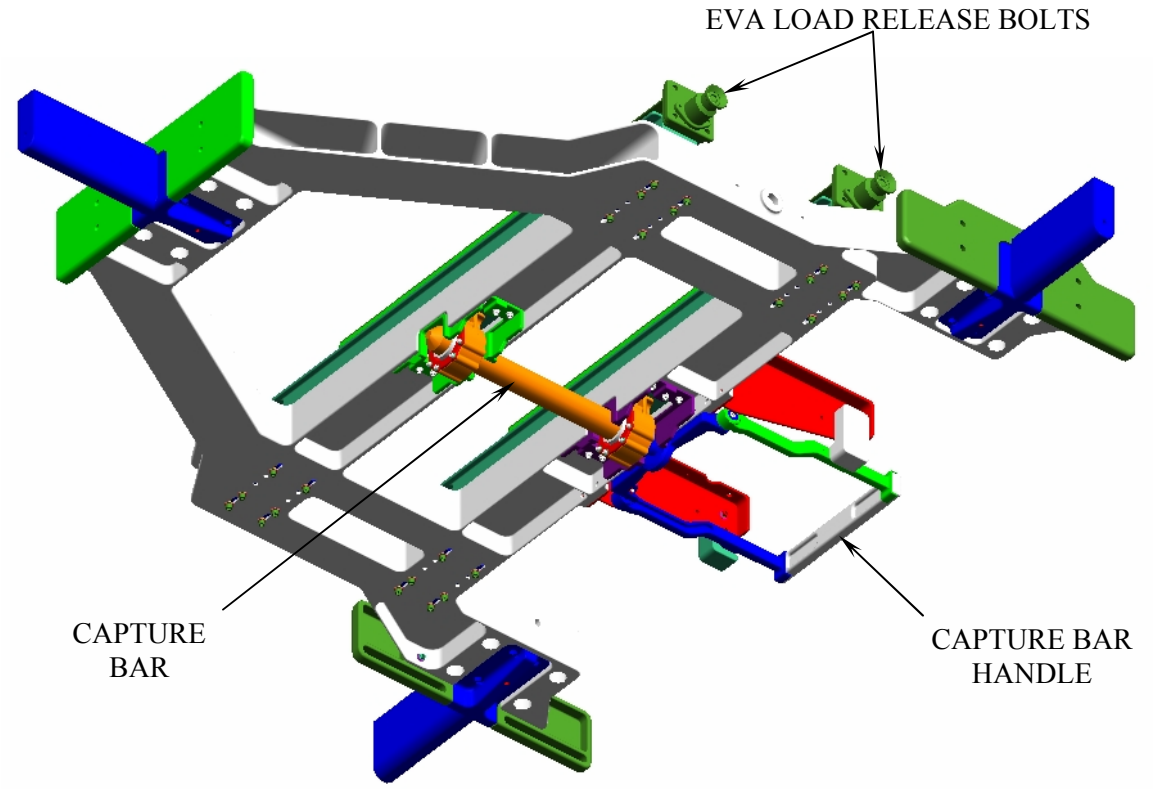

Figure 5.3.1-1 PAS EVA Releasable Capture Bar

The AMS-02 PAS Assembly is bolted to the Lower USS-02 via four brackets, the Vertex Bracket, two Aft Brackets and the UMA Bracket. The AMS-02 PAS Assembly (Figure 5.3.1-2) consists of five bolted subassemblies, the PAS Base Assembly, EVA Extension Assembly, PAS Bridge Assembly, Capture Bar Assembly, and EBCS Avionics Assembly. All bolts used in the AMS-02 PAS Assembly are certified by the NASA/JSC Fastener Integrity Program and utilize locking nut or inserts or self-locking bolts as a secondary method of back-out prevention.

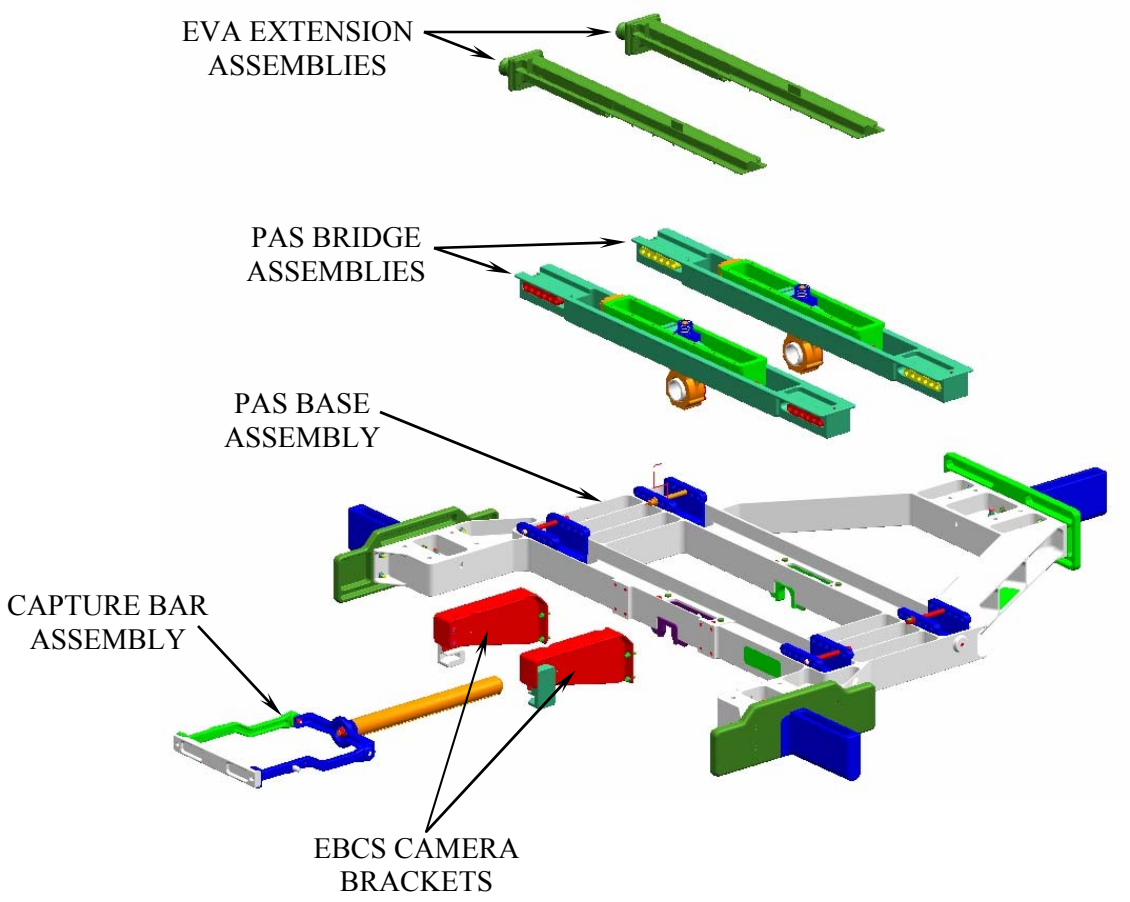

Figure 5.3.1-2 AMS-02 PAS Component Detailed Description

The PAS Base Assembly is the overall structural member of the PAS Assembly. All other subassemblies are supported by it. The PAS Bridge Assembly supports the Capture Bar Assembly and encompasses the Capture Bar Release Mechanism. The EVA Extension Assembly provides a standard 7/16" EVA socket interface, a locking feature to prevent back out of the Capture Bar Release Mechanism and a cover for the PAS Bridge Assembly. The EBCS Avionics Assembly locates and supports the EBCS Camera and provides brackets to retain Capture Bar Handle.

The PAS Base Assembly is composed of the PAS Platform, Guide Pins, Scuff Plates, and Capture Bare Retainer Brackets as show in Figure 5.3.1-3. The PAS Platform is a single piece of machined 7050-T7451 aluminum plate. It is the structural element that ties all the PAS components to the brackets that attach it to the Lower USS-02 and the rest of the

Payload. The aluminum Guide Pins, Scuff Plates, and stainless steel Capture Bar Retainer Brackets are all bolted to the PAS Platform.

PAS BASE ASSEMBLY COMPONENTS

- PAS PLATFORM
- GUIDE PINS
- SCUFF PLATES
- CAPTURE BAR RETAINER BRACKETS

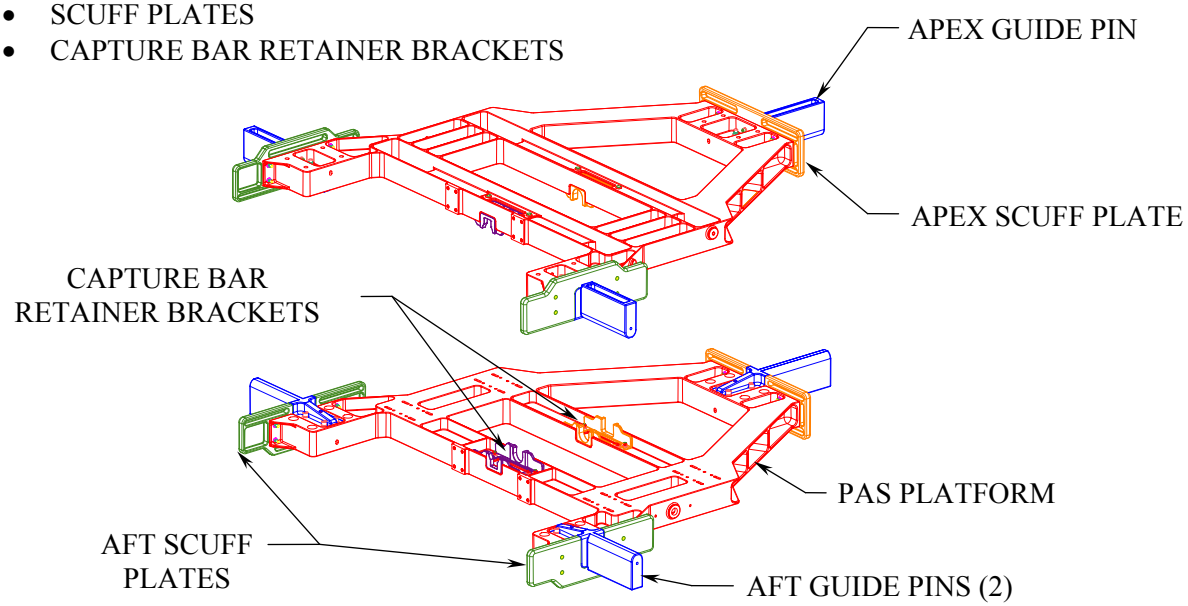

Figure 5.3.1-3 PAS Base Assembly

The EVA Extension Assembly is composed of the EVA Screw Extension, Screw Locking Housing, Lock Retractor, Compression Spring, and Release Mechanism Cover. The EVA Screw Extension, Compression Spring, Locking Retractor and Locking Mechanism Base are all made from A286 stainless steel. The Release Mechanism Cover is made from 7075 aluminum alloy. The EVA Extension (Figure 5.3.1-4) has an internal hex on one end and an external EVA tool compatible hex on the other end. Just below the external hex is a flange that prevents the extension from passing thru the Release Mechanism Cover. The Compression Spring and Locking Retractor stack on top of the flange. The Locking Mechanism fits over and retains the assembly with two screw threaded into the Release Mechanism Cover.

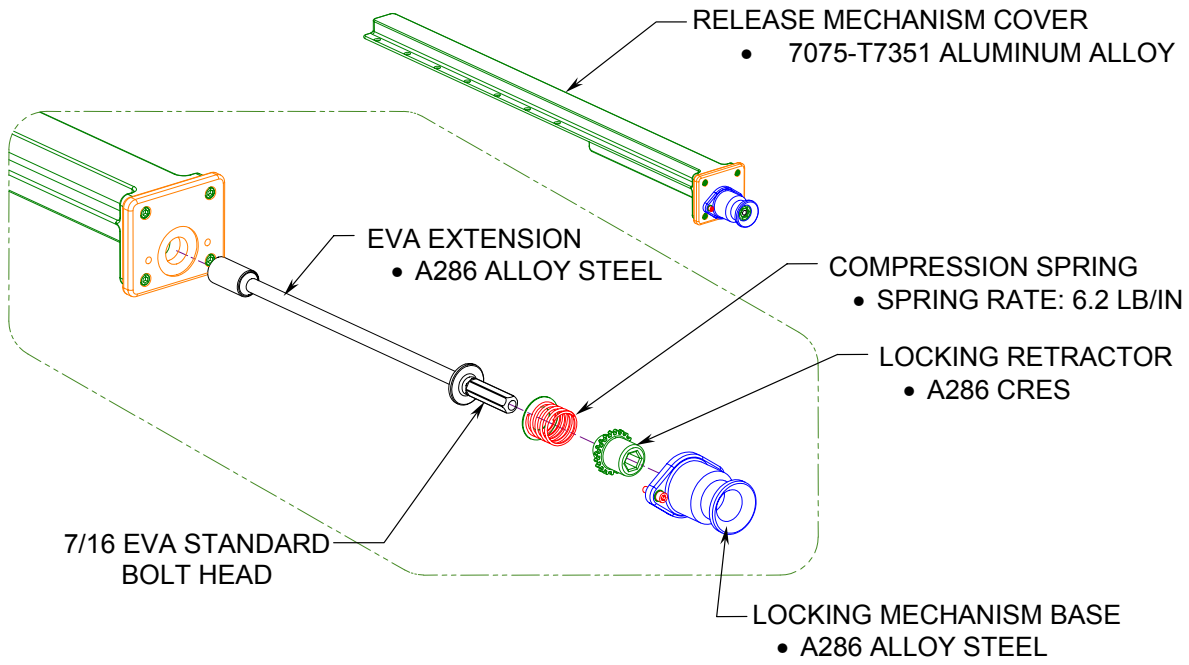

Figure 5.3.1-4 EVA Extension Assembly

The PAS Bridge Assembly (Figure 5.3.1-5) is composed of the Bridge, Load Release Mechanism and the Bearing Assembly. The Bridge is machined from one piece of 7075 aluminum alloy. The Release Mechanism Assembly is bolted onto the Bridge with four bolts. The Bearing Assembly's threaded shaft passes thru a hole in the Bridge and Release Mechanism Housing and thru a slot in the Wedge and is retained by a nut and mating wedge shaped washer. This washer is held against the Wedge by a compression spring that bears up against the EVA Extension Assembly Cover.

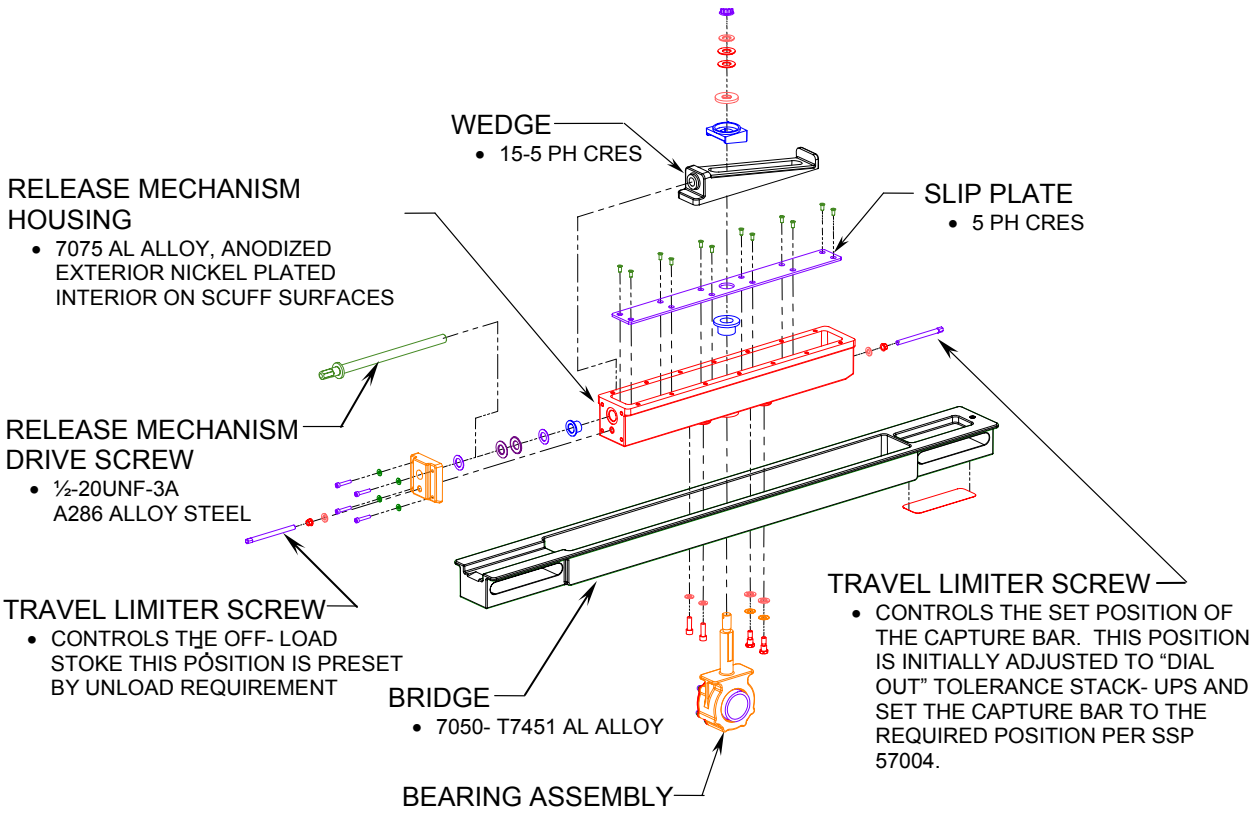

Figure 5.3.1-5 PAS Bridge Assembly and Load Release Mechanism

The Load Release Mechanism is composed of the Release Mechanism Housing, the Release Mechanism Drive Screw and Wedge, and Travel Limiter Screws. The Release Mechanism Drive Screw is made from A286 stainless steel and is sandwiched between the 7075 aluminum alloy Release Mechanism Housing and an aluminum alloy retainer bracket. Its threaded shaft passes thru the housing and threads into the Wedge. The15-5PH stainless steel Wedge has a threaded hole on one end for the Release Mechanism Drive Screw, and a slot along its length for the Bearing Assembly rod to pass thru. The A286 stainless steel Travel Limiter Screws thread into and pass thru the Release Mechanism Housing. A nut on the inside of the Release Mechanism Housing provides as secondary locking feature for the Travel Limiter Screws. The limiter screw on the same side as the thick portion of the Wedge sets the unloaded limit of the Bearing Assembly. The opposite limiter screw sets the loaded position of the Bearing Assembly.

The Bearing Assembly is comprised of a 15-5PH stainless steel Bearing Housing, a stainless steel, PTFE lined spherical bearing and an A-286 stainless steel retainer plate. The spherical bearing is pressed into the Bearing Housing and is retained by the retainer plate. The retainer plate is secured using 5 screws threaded into the Bearing Housing.

The primary components of the Capture Bar Assembly (Figure 5.3.1-6) are the Capture Bar, Capture Bar Removal Handle and Capture Bar Handle Base, Handle Extensions and Handle Pins.. The Capture Bar is a dry film lubricated Custom 455 stainless steel bar with a closed ended slot machined down the side and a treaded boss on one end. The slot interfaces with a key in the Spherical Bearing Assembly to retain the Capture Bar with the PAS Assembly. The 6061 aluminum alloy Capture Bar Removal Handle bolted to two 6061 aluminum alloy Handle Extensions. The Handle Extensions are bolted to the 15-5PH stainless steel Handle Base with two screws and aluminum bronze bushing which allow the handle to pivot. The Capture Bar Handle Base is fixed to the Capture Bar by a nut threaded onto a boss machined into Capture Bar. The handle base has a groove machined into it that mates with the Capture Bar Retainer Bracket to retain the Capture Bar Assembly while in the nominal position.

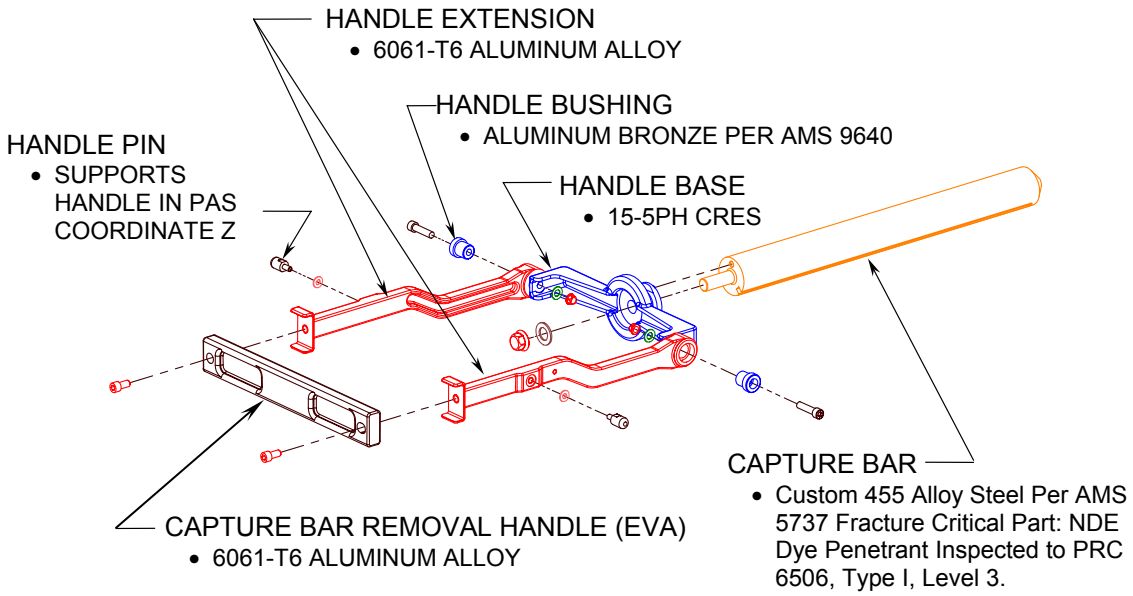

Figure 5.3.1-6 Details of the PAS Capture Bar

The EBCS Avionics Package (Figure 5.3.1-7) consists of the EBCS Camera and the EBCS Camera mounting Brackets. The 6061 aluminum alloy EBCS Camera Mounting Brackets bolt to the PAS Base Assembly with four screws per bracket. Each bracket contains another bracket to hold the Capture Bar Assembly Handle. The EBCS Avionics Package is bolted to the EBCS Camera Mounting Brackets.

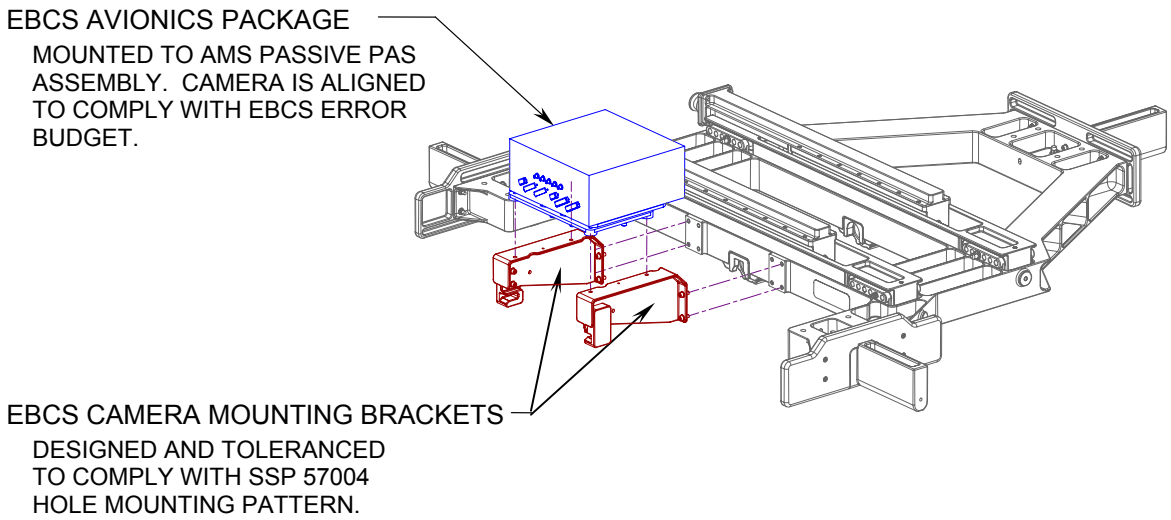

Figure 5.3.1-7 EBCS Avionics Package mounting to the PAS

5.3.2 EVA Release Mechanism

The EVA bolt head that the crewmember drives with the PGT to unload the AMS-02 PAS is machined into one end of the EVA Extension (Figure 5.3.2-1). The other end is mechanically coupled to the Release Mechanism Drive Screw that is captured by the Release Mechanism Housing and threaded into the Wedge. When the EVA Extension is turned, the Wedge translates along the axis of the drive screw as a nut would on a threaded rod. On top of the Wedge is another wedge shaped block that supports the spherical Bearing Housing that, supports the Capture Bar Assembly. When the Wedge translates, the inclined plane of the Wedge forces the Capture Bar Assembly up or allows it translate down depending on the direction of the Wedge translation. The torque required to drive the EVA unload mechanism is 2.25 FT-LBS

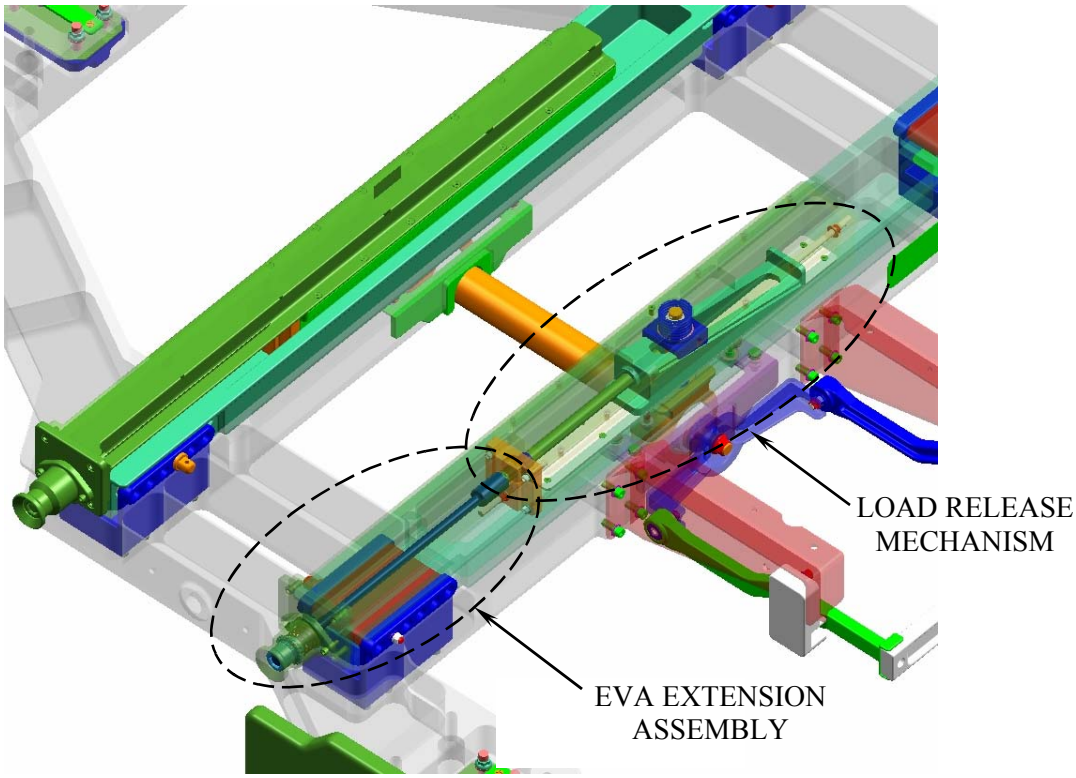

Figure 5.3.2-1 PAS Load Release Mechanism

In the nominal flight configuration, the EVA Extension is captured and prevented from turning by a locking mechanism (Figures 5.3.2-2 & 5.3.2-3) that is part of the EVA Extension Assembly. This assembly contains the Locking Retractor that has a hex shaped thru hole that fits around the hex of the EVA Extension bolt head and external teeth that mesh with teeth machined in the Locking Mechanism Base. The Locking Retractor is held up against the inside of the Locking Mechanism Base by spring force imparted by the compression spring. The Locking Mechanism Base is held in place by two screws that mount it to the EVA Extension Assembly. Locking Retractor must be pushed inward to disengage its locking teeth with the teeth in the Locking Mechanism Base. The force required to overcome the spring force of the compression spring and disengage the locking teeth is 5 LBS.

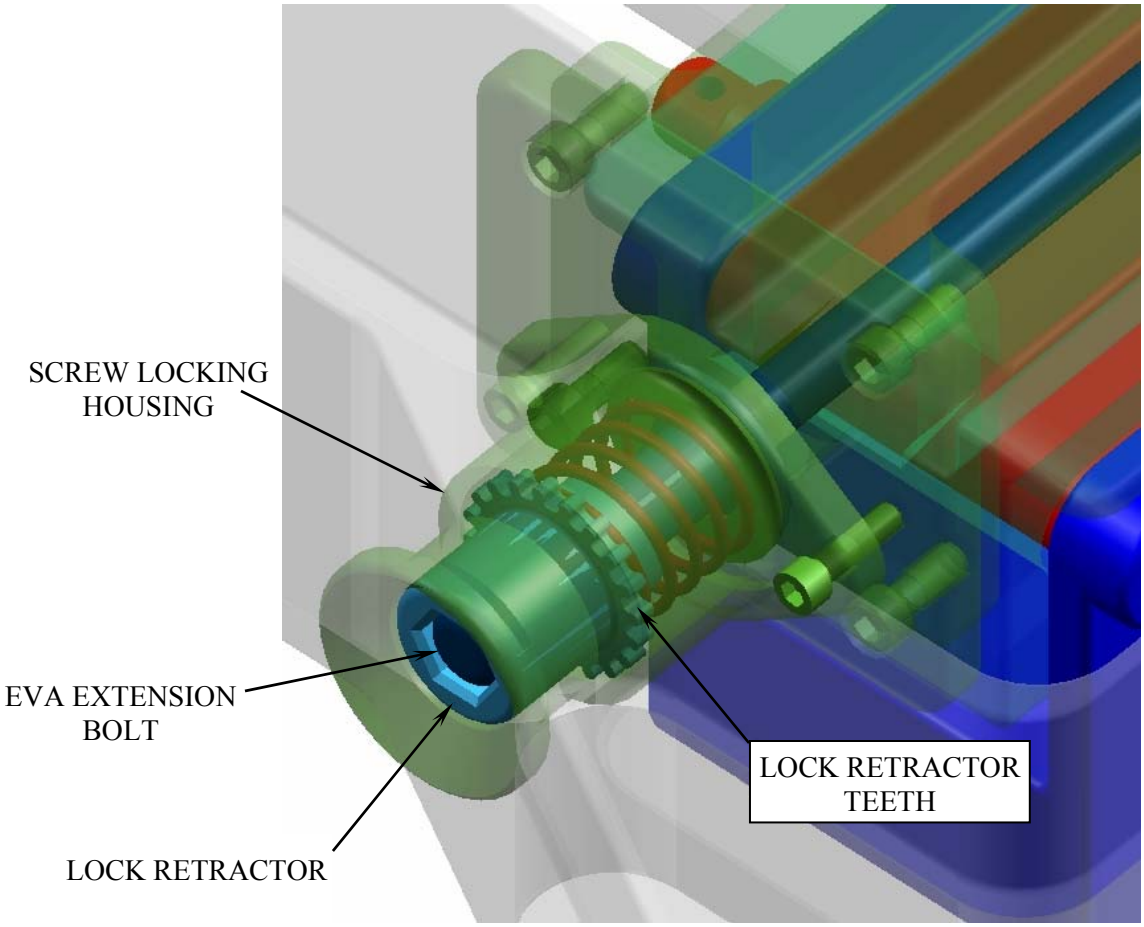

Figure 5.3.2-2 EVA Extension Locking Mechanism

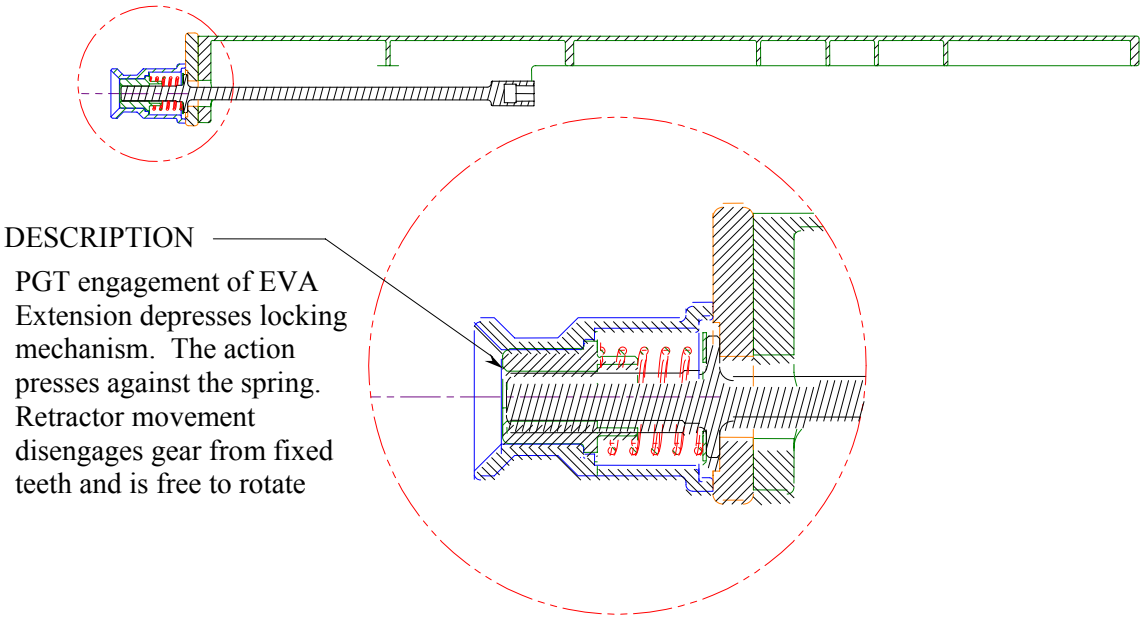

Figure 5.3.2-3 EVA Extension Locking Mechanism

Travel Limiter Screws are threaded into the Release Mechanism Housing that controls the Wedge translation limits. They provide a hard stop for the Wedge and set the height limits of the Capture Bar when the Wedge is at extreme ends its stroke.

When the AMS-02 PAS is in the nominal flight configuration, the Wedge is butted up to the upper limit Travel Limiter Screw (Figure 5.3.2-4). This configuration positions the Bearing Housings closest to the PAS Base. Turning the EVA bolt interface of the EVA Extension clock-wise pulls the Wedge out from underneath the Bearing Housing wedge, allowing the Bearing Housing to drop, thus relieving the load imposed on the Capture Bar by the ISS Capture Claw. A compression spring forces the bearing housing down in case there is no load on the Capture Bar.

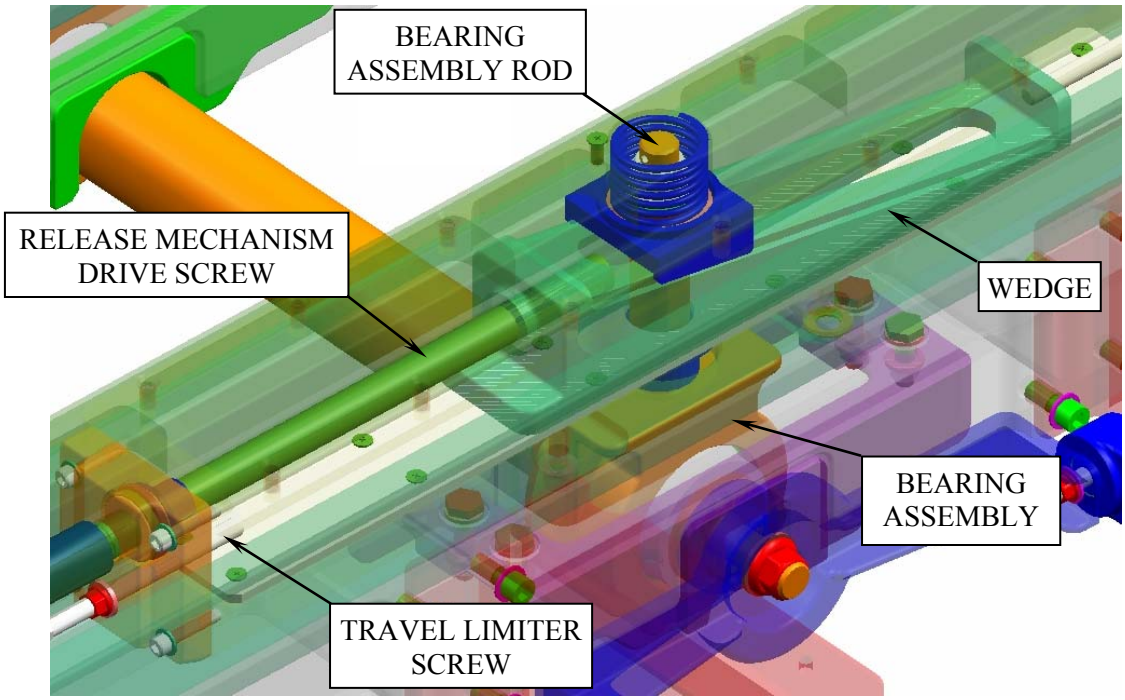

Figure 5.3.2-4 Load Release Mechanism Details

The Capture Bar Assembly (Figures 5.3.2-5 & 5.3.2-6) contains the Capture Bar and the Capture Bar Removal Handle. The Capture Bar is supported by the spherical bearings in the Bearing Assemblies and the Removal Handle is held in place by slots in EBCS Camera Brackets. In the nominal flight configuration, the Capture Bar Assembly is locked in place by mating grooves in the Capture Bar and Capture Bar Retainer Bracket. Four bolts secure the Capture Bar Retainer Bracket to the PAS Base. Once the Capture Bar is unloaded and driven fully down, where the Wedge is against the lower limit Travel Limiter Screw, it will clear the slots in the retainer brackets and it can be slid out of one of the spherical Bearing Housing by pulling the Capture Bar Removal Handle. The Capture Bar Assembly is prevented from sliding free of the PAS by means of a key that fits into a close-ended groove machined into the Capture Bar. The key is fixed to the Bearing Housing nearest to the Capture Bar Removal Handle.

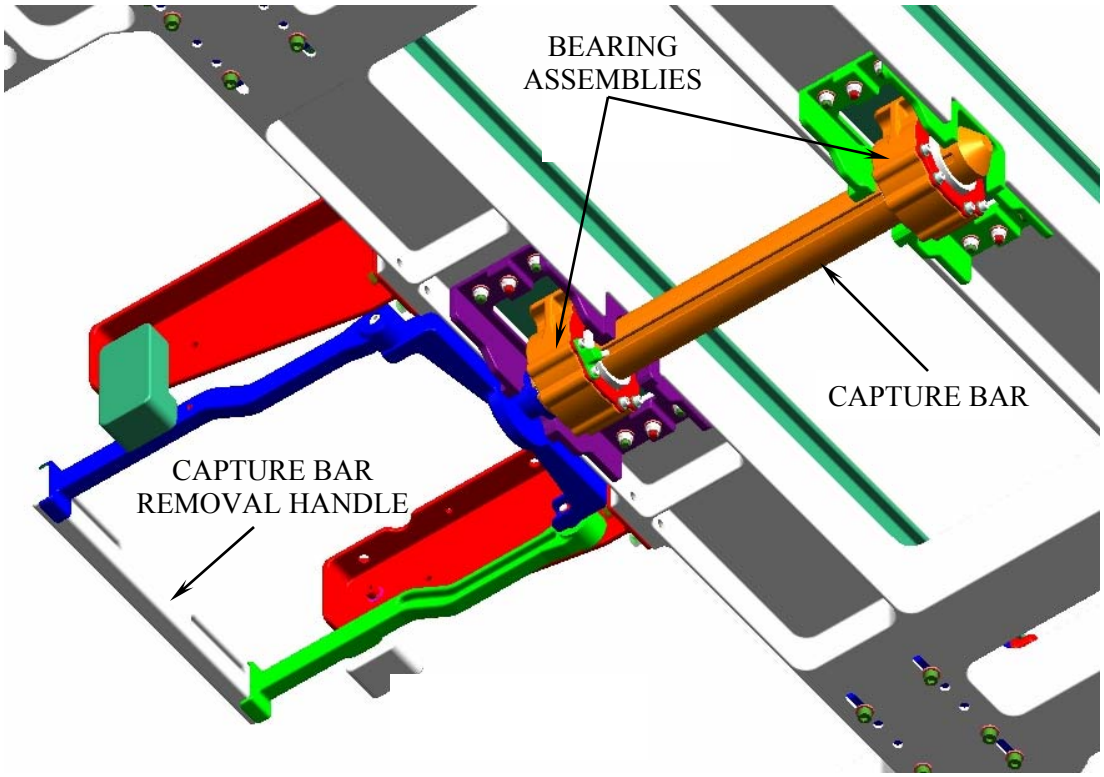

Figure 5.3.2-5 EVA Removable Capture Bar Assembly (1 of 2)

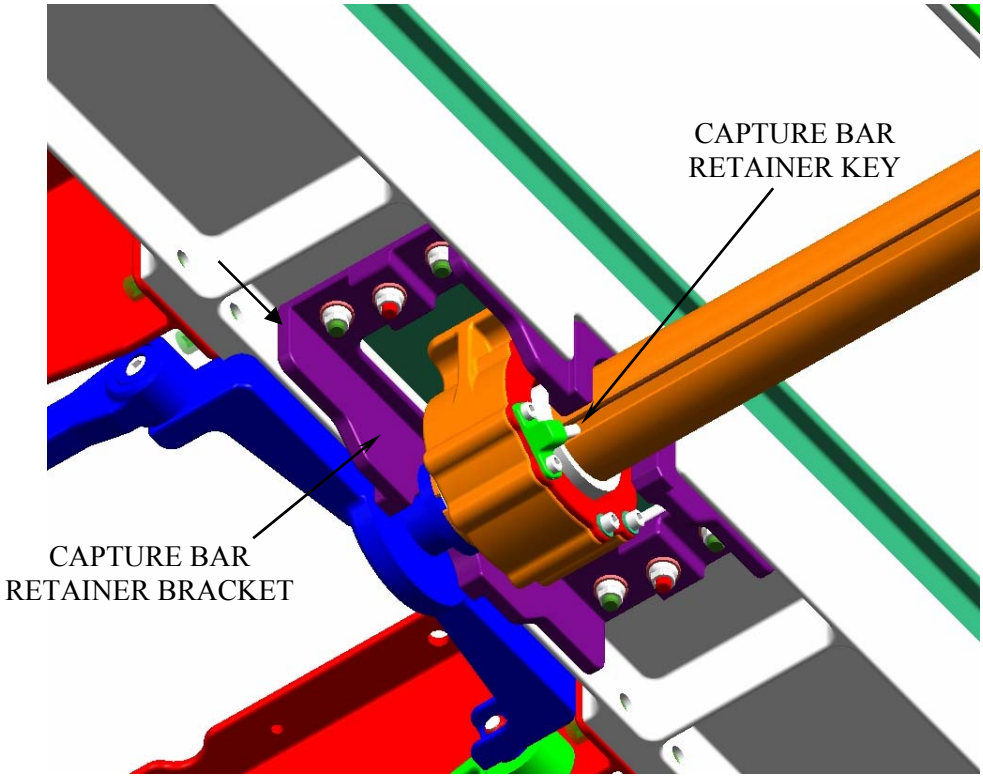

Figure 5.3.2-6 EVA Removable Capture Bar Assembly (2 of 2)

5.3.3 PAS Testing

Static and Interface Verification tests were performed on the AMS-02 PAS.

5.3.3.1 Static Test

The Static Test (Figures 5.3.3.1-1 & 5.3.3.1-2) was performed to:

- Correlate the NASTRAN model with the flight hardware
- Demonstrate the maximum preload capability
- Set the PAS stiffness as close as possible to the required stiffness per SSP 57003
- Demonstrate the ability to off-load the Capture Bar Preload using the Capture Bar Release Mechanism
- Use the adjustability of the spring system to level the Capture Bar
- Determine the final configuration of the hardware

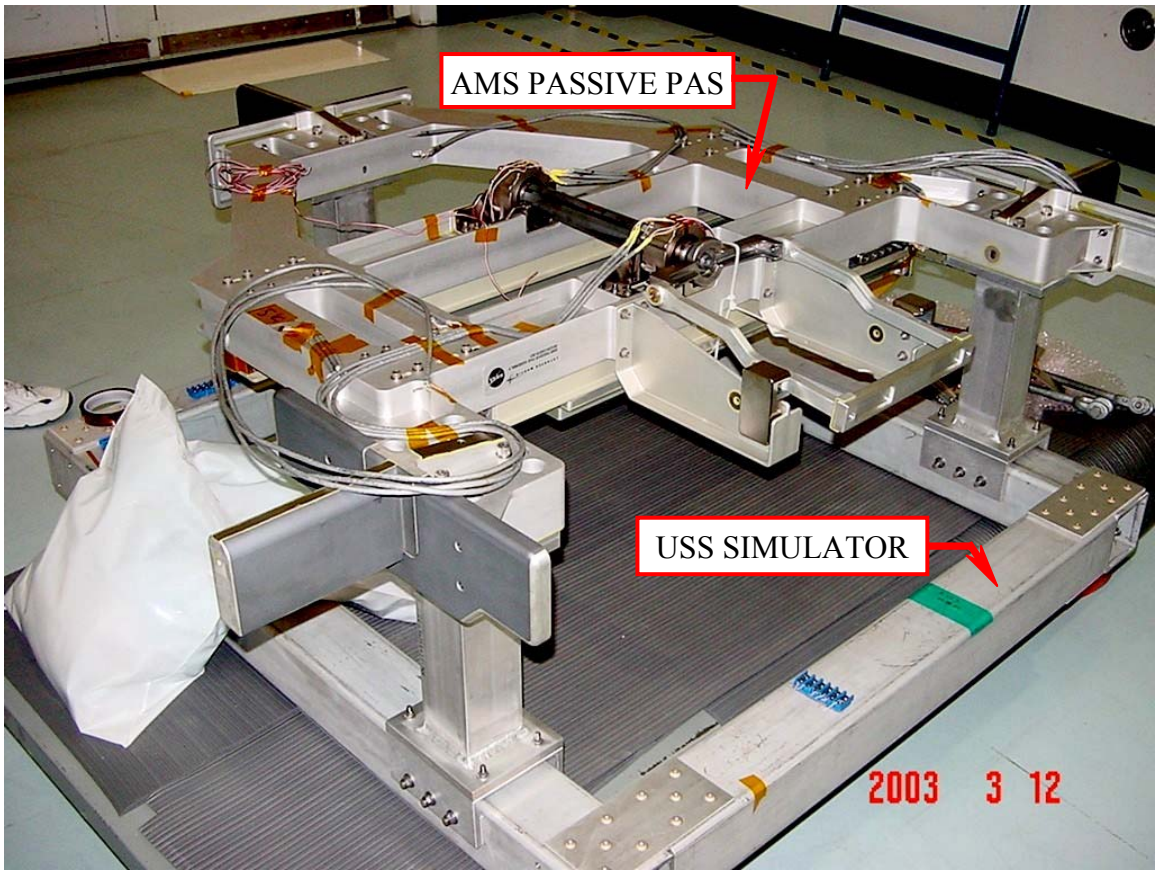

Figure 5.3.3-1 AMS Passive PAS with USS Simulator – Test Configuration

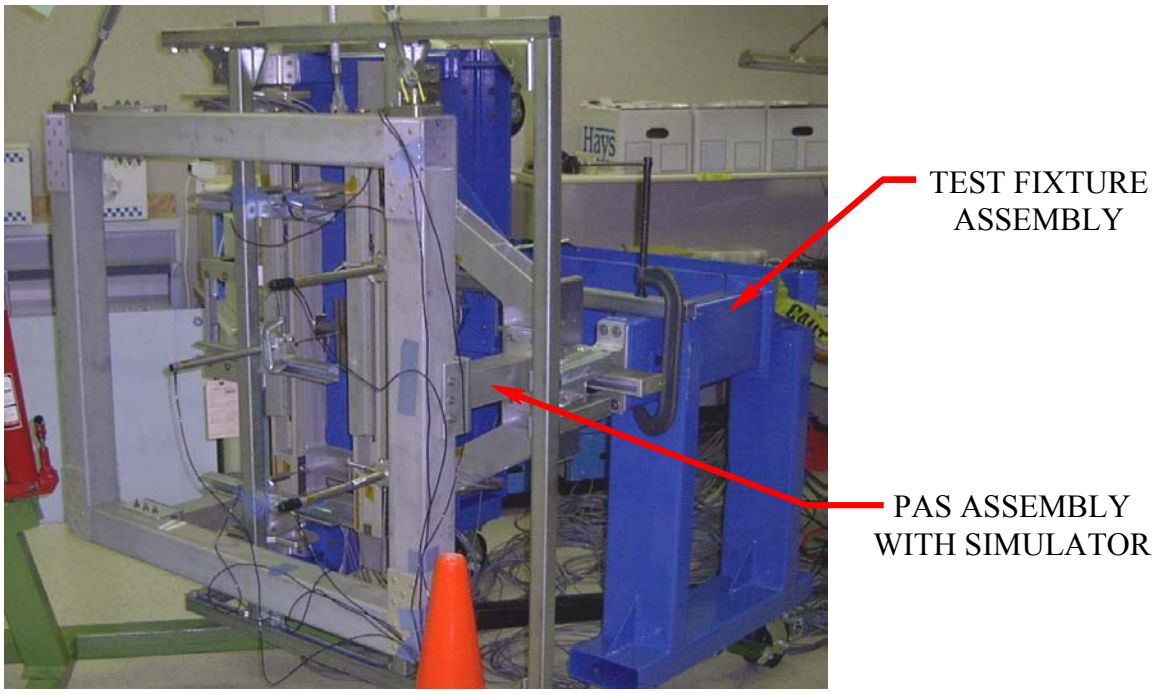

Figure 5.3.3-2 AMS Passive PAS/USS Simulator Assembly On Test Stand

5.3.3.2 Interface Verification Test

The Interface Verification Test was performed to verify the AMS-02 PAS interfaces with the actual ISS active PAS hardware (Figure 5.3.3.2-1). The AMS Passive PAS was lifted to the Upper Inboard PAS number 2 Active PAS site (Figure 5.3.3.2-2). The PAS 2 Capture Claw was then closed on the AMS PAS Capture Bar (Figure 5.3.3.2-3). Once the capture claws were closed, the preload at full closure was measured. The proximity of the PAS Capture Bar Mounting hardware to the EBCS Target Assembly was measured at loaded condition. The AMS Passive PAS Release Mechanism was used to unload the Capture Claw Preload (Figure 5.3.3.2-4). Proximity to Target was measured in unloaded condition. The Capture Bar was removed demonstrating the required contingency capability to unload and remove the payload

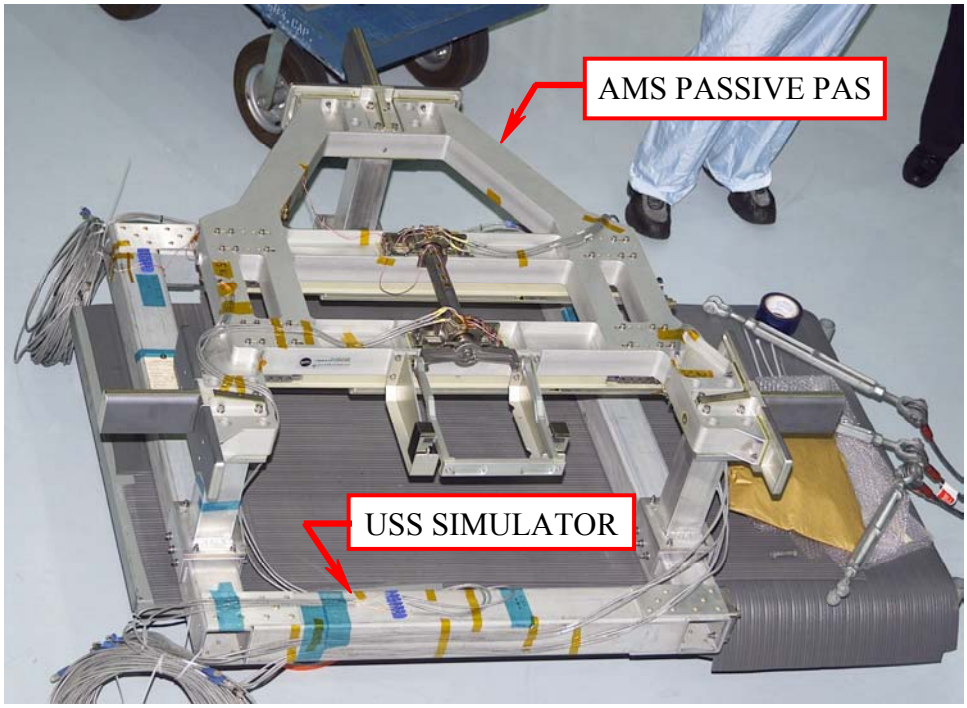

Figure 5.3.3.2-1 IVT Test Configuration

(NOTE: The IVT Configuration was identical to the AMS PAS Static Test)

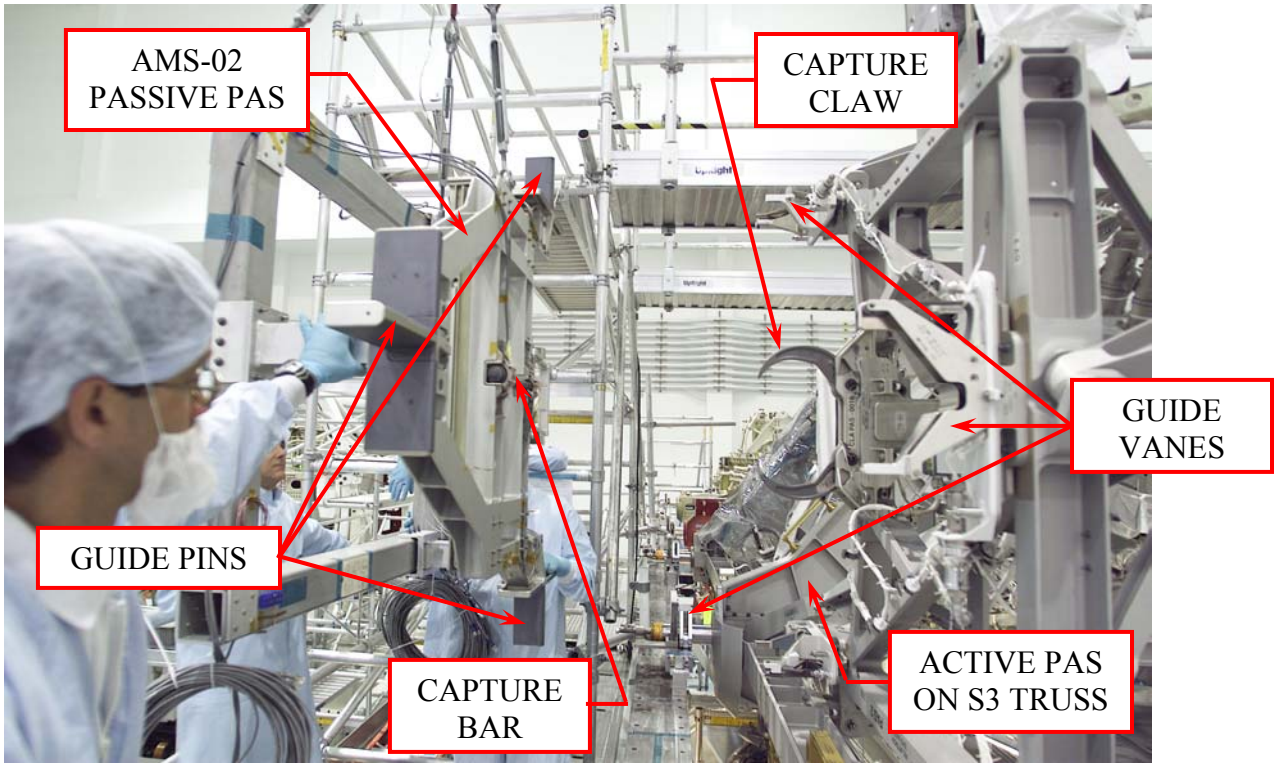

Figure 5.3.3.2-2 The AMS Passive PAS on Berthing Approach to PAS site 2

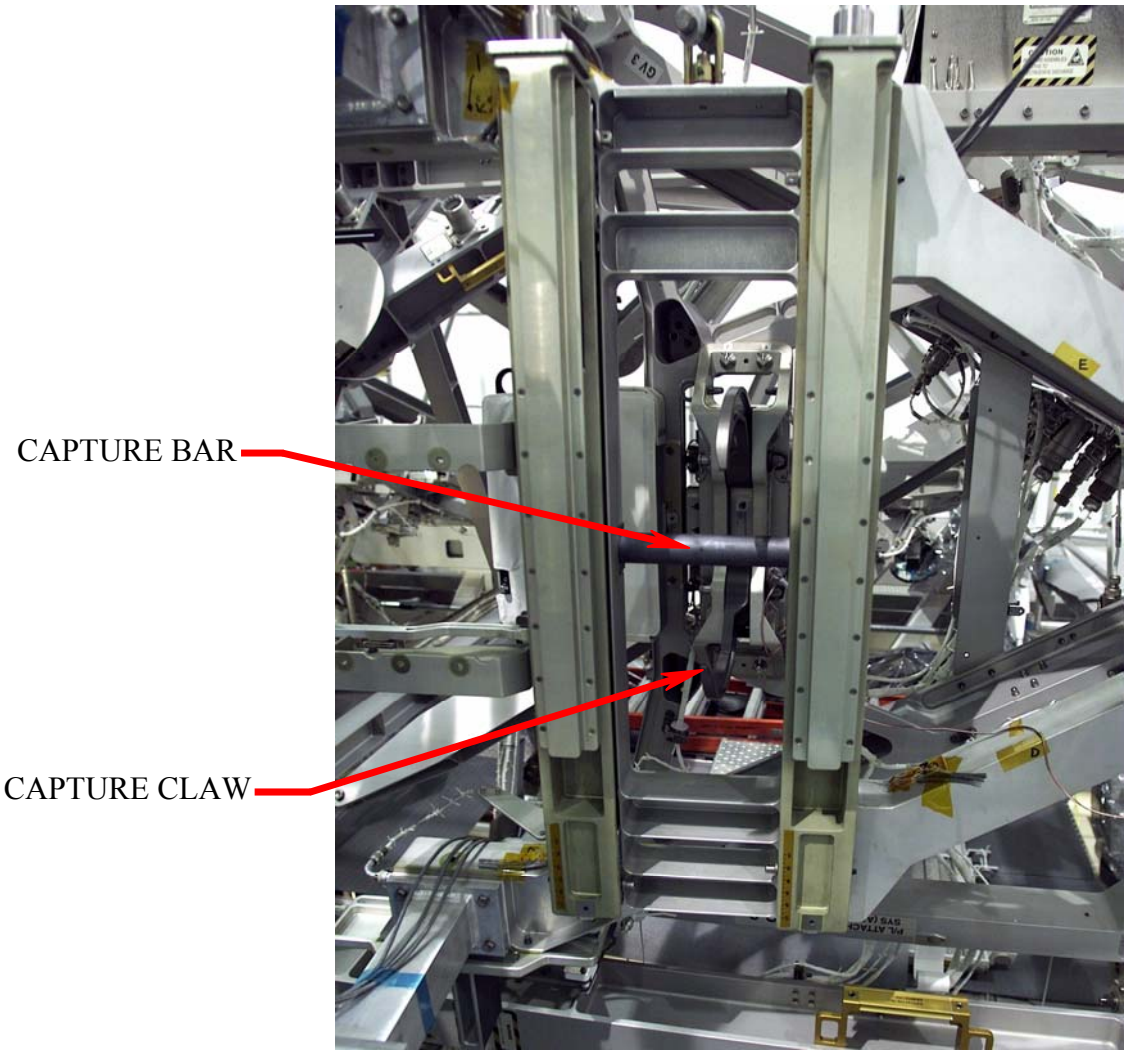

Figure 5.3.3.2-3 AMS Passive PAS Berthed to the S3 Active PAS 2

Figure 5.3.3.2-4 Removing the Preload with the EVA Release Mechanism