Strength and Stability Assessment of the Alpha Magnetic Spectrometer-02 (AMS-02) Unique Support Structure (USS-02), Vacuum Case, Payload Attach System (PAS), and STS and ISS Integration Hardware

Engineering & Science Contract Group (ESCG)

July 2009

ESCG-4005-05-AMS-0039

Strength and Stability Assessment of the Alpha Magnetic Spectrometer-02 (AMS-02) Unique Support Structure (USS-02), Vacuum Case, Payload Attach System (PAS), and STS and ISS Integration Hardware

Prepared By:

Gilberto Reyes
Stress Analyst

Reviewed By:

Carl Lauritzen
Structural Lead

C. Balasubramanian
AMS-02 Structural Engineer

Approved By:

8-12-09

Michael Trznadel Jr.
ESCG Structural Group Manager

DOCUMENT CHANGE/REVISION LOG			
CHANGE/ REVISION	DATE	DESCRIPTION OF CHANGE	PAGES AFFECTED

0.1 Abstract

This report contains the structural assessment of the AMS-02 components that includes the Unique Support Structure, the Vacuum Case, the Payload Attach System, and the Payload Integration Hardware. The analysis was performed per the requirements specified in the Alpha Magnetic Spectrometer - 02 (AMS-02) Structural Verification Plan for the Space Transportation System and the International Space Station (ISS) JSC-28792. This report contains descriptions of the math model, load factors for design and analysis of structural components, design factors of safety, thermal considerations, and verification approach. A detailed stress analysis was performed for components in the USS, Vacuum Case, PAS, and the payload integration hardware. Portions of this stress analysis were performed by Lockheed Martin under the SEAT contract, but as of 02/01/05, the remaining analysis was performed by Jacobs under the Engineering & Science Contract Group (ESCG) contract.

0.2 Table of Contents

0.1 Abstract iv
0.2 Table of Contents v
0.3 Minimum Margins of Safety ix
0.4 Fail-safe Minimum Margins of Safety xxxvi
0.5 Table of Figures xlvii
0.6 Table of Tables liv
0.7 Acronyms lix
0.8 References lxi
1.0 Introduction 1.0-1
1.1 Model Description 1.0-11
1.1.1 Unique Support Structure (USS) Component Model 1.0-11
1.1.2 Vacuum Case (VC) Component Model 1.0-12
1.1.3 Payload Attach System (PAS) Component Model 1.0-12
1.1.4 Shuttle and ISS Integration Hardware Component Models 1.0-12
1.2 Loading Conditions 1.0-13
1.3 Factors of Safety 1.0-15
1.4 Materials and Temperature 1.0-16
1.5 Fracture Assessment 1.0-17
2.0 Strength and Stability Assessment of USS-02 Assembly 2.0-1
2.1 Upper USS-02 Assembly 2.1-1
2.1.1 Upper Vacuum Case Interface Joint 2.1.1-1
2.1.2 Upper Trunnion Bridge Beam Assembly 2.1.2-1
2.1.3 Sill Joint 2.1.3-1
2.1.4 Sill Pin 2.1.4-1
2.1.5 Sill Trunnion 2.1.5-1
2.1.6 Sill Plate 2.1.6-1
2.1.7 Lower Trunnion Bridge Beam Elbow 2.1.7-1
2.1.8 Lower Trunnion Bridge Beam Assembly 2.1.8-1
2.1.9 Lower Vacuum Case Interface Joint 2.1.9-1
2.1.10 Sill Bracket 2.1.10-1
2.1.11 Sill Tube 2.1.11-1
2.1.12 Diagonal Sill Bracket 2.1.12-1
2.1.13 Diagonal Strut Assy 2.1.13-1
2.1.13.1 Diagonal Strut Tube 2.1.13.1-1
2.1.13.2 Diagonal Strut Endfitting 2.1.13.2-1
2.1.13.3 Rod-end Bearing 2.1.13.3-1
2.1.14 Clevis Pin 2.1.14-1
2.1.14.1 Clevis Pin (Sill Tube Side) 2.1.14.1-1
2.1.14.2 Clevis Pin (Vacuum Case Side) 2.1.14.2-1
2.1.15 WIF Adapter Bracket 2.1.15-1
2.2 Lower USS-02 Assembly 2.2-1
2.2.1 Primary Centerbody Box Joint 2.2.1-1
2.2.2 Secondary Centerbody Box Joint 2.2.2-1
2.2.3 EMC Box Tube 2.2.3-1
2.2.4 Lower USS to Upper USS Joint 2.2.4-1
2.2.5 RICH Mounting Bracket 2.2.5-1
2.2.6 Lower Angle Beam Assembly 2.2.6-1
2.2.7 PAS RICH Bracket 2.2.7-1
2.2.8 Lower Angle Beam Flange 2.2.8-1
2.3 Keel Assembly 2.3-1
2.3.1 Keel Angle Joint 2.3.1-1
2.3.2 Keel Block 2.3.2-1
2.3.3 Keel Tube 2.3.3-1

2.3.4 Keel Trunnion 2.3.4-1
2.3.5 Keel Retainer 2.3.5-1
2.4 USS-02 Bolt and Shear Pin and Bushing Strength Assessment 2.4-1
2.4.1 Upper USS-02 Bolted Interfaces 2.4.1-1
2.4.1.1 Upper Interface Plate to USS-02 ..... 2.4.1.1-1
2.4.1.2 Lower Interface Plate to USS-02 ..... 2.4.1.2-1
2.4.1.3 TRD Corner Bracket to Upper Vacuum Case Joint 2.4.1.3-1
2.4.1.4 Sill Bracket to Sill Joint 2.4.1.4-1
2.4.1.5 Diagonal Sill Bracket to Sill Joint 2.4.1.5-1
2.4.1.6 WIF to Sill Tube Bolted Interfaces 2.4.1.6-1
2.4.1.6.1 WIF Adaptor Plate to Sill Tube 2.4.1.6.1-1
2.4.1.6.2 WIF Socket to WIF Adaptor Plate 2.4.1.6.2-1
2.4.1.7 Bushing Plate to Upper and Lower USS-02 Vacuum Case Joint 2.4.1.7-1
2.4.1.8 Sill Plate to USS-02 Sill Joint 2.4.1.8-1
2.4.2 Lower USS-02 Bolted Interfaces 2.4.2-1
2.4.2.1 Lower USS to Upper USS 2.4.2.1-1
2.4.2.2 Lower Angle Beam Flange to Centerbody Box Joint 2.4.2.2-1
2.4.3 Keel Assembly Bolted Interfaces 2.4.3-1
2.4.3.1 Keel Angle Joint to Lower USS Assembly 2.4.3.1-1
2.4.3.2 Keel Retainer to Keel Trunnion and Keel Block 2.4.3.2-1
2.5 USS-02 Rivet Strength Assessment 2.5-1
2.5.1 Upper USS-02 Riveted Joints 2.5.1-1
2.5.1.1 Upper Vacuum Case Joint to Upper Trunnion Bridge 2.5.1.1-1
2.5.1.2 Lower Trunnion Bridge Beam Elbow to Sill Joint 2.5.1.2-1
2.5.1.3 Sill Bracket to Sill Tube 2.5.1.3-1
2.5.1.4 Diagonal Sill Bracket to Sill Tube 2.5.1.4-1
2.5.1.5 Diagonal Strut Tube to Diagonal Strut End Fitting 2.5.1.5-1
2.5.1.6 Upper Trunnion Bridge Beam to Sill Joint 2.5.1.6-1
2.5.1.7 Lower Trunnion Bridge Beam to Lower Trunnion Bridge Beam Elbow 2.5.1.7-1
2.5.1.8 Lower Trunnion Bridge Beam to Lower Vacuum Case Joint 2.5.1.8-1
2.5.2 Lower USS-02 Riveted Joints 2.5.2-1
2.5.2.1 Lower USS-02 to Upper USS-02 to Lower Angle Beam 2.5.2.1-1
2.5.2.2 Lower Angle Beam to Lower Angle Flange Beam Flange 2.5.2.2-1
2.5.2.3 EMC Box Tubes to Centerbody Joints 2.5.2.3-1
2.5.2.4 RICH Bracket to EMC Box Tubes 2.5.2.4-1
2.5.2.5 RICH PAS Brackets to EMC Box Tubes 2.5.2.5-1
2.5.3 Keel Assembly Riveted Joints 2.5.3-1
2.5.3.1 Keel Angle Joint to Keel Tube 2.5.3.1-1
2.5.3.2 Keel Tube to Keel Block 2.5.3.2-1
3.0 Strength and Stability Assessment of Vacuum Case Assembly 3.0-1
3.1 Upper and Lower Conical Flange Assembly 3.1-1
3.1.1 Conical Flange Assembly Strength Assessment 3.1.1-1
3.1.2 Conical Flange Stability Assessment 3.1.2-1
3.2 Outer Cylinder 3.2-1
3.2.1 Outer Cylinder Strength Assessment 3.2.1-1
3.2.2 Outer Cylinder Stability Assessment 3.2.2-1
3.3 Inner Cylinder 3.3-1
3.3.1 Inner Cylinder Strength Assessment 3.3.1-1
3.3.2 Inner Cylinder Stability Assessment 3.3.2-1
3.4 Upper Support Ring 3.4-1
3.5 Lower Support Ring 3.5-1
3.6 Upper Interface Plate Assembly 3.6-1
3.7 Lower Interface Plate Assembly 3.7-1
3.8 Clevis Plate 3.8-1
3.9 Feedthru Port Cover Plate 3.9-1
3.10 Vacuum Case Bolted Interfaces 3.10-1

3.10.1 Upper Support Ring to Conical Flange 3.10.1-1
3.10.2 Lower Support Ring to Conical Flange 3.10.2-1
3.10.3 Upper Support Ring to Outer Cylinder 3.10.3-1
3.10.4 Lower Support Ring to Outer Cylinder Bolted Interface 3.10.4-1
3.10.4.1 Lower Support Ring to Outer Cylinder 3.10.4.1-1
3.10.4.2 Lower Support Ring to Outer Cylinder - .3125" 3.10.4.2-1
3.10.5 Clevis Plate to Upper Support Ring 3.10.5-1
3.10.6 Upper Interface Plate to Vacuum Case 3.10.6-1
3.10.7 Lower Interface Plate to Vacuum Case Bolted Interface 3.10.7-1
3.10.7.1 Lower Interface Plate to Vacuum Case - .375" 3.10.7.1-1
3.10.7.2 Lower Interface Plate to Vacuum Case - .500" 3.10.7.2-1
4.0 Strength Assessment of Payload Attach System Assembly 4.0-1
4.1 Vertex Bracket 4.1-1
4.2 Aft Bracket 4.2-1
4.3 PAS Platform Assembly 4.3-1
4.4 Guide Pins 4.4-1
4.5 BCS Avionics Bracket 4.5-1
4.6 PAS Bridge Bracket 4.6-1
4.7 Bridge Flat Bearing 4.7-1
4.8 Bridge Pin 4.8-1
4.9 Bridge Assembly 4.9-1
4.10 Bearing Housing 4.10-1
4.11 Capture Bar Assembly 4.11-1
4.11.1 Capture Bar 4.11.1-1
4.11.2 Handle Base 4.11.2-1
4.11.3 Handle Extension Assembly 4.11.3-1
4.11.4 Handle 4.11.4-1
4.12 PAS Bolt Analysis 4.12-1
4.12.1 Handle Assembly Bolted Interfaces 4.12.1-1
4.12.2 PAS Handle to PAS Handle Extension 4.12.2-1
4.12.3 Handle Extension to Handle Base 4.12.3-1
4.12.4 Handle Base to Capture Bar 4.12.4-1
4.12.5 PAS Guide Pin Bolted Interface 4.12.5-1
4.12.5.1 PAS Guide Pin to PAS Base 4.12.5.1-1
4.12.6 Vertex Bracket to PAS Platform Bolted Interface 4.12.6-1
4.12.6.1 Vertex Bracket to PAS Platform 4.12.6.1-1
4.12.6.2 Vertex Bracket to PAS Platform Shear Bolt Analysis 4.12.6.2-1
4.12.7 Aft Brackets to PAS Platform Bolted Interface 4.12.7-1
4.12.7.1 Aft Brackets to PAS Platform 4.12.7.1-1
4.12.7.2 Aft Brackets to PAS Platform Shear Bolt Analysis 4.12.7.2-1
4.12.8 BCS Avionics Bracket to PAS Platform Bolt Analysis 4.12.8-1
4.12.9 Vertex Bracket to Lower USS-02 Bolted Interface 4.12.9-1
4.12.9.1 Vertex Bracket to Lower USS-02 Assembly 4.12.9.1-1
4.12.10 Aft Bracket to Lower USS-02 Bolted Interface 4.12.10-1
4.12.10.1 Aft Brackets to Lower USS-02 Assembly 4.12.10.1-1
4.13 PAS Nonstructural Items 4.13-1
5.0 Strength Assessment of AMS-02 STS and ISS Integration Hardware 5.0-1
5.1 UMA Bracket 5.1-1
5.2 PVGF Bracket 5.2-1
5.3 Intentionally Left Blank 5.3-1
5.4 FRGF Bracket 5.4-1
5.5 ROEU Assembly 5.5-1
5.5.1 ROEU Clevis Assembly Bending Analysis 5.5.1-1
5.6 Intentionally Left Blank 5.6-1
5.7 Intentionally Left Blank 5.7-1
5.8 Scuff Plate 5.8-1

5.9 EVA Connector Panel Assembly 5.9-1
5.10 Debris Shield Analysis 5.10-1
5.10.1 Port Debris Shield Assembly 5.10.1-1
5.10.1.1 Port Debris Shield Assembly Bolt Analysis 5.10.1.1-1
5.10.2 Starboard Debris Shield Assembly 5.10.2-1
5.10.2.1 Starboard Debris Shield Assembly Bolt Analysis 5.10.2.1-1
5.10.3 TRD Gas Ballistic Cover Assembly and Bolt Analysis 5.10.3-1
5.11 STS and ISS Integration Hardware Bolt Analysis 5.11-1
5.11.1 Intentionally Left Blank 5.11.1-1
5.11.2 PVGF to PVGF Bracket 5.11.2-1
5.11.3 PVGF Bracket to Upper Trunnion Bridge Beam 5.11.3-1
5.11.4 FRGF to FRGF Bracket 5.11.4-1
5.11.5 FRGF Bracket to Upper Trunnion Bridge Beam 5.11.5-1
5.11.6 ROEU Fastener Analysis 5.11.6-1
5.11.6.1 ROEU Arm Flange to Sill Joint 5.11.6.1-1
5.11.6.2 ROEU Bearing Failure Analysis 5.11.6.2-1
5.11.6.3 ROEU PDA Bracket, Pin, and Lug Analysis 5.11.6.3-1
5.11.6.4 ROEU Assembly Harness Bracket and Bolt Analysis 5.11.6.4-1
5.11.7 Intentionally Left Blank 5.11.7-1
5.11.8 Intentionally Left Blank 5.11.8-1
5.11.9 Scuff Plate to Sill Joint Bolt Analysis 5.11.9-1
5.11.10 Intentionally Left Blank 5.11.10-1
5.11.11 Interface Panel A to USS-02 Trunnion Bridge Beam 5.11.11-1
5.12 Handle Brackets 5.12-1
5.12.1 Handle Brackets 5.12.1-1
5.12.2 Handle Bracket Bolt Analysis 5.12.2-1
5.13 Interface Panel A 5.13-1
6.0 Miscellaneous Analysis 6.0-1
6.1 Vacuum Case Cable Brackets 6.1-1

0.3 Minimum Margins of Safety

TABLE 0.3.1-1 USS-02 Minimum Margin of Safety Summary

Part / Dwg number	Part Name / Description	Material & Heat Treatment	Critical Load Condition	Failure Mode	Minimum Margin of Safety	Reference Page	Comments
Upper VC Joints SDG39135727	Upper VC Joints	AL ALY 7050-T7451	Launch	Tension	0.035 (u)	2.1.1-10	
Upper Trunnion Bridge Beam SDG39135728	Upper Trunnion Bridge Beam	AL ALY 7075-T73511	Abort Landing	Buckling Combined Tension, Bending, Shear	1.64 (u)	2.1.2-9	Max Stress Ratio of ends A & B
Upper Trunnion Bridge Beam SDG39135728	Upper Trunnion Bridge Beam	AL ALY 7075-T73511	Abort Landing	Combined Tension, Bending, Shear	2.27 (u)	2.1.2-15	Sill Side; Moment about Y axis
Upper Trunnion Bridge Beam SDG39135728	Upper Trunnion Bridge Beam	AL ALY 7075-T73511	Abort Landing	Combined Tension, Bending, Shear	3.33 (u)	2.1.2-21	Sill Side: Moment about Z axis
Upper Trunnion Bridge Beam SDG39135728	Upper Trunnion Bridge Beam	AL ALY 7075-T73511	Abort Landing	Combined Tension, Bending, Shear	1.28 (u)	2.1.2-28	Upper Vac. Case Side, My
Upper Trunnion Bridge Beam SDG39135728	Upper Trunnion Bridge Beam	AL ALY 7075- 7075-T73511	Launch	Combined Tension, Bending, Shear	3.89 (u)	2.1.2-34	Upper Vac. Case Side, Mz
USS-02 Sill Joint SDG39135730	USS-02 Sill Joint	AL ALY 7050-T7451	Abort Landing	Ultimate	0.55 (u)	2.1.3-10	Stresses in solid hex elements

Part / Dwg number	Part Name / Description	Material & Heat Treatment	Critical Load Condition	Failure Mode	Minimum Margin of Safety	Reference Page	Comments
USS-02 Sill Joint SDG39135730	USS-02 Sill Joint	AL ALY 7050-T7451	Abort Landing	Bearing	4.724 (u)	2.1.3-17	Sill Joint Bearing
USS-02 Sill Pin SDG39135731	USS-02 Sill Pin	Custom 455 Steel H1000 condition	Launch	Shear	0.51 (u)	2.1.4-4	
USS-02 Sill Trunnion SDG39135732	USS-02 Sill Trunnion	Custom 455 Steel H1000 condition AMS5617	Launch	Combined Tension, Bending, Shear	1.08 (y)	2.1.5-8	
USS-02 Sill Trunnion SDG39135732	USS-02 Sill Trunnion	Custom 455 Steel H1000 condition AMS5617	Launch	Combined Tension, Bending, Shear	1.26 (u)	2.1.5-9	
USS-02 Sill Trunnion SDG39135732	USS-02 Sill Trunnion	Custom 455 Steel H1000 condition AMS5617	Launch	Combined Tension, Bending, Shear	1.12 (y)	2.1.5-10	
USS-02 Sill Trunnion SDG39135732	USS-02 Sill Trunnion	Custom 455 Steel H1000 condition AMS5617	Launch	Combined Tension, Bending, Shear	0.949 (y)	2.1.5-14	Case 1 Max Bending at Y=88.075
USS-02 Sill Trunnion SDG39135732	USS-02 Sill Trunnion	Custom 455 Steel H1000 condition AMS5617	Launch	Combined Tension, Bending, Shear	1.33 (u)	2.1.5-16	Case 2 Max Shear at Y=85.288

Part / Dwg number	Part Name / Description	Material & Heat Treatment	Critical Load Condition	Failure Mode	Minimum Margin of Safety	Reference Page	Comments
USS-02 Sill Trunnion SDG39135732	USS-02 Sill Trunnion	Custom 455 Steel H1000 condition AMS5617	Launch	Combined Tension, Bending, Shear	1.3 (y)	2.1.5-17	Case 3 edge of socket Y=89.0
USS-02 Sill Trunnion SDG39135732	USS-02 Sill Trunnion	Custom 455 Steel H1000 condition AMS5617	Abort Landing	Combined Tension, Bending, Shear	1.15 (y)	2.1.5-21	
USS-02 Sill Trunnion SDG39135732	USS-02 Sill Trunnion	Custom 455 Steel H1000 condition AMS5617	Abort Landing	Combined Tension, Bending, Shear	1.2 (y)	2.1.5-23	Section check at Y=91.5
USS-02 Sill Trunnion SDG39135732	USS-02 Sill Trunnion	Custom 455 Steel H1000 condition AMS5617	Abort Landing	Combined Tension, Bending, Shear	1.017 (y)	2.1.5-28	Section check at Y=88.075
USS-02 Sill Trunnion SDG39135732	USS-02 Sill Trunnion	Custom 455 Steel H1000 condition AMS5617	Abort Landing	Combined Tension, Bending, Shear	1.41 (u)	2.1.5-30	Section check at Y=85.288
USS-02 Sill Trunnion SDG39135732	USS-02 Sill Trunnion	Custom 455 Steel H1000 condition AMS5617	Abort Landing	Combined Tension, Bending, Shear	1.38 (y)	2.1.5-31	Section check at Y=89.0
USS-02 Sill Trunnion SDG39135732	USS-02 Sill Trunnion	Custom 455 Steel H1000 condition AMS5617	Nominal Landing	Combined Tension, Bending, Shear	0.71 (y)	2.1.5-35	

Part / Dwg number	Part Name / Description	Material & Heat Treatment	Critical Load Condition	Failure Mode	Minimum Margin of Safety	Reference Page	Comments
USS-02 Sill Trunnion SDG39135732	USS-02 Sill Trunnion	Custom 455 Steel H1000 condition AMS5617	Nominal Landing	Combined Tension, Bending, Shear	0.74 (y)	2.1.5-37	Section check at Y=91.5
USS-02 Sill Trunnion SDG39135732	USS-02 Sill Trunnion	Custom 455 Steel H1000 condition AMS5617	Nominal Landing	Combined Tension, Bending, Shear	0.599 (y)	2.1.5-42	Section check at Y=88.075
USS-02 Sill Trunnion SDG39135732	USS-02 Sill Trunnion	Custom 455 Steel H1000 condition AMS5617	Nominal Landing	Combined Tension, Bending, Shear	0.92 (u)	2.1.5-44	Section check at Y=85.288
USS-02 Sill Trunnion SDG39135732	USS-02 Sill Trunnion	Custom 455 Steel H1000 condition AMS5617	Nominal Landing	Combined Bending, Shear	0.89 (y)	2.1.5-45	Section check at Y=89.0
Bridge Beam Elbow, Lower Trunnion (in between Sill Joint & Lower Trunnion) SDG39135734	Bridge Beam Elbow, Lower Trunnion (in between Sill Joint & Lower Trunnion)	AL ALY 7050-T7451	Abort Case 2015	Tension	1.97 (u)	2.1.7-22	
USS-02 Lower Trunnion Bridge Beam SDG39135735	USS-02 Lower Trunnion Bridge Beam	AL ALY 7075-T73511	Nominal Landing	Buckling Combined compression, Bending, Shear	1.42 (u)	2.1.8-9	
USS-02 Lower Trunnion Bridge Beam SDG39135735	USS-02 Lower Trunnion Bridge Beam	AL ALY 7075-T73511	Nominal Landing	Combined Tension, Bending, Shear	1.87 (u)	2.1.8-15	Moment about Y axis

Part / Dwg number	Part Name / Description	Material & Heat Treatment	Critical Load Condition	Failure Mode	Minimum Margin of Safety	Reference Page	Comments
USS-02 Lower Trunnion Bridge Beam SDG39135735	USS-02 Lower Trunnion Bridge Beam	AL ALY 7075-T73511	Nominal Landing	Combined Tension, Bending, Shear	3.14 (u)	2.1.8-21	Moment about Z axis
USS-02 Lower Trunnion Bridge Beam SDG39135735	USS-02 Lower Trunnion Bridge Beam	AL ALY 7075-T73511	Nominal Landing	Combined Tension, Bending, Shear	2.15 (u)	2.1.8-28	Moment about Y axis
USS-02 Lower Trunnion Bridge Beam SDG39135735	USS-02 Lower Trunnion Bridge Beam	AL ALY 7075-T73511	Nominal Landing	Combined Tension, Bending, Shear	2.13 (u)	2.1.8-34	Moment about Z axis
Interface Joint Assembly, Lower VC, Lower USS-02 Assembly SDG39135737	Interface Joint Assembly, Lower VC, Lower USS-02 Assembly	AL ALY 7050-T7451	Nominal Landing	Max Principal Stress	0.06 (u)	2.1.9-13	
Sill Bracket mounting plate (from Sill Tube to Sill Joint) SDG39135738	Sill Bracket mounting plate (from Sill Tube to Sill Joint)	AL ALY 7050-T7451	Launch	Combined Tension, Bending, Shear	0.40 (u)	2.1.10-8	
Sill Bracket Tube SDG39135739	Sill Bracket Tube	AL ALY 7050-T7451	Launch	Combined Tension, Bending, Shear	1.16 (u)	2.1.10-10	
Sill Tube SDG39135739-301	Sill Tube	AL ALY 7075-T73511	Launch	Buckling Combined compression, Bending, Shear	4.267 (u)	2.1.11-7	

Part / Dwg number	Part Name / Description	Material & Heat Treatment	Critical Load Condition	Failure Mode	Minimum Margin of Safety	Reference Page	Comments
Diagonal Sill Bracket SDG39135740	Diagonal Sill Bracket	AL ALY 7050-T7451	Launch	Lug axial and transverse loads	0.411 (u)	2.1.12-13	
Diagonal Sill Bracket SDG39135740	Diagonal Sill Bracket	AL ALY 7050-T7451	Launch	Shear Pull-Thru at bolt hole	3.493 (u)	2.1.12-16	
Diagonal Strut Tube SDG39135742	Diagonal Strut Tube	AL ALY 6061-T6511	Launch	Compression	0.58 (u)	2.1.13.1-5	
Diagonal Strut End Fitting SDG39135743	Diagonal Strut End Fitting	AL ALY 7075-T73511	Launch	Thread Shear	0.58 (u)	2.1.13.2-5	
Clevis Pin for Diagonal Sill Bracket SDG39135744	Clevis Pin for Diagonal Sill Bracket	Custom 455 H1000, AMS5617	Launch	Combined Bending & Shear	0.262 (u)	2.1.14.1-5	
Clevis Pin for Vacuum Case Side SDG39135744-003	Clevis Pin for Vacuum Case Side	Custom 455 H1000, AMS5617	Launch	Combined Bending & Shear	0.832 (u)	2.1.14.2-6	
Diagonal Strut Rod-End Bearing SDG39135745	Diagonal Strut Rod-End Bearing	CRES 15-5PH Stainless Steel, 1025 condition	Launch	Bearing	0.406 (u)	2.1.13.3-4	

Part / Dwg number	Part Name / Description	Material & Heat Treatment	Critical Load Condition	Failure Mode	Minimum Margin of Safety	Reference Page	Comments
WIF Adapter Plate SDG39135747	WIF Adapter Plate	AL ALY 6061-T6511	On-Orbit	Tension	0.447 (u)	2.1.15-10	
Lower Center Body Assembly SDG39135759	Lower Center Body Assembly	AL ALY 7050-T7451	Abort Landing	Tension	0.185 (u)	2.2.1-14	
EMC Box Tube SDG39135761	EMC Box Tube	AL ALY 7075-T3511	Launch	Buckling Combined compression , shear and bending	1.76 (u)	2.2.3-9	
Lower USS-02 to Upper USS-02 SDG39135762	Lower USS-02 to Upper USS-02	AL ALY 7050-T7451	Launch	Max Principal Stress	1.15 (u)	2.2.4-16	
Lower USS-02 to Upper USS-02 SDG39135762	Lower USS-02 to Upper USS-02	AL ALY 7050-T7451	Abort Landing	Max Principal Stress	1.38(u)	2.2.4-19	
Lower USS-02 to Upper USS-02 plate section SDG39135762	Lower USS-02 to Upper USS-02 plate section	AL ALY 7050-T7451	Launch	Tension ultimate	3.2 (u)	2.2.4-23	
Lower USS-02 to Upper USS-02 plate section SDG39135762	Lower USS-02 to Upper USS-02 plate section	AL ALY 7050-T7451	Abort Landing	Tension ultimate	3.52 (u)	2.2.4-26	

Part / Dwg number	Part Name / Description	Material & Heat Treatment	Critical Load Condition	Failure Mode	Minimum Margin of Safety	Reference Page	Comments
RICH Bracket SDG39135762	RICH Bracket	AL ALY 7050-T7451	Nominal Landing	Max Principal Stress	0.90 (u)	2.2.5-13	
Lower Angle Beam SDG39135764	Lower Angle Beam	AL ALY 7075-T3511	Nominal Landing	Buckling Combined compression, shear and Bending	2.50 (u)	2.2.6-9	
PAS-RICH Brackets SDG39135766	PAS-RICH Brackets	AL ALY 7050-T7451	On-Orbit	Max Principal Stress	0.12 (u)	2.2.7-13	
Lower Angle Beam Flange SDG39135767	Lower Angle Beam Flange	AL ALY 7050-T7451	Abort Landing	Max Principal Stress	0.185 (u)	2.2.8-3	
Keel Angle Joint SDG39135769	Keel Angle Joint	AL ALY 7050-T7451	Abort Landing	Max Principal Stress	1.599 (u)	2.3.1-4	
Keel Block SDG39135770	Keel Block	AL ALY 7050-T7451	Launch	Max Principal Stress	0.63 (u)	2.3.2-13	

Part / Dwg number	Part Name / Description	Material & Heat Treatment	Critical Load Condition	Failure Mode	Minimum Margin of Safety	Reference Page	Comments
Keel Tube SDG39135771	Keel Tube	AL ALY 7075-T3511	Worst Launch Case From Sort	Buckling Combined compression, Shear and bending	1.93 (u)	2.3.3-7	
Keel Trunnion SDG39135772	Keel Trunnion	Custom 455 Steel, H1000 bar AMS5617	Launch	Combined Tension, Bending, Shear	0.51 (y)	2.3.4-12	
Keel Retainer SDG39135772	Keel Retainer	15-5PH (H1025)	Launch	Principal stress	1.261 (u)	2.3.5-11	

Notes:

1. Factors of Safety are 1.4 for Ultimate and 1.1 for Yield.
2. u = ultimate, y = yield

TABLE 0.3.1-2 Upper USS-02 Fasteners Minimum Margin of Safety Summary

Part / Dwg number	Part Name / Description	Material & Heat Treatment	Critical Load Condition	Failure Mode	Minimum Margin of Safety	Reference Page	Comments
SDG39135892-805 NAS1958C15	Bolts from Upper Vacuum Case Interface Plate to USS	A286	Abort Landing LC2035	Total Tension Yield	0.033 (y)	2.4.1.1-11	
SDG39135892-811 NAS1958C17	Bolts from Lower Vacuum Case Interface Plate to USS	A286	Abort Landing LC2031	Total Tension Yield	0.046 (y)	2.4.1.2-11	
NAS1958C24	Bolts from Upper Vacuum Case Joint to TRD Corner Bracket	A286	Launch	Total Tension Yield	0.095 (y)	2.4.1.3-13	
SDG39135892-815 NAS1958C13	Bolts from Sill Bracket to Sill Joint	A286	Launch	Total Tension Yield	0.065 (y)	2.4.1.4-11	
EWB 0420-8-16	Bolts from Diagonal Sill Bracket to Sill Joint	A286	Launch	Joint Separation	-0.157	2.4.1.5-11	Fatigue analysis shows that at 92% of loads M.S. is positive
NAS1953C6	Bolts from WIF Adapter Plate to Sill Tube	A286	On-Orbit	Joint Separation	-0.269	2.4.1.6.1-7	3 out of 12 bolts are negative. Acceptable since loads are non cyclic
NAS1954C6	Bolts from WIF Adapter Plate to side mounted WIF	A286	Launch	Total Tension Yield	0.003 (y)	2.4.1.6.2-7	

Part / Dwg number	Part Name / Description	Material & Heat Treatment	Critical Load Condition	Failure Mode	Margin of Safety	Reference Page	Comments
NAS1352N02-6	Bolts from Bushing Plate to Vacuum Case Joint	A286	40 g	Total Tension Yield	0.196 (y)	2.4.1.7-6	
NAS1102E04-6	Bolts from Sill Plate to Sill Joint	A286	40 g	Total Tension Yield	0.162 (y)	2.4.1.8-6	
NAS1958C15	Bolts from Lower USS-02 to Upper USS-02	A286	Nominal Landing	Total Tension Yield	0.033 (y)	2.4.2.1-11	
EWB 0420-8-13	Bolts from Lower Angle Beam Flange to Centerbody Box Joint	A286	Abort Landing	Total Tension Yield	0.055 (y)	2.4.2.2-11	
EWB 0420-8	Bolts from Keel Angle Joint to Lower USS-02 Assembly	A286	Nominal Landing	Total Thread Shear Ultimate	0.068 (y)	2.4.3.1-11	
NAS8103PU8	Bolts from Keel Retainer to Keel Trunnion	A286	Nominal Landing	Total Tension Yield	0.076 (y)	2.4.3.2-7	
HTH1978-3-3	Bolts from Keel Retainer to Keel Block	A286	Nominal Landing	Total Tension Yield	0.131 (y)	2.4.3.2-16	

.
Notes:

1. Factors of Safety are 1.4 for Ultimate and 1.1 for Yield.
2. u = ultimate, y = yield

TABLE 0.3.1-3 Upper USS-02 Rivets Minimum Margin of Safety Summary

Part / Dwg number	Part Name / Description	Material & Heat Treatment	Critical Load Condition	Failure Mode	Minimum Margin of Safety	Reference Page	Comments
NAS1398 typeM 0.25" blind	Upper VC to Upper Trunnion bridge rivets	Monel	Nominal Landing	Total Shear	0.171 (u)	2.5.1.1-14	
NAS1398 type M 0.25" blind	Lower Trunnion Bridge Beam Elbow to Sill Joint Rivets	Monel	Abort Landing	Total Shear	0.025 (u)	2.5.1.2-14	
NAS1398 type D 0.25" blind	Sill Bracket to Sill Tube	AL 2017	Launch	Total Shear	1.253 (u)	2.5.1.3-14	
NAS1398 type D 0.25" blind	Diagonal Sill Bracket to Sill Tube Rivet Analysis	AL 2017	Launch	Total Shear	2.75 (u)	2.5.1.4-14	
NAS1398 type M 0.25" blind	Diagonal Strut Tube to Diagonal Strut End fitting	Monel	Launch	Total Shear	0.37 (u)	2.5.1.5-4	
NAS1398 type M 0.25" blind	Upper Trunnion Bridge Beam to Sill Joint Rivet Analysis	Monel	Nominal Landing	Total Shear	0.275 (u)	2.5.1.6-14	
NAS1398 type M 0.25" blind	Lower Trunnion Bridge Beam to Lower Trunnion Bridge Beam Elbow Rivets	Monel	Nominal Landing	Total Shear	0.213 (u)	2.5.1.7-14	
NAS1398 type M 0.25" blind	Lower Trunnion Bridge Beam to Lower Vacuum Case Joint	Monel	Nominal Landing	Total Shear	0.137 (u)	2.5.1.8-14	

Part / Dwg number	Part Name / Description	Material & Heat Treatment	Critical Load Condition	Failure Mode	Minimum Margin of Safety	Reference Page	Comments
NAS1398 type D 0.25” blind	Lower Angle Beam to Lower to Upper USS-02 Joint	AL 2017	Nominal Landing	Total Shear	0.972 (u)	2.5.2.1-14	
NAS1398 type D 0.25” blind	Lower Angle Beam to Lower Angle Beam Flange Rivets	AL 2017	Nominal Landing	Total Shear	0.421 (u)	2.5.2.2-14	
NAS1398M8 0.25” blind	EMC Box Tube to Centerbody Joint Rivet	Monel	Launch	Total Shear	0.146 (u)	2.5.2.3-16	
NAS1398M8-9 0.25” blind	RICH Bracket Rivets	Monel	Nominal Landing	Total Shear	3.36 (u)	2.5.2.4-13	
NAS1398M8-9 0.25” blind	PAS RICH Bracket Rivets	Monel	On-Orbit	Total Shear	0.27 (u)	2.5.2.5-14	
NAS1398 type D 0.25” blind	Keel Angle Joint to Keel Tube Rivets	AL 2017	Launch	Total Shear	0.76 (u)	2.5.3.1-14	
NAS1398DFC8-9	Keel Block to Keel Tube Rivets	Al 2017	Launch	Total Shear	0.893 (u)	2.5.3.2-13	

Notes:

1. Factors of Safety are 1.4 for Ultimate and 1.1 for Yield.
2. u = ultimate, y = yield

TABLE 0.3.1-4 Vacuum Case Minimum Margin of Safety Summary

Part / Dwg number	Part Name / Description	Material & Heat Treatment	Critical Load Condition	Failure Mode	Minimum Margin of Safety	Reference Page	Comments
Vacuum Case - Conical Flange SEG39135778	Vacuum Case - Conical Flange Stability Assessment	AL ALY 2219-T62	Launch	Yield	0.14	3.1.1-14	
Vacuum Case - Conical Flange SEG39135778	Vacuum Case - Conical Flange	AL ALY 2219-T62	Pressure Case 0.8 atm (11.76 psi)	Buckling	0.05	3.1.2-8	
Vacuum Case Outer Cylinder SDG39135779	Vacuum Case Outer Cylinder	AL ALY 7050-T7451 Rolled Ring Forging	Abort Landing	Ultimate	1.321	3.2.1-14	
Vacuum Case Outer Cylinder SDG39135779	Vacuum Case Outer Cylinder Stability Assessment	AL ALY 7050-T7451 Rolled Ring Forging	Abort Landing	Buckling	0.11	3.2.2-8	
Vacuum Case Outer Cylinder SDG39135779	Vacuum Case Outer Cylinder SDG39135779	--------	Abort Landing	Max. principal stress -26373 psi FS = 2.0	-----	--------	No buckling at FS =2.0 Closes RID AMS-CDR-1-13
Vacuum Case Inner Cylinder SDG39135781	Vacuum Case Inner Cylinder	AL ALY 2219 T852 Hand Forged	Launch LC1045	Ultimate	0.311 (u)	3.3.1-17	
Vacuum Case Inner Cylinder close out weld SDG39135781	Vacuum Case Inner Cylinder	AL ALY 2219 T852 Hand Forged	Launch LC1045	Ultimate	0.116 (u)	3.3.1-20	
Vacuum Case Inner Cylinder SDG39135781	Vacuum Case Inner Cylinder	AL ALY 2219 T852 Hand Forged	Hydrostatic Compression 0.8 atm.(11.76 psi)	Buckling	0.194 (u)	3.3.2-8	

Part / Dwg number	Part Name / Description	Material & Heat Treatment	Critical Load Condition	Failure Mode	Minimum Margin of Safety	Reference Page	Comments
Upper Support Ring SDG39135786	Upper Support Ring	AL ALY 7050-T7451	Launch LC1007	Yield	0.035 (y)	3.4-26	
Lower Support Ring SDG39135785	Lower Support Ring	AL ALY 7050-T7451	Launch LC1007	Yield	0.035 (y)	3.5-2	Analysis is Enveloped by Upper Support Ring
Upper Interface Plate Assembly SDG39135788	Upper Interface Plate Assembly	AL ALY 7050-T7451	Abort Landing	Ultimate	0.96 (u)	3.6-5	
Lower Interface Plate Assembly SDG39135789	Lower Interface Plate Assembly	AL ALY 7050-T7451	Abort Landing	Ultimate	2.36 (u)	3.7-5	
Vacuum Case Clevis Plate SDG39135790	Vacuum Case Clevis Plate	A286	Launch LC1032	Yield	1.49 (y)	3.8-8	
VC Feed-thru-port Cover Plate SDG39135791	VC Feed-thru-port Cover Plate	AL ALY 6061-T651	Launch/ Landing Plus Pressure	Tension	25.9 (u)	3.9-39	

Notes:

1. Factors of Safety are 1.4 for Ultimate and 1.1 for Yield.
2. u = ultimate, y = yield

TABLE 0.3.1-5 Vacuum Case Fastener Minimum Margin of Safety Summary

Part / Dwg number	Part Name / Description	Material & Heat Treatment	Critical Load Condition	Failure Mode	Minimum Margin of Safety	Reference Page	Comments
NAS1351N3H16	Bolts from Vacuum Case Feed-thru-port Cover Plate to Vacuum Case Support Ring	A286	Launch / Landing Plus Pressure	Total Tension Yield	0.131 (y)	3.9-14	
EWB 0420-4H-9	Bolts from Conical Flange to Upper Support Ring	A286	Landing LC2003	Total Tension Yield	0.079 (y)	3.10.1-6	
EWB 0420-4H-9	Bolts from Conical Flange to Lower Support Ring	A286	Landing LC2027	Total Tension Yield	0.077 (y)	3.10.2-6	
EWB 0420-4H-13	Bolts from Outer Cylinder to Upper Support Ring	A286	Landing LC2038	Total Tension Yield	0.078 (y)	3.10.3-7	
EWB 0420-4H-7	Bolts from Outer Cylinder to Upper Support Ring	A286	Landing LC2057	Total Tension Yield	0.067 (y)	3.10.3-15	
EWB 0420-4H-7	Bolts from Outer Cylinder to Lower Support Ring	A286	Landing LC2053	Total Tension Yield	0.071 (y)	3.10.4.1-7	
EWB 0420-4H-13	Bolts from Outer Cylinder to Lower Support Ring	A286	Landing LC2054	Total Tension Yield	0.075 (y)	3.10.4.1-15	
EWB 0420-5H-7	Bolts Outer Cylinder to from Lower Support Ring	A286	Landing LC2031	Total Tension Yield	0.090 (y)	3.10.4.2-7	

Part / Dwg number	Part Name / Description	Material & Heat Treatment	Critical Load Condition	Failure Mode	Margin of Safety	Reference Page	Comments
NAS1958C9	Bolts from Clevis Plate to Upper Support Ring	A286	Launch LC1032	Total Tension Yield	0.070 (y)	3.10.5-8	
NAS1956C10	Bolts from Upper Interface Plate to Upper Support Ring	A286	Landing LC2038	Total Tension Yield	0.082 (y)	3.10.6-11	
NAS1956C8	Bolts from Lower Interface Plate to Lower Support Ring	A286	Landing LC2049	Total Tension Yield	0.106 (y)	3.10.7.1-11	
NAS1958C9	Bolts from Lower Interface Plate to Lower Support Ring	A286	Landing LC2049	Total Tension Yield	0.103 (y)	3.10.7.2-11	

Notes:

1. Factors of Safety are 1.4 for Ultimate and 1.1 for Yield.
2. u = ultimate, y = yield

TABLE 0.3.1-6 Payload Attach System Minimum Margin of Safety Summary

Part / Dwg number	Part Name / Description	Material & Heat Treatment	Critical Load Condition	Failure Mode	Minimum Margin of Safety	Reference Page	Comments
PAS Vertex Bracket SDG39135813	PAS Vertex Bracket	AL ALY 7050-T7451	Consistent On-Orbit Load Factor	Min Principal Stress	0.02 (u)	4.1-13	Static Test to FS = 1.5 See note 1
PAS Vertex Bracket SDG39135813	PAS Vertex Bracket	AL ALY 7050-T7451	Consistent On-Orbit Load Factor	Min Principal Stress	0.01 (u)	4.2-13	
PAS Platform Assembly SDG39135817	PAS Platform Assembly	AL ALY 7050-T7451	Consistent On-Orbit Load Factor	Tension ultimate	0.27 (u)	4.3-7	
Guide Pins, PAS Base Assembly SDG39135818	Guide Pins	AL ALY 7050-T7451	Consistent On-Orbit Load Factor	Shear ultimate	17.67 (u)	4.4-10	
PAS Bridge SDG39135838	PAS Bridge	AL ALY 7050-T7451	On Orbit Inertia Steady State	Ultimate	0.04 (u)	4.6-16	
Bridge Pin SDG39135826	Bridge Pin	A286	Landing	Shear ultimate	34.36 (u)	4.8-8	
Bearing Housing SEG39135845	Bearing Housing	CRES 15-5PH	Resultant Preload Combined On-Orbit/Mating	Tensile ultimate	0.20 (u)	4.10-14	

Part / Dwg number	Part Name / Description	Material & Heat Treatment	Critical Load Condition	Failure Mode	Minimum Margin of Safety	Reference Page	Comments
Capture Bar SDG39135850	Capture Bar	A286	On-Orbit	Tensile ultimate	0.01 (u)	4.11.1-7	
Handle Extension SDG39135853	Handle Extension	AL ALY 6061-T651	Handle Load	Max. principal stress ultimate	4.38 (u)	4.11.3-4	
Handle SDG39135854	Handle	AL ALY 6061-T651	Handle Load	Max. principal stress ultimate	1.803 (u)	4.11.4-7	

Notes:

1. Factors of Safety are 1.4 for Ultimate and 1.1 for Yield. For tested hardware, use Factors of Safety of 1.5 for Ultimate and 1.1 for Yield. The tested hardware factors of safety were applied to the Vertex Bracket analysis.
2. u = ultimate, y = yield

TABLE 0.3.1-7 Payload Attach System Fastener Minimum Margin of Safety Summary

Part / Dwg number	Part Name / Description	Material & Heat Treatment	Critical Load Condition	Failure Mode	Minimum Margin of Safety	Reference Page	Comments
NAS1351N4-8	Bolts from PAS Handle to PAS Handle Extension	A286	Handle Load	Total Tension Yield	0.091 (y)	4.12.2-5	
NAS1351N-16	Bolts from PAS Handle Extension to handle Base	A286	Handle Load	Total Tension Yield	0.213 (y)	4.12.3-5	
SDG39135850	Bolts from PAS Handle Base to Capture Bar	A286	Handle Load	Total Tension Yield	0.09 (y)	4.12.4-6	
NAS1351N6-28	Bolts from PAS Guide Pin to PAS Platform	A286	On-Orbit	Total Tension Yield	0.03 (y)	4.12.5.1-16	
NAS1956C30	Bolts from PAS Vertex Bracket to PAS Platform	A286	On-Orbit LC5031	Joint Separation	0.01	4.12.6.1-9	
NAS1160-6-30	PAS Vertex Bracket to PAS Platform Shear Bolt	A286	On-Orbit LC5031	Total Tension Yield	0.01 (y)	4.12.6.2-5	

Part / Dwg number	Part Name / Description	Material & Heat Treatment	Critical Load Condition	Failure Mode	Minimum Margin of Safety	Reference Page	Comments
EWB0420-6-30	Bolts from PAS Aft Bracket to PAS Platform	A286	On-Orbit LC5056	Total Tension Yield	0.05 (y)	4.12.7.1-9	
NAS1160-6-30	PAS Aft Bracket to PAS Platform Shear Bolt	A286	On-Orbit	Total Tension Yield	0.01 (y)	4.12.7.2-5	
NAS1351N4-10	Bolts from BCS Avionics Bracket to PAS Platform	A286	Launch/Landing	Total Tension Yield	0.124 (y)	4.12.8-6	
NAS1956C76H	Bolts from PAS Vertex Bracket to Lower USS-02	A286	On-Orbit LC5006	Total Tension Yield	0.071 (y)	4.12.9.1-12	
NAS1956C14	Bolts from PAS Aft Bracket to Lower USS-02	A286	On-Orbit LC5014	Total Tension Yield	0.10 (y)	4.12.10.1-9	

Notes:

1. Factors of Safety are 2.0 for Ultimate and 1.25 for Yield.
2. u = ultimate, y = yield

TABLE 0.3.1-8 Integration Hardware Minimum Margin of Safety Summary

Part / Dwg number	Part Name / Description	Material & Heat Treatment	Critical Load Condition	Failure Mode	Minimum Margin of Safety	Reference Page	Comments
PVGF Bracket SDG39135860	PVGF Bracket	AL ALY 7075-T7351	SSRMS Interface Loads	Max Principal Stress	0.082 (u)	5.2-13	
FRGF Bracket SDG39135861	FRGF Bracket	AL ALY 7075-T7351	SSRMS Induced Loads	Max Principal Stress	0.498 (u)	5.4-12	
ROEU Clevis Assembly SEG39137677	ROEU Clevis Assembly	AL ALY 7050-T7451	Launch & Abort Landing Case	Ultimate Shear	6.64 (u)	5.5.1-35	
Scuff Plate, USS-02 Assembly SDG39135867	Scuff Plate, USS-02 Assembly	AL ALY 7050T7451	Impact	Principal Stress	0.449 (u)	5.8-12	
ROEU/USS SEG39137677	ROEU/USS	AL ALY 7050-T7451	Launch & Abort Landing Case	Bearing Failure Analysis	38.828 (u)	5.11.6.2-5	
ROEU PDA Bracket Lug SEG39137676 & 78	ROEU PDA Bracket Lug	AL ALY 7050-T7451	Launch & Abort Landing Case	Combined Ultimate	6.394 (u)	5.11.6.3-14	
ROEU Harness Bracket SDG39135865	ROEU Harness Bracket	AL ALY 7050-T7451	Launch & Abort Landing Case	Bearing Ultimate	9.981 (u)	5.11.6.4-3	

Part / Dwg number	Part Name / Description	Material & Heat Treatment	Critical Load Condition	Failure Mode	Minimum Margin of Safety	Reference Page	Comments
SDG39135878	Handle Bracket -303, USS-02 Assembly	AL ALY 6061-T651	Load Case 1 Right End	Principal Stress	0.04 (u)	5.12.1-19	
SDG39135878	Handle Bracket -305, USS-02 Assembly	AL ALY 6061-T651	Load Case 8 Left End	Shear	0.049 (u)	5.12.1-32	
SEG39137684	Interface Panel A	AL ALY 7075-T73	Kick Load	Ultimate	0.136 (u)	5.13-19	

Notes:

1. Factors of Safety are 1.4 for Ultimate and 1.1 for Yield.
2. u = ultimate, y = yield

TABLE 0.3.1-9 Integration Hardware Fastener Minimum Margin of Safety Summary

Part / Dwg number	Part Name / Description	Material & Heat Treatment	Critical Load Condition	Failure Mode	Minimum Margin of Safety	Reference Page	Comments
EWB0420-6-17	Bolts from PVGF Bracket to PVGF	A286	Launch & Abort Landing Case	Combined Shear Tension Bending Ultimate	0.03 (u)	5.11.2-11	
NAS1351N4H14	Bolts from PVGF Bracket to Upper Trunnion Bridge Beam	A286	Launch & Abort Landing Case	Total Tension Yield	0.008 (y)	5.11.3-6	
NAS1351N4H16	Bolts from PVGF Bracket to Upper Trunnion Bridge Beam	A286	Launch & Abort Landing Case	Total Tension Yield	0.04 (y)	5.11.3-11	
NAS1351N4H16	Bolts from PVGF Bracket to Upper Trunnion Bridge Beam	A286	Launch & Abort Landing Case	Total Tension Yield	0.043 (y)	5.11.3-17	
NAS1351N4H14	Bolts from FRGF Bracket to Upper Trunnion Bridge Beam	A286	Launch & Abort Landing Case	Total Tension Yield	0.02 (y)	5.11.5-6	
NAS1351N4H14	Bolts from FRGF Bracket to Upper Trunnion Bridge Beam	A286	Launch & Abort Landing Case	Total Tension Yield	0.02 (y)	5.11.5-11	
NAS1351N4H16	Bolts from FGGF Bracket to Upper Trunnion Bridge Beam	A286	Launch & Abort Landing Case	Total Tension Yield	0.07 (y)	5.11.5-17	

Part / Dwg number	Part Name / Description	Material & Heat Treatment	Critical Load Condition	Failure Mode	Minimum Margin of Safety	Reference Page	Comments
NAS1351N420	Bolts Attaching ROEU Arm Flange to Sill Joint	A286	Launch & Abort Landing Case	Total Tension Yield	0.199 (y)	5.11.6.1-13	
NAS1351N3	Bolts from ROEU Harness Bracket to PDA Mounting Bracket	A286	Launch & Abort Landing Case	Total Tension Yield	0.19 (y)	5.11.6.4-7	
NAS1004-8A	Bolts - Shared Fasteners Connecting Lower Edge of IPA to Trunnion Beam	A286	Launch & Abort Landing Case	Total Tension Yield	0.14 (y)	5.11.11-13	
NAS1004-6A	0.25” Bolts - Shared Fasteners Connecting Lower Edge of IPA to Trunnion Beam	A286	Launch & Abort Landing Case	Total Tension Yield	0.16 (y)	5.11.11-19	
NAS1954C6	Bolts from Handle Bracket -303 to Bridge Beam Elbow	A286	Load Case 1 Right End	Combined shear, tension and bending ult	0.154 (u)	5.12.2-7	
NAS1351N3	Bolts from Handle Bracket -303 to ISS Handrail	A286	Load Case 1 Right End	Total Tension Yield	0.033	5.12.2-17	

Part / Dwg number	Part Name / Description	Material & Heat Treatment	Critical Load Condition	Failure Mode	Minimum Margin of Safety	Reference Page	Comments
NAS1954C4	Bolts from Handle Bracket -305 to Lower Angle Beam	A286	Load Case 8 Left End	Total Tension Yield	0.181	5.12.2-28	
NAS1351N3	Bolts from Handle Bracket -305 to ISS Handrail	A286	Load Case 8 Left End	Total Tension Yield	0.038	5.12.2-38	
NAS1153E36	Fasteners Connecting Front Sub-Panel to Standoff to Rear Sub-Panel	A286	40 g Vertical	Combined Shear Tension Bending Ultimate	0.07 (u)	5.13-42	
NAS1133E4	Bolts from Base Panel A to Base Panel Stiffener	A286	40 g Vertical	Total Tension Yield	0.33 (y)	5.13-48	
NAS1133E4	Bolts from Angle Bracket to C-Channel A Assembly	A286	40 g Vertical	Total Tension Yield	0.32 (y)	5.13-54	

Notes:

1. Factors of Safety are 2.0 for Ultimate and 1.25 for Yield.
2. u = ultimate, y = yield

TABLE 0.3.1-10 Miscellaneous Hardware Minimum Margin of Safety Summary

Part / Dwg number	Part Name / Description	Material & Heat Treatment	Critical Load Condition	Failure Mode	Minimum Margin of Safety	Reference Page	Comments
Vacuum Case Cable Bracket SDG39135877	Vacuum Case Cable Bracket	Al ALY 6061-T651	Small Secondary Structures Loads	Ultimate	5.264 (u)	6.1-10	

Notes:

1. Factors of Safety are 1.4 for Ultimate and 1.1 for Yield.
2. u = ultimate, y = yield

TABLE 0.3.1-11 Miscellaneous Hardware Fastener Minimum Margin of Safety Summary

Part / Dwg number	Part Name / Description	Material & Heat Treatment	Critical Load Condition	Failure Mode	Minimum Margin of Safety	Reference Page	Comments
NAS1351N3-24	Bolts from Lower Support Ring/Outer Cylinder to Vacuum Case Cable Bracket	A286	Small Secondary Structures Loads	Total Tension Yield	0.20 (y)	6.1-15	

Notes:

1. Factors of Safety are 2.0 for Ultimate and 1.25 for Yield.
2. u = ultimate, y = yield

0.4 Fail-Safe Minimum Margins of Safety

TABLE 0.4.1-1 Upper USS-02 Fastener Fail-Safe Minimum Margin of Safety Summary

Part / Dwg number	Part Name / Description	Material & Heat Treatment	Critical Load Condition	Failure Mode	Minimum Margin of Safety	Reference Page	Comments
SDG39135892-805 NAS1958C15	Bolts from Upper Vacuum Case Interface Plate to USS	A286	Shear Pin Failure Abort Landing LC2035	Combined Shear Tension Bending Ultimate	0.411 (u)	2.4.1.1-13	
SDG39135892-805 NAS1958C15	Bolts from Upper Vacuum Case Interface Plate to USS	A286	Abort Landing LC2038	Combined Shear Tension Bending Ultimate	0.404 (u)	2.4.1.1-19	
SDG39135892-811 NAS1958C17	Bolts from Lower Vacuum Case Interface Plate to USS	A286	Shear Pin Failure Abort Landing LC2011	Combined Shear Tension Bending Ultimate	0.422 (u)	2.4.1.2-13	
SDG39135892-811 NAS1958C17	Bolts from Lower Vacuum Case Interface Plate to USS	A286	Abort Landing LC2031	Combined Shear Tension Bending Ultimate	0.418 (u)	2.4.1.2-19	
NAS1958C24	Bolts from Upper Vacuum Case Joint to TRD Corner Bracket	A286	Shear Pin Failure Launch LC1019	Combined Shear Tension Bending Ultimate	0.116 (u)	2.4.1.3-15	
NAS1958C24	Bolts from Upper Vacuum Case Joint to TRD Corner Bracket	A286	Launch LC1032	Combined Shear Tension Bending Ultimate	0.086 (u)	2.4.1.3-21	
SDG39135892-815 NAS1958C13	Bolts from Sill Bracket to Sill Joint	A286	Launch LC1004	Combined Shear Tension Bending Ultimate	0.444 (u)	2.4.1.4-17	

Part / Dwg number	Part Name / Description	Material & Heat Treatment	Critical Load Condition	Failure Mode	Margin of Safety	Reference Page	Comments
SDG39135892-813 EWB 0420-8-16	Bolts from Sill Bracket to Sill Joint	A286	Launch LC1032	Combined Shear Tension Bending Ultimate	0.115 (u)	2.4.1.5-18	Joint Separation -0.156 acceptable for Fail safe
NAS1953C6	Bolts from WIF Adapter Plate to Sill Tube	A286	On-Orbit	Total Thread Shear Ultimate	0.049 (u)	2.4.1.6.1-9	Joint Separation -0.209 acceptable for fail safe
NAS1954C6	Bolts from WIF Adapter Plate to Side Mounted WIF	A286	Launch LC1001	Combined Shear Tension Bending Ultimate	0.333 (u)	2.4.1.6.2-8	Joint Separation -0.27 acceptable for fail safe
NAS1352N02-6	Bolts from Bushing Plate to Vacuum Case Joint	A286	40 g	Combined Shear Tension Bending Ultimate	0.59 (u)	2.4.1.7-7	
NAS1102E04-6	Bolts from Sill Plate to Sill Joint	A286	40 g	Combined Shear Tension Bending Ultimate	0.55 (u)	2.4.1.8-7	
NAS1958C15	Bolts from Lower USS-02 to Upper USS-02	A286	Shear Pin Failure Landing LC4015	Joint Separation	0.278 (u)	2.4.2.1-13	
NAS1958C15	Bolts from Lower USS-02 to Upper USS-02	A286	Landing LC4028	Joint Separation	0.237 (u)	2.4.2.1-19	

Part / Dwg number	Part Name / Description	Material & Heat Treatment	Critical Load Condition	Failure Mode	Margin of Safety	Reference Page	Comments
EWB 0420-8-13	Bolts from Lower Angle Beam Flange to Centerbody Box Joint	A286	Abort Landing LC2032	Total Thread shear Ultimate	0.088 (u)	2.4.2.2-17	
EWB 0420-8	Bolts from Keel Angle Joint to Lower USS-02 Assembly	A286	Landing LC4015	Total Thread Shear Ultimate	0.067 (u)	2.4.3.1-17	
NAS8103PU8	Bolts from Keel Retainer to Keel Trunnion	A286	Landing	Combined Shear Tension Bending Ultimate	0.435 (u)	2.4.3.2-8	
HTH1978-3-3	Bolts from Keel Retainer to Keel Block	A286	Landing	Joint Separation	0.249	2.4.3.2-17	

Notes:

1. Factors of Safety are 1.0 for Ultimate and 1.0 for Yield for Fail-Safe analysis.
2. u = ultimate, y = yield

TABLE 0.4.1-2 Vacuum Case Fastener Fail-Safe Minimum Margin of Safety Summary

Part / Dwg number	Part Name / Description	Material & Heat Treatment	Critical Load Condition	Failure Mode	Minimum Margin of Safety	Reference Page	Comments
NAS1351N3H16	Bolts from Vacuum Case Feed-thru-port Cover Plate to Vacuum Case Support Ring	A286	Launch /Landing Plus Pressure	Combined Shear Tension Bending Ultimate	0.509 (u)	3.9-22	
EWB 0420-4H-9	Bolts from Conical Flange to Upper Support Ring	A286	Landing LC2003	Combined Shear Tension Bending Ultimate	0.186 (u)	3.10.1-8	
EWB 0420-4H-9	Bolts from Conical Flange to Lower Support Ring	A286	Landing LC2027	Combined Shear Tension Bending Ultimate	0.169 (u)	3.10.2-8	
EWB 0420-4H-13	Bolts from Upper Support Ring to Outer Cylinder	A286	Landing LC2038	Combined Shear Tension Bending Ultimate	0.192 (u)	3.10.3-9	
EWB 0420-4H-7	Bolts from Upper Support Ring to Outer Cylinder	A286	Landing LC2057	Combined Shear Tension Bending Ultimate	0.186 (u)	3.10.3-17	

Part / Dwg number	Part Name / Description	Material & Heat Treatment	Critical Load Condition	Failure Mode	Margin of Safety	Reference Page	Comments
EWB 0420-4H-7	Bolts from Outer Cylinder to Lower Support Ring	A286	Landing LC2053	Combined Shear Tension Bending Ultimate	0.184 (u)	3.10.4.1-9	
EWB 0420-4H-13	Bolts from Outer Cylinder to Lower Support Ring	A286	Landing LC2054	Combined Shear Tension Bending Ultimate	0.188 (u)	3.10.4.1-17	
EWB 0420-5H-7	Bolts from Outer Cylinder to Lower Support Ring	A286	Landing LC2031	Combined Shear Tension Bending Ultimate	0.203 (u)	3.10.4.2-9	
NAS1958C9	Bolts from Clevis Plate to Upper Support Ring	A286	Launch LC1032	Combined Shear Tension Bending Ultimate	0.285 (u)	3.10.5-9	

Part / Dwg number	Part Name / Description	Material & Heat Treatment	Critical Load Condition	Failure Mode	Margin of Safety	Reference Page	Comments
NAS1956C10	Bolts from Upper Interface Plate to Upper Support Ring	A286	Shear Pin Failure Landing LC2038	Joint Separation	0.386	3.10.6-13	
NAS1956C10	Bolts from Upper Interface Plate to Upper Support Ring	A286	Landing LC2038	Joint Separation	0.176	3.10.6-19	
NAS1956C8	Bolts from Upper Interface Plate to Lower Support Ring	A286	Shear Pin Failure Landing LC2011	Combined Shear Tension Bending Ultimate	0.485 (u)	3.10.7.1-13	
NAS1956C8	Bolts from Lower Interface Plate to Lower Support Ring	A286	Landing LC2038	Combined Shear Tension Bending Ultimate	0.505 (u)	3.10.7.1-19	
NAS1958C9	Bolts from Lower Interface Plate to Lower Support Ring	A286	Shear Pin Failure Landing LC2049	Total Thread Shear Ultimate	0.486 (u)	3.10.7.2-13	
NAS1958C9	Bolts from Lower Interface Plate to Lower Support Ring	A286	Landing LC2038	Total Thread Shear Ultimate	0.482 (u)	3.10.7.2-19	

Notes:

1. Factors of Safety are 1.0 for Ultimate and 1.0 for Yield for Fail-Safe analysis.
2. u = ultimate, y = yield

TABLE 0.4.1-3 Payload Attach System Fastener Fail-Safe Minimum Margin of Safety Summary

Part / Dwg number	Part Name / Description	Material & Heat Treatment	Critical Load Condition	Failure Mode	Minimum Margin of Safety	Reference Page	Comments
NAS1351N6-28	Bolts from PAS Guide Pin to PAS Platform	A286	On-Orbit LC5032	Joint Separation	-0.33	4.12.5.1-30	Acceptable for Fail-Safe
NAS1956C30	Bolts from PAS Vertex Bracket to PAS Platform	A286	On-Orbit LC5031	Joint Separation	-0.40	4.12.6.1-15	Acceptable for Fail-Safe
NAS1160-6-30	PAS Vertex Bracket to PAS Platform Shear Bolt	A286	Launch LC1007	Combined Shear Tension Bending Ultimate	0.55	4.12.6.2-7	
EWB0420-6-30	Bolts from PAS Aft Bracket to PAS Platform	A286	On-Orbit LC5056	Joint Separation	0.01	4.12.7.1-15	
NAS1160-6-30	PAS Aft Bracket to PAS Platform Shear Bolt	A286	On-Orbit	Combined Shear Tension Bending Ultimate	0.57	4.12.7.2-7	
NAS1956C76H	Bolts from PAS Vertex Bracket to Lower USS-02	A286	On-Orbit LC5031	Combined Shear Tension Bending Ultimate	0.46 (u)	4.12.9.1-19	
NAS1956C14	Bolts from PAS Aft Bracket to Lower USS-02	A286	On-Orbit LC5016	Joint Separation	0.07	4.12.10.1-14	

Notes:

1. Factors of Safety are 1.0 for Ultimate and 1.0 for Yield for Fail-Safe analysis.
2. u = ultimate, y = yield

TABLE 0.4.1-4 Integration Hardware Fastener Fail-Safe Minimum Margin of Safety Summary

Part / Dwg number	Part Name / Description	Material & Heat Treatment	Critical Load Condition	Failure Mode	Minimum Margin of Safety	Reference Page	Comments
EWB0420-6-17	Bolts from PVGF Bracket to PVGF	A286	Launch & Abort Landing Case	Combined Shear Tension Bending Ultimate	0.041 (u)	5.11.2-18	
NAS1351N4H14	Bolts from PVGF Bracket to Upper Trunnion Bridge Beam	A286	Launch & Abort Landing Case	Joint Separation	-0.20	5.11.3-7	Non-cyclic load
NAS1351N4H16	Bolts from PVGF Bracket to Upper Trunnion Bridge Beam	A286	Launch & Abort Landing Case	Combined Shear Tension Bending Ultimate	0.12 (u)	5.11.3-12	
NAS1351N4H16	Bolts from PVGF Bracket to Upper Trunnion Bridge Beam	A286	Launch & Abort Landing Case	Combined Shear Tension Bending Ultimate	0.37 (u)	5.11.3-18	
NAS1351N4H14	Bolts from FRGF Bracket to Upper Trunnion Bridge Beam	A286	Launch & Abort Landing Case	Combined Shear Tension Bending Ultimate	0.1 (u)	5.11.5-7	
NAS1351N4H14	Bolts from FRGF Bracket to Upper Trunnion Bridge Beam	A286	Launch & Abort Landing Case	Combined Shear Tension Bending Ultimate	0.11 (u)	5.11.5-12	
NAS1351N4H16	Bolts from FRGF Bracket to Upper Trunnion Bridge Beam	A286	Launch & Abort Landing Case	Combined Shear Tension Bending Ultimate	0.42 (u)	5.11.5-18	

Part / Dwg number	Part Name / Description	Material & Heat Treatment	Critical Load Condition	Failure Mode	Minimum Margin of Safety	Reference Page	Comments
NAS1351N420	Bolts Attaching ROEU Arm Flange to Sill Joint	A286	Launch & Abort Landing Case	Combined Shear Tension Bending Ultimate	0.297 (y)	5.11.6.1-20	
NAS1004-8A	Bolts - Shared Fasteners Connecting Lower Edge of IPA to Trunnion Beam	A286	Launch & Abort Landing Case	Total Thread Shear Ultimate	0.56 (u)	5.11.11-14	
NAS1004-6A	Bolts - Shared Fasteners Connecting Lower Edge of IPA to Trunnion Beam	A286	Launch & Abort Landing Case	Combined Shear Tension Bending Ultimate	0.55 (u)	5.11.11-20	
NAS1954C6	Bolts from Handle Bracket -303 to Bridge Beam Elbow Bottom	A286	Load Case 1 Right End	Combined Shear Tension Bending Ultimate	0.16	5.12.2-8	
NAS1351N3	Bolts from Handle Bracket -303 to ISS Handrail	A286	Load Case 1 Right End	Joint Separation	0.243	5.12.2-23	
NAS1954C4	Bolts from Handle Bracket -305 to Lower Angle Beam	A286	Load Case 8 Left End	Total Thread Shear Ultimate	0.485	5.12.2-29	

Part / Dwg number	Part Name / Description	Material & Heat Treatment	Critical Load Condition	Failure Mode	Minimum Margin of Safety	Reference Page	Comments
NAS1351N3	Bolts from Handle Bracket -305 to ISS Handrail	A286	Load Case 8 Left End	Joint Separation	0.351	5.12.2-44	
NAS1153E36	Fasteners connecting Front sub-Panel to Standoff to Rear Sub-Panel	A286	40 g Vertical	Combined Shear Tension Bending Ultimate	0.07 (u)	5.13-43	
NAS1133E4	Bolts from Base Panel A to Base Panel Stiffener	A286	40 g Vertical	Total Thread Shear Ultimate	0.41 (u)	5.13-49	
NAS1133E4	Bolts from Angle Bracket to C-Channel A Assembly	A286	40 g Vertical	Total Thread Shear Ultimate	0.39 (y)	5.13-55	

Notes:

1. Factors of Safety are 1.0 for Ultimate and 1.0 for Yield for Fail-Safe analysis.
2. u = ultimate, y = yield

TABLE 0.4.1-5 Miscellaneous Hardware Fastener Fail-Safe Minimum Margin of Safety Summary

Part / Dwg number	Part Name / Description	Material & Heat Treatment	Critical Load Condition	Failure Mode	Minimum Margin of Safety	Reference Page	Comments
NAS1351N3-24	Bolts from Lower Support Ring/Outer Cylinder to Vacuum Case Cable Bracket	A286	Small Secondary Structures Loads	Joint Separation	0.19	6.1-16	

Notes:

1. Factors of Safety are 1.0 for Ultimate and 1.0 for Yield for Fail-Safe analysis.
2. u = ultimate, y = yield

0.5 Table of Figures

Figure Number	Figure Description	Page Number
Figure 1.0-1	Alpha Magnetic Spectrometer – 02 Configuration - Launch, Landing, and On-Orbit	1.0-2
Figure 1.0-2	Alpha Magnetic Spectrometer – 02 Configuration - Launch, Landing, and On-Orbit	1.0-3
Figure 1.0-3	Alpha Magnetic Spectrometer – 02 Configuration - Launch, Landing, and On-Orbit	1.0-4
Figure 1.0-4	Alpha Magnetic Spectrometer – 02 Configuration Close-up of PAS	1.0-5
Figure 1.0-5	View of Alpha Magnetic Spectrometer – 02	1.0-7
Figure 1.0-6	Bottom and Top View of Alpha Magnetic Spectrometer – 02	1.0-8
Figure 1.0-7	Back and Front View of Alpha Magnetic Spectrometer – 02	1.0-9
Figure 1.0-8	Left and Right View of Alpha Magnetic Spectrometer – 02	1.0-10
Section 2.1.1	***Upper Vacuum Case Interface Joint***	
Figure 2.1.1-1	Upper VC Joints With Vacuum Case and USS-02	2.1.1-3
Figure 2.1.1-2	Upper VC Joint and TRDGAS Assembly	2.1.1-4
Figure 2.1.1-3	Details of the Upper VC Joint	2.1.1-5
Figure 2.1.1-4	Upper VC Joint models embedded into the USS-02 model	2.1.1-5
Figure 2.1.1-5	TRDGAS model connected to the Upper VC Joint model	2.1.1-6
Figure 2.1.1-6	Locations of the Elements with the Max. Stresses	2.1.1-11
Figure 2.1.1-7a	Location of the Max. Tensile Stress on the Plate Element	2.1.1-12
Figure 2.1.1-7b	Location of the Max. Yield Stress on the Plate Element	2.1.1-12
Figure 2.1.1-7c	Location of the Max. Shear Stress on the Plate Element	2.1.1-13
Section 2.1.2	***Upper Trunnion Bridge Beam Assembly***	
Figure 2.1.2-1	Upper Trunnion Bridge Beam shown in 2-04 Loads Model	2.1.2-2
Section 2.1.7	***Lower Trunnion Bridge Beam Elbow***	
Figure 2.1.7-1	Location of the Bridge Beam Elbow Joints in AMS-02	2.1.7-3
Figure 2.1.7-2	FE Model of the Bridge Beam Elbow Joint	2.1.7-7
Section 2.1.8	***Lower Trunnion Bridge Beam Assembly***	
Figure 2.1.8-1	Lower Trunnion Bridge Beam shown in 2-04 Loads Model	2.1.8-2
Section 2.1.9	***Lower Vacuum Case Interface Joint***	
Figure 2.1.9-2	Location of Lower VC Joints in AMS-02	2.1.9-3
Figure 2.1.9-3	View 1 - FEMAP Model of Lower VC Joint	2.1.9-4
Figure 2.1.9-4	View 2- FEMAP Model of Lower VC Joint	2.1.9-5
Figure 2.1.9-5	Stress Contour Plot of Lower VC Joint in Launch Condition	2.1.9-14
Figure 2.1.9-6	Stress Contour Plot of Lower VC Joint in Landing Condition	2.1.9-15
Section 2.1.10	***Sill Bracket***	
Figure 1	Upper USS-02 Assembly	2.1.10-3
Figure 2	Sill Bracket Model	2.1.10-4
Figure 3a	Sill Bracket Plate - Maximum Principal Stress	2.1.10-8
Figure 3b	Sill Bracket Tube - Maximum Principal Stress	2.1.10-10
Section 2.1.11	***Sill Tube***	
Figure 2.1.11-1	Upper USS-02 Assembly	2.1.11-2
Section 2.1.12	***Diagonal Sill Bracket***	
Figure 1	Diagonal Sill Bracket	2.1.12-2
Figure 2	Upper USS-02 Assembly	2.1.12-3
Section 2.1.13.1	***Diagonal Strut Tube***	
Figure 2.1.13.1-1	Upper USS-02 Assembly	2.1.13.1-2
Section 2.1.13.2	***Diagonal Strut Endfitting***	
Figure 2.1.13.2-1	Upper USS-02 Assembly	2.1.13.2-2
Figure 2.1.13.2-2	Diagonal Strut Endfitting	2.1.13.2-3
Figure 2.1.13.2-3	Diagonal Strut Assembly, SEG39135741 / Rod End Bearing, SDG39135745	2.1.13.2-4
Section 2.1.15	***WIF Adapter Bracket***	
Figure 2.1.15-1	WIIF Adapter Plate	2.1.15-2
Figure 2.1.15-2	WIF Socket and WIIF Adapter Plate	2.1.15-3
Figure 2.1.15-3	Finite Element Model	2.1.15-4

Fig. 2.1.15-4 Maximum principal stress contours 2.1.15-6
Fig. 2.1.15-5 Von Mises stress contours 2.1.15-7
Fig. 2.1.15-6 Maximum shear stress contours 2.1.15-8
Fig. 2.1.15-7 Minimum principal stress contours 2.1.15-9
Section 2.2.1 ***Primary Centerbody Box Joint***
Figure 2.2.1-1 Lower Center Body Assemblies and AMS-02 Structure 2.2.1-4
Figure 2.2.1-2 Lower Center Body Assembly 2.2.1-5
Figure 2.2.1-3a Lower Centerbody Joint with the Keel Connection 2.2.1-6
Figure 2.2.1-3b Lower Centerbody Joint with no keel connection 2.2.1-6
Figure 2.2.1-4 Center body Assembly FEA models embedded into the USS02 FEA model 2.2.1-7
Figure 2.2.1-5 Partial view of FEA models for Lower Center Body Assembly in USS-02 ..... 2.2.1-8
Figure 2.2.1-6 Locations of the Elements with the Maximum Stresses 2.2.1-15
Figure 2.2.1-7a Location of the Maximum Tensile Stress on the Plate Element 2.2.1-16
Figure 2.2.1-7b Location of the Maximum Yield Stress on the Plate Element 2.2.1-16
Figure 1.2.2.7c Location of the Maximum Shear Stress on the Plate Element 2.2.1-17
Figure 2.2.1-8 Locations of the Elements with Artificial High Stresses 2.2.1-18
Section 2.2.3 ***EMC Box Tube***
Figure 2.2.3-1 EMC Box Tube shown in Lower uss2-04 Model 2.2.3-2
Section 2.2.4 ***Lower USS to Upper USS Joint***
Figure 2.2.4-1 Location of AMS-02 Lower USS to Upper USS Joints in Loads Model 2-06 ..... 2.2.4-3
Figure 2.2.4-2 View 1 FEMAP Model of Lower USS to Upper USS Joint 2.2.4-4
Figure 2.2.4-3 View 2- FEMAP Model of Lower USS to Upper USS Joint 2.2.4-5
Figure 2.2.4-1 Dimensions and Bolt Locations 2.2.4-20
Figure 2.2.4-2 Dimensions and Cross Section Locations 2.2.4-20
Section 2.2.5 ***RICH Mounting Bracket***
Figure 2.2.5-1 Location of RICH Brackets in AMS-02 ..... 2.2.5-3
Figure 2.2.5-2 FEMAP Model of RICH Brackets 2.2.5-4
Figure 2.2.5-3 Stress Contour Plot of RICH Brackets in Launch Condition 2.2.5-14
Figure 2.2.5-4 Stress Contour Plot of RICH Brackets in Landing Condition 2.2.5-15
Section 2.2.6 ***Lower Angle Beam Assembly***
Figure 2.2.6-1 Lower Angle Beam shown in Lower uss2-04 Model 2.2.6-2
Section 2.2.7 ***PAS RICH Bracket***
Figure 2.2.7-1 Location of PAS-RICH Brackets in AMS-02 ..... 2.2.7-3
Figure 2.2.7-2 FEMAP Model of PAS-RICH Brackets 2.2.7-4
Figure 2.2.7-3 Stress Contour Plot of PAS-RICH Brackets in Launch Condition 2.2.7-14
Figure 2.2.7-4 Stress Contour Plot of PAS-RICH Brackets in Landing Condition 2.2.7-15
Figure 2.2.7-5 Stress Contour Plot of PAS-RICH Brackets in On-Orbit Condition 2.2.7-16
Section 2.2.8 ***Lower Angle Beam Flange***
Figure 2.2.8-1 Lower Centerbody Assembly 2.2.8-2
Figure 2.2.8-2 Lower Angle Beam Flange 2.2.8-3
Section 2.3.2 ***Keel Block***
Figure 2.3.2-1 Location of Keel Block in AMS-02 ..... 2.3.2-3
Figure 2.3.2-2 FEMAP Model of Keel Block 2.3.2-4
Figure 2.3.2-3 Stress Contour Plot of Keel Block in Launch Condition 2.3.2-14
Figure 2.3.2-4 Stress Contour Plot of Keel Block in Landing Condition 2.3.2-15
Section 2.3.3 ***Keel Tube***
Figure 2.3.3-1 Keel Tube 2.3.3-2
Section 2.3.5 ***Keel Retainer***
Figure 2.3.5-1 Keel Assembly SEG39135768 ..... 2.3.5-2
Figure 2.3.5-2 Keel Retainer 2.3.5-3
Section 2.5.1.1 ***Upper Vacuum Case Joint to Upper Trunnion Bridge Rivet Analysis***
Figure 2.5.1.1-1 Rivet Pattern Dimensions for Beam Element End A 2.5.1.1-3
Figure 2.5.1.1-2 Layout of Rivet Patterns used to Calculate Rivet Pitch for Torsional Load 2.5.1.1-6
Section 2.5.1.2 ***Lower Trunnion Bridge Beam Elbow to Sill Joint Rivet Analysis***
Figure 2.5.1.2-1 Rivet Pattern Dimensions for Beam Element Ends A and B 2.5.1.2-3
Figure 2.5.1.2-2 Layout of Rivet Patterns used to Calculate Rivet Pitch for Torsional Load 2.5.1.2-6

Section 2.5.1.3 **Lower Trunnion Bridge Beam Elbow to Sill Joint Rivet Analysis**
Figure 2.5.1.3-1 Rivet Pattern Dimensions for Beam Element Ends A and B....2.5.1.3-3
Figure 2.5.1.3-2 Layout of Rivet Patterns used to Calculate Rivet Pitch for Torsional Load 2.5.1.3-6
Section 2.5.1.4 ***Diagonal Sill Bracket to Sill Tube Rivet Analysis***
Figure 2.5.1.4-1 Rivet Pattern Dimensions for Beam Element Ends A and B....2.5.1.4-3
Figure 2.5.1.4-2 Layout of Rivet Patterns used to Calculate Rivet Pitch for Torsional Load 2.5.1.4-6
Section 2.5.1.6 ***Upper Trunnion Bridge Beam to Sill Joint Rivet Analysis***
Figure 2.5.1.6-1 Rivet Pattern Dimensions for Beam Element Ends A and B....2.5.1.6-3
Figure 2.5.1.6-2 Layout of Rivet Patterns used to Calculate Rivet Pitch for Torsional Load 2.5.1.6-6
Section 2.5.1.7 ***Lower Trunnion Bridge Beam to Bridge Beam Elbow Rivet Analysis***
Figure 2.5.1.7-1 Rivet Pattern Dimensions for Beam Element Ends A and B....2.5.1.7-3
Figure 2.5.1.7-2 Layout of Rivet Patterns used to Calculate Rivet Pitch for Torsional Load 2.5.1.7-6
Section 2.5.1.8 ***Lower Trunnion Bridge Beam to Lower Vacuum Case Joint Rivet Analysis***
Figure 2.5.1.8-1 Rivet Pattern Dimensions for Beam Element Ends A and B....2.5.1.8-3
Figure 2.5.1.8-2 Layout of Rivet Patterns used to Calculate Rivet Pitch for Torsional Load 2.5.1.8-6
Section 2.5.2.1 ***Lower USS-02 to Upper USS-02 to Lower Angle Beam Rivet Analysis***
Figure 2.5.2.1-1 Rivet Pattern Dimensions for Beam Element Ends A and B....2.5.2.1-3
Figure 2.5.2.1-2 Layout of Rivet Patterns used to Calculate Rivet Pitch for Torsional Load 2.5.2.1-6
Section 2.5.2.2 ***Lower Angle Beam to Lower Angle Flange Beam Flange Rivet Analysis***
Figure 2.5.2.2-1 Rivet Pattern Dimensions for Beam Element Ends A and B....2.5.2.2-3
Figure 2.5.2.2-2 Layout of Rivet Patterns used to Calculate Rivet Pitch for Torsional Load 2.5.2.2-6
Section 2.5.2.3 ***EMC Box Tubes to Centerbody Joints Rivet Analysis***
Figure 2.5.2.3-1 EMC Box Tube to Centerbody Box Joint 2.5.2.3-2
Figure 2.5.2.3-2 Centerbody Box Joint with Rivet Location....2.5.2.3-2
Figure 2.5.2.3-3 Rivet Pattern Dimensions for Beam Element End A....2.5.2.3-3
Figure 2.5.2.3-4 Side 1 Layout of Rivet Patterns used to Calculate Rivet Pitch for Torsional Load 2.5.2.3-7
Figure 2.5.2.3-5 Side 2 Layout of Rivet Patterns used to Calculate Rivet Pitch for Torsional Load 2.5.2.3-8
Section 2.5.2.4 ***RICH Bracket to EMC Box Tubes Rivet Analysis***
Figure 2.5.2.4-1 Location of RICH Brackets in AMS-02....2.5.2.4-3
Figure 2.5.2.4-2 FEMAP Model of RICH Brackets 2.5.2.4-4
Figure 2.5.2.4-3 FEMAP Model of Rivets 2.5.2.4-5
Section 2.5.2.5 ***RICH PAS Brackets to EMC Box Tubes Rivet Analysis***
Figure 2.5.2.5-1 Location of PAS-RICH Brackets in AMS-02 ....2.5.2.5-3
Figure 2.5.2.5-2 FEMAP Model of PAS-RICH Brackets....2.5.2.5-4
Figure 2.5.2.5-3 FEMAP Model of Rivets 2.5.2.5-5
Section 2.5.3.1 ***Keel Angle Joint to Keel Tube Rivet Analysis***
Figure 2.5.3.1-1 Rivet Pattern Dimensions for Beam Element Ends A and B....2.5.3.1-3
Figure 2.5.3.1-2 Layout of Rivet Patterns used to Calculate Rivet Pitch for Torsional Load 2.5.3.1-6
Section 2.5.3.2 ***Keel Tube to Keel Block Rivet Analysis***
Figure 2.5.3.2-1 Rivet Pattern Dimensions for Beam Element Ends A and B....2.5.3.2-3
Figure 2.5.3.2-2 Layout of Rivet Patterns used to Calculate Rivet Pitch for Torsional Load 2.5.3.2-6
Section 3.1.1 ***Conical Flange Assembly Strength Assessment***
Figure 3.1.1-1 Conical Flange 3.1.1-2
Figure 3.1.1-2 Conical Flange Assembly in Vacuum Case 3.1.1-3
Figure 3.1.1-3 Some Details of Conical Flange....3.1.1-4
Figure 3.1.1-4 Top Conical Flange 3.1.1-6
Figure 3.1.1-5 Bottom Conical Flange. 3.1.1-7
Figure 3.1.1-6 Conical Flange 3.1.1-8
Figure 3.1.1-7 Stress Contour Plot 3.1.1-13
Section 3.1.2 ***Conical Flange Stability Assessment***
Figure 3.1.2-1 Imperfection Parameter a2 vs Parameter zL for Cylinders Subjected to Pressure 3.1.2-5
Figure 3.1.2-2 Conical Flange FE Model....3.1.2-7
Figure 3.1.2-3 KDF vs Relative Imperfection Curve for Conical Flange....3.1.2-8
Section 3.2.1 ***Outer Cylinder Strength Assessment***
Figure 3.2.1-1 Side View of Vacuum Case Outer Cylinder 3.2.1-3
Figure 3.2.1-2 Profile of Outer Cylinder....3.2.1-4

Figure 3.2.1-3 Outer Cylinder Stress Model 3.2.1-6
Figure 3.2.1-4 Outer Cylinder Stress Contour for Load Case 2031 ..... 3.2.1-12
Figure 3.2.1-5 Outer Cylinder Stress Contour Detail for Load Case 2031 ..... 3.2.1-13
Figure 3.2.1-6 Vacuum Case Assembly 3.2.1-16
Figure 3.2.1-7 Section View of Vacuum Case Outer Cylinder 3.2.1-17
Figure 3.2.1-8 Profile of Outer Cylinder 3.2.1-18
Section 3.2.2 ***Outer Cylinder Stability Assessment***
Figure 3.2.2-1 Vacuum Case Assembly 3.2.2-2
Figure 3.2.2-2 Section View of Vacuum Case Outer Cylinder 3.2.2-3
Figure 3.2.2-3 Profile of Outer Cylinder 3.2.2-4
Figure 3.2.2-4 Bifurcation Points and Limit Points via Geometrically Nonlinear Analysis 3.2.2-5
Figure 3.2.2-2 Eigenshape for Outer Cylinder Refined Model, Pressure Case Only 3.2.2-11
Figure 3.2.2-3 Eigenshape for Outer Cylinder Refined Model, Case 2031 ..... 3.2.2-12
Figure 3.2.2-4 Eigenshape for Outer Cylinder Refined Model, Case 2063 ..... 3.2.2-13
Figure 3.2.2-5 Top Major Principal Stresses for Case 2031 ..... 3.2.2-14
Figure 3.2.2-6 Top Minor Principal Stresses for Case 2031 ..... 3.2.2-15
Figure 3.2.2-7 Bottom Major Principal Stresses for Case 2031 ..... 3.2.2-16
Figure 3.2.2-8 Bottom Minor Principal Stresses for Case 2031 ..... 3.2.2-17
Figure 3.2.2-9 Top Major Principal Stresses for Case 2063 ..... 3.2.2-18
Figure 3.2.2-10 Top Minor Principal Stresses for Case 2063 ..... 3.2.2-19
Figure 3.2.2-11 Bottom Major Principal Stresses for Case 2063 ..... 3.2.2-20
Figure 3.2.2-12 Bottom Minor Principal Stresses for Case 2063 ..... 3.2.2-21
Section 3.3.1 ***Inner Cylinder Strength Assessment***
Figure 3.3.1-1 Side View of Vacuum Case Inner Cylinder 3.3.1-2
Figure 3.3.1-2 End Detail of Inner Cylinder 3.3.1-3
Figure 3.3.1-3 AMS-02 Model 2-03 ..... 3.3.1-4
Figure 3.3.1-4 Inner Cylinder Stress Model 3.3.1-5
Figure 3.3.1-5 Inner Cylinder to Conical Flange Weld Detail 3.3.1-6
Figure 3.3.1-6 Finite Element Model Detail for Conical Flange to Inner Cylinder Attachment 3.3.1-7
Figure 3.3.1-7 Inner Cylinder Stress Contour for Load Case 1045 ..... 3.3.1-14
Figure 3.3.1-8 Max Absolute Principal Stress of 31393 psi in Element ID 202937 ..... 3.3.1-15
Figure 3.3.1-9 Max Tensile Stress of 21390 psi in Element ID 202939 ..... 3.3.1-16
Figure 3.3.1-10 Load Case 1045 Maximum Weld Stress of 19666.58 psi 3.3.1-19
Section 3.4 ***Upper Support Ring***
Figure 3.4-1 Location of Upper Support Ring in AMS-02 ..... 3.4-3
Figure 3.4-2 High Detail Full Flight USS Model 3.4-4
Figure 3.4-3 High Detail Flight VC 3.4-5
Figure 3.4-4 View of Vacuum Case 3.4-14
Figure 3.4-5 Close Up of O-ring Elements on the VC Ring with Negative Margins 3.4-16
Figure 3.4-6 Elements with Negative Margins on the O-ring Lip of the VC Ring 3.4-17
Figure 3.4-7 A Cross Section of the O-ring Lip 3.4-18
Figure 3.4-8 Sample with the RBE2 Elements Representing Contact on the VC Rings 3.4-19
Figure 3.4-9 Area for Stress Hand Calculations 3.4-21
Figure 3.4-10 Omitted Elements on Upper Support Ring 3.4-23
Figure 3.4-11 Additional Omitted Elements on Upper Support Ring 3.4-24
Figure 3.4-12 Location of Elements 8035881, 8035989, 8035991 ..... 3.4-25
Section 3.5 ***Lower Support Ring***
Figure 3.5-1 Location of Lower Support Ring in AMS-02 ..... 3.5-3
Figure 3.5-2 High Detail Full Flight USS Model 3.5-4
Figure 3.5-3 High Detail Flight VC 3.5-5
Section 3.8 ***Clevis Plate***
Figure 3.8-1 Location of Clevis Plate 3.8-2
Figure 3.8-2 Angle of Applied Force 3.8-3
Figure 3.8-3 Typical Lug Dimension and Loading 3.8-4
Figure 3.8-4 Clevis Plate 3.8-4
Section 4.0 ***Strength Assessment of Payload Attach System Assembly***

Figure 4.0-1 AMS-02 Attached to ISS 4.0-2
Figure 4.0-2 PAS Assembly....4.0-3
Figure 4.0-3 Underside of the PAS Assembly 4.0-4
Figure 4.0-4 Cross Section View of Platform and Bridge Beam....4.0-4
Figure 4.0-5 Active PAS with UCCAS Coordinate System 4.0-6
Figure 4.0-6 Payload Berthed Condition 4.0-6
Figure 4.0-7 Peak On-Orbit Load Cases from page 7-434 ....4.0-7
Figure 4.0-8 Peak Berthing Contact Load Cases from page 7-716 ....4.0-7
Figure 4.0-9 The Following Load Derivations And Load Cases Can Be Found In Appendix C16....4.0-8
Figure 4.0-10 PAS Assembly FEMAP Model 4.0-9
Figure 4.0-11 FEMAP Model of Bridge Beams with Capture Bar Assembly....4.0-10
Section 4.1 ***Vertex Bracket***
Figure 4.1-1 Location Of PAS Vertex Bracket In AMS-02....4.1-3
Figure 4.1-2 View Of Vertex Bracket Model 4.1-4
Figure 4.1-3 Second View Showing Bottom Of Vertex Bracket 4.1-5
Figure 4.1-4 NASTRAN File Locations....4.1-6
Figure 4.1-5 Stress Contour Vertex Bracket....4.1-14
Figure 4.1-6 Stress Contour Vertex Bracket High Stress Area 4.1-15
Figure 4.1-7 Stress Contour Vertex Bracket With Deflection 4.1-15
Figure 4.1-8 Red Areas Have Stress Ratio Above 30% For At Least One Load Case....4.1-16
Figure 4.1-9 High Stress Area On “U” Shaped Area 4.1-16
Figure 4.1-10 Several Areas With Stress Ratio Above 30% 4.1-17
Figure 4.1-11 Second View Of Areas With Stress Ratio Above 30%....4.1-18
Figure 4.1-12 Areas With Stress Ratio Above 30% On Base Of Vertex Bracket....4.1-18
Section 4.2 ***Aft Bracket***
Figure 4.2-1 Location of PAS Aft Brackets in AMS-02 ....4.2-3
Figure 4.2-2 PAS Aft Brackets In AMS-02....4.2-4
Figure 4.2-3 Areas With Negative Margins On Aft-Bracket....4.2-9
Figure 4.2-4 Location Of High Stress Plate Element In Red Green Is Actual Part Thickness 4.2-10
Figure 4.2-5 Location Of Solid Element With Negative Margin 4.2-11
Figure 4.2-6 Plot Showing Malformed Element....4.2-12
Figure 4.2-7 Aft Bracket Areas With Stress Ratio Greater Than 30%....4.2-13
Figure 4.2-8 Aft Bracket Areas With Stress Ratio Greater Than 30%....4.2-14
Section 4.3 ***PAS Platform Assembly***
Figure 4.3-1 PAS Platform Assy, PAS Base Assembly, SDG39135817....4.3-2
Figure 4.3-2 High Stress Areas of PAS 4.3-3
Section 4.4 ***Guide Pins***
Figure 4.4-1 Cross Section AA, Guide Pins, PAS Base Assembly 4.4-2
Figure 4.4-2 Guide Pins, PAS Base Assembly....4.4-3
Figure 4.4-3 Top View of the Active PAS 4.4-4
Figure 4.4-4 Bottom View of the Passive PAS 4.4-5
Figure 4.4-5 Trimetric View of the Active PAS 4.4-6
Figure 4.4-6 FEM of Guide Pins, PAS Base Assembly, Aft and Vertex Brackets....4.4-7
Section 4.6 ***PAS Bridge Bracket***
Figure 4.6-1 PAS Bridge Assembly 4.6-3
Figure 4.6-2 AMS Passive PAS Base Assembly....4.6-3
Figure 4.6-3 FEM of Bridge Beam, Guide Pins, PAS Base Assembly, Aft and Vertex Bracket....4.6-4
Section 4.8 ***Bridge Pin***
Figure 4.8-1 Bridge Pin, AMS Passive PAS Assembly, SDG39135826-001 ....4.8-2
Figure 4.8-2 Bridge Pin in Relation to PAS Base Assembly 4.8-3
Figure 4.8-3 Cross Section View of Bridge Beam and Platform....4.8-3
Section 4.10 ***Bearing Housing***
Figure 4.10-1 View Bearing Housing in the PAS Assembly 4.10-2
Figure 4.10-2 Configuration of Bearing Housing Inside of the Capture Bar Assembly 4.10-4
Figure 4.10-3 ISO View of Bearing Housing Assembly....4.10-4
Section 4.11.1 ***Capture Bar***

Figure 4.11.1-1 Capture Bar Assembly, AMS Passive PAS Assembly, SEG39135849 ..... 4.11.1-2
Section 5.1 ***UMA Bracket***
Figure 5.1-1 Location of UMA Bracket on Lower USS-02 ..... 5.1-3
Figure 5.1-2 FEMAP Model of UMA Bracket 5.1-4
Section 5.2 ***PVGF Bracket***
Figure 5.2-1 Location of PVGF Brackets on Upper USS-02 ..... 5.2-3
Figure 5.2-2 FEMAP Model of PVGF Bracket 5.2-4
Figure 5.2-3 Stress Contour Plot of Minimum Principal Stress. 5.2-14
Figure 5.2-4 Stress Contour Plot of Von Mises Stress 5.2-14
Figure 5.2-5 Stress Contour Plot of Max Shear Stress 5.2-15
Section 5.4 ***FRGF Bracket***
Figure 5.4-1 Location of FRGF Brackets on Upper USS-02 ..... 5.4-3
Figure 5.4-2 FEMAP Model of FRGF Bracket 5.4-4
Figure 5.4-3 Stress Contour Plot of Minimum Principal Stress. 5.4-13
Figure 5.4-4 Stress Contour Plot of Von Mises Stress 5.4-13
Figure 5.4-5 Stress Contour Plot of Max Shear Stress 5.4-14
Section 5.8 ***Scuff Plate***
Figure 5.8-1 Location of Scuff Plates on USS-02 Assembly 5.8-3
Figure 5.8-2 Configuration of Scuff Plate 5.8-4
Figure 5.8-3 FEMAP Model of Scuff Plate. 5.8-5
Figure 5.8-4 Stress Contour Plot of Scuff Plate 5.8-13
Figure 5.8-5 Stress Contour Plot of Scuff Plate 5.8-14
Figure 5.8-6 Stress Contour Plot of Scuff Plate 5.8-15
Figure 5.8-7 Stress Contour Plot of Scuff Plate 5.8-16
Figure 5.8-8 Stress Contour Plot of Scuff Plate 5.8-17
Figure 5.8-9 Stress Contour Plot of Scuff Plate 5.8-18
Figure 5.8-10 Stress Contour Plot of Scuff Plate 5.8-19
Figure 5.8-11 Stress Contour Plot of Scuff Plate 5.8-20
Figure 5.8-12 Stress Contour Plot of Scuff Plate 5.8-21
Figure 5.8-13 Stress Contour Plot of Scuff Plate 5.8-22
Figure 5.8-14 Stress Contour Plot of Scuff Plate 5.8-23
Figure 5.8-15 Stress Contour Plot of Scuff Plate 5.8-24
Figure 5.8-16 Stress Contour Plot of Scuff Plate 5.8-25
Figure 5.8-17 Stress Contour Plot of Scuff Plate 5.8-26
Figure 5.8-18 Stress Contour Plot of Scuff Plate 5.8-27
Figure 5.8-19 Stress Contour Plot of Scuff Plate 5.8-28
Section 5.9 ***EVA Connector Panel Assembly***
Figure 5.9-1 Location of EVA Connector Panel on Upper USS-02 ..... 5.9-3
Figure 5.9-2 FEMAP Model of EVA Connector Panel 5.9-4
Figure 5.9-3 FEMAP Model of Scuff Plate. 5.9-5
Figure 5.9-4 Stress Contour Plot of Scuff Plate 5.9-13
Section 5.10.1 ***Port Debris Shield Assembly***
Figure 5.10.1.1 Port Debris Shield Assembly, SEG39137851 ..... 5.10.1-4
Figure 5.10.1.2 Port Debris Shield with the Unique Support Structure (USS) 5.10.1-5
Figure 5.10.1.3 Port Debris Shield with the USS Assembly View. 5.10.1-5
Figure 5.10.1.4 Features of the Port Debris Shield 5.10.1-6
Figure 5.10.1.5 Transparent View Looking Through the Side of External Bumper at Standoffs 5.10.1-7
Figure 5.10.1.6 Port Debris Shield Mounting Plates Supporting the Ballistic Blanket 5.10.1-7
Figure 5.10.1.7 Port Debris Shield Mounting Brackets. 5.10.1-8
Figure 5.10.1.8 Finite Element Model of Port DS Integrated with Full Payload 5.10.1-11
Section 5.10.2 ***Starboard Debris Shield Assembly***
Figure 5.10.2.1 Starboard Debris Shield Assembly, SEG39137852 ..... 5.10.2-4
Figure 5.10.2.2 Starboard Debris Shield with the Unique Support Structure (USS) 5.10.2-5
Figure 5.10.2.3 Starboard Debris Shield with the USS 5.10.2-6
Figure 5.10.2.4 Transparent View Looking Through the Side of External Bumper at Standoffs 5.10.2-7
Figure 5.10.2.5 Starboard Debris Shield Mounting Plates Supporting the Ballistic Blanket 5.10.2-7

Figure 5.10.2.6 Starboard Debris Shield Mounting Brackets. 5.10.2-8
Figure 5.10.2.7 Finite Element Model of Starboard DS Integrated with Full Payload.....5.10.2-11
Section 5.10.3 ***TRD Gas Ballistic Cover Assembly***
Figure 5.10.3.2-1 DWG SEG39137915, TRD Gas Ballistic Cover Assy 5.10.3-4
Figure 5.10.3.2-2 Outer Skin Adjacent Free Edge Seams 5.10.3-4
Figure 5.10.3.2-3 TRD Gas Ballistic Cover Standoff Bracket A and Standoff Bracket B 5.10.3-5
Figure 5.10.3.3-1 View of Full Payload Showing Port Debris Shield Covering TRD Gas Supply 5.10.3-8
Figure 5.10.3.3-2 View of Full Payload Without Port Debris Shield Covering TRD Gas Supply.....5.10.3-8
Figure 5.10.3.3-3 Isolated View of TRD Gas Ballistic Cover Assembly for the TRD Gas Supply.....5.10.3-9
Figure 5.10.3.3-4 Isolated View of TRD Gas Ballistic Cover Assembly for the TRD Gas Supply.....5.10.3-9
Figure 5.10.3.3-5 View of Payload from Bottom Showing Location of TRD Gas Ballistic Cover Assy .5.10.3-10
Section 5.11.6.3 ***ROEU PDA Bracket, Pin, and Lug Analysis***
Figure 1 ROEU Clevis Assembly and PDA Mounting Bracket.....5.11.6.3-3
Figure 2 Clevis and Bracket Attachment 5.11.6.3-3
Figure 3 Detail from Drawing SEG39137677 .....5.11.6.3-4
Figure 4 Generic Lug Dimensions 5.11.6.3-4
Figure 5 Areas of Lug for Calculating Shape Parameters.....5.11.6.3-4
Figure 6 Location of the Centroid of the Fastener Group.....5.11.6.3-7
Figure 7 CG of Bolt Pattern 5.11.6.3-8
Figure 8 Clevis, Lug, Pin, and Screw Locations.....5.11.6.3-9
Section 5.12.1 ***Handle Brackets***
Figure 5.12.1-1 Typical Location of Handle Bracket -303 on USS-02 Assembly 5.12.1-4
Figure 5.12.1-2 Loads Coordinate System 5.12.1-6
Figure 5.12.1-3 Handle Bracket -303 and Rail Post Assembly Configuration.....5.12.1-7
Figure 5.12.1-4 Typical Location of Handle Bracket -305 on USS-02 Assembly 5.12.1-11
Figure 5.12.1-5 Loads Coordinate System 5.12.1-13
Figure 5.12.1-6 Handle Bracket -305 and Rail Post Assembly Configuration.....5.12.1-14
Section 5.13 ***Interface Panel A***
Figure 5.13-1 Interface Panel A Attached to USS-02 Upper and Lower Trunnion Bridge Beams.....5.13-3
Figure 5.13-2 Front View of IPA with Cover Plate and Cable Connectors 5.13-4
Figure 5.13-3 Front View of IPA with Cover Plate Removed 5.13-5
Figure 5.13-4 Front View of IPA Finite Element Math Model 5.13-7
Figure 5.13-5 Finite Element Model of IPA Integrated with Full Payload.....5.13-11
Figure 5.13-6 Finite Element Model of IPA Integrated with Full Payload, Zoomed View.....5.13-12

0.6 Table of Tables

Table Number	Figure Description	Page Number
Table 0.3.1-1	USS-02 Minimum Margin of Safety Summary	ix
Table 0.3.1-2	Upper USS-02 Fasteners Minimum Margin of Safety Summary	xviii
Table 0.3.1-3	Upper USS-02 Rivets Minimum Margin of Safety Summary	xx
Table 0.3.1-4	Vacuum Case Minimum Margin of Safety Summary	xxii
Table 0.3.1-5	Vacuum Case Fastener Minimum Margin of Safety Summary	xxiv
Table 0.3.1-6	Payload Attach System Minimum Margin of Safety Summary	xxvi
Table 0.3.1-7	Payload Attach System Fastener Minimum Margin of Safety Summary	xxviii
Table 0.3.1-8	Integration Hardware Minimum Margin of Safety Summary	xxx
Table 0.3.1-9	Integration Hardware Fastener Minimum Margin of Safety Summary	xxxii
Table 0.3.1-10	Miscellaneous Hardware Minimum Margin of Safety Summary	xxxv
Table 0.3.1-11	Miscellaneous Hardware Fastener Minimum Margin of Safety Summary	xxxv
Table 0.4.1-1	Upper USS-02 Fastener Fail-Safe Minimum Margin of Safety Summary	xxxvi
Table 0.4.1-2	Vacuum Case Fastener Fail-Safe Minimum Margin of Safety Summary	xxxix
Table 0.4.1-3	Payload Attach System Fastener Fail-Safe Min Margin of Safety Summary	xlii
Table 0.4.1-4	Integration Hardware Fastener Fail-Safe Min Margin of Safety Summary	xliii
Table 0.4.1-5	Miscellaneous Hardware Fastener Fail-Safe Min Margin of Safety Summary	xlvi
Section 2.1.1	***Upper Vacuum Case Interface Joint***	
Table 2.1.1-1	Minimum Margin of Safety Summary	2.1.1-2
Table 2.1.1-2	Max. stresses of the Upper VC Joints	2.1.1-9
Section 2.1.2	***Upper Trunnion Bridge Beam Assembly***	
Table2.1.2-1a	Property about Y-Y axis	2.1.2-5
Table2.1.2-1b	Property about Z-Z axis	2.1.2-5
Table2.1.2-1c	First Moment about Y-Y axis	2.1.2-5
Table2.1.2-1d	First Moment about Z-Z axis	2.1.2-5
Section 2.1.3	***Sill Joint***	
Table 1	Strap Forces From Load Model 6-02	2.1.3-7
Table 2	Strap Forces From Sill Joint Model	2.1.3-7
Table 3	Percent Difference Of Strap Forces Between Load Model And Strap-Port Model	2.1.3-7
Table 1	Check of the Trunnion Loads	2.1.3-8
Section 2.1.7	***Lower Trunnion Bridge Beam Elbow***	
Table 2.1.7-1	Minimum Margin of Safety Summary	2.1.7-2
Table 2.1.7-2	FEM Numbering Scheme for the Bridge Beam Elbow Joint	2.1.7-5
Table 2.1.7-3	FEM Numbering for the Bridge Beam Elbow Joint Solid-to-Plate Elem Connections	2.1.7-6
Section 2.1.8	***Lower Trunnion Bridge Beam Assembly***	
Table2.1.8-1a	Property about Y-Y axis	2.1.8-5
Table2.1.8-1b	Property about Z-Z axis	2.1.8-5
Table2.1.8-1c	First Moment about Y-Y axis	2.1.8-5
Table2.1.8-1d	First Moment about Z-Z axis	2.1.8-5
Section 2.1.9	***Lower Vacuum Case Interface Joint***	
Table 2.1.9-1	Minimum Margin of Safety Summary	2.1.9-2
Table 2.1.9-2	Inputs of Finite Element Model of Lower VC Joints	2.1.9-5
Table 2.1.9-3	Eigenvalue Summary of Lower VC Joint Model	2.1.9-7
Table 2.1.9-4	Strap Loads (lbf) in Load Model 2-04	2.1.9-8
Table 2.1.9-5	Strap Loads (lbf) in Lower VC Joint	2.1.9-8
Table 2.1.9-6	Load Differences (lbf) between Two Models	2.1.9-9
Section 2.1.10	***Sill Bracket***	
Table 1	Element Identification for Support Rings Finite Element Model	2.1.10-4
Section 2.2.1	***Primary Centerbody Box Joint***	
Table 1	Minimum Margin of Safety Summary	2.2.1-2
Table 2	Maximum Stresses and the Elements with Worst Load Cases	2.2.1-14
Section 2.2.3	***EMC Box Tube***	

Table 2.2.3-1a Property about Y-Y axis 2.2.3-4
Table 2.2.3-1b Property about Z-Z axis 2.2.3-5
Table 2.2.3-1c Property about Y-Y axis 2.2.3-5
Table 2.2.3-1d Property about Z-Z axis 2.2.3-5
Section 2.2.4 ***Lower USS to Upper USS Joint***
Table 2.2.4-1 Minimum Margin of Safety Summary 2.2.4-2
Table 2.2.4-2 Inputs of Finite Element Model of Lower USS to Upper USS Joints 2.2.4-6
Table 2.2.4-3 Eigenvalue Summary of Lower USS to Upper USS Joint Detail Model 2.2.4-8
Table 2.2.4-4 Strap Load Differences (lbf) between Two Models 2.2.4-9
Table 2.2.4-5 Trunnion Load Differences (lbf) between Two Models 2.2.4-10
Section 2.2.5 ***RICH Mounting Bracket***
Table 2.2.5-1 Minimum Margin of Safety Summary 2.2.5-3
Table 2.2.5-2 Inputs of Finite Element Model of RICH Brackets 2.2.5-5
Table 2.2.5-3 Eigenvalue Summary of RICH Brackets Model 2.2.5-7
Table 2.2.5-4 Strap Loads (lbf) in Load Model 2-04 ..... 2.2.5-8
Table 2.2.5-5 Strap Loads (lbf) in RICH Brackets Model 2.2.5-8
Table 2.2.5-6 Load Differences (lbf) between Two Models 2.2.5-8
Table 6.1.4.1-1 Cargo Bay Wall Temperature 2.2.5-10
Section 2.2.6 ***Lower Angle Beam Assembly***
Table 2.2.6-1a Property about Y-Y axis 2.2.6-5
Table 2.2.6-1b Property about Z-Z axis 2.2.6-5
Table 2.2.6-1c First Moment about Y-Y axis 2.2.6-5
Table 2.2.6-1d First Moment about Z-Z axis 2.2.6-5
Section 2.2.7 ***PAS RICH Bracket***
Table 2.2.7-1 Minimum Margin of Safety Summary 2.2.7-2
Table 2.2.7-2 Inputs of Finite Element Model of PAS-RICH Brackets 2.2.7-5
Table 2.2.7-3 Eigenvalue Summary of PAS-RICH Brackets Model 2.2.7-7
Table 2.2.7-4 Interface Loads (lbf) in Load Model 2-04 ..... 2.2.7-8
Table 2.2.7-5 Interface Loads (lbf) in PAS-RICH Brackets Model 2.2.7-8
Table 2.2.7-6 Load Differences (lbf) between Two Models 2.2.7-8
Section 2.3.2 ***Keel Block***
Table 2.3.2-1 Minimum Margin of Safety Summary 2.3.2-2
Table 2.3.2-2 Inputs of Finite Element Model of Keel Block 2.3.2-5
Table 2.3.2-3 Eigenvalues of Finite Element Model of Keel Block 2.3.2-7
Table 2.3.2-4 Interface loads (lbf) in Load Model 2-04 ..... 2.3.2-8
Table 2.3.2-5 Interface loads (lbf) in Keel-Block Model 2.3.2-8
Table 2.3.2-6 Load Differences (lbf) Between Two Models 2.3.2-8
Section 2.5.2.4 ***RICH Bracket to EMC Box Tubes Rivet Analysis***
Table 2.5.2.4-1 Minimum Margin of Safety Summary 2.5.2.4-2
Table 2.5.2.4-2 Inputs of Finite Element Model of RICH Brackets 2.5.2.4-6
Table 2.5.2.4-3 Eigenvalue Summary of RICH Brackets Model 2.5.2.4-8
Table 2.5.2.4-4 Strap Loads (lbf) in Load Model 2-04 ..... 2.5.2.4-9
Table 2.5.2.4-5 Strap Loads (lbf) in RICH Brackets Model 2.5.2.4-9
Table 2.5.2.4-6 Load Differences (lbf) between Two Models 2.5.2.4-9
Section 2.5.2.5 ***RICH PAS Brackets to EMC Box Tubes Rivet Analysis***
Table 2.5.2.5-1 Minimum Margin of Safety Summary 2.5.2.5-2
Table 2.5.2.5-2 Inputs of Finite Element Model of PAS-RICH Brackets 2.5.2.5-6
Table 2.5.2.5-3 Eigenvalue Summary of PAS-RICH Brackets Model 2.5.2.5-8
Table 2.5.2.5-4 Interface Loads (lbf) in Load Model 2-04 ..... 2.5.2.5-9
Table 2.5.2.5-5 Interface Loads (lbf) in PAS-RICH Brackets Model 2.5.2.5-9
Table 2.5.2.5-6 Load Differences (lbf) between Two Models 2.5.2.5-9
Section 3.2.1 ***Outer Cylinder Strength Assessment***
Table 3.2.1-1 KGG for Outer Cylinder Model 3.2.1-7
Table 3.2.1-2 KNN for Outer Cylinder Model 3.2.1-7
Table 3.2.1-3 KFF for Outer Cylinder Model 3.2.1-7
Table 3.2.1-4 Rigid Body Modes for Outer Cylinder Model 3.2.1-8

Table 3.2.1-5 Mass for Stress and Loads Model and CG for Outer Cylinder Model....3.2.1-8
Table 3.2.1-6 CG Location for AMS-02 in the Orbiter Z Location 3.2.1-8
Table 3.2.1-7 Critical Load Case load Factors for Outer Cylinder Model....3.2.1-9
Table 3.2.1-8 Mass Calculated from Trunnion Forces vs Mass of Stress Model....3.2.1-9
Table 3.2.1-9 Trunnion Loads Due to 1 atm Pressure Only....3.2.1-10
Table 3.2.1-10 Highest Stresses for Outer Cylinder Model....3.2.1-11
Section 3.2.2 ***Outer Cylinder Stability Assessment***
Table 3.2.2-1 Point to Point Margin of Safety Summary 3.2.2-7
Section 3.3.1 ***Inner Cylinder Strength Assessment***
Table 3.3.1-1 KGG for Inner Cylinder Model....3.3.1-8
Table 3.3.1-2 KNN for Inner Cylinder Model 3.3.1-8
Table 3.3.1-3 KFF for Inner Cylinder Model 3.3.1-9
Table 3.3.1-4 Rigid Body Modes for Inner Cylinder Model 3.3.1-9
Table 3.3.1-5 Mass for Stress and Loads Model and CG for Inner Cylinder Model 3.3.1-9
Table 3.3.1-6 CG Location for AMS-02 in the Orbiter Z Location 3.3.1-10
Table 3.3.1-7 Critical Load Case Load Factors for Inner Cylinder Model 3.3.1-11
Table 3.3.1-8 Strap Force loads Comparison of 2-03 Loads model vs Inner Cylinder Model 3.3.1-12
Table 3.3.1-9 Mass Calculated from Trunnion Forces vs Mass of Stress Model....3.3.1-12
Table 3.3.1-10 Highest Stresses for Inner Cylinder Model 3.3.1-13
Table 3.3.1-11 Critical LC Load Factor Combinations for Inner Cylinder to Conical Flange Weld 3.3.1-18
Table 3.3.1.2-2 Highest Weld Stress for Inner Cylinder to Conical Flange....3.3.1-18
Section 3.4 ***Upper Support Ring***
Table 3.4-1 Minimum Margin of Safety Summary....3.4-2
Table 3.4-2 Files Used 3.4-6
Table 3.4-3 Naspost RBE2 Compression Check 3.4-8
Table 3.4-4 VC Model Files....3.4-8
Table 3.4-5 Configuration 13 Job File List....3.4-9
Table 3.4-6 Configuration 13 File List 3.4-10
Table 3.4-7 Modes Frequency Fixed....3.4-12
Table 3.4-8 Strain energy Check....3.4-13
Table 3.4-9 Zero Margin Stress....3.4-15
Table 3.4-10 Element Recovered Stress 3.4-16
Table 3.4-11 Stress of Elements Surrounding Element 8007579....3.4-20
Table 3.4-12 Element Area Calculations....3.4-21
Table 3.4-13 Compressive Stress Calculations 3.4-22
Section 3.5 ***Lower Support Ring***
Table 3.5-1 Minimum Margin of Safety Summary....3.5-2
Table 3.5-2 Files Used 3.5-6
Table 3.5-3 Naspost RBE2 Compression Check 3.5-8
Table 3.5-4 VC Model Files....3.5-8
Table 3.5-5 Configuration 13 Job File List....3.5-9
Table 3.5-6 Configuration 13 File List 3.5-10
Table 3.5-7 Modes Frequency Fixed....3.5-12
Table 3.5-8 Strain energy Check....3.5-13
Section 3.9 ***Feedthru Port Cover Plate***
Table 3.9.1-1 Minimum Margin of Safety Summary....3.9-2
Table 3.9.2-1 Description of Load Cases Showing Pressure and Inertia Combinations 3.9-3
Table 3.9.2-2 Load Cases for Assessment of Fasteners 3.9-4
Section 4.0 ***Strength Assessment of Payload Attach System Assembly***
Table 4.0-1 Natural Modes of AMS/PAS On-orbit....4.0-12
Table 4.0-2 Stiffness Calculations of PAS....4.0-14
Section 4.1 ***Vertex Bracket***
Table 4.1-1 Minimum Margin Of Safety Summary 4.1-2
Table 4.1.5-1 Fixed Strain Energy Check 4.1-6
Table 4.1.5-2 Free Free Strain Energy Check 4.1-7
Table 4.1.5-3 Fully Fixed Strain Energy Check....4.1-7

Table 4.1.5-4 Fixed Modes 4.1-7
Table 4.1.5-5 Free Free Modes 4.1-8
Table 4.1.5-6 Fully Fixed Modes 4.1-8
Table 4.1.5-7 Fixed Mass Information 4.1-8
Table 4.1.5-8 Free Free Mass Information 4.1-8
Table 4.1.5-9 Fully Fixed Mass Information 4.1-9
Table 4.1.7-1 Allowable For Vertex Bracket 4.1-9
Table 4.1.7-2 Stress Analysis For On-Orbit Load Cases 4.1-9
Table 4.1.7-3 Stress Analysis For Liftoff Load Cases 4.1-10
Table 4.1.7-4 Stress Analysis For Landing Load Cases 4.1-10
Table 4.1.7-5 Vertex Bracket Low Margin Table 4.1-11
Table 4.1.7-6 Table Of Margins For Consistent On-Orbit Load Factor Cases 4.1-13
Section 4.2 ***Aft Bracket***
Table 4.2-1 Minimum Margin Of Safety Summary 4.2-2
Table 4.2-2 Landing Solid Element Stress Sort 4.2-4
Table 4.2-3 Landing Plate Element Stress Sort 4.2-5
Table 4.2-4 Liftoff Solid Element Stress Sort 4.2-6
Table 4.2-5 Liftoff Plate Element Stress Sort 4.2-6
Table 4.2-6 On-Orbit Solid Element Stress Sort 4.2-7
Table 4.2-7 On-Orbit Plate Element Stress Sort 4-2-8
Table 4.2-8 Table of Elements With Negative Margins and New Stress Values Used in Analysis 4.2-9
Table 4.2-9 Plate Elements Sort Excluding The Two Elements With Negative Margins 4.2-10
Table 4.2-10 On-Orbit Solid Element Stress Sort, Excluding Misshaped Elements 4.2-12
Section 4.3 ***PAS Platform Assembly***
Table 4.3-1 Minimum Margin Of Safety Summary 4.3-2
Table 4.3-2 PAS Platform Stresses For Liftoff, On-Orbit, and Landing 4.3-4
Table 4.3-3 PAS Platform Liftoff Minimum Margins 4.3-4
Table 4.3-4 PAS Platform On-Orbit Minimum Margins 4.3-4
Table 4.3-5 PAS Platform Landing Minimum Margins 4.3-4
Section 4.4 ***Guide Pins***
Table 4.4-1 Minimum Margin Of Safety Summary 4.4-2
Section 4.6 ***PAS Bridge Bracket***
Table 4.6-1 Minimum Margin Of Safety Summary 4.6-2
Table 4.6-2 Material Allowables 4.6-4
Section 4.8 ***Bridge Pin***
Table 4.8-1 Minimum Margin Of Safety Summary 4.8-2
Section 5.1 ***UMA Bracket***
Table 5.1-1 Minimum Margin of Safety Summary 5.1-2
Table 5.1-2 Fasteners Minimum Margin of Safety Summary 5.1-2
Table 5.1-3 Fail-Safe Fastener Minimum Margin of Safety Summary 5.1-2
Table 5.1-4 Inputs of Finite Element Model of UMA Bracket 5.1-4
Table 5.1-5 Eigenvalue Summary of UMA Bracket 5.1-6
Section 5.2 ***PVGF Bracket***
Table 5.2-1 Minimum Margin of Safety Summary 5.2-2
Table 5.2-2 Inputs of Finite Element Model of PVGF Bracket 5.2-5
Table 5.2-3 Eigenvalue Summary of PVGF Bracket 5.2-6
Section 5.4 ***FRGF Bracket***
Table 5.4-1 Minimum Margin of Safety Summary 5.4-2
Table 5.4-2 Inputs of Finite Element Model of FRGF Bracket 5.4-5
Table 5.4-3 Eigenvalue Summary of FRGF Bracket 5.4-6
Section 5.8 ***Scuff Plate***
Table 5.8-1 Minimum Margin of Safety Summary 5.8-2
Table 5.8-2 Inputs of Finite Element Model of Scuff Plate 5.8-6
Table 5.8-3 Eigenvalue Summary of Scuff Plate 5.8-8
Section 5.9 ***EVA Connector Panel Assembly***
Table 5.9-1 Minimum Margin of Safety Summary 5.9-2

Table 5.9-2 Fasteners Minimum Margin of Safety Summary 5.9-2
Table 5.9-3 Fail-Safe Fastener Minimum Margin of Safety Summary 5.9-2
Table 5.9-4 Inputs of Finite Element Model of EVA Connector Panel 5.9-4
Table 5.9-5 Eigenvalue Summary of EVA Connector Panel 5.9-6
Section 5.10.1 ***Port Debris Shield Assembly***
Table 5.10.1.1 Parts Minimum Margins of Safety 5.10.1-2
Table 5.10.1.2 Fastener Minimum Margins of Safety 5.10.1-2
Table 5.10.1.3 Fastener Fail-Safe Minimum Margins of Safety 5.10.1-3
Table 5.10.1.4 Launch/Landing Design Limit Load Factors for Small Secondary Structures 5.10.1-8
Table 5.10.1.5 Second DCLA Liftoff and Landing Load Factors 5.10.1-9
Table 5.10.1.6 Material Allowables 5.10.1-9
Section 5.10.2 ***Starboard Debris Shield Assembly***
Table 5.10.2.1 Parts Minimum Margins of Safety 5.10.2-2
Table 5.10.2.2 Fastener Minimum Margins of Safety 5.10.2-2
Table 5.10.2.3 Fastener Fail-Safe Minimum Margins of Safety 5.10.2-3
Table 5.10.2.4 Launch/Landing Design Limit Load Factors for Small Secondary Structures 5.10.2-8
Table 5.10.2.5 Second DCLA Liftoff and Landing Load Factors 5.10.2-9
Table 5.10.2.6 Material Allowables 5.10.2-9
Section 5.10.3 ***TRD Gas Ballistic Cover Assembly***
Table 5.10.3.1.1 Parts Minimum Margins of Safety 5.10.3-2
Table 5.10.3.1.2 Parts Minimum Margins of Safety, Fail-Safe 5.10.3-2
Table 5.10.3.1.3 Fastener Minimum Margins of Safety 5.10.3-2
Table 5.10.3.1.4 Fastener Minimum Margins of Safety, Fail-Safe 5.10.3-3
Table 5.10.3.2.1 Launch/Landing Design Limit Load Factors for Small Secondary Structures 5.10.3-5
Table 5.10.3.2.2 Second DCLA Liftoff and Landing Load Factors 5.10.3-5
Table 5.10.3.2.3 Material Allowables 5.10.3-6
Section 5.11.9 ***Scuff Plate to Sill Joint Bolt Analysis***
Table 5.11.9-1 Fastener Minimum Margins of Safety Summary 5.11.9-2
Table 5.11.9-2 Fail-Safe Fastener Minimum Margins of Safety Summary 5.11.9-2
Section 5.11.11 ***Interface Panel A to USS-02 Trunnion Bridge Beam Bolt Analysis***
Table 5.11.11-1 Minimum Margins of Safety 5.11.11-2
Section 5.12.1 ***Handle Brackets***
Table 5.12.1-1 Minimum Margin of Safety Summary for Handle Bracket -303 ..... 5.12.1-2
Table 5.12.1-2 Minimum Margin of Safety Summary for Handle Bracket -305 ..... 5.12.1-2
Table 9 Interface Forces, Top Mounted Handrails Long Handrails, Ref 1 ..... 5.12.1-5
Table 5.12.1-3 Worst Load Cases Summary for Handle Bracket -303 ..... 5.12.1-6
Table 5.12.1-4 Eigenvalues Summary for Handle Bracket -303 ..... 5.12.1-10
Table 10 Interface Forces, Top Mounted Short Handrails, Ref 1 ..... 5.12.1-12
Table 5.12.1-5 Worst Load Cases Summary for Handle Bracket -305 ..... 5.12.1-13
Table 5.12.1-6 Eigenvalues Summary for Handle Bracket -305 ..... 5.12.1-17
Section 5.12.2 ***Handle Bracket Bolt Analysis***
Table 5.12.2-1 Minimum Margins of Safety Summary for Handle Bracket Bolts 5.12.2-2
Table 5.12.2-2 Minimum Fail-Safe Margins of Safety Summary for Handle Bracket Bolts 5.12.2-2
Section 5.13 ***Interface Panel A***
Table 5.13-1 Minimum Margin of Safety Summary 5.13-2
Table 5.13-2 Fasteners Minimum Margin of Safety Summary 5.13-2
Table 5.13-3 Launch/Landing Design Limit Load Factors for Small Secondary Structures 5.13-10
Table 5.13-4 Second DCLA Liftoff and Landing Load Factors 5.13-10

0.7 Acronyms

ACC	Anti-Coincidence Counter
AMS	Alpha Magnetic Spectrometer
AMS-02	Alpha Magnetic Spectrometer – 02 (ISS Mission)
BOSOR	Buckling of Shells of Revolution
CAB	Cryomagnet Avionics Box
CAS	Common Attach System
CDR	Critical Design Review
CERN	Centre Européen de Recherche Nucléaire
CG	Center of Gravity
CMR	Cold-Mass Replica
DCLA	Design Cycle Coupled Loads Analysis
DP	Design Pressure
ECAL	Electromagnetic Calorimeter
EMC	Electro-magnetic Compatibility
EMI	Electro-magnetic Interference
ETH	Eidgenossische Technische Hochschule (Zurich)
EVA	Extravehicular Activity
EVR	Extravehicular Robotics
FRGF	Flight Releasable Grapple Fixture
FS	factor of safety
g	gravity
GMAW	Gas Metal Arc Welding
GTAW	Gas Tungsten Arc Welding
ICD	Interface Control Document
IHEP	Institute of High Energy Physics
INFN	Instituto Nazionale di Fisica Nucleare (Italy)
ISS	International Space Station
JS	Jacobs Sverdrup
JSC	Johnson Space Center
KSC	Kennedy Space Center
LESC	Lockheed Engineering and Sciences Company (Now LMSO)
LM	Lockheed Martin
LMATC	Lockheed Martin Advanced Technology Center
LMMSS	Lockheed Martin Michoud Space Systems
LMSO	Lockheed Martin Space Operations
MDP	Maximum Design Pressure
MEFL	Maximum Expected Flight Level
MIT	Massachusetts Institute of Technology
MMOD	Micro-Meteoroid and Orbital Debris
MS	Margin of Safety
MSFC	Marshall Space Flight Center
MWL	Minimum Workmanship Level
n/a	not applicable

NASTRAN	National Aeronautics and Space Administration Structural Analysis Computer Program
NBL	Neutral Buoyancy Laboratory
NSTS	National Space Transportation System
PAS	Payload Attach System
PAW	Plasma Arc Welding
PCU	Plasma Contactor Unit
PDR	Preliminary Design Review
PEDS	Passive Electrical Disconnect System
PVGF	Power Video Grapple Fixture
RICH	Ring Imaging Cherenkov Counter
ROEU	Remotely Operated Electrical Umbilical
SED	Structural Engineering Division
SFHe	Superfluid Helium
SHOOT	Superfluid Helium On-Orbit Transfer
SRMS	Shuttle Remote Manipulator System
SSP	Space Station Program
SSRMS	Space Station Remote Manipulator System
STA	Structural Test Article
STE	Special Test Equipment
STS	Space Transportation System
SWG	Structures Working Group
TBD	To Be Determined
TCS	Thermal Control System
TOF	Time of Flight
TRD	Transition Radiation Detector
UF	Uncertainty Factor
UF-4.1	Space Station Utilization Flight #4.1
UMA	Umbilical Mechanism Assembly
USS	Unique Support Structure
USS-02	Unique Support Structure – 02
VC	Vacuum Case
VLA	Verification Loads Analysis

0.8 References

1. Boeing, Canoga Park, California. *ISS Plasma Contactor Unit (PCU) Xenon Tank Damping and Fluid-Structure Interaction* (EID-02322-1), PCU Critical Design Review (CDR) Package, May 23, 1997.
2. Boeing, Canoga Park, California. *Fracture and Stress Analysis Report of Sphere, Xenon Storage, Filament Wound* (EID-02325), PCU CDR Package, April 16, 1997.
3. Boeing, Downey, California. *Space Shuttle Structural Math Model and Forcing Function Delivery* (TM 270-400-99-081), August 30, 1999.
4. Department of Defense. *Military Handbook: Metallic Materials and Elements for Aerospace Vehicle Structures* (MIL-HDBK-5H), December 1998, (Chapters 1-9 and Appendices A-E).
5. Lockheed Engineering and Sciences Company (LESC), Houston, Texas. *Mass Acceleration Curves for Trunnion Mounted Payload Components* (SMD-93-0287), May 7, 1993.
6. Lockheed Martin Space Missions Systems & Services (LMSMSS), Houston, Texas. *Report of Flight Accelerations Recorded by the WBSAAMD on STS-91* (HDID-SAS-98-0247), July 23, 1998.
7. National Aeronautics and Space Administration (NASA), Washington, D. C. *Fracture Control Requirements for Payloads Using the Space Shuttle* (NASA-STD-5003), October 1996.
8. NASA, Houston, Texas. *Alpha Magnetic Spectrometer Structural Verification Plan for the STS Flight #91 Precursor Flight Rev. A* (JSC-27378), August, 1997.
9. NASA, International Space Station (ISS), Houston, Texas. *Attached Payload Interface Requirements Document* (SSP-57003), September 1999.
10. NASA, ISS, Houston, Texas. *Attached Payload Interface Control Document* (SSP-57004), September 1999.
11. NASA, Lyndon B. Johnson Space Center, Houston, Texas. *Simplified Design Options for STS Payloads* (JSC-20545A), April 1988.
12. NASA, JSC, Houston, Texas. *Criteria for Preloaded Bolts* (NSTS 08307A), July 1998, (Change No. 3).
13. NASA, JSC, Houston, Texas. *Payload Safety Review and Data Submittal Requirements for Payload Using the Space Shuttle/ISS* (NSTS 13830, Rev. C), July 1998 (Change No. 1, Feb., 1999).
14. NASA, JSC, Houston, Texas. *Safety Policy and Requirements for Payloads Using the Space Transportation System* (NSTS 1700.7B), January 1989 (Change Package No. 15, April, 2003). ***OR*** NASA, JSC, Houston, Texas. *Safety Policy and Requirements for Payloads Using the International Space Station* (NSTS 1700.7B, ISS Addendum), December 1995 (Change Package No. 5, January, 2003).
15. NASA, JSC, Houston, Texas. *International Space Station Interface Definition Document, Rev. A* (NSTS-21000-IDD-ISS), February 18, 1998.
16. NASA, JSC, Houston, Texas. *JSC Fastener Integrity Testing Program* (JSC-23642C), June 1992.
17. NASA, JSC, Houston, Texas. *Fracture Control Plan for JSC Flight Hardware* (JSC-25863, Rev. A), August 1998.
18. NASA, JSC, Houston, Texas. *Space Shuttle Ground Support Equipment General Design Requirements* (SW-E-0002E-Book 2, Rev. E), February 1992 (Change No. 63, August, 1995).

19. NASA, JSC, Houston, Texas. *Payload Verification Requirements* (NSTS 14046E), March, 2000 (Change No. 3, August, 2003).
20. NASA, JSC, Houston, Texas. *Fracture Control Requirements for Space Station* (SSP-30558C), August, 2001.
21. NASA, LMSO, Houston, Texas. *Requests for Shuttle Math Models and Forcing Functions* (E-mail Request), August 5, 1999.
22. NASA Kennedy Space Center, Florida. *Space Transportation System Payload Ground Safety Handbook* (KHB 1700.7C), August 1999.
23. NASA Marshall Space Flight Center (MSFC), Huntsville, Alabama. *Guidelines for the Selection of Metallic Materials for Corrosion Cracking* Resistance in Sodium Chloride Environments (MSFC-STD-3029), May, 2000.
24. NASA Office of Safety and Mission Quality, Washington, D. C., *Safety Standard for Lifting Devices and Equipment* (NSS/GO-1740.9B), November 1991.
25. NASA/Canadian Space Agency (CSA), Houston, Texas. *Mobile Servicing System to User (generic) Interface Control Document, Part 1,* Rev. D (SSP-42004), May 1, 1996.
26. NASA Johnson Space Center, Houston, Texas. *Alpha Magnetic Spectrometer – Second Mission (ES2-99-027)*, August 11, 1999.
27. Journal of Applied Mechanics, *Experimental and Theoretical Studies of Liquid Sloshing at Simulated Low Gravity*, Dodge, F.T. and Garza, L.R., September, 1967.
28. Boeing, Downey, CA. SD 74-SH-0002B
29. NASA, JSC, Houston, Texas. *Structural Design and Verification Requirements for the ISS*, Rev. C (SSP-30559), September, 2000.
30. NASA, JSC, Houston, Texas. *Structural Integration Analyses Responsibility Definition for Space Shuttle Vehicle and Cargo Element Developers* (NSTS 37329 Rev. B), January 2001.
31. NASA, JSC, Houston, Texas. *Interpretations of NSTS/ISS Payload Safety Requirements* (NSTS/ISS 18798B), September 1997 (Change Package No. 3, Dec. 10, 1998).
32. NASA, JSC, Houston, Texas. *Process Specification for the Manual Arc Welding of Aluminum Alloy Flight Hardware*, Rev. B (PRC-0001), July 1999.
33. NASA, JSC, Houston, Texas. *Process Specification for the Qualification of Manual Arc Welders*, Rev. A (PRC-0008), July 1999.
34. Oxford Instruments Ltd, Eynsham, England. *Practical Cryogenics*, 1996.
35. NASA, JSC, Houston, Texas. *AMS-02 to ISS Hardware ICD* (SSP-57213), Not Yet Released.
36. LMSO, Houston, Texas. *Helium Slosh Loads for the Alpha Magnetic Spectrometer Helium Tank,* MSAD-00-0062, November 19, 1999.
37. MSFC, Huntsville, Alabama. *Torque Limits for Standard Threaded Fasteners,* MSFC-STD-486B, November 1992.
38. MSFC, Huntsville, Alabama. *Welding Aluminum Alloys*, MSFC-STEC-504C, November 20, 1990.
39. Space Cryomagnetics Limited, *Test Procedure for Small Scale Loss of Vacuum Demonstration*, S. Harrison, Jan. 2001.
40. Space Cryomagnetics Limited, *Final Report on Small Scale Loss of Vacuum Demonstration*, S. Harrison.
41. Lockheed Martin, *Creep in Cryomagnet Composite Straps for Alpha Magnetic Spectrometer (AMS)*, AMS-02-01-1, T.D. Martin, July 17, 2001.
42. Crompton Technology Group, *Preliminary Report of The Development and Production of Cryogenic Suspension Systems for ETH Space Magnet*, Davidson, et al., October 22, 2001.

43. ARDE, Inc., Qualification by Similarity Report of Sphere, Xenon Storage Filament Wound PN D4815 to PN D4636 for TRD Gas Supply System, EG 10330, A. Escalona, July 6, 2001
44. ARDE, Inc., Qualification by Similarity Report of Sphere, CO2 Storage Filament Wound PN D4816 to PN D4683 for TRD Gas Supply System, EG 10331, A. Escalona, July 6, 2001
45. NASA-JSC, *Memo approving JSC-28792 Rev. A*, ES2-01-40, V. Fogt, October 10, 2001
46. Harrison G. 2006 September 12. Cargo Loads [Cargolux Airlines IAH Vendor Communication]. Accessed 2006 September 18.
47. Formulas for Stress, Strain, and Structural Matrices, by Walter D. Pilkey.
48. JSC 26626A, *Extravehicular Activity (EVA) Hardware Generic Design Requirements Document*, Lyndon B. Johnson Space Center, NASA, May 1995
49. NASA-STD-5001, *Structural Design and Test Factors of Safety for Space Flight Hardware*
50. NSTS-08307, *Criteria for Preloaded Bolts*, NASA Johnson Space Center, July 1998.
51. SSP 30559 Revision C, *Structural Design and Verification Requirements International Space Station (September 2000)*.
52. Warren C. Young, *Roark's Formulas for Stress and Strain, 7th Edition, McGraw-Hill Book Company, Inc*.
53. Thomas P. Sarafin, *Spacecraft Structures and Mechanisms from Concept to Launch,* Space Technology Library.
54. MIL-HDBK-5H/J, *Military Handbook: Metallic Materials and Elements for Aerospace Vehicle Structures*.
55. MMPDS-01/03, *Metallic Materials Properties Development and Standardization*.
56. *Structural Engineering Handbook*, 2nd ed., McGraw Hill Publishing, New York, 1979.
57. Bruhn, E.F., *Analysis and Design of Flight Vehicle Structures*, Jacobs Publishing, Inc, 1973.
58. *Astronautics Structures Manual, Structures and Propulsion Laboratory,* NASA Marshall Space Fight Center.
59. NSTS 1700.7, *ISS Addendum, Safety Policy and Requirements Document for Payloads Using the International Space Station.*

1.0 Introduction

The NASA project management for the AMS-02 comes from the Office of the Director (code EA1) of the Engineering Directorate at JSC. Jacobs Engineering Sciences Contract Group (ESCG) is contracted by NASA to provide integration of the AMS-02 payload to the Space Shuttle and the ISS. Jacobs ESCG is responsible for designing, analyzing, and fabricating the Unique Support Structure-02 (USS-02) with an integral cryogenic magnet Vacuum Case for the AMS-02.

The science objectives of the AMS-02 experiment are to conduct astrophysical research and to search for dark matter and antimatter. To acquire this scientific data, the AMS-02 will employ a very large cryogenic superfluid helium electro-magnet, a Transition Radiation Detector (TRD), two Time of Flight (TOF) detectors, a tracker composed of eight layers of silicon wafer detectors, an Anti-Coincidence Counter (ACC), a Ring Imaging Cherenkov Counter (RICH), an Electromagnetic Calorimeter (ECAL), as well as numerous electronics and other avionics devices.

The AMS-02 will remain on ISS through the lifetime of the station. It consists of a cryogenic superconducting magnet, cooled by superfluid helium, and a USS to support the experiment on the Shuttle.

The Vacuum Case of the magnet is an integral part of the USS-02, and will be built and certified by Jacobs ESCG. There will be two (2) Vacuum Cases built: a Structural Test Article (STA) and a flight article. The STA will be used to demonstrate fabrication and assembly techniques and for structural verification testing. The STA will be built as a flight spare, and is therefore identical to the flight article.

The experiment's electronics, scintillators, and detectors shall be designed and built at multiple institutes in Europe and Asia. Final assembly will occur at the Centre Européen de Recherche Nucléaire (CERN) in Geneva.

The liftoff and landing configurations of AMS-02 are shown in Figures 1.0-1 through 1.0-4.

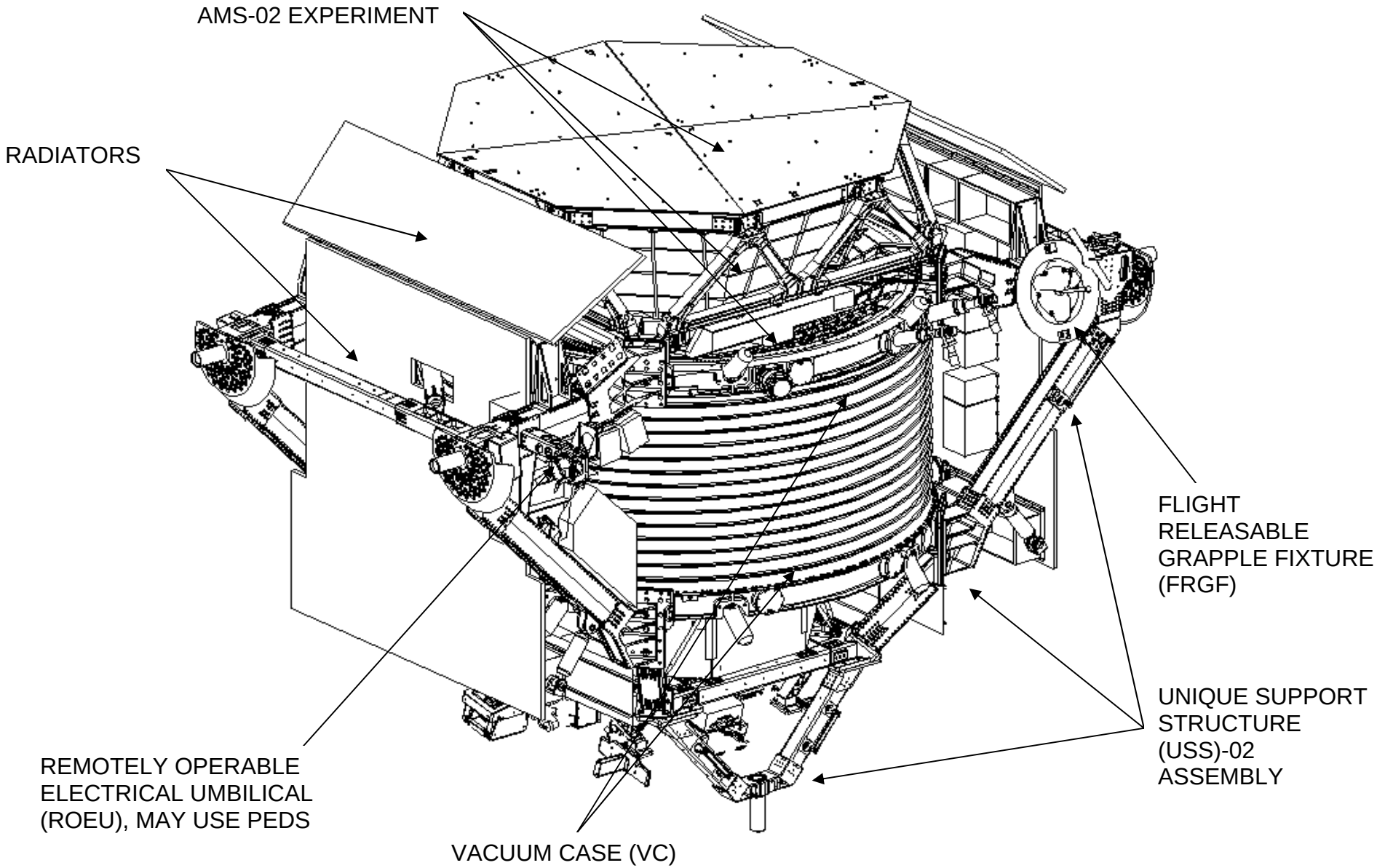

Figure 0.1-1: Alpha Magnetic Spectrometer – 02 Configuration - Launch, Landing, and On-Orbit

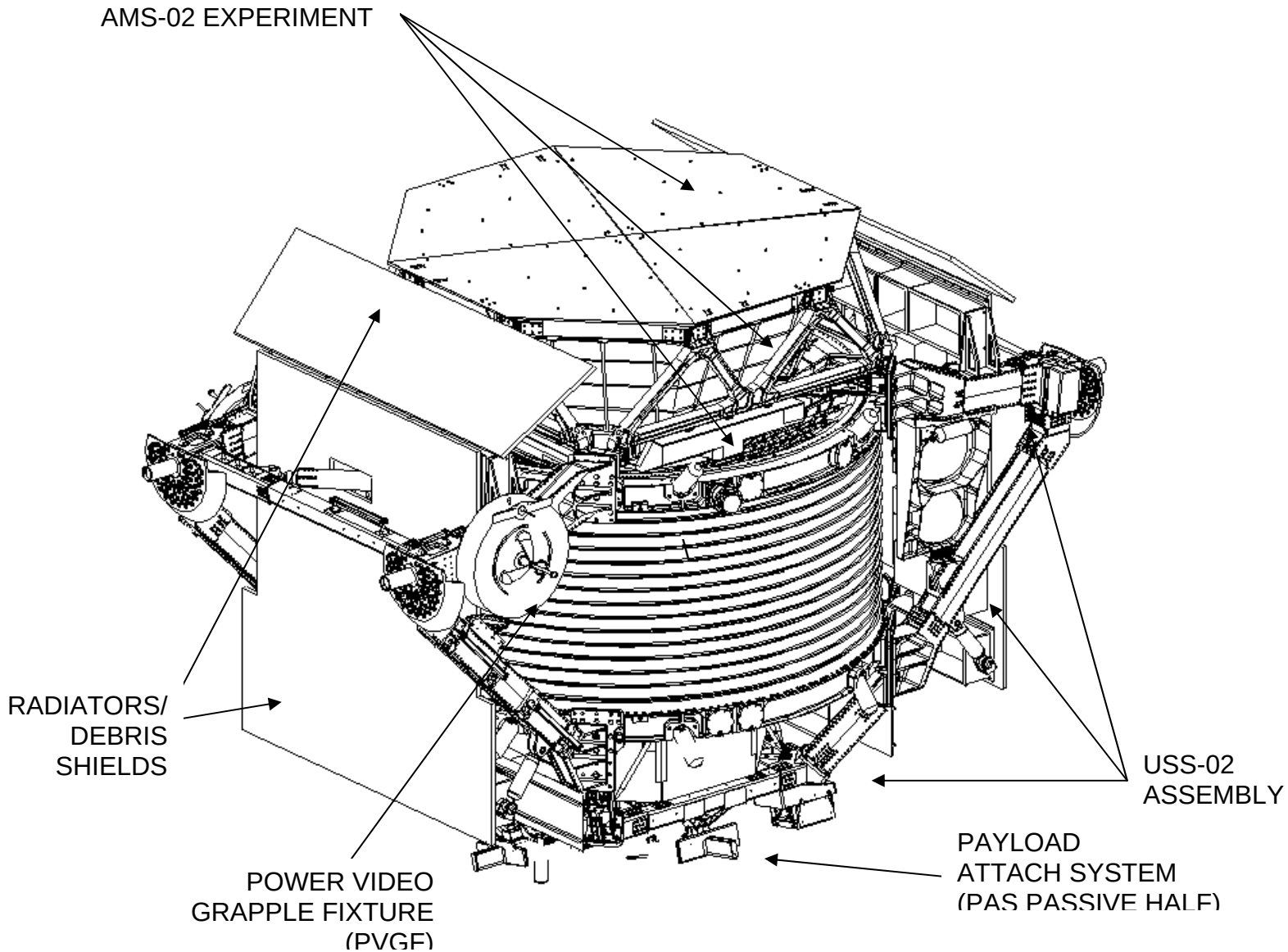

Figure 1.0-2: Alpha Magnetic Spectrometer – 02 Configuration - Launch, Landing, and On-Orbit

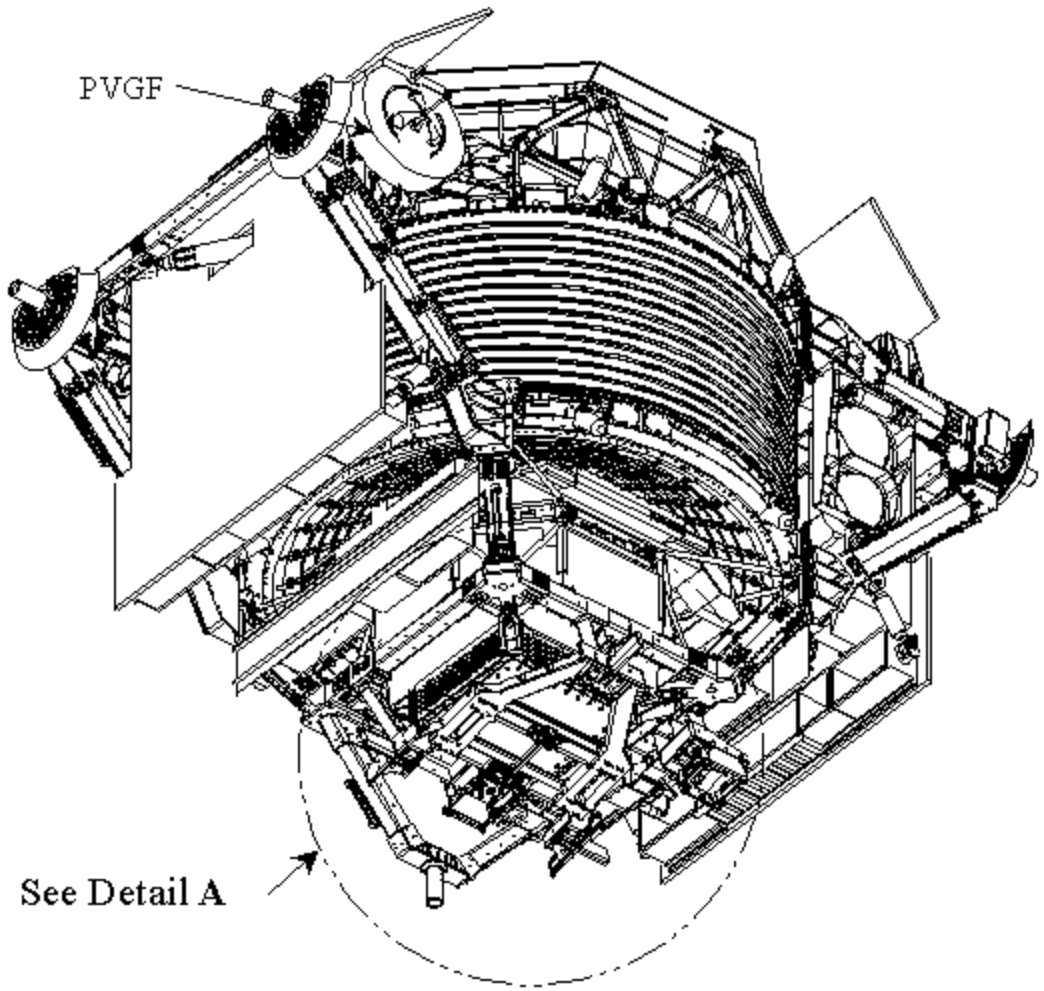

Figure 1.0-3: Alpha Magnetic Spectrometer – 02 Configuration - Launch, Landing, and On-Orbit

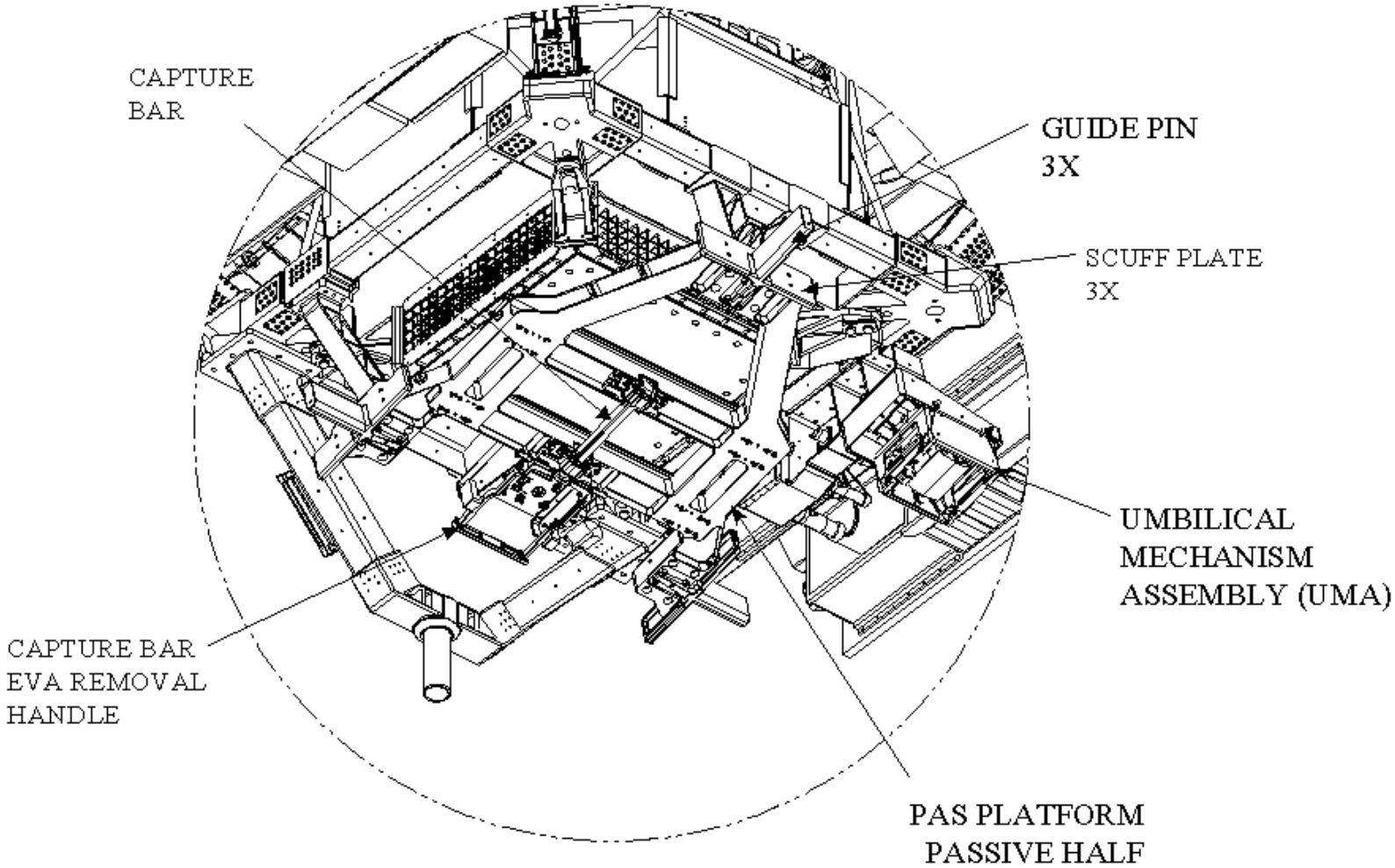

Figure 1.0-4: Alpha Magnetic Spectrometer – 02 Configuration Close-up of Payload Attach System (PAS)

The AMS-02 experiment consists of a large cryogenic superconducting magnet, cooled by superfluid helium and supported by the USS-02. The Cryomagnet Vacuum Case is constructed of Aluminum 2219 and Aluminum 7050-T7451. The toroidal Vacuum Case has a 2679.8-millimeter (mm) outer diameter, an 1115-mm inner diameter, an 858-mm Inner Cylinder height, and a 1464-mm Outer Cylinder height (Figure 4). The outer skin of the Cryomagnet Vacuum Case is a ring-stiffened cylinder made of Aluminum 7050-T7451. There are two large support rings on the top and bottom of the Outer Cylinder. These support rings are made of Aluminum 7050-T7451 and mate to the Conical Flanges and the Outer Cylinder through bolted/double O-ring interfaces. The Inner Cylinder is a monocoque design made of Aluminum 2219-T852. The top and bottom Conical Flanges will be made of one plate of Aluminum 2219-T62 that is spun and machined to their final rib-stiffened conical shape. The Conical Flanges and Inner Cylinder are welded together to make the final closeout structural weld.

Suspended inside the Cryomagnet Vacuum Case is the magnet, a large annular superfluid helium tank, and 200 layers of super-insulation and four vapor cooled shields. All of this ‘cold-mass’ is supported at eight locations that interface to the USS-02 using sixteen non-linear support straps. The use of the pre-tensioned non-linear composite straps is necessary in order to reduce the heat leak from the Cryomagnet Vacuum Case to the cold mass. Although linear straps do not present the same dynamic characteristics, the design approach, strap materials, arrangement, and assembly techniques are similar for non-linear straps.

Several secondary structural components are mounted to the outside of the Cryomagnet Vacuum Case. These components include the Tracker, the Anti-Coincidence Counter (ACC), and parts of the cryogenic pumps. The Tracker and ACC are very similar, if not identical to the STS-91 version of AMS.

The USS-02 primary members consist of extruded aluminum tubing with a minimum wall thickness of 0.25-inch made from 7075-T73511. Most USS-02 joints are made of 7050-T7451 6-inch thick plate and are machined. The USS-02 attaches to the Space Shuttle Orbiter with four (4) longeron trunnions and one (1) keel trunnion. The degrees of freedom at the Orbiter interface are X and Z for the two (2) primary longeron trunnions, Z for the two (2) stabilizer longeron trunnions, and Y for the keel trunnion. The STS interfaces will meet the requirements defined in NSTS-21000-IDD-ISS [15]. The AMS-02 payload attaches to the ISS via the Payload Attach System (PAS). The PAS hardware on the AMS-02 consists of three guide pins and a capture bar. The PAS design will meet the requirements defined in SSP-57003 [9] and SSP-57004 [10]. The design will be documented in SSP-57213, AMS-02 to ISS Hardware ICD [35].

Several secondary structural components are mounted to the USS-02. These components include the Electromagnetic Calorimeter (ECAL), the Transition Radiation Detector (TRD), the TRD gas supply system, the Ring Imaging Cherenkov Counter (RICH), various electronics crates, various components of the Thermal Control System (TCS), and the Meteoroid and Orbital Debris (MMOD) shields. Most of these systems have been added to the AMS-02 when compared to the STS-91 version.

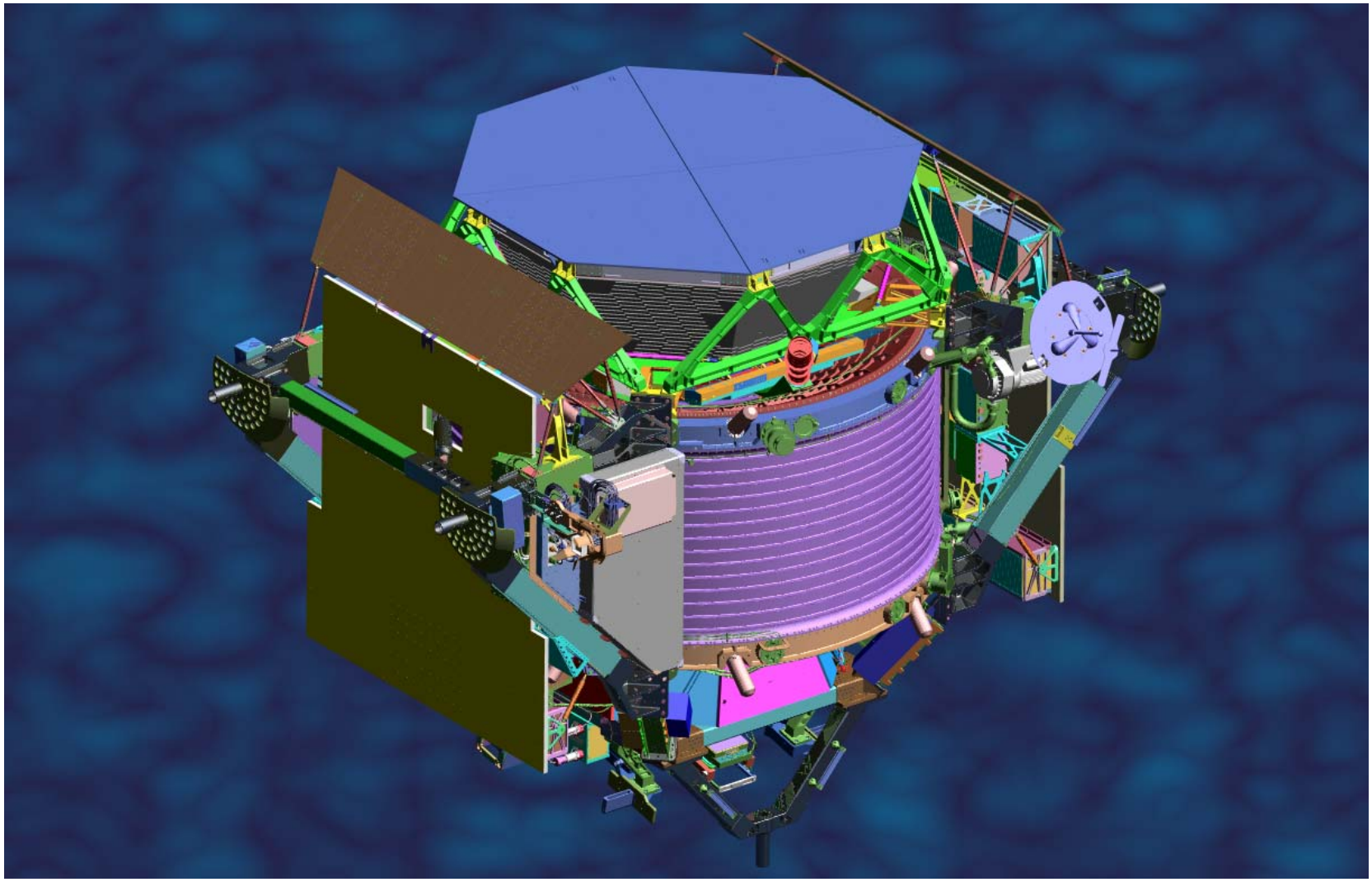

Figure 1.0-5: View of Alpha Magnetic Spectrometer – 02

Bottom View

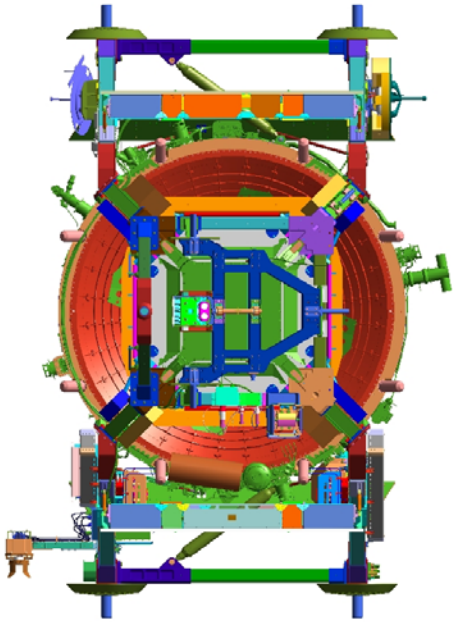

Top View

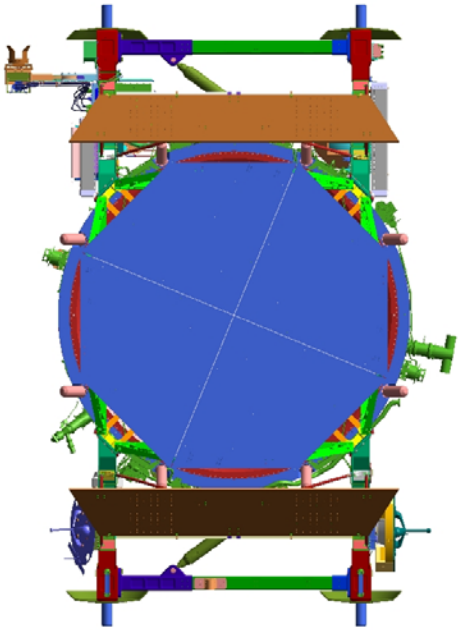

Figure 1.0-6: Bottom and Top View of Alpha Magnetic Spectrometer – 02

Back View

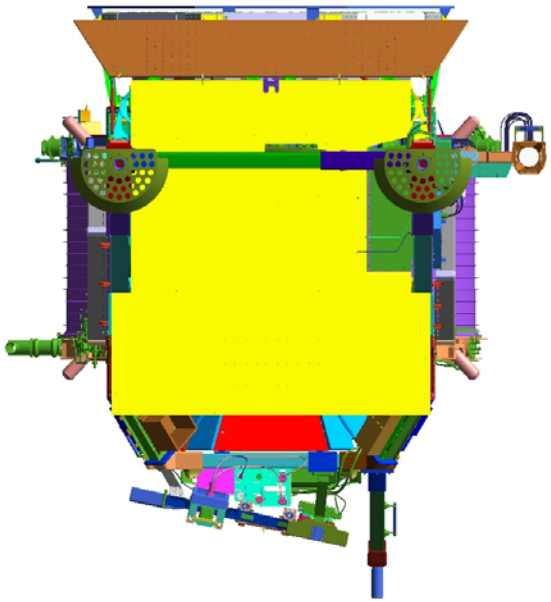

Front View

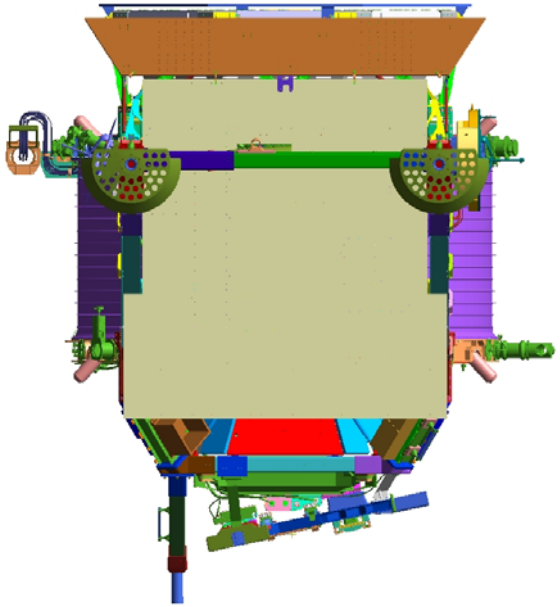

Figure 1.0-7: Back and Front View of Alpha Magnetic Spectrometer – 02

Left View

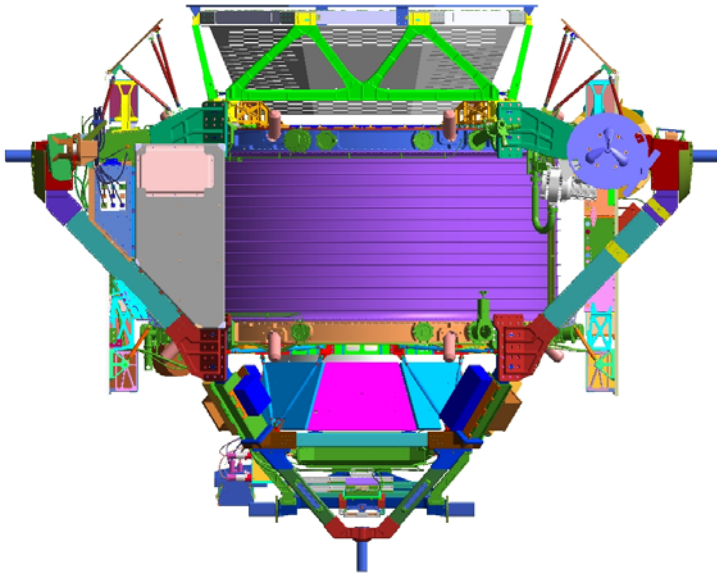

Right View

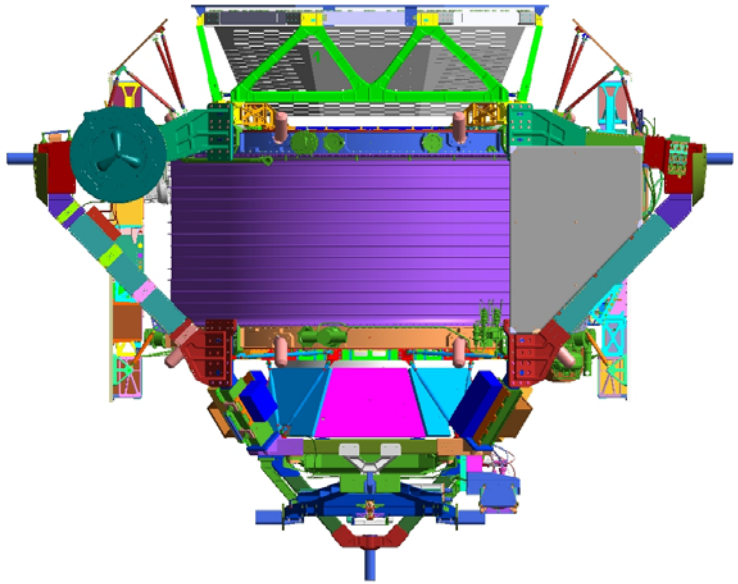

Figure 1.0-8: Left and Right View of Alpha Magnetic Spectrometer – 02

1.1 MODEL DESCRIPTION

This report documents the stress analysis for a subset of the AMS-02 components that includes the Unique Support Structure, the Vacuum Case, the Payload Attach System, and the payload integration hardware. These components were included in a finite element model of the full AMS-02 payload.

The finite element model of the AMS-02 payload was initially developed during the design phase of the payload. The math model was prepared for use with the NASA Structural Analysis (NASTRAN) computer program. Since the initial version of the math model, updates have been made to account for changes to the payload components and increase the model fidelity. The 2-06 version of the math model (released in February 2006) was used as the “loads model” for the stress analysis documented in this report.

The loads model represents the payload components with varying levels of modeling fidelity. The primary structure and the secondary components that have a significant effect on the overall payload response are modeled at a relatively high level of fidelity. Smaller components and items that do not have a significant effect on the global payload response are represented by concentrated mass elements and rigid elements.

For areas of the structure that are highly loaded or that have lower structural margins, a more detailed model of the component was typically used in a separate static analysis to produce the data required for the stress analysis. The responses from the loads model would then be used as the input force in this detailed stand-alone analysis of the component.

The payload components are all represented as linear, elastic structure with the exception of the cryogenic magnet support system. The magnet support system straps are modeled using tension-only elements with nonlinear, elastic stress-strain characteristics.

1.1.1 Unique Support Structure (USS) Component Model

The unique support structure model is comprised primarily of beam elements. The cross sectional properties for the elements were formulated in FEMAP using the CAD model for the individual beams. For locations where USS members intersect, the beam elements use the combined inner and outer most profiles to define the total cross section at that location. The main joints (i.e. the upper and lower vacuum case joints and the lower center body joints) are modeled with plate elements. The trunnion sill joints are modeled using RBE2 elements that connect all of the intersecting beam elements at that joint. The mass of the individual components is tuned to match the actual hardware by adjusting the mass density of that components material entry. Other USS components such as the fasteners and shims are represented by concentrated mass elements at each bolted connection. The mass of the rivets in the major joints is accounted for by adding non-structural mass entries to the beam elements at the riveted

joints. Electronic components that are relatively stiff compared to the USS beams are represented with concentrated mass elements.

1.1.2 Vacuum Case (VC) Component Model

The vacuum case component model consists primarily of plate elements. Beam elements with offsets are used to model the ribs of the conical flanges, the ribs of the outer cylinder, and portions of the support rings. Solid elements are used to model the interface plates. Fasteners joining the conical flanges to the support ring and the outer cylinder to the support ring are modeled with CBUSH elements which include stiffness for the axial and shear directions. Instead of representing all of the fasteners around the perimeter of the support rings with individual CBUSH elements, the combined stiffness of several adjacent fasteners is represented by a CBUSH with the equivalent stiffness for the group of fasteners.

Various experiment components are located on the perimeter of the support rings. This hardware has been represented with concentrated mass and rigid elements.

1.1.3 Payload Attach System (PAS) Component Model

The PAS hardware in the loads model is represented mostly by beam elements. Structure with more complex geometry is represented by plate elements. Concentrated mass elements are used to represent nonstructural components. The bolted joints are represented by CBUSH elements.

1.1.4 Shuttle and ISS Integration Hardware Component Models

The integration hardware generally consists of brackets with complex shapes, so plate elements are used for these components. Nonstructural items are represented by concentrated mass and rigid elements. Bolted joints are represented by CBUSH elements.

1.2 LOADING CONDITIONS

For the majority of the payload components documented in this report, the critical loading conditions occur during the liftoff or landing phase of the Shuttle flight. These components include the Unique Support Structure (USS), Vacuum Case (VC), and most of the STS and ISS integration hardware. The liftoff and landing loads were represented by load factors that are applied as inertial loads to the full payload math model in a nonlinear static analysis. The liftoff and landing load factors were obtained from a Design Coupled Loads Analysis which consisted of a nonlinear, dynamic analysis. These load factors are documented in “AMS-02 Structural Verification Plan for the Space Transportation System and International Space Station”, JSC-28792.

The nonlinear aspects of the payload require that loading conditions prior to liftoff and landing be accounted for. These preflight conditions include the following:

(1) mechanical preload for the support straps;
(2) loads due to differential pressure on the vacuum case (an internal vacuum and external atmospheric pressure);
(3) loads due to gravity;
(4) loads due large thermal gradients on the interior of the vacuum case; and
(5) preloads in the trunnions due to misalignment with the Orbiter payload retention latch assembly.

The loads due these preflight conditions are applied to the payload as preloads to the appropriate payload structure.

The Payload Attach System (PAS) was assessed for Shuttle liftoff and landing loads, but the most significant loading condition for the PAS is when the payload is berthed to the ISS and the Common Attach System (CAS) capture claw is fully engaged with the PAS capture bar. These onorbit loads were obtained from an analysis performed by Boeing as part of the International Space Station Design Analysis Cycle 8 (D684-10019-02-01-02 Rev E). The interface loads for AMS-02 are also documented in JSC-28792 and further described in Section 4.06 of this report.

The significant loading condition for the Flight Releasable Grapple Fixture (FRGF) and the Power Video Grapple Fixture (PVGF) occur during on-orbit operations when the payload is grappled by the Shuttle Remote Manipulator (SRMS) System or the Space Station Remote Manipulator System (SSRMS). These load are documented in JSC-28792.

The significant loading condition for the scuff plates is defined as an impact load using the payload mass and an impact velocity of 0.11 feet per second. This loading condition is documented in NSTS-21000-IDD-ISS.

All components that are within 24 inches of an EVA translation path or EVA worksite have been analyzed for crew kick loads in addition to any other applicable loading

conditions. EVA kick loads are defined as a quasi-static concentrated force applied over a 0.5 inch diameter circular area. The requirements for this loading condition are documented in Table 3.1.1.2.6-1 of SSP-57003.

1.3 FACTORS OF SAFETY

Various factors of safety will be used on different hardware depending on its intended use, level of complexity, and level of testing. The minimum primary and secondary structure factors of safety are detailed in Appendix A of the AMS-02 Structural Verification Plan, JSC-28792. All of the factors of safety shown in Appendix A of document JSC-28792 have been approved by the SWG and NASA/EM2 [26].

The minimum factors of safety (FS) for structural component design of the AMS-02 experiment and integration hardware for flight environments are also listed in Appendix A of document JSC-28792. If the component is not specifically mentioned in Appendix A of document JSC-28792, assume a factor of safety of 2.0 (ultimate) and 1.25 (yield) with no structural testing. For all joints that do not have the matched drilled or reamed holes, a fitting factor of 1.15 shall be used for all modes of failure associated with structural joints, including bolts and bearing surfaces.

The Unique Support Structure-02 and Vacuum Case are analyzed with an ultimate factor of safety of 1.4 and a yield factor of safety of 1.1 against limit loads. The Payload Attach System and Payload Integration Hardware are analyzed with an ultimate factor of safety of 2.0 and a yield factor of safety of 1.25 against limit loads.

For tested hardware, a factor of safety of 1.5 for ultimate and a factor of safety of 1.1 for yield were applied. These factors of safety were applied in the Vertex Bracket analysis.

In the fastener fail-safe analysis, an ultimate factor of safety of 1.0 was applied. A factor of safety of 1.0 is applied for joint separation.

1.4 MATERIALS AND TEMPERATURE

All material used are verified in accordance with applicable requirements in the AMS-02 SVP and in the *Safety Policy and Requirements Document for Payloads Using the International Space Station* (NSTS 1700.7, ISS Addendum).

Material Properties

Material properties of metallic materials meet those called out in the *Military Handbook: Metallic Materials and Elements for Aerospace Vehicle Structures* (MIL-HDBK-5, Revision H or J). Material properties were also obtained from Metallic Material Properties Development and Standardization (MMPDS-01 and 03).

Temperature Effects

The temperature specified in Appendix C2 shall be used for the structural analysis, and the material properties shall be degraded accordingly.

1.5 Fracture Assessment

A fatigue and fracture assessment was performed for the AMS-02 components that includes the Unique Support Structure, the Vacuum Case, the Payload Attach System, and the Payload Integration Hardware. For details of this assessment, refer to document ESCG-4450-08-STAN-DOC-0115, *Fatigue and Fracture Assessment of the Alpha Magnetic Spectrometer-02 (AMS-02) Unique Support Structure (USS-02), Vacuum Case, and Payload Attach System (PAS)* and document ESCG-4450-09-STAN-DOC-0032, *Fracture Control Summary of the Alpha Magnetic Spectrometer-02 (AMS-02).*

2.0 Strength and Stability Assessment for USS-02

2.1 Upper USS-02 Assembly

2.1.1 Upper Vacuum Case Interface Joint

Table 2.1.1-1 Minimum Margin of Safety Summary

Part / Dwg Number	Part Name / Description	Material & Heat Treatment	Critical Load Condition	Failure Mode	Margin of Safety	Reference Page	Comments
SDG39135727	Upper VC Joints	7050-T7451 Al. Aly.	Launch	Tension	0.035	2.1.1-10	

Notes: Factor of Safety is 1.4 for Ultimate and 1.1 for Yield

The Stress Analysis of the Upper VC Joints

1. Introduction of the Upper VC Joints

Four Upper VC Joints are used to connect the USS-02 to the four locations of the Upper Support Ring, which is one component of the Vacuum Case. The pictures of Figure 2.1.1-1 show how the Upper VC Joints interface with the Vacuum Case and USS-02. One side of the Upper VC Joint is connected to the Upper Trunnion Bridge Beam. Other side of the Upper VC Joint is connected to the Interface Plate and the TRD Corner Brackets.

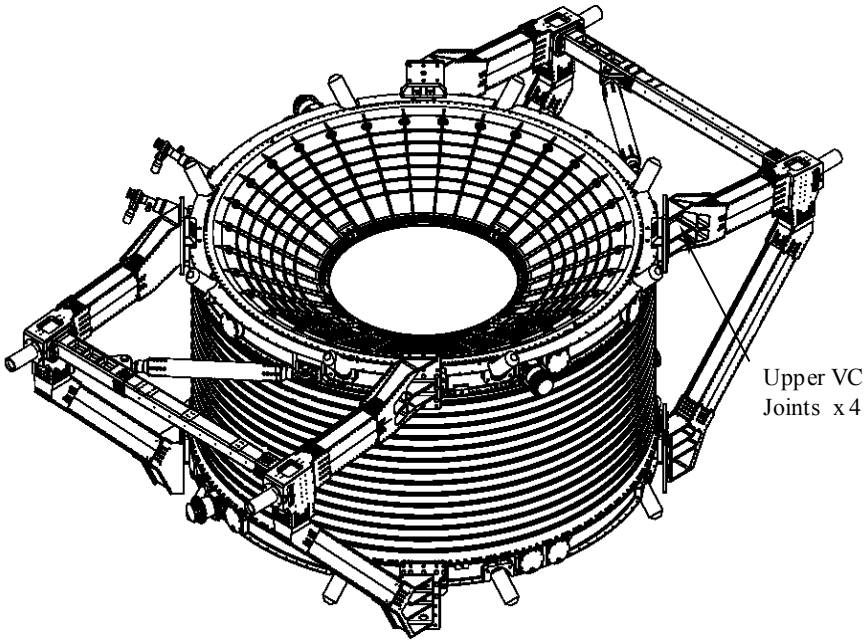

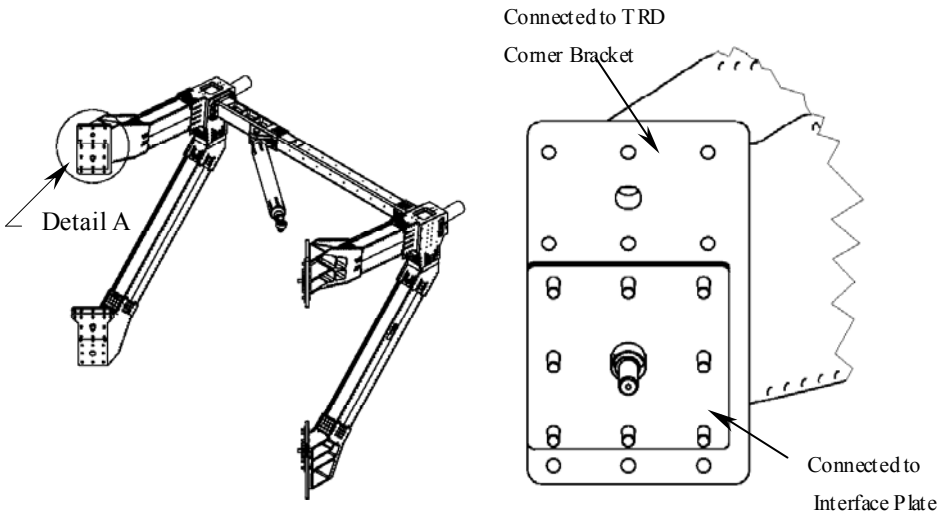

Figure 2.1.1-1 Upper VC Joints With Vacuum Case and USS-02

The pictures of Figure 2.1.1-2 show that one of the Upper VC Joints interfaces with the TRDGAS Assembly. The TRDGAS Assembly has two interface connections with the USS-02 structure. One is the upper USS interface bolting the Box_S Support Structure to the upper trunnion bridge and upper VC joint. The lower USS interface consists of a triangular aluminum bracket on which a helicoidal stainless steel spring is attached.

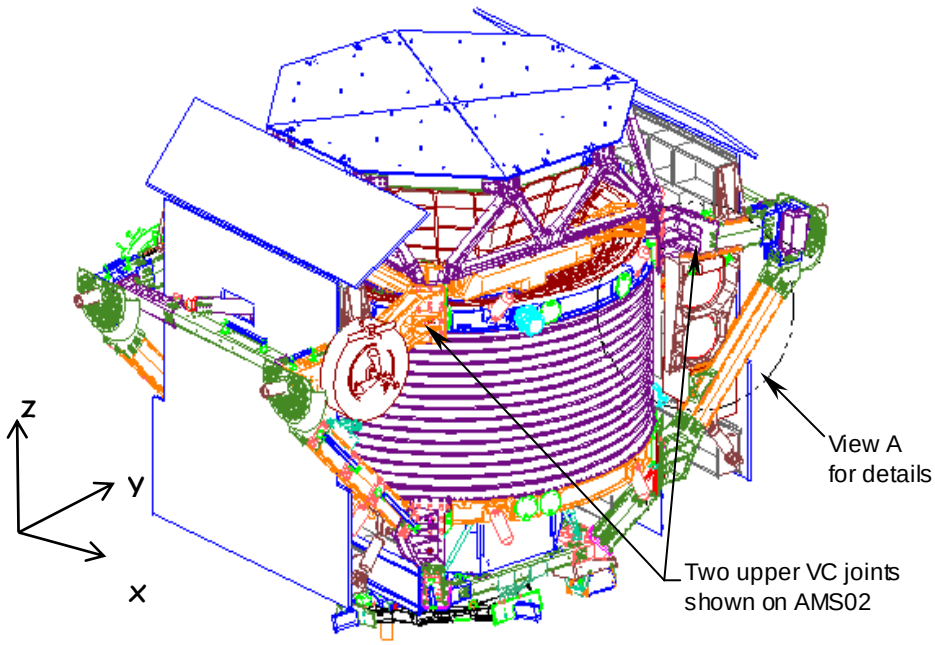

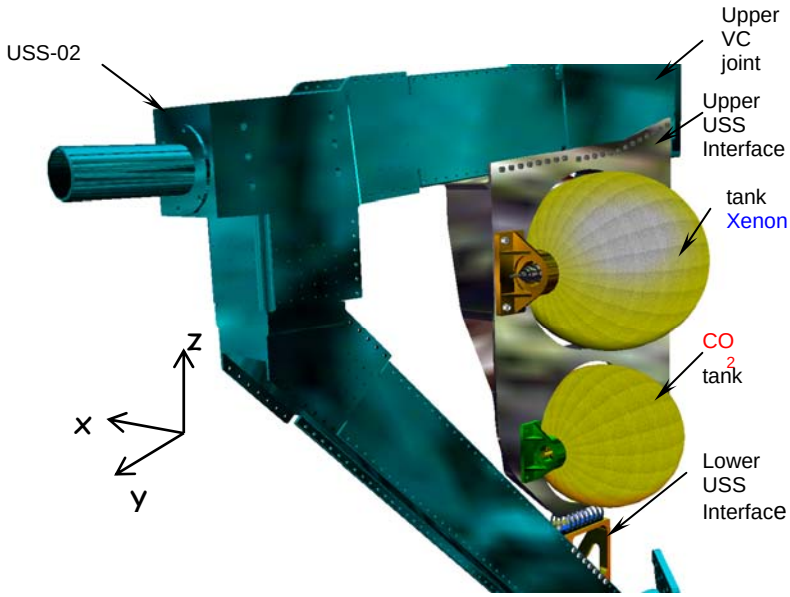

View A Details of TRDGAS System Box-S

Figure 2.1.1-2 Upper VC Joint and TRDGAS Assembly

The Upper VC Joint is machined from 7050-T7451 plate as a single piece. The details of the Upper VC Joint is shown in Figure 2.1.1-3. Rivets are used to connect the Upper VC Joints and Upper Trunnion Bridge Beams. Bolts are used to connect the Upper VC Joint with the Interface Plates and the Corner Bracket of the TRD Assembly.

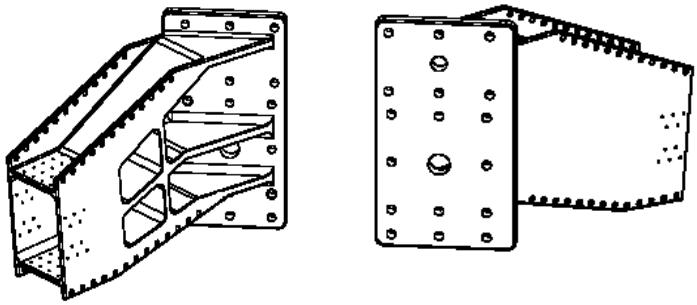

Figure 2.1.1-3 Details of the Upper VC Joint

2. Method used to Perform the Stress Analysis of the Upper VC Joints

The FEA math models of the Upper VC Joints were made using FEMAP software. The FEA model of the Upper VC Joint consists of the plate elements (CQUAD4 and CTRIA3) and solid elements (CHEXA and CPENTA). The picture of Figure 2.1.1-4 below is showing the FEA models of the Upper VC Joints are embedded into the USS-02 FEA model.

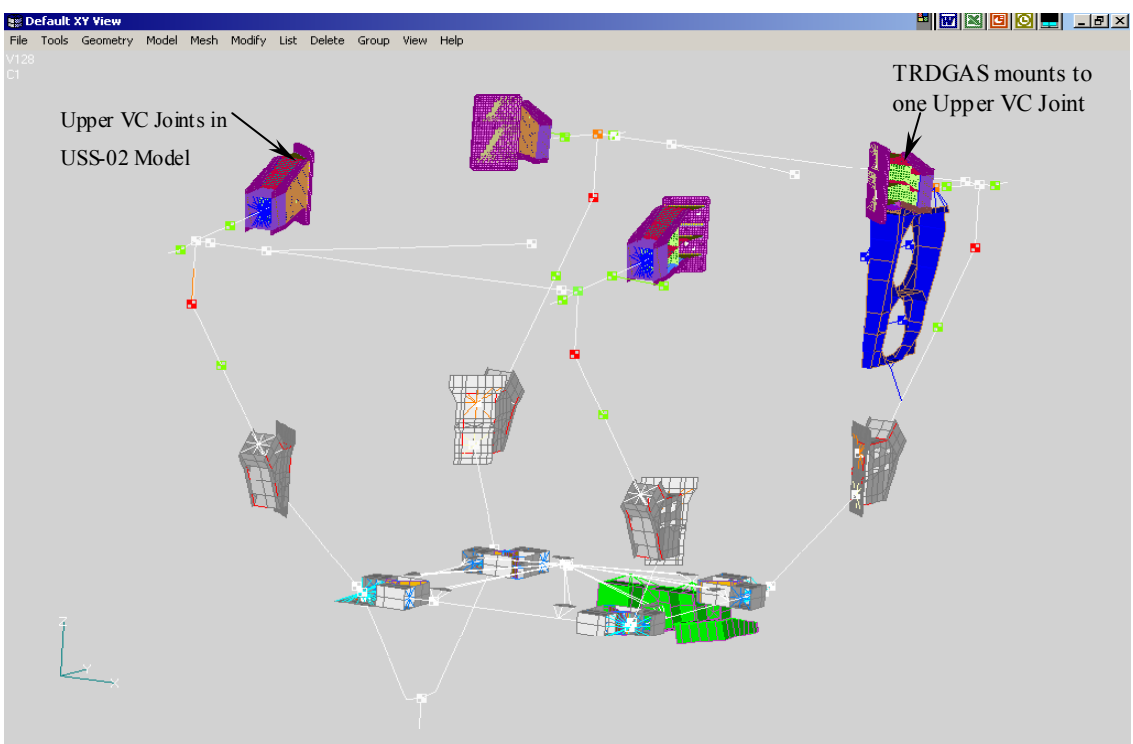

Figure 2.1.1-4 Upper VC Joint models embedded into the USS-02 model

After completion, the models of the Upper VC Joints were integrated with the USS-02 FEA model. The rivet connections between the Upper VC Joints and Upper Trunnion Bridge Beams are modeled using rigid elements (RBE2). The bolt connections between the Upper VC Joints and either the Interface Plates or the TRD Corner Brackets are using rigid elements and CBUSH elements.

The TRDGAS FEA model was also embedded into the USS-02 FEA model. The connections Between the TRDGAS and Upper VC Joint were modeled using Rigid Elements (RBE2) and CBUSH Elements. The connections from TRDGAS model to the Upper and Lower Trunnion Bridge Beams were modeled using rigid elements (RBE2). Figure 2.1.1-5 is showing the details of the FEA model between the Upper VC Joint model and TRDGAS.

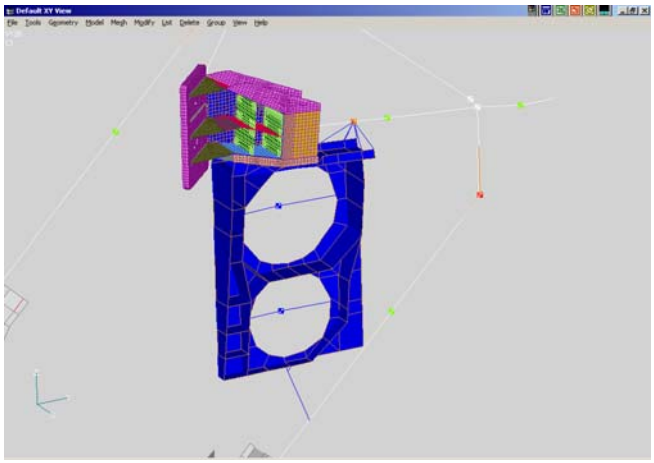

Figure 2.1.1-5 TRDGAS model connected to the Upper VC Joint model

3. FEA models of the Upper VC Joints and Assumptions

When the FEA models of the Upper VC Joints are put into the USS-02 FEA model, we assume the USS02 FEA math model is correct. All the boundary conditions including the constraints and loading cases are also modeled correctly. The stress analysis only focuses on the FEA models of the Upper VC Joints.

The NASTRAN data file of the Upper VC Joint models is put under the directory: /hsm/swang/ams02/uppermodel-newel, and named as "uss-upper403.nas"

4. FEA model check of the Upper VC Joint Models

The model check was performed before embedding the Upper VC Joint models into the USS-02 FEA model. The results of the model check were including the four FEA models of the Upper VC Joints. The results are listed below.

O U T P U T F R O M G R I D P O I N T W E I G H T G E N E R A T O R

MASS AXIS SYSTEM (S)	MASS	X-C.G.	Y-C.G.	Z-C.G.
X	3.900795E-01	-8.355689E-18	1.120670E-15	-7.592238E-05
Y	3.900795E-01	-4.013955E-14	3.821729E-19	-7.592238E-05
Z	3.900795E-01	1.517351E-14	5.607796E-15	-4.473160E-19

```
                I(S)
  *  8.359843E+02  1.726397E-13  1.198922E-14 *
  *  1.726397E-13  6.077592E+02  4.662970E-15 *
  *  1.198922E-14  4.662970E-15  1.431934E+03 *

                I(Q)
  *  8.359843E+02                            *
  *              6.077592E+02                *
  *                          1.431934E+03    *

                Q
  *  1.000000E+00  0.000000E+00  0.000000E+00 *
  *  0.000000E+00  1.000000E+00  0.000000E+00 *
  *  0.000000E+00  0.000000E+00  1.000000E+00 *
```

STIFFNESS MATRIX **KGG** (6 X 6)

2.9790D-08	-3.0401D-07	-9.6990D-09	-5.6947D-06	4.9090D-06	-9.3070D-06
-2.4704D-07	***2.9889D-07***	1.7542D-08	5.1111D-06	6.8309D-06	-4.5575D-07
-2.6553D-08	1.8288D-08	***-4.6001D-08***	-5.3270D-07	-6.7842D-06	1.2011D-06
-6.7275D-06	4.9613D-06	-3.0100D-06	***4.6130D-04***	-3.0601D-04	-1.9023D-05
3.1480D-06	7.9183D-06	-7.4836D-06	5.3853D-05	***2.4789D-04***	5.2515D-06
-9.3853D-07	-7.2684D-07	6.7527D-07	-8.4703D-06	-1.2783D-05	***1.8258D-03***

STIFFNESS MATRIX **KNN** (6 X 6)

2.5817D-06	-2.5419D-06	-9.2638D-09	-6.2746D-06	8.0027D-06	-3.2705D-06
-1.2287D-06	***1.6137D-06***	4.1913D-08	-2.9971D-08	2.9199D-06	-8.1395D-06
1.7211D-09	2.1156D-08	***-1.2131D-07***	1.6211D-05	-5.4169D-06	2.1370D-06
1.0145D-06	1.5269D-05	1.7247D-06	***-2.8296D-04***	5.5353D-04	4.4215D-05
-3.6503D-06	6.0443D-06	8.0750D-05	7.2558D-04	***-1.5430D-03***	5.1354D-05
8.8053D-06	4.3271D-06	1.1676D-06	-5.6183D-05	-2.3531D-05	***1.1692D-03***

.

STIFFNESS MATRIX **KAA** (6 X 6)

2.5817D-06	-2.5419D-06	-9.2638D-09	-6.2746D-06	8.0027D-06	-3.2705D-06
-1.2287D-06	***1.6137D-06***	4.1913D-08	-2.9971D-08	2.9199D-06	-8.1395D-06
1.7211D-09	2.1156D-08	***-1.2131D-07***	1.6211D-05	-5.4169D-06	2.1370D-06
1.0145D-06	1.5269D-05	1.7247D-06	***-2.8296D-04***	5.5353D-04	4.4215D-05
-3.6503D-06	6.0443D-06	8.0750D-05	7.2558D-04	***-1.5430D-03***	5.1354D-05
8.8053D-06	4.3271D-06	1.1676D-06	-5.6183D-05	-2.3531D-05	***1.1692D-03***

R E A L E I G E N V A L U E S

MODE NO.	EXTRACTION ORDER	EIGENVALUE	RADIANS	CYCLES	GENERALIZED MASS	GENERALIZED STIFFNESS
1	1	-3.178526E-05	5.637842E-03	8.972904E-04	1.000000E+00	-3.178526E-05
2	2	-2.049523E-05	4.527166E-03	7.205207E-04	1.000000E+00	-2.049523E-05
3	3	-1.254220E-05	3.541497E-03	5.636468E-04	1.000000E+00	-1.254220E-05
4	4	-1.098740E-05	3.314725E-03	5.275549E-04	1.000000E+00	-1.098740E-05
5	5	-6.307500E-06	2.511474E-03	3.997135E-04	1.000000E+00	-6.307500E-06
6	6	-1.504228E-06	1.226470E-03	1.951987E-04	1.000000E+00	-1.504228E-06
7	7	-1.204369E-06	1.097438E-03	1.746626E-04	1.000000E+00	-1.204369E-06
8	8	-7.266390E-07	8.524312E-04	1.356686E-04	1.000000E+00	-7.266390E-07
9	9	-5.419115E-07	7.361464E-04	1.171613E-04	1.000000E+00	-5.419115E-07
10	10	9.879459E-07	9.939547E-04	1.581928E-04	1.000000E+00	9.879459E-07
11	11	1.417477E-06	1.190578E-03	1.894864E-04	1.000000E+00	1.417477E-06
12	12	1.422575E-06	1.192718E-03	1.898269E-04	1.000000E+00	1.422575E-06
13	13	2.432524E-06	1.559655E-03	2.482268E-04	1.000000E+00	2.432524E-06
14	14	2.503450E-06	1.582229E-03	2.518196E-04	1.000000E+00	2.503450E-06
15	15	3.726182E-06	1.930332E-03	3.072219E-04	1.000000E+00	3.726182E-06
16	16	4.086505E-06	2.021511E-03	3.217334E-04	1.000000E+00	4.086505E-06
17	17	5.299135E-06	2.301985E-03	3.663723E-04	1.000000E+00	5.299135E-06
18	18	6.568866E-06	2.562980E-03	4.079109E-04	1.000000E+00	6.568866E-06
19	19	7.269671E-06	2.696233E-03	4.291188E-04	1.000000E+00	7.269671E-06
20	20	8.721050E-06	2.953142E-03	4.700072E-04	1.000000E+00	8.721050E-06
21	21	1.098589E-05	3.314497E-03	5.275185E-04	1.000000E+00	1.098589E-05
22	22	1.320027E-05	3.633217E-03	5.782444E-04	1.000000E+00	1.320027E-05
23	23	2.330583E-05	4.827611E-03	7.683382E-04	1.000000E+00	2.330583E-05
24	24	5.049433E-05	7.105936E-03	***1.130945E-03***	1.000000E+00	5.049433E-05
25	25	4.025298E+07	6.344523E+03	***1.009762E+03***	1.000000E+00	4.025298E+07

First twenty-four rigid body modes are listed here since the four FEA models of the Upper VC Joints were put together to run the model check.

The results of the model check show that the FEA models of the Upper VC Joints are correct because the underlined translation values of each matrix are close to zero. The first twenty-four modes are also close to zero and transition modes are well separated.

The NASTRAN data file used for the model check is put under the directory: /hsm/swang/ams02/checkmodel/ckupperussjoint, and named as "uss-upper203-2.f06"

5. Loads and Constraints

The entire AMS-02 FEA model is constrained at the five Trunnion locations after the FEA models of the Upper VC Joints are connected with the USS-02 FEA models using RBE's and CBUSH elements.

A number of load cases under the launch, landing and thermal conditions were investigated in order to identify the worst load cases. The NASTRAN data files of the load cases are within the directories below. The Load Factors of the load cases are applied at the C.G. of the entire AMS02 FEA model when running NASTRAN. The combined Load Factors are taken from Table 4.1 of Page 17 in AMS02 Structural Verification Plan for STS and ISS (JSC-28792, Rev.C).

In the directory: /hsm/swang/ams02/nonlin/upperjoint/1000, the data files are for launch condition named from R1001.dat to R1064.dat.

In the directory: /hsm/swang/ams02/nonlin/upperjoint/2000, the data files are for landing condition named from R2001.dat to R2064.dat.

In the directory: /hsm/swang/ams02/nonlin/upperjoint/4000, the data files are for thermal condition named from R4001.dat to R4064.dat.

6. Maximum Stresses and Calculation for the Margins of Safety

The maximum stresses of the elements and the relative worst load cases are listed in Table 2.1.1-2. The maximum stresses were sorted out from the pch data files of the load cases using the NASPOST. The sorted-out data files for the load cases are attached in Appendix A11. The f06 files of the load cases are used to perform the post-processing of the FEA models of the Upper VC Joints. The f06 and pch files of NASTRAN for the FEA models of the Lower Center Body Assembly are put under directory below.

/hsm/swang/ams02/nonlin/upperjoint/1000/3-03, and on April, 2003.
/hsm/swang/ams02/nonlin/upperjoint/2000/3-03, and on April, 2003.
/hsm/swang/ams02/nonlin/upperjoint/4000/3-03, and on April, 2003.

Table 2.1.1-2 Max. stresses of the Upper VC Joints

Element ID	Element Type	Load Case	Max-PRIN (Top)	Von-MISES (Top)	Max-shear (Top)	Max-PRIN (Bot)	Von-MISES (Bot)	Max-Shear (Bot)
5113635	QUAD4	1049	**43810.74**	39373.56	21905.37	17338.28	20956.73	11644.19
5443007	QUAD4	2020	26072.30	26995.53	13916.30	43216.23	43158.28	21608.12
5114281	QUAD4	1016	0.00	41522.42	21810.66	15213.01	14230.36	7606.51
5104077	QUAD4	2020	32111.92	29678.45	16055.96	673.02	**43882.30**	**22107.47**
5114281	QUAD4	1016	-43621.32	41522.42	21810.66	0.00	14230.36	7606.51
5104077	QUAD4	2020	0.00	29678.45	16055.96	-43541.91	43882.30	22107.47

Based on Table 2.1.1-2, the following maximum stresses will be used to perform the margin calculation of the stress analysis for the Upper VC Joints.

σt:=43810.74 psi (max. tensile at R1049, Ele 5113635, Max-prin on Page 2.1.1-16)
σy:=43882.3 psi (max. yield at R2020, Ele 5104077, Von-MISES on Page 2.1.1-17)
σs:=22107.47 psi (max. shear at R2020, Ele 5104077, Von-MISES on Page 2.1.1-18)

Upper VC Joints (thickness = 6 - 7 inches), 7050-T7451 Al. Aly. (AMS 4050)

$Ftu := 69000 \cdot psi$	ultimate tensile strength	$FSy := 1.1$	yield Factor of Safety
$Fty := 59000 \cdot psi$	tensile yield strength	$FSu := 1.4$	ultimate Factor of Safety
$Fsu := 44000 \cdot psi$	shear strength		
$\eta ult := 0.92$	(ultimate thermal factor at 140 F)		
$\eta yld := 0.98$	(uield thermal factor at 140 F)		

Margins of Safety

Ultimate	$MSu := \frac{\eta ult \cdot Ftu}{\sigma t \cdot FSu} - 1$	$MSu = 0.035$	#
Yield	$MSy := \frac{\eta yld \cdot Fty}{\sigma y \cdot FSy} - 1$	$MSy = 0.198$	#
Shear	$MSs := \frac{\eta ult \cdot Fsu}{\tau s \cdot FSu} - 1$	$MSs = 0.308$	#

7. Locations of the Maximum Stresses in the Upper VC Joints

a. Locations of the Elements with the Maximum Stresses

The Figure 1.2.1.15-6 below shows the FEA models of the Upper VC Joints isolated from the USS-02 FEA models. The locations of the elements with high stresses are also indicated in Figure 2.1.1-6.

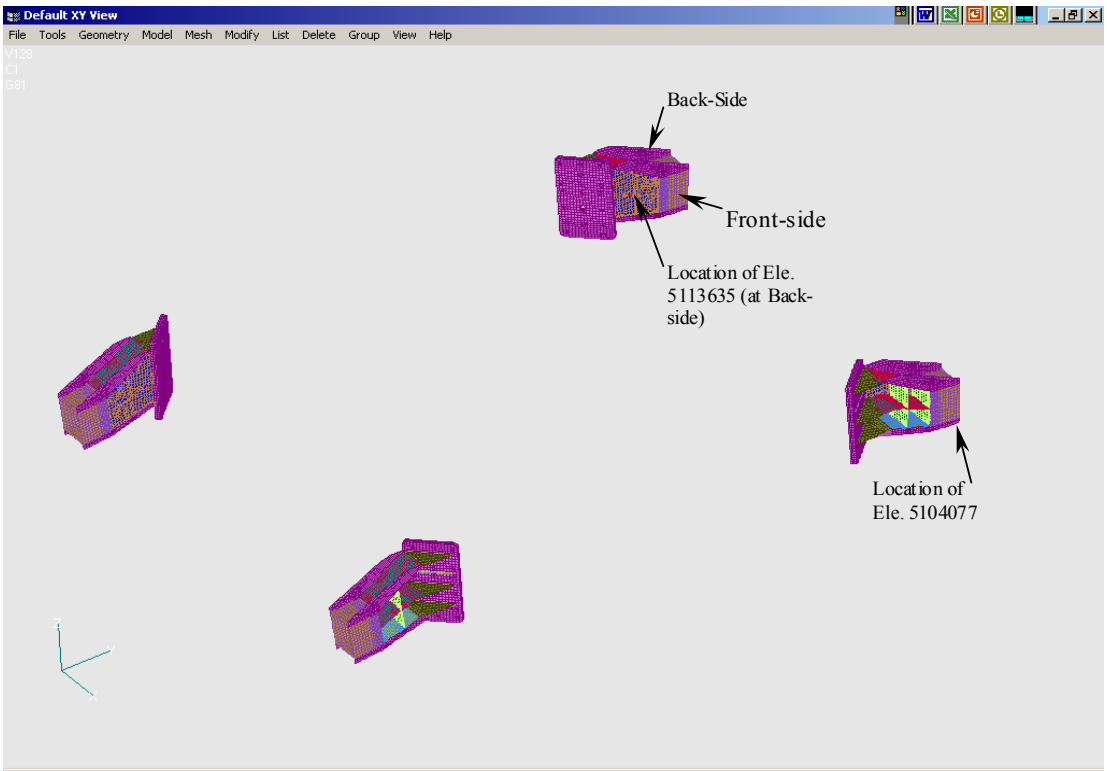

Figure 2.1.1-6 Locations of the Elements with the Max. Stresses

b. Locations of the Maximum Stresses

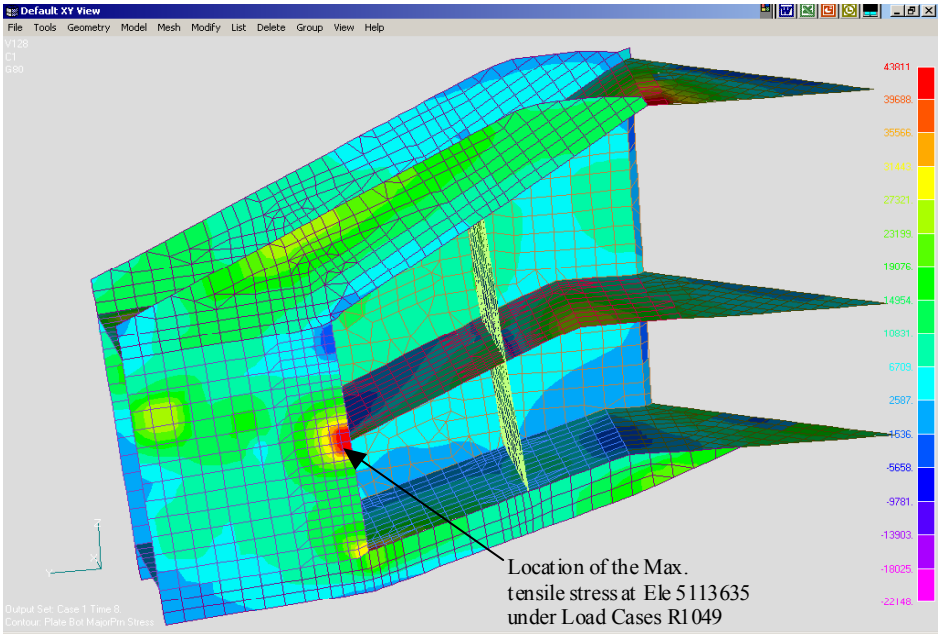

Figure 2.1.1-7a. Location of the Max. Tensile Stress on the Plate Element

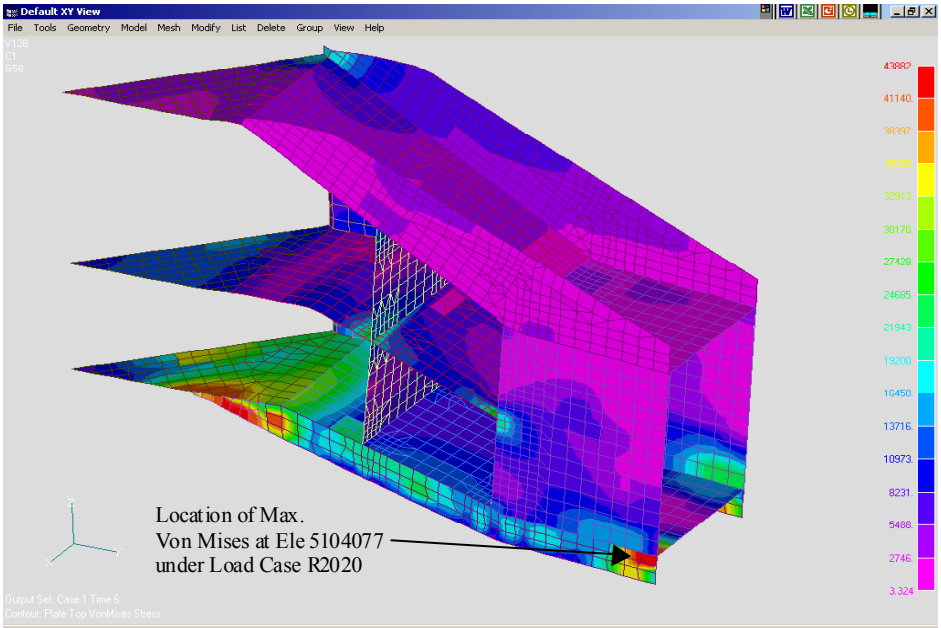

Figure 2.1.1-7b Location of the Max. Yield Stress on the Plate Element

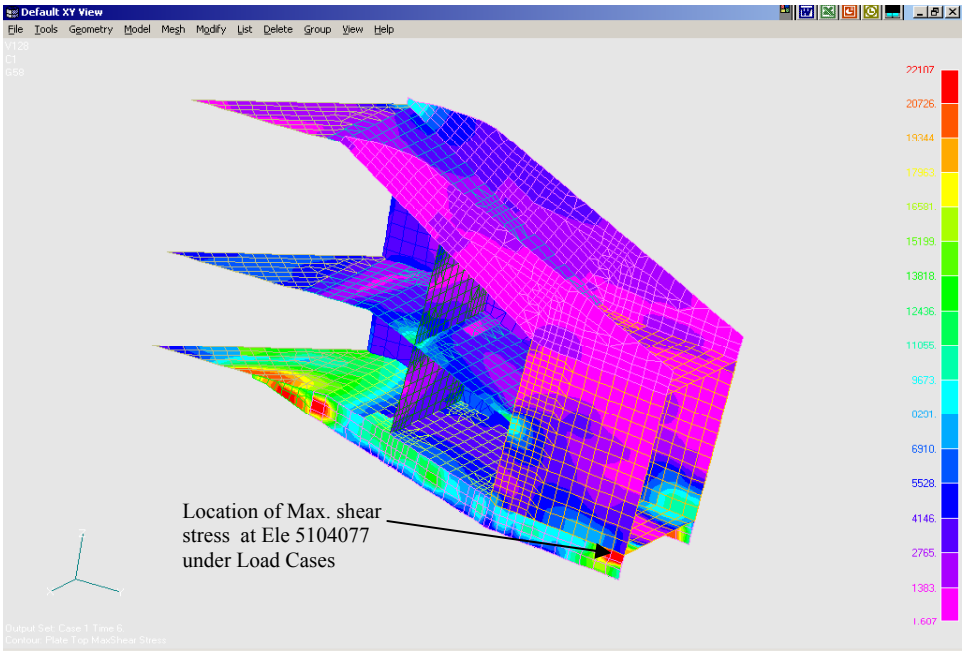

Figure 2.1.1-7c. Location of the Max. Shear Stress on the Plate Element

2.1.2 Upper Trunnion Bridge Beam Assembly

Upper Trunnion Bridge Beam Analysis

Buckling Analysis:

Since part is a slender beam with compressive loads, buckling is critical.

In Finite Element Model of USS-02 version 2-04 shown in Figure 2.1.2-1, Upper Trunnion Bridge Beam includes Element Ids of 1101-1103, 1104-1106, 1107-1109, and1110-1112. These elements have a Property Id of 1002.

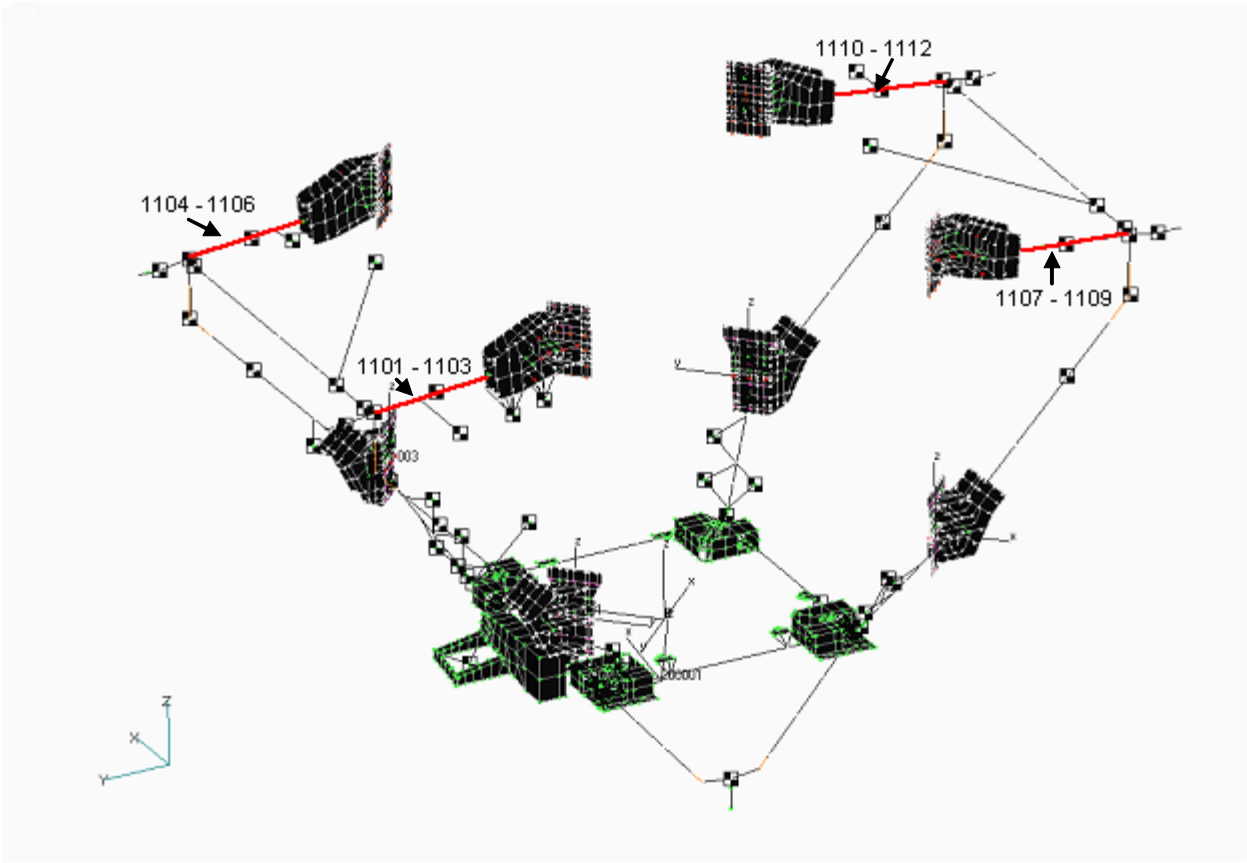

Figure 2.1.2-1: Upper Trunnion Bridge Beam shown in 2-04 Loads Model

Prepared By	Name	Date		File Name
	Brent Dyer	02/15/06		UTBB-bklg.mcd
Checked By	C. Bala		**Engineering and Science Contract Group** *Structural Analysis Section*	Drawing No. SDG39135728
Title	USS-02 Upper Trunnion Bridge Beam			

Factor of Safety, ultimate $FSu := 1.4$

Factor of Safety, yield $FSy := 1.1$

Material: AL 7075-T73511

(Ref. MIL-HDBK-5J, Table 3.7.6.0(g_2), Thickness: 0.250-0.499)

Compressive modulus, $Ec := 10700000 \cdot psi$

Ultimate tensile strength, $ftu := 68000 \cdot psi$

Tensile yield strength, $fty := 57000 \cdot psi$

Compression yield strength, $fcy := 60000 \cdot psi$

Ultimate shear strength, $fsu := 38000 \cdot psi$

Temp. correction factor, ult & yield:
(Ref. MIL-HDBK-5J, fig.3.7.6.1.1(c) & (d), fig.3.7.6.1.4, and Appendix C2)

Maximum Temperature occurs during abort landing

$Tmax := 150 \cdot deg$

Temperature correction factor, ultimate: $ctu := 0.94$

Temperature correction factor, yield: $cty := .96$

Temperature correction factor, Ec: $cec := .98$

Section: 5.062" x 6.312" x 0.3125" Tube *(Ref. Dwg# SDG39135728)*

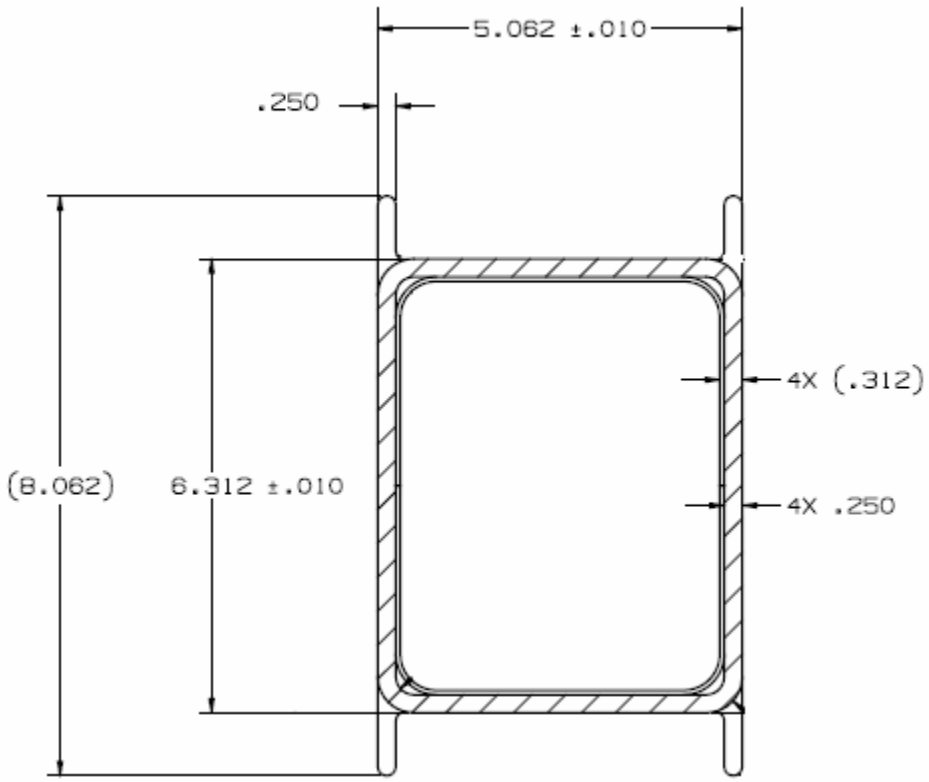

Shape Factor, $f := 1.22$ *(Ref. Structural Engineering Handbook, 4th Edition, Table 7, p.11-15)*

Supported length, $L := 16.99 \cdot in$

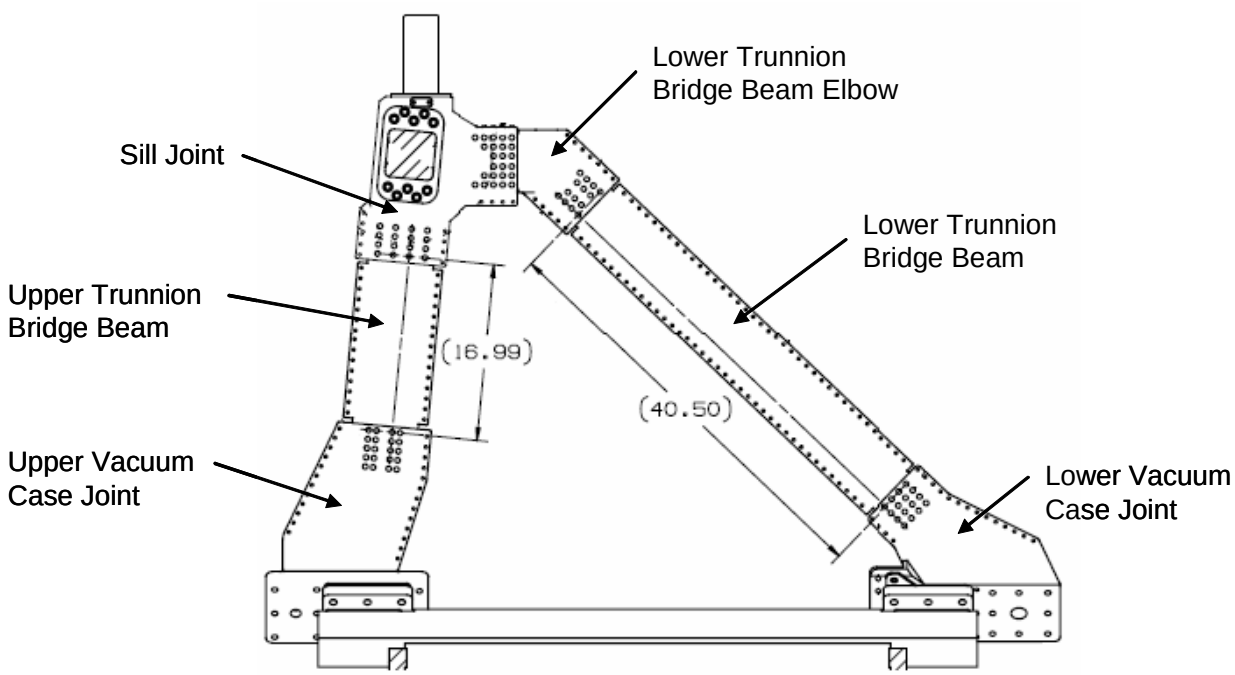

Width, $Dy := 5.062 \cdot in$

For torsional calculation, use: $Dytor := 5.062 \cdot in$

Depth, $Dz := 6.312 \cdot in$

For torsional calculation, use: $Dztor := 6.312 \cdot in$

Thickness, $t := 0.3125 \cdot in$

Define: $b := 2 \cdot t$

Properties of cross-section: *(Ref. Table 2.1.2-1)*

Area, $A := 6.718 \cdot in^2$

Moment of Inertia, $Iy := 38.074 \cdot in^4$

$Iz := 26.829 \cdot in^4$

First moments, $Qy := 7.272 \cdot in^3$

$Qz := 6.222 \cdot in^3$

Table 2.1.2-1a: Property about Y-Y axis

Portion	b	d	Area, A	z	Az	Az^2	Icy	Iy'
1	5.0620	0.3125	1.5819	6.1558	9.7376	59.9424	0.0129	59.9553
2	0.3125	5.6870	1.7772	3.1560	5.6088	17.7014	4.7898	22.4912
3	5.0620	0.3125	1.5819	0.1563	0.2472	0.0386	0.0129	0.0515
4	0.3125	5.6870	1.7772	3.1560	5.6088	17.7014	4.7898	22.4912
Sum		**A=**	**6.718**		21.2024			104.9892
		z_bar=	**3.156**					
		Iyy=	**38.074**					

Table 2.1.2-1b: Property about Z-Z axis

Portion	b	d	Area, A	y	Ay	Ay^2	Icz	Iz'
1	0.3125	5.0620	1.5819	2.5310	4.0037	10.1334	3.3778	13.5112
2	5.6870	0.3125	1.7772	4.9058	8.7184	42.7705	0.0145	42.7849
3	0.3125	5.0620	1.5819	2.5310	4.0037	10.1334	3.3778	13.5112
4	5.6870	0.3125	1.7772	0.1563	0.2777	0.0434	0.0145	0.0579
Sum		**A=**	**6.718**		17.0036			69.8653
		y_bar=	**2.531**					
		Izz=	**26.829**					

Table 2.1.2-1c: First Moment about Y-Y axis

Portion	b	d	Area, A	z	Qyy
1	5.0620	0.3125	1.581875	2.9998	4.7452
2	0.3125	2.8435	0.88859375	1.4218	1.2634
4	0.3125	2.8435	0.88859375	1.4218	1.2634
Sum				**Qyy=**	**7.272**

Table 2.1.2-1d: First Moment about Z-Z axis

Portion	b	d	Area, A	y	Qzz
1	0.3125	2.5310	0.7909375	1.2655	1.0009
2	5.6870	0.3125	1.7771875	2.3748	4.2204
3	0.3125	2.5310	0.7909375	1.2655	1.0009
Sum				**Qzz=**	**6.222**

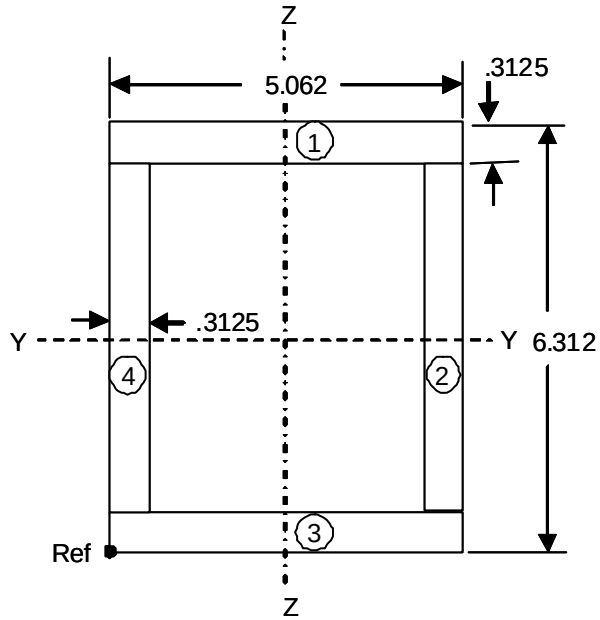

Section modulus, $Sy := \dfrac{Iy}{\frac{1}{2}\cdot Dz}$ $\quad Sy = 12.1\,in^3$

$Sz := \dfrac{Iz}{\frac{1}{2}\cdot Dy}$ $\quad Sz = 10.6\,in^3$

Torsional constant / distance, $JoR := 2\cdot t\cdot(Dztor - t)\cdot(Dytor - t)$ $\quad JoR = 17.8\,in^3$

Radii of gyration, $ry := \sqrt{\dfrac{Iy}{A}}$ $\quad ry = 2.4\,in$

$rz := \sqrt{\dfrac{Iz}{A}}$ $\quad rz = 2\,in$

Fixity coefficient, $K := 1.2$ *(Ref. Structural Engineering Handbook, 4th Edition, Figure 5, p.8-10)*
(One end fixed, one end free in translation)

Slenderness ratios, $SRy := \dfrac{K\cdot L}{ry}$ $\quad SRy = 8.6$

$SRz := \dfrac{K\cdot L}{rz}$ $\quad SRz = 10.2$

Constants depending upon the mechanical properties of the material from Ref. Structural Engineering Handbook, 4th Edition, Formulas 5a-c, p.11-6 :

$$Bc := fcy\cdot cty\cdot\left[1 + \left(\frac{fcy\cdot cty}{2250000\cdot psi}\right)^{\frac{1}{2}}\right] \qquad Bc = 66816\,psi$$

$$Dc := \frac{Bc}{10}\cdot\left(\frac{Bc}{Ec\cdot cec}\right)^{\frac{1}{2}} \qquad Dc = 533\,psi$$

$$Cc := 0.41\cdot\frac{2\cdot Bc}{3\cdot Dc} \qquad Cc = 34.2$$

Compression allowables:

$$Fcy := \begin{cases} Bc - Dc \cdot SRy & \text{if } SRy \le Cc \\ Ec \cdot cec \cdot \left(\frac{\pi}{SRy}\right)^2 & \text{otherwise} \end{cases} \qquad Fcy = 62248\,psi$$

$$Fcz := \begin{cases} Bc - Dc \cdot SRz & \text{if } SRz \le Cc \\ Ec \cdot cec \cdot \left(\frac{\pi}{SRz}\right)^2 & \text{otherwise} \end{cases} \qquad Fcz = 61375\,psi$$

Ref. Structural Engineering Handbook, 4th Edition, p.11-25 , defines:

(Note: FSu is used below for moment magnification due to eccentricities.)

$$Fey := \frac{102000000 \cdot psi}{FSu \cdot SRy^2} \qquad Fey = 993371\,psi$$

$$Fez := \frac{102000000 \cdot psi}{FSu \cdot SRz^2} \qquad Fez = 699983\,psi$$

Ultimate shear allowables:

$$Vulty := fsu \cdot ctu \cdot \frac{Iz \cdot b}{Qz} \qquad Vulty = 96264\,lbf$$

$$Vultz := fsu \cdot ctu \cdot \frac{Iy \cdot b}{Qy} \qquad Vultz = 116887\,lbf$$

Ultimate torsion allowable:

$$Tult := fsu \cdot ctu \cdot JoR \qquad Tult = 636143\,in \cdot lbf$$

Axial tensile allowable:

$$Pt := ftu \cdot ctu \cdot A \qquad Pt = 429415\,lbf$$

Axial compression allowable:

$$Pcr := \begin{cases} Fcz \cdot A & \text{if } Fcy \ge Fcz \\ Fcy \cdot A & \text{otherwise} \end{cases} \qquad Pcr = 412315\,lbf$$

Ultimate bending allowables:

$$Multy := Sy \cdot [ftu \cdot ctu + (f - 1) \cdot fty \cdot cty] \qquad Multy = 916363\,in \cdot lbf$$

$$Multz := Sz \cdot [ftu \cdot ctu + (f - 1) \cdot fty \cdot cty] \qquad Multz = 805171\,in \cdot lbf$$

Combined bending and axial allowables:

$$Pey := Fey \cdot A \qquad Pey = 6673465\,lbf$$

$$Pez := Fez \cdot A \qquad Pez = 4702484\,lbf$$

Input for NASPOST was taken from 192 punch files in three different folders:

/hsm/bsommer/ams/nonlin/1000/2-04
/hsm/bsommer/ams/nonlin/2000/2-04
/hsm/bsommer/ams/nonlin/4000/2-04

MathCAD will read in all the load data from "utbb.txt" for the calculations below.

$load := READPRN("utbb.txt")$ $\qquad i := 1 .. rows(load)$

Element ID: $ID := load^{\langle 1 \rangle}$ $\qquad$ Load case number: $LC := load^{\langle 2 \rangle}$

+ At end A of beam element:

Moment: $M1a := load^{\langle 3 \rangle} \cdot in \cdot lbf$ $\qquad M2a := load^{\langle 4 \rangle} \cdot in \cdot lbf$

Shear force: $V1a := load^{\langle 5 \rangle} \cdot lbf$ $\qquad V2a := load^{\langle 6 \rangle} \cdot lbf$

Axial force: $Pa := load^{\langle 7 \rangle} \cdot lbf$

Total torque: $Toa := load^{\langle 8 \rangle} \cdot in \cdot lbf$

Warp torque: $Warpa := load^{\langle 9 \rangle} \cdot in \cdot lbf$

+ At end B of beam element:

Moment: $M1b := load^{\langle 10 \rangle} \cdot in \cdot lbf$ $\qquad M2b := load^{\langle 11 \rangle} \cdot in \cdot lbf$

Shear force: $V1b := load^{\langle 12 \rangle} \cdot lbf$ $\qquad V2b := load^{\langle 13 \rangle} \cdot lbf$

Axial force: $Pb := load^{\langle 14 \rangle} \cdot lbf$

Total torque: $Tob := load^{\langle 15 \rangle} \cdot in \cdot lbf$

Warp torque: $Warpb := load^{\langle 16 \rangle} \cdot in \cdot lbf$

Modify end torque by subtracting warping torque:

$$Ta_i := \left|Toa_i\right| - \left|Warpa_i\right|$$

$$Tb_i := \left|Tob_i\right| - \left|Warpb_i\right|$$

Shear ratios:

$$RSa_i := \frac{\left|V1a_i\right|}{Vulty} + \frac{\left|V2a_i\right|}{Vultz} + \frac{Ta_i}{Tult}$$

$$RSb_i := \frac{\left|V1b_i\right|}{Vulty} + \frac{\left|V2b_i\right|}{Vultz} + \frac{Tb_i}{Tult}$$

Tensile ratio at end A:

$$RTa_i := \begin{cases} \dfrac{\left|Pa_i\right|}{Pt} + \dfrac{\left|M2a_i\right|}{Multy} + \dfrac{\left|M1a_i\right|}{Multz} & \text{if } Pa_i \ge 0\cdot lbf \\ \dfrac{\left|Pa_i\right|}{Pcr} + \dfrac{\left|M2a_i\right|}{Multy}\cdot\dfrac{1}{1-\dfrac{\left|Pa_i\right|}{Pey}} + \dfrac{\left|M1a_i\right|}{Multz}\cdot\dfrac{1}{1-\dfrac{\left|Pa_i\right|}{Pez}} & \text{otherwise} \end{cases}$$

Tensile ratio at end B:

$$RTb_i := \begin{cases} \dfrac{\left|Pb_i\right|}{Pt} + \dfrac{\left|M2b_i\right|}{Multy} + \dfrac{\left|M1b_i\right|}{Multz} & \text{if } Pb_i \ge 0\cdot lbf \\ \dfrac{\left|Pb_i\right|}{Pcr} + \dfrac{\left|M2b_i\right|}{Multy}\cdot\dfrac{1}{1-\dfrac{\left|Pb_i\right|}{Pey}} + \dfrac{\left|M1b_i\right|}{Multz}\cdot\dfrac{1}{1-\dfrac{\left|Pb_i\right|}{Pez}} & \text{otherwise} \end{cases}$$

Combined Ratios:

$$RATIOa_i := \sqrt{\left(RTa_i\right)^2 + \left(RSa_i\right)^2}$$

$$RATIOb_i := \sqrt{\left(RTb_i\right)^2 + \left(RSb_i\right)^2}$$

$$RATIO_i := \text{if}\left(RATIOa_i \ge RATIOb_i, RATIOa_i, RATIOb_i\right)$$

Margin of Safety:

$$MS_i := \frac{1}{RATIO_i\cdot FSu} - 1$$

$\min(MS) = 1.64$

Reference - Buckling Margin of Safety

The worst load case that yielded minimum margin of safety is shown below:

$output := augment(ID, LC, MS)$ $\qquad$ $sorted := csort(output, 3)$

$$\left(sorted^T\right)^{\langle 1 \rangle^T} = (1103 \quad 4016 \quad 1.64)$$

Based upon the output of SORT function above, it reads:

Element ID = 1103

Load ID = 4016

MS = 1.64

Beam and Socket Analysis: Sill Joint Side

The following loop stacks element IDs 1101, 1104, 1109, and 1112 so that the data can be used only on the Sill Joint side of the beam element. The loop below takes the original data from the "loads" database and pulls out only the data for element IDs 1101, 1104, 1109, and 1112. This includes loads and moments from beam end A and B, although only end A loads and moments are used for the beam and socket analysis.

$rows(load) = 2304$ $\qquad$ $cols(load) = 16$

$$sillside := \left| \begin{array}{l} k \leftarrow 0 \\ \text{for } i \in 1..rows(load) \\ \quad \text{if } load_{i,1} = 1101 \vee load_{i,1} = 1104 \vee load_{i,1} = 1109 \vee load_{i,1} = 1112 \\ \quad\quad \left| \begin{array}{l} k \leftarrow k + 1 \\ newdata^{\langle k \rangle} \leftarrow \left(load^T\right)^{\langle i \rangle} \end{array} \right. \\ newdata^T \end{array} \right.$$

Beam and Socket Analysis: Sill Joint Side (Moment about Y)

Treating the connection as a Beam in a Socket, as per SMM, Memo 41a

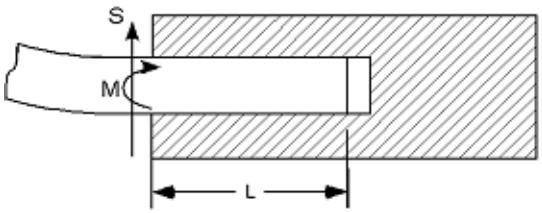

S and M are respectively beam shear in lbf and moment in in-lbf at end of socket. W is unit loading in lbf/in.

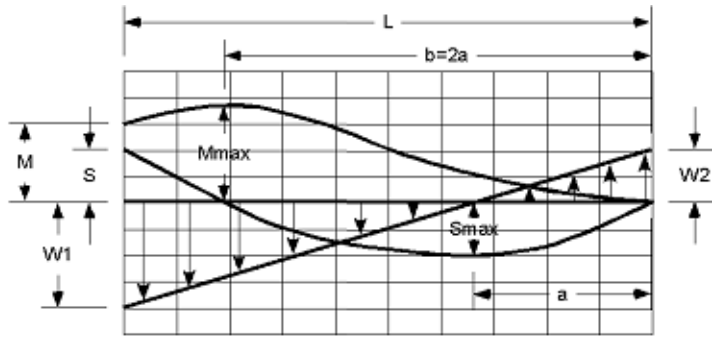

$i := 1 .. \text{rows}(\text{sillside})$ $\quad$ $\text{rows}(\text{sillside}) = 768$

$ID1_i := \text{sillside}_{i,1}$ Element ID

$LC1_i := \text{sillside}_{i,2}$ Load case number

$S1a_i := \text{sillside}_{i,5} \cdot \text{lbf}$ $\quad$ $S2a_i := \text{sillside}_{i,6} \cdot \text{lbf}$ Picking End A Shear from data

$S_i := \sqrt{\left(S1a_i\right)^2 + \left(S2a_i\right)^2}$ Combined End A Shear

$P_i := \text{sillside}_{i,7} \cdot \text{lbf}$ Picking End A Tension from data $\quad$ $M_i := \text{sillside}_{i,4} \cdot \text{in} \cdot \text{lbf}$ Picking Y Moment from data

$L_i := 4.981 \cdot \text{in}$ Length of beam inside socket

$$\text{mls_ratio}_i := \text{if}\left(S_i = 0, 1000, \frac{M_i}{S_i \cdot L_i}\right) \qquad \text{slm_ratio}_i := \text{if}\left(M_i = 0, 1000, S_i \cdot \frac{L_i}{M_i}\right)$$

Calculated values are then:

$$w1_i := \begin{cases} \dfrac{K1_i \cdot M_i}{(L_i)^2} & \text{if } |slm_ratio_i| \le 1 \\ \dfrac{K1_i \cdot S_i}{L_i} & \text{otherwise} \end{cases} \qquad w2_i := \begin{cases} \dfrac{K2_i \cdot M_i}{(L_i)^2} & \text{if } |slm_ratio_i| \le 1 \\ \dfrac{K2_i \cdot S_i}{L_i} & \text{otherwise} \end{cases}$$

$$a_i := Ka_i \cdot L_i$$

Max. shear

$$Smax_i := \begin{cases} \dfrac{(-Ks)_i \cdot M_i}{L_i} & \text{if } |slm_ratio_i| \le 1 \\ -K2_i \cdot S_i & \text{otherwise} \end{cases}$$

Max. Bending moment

$$Mmax_i := \begin{cases} Km_i \cdot M_i & \text{if } |slm_ratio_i| \le 1 \\ Km_i \cdot S_i \cdot L_i & \text{otherwise} \end{cases}$$

Now check:

$$Sc_i := \frac{w1_i - w2_i}{2} \cdot L_i$$

$$Mc_i := \frac{(-w1)_i + 2 \cdot w2_i}{6} \cdot (L_i)^2$$

Percent error:

$$S_percentdiff_i := \frac{S_i - Sc_i}{S_i}$$

$$M_percentdiff_i := \frac{M_i - Mc_i}{M_i}$$

To view graph with a specific load case, assign j a value $j := 61$

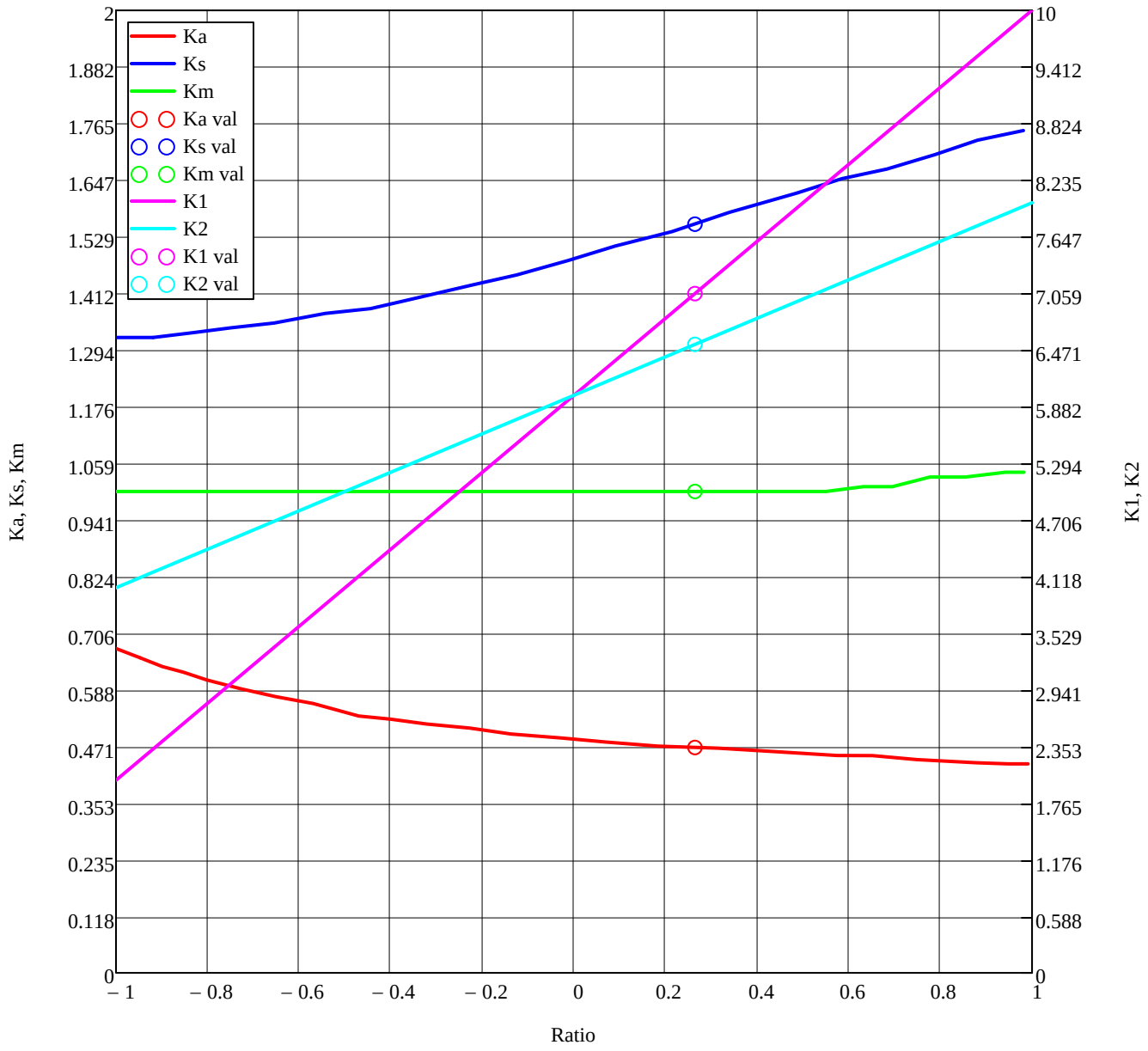

Beam and Socket Coefficients
Note if abs(SL/M) <= 1, Ratio = SL/M, otherwise Ratio = M/SL.

For this specific load case,

$S_j = 2978\,\text{lbf}$

$M_j = 56189\,\text{in}\cdot\text{lbf}$

Max Shear: $Smax_j = -17547\,\text{lbf}$ Shear Check: $Sc_j = 2978.4\,\text{lbf}$

Max moment: $Mmax_j = 56193\,\text{in}\cdot\text{lbf}$ Moment Check: $M_j = 56189\,\text{in}\cdot\text{lbf}$

With percent error $S_percentdiff_j = -0\,\%$

$M_percentdiff_j = 0\,\%$

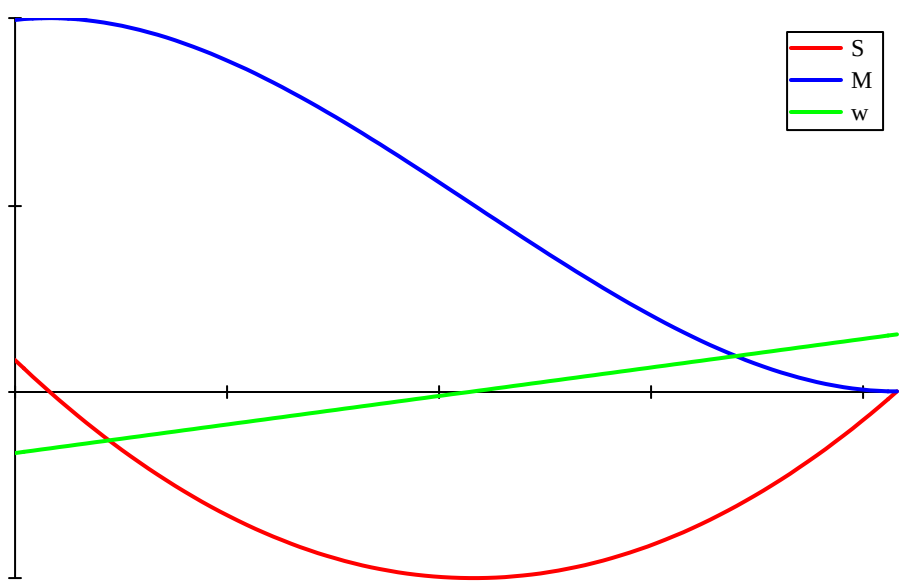

Actual Shear and Moment Distribution Inside Socket

Stresses

Total moment

Bending Tensile stress $\sigma_i := \frac{Mmax_i}{Sy}$ $\max(\sigma) = 6988.3\ psi$

Shear stress $\tau soc_i := \frac{|Smax_i|}{A}$ $\max(\tau soc) = 3932.5\ psi$

Axial tension stress $\sigma a_i := \frac{P_i}{A}$ $\max(\sigma a) = 5306.49\ psi$

Stress Ratios

Axial (ult) $Ra := \frac{\sigma a \cdot FSu}{ftu \cdot ctu}$

Bending (ult) $Rb := \frac{FSu \cdot \sigma}{ftu \cdot ctu}$

Shear (ult) $Rs := \frac{FSu \cdot \tau soc}{fsu \cdot ctu}$

Axial (yld) $Ray := \frac{\sigma a \cdot FSy}{fty \cdot cty}$

Bending (yld) $Rby := \frac{FSy \cdot \sigma}{fty \cdot cty}$

Shear(yld) $Rsy := \frac{FSy \cdot \tau soc}{fty \cdot cty}$

Margins of safety

Margin of safety ultimate $MS1u := \frac{1}{\sqrt{(Ra + Rb)^2 + Rs^2}} - 1$ $\min(MS1u) = 2.27$

Margin of safety yield $MS1y := \frac{1}{\sqrt{(Ray + Rby)^2 + Rsy^2}} - 1$ $\min(MS1y) = 2.85$

Reference - Beam and Socket Margin of Safety - Sill Joint Side - Moment Y

See below for the ultimate minimum margin of safety with element and load case information:

$output1 := augment(ID1, LC1, MS1u)$ $\quad$ $sorted := csort(output1, 3)$

$$\left(sorted^T\right)^{\langle 1 \rangle^T} = (1112 \quad 4058 \quad 2.27)$$

Based upon the output of SORT function above, it reads:

Element ID = 1112

Load ID = 4058

MS1u = 2.27

$$match(min(MS1u), MS1u) = (744)$$

See below for the yield minimum margin of safety with element and load case information:

$output1 := augment(ID1, LC1, MS1y)$ $\quad$ $sorted := csort(output1, 3)$

$$\left(sorted^T\right)^{\langle 1 \rangle^T} = (1112 \quad 4058 \quad 2.85)$$

Based upon the output of SORT function above, it reads:

Element ID = 1112

Load ID = 4058

MS1y = 2.85

Beam and Socket Analysis: Sill Joint Side (Moment about Z)

Treating the connection as a Beam in a Socket, as per SMM, Memo 41a

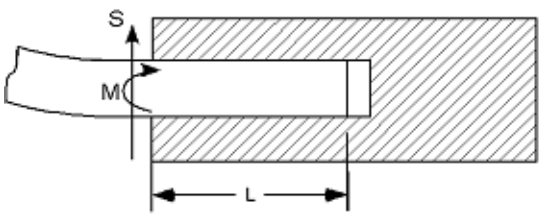

S and M are respectively beam shear in lbf and moment in in-lbf at end of socket. W is unit loading in lbf/in.

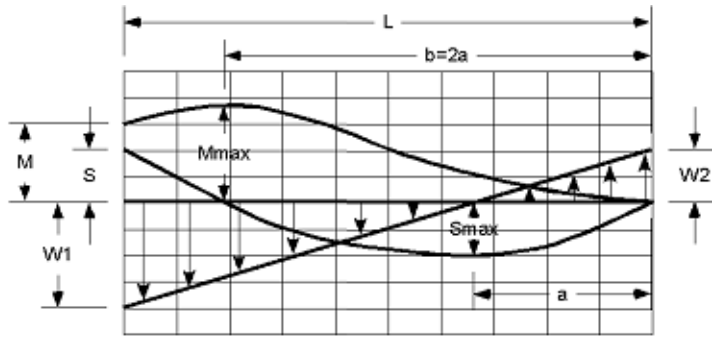

$i := 1 .. \text{rows}(\text{sillside})$ $\qquad$ $\text{rows}(\text{sillside}) = 768$

$ID2_i := \text{sillside}_{i,1}$ Element ID

$LC2_i := \text{sillside}_{i,2}$ Load case number

$S3a_i := \text{sillside}_{i,5} \cdot \text{lbf}$ $\qquad$ $S4a_i := \text{sillside}_{i,6} \cdot \text{lbf}$ Picking End A Shear from data

$S_i := \sqrt{(S3a_i)^2 + (S4a_i)^2}$ Combined End A Shear

$P_i := \text{sillside}_{i,7} \cdot \text{lbf}$ Picking End A Tension from data $\qquad$ $M_i := \text{sillside}_{i,3} \cdot \text{in} \cdot \text{lbf}$ Picking Z Moment from data

$L_i := 4.981 \cdot \text{in}$ Length of beam inside socket

$$\text{mls_ratio}_i := \text{if}\left(S_i = 0, 1000, \frac{M_i}{S_i \cdot L_i}\right) \qquad \text{slm_ratio}_i := \text{if}\left(M_i = 0, 1000, S_i \cdot \frac{L_i}{M_i}\right)$$

Calculated values are then:

$$w1_i := \begin{cases} \dfrac{K1_i \cdot M_i}{(L_i)^2} & \text{if } |slm_ratio_i| \le 1 \\ \dfrac{K1_i \cdot S_i}{L_i} & \text{otherwise} \end{cases} \qquad w2_i := \begin{cases} \dfrac{K2_i \cdot M_i}{(L_i)^2} & \text{if } |slm_ratio_i| \le 1 \\ \dfrac{K2_i \cdot S_i}{L_i} & \text{otherwise} \end{cases}$$

$$a_i := Ka_i \cdot L_i$$

Max. shear

$$Smax_i := \begin{cases} \dfrac{(-Ks)_i \cdot M_i}{L_i} & \text{if } |slm_ratio_i| \le 1 \\ -K2_i \cdot S_i & \text{otherwise} \end{cases}$$

Max. Bending moment

$$Mmax_i := \begin{cases} Km_i \cdot M_i & \text{if } |slm_ratio_i| \le 1 \\ Km_i \cdot S_i \cdot L_i & \text{otherwise} \end{cases}$$

Now check:

$$Sc_i := \frac{w1_i - w2_i}{2} \cdot L_i$$

$$Mc_i := \frac{(-w1)_i + 2 \cdot w2_i}{6} \cdot (L_i)^2$$

Percent error:

$$S_percentdiff_i := \frac{S_i - Sc_i}{S_i}$$

$$M_percentdiff_i := \frac{M_i - Mc_i}{M_i}$$

Prepared By	Name	Date		File Name
	Brent Dyer	02/15/06		UTBB-bklg.mcd
Checked By	C. Bala		**Engineering and Science Contract Group** *Structural Analysis Section*	Drawing No. SDG39135728
Title	USS-02 Upper Trunnion Bridge Beam			

To view graph with a specific load case, assign j a value $j := 744$

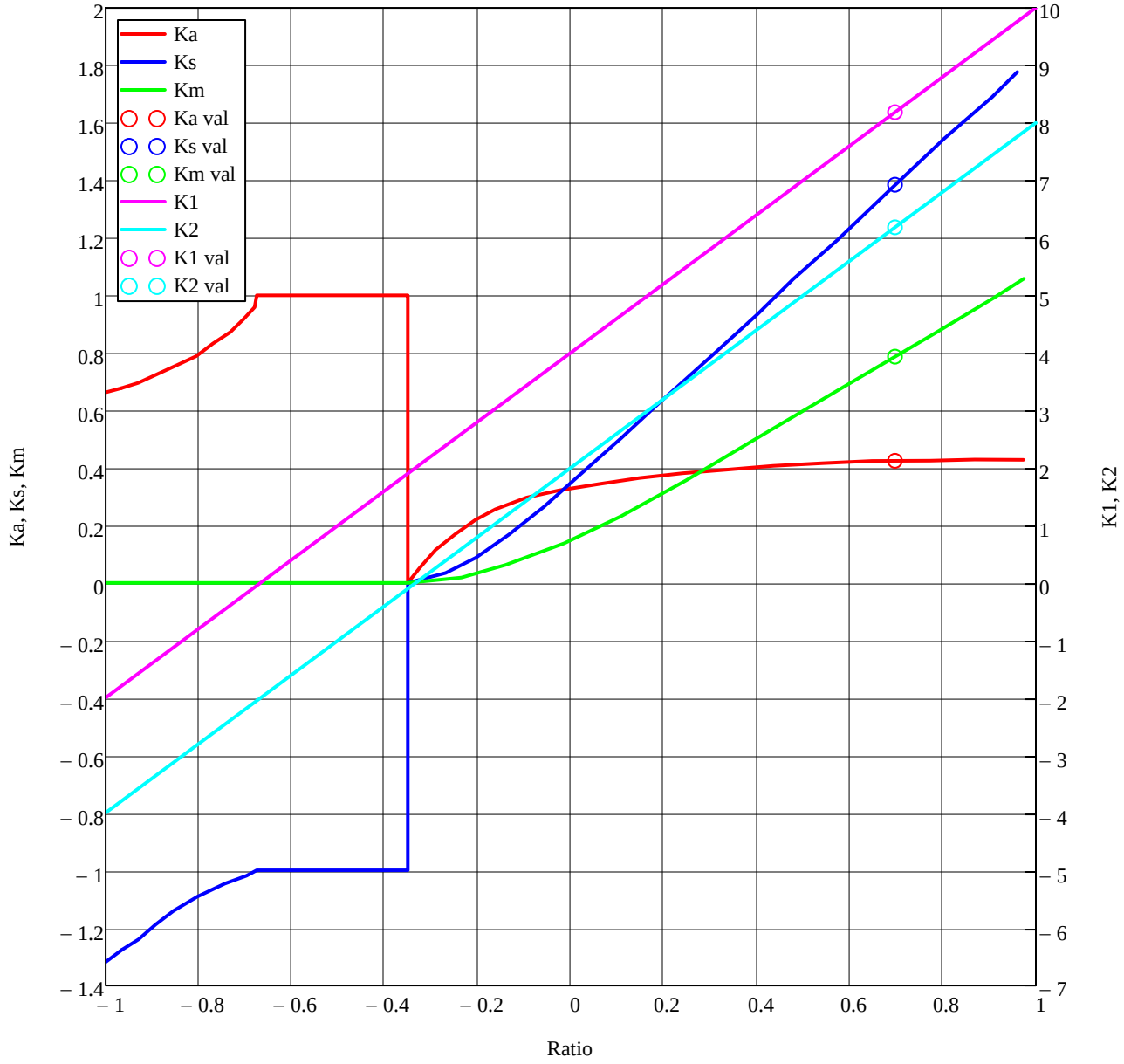

Beam and Socket Coefficients
Note if abs(SL/M) <= 1, Ratio = SL/M, otherwise Ratio = M/SL.

For this specific load case,

$S_j = 4788\,\text{lbf}$

$M_j = 16629\,\text{in}\cdot\text{lbf}$

Max Shear: $Smax_j = -29607\,\text{lbf}$ Shear Check: $Sc_j = 4788.3\,\text{lbf}$

Max moment: $Mmax_j = 18764\,\text{in}\cdot\text{lbf}$ Moment Check: $M_j = 16629\,\text{in}\cdot\text{lbf}$

With percent error $S_percentdiff_j = 0\,\%$

$M_percentdiff_j = 0\,\%$

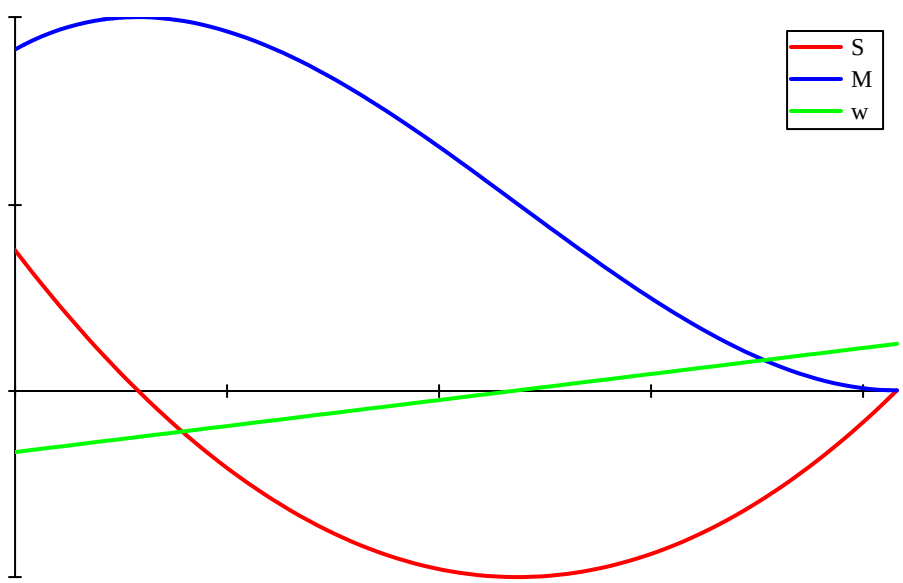

Actual Shear and Moment Distribution Inside Socket

Stresses

Total moment

Bending Tensile stress $\sigma_i := \frac{Mmax_i}{Sz}$ $\max(\sigma) = 3554.1\ psi$

Shear stress $\tau soc_i := \frac{|Smax_i|}{A}$ $\max(\tau soc) = 4407.2\ psi$

Axial tension stress $\sigma a_i := \frac{P_i}{A}$ $\max(\sigma a) = 5306.49\ psi$

Stress Ratios

Axial (ult) $Ra := \frac{\sigma a \cdot FSu}{ftu \cdot ctu}$

Bending (ult) $Rb := \frac{FSu \cdot \sigma}{ftu \cdot ctu}$

Shear (ult) $Rs := \frac{FSu \cdot \tau soc}{fsu \cdot ctu}$

Axial (yld) $Ray := \frac{\sigma a \cdot FSy}{fty \cdot cty}$

Bending (yld) $Rby := \frac{FSy \cdot \sigma}{fty \cdot cty}$

Shear(yld) $Rsy := \frac{FSy \cdot \tau soc}{fty \cdot cty}$

Margins of safety

Margin of safety ultimate $MS2u := \frac{1}{\sqrt{(Ra + Rb)^2 + Rs^2}} - 1$ $\min(MS2u) = 3.33$

Margin of safety yield $MS2y := \frac{1}{\sqrt{(Ray + Rby)^2 + Rsy^2}} - 1$ $\min(MS2y) = 3.84$

Reference - Beam and Socket Margin of Safety - Sill Joint Side - Moment Z

See below for the ultimate minimum margin of safety with element and load case information:

$output1 := augment(ID2, LC2, MS2u)$ $\qquad$ $sorted := csort(output1, 3)$

$$\left(sorted^T\right)^{\langle 1 \rangle^T} = (1101 \quad 1016 \quad 3.33)$$

Based upon the output of SORT function above, it reads:

Element ID = 1101

Load ID = 1016

MS1u = 3.33

See below for the yield minimum margin of safety with element and load case information:

$output1 := augment(ID2, LC2, MS2y)$ $\qquad$ $sorted := csort(output1, 3)$

$$\left(sorted^T\right)^{\langle 1 \rangle^T} = (1101 \quad 1016 \quad 3.84)$$

Based upon the output of SORT function above, it reads:

Element ID = 1101

Load ID = 1016

MS1y = 3.84

Beam and Socket Analysis: Upper Vacuum Case Joint Side

The following loop stacks element IDs 1103, 1106, 1107, and 1110 so that the data can be used only on the Sill Joint side of the beam element. The loop below takes the original data from the "loads" database and pulls out only the data for element IDs 1103, 1106, 1107, and 1110. This includes loads and moments from beam end A and B, although only end A loads and moments are used for the beam and socket analysis.

$\text{rows}(\text{load}) = 2304 \qquad \text{cols}(\text{load}) = 16$

$$\text{vcside} := \left| \begin{array}{l} k \leftarrow 0 \\ \text{for } i \in 1 .. \text{rows}(\text{load}) \\ \quad \text{if } \text{load}_{i,1} = 1103 \vee \text{load}_{i,1} = 1106 \vee \text{load}_{i,1} = 1107 \vee \text{load}_{i,1} = 1110 \\ \quad\quad \left| \begin{array}{l} k \leftarrow k + 1 \\ \text{newdata}^{\langle k \rangle} \leftarrow \left(\text{load}^T\right)^{\langle i \rangle} \end{array} \right. \\ \text{newdata}^T \end{array} \right.$$

Beam and Socket Analysis: Upper Vacuum Case Joint Side (Moment about Y)

Treating the connection as a Beam in a Socket, as per SMM, Memo 41a

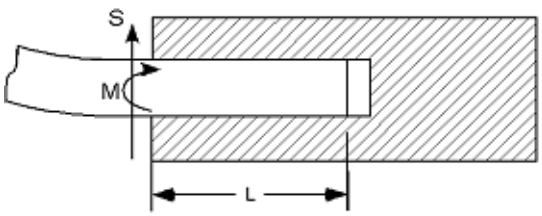

S and M are respectively beam shear in lbf and moment in in-lbf at end of socket. W is unit loading in lbf/in.

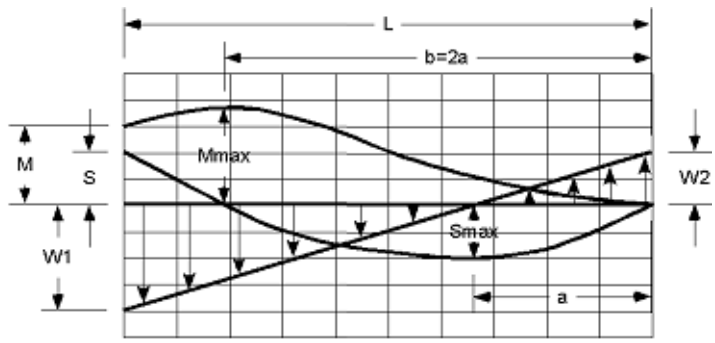

$i := 1 .. \text{rows}(vcside)$ $\qquad$ $\text{rows}(vcside) = 768$

$ID3_i := vcside_{i,1}$ Element ID

$LC3_i := vcside_{i,2}$ Load case number

$S5a_i := vcside_{i,5} \cdot lbf$ $\qquad$ $S6a_i := vcside_{i,6} \cdot lbf$ Picking End A Shear from data

$S_i := \sqrt{(S5a_i)^2 + (S6a_i)^2}$ Combined End A Shear

$P_i := vcside_{i,7} \cdot lbf$ Picking End A Tension from data $\qquad$ $M_i := vcside_{i,4} \cdot in \cdot lbf$ Picking Y Moment from data

$L_i := 4.860 \cdot in$ Length of beam inside socket

$$mls_ratio_i := \text{if}\left(S_i = 0, 1000, \frac{M_i}{S_i \cdot L_i}\right) \qquad slm_ratio_i := \text{if}\left(M_i = 0, 1000, S_i \cdot \frac{L_i}{M_i}\right)$$

Calculated values are then:

$$w1_i := \begin{cases} \dfrac{K1_i \cdot M_i}{(L_i)^2} & \text{if } |slm_ratio_i| \le 1 \\ \dfrac{K1_i \cdot S_i}{L_i} & \text{otherwise} \end{cases} \qquad w2_i := \begin{cases} \dfrac{K2_i \cdot M_i}{(L_i)^2} & \text{if } |slm_ratio_i| \le 1 \\ \dfrac{K2_i \cdot S_i}{L_i} & \text{otherwise} \end{cases}$$

$$a_i := Ka_i \cdot L_i$$

Max. shear

$$Smax_i := \begin{cases} \dfrac{(-Ks)_i \cdot M_i}{L_i} & \text{if } |slm_ratio_i| \le 1 \\ -K2_i \cdot S_i & \text{otherwise} \end{cases}$$

Max. Bending moment

$$Mmax_i := \begin{cases} Km_i \cdot M_i & \text{if } |slm_ratio_i| \le 1 \\ Km_i \cdot S_i \cdot L_i & \text{otherwise} \end{cases}$$

Now check:

$$Sc_i := \frac{w1_i - w2_i}{2} \cdot L_i$$

$$Mc_i := \frac{(-w1)_i + 2 \cdot w2_i}{6} \cdot (L_i)^2$$

Percent error:

$$S_percentdiff_i := \frac{S_i - Sc_i}{S_i}$$

$$M_percentdiff_i := \frac{M_i - Mc_i}{M_i}$$

Prepared By	Name	Date	Engineering and Science Contract Group	File Name
	Brent Dyer	02/15/06		UTBB-bklg.mcd
Checked By	C. Bala		*Structural Analysis Section*	Drawing No. SDG39135728
Title	USS-02 Upper Trunnion Bridge Beam			

To view graph with a specific load case, assign j a value $j := 61$

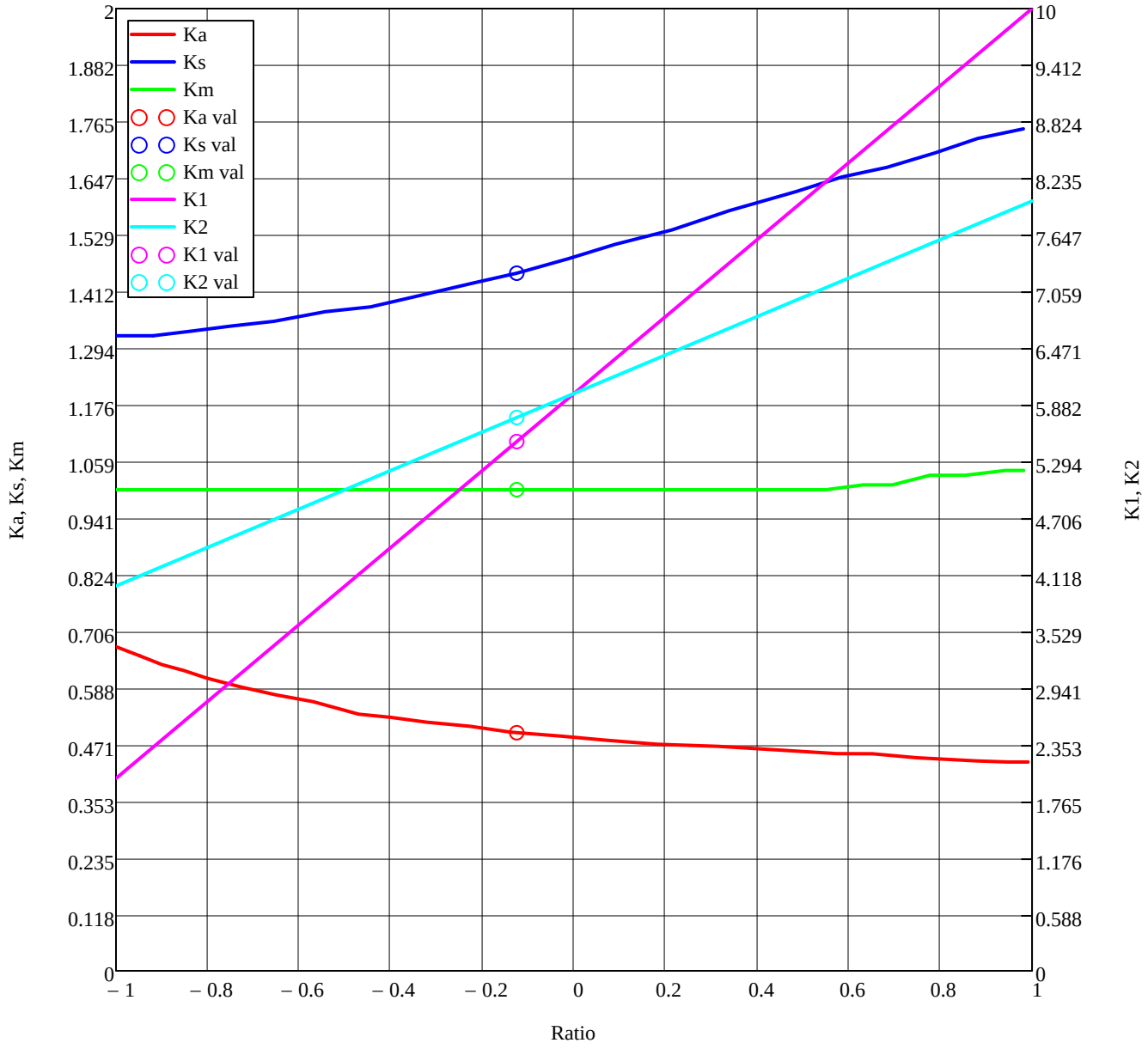

Beam and Socket Coefficients
Note if abs(SL/M) <= 1, Ratio = SL/M, otherwise Ratio = M/SL.

For this specific load case,

$S_j = 2175\,\text{lbf}$

$M_j = -84529\,\text{in}\cdot\text{lbf}$

Max Shear: $Smax_j = 25219\,\text{lbf}$ Shear Check: $Sc_j = 2174.5\,\text{lbf}$

Max moment: $Mmax_j = -84529\,\text{in}\cdot\text{lbf}$ Moment Check: $M_j = -84529\,\text{in}\cdot\text{lbf}$

With percent error $S_percentdiff_j = -0\,\%$

$M_percentdiff_j = 0\,\%$

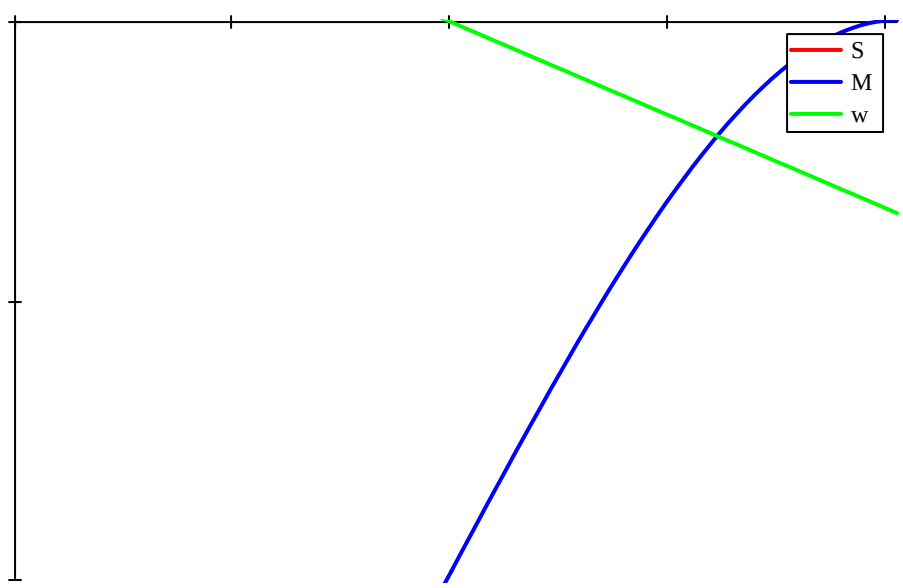

Actual Shear and Moment Distribution Inside Socket

Stresses

Total moment

Bending Tensile stress $\sigma_i := \frac{Mmax_i}{Sy}$ $\max(\sigma) = 7706.3\,psi$

Shear stress $\tau soc_i := \frac{|Smax_i|}{A}$ $\max(\tau soc) = 5534.8\,psi$

Axial tension stress $\sigma a_i := \frac{P_i}{A}$ $\max(\sigma a) = 5186.067\,psi$

Stress Ratios

Axial (ult) $Ra := \frac{\sigma a \cdot FSu}{ftu \cdot ctu}$

Bending (ult) $Rb := \frac{FSu \cdot \sigma}{ftu \cdot ctu}$

Shear (ult) $Rs := \frac{FSu \cdot \tau soc}{fsu \cdot ctu}$

Axial (yld) $Ray := \frac{\sigma a \cdot FSy}{fty \cdot cty}$

Bending (yld) $Rby := \frac{FSy \cdot \sigma}{fty \cdot cty}$

Shear(yld) $Rsy := \frac{FSy \cdot \tau soc}{fty \cdot cty}$

Margins of safety

Margin of safety ultimate $MS3u := \frac{1}{\sqrt{(Ra + Rb)^2 + Rs^2}} - 1$ $\min(MS3u) = 1.28$

Margin of safety yield $MS3y := \frac{1}{\sqrt{(Ray + Rby)^2 + Rsy^2}} - 1$ $\min(MS3y) = 1.73$

Reference - Beam and Socket Margin of Safety - Upper Vacuum Case Joint Side - Moment Y

See below for the ultimate minimum margin of safety with element and load case information:

$output1 := augment(ID3, LC3, MS3u)$ $\qquad$ $sorted := csort(output1, 3)$

$$\left(sorted^{T}\right)^{\langle 1 \rangle^{T}} = (1103 \quad 4016 \quad 1.28)$$

Based upon the output of SORT function above, it reads:

Element ID = 1103

Load ID = 4016

MS1u = 1.28

See below for the yield minimum margin of safety with element and load case information:

$output1 := augment(ID3, LC3, MS3y)$ $\qquad$ $sorted := csort(output1, 3)$

$$\left(sorted^{T}\right)^{\langle 1 \rangle^{T}} = (1103 \quad 4016 \quad 1.73)$$

Based upon the output of SORT function above, it reads:

Element ID = 1103

Load ID = 4016

MS1y = 1.73

Beam and Socket Analysis: Upper Vacuum Case Joint Side (Moment about Z)

Treating the connection as a Beam in a Socket, as per SMM, Memo 41a

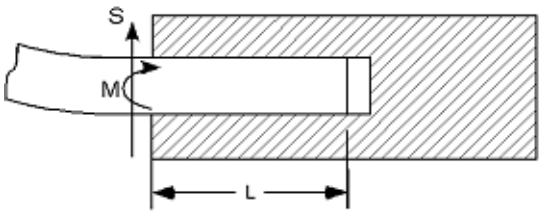

S and M are respectively beam shear in lbf and moment in in-lbf at end of socket. W is unit loading in lbf/in.

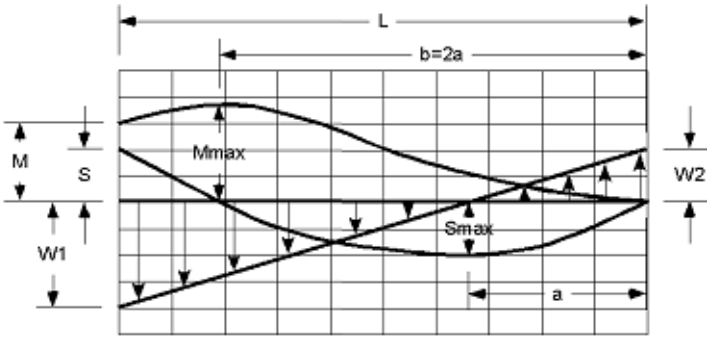

$i := 1 .. \text{rows}(\text{vcside})$ $\qquad$ $\text{rows}(\text{vcside}) = 768$

$ID4_i := \text{vcside}_{i,1}$ Element ID

$LC4_i := \text{vcside}_{i,2}$ Load case number

$S7a_i := \text{vcside}_{i,5} \cdot \text{lbf}$ $\qquad$ $S8a_i := \text{vcside}_{i,6} \cdot \text{lbf}$ Picking End A Shear from data

$S_i := \sqrt{(S7a_i)^2 + (S8a_i)^2}$ Combined End A Shear

$P_i := \text{vcside}_{i,7} \cdot \text{lbf}$ Picking End A Tension from data $\qquad$ $M_i := \text{vcside}_{i,3} \cdot \text{in} \cdot \text{lbf}$ Picking Z Moment from data

$L_i := 4.860 \cdot \text{in}$ Length of beam inside socket

$$\text{mls_ratio}_i := \text{if}\left(S_i = 0, 1000, \frac{M_i}{S_i \cdot L_i}\right) \qquad \text{slm_ratio}_i := \text{if}\left(M_i = 0, 1000, S_i \cdot \frac{L_i}{M_i}\right)$$

Calculated values are then:

$$w1_i := \begin{cases} \dfrac{K1_i \cdot M_i}{(L_i)^2} & \text{if } |slm_ratio_i| \le 1 \\ \dfrac{K1_i \cdot S_i}{L_i} & \text{otherwise} \end{cases} \qquad w2_i := \begin{cases} \dfrac{K2_i \cdot M_i}{(L_i)^2} & \text{if } |slm_ratio_i| \le 1 \\ \dfrac{K2_i \cdot S_i}{L_i} & \text{otherwise} \end{cases}$$

$$a_i := Ka_i \cdot L_i$$

Max. shear

$$Smax_i := \begin{cases} \dfrac{(-Ks)_i \cdot M_i}{L_i} & \text{if } |slm_ratio_i| \le 1 \\ -K2_i \cdot S_i & \text{otherwise} \end{cases}$$

Max. Bending moment

$$Mmax_i := \begin{cases} Km_i \cdot M_i & \text{if } |slm_ratio_i| \le 1 \\ Km_i \cdot S_i \cdot L_i & \text{otherwise} \end{cases}$$

Now check:

$$Sc_i := \frac{w1_i - w2_i}{2} \cdot L_i$$

$$Mc_i := \frac{(-w1)_i + 2 \cdot w2_i}{6} \cdot (L_i)^2$$

Percent error:

$$S_percentdiff_i := \frac{S_i - Sc_i}{S_i}$$

$$M_percentdiff_i := \frac{M_i - Mc_i}{M_i}$$

To view graph with a specific load case, assign j a value $j := 573$

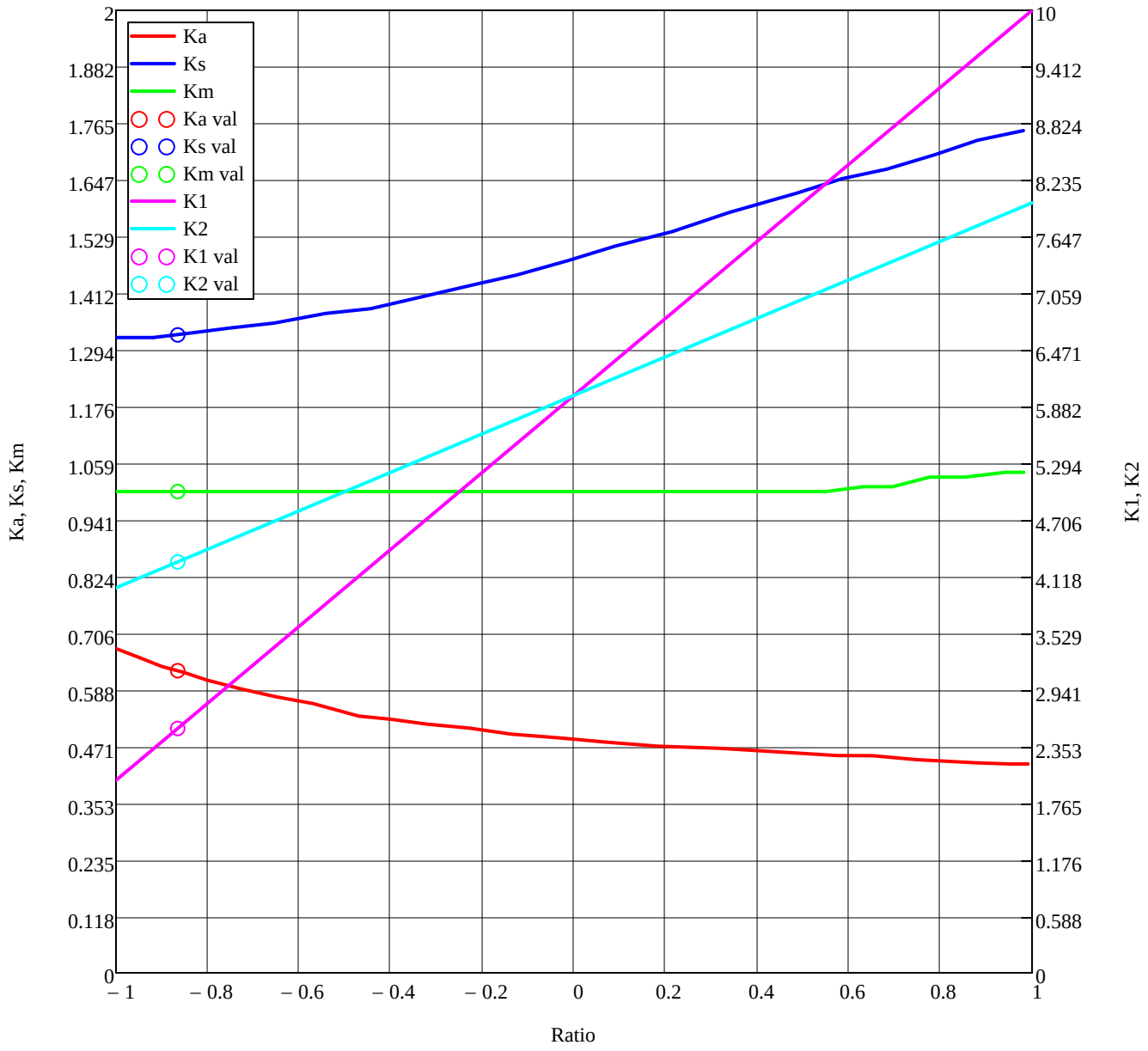

Beam and Socket Coefficients
Note if abs(SL/M) <= 1, Ratio = SL/M, otherwise Ratio = M/SL.

For this specific load case,

$S_j = 1863\,\text{lbf}$

$M_j = -10461\,\text{in}\cdot\text{lbf}$

Max Shear: $Smax_j = 2853\,\text{lbf}$ Shear Check: $Sc_j = 1862.7\,\text{lbf}$

Max moment: $Mmax_j = -10461\,\text{in}\cdot\text{lbf}$ Moment Check: $M_j = -10461\,\text{in}\cdot\text{lbf}$

With percent error $S_percentdiff_j = -0\,\%$

$M_percentdiff_j = -0\,\%$

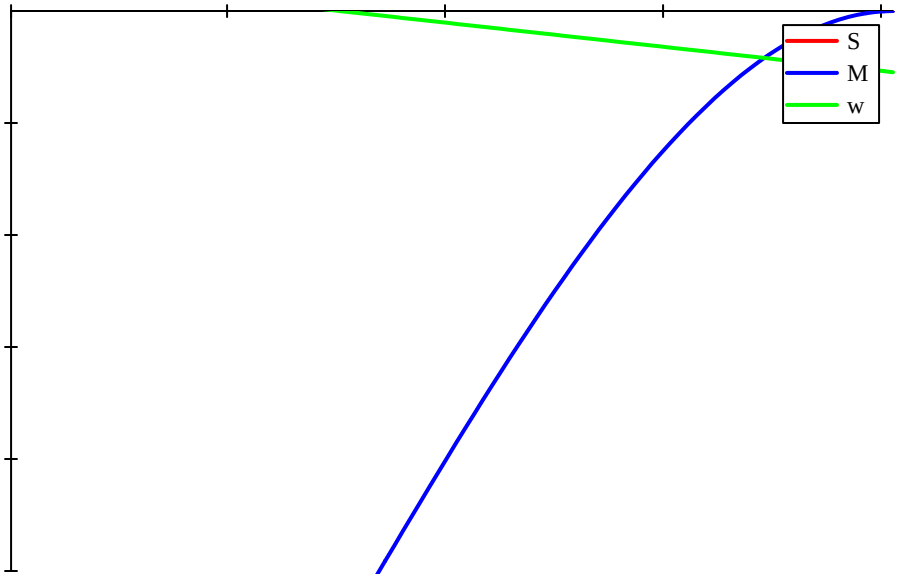

Actual Shear and Moment Distribution Inside Socket

Stresses

Total moment

Bending Tensile stress $\sigma_i := \frac{Mmax_i}{Sz}$ $\max(\sigma) = 2894.4\,psi$

Shear stress $\tau soc_i := \frac{|Smax_i|}{A}$ $\max(\tau soc) = 3419.6\,psi$

Axial tension stress $\sigma a_i := \frac{P_i}{A}$ $\max(\sigma a) = 5186.067\,psi$

Stress Ratios

Axial (ult) $Ra := \frac{\sigma a \cdot FSu}{ftu \cdot ctu}$

Bending (ult) $Rb := \frac{FSu \cdot \sigma}{ftu \cdot ctu}$

Shear (ult) $Rs := \frac{FSu \cdot \tau soc}{fsu \cdot ctu}$

Axial (yld) $Ray := \frac{\sigma a \cdot FSy}{fty \cdot cty}$

Bending (yld) $Rby := \frac{FSy \cdot \sigma}{fty \cdot cty}$

Shear(yld) $Rsy := \frac{FSy \cdot \tau soc}{fty \cdot cty}$

Margins of safety

Margin of safety ultimate $MS4u := \frac{1}{\sqrt{(Ra + Rb)^2 + Rs^2}} - 1$ $\min(MS4u) = 3.89$

Margin of safety yield $MS4y := \frac{1}{\sqrt{(Ray + Rby)^2 + Rsy^2}} - 1$ $\min(MS4y) = 4.43$

Reference - Beam and Socket Margin of Safety - Upper Vacuum Case Joint Side - Moment Z

See below for the ultimate minimum margin of safety with element and load case information:

$output1 := augment(ID4, LC4, MS4u)$ $\qquad$ $sorted := csort(output1, 3)$

$$\left(sorted^T\right)^{\langle 1 \rangle T} = (1103 \quad 1016 \quad 3.89)$$

Based upon the output of SORT function above, it reads:

Element ID = 1103

Load ID = 1016

MS1u = 3.89

See below for the yield minimum margin of safety with element and load case information:

$output1 := augment(ID4, LC4, MS4y)$ $\qquad$ $sorted := csort(output1, 3)$

$$\left(sorted^T\right)^{\langle 1 \rangle T} = (1103 \quad 1016 \quad 4.43)$$

Based upon the output of SORT function above, it reads:

Element ID = 1103

Load ID = 1016

MS1y = 4.43

Summary of Minimum Margin of Safety:

The ultimate minimum margin of safety is 1.28 and occurs in the beam and socket analysis for the upper vacuum case side (Moment about Y). See page 2.1.2 - 28.

The yield minimum margin of safety is 1.73 and occurs in the beam and socket analysis for the upper vacuum case side (Moment about Y). See page 2.1.2 - 28.

2.1.3 Sill Joint

SUMMARY OF CRITICAL MARGINS OF SAFETY

Note:

1) A = Axial, S = Shear, B = Buckling, Bg = Bending
2) In structural analysis, factors of safety are 1.4 ,1.1 and 1.0 for ultimate, yield and fail-safe loads, respectively
3) Margin of Safety that is greater than 5.0 is defined as High M.S.
4) U = Ultimate, Y = Yield, F = Fail-Safe
5) Allowables includes temperature red. factors of 0.92 and 0.98 for ultimate and yield, respectively

Part Information				Structural Analysis					
Member	DWG. No.	Specification	Material	Load Type	Load or Stress			M.S.	Ref. Page
					Applied	Allowable			
Sill Joint	SDG39135730	AL 7050-T7451	BMS 7-323C	A,Bg	26689psi	66000psi	u	0.55	2.1.3-10

1. Introduction:

The picture shows the finite element model of the USS

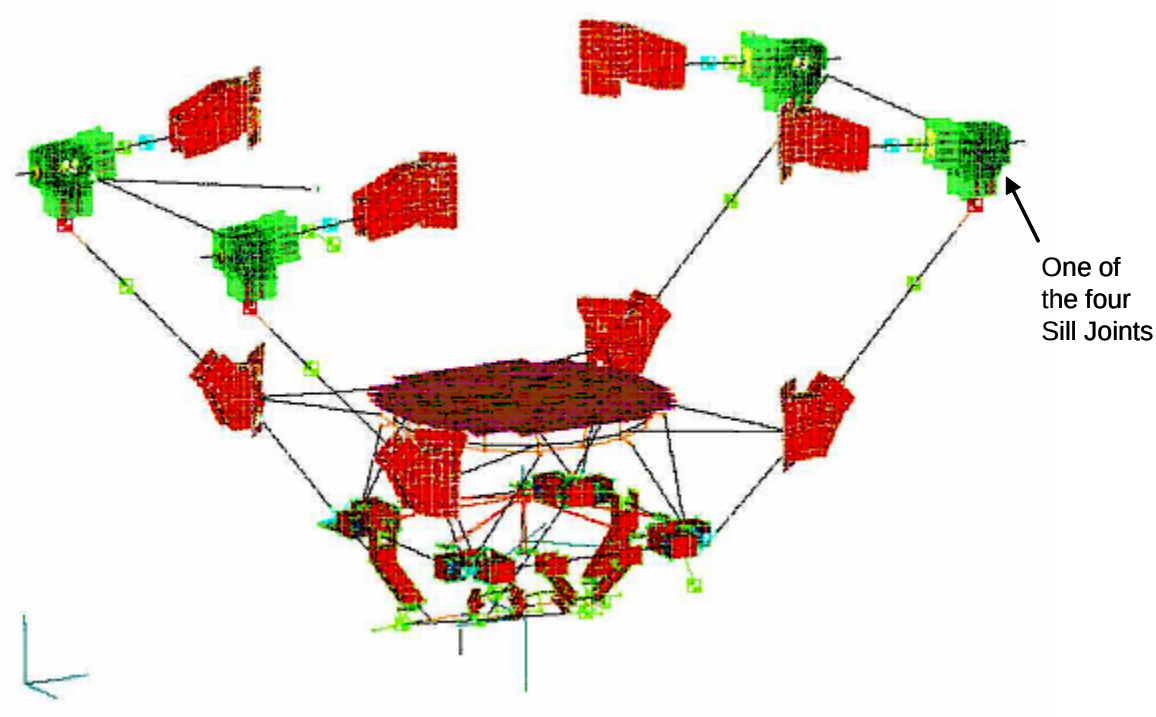

This picture shows the finite element model of one of the sill joints.

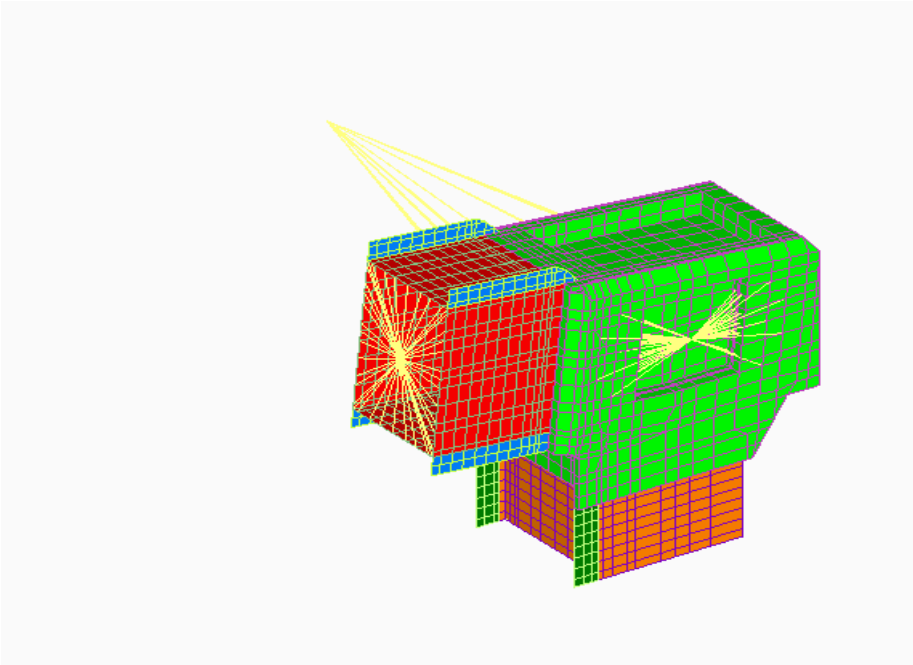

2. Method:

a. Four joints are modeled.
b. These joints are meshed as CHEXA, CPENTA, CQUAD4, and CTRIA3 elements in FEMAP V.8.1.
c. Material used is 7050-T7451 AL plate, BMS 7-323C.
d. RSSCON elements are applied in connecting plate to solid elements.
e. The joints are imported into USS-11-02 model.
f. CBUSH and RBE elements are used to connect the joints to USS.
g. The entire AMS-02 model is analyzed by using MSC/NASTRAN V.2001.

3. Model Information:

a. The NASTRAN data file is at: /hsm/vbulsara/ams2/silljnt

b. The model check of the Sill Joint is performed. The results below show that the FEA math model is correct.

i. For matrix KGG:

```
RESULTS OF RIGID BODY CHECKS OF MATRIX KGG      (G-SET)  FOLLOW:
PRINT RESULTS IN ALL SIX DIRECTIONS AGAINST THE LIMIT OF   1.000000E-03
    DIRECTION        STRAIN ENERGY        PASS/FAIL
    ---------        -------------        ---------
      1              1.325338E-07         PASS
      2              2.422667E-09         PASS
      3              1.424255E-07         PASS
      4              2.664973E-06         PASS
      5              3.564759E-06         PASS
      6              4.169498E-08         PASS
SOME POSSIBLE REASONS MAY LEAD TO THE FAILURE:
  1. CELASI ELEMENTS CONNECTING TO ONLY ONE GRID POINT;
  2. CELASI ELEMENTS CONNECTING TO NON-COINCIDENT POINTS;
  3. CELASI ELEMENTS CONNECTING TO NON-COLINEAR DOF;
  4. IMPROPERLY DEFINED DMIG MATRICES;
```

ii. For matrix KNN:

```
RESULTS OF RIGID BODY CHECKS OF MATRIX KNN      (N-SET)  FOLLOW:
PRINT RESULTS IN ALL SIX DIRECTIONS AGAINST THE LIMIT OF   1.000000E-03
    DIRECTION        STRAIN ENERGY        PASS/FAIL
    ---------        -------------        ---------
      1              2.105031E-07         PASS
      2              1.213717E-07         PASS
      3              3.563264E-07         PASS
      4              7.065958E-06         PASS
      5              6.315909E-06         PASS
      6              7.459586E-07         PASS
SOME POSSIBLE REASONS MAY LEAD TO THE FAILURE:
  1. MULTIPOINT CONSTRAINT EQUATIONS WHICH DO NOT SATISFY RIGID-BODY MOTION;
  2. RBE3 ELEMENTS FOR WHICH THE INDEPENDENT DEGREE-OF-FREEDOM CANNOT DESCRIBE
     ALL POSSIBLE RIGID-BODY MOTIONS.
```

iii.For matrix KFF:

```
RESULTS OF RIGID BODY CHECKS OF MATRIX KFF      (F-SET)  FOLLOW:
PRINT RESULTS IN ALL SIX DIRECTIONS AGAINST THE LIMIT OF   1.000000E-03
    DIRECTION        STRAIN ENERGY        PASS/FAIL
    ---------        -------------        ---------
      1              2.105031E-07         PASS
      2              1.213717E-07         PASS
      3              3.563264E-07         PASS
      4              7.065958E-06         PASS
      5              6.315909E-06         PASS
      6              7.459586E-07         PASS
SOME POSSIBLE REASONS MAY LEAD TO THE FAILURE:
  1. CONSTRAINTS WHICH PREVENT RIGID-BODY MOTION.
```

3. Model Information: (Cont'd)

iv. Eigenvalue Summary: First six modes are zero; transition modes are well separated.

REAL EIGENVALUES

MODE NO.	EXTRACTION ORDER	EIGENVALUE	RADIANS	CYCLES	GENERALIZED MASS	GENERALIZED STIFFNESS
1	1	-7.63E-06	2.76E-03	4.40E-04	1.00E+00	-7.63E-06
2	2	-4.62E-06	2.15E-03	3.42E-04	1.00E+00	-4.62E-06
3	3	-2.27E-06	1.51E-03	2.40E-04	1.00E+00	-2.27E-06
4	4	-8.74E-07	9.35E-04	1.49E-04	1.00E+00	-8.74E-07
5	5	7.03E-08	2.65E-04	4.22E-05	1.00E+00	7.03E-08
6	6	4.15E-06	2.04E-03	3.24E-04	1.00E+00	4.15E-06
7	7	1.32E+08	1.15E+04	1.83E+03	1.00E+00	1.32E+08
8	8	1.47E+08	1.21E+04	1.93E+03	1.00E+00	1.47E+08
9	9	2.08E+08	1.44E+04	2.29E+03	1.00E+00	2.08E+08
10	10	2.46E+08	1.57E+04	2.49E+03	1.00E+00	2.46E+08

v. Weight Summary: (Total weight = 386.0886 * MASS = 386.0886x0.2173418= 83.9lbf)

```
                    O U T P U T   F R O M   W E I G H T   C H E C K
0                          DEGREES OF FREEDOM SET = G
0                          REFERENCE POINT =      0
                                M O
* 2.173418E-01  1.058791E-22 -1.323489E-23 -4.502088E-20  8.984087E+01 -1.796666E+01 *
* 1.058791E-22  2.173418E-01 -1.084202E-19 -8.984087E+01 -4.220690E-18 -8.552584E+00 *
* -1.323489E-23 -1.084202E-19  2.173418E-01  1.796666E+01  8.552584E+00  4.265711E-18 *
* -4.502088E-20 -8.984087E+01  1.796666E+01  3.862740E+04  7.069803E+02  3.535327E+03 *
* 8.984087E+01 -4.220690E-18  8.552584E+00  7.069803E+02  3.747626E+04 -7.426416E+03 *
* -1.796666E+01 -8.552584E+00  4.265711E-18  3.535327E+03 -7.426416E+03  1.825805E+03 *
                                S
                  * 1.000000E+00  0.000000E+00  0.000000E+00 *
                  * 0.000000E+00  1.000000E+00  0.000000E+00 *
                  * 0.000000E+00  0.000000E+00  1.000000E+00 *
            DIRECTION
        MASS AXIS SYSTEM (S)     MASS            X-C.G.       Y-C.G.       Z-C.G.
             X          2.173418E-01     -2.071432E-19  8.266544E+01  4.133621E+02
             Y          2.173418E-01     -3.935084E+01 -1.941959E-17  4.133621E+02
             Z          2.173418E-01     -3.935084E+01  8.266544E+01  1.962674E-17
                                I(S)
                  * 5.366632E+00  2.275656E-02 -1.339264E-02 *
                  * 2.275656E-02  2.895199E+00 -3.193807E-01 *
                  * -1.339264E-02 -3.193807E-01  4.032175E+00 *
                                I(Q)
                  * 4.115705E+00                    *
                  *            2.811374E+00         *
                  *                        5.366926E+00 *
                                Q
                  * 5.750442E-03  9.942004E-03  9.999340E-01 *
                  * -2.531980E-01  9.673800E-01 -8.162235E-03 *
                  * -9.673974E-01 -2.531343E-01  8.080158E-03 *
```

The weight of an individual sill joint from the CAD model is 58.76 lbf. The weight of an individual sill joint from the finite element model is 52.88 lbf. The output from the weight generator above includes extraneous parts with the sill joint.

See Appendix C12 for the 6-02 loads model vs.11-02 loads model strap verification.

Load	STRAP FORCES (lbs)															
Case	90001	90002	90003	90004	90005	90006	90007	90008	90009	90010	90011	90012	90013	90014	90015	90016
2015	5346.9	4411.2	1382.9	1317.2	1593.7	12295.2	1545.1	7152.1	16838.6	5961.2	1672.7	1443.8	12617.1	7022.6	6956.1	3111.3
2016	2671.5	7388.6	1298.8	1414.8	1722.3	9056.2	1659.6	4167.3	19705.6	2847.6	1773.7	1355.6	9086.5	10205.0	3550.1	5818.3
1020	1062.6	1826.3	1860.4	17186.6	1156.6	1389.2	4193.3	7632.5	11144.5	1908.1	15433.4	4112.2	5586.6	1767.2	12186.2	2193.4
1053	13078.9	1890.0	13897.7	3761.0	4990.7	1588.7	14756.8	2693.6	1241.4	1832.4	1825.6	15495.8	1146.4	1266.3	6147.2	7531.3

Table 1. STRAP FORCES FROM LOAD MODEL 6-02

Load	STRAP FORCES (lbs)															
Case	90001	90002	90003	90004	90005	90006	90007	90008	90009	90010	90011	90012	90013	90014	90015	90016
2015	5386.8	4264.9	1386.3	1318.1	1607.1	12375.3	1545.4	6975.0	16763.9	5950.6	1678.1	1446.6	12534.6	7072.4	6765.1	3004.7
2016	2733.2	7173.3	1301.3	1412.4	1728.5	9007.5	1665.7	4305.7	19776.2	2874.7	1775.1	1353.0	8878.3	10249.3	3503.9	5809.0
1020	1073.7	1821.5	1859.4	17134.6	1170.8	1390.0	4137.9	7496.5	11127.2	1908.3	15423.4	4201.7	5572.5	1763.2	12106.2	2122.2
1053	13025.7	1891.3	13759.9	3573.5	4861.5	1596.7	14639.5	2727.1	1241.7	1830.2	1823.3	15534.3	1147.7	1264.6	6223.7	7688.2

Table 2. STRAP FORCES FROM SILL JOINT MODEL

Load	PERCENT DIFFERENCE OF STRAP FORCES (%)															
Case	90001	90002	90003	90004	90005	90006	90007	90008	90009	90010	90011	90012	90013	90014	90015	90016
2015	0.7	3.3	0.2	0.1	0.8	0.7	0.0	2.5	0.4	0.2	0.3	0.2	0.7	0.7	2.7	3.4
2016	2.3	2.9	0.2	0.2	0.4	0.5	0.4	3.3	0.4	1.0	0.1	0.2	2.3	0.4	1.3	0.2
1020	1.0	0.3	0.1	0.3	1.2	0.1	1.3	1.8	0.2	0.0	0.1	2.2	0.3	0.2	0.7	3.2
1053	0.4	0.1	1.0	5.0	2.6	0.5	0.8	1.2	0.0	0.1	0.1	0.2	0.1	0.1	1.2	2.1

Table 3. PERCENT DIFFERENCE OF STRAP FORCES BETWEEN LOAD MODEL AND STRAP-PORT MODEL

3. Model Information: (Cont'd)

c. Additional model checks are based on the Trunnion loads. These loads in the Sill Joint model for each load case are closely matched with those in the loads model. Table 1 shows the results of the comparision done between these loads.

	TRUNNION FORCES (lbs)							Differences					
ID	SUBCASE	From Load Model			From SILL JOINT MODEL			FX		FY		FZ	
		FX	FY	FZ	FX	FY	FZ	(lbs)	(%)	(lbs)	(%)	(lbs)	(%)
1	2015	-23011.3	0.0	75527.3	-21875.3	0	74747.6	1136.1	4.9	-	-	779.7	1.0
2	2015	-44496.3	0.0	28599.1	-43450.1	0	27382.5	1046.2	2.4	-	-	1216.6	4.3
3	2015	0.0	0.0	-1292.5	0	0	-729.436	-	-	-	-	563.0	43.6
4	2015	0.0	0.0	-5324.2	0	0	-4735.11	-	-	-	-	589.1	11.1
5	2015	0.0	-30002.7	0.0	0	-30530.6	0	-	-	527.8	1.8	-	-
1	2016	-37455.2	0.0	74894.6	-36249.7	0.0	74247.0	1205.5	3.2	-	-	647.6	0.9
2	2016	-30049.1	0.0	29120.0	-29119.8	0.0	27812.4	929.3	3.1	-	-	1307.6	4.5
3	2016	0.0	0.0	-720.9	0.0	0.0	-274.5	-	-	-	-	446.4	61.9
4	2016	0.0	0.0	-5789.5	0.0	0.0	-5119.3	-	-	-	-	670.2	11.6
5	2016	0.0	-30000.8	0.0	0.0	-30600.4	0.0	-	-	599.6	2.0	-	-
1	1020	-56109.3	0.0	-3186.1	-55087.8	0.0	-3509.1	1021.5	1.8	-	-	323.0	10.1
2	1020	-29466.6	0.0	10841.8	-28539.9	0.0	10025.4	926.7	3.1	-	-	816.4	7.5
3	1020	0.0	0.0	-58039.5	0.0	0.0	-57321.2	-	-	-	-	718.3	1.2
4	1020	0.0	0.0	-38208.1	0.0	0.0	-36792.3	-	-	-	-	1415.8	3.7
5	1020	0.0	24025.7	0.0	0.0	24154.1	0.0	-	-	128.4	0.5	-	-
1	1053	49092.9	0.0	-49506.2	48201.6	0.0	-48282.6	891.3	1.815	-	-	1223.54	2.471
2	1053	36414.5	0.0	-47209.6	35421.9	0.0	-46554.1	992.6	2.726	-	-	655.52	1.389
3	1053	0.0	0.0	-919.6	0.0	0.0	-1582.9	-	-	-	-	663.324	72.13
4	1053	0.0	0.0	9127.6	0.0	0.0	8735.4	-	-	-	-	392.198	4.297

Table 1: Check of the Trunnion Loads

4. Load and Constraint:

The entire AMS-02 math model is constrained at five Trunnion locations whose GRID IDs are 1 and 2 with DOF(1 and 3), 3 and 4 with DOF(3), and 5 with DOF(2).

All 128 load cases under the launch and landing situations were investigated in order to indentify the worst result.

5. Result:

Material Properties : 7050-T7451 AL plate, BMS 7-323C

$F_{tu} := 66000 \cdot psi$

$F_{ty} := 56000 \cdot psi$

$F_{su} := 44000 \cdot psi$

(MIL-HDBK-5J, Table 3.7.4.0(b_1), t = 6.001"-7.000")
conservatively using ST values

Factor of Safety, $FS_u := 1.4$ $FS_y := 1.1$

Temperature Ranges per Appendix C2:

Launch (40F to 120F)

Abort Landing (40F to 150F)

Nominal Landing (-78F to 101F)

Temperature reduction factor at 150°F,

$\gamma_u := 0.88$ $\gamma_y := 0.95$ *(Ref. MIL-HDBK-5J, Figure 3.7.4.2.1)*

5. Result:

ii. For the Sill Joints:

Maximum Von-Mises, principal, and shear stresses are selected from 128 load cases for the Sill Joints. NASPOST V.2.1 is used to sort out stresses within the load cases.

The finite element models of the lower vc joints are comprised of 4 different types of elements:
1. Solid, Brick 8
2. Solid, Wedge 6
3. Plate, Quad 4
4. Plate, Tria3

Those elements that had at least one node involved in an RBE or RSSCON connection were not considered in the margin of safety calculation. Also, unusually high bearing stresses were compared to hand calculations from a beam in socket analysis. The following maximum stresses were found in the solid hex elements:

$\sigma_{uy} := 27294.27 \cdot psi$ *(Load Case 2016, Element 215327, See Appendix A16-15)*

$\sigma_{uu} := 26689.19 \cdot psi$ *(Load Case 2016, Element 215327, See Appendix A16-15)*

$\sigma_{us} := 15060.02 \cdot psi$ *(Load Case 2016, Element 215327, See Appendix A16-15)*

Margins of Safety,

yield $MS_y := \frac{F_{ty} \cdot \gamma_y}{FS_y \cdot \sigma_{uy}} - 1$ $MS_y = 0.77$

ultimate $MS_u := \frac{F_{tu} \cdot \gamma_u}{FS_u \cdot \sigma_{uu}} - 1$ $MS_u = 0.55$

shear $MS_s := \frac{F_{su} \cdot \gamma_u}{FS_u \cdot \sigma_{us}} - 1$ $MS_s = 0.84$

Element 215327 is located on the inside surface of the trunnion hole

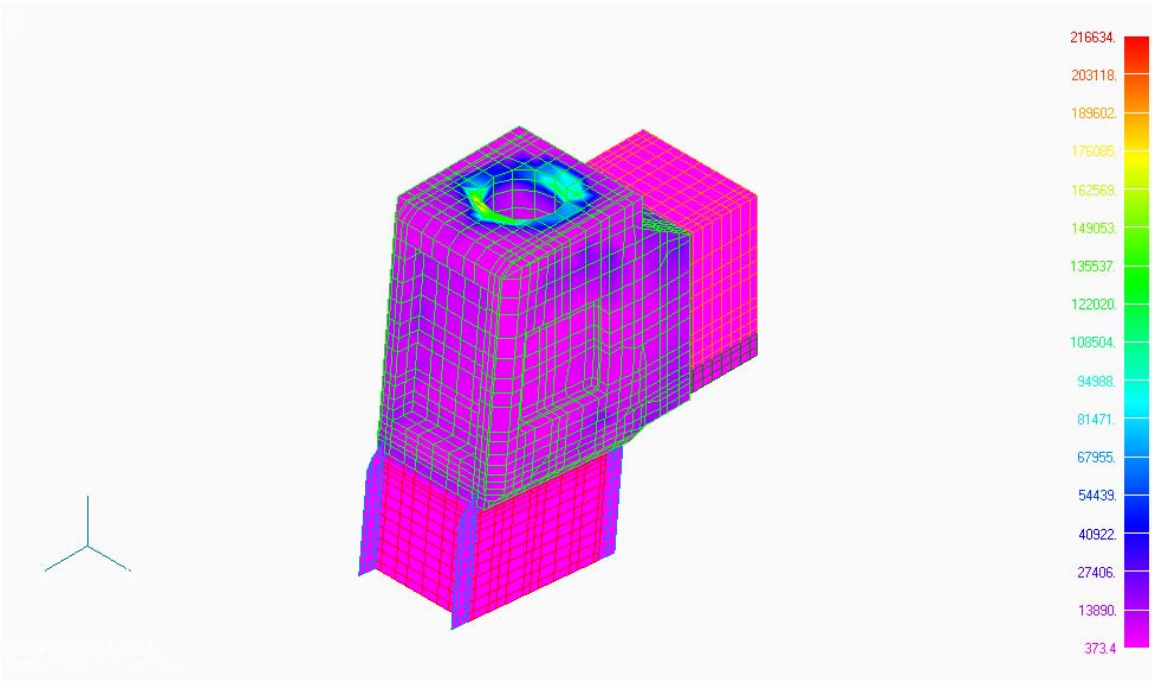

Maximum von-Mises Stress

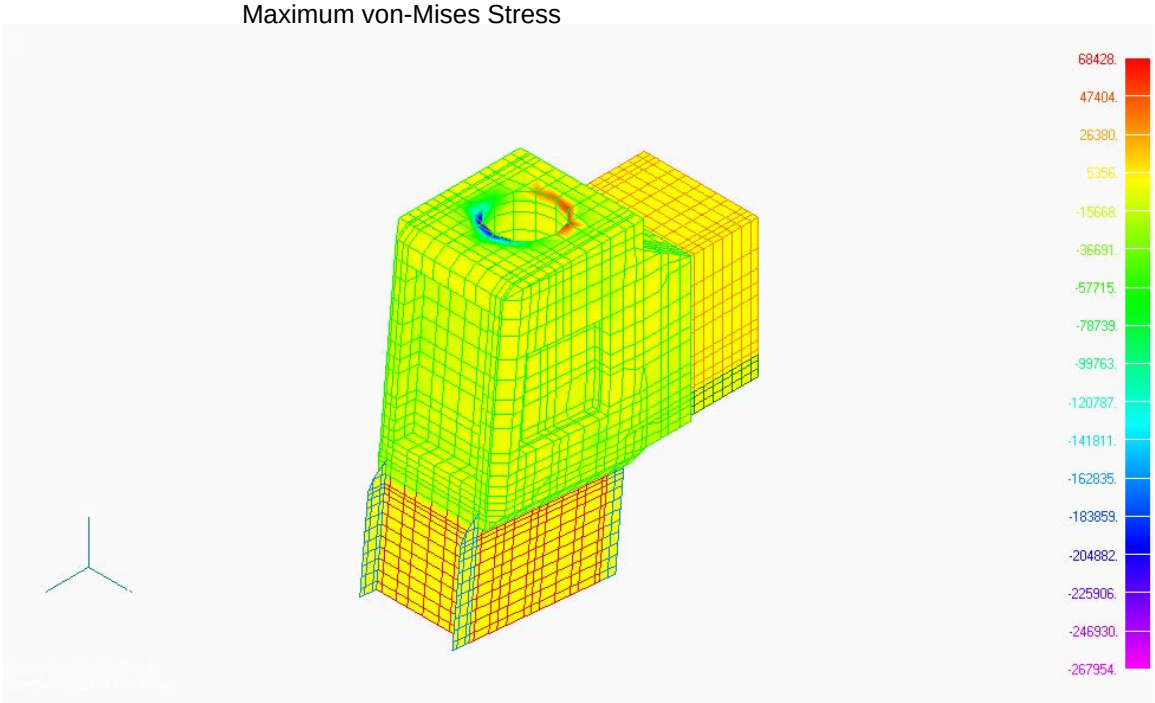

Minimum Principal Stress

Prepared By	Name Brent Dyer	Date 02/22/06	**Engineering and Science Contract Group** *Structural Analysis Section*	File Name silljnt.mcd
Checked By	C. Bala			Drawing No. SDG39135730
Title	USS-02 Sill Joint			

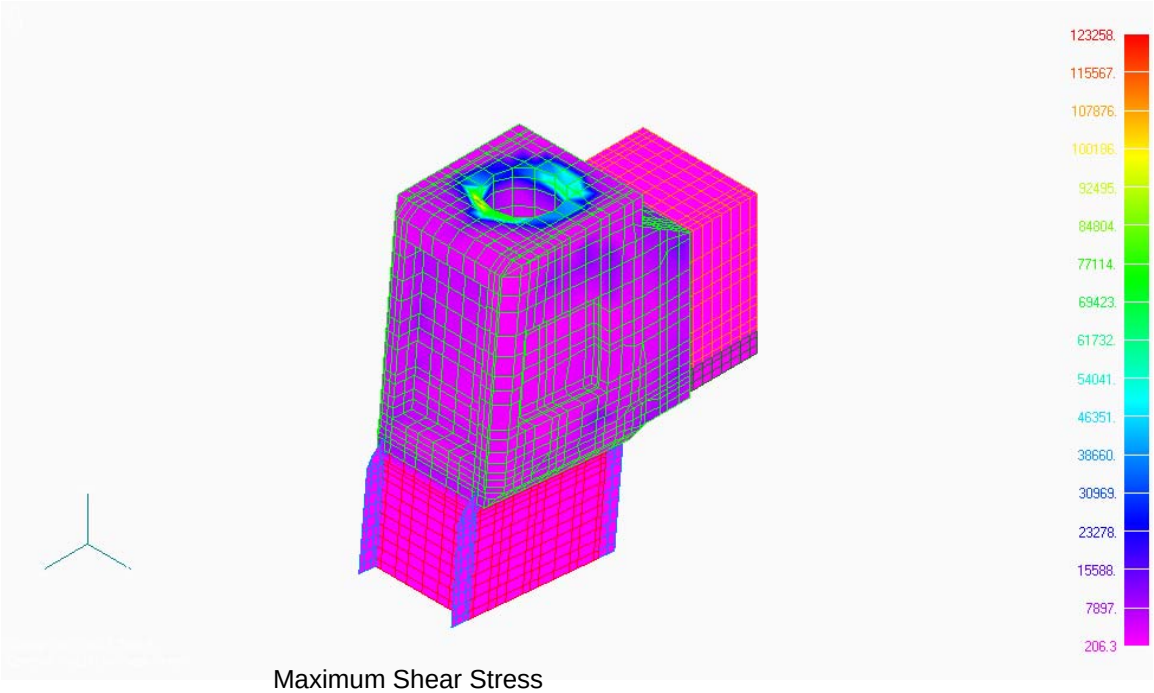

Maximum Shear Stress

High concentrated stresses at the RBE and RSSCON elements were ignored. High stresses due to the Sill trunnion bearing against the Sill Joint socket were also ignored. Therefore, a beam and socket analysis was performed to compare the bearing stress at the outer Sill face to the minimum principle stress from the Sill Joint analysis.

Material: 7050-T7451 Al Plate (Ref. MIL-HDBK-5J, table 3.7.4.0 (b1))

$Fbrua := 107 \cdot 10^3 \cdot psi$ Ultimate Bearing Allowable

$Fbrya := 84 \cdot 10^3 \cdot psi$ Yield Bearing Allowable

Beam and Socket analysis

Vertical load at primary trunnion $Fz := 74247 \cdot lbf$ Ref. AMS-02 model 6-02 Load Case 2016

Horizontal load at primary trunnion $Fx := 36249.7 \cdot lbf$

Max.resultant load $Pr := \sqrt{Fz^2 + Fx^2}$ $Pr = 82623.59\,lbf$

Treating the connection as a Beam in a Socket, as per SMM, Memo 41a

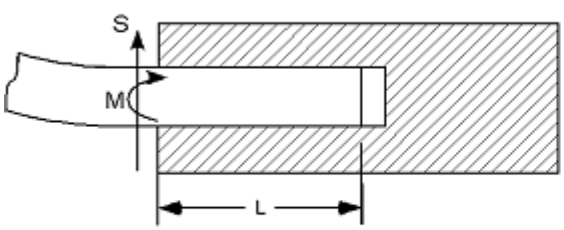

S and M are respectively beam shear in lbf and moment in in-lbf at end of socket. W is unit loading in lbf/in.

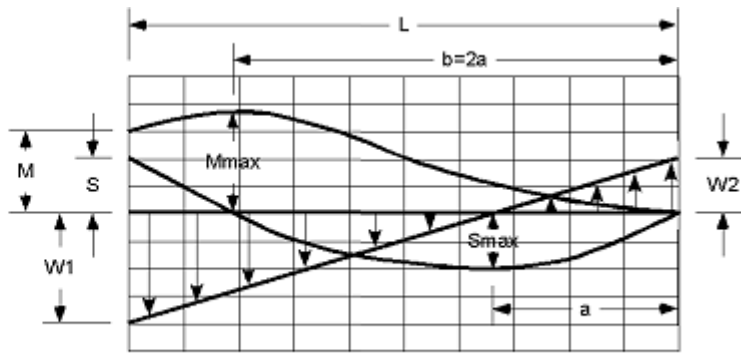

Resultant shear Load $S := Pr$ $S = 82624\,lbf$

Moment at edge of sill joint $M := 0$ $M = 0\,in \cdot lbf$

Length of overlap $L := 6.5 \cdot in$

$slm_ratio := if\left(M = 0, 1000, S \cdot \frac{L}{M}\right)$ $slm_ratio = 1000.000$

$mls_ratio := if\left(S = 0, 1000, \frac{M}{S \cdot L}\right)$ $mls_ratio = 0.000$

Prepared By	Name	Date		File Name
	Brent Dyer	02/22/06	**Engineering and Science Contract Group**	silljnt.mcd
Checked By	C. Bala		*Structural Analysis Section*	Drawing No. SDG39135730
Title	USS-02 Sill Joint			

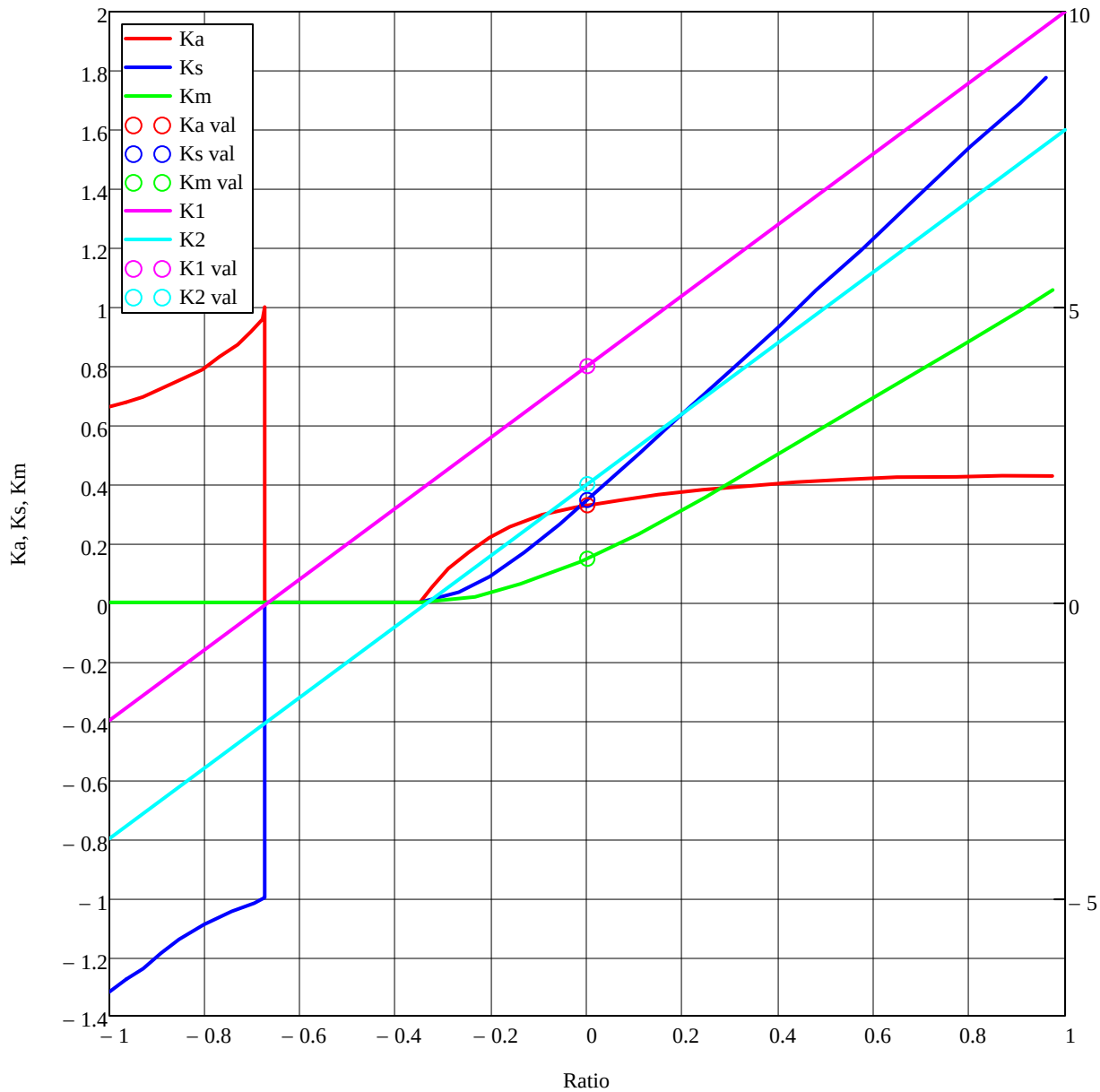

Beam and Socket Coefficients
Note if abs(SL/M) <= 1, Ratio = SL/M, otherwise Ratio = M/SL.

Coefficients are:

Ka = 0.33 Ks = 0.35 Km = 0.15

K1 = 4 K2 = 2

Calculated values are then:

$$w1 := \begin{cases} \dfrac{K1 \cdot M}{L^2} & \text{if } |slm_ratio| \le 1 \\ \dfrac{K1 \cdot S}{L} & \text{otherwise} \end{cases} \qquad w1 = 50845.3 \frac{lbf}{in}$$

$$w2 := \begin{cases} \dfrac{K2 \cdot M}{L^2} & \text{if } |slm_ratio| \le 1 \\ \dfrac{K2 \cdot S}{L} & \text{otherwise} \end{cases} \qquad w2 = 25422.6 \frac{lbf}{in}$$

$$a := Ka \cdot L \qquad a = 2.14\,in$$

Max. shear

$$Smax := \begin{cases} \dfrac{-Ks \cdot M}{L} & \text{if } |slm_ratio| \le 1 \\ -Ks \cdot S & \text{otherwise} \end{cases} \qquad Smax = -28649.1\,lbf$$

Max. Bending moment

$$Mmax := \begin{cases} Km \cdot M & \text{if } |slm_ratio| \le 1 \\ Km \cdot S \cdot L & \text{otherwise} \end{cases} \qquad Mmax = 79144.7\,in \cdot lbf$$

Now check:

$$Sc := \frac{w1 - w2}{2} \cdot L \qquad Sc = 82623.6\,lbf$$

$$Mc := \frac{-w1 + 2 \cdot w2}{6} \cdot L^2 \qquad Mc = 0\,in \cdot lbf$$

Percent error:

$$S_percentdiff := \frac{S - Sc}{S} \qquad S_percentdiff = 0\,\%$$

$$M_percentdiff := \frac{M - Mc}{M} \qquad M_percentdiff = 0\,\%$$

Prepared By	Name	Date		File Name
	Brent Dyer	02/22/06		silljnt.mcd
Checked By	C. Bala		**Engineering and Science Contract Group** *Structural Analysis Section*	Drawing No. SDG39135730
Title	USS-02 Sill Joint			

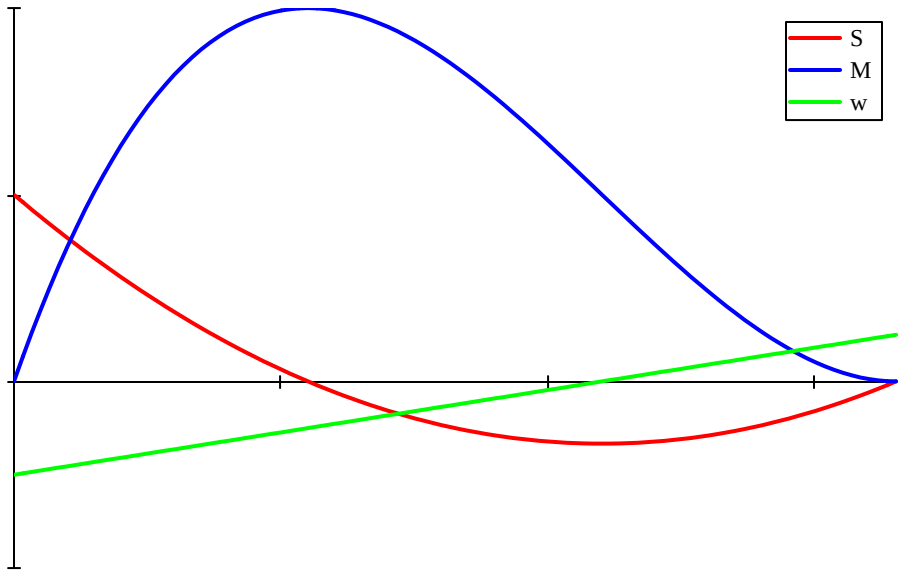

Actual Shear and Moment Distribution Inside Socket

Sill Joint Bearing Stress Calculation

$c := L - a$ $\quad c = 4.364\,in$ Loaded length along machined hole in Sill Joint (from outer face)

$dsmin := 3.2455 \cdot in$ Minimum Diameter of machined hole in Sill Joint

$d := \frac{2}{3} \cdot c$ $\quad d = 2.91\,in$ Bearing length along machined hole in Sill Joint (from outer face)

$Abr := d \cdot (dsmin)$ $\quad Abr = 9.443\,in^2$ Area in compression

$Pbr := \frac{1}{2} \cdot |w1| \cdot c$ $\quad Pbr = 110954.4\,lbf$ Equivalent Compression Load

$\sigma br := \frac{Pbr}{Abr}$ $\quad \sigma br = 11749.8\,psi$ Bearing Stress

Margin of safety

$MSbrult := \frac{Fbrua \cdot \gamma_u}{FS_u \cdot \sigma br} - 1$ $\quad MSbrult = 4.724$ Margin of safety ultimate

$MSbruyld := \frac{Fbrya \cdot \gamma_y}{FS_y \cdot \sigma br} - 1$ $\quad MSbruyld = 5.174$ Margin of safety yield

Summary of Sill Joint FEA analysis

Ref. AMS-02 model 6-02 Load Case 2016

$\sigma uu := 26689.19 \cdot psi$ Ultimate Stress (Load Case 2016, Element 215327, See p. 2.1.3 - 10)

$MS := 0.55$ Ultimate Margin of Safety (Ftu used for ultimate allowable, see p. 2.1.3 - 10)

Conclusion

The bearing stress calculation results in a 44% decrease over the ultimate stress picked out of the FEA model. Notice the margin of safety for the bearing stress calculation uses a higher allowable for bearing.

2.1.4 Sill Pin

Prepared By	Name	Date	Engineering and Science Contract Group	File Name
	Brent Dyer	02/15/06		sillpin.mcd
Checked By	C. Bala		*Structural Analysis Section*	Drawing No. SDG39135731
Title	USS-02 Sill Pin			

Sill Pin Analysis SDG39135731

There are two retaining sill pins, one on each side of the sill block. This prevents the sill trunnion from moving in the Y direction. The pins are made of custom 455 steel in the H1000 condition. The max. axial load in the Y direction is the friction load on the pin. Each pin will be in single shear. The Sill Pin analysis is performed three times, once for each of the following cases; launch, nominal landing, and abort landing.

Material Properties:

Material Custom 455, H1000 bar AMS5617 (Ref. MIL-HDBK-5J, table 2.6.4.0 (b))

$Ftu := 200000 \cdot psi$ $\quad Fty := 185000 \cdot psi$

$Fsu := 124000 \cdot psi$

$Et := 28.9 \cdot 10^6 \cdot psi$ $\quad \omega := 0.28 \cdot \frac{lbf}{in^3}$

Factor of safety, ultimate $\quad FSu := 1.40$

Factor of safety, yield $\quad FSy := 1.10$

Temp. correction factor for ultimate:
(Ref. MIL-HDBK-5J, fig.2.6.4.2.1 and Appendix C2)

Launch Temperatures (40 to 120 F): $c1tu := 0.98$

Abort Landing Temp. (40 to 150 F): $c2tu := 0.97$

Nominal Landing Temp. (-78 to 101 F): $c3tu := 0.99$

Geometry:

Diameter of sill pin $\quad D := 0.2470 \cdot in$

Shear area of each pin $\quad As := \frac{\pi \cdot D^2}{4}$ $\quad As = 0.04792\, in^2$

Loads :
(Ref. section 2.1.5 - Sill Trunnion and Appendix A2 for NASPOST sort)

Launch Case:

Vertical load at primary trunnion $\quad Fzl := 35897.98 \cdot lbf$ $\quad$ (Ref.AMS-02, loads model 2-04, Load case 1016, element ID 1, data file: maxtrunnionforces1000.lis)

Horizontal load at primary trunnion $\quad Fxl := 27569.3 \cdot lbf$

Max.resultant load $\quad Prl := \sqrt{Fzl^2 + Fxl^2}$ $\quad Prl = 45263\, lbf$

Friction load (10% of load) $\quad Pfl := Prl \cdot 0.100$ $\quad Pfl = 4526.3\, lbf$

Abort Landing Case:

Vertical load at primary trunnion $Fza := 42137.67 \cdot lbf$

Horizontal load at primary trunnion $Fxa := 9960.34 \cdot lbf$

(Ref.AMS-02, loads model 2-04, Load case 2016, element ID 1, data file: maxtrunnionforces2000.lis)

Max.resultant load $Pra := \sqrt{Fza^2 + Fxa^2}$ $Pra = 43299\,lbf$

Friction load (10% of load) $Pfa := Pra \cdot 0.100$ $Pfa = 4329.9\,lbf$

Nominal Landing Case:

Vertical load at primary trunnion $Fzn := 53777 \cdot lbf$

Horizontal load at primary trunnion $Fxn := 14600 \cdot lbf$

(Ref.AMS-02, loads model 2-04, Load case 4016, element ID 1, data file: maxtrunnionforces4000.lis)

Max.resultant load $Prn := \sqrt{Fzn^2 + Fxn^2}$ $Prn = 55724\,lbf$

Friction load (10% of load) $Pfn := Prn \cdot 0.100$ $Pfn = 5572.4\,lbf$

Shear Stress and Margin of Safety Calculations:

Launch Case:

Max. load in the Y direction $Pfl = 4526\,lbf$

Shear stress in each pin $\tau l := \frac{Pfl}{2 \cdot As}$ $\tau l = 47231\,psi$

(Note that the load is divided by 2 since there are 2 pins. each pin is in single shear)

Margin of safety $MSl := \frac{Fsu \cdot c1tu}{\tau l \cdot FSu} - 1$ $MSl = 0.84$

Abort Landing Case:

Max. load in the Y direction $Pfa = 4330\,lbf$

Shear stress in each pin $\tau a := \frac{Pfa}{2 \cdot As}$ $\tau a = 45182\,psi$

(Note that the load is divided by 2 since there are 2 pins. each pin is in single shear)

Margin of safety $MSa := \frac{Fsu \cdot c2tu}{\tau a \cdot FSu} - 1$ $MSa = 0.90$

Nominal Landing Case:

Max. load in the Y direction $Pfn = 5572\,lbf$

Shear stress in each pin $\tau n := \frac{Pfn}{2 \cdot As}$ $\tau n = 58147\,psi$ (Note that the load is divided by 2 since there are 2 pins. each pin is in single shear)

Margin of safety $MSn := \frac{Fsu \cdot c3tu}{\tau n \cdot FSu} - 1$ $MSn = 0.51$

2.1.5 Sill Trunnion

Prepared By	Name	Date		File Name
	Brent Dyer	02/13/06	**Engineering and Science Contract Group**	sill_trunnion.mcd
Checked By	C. Bala		*Structural Analysis Section*	Drawing No. SDG39135732
Title	USS-02 Sill Trunnion			

USS-02 Sill Trunnion Analysis

The objective of this analysis is to demonstrate the structural strength of the **Sill Trunnion (SDG39135732)**. This analysis covers the primary and secondary trunnions, both are the same geometry except for the loads in the secondary trunnions are smaller than the primary trunnions. The difference in minimum temperature (for launch, abort landing, and nominal landing) can change the friction coefficient and therefore affects the axial load in the trunnion. The Sill Trunnion analysis is performed three times, once for each of the following cases; launch, nominal landing, and abort landing.

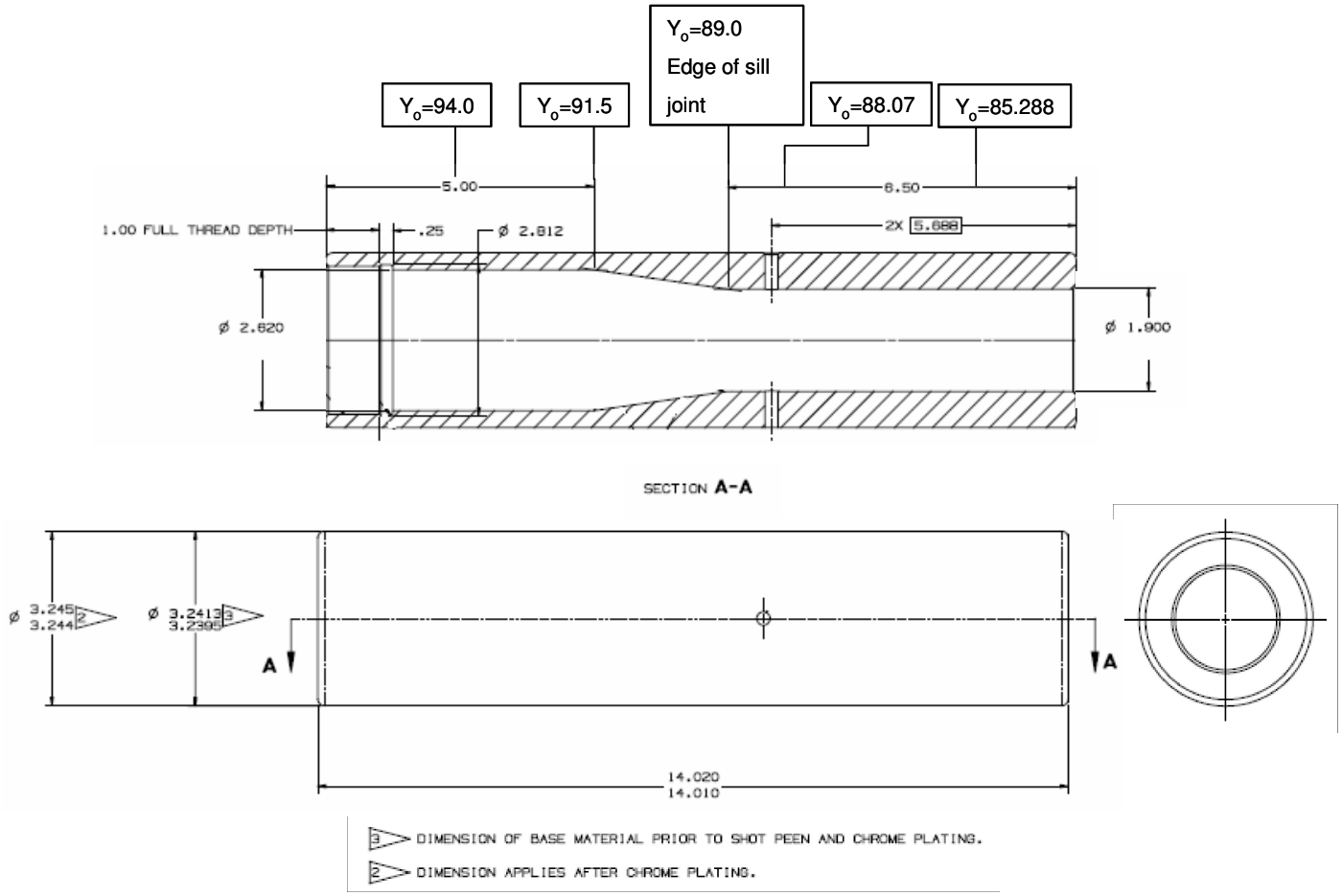

USS-02 Sill Trunnion - SDG39135732

Prepared By	Name	Date	Engineering and Science Contract Group	File Name
	Brent Dyer	02/13/06		sill_trunnion.mcd
Checked By	C. Bala		*Structural Analysis Section*	Drawing No. SDG39135732
Title	USS-02 Sill Trunnion			

Material Properties:

Material Custom 455, H1000 bar AMS5617 (Ref. MIL-HDBK-5J, table 2.6.4.0 (b))

$Ftu := 200 \cdot 10^3 \cdot psi$ $Fty := 185 \cdot 10^3 \cdot psi$

$Fsu := 124 \cdot 10^3 \cdot psi$

$Fbru := 409 \cdot 10^3 \cdot psi$ $Fbry := 343 \cdot 10^3 \cdot psi$

$Et := 28.9 \cdot 10^6 \cdot psi$ $\beta := 0.28 \cdot \frac{lbf}{in^3}$

Factor of safety, ultimate $FSu := 1.40$

Factor of safety, yield $FSy := 1.10$

Temp. correction factor, ult & yield:
(Ref. MIL-HDBK-5J, fig.2.6.4.2.1 and Appendix C2)

Launch Temperatures (40 to 120 F): $c1tu := 0.98$ $c1ty := .98$

Abort Landing Temp. (40 to 150 F): $c2tu := 0.97$ $c2ty := .97$

Nominal Landing Temp. (-78 to 101 F): $c3tu := 0.99$ $c3ty := .99$

Geometry:

Section at edge of trunnion joint Y=89.0

Max. outer dia. of trunnion $dtmax := 3.2413 \cdot in$ (Ref. drawing SDG39135732)

Min.outer diameter of trunnion $dto := 3.2395 \cdot in$

Inner diameter of trunnion at y=89.0 $dt89 := 1.90 \cdot in + 0.005 \cdot in$ $dt89 = 1.905 \cdot in$

Area of cross-section $As := \frac{u \cdot (dto^2 - dt89^2)}{4}$ $As = 5.392 \cdot in^2$

Moment of inertia $Is := \frac{u \cdot (dto^4 - dt89^4)}{64}$ $Is = 4.76 \cdot in^4$

Section at Y=91.5

Inner diameter of trunnion at y=91.5 $dti := 2.62 \cdot in + 0.005 \cdot in$ $dti = 2.625 \cdot in$ (Ref. drawing SDG39135732)

Area of cross-section $As1 := \frac{u \cdot (dto^2 - dti^2)}{4}$ $As1 = 2.83 \cdot in^2$

Moment of inertia $Is1 := \frac{u \cdot (dto^4 - dti^4)}{64}$ $Is1 = 3.075 \cdot in^4$

Loads:

The following NASPOST results were sorted for maximum forces in the x and z-directions for all trunnions. The sill trunnions have element IDs 1, 2, 3, and 4 in loads model 2-04 (Ref. Appendix A2 for NASPOST sort):

+++ MAX MAG X AND Z LAUNCH TRUNNION FORCES +++

ID	SUBCASE	FX	FY	FZ
1	1016	-2.756930E+04	0.000000E+00	3.589798E+04
2	1005	-3.181006E+04	0.000000E+00	-1.396226E+04
3	1019	0.000000E+00	0.000000E+00	-2.870820E+04
4	1057	0.000000E+00	0.000000E+00	1.901807E+04

+++ MAX MAG X AND Z ABORT LANDING TRUNNION FORCES +++

ID	SUBCASE	FX	FY	FZ
1	2016	-9.960342E+03	0.000000E+00	4.213767E+04
4	2057	0.000000E+00	0.000000E+00	3.674517E+04
2	2027	-1.024253E+04	0.000000E+00	2.806803E+04
3	2019	0.000000E+00	0.000000E+00	-2.549099E+04

+++ MAX MAG Y AND Z NOMLANDING TRUNNION FORCES +++

ID	SUBCASE	FX	FY	FZ
1	4016	-1.460043E+04	0.000000E+00	5.377654E+04
4	4057	0.000000E+00	0.000000E+00	4.746577E+04
2	4027	-1.484633E+04	0.000000E+00	4.003153E+04
3	4046	0.000000E+00	0.000000E+00	3.591928E+04

Launch Case:

Vertical load at primary trunnion $Fz := 35897.98 \cdot lbf$

Horizontal load at primary trunnion $Fx := 27569.3 \cdot lbf$

(Ref.AMS-02, loads model 2-04, Load case 1016, element ID 1, data file: maxtrunnionforces1000.lis)

Max.resultant load $Pr := \sqrt{Fz^2 + Fx^2}$ $Pr = 45263 \cdot lbf$

The tolerances between the sill trunnion and the sill joint are tight. Due to this tight tolerance, any side load transferred through the sill trunnion is reacted by the sill joint.

Moment arm from load to edge of sill plate $d2 := (94.0 \cdot in - 89.0 \cdot in) + 0.5 \cdot in$ $d2 = 5.5 \cdot in$

(Ref. Appendix C6 for the 0.5" dynamic excursion)

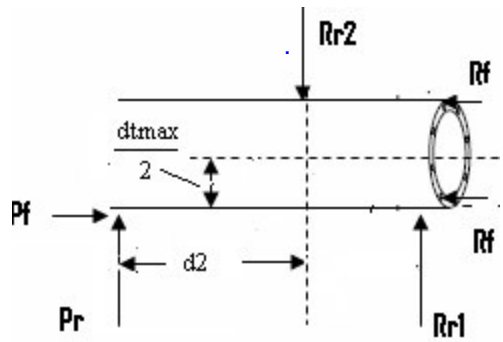

Max.bending moment at edge of sill plate $Mb := Pr \cdot d2$

$Mb = 248946 \cdot in \cdot lbf$

Friction coefficient is assessed based on Figure 4.1.1.1-1 of NSTS-21000-IDD-ISS, Ref. Appendix C7.

$P := Pr$ $P = 45263\ lbf$

$T := 40 \cdot deg$ (It is conservative to use the minimum temperature (Ref. Appendix C2))

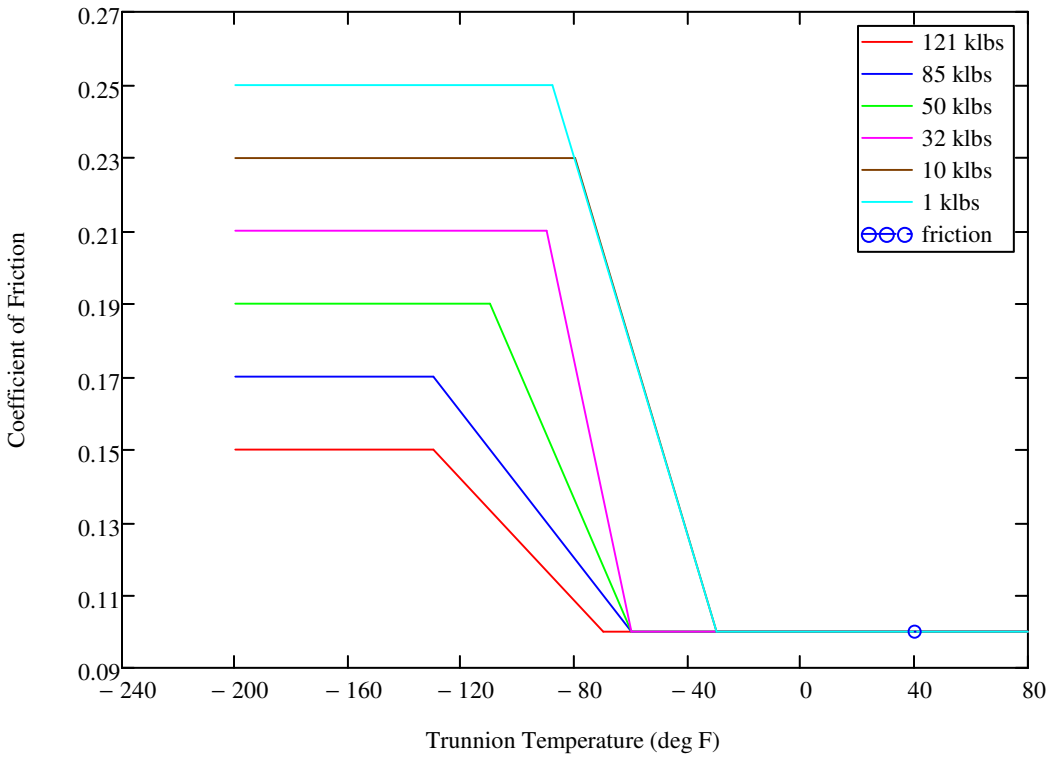

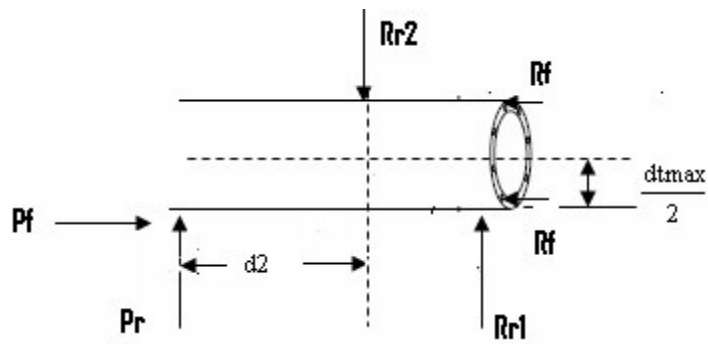

Friction coefficient $= 0.100$

Friction load (10% of load) $Pf := Pr\cdot$ $Pf = 4526.3\cdot lbf$

Friction moment $Mf := Pf\cdot\frac{dtmax}{2}$ $Mf = 7335.5\cdot in\cdot lbf$

Total moment $M := Mb + Mf$ $M = 256281.6\cdot in\cdot lbf$

Applied limit stress in shaft $=l := \left(M\cdot\frac{dtmax}{2\cdot Is}\right)$ $=l = 87264.2\cdot psi$

Plastic bending allowable (Ref.NASA TM X-73305,sect B.4.5)

Section factor

Outer radius $ro := \frac{dto}{2}$ $ro = 1.62\cdot in$

Inner radius $ri := \frac{dt89}{2}$ $ri = 0.953\cdot in$

Area of semicircular segment $Ase := \frac{u}{2}\cdot\left(ro^2 - ri^2\right)$ $Ase = 2.696\cdot in^2$

Distance of neutral axis from center line $ybar := \frac{4}{3\cdot u}\cdot\left(\frac{ro^3 - ri^3}{ro^2 - ri^2}\right)$ $ybar = 0.837\cdot in$

First moment of area $Q := Ase\cdot ybar$ $Q = 2.257\cdot in^3$

Distance of extreme fiber from centerline of shaft $c := \frac{dtmax}{2}$ $c = 1.621 \cdot in$

Section factor $K := \frac{2 \cdot Q \cdot c}{Is}$ $K = 1.537$

Allowable bending modulus of rupture ult. $=p := 301000 \cdot psi$ (Ref.NASA TM X-73305,sect B.4.5 fig. B4.5.5.2-7)

Allowable bending modulus of rupture yld. $=y := 210000 \cdot psi$

Check

Section factor $K := 1.698 \cdot \frac{ro \cdot \left(ro^3 - ri^3\right)}{ro^4 - ri^4}$ $K = 1.5364$ (Ref. Formulas for Stress, Strain, and Structural Matrices, Table 2-2, Case 6)

$fmu := 200000 \cdot psi$ $fou := 192000 \cdot psi$ (Ref. Bruhn, table C3.2 page C3.11)

$fmy := 176000 \cdot psi$ $foy := 65000 \cdot psi$

$Fbu := fmu + fou \cdot (K - 1)$ $Fbu = 302996 \cdot psi$ (Ref. Bruhn page C3.3, equation 3)

$Fby := fmy + foy \cdot (K - 1)$ $Fby = 210868.4 \cdot psi$ (These numbers match the σp and σy closely)

Axial tension stress $=a := \frac{Pf}{As}$ $=a = 839 \cdot psi$

Shear stress $y := \frac{Pr}{As}$ $y = 8394 \cdot psi$

Stress ratios, Ultimate

Stress ratio in axial, ultimate $Rau := \frac{=a \cdot FSu}{Ftu \cdot c1tu}$ $Rau = 0.006$

Stress ratio in bending, ultimate $Rbu := \frac{=l \cdot FSu}{Fbu \cdot c1tu}$ $Rbu = 0.411$

Stress ratio in shear, ultimate $Rsu := \frac{y \cdot FSu}{Fsu \cdot c1tu}$ $Rsu = 0.097$

Margin of safety ultimate $MSu := \frac{1}{\sqrt{(Rau + Rbu)^2 + Rsu^2}} - 1$ $MSu = 1.33$

Stress ratios, Yield

Stress ratio in axial, yield $Ray := \frac{=a \cdot FSy}{Fty \cdot c1ty}$ $Ray = 0.005$

Stress ratio in bending, yield $Rby := \frac{=l \cdot FSy}{Fby \cdot c1ty}$ $Rby = 0.465$

Stress ratio in shear, yield $Rsy := \frac{y \cdot FSy}{0.5Fty \cdot c1ty}$ $Rsy = 0.102$

Margin of safety, yield $MSy := \frac{1}{\sqrt{(Ray + Rby)^2 + Rsy^2}} - 1$ $MSy = 1.08$

Check section at Y=91.5

Total Moment at Y=91.5 $M1 := Pr \cdot (94.0 \cdot in - 91.5 \cdot in + 0.5 \cdot in) + Mf$ $M1 = 143124.3 \cdot in \cdot lbf$

(Ref. Appendix C6 for the 0.5" dynamic excursion)

Applied limit stress in shaft $=l1 := \left(M1 \cdot \frac{dtmax}{2 \cdot Is1}\right)$ $=l1 = 75423.3 \cdot psi$

Plastic bending allowable (Ref.NASA TM X-73305,sect B.4.5)

Section factor

Outer radius $ro := \frac{dto}{2}$ $ro = 1.62 \cdot in$

Inner radius $ri := \frac{dti}{2}$ $ri = 1.313 \cdot in$

Area of semicircular segment $Ase := \frac{u}{2} \cdot \left(ro^2 - ri^2\right)$ $Ase = 1.415 \cdot in^2$

Distance of neutral axis from center line $ybar := \frac{4}{3 \cdot u} \cdot \left(\frac{ro^3 - ri^3}{ro^2 - ri^2}\right)$ $ybar = 0.937 \cdot in$

First moment of area $Q := Ase \cdot ybar$ $Q = 1.326 \cdot in^3$

Distance of extreme fiber from centerline of shaft $c := \frac{dtmax}{2}$ $c = 1.62 \cdot in$

Section factor $K := \frac{2 \cdot Q \cdot c}{Is1}$ $K = 1.3972$

Allowable bending modulus of rupture ult. $=p1 := 274000 \cdot psi$ (Ref.NASA TM X-73305,sect B.4.5 fig. B4.5.5.2-7)

Allowable bending modulus of rupture yld. $=y1 := 200000 \cdot psi$

Check

Section factor $K := 1.698 \cdot \frac{ro \cdot (ro^3 - ri^3)}{ro^4 - ri^4}$ $K = 1.3968$ (Ref. Formulas for Stress, Strain, and Structural Matrices, Table 2-2, Case 6)

$fmu := 200000 \cdot psi$ $fou := 192000 \cdot psi$ (Ref. Bruhn, table C3.2 page C3.11)

$fmy := 176000 \cdot psi$ $foy := 65000 \cdot psi$

$Fbu1 := fmu + fou \cdot (K - 1)$ $Fbu1 = 276176.9 \cdot psi$ (Ref. Bruhn page C3.3, equation 3)

$Fby1 := fmy + foy \cdot (K - 1)$ $Fby1 = 201789.1 \cdot psi$ (These numbers match the σp1 and σy1 closely)

Axial tension stress $=a1 := \frac{Pf}{As1}$ $=a1 = 1599.2 \cdot psi$

Shear stress $y1 := \frac{Pr}{As1}$ $y1 = 15992 \cdot psi$

Stress ratios, Ultimate

Stress ratio in axial, ultimate $Rau1 := \frac{=a1 \cdot FSu}{Ftu \cdot c1tu}$ $Rau = 0.006$

Stress ratio in bending, ultimate $Rbu1 := \frac{=l1 \cdot FSu}{Fbu1 \cdot c1tu}$ $Rbu = 0.411$

Stress ratio in shear, ultimate $Rsu1 := \frac{y1 \cdot FSu}{Fsu \cdot c1tu}$ $Rsu = 0.097$

Margin of safety ultimate $MSu := \frac{1}{\sqrt{(Rau1 + Rbu1)^2 + Rsu1^2}} - 1$ $MSu = 1.26$

Stress ratios, Yield

Stress ratio in axial, yield $\quad Ray1 := \frac{=a1 \cdot FSy}{Fty \cdot c1ty} \qquad Ray1 = 0.01$

Stress ratio in bending, yield $\quad Rby1 := \frac{=l1 \cdot FSy}{Fby1 \cdot c1ty} \qquad Rby1 = 0.42$

Stress ratio in shear, yield $\quad Rsy1 := \frac{y1 \cdot FSy}{0.5 \cdot Fty \cdot c1ty} \qquad Rsy1 = 0.194$

Margin of safety yield $\quad MSy := \frac{1}{\sqrt{(Ray1 + Rby1)^2 + Rsy1^2}} - 1 \qquad MSy = 1.12$

Beam and Socket analysis - Launch Case

Treating the connection as a Beam in a Socket, as per SMM, Memo 41a

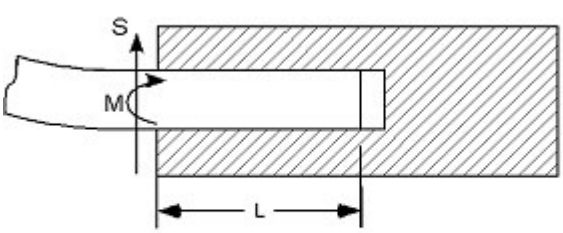

S and M are respectively beam shear in lbf and moment in in-lbf at end of socket. W is unit loading in lbf/in.

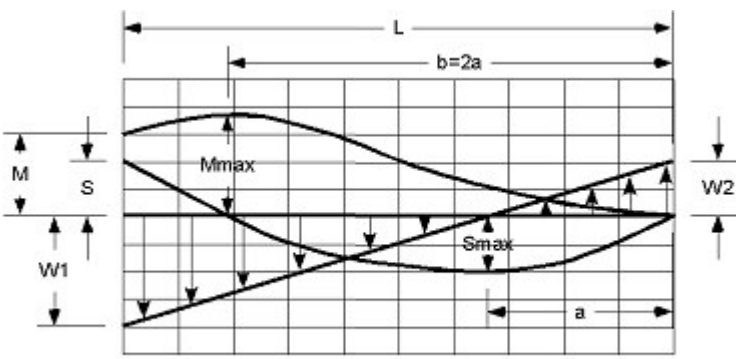

Resultant shear Load $\quad S := Pr \qquad S = 45263 \cdot lbf$

Moment at edge of sill joint $\quad M := Mb + Mf \qquad M = 256282 \cdot in \cdot lbf$

Length of overlap $\quad L := 6.5 \cdot in$

$$slm_ratio := if\left(M = 0, 1000, S \cdot \frac{L}{M}\right) \qquad slm_ratio = 1.148$$

$$mls_ratio := if\left(S = 0, 1000, \frac{M}{S \cdot L}\right) \qquad mls_ratio = 0.871$$

Prepared By	Name	Date		File Name
	Brent Dyer	02/13/06		sill_trunnion.mcd
Checked By	C. Bala		**Engineering and Science Contract Group** *Structural Analysis Section*	Drawing No. SDG39135732
Title	USS-02 Sill Trunnion			

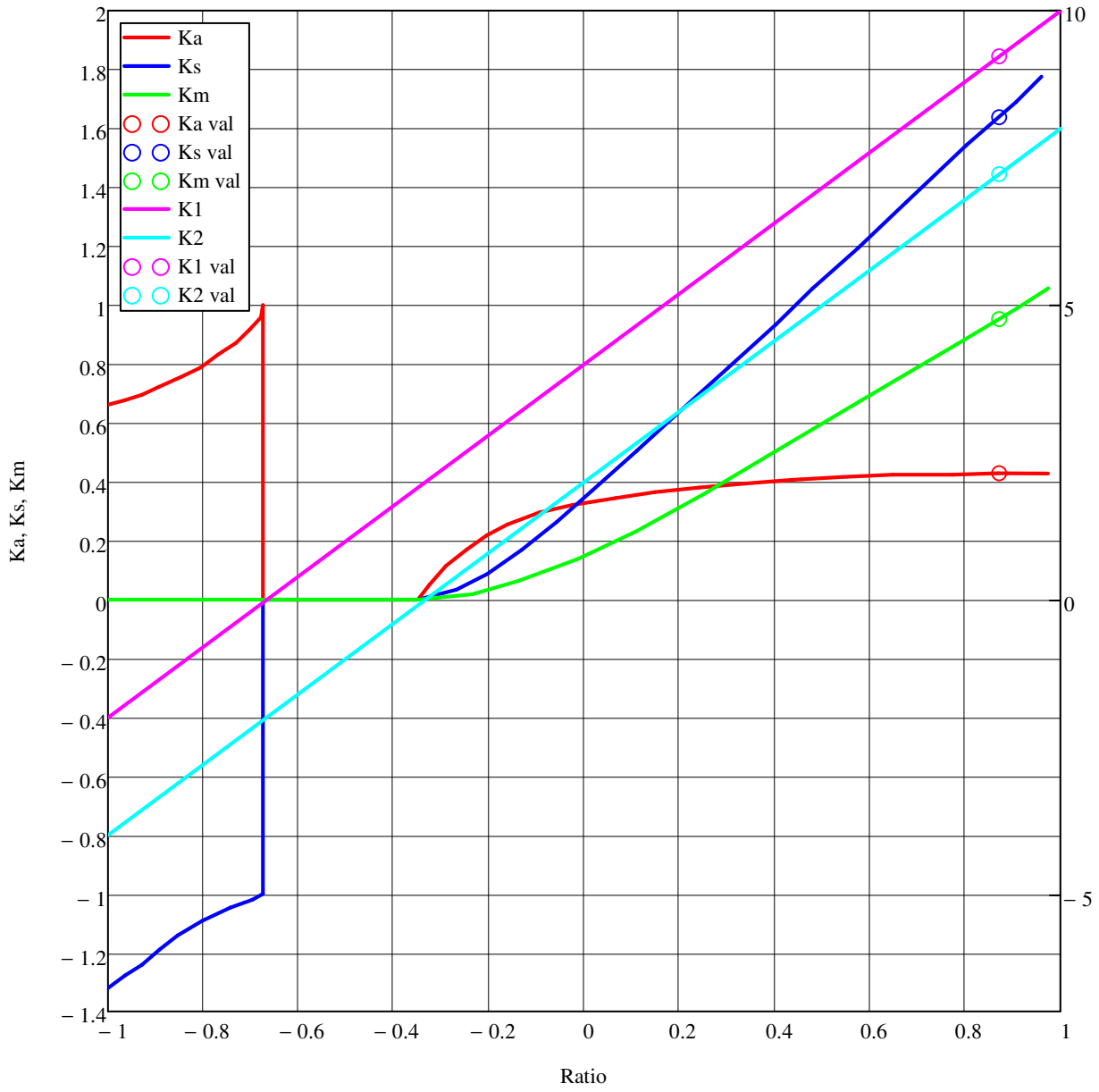

Beam and Socket Coefficients
Note if abs(SL/M) <= 1, Ratio = SL/M, otherwise Ratio = M/SL.

Coefficients are:

Ka = 0.43 Ks = 1.64 Km = 0.95

K1 = 9.23 K2 = 7.23

Calculated values are then:

$$w1 := \begin{cases} \dfrac{K1 \cdot M}{L^2} & \text{if } |slm_ratio| \le 1 \\ \dfrac{K1 \cdot S}{L} & \text{otherwise} \end{cases} \qquad w1 = 64249.1 \cdot \frac{lbf}{in}$$

$$w2 := \begin{cases} \dfrac{K2 \cdot M}{L^2} & \text{if } |slm_ratio| \le 1 \\ \dfrac{K2 \cdot S}{L} & \text{otherwise} \end{cases} \qquad w2 = 50322.1 \cdot \frac{lbf}{in}$$

$$a := Ka \cdot L \qquad a = 2.79 \cdot in$$

Max. shear

$$Smax := \begin{cases} \dfrac{-Ks \cdot M}{L} & \text{if } |slm_ratio| \le 1 \\ -Ks \cdot S & \text{otherwise} \end{cases} \qquad Smax = -74174.3 \cdot lbf$$

Max. Bending moment

$$Mmax := \begin{cases} Km \cdot M & \text{if } |slm_ratio| \le 1 \\ Km \cdot S \cdot L & \text{otherwise} \end{cases} \qquad Mmax = 280254.5 \cdot in \cdot lbf$$

Now check:

$$Sc := \frac{w1 - w2}{2} \cdot L \qquad Sc = 45262.9 \cdot lbf$$

$$Mc := \frac{-w1 + 2 \cdot w2}{6} \cdot L^2 \qquad Mc = 256281.6 \cdot in \cdot lbf$$

Percent error:

$$S_percentdiff := \frac{S - Sc}{S} \qquad S_percentdiff = 0 \cdot \%$$

$$M_percentdiff := \frac{M - Mc}{M} \qquad M_percentdiff = -0 \cdot \%$$

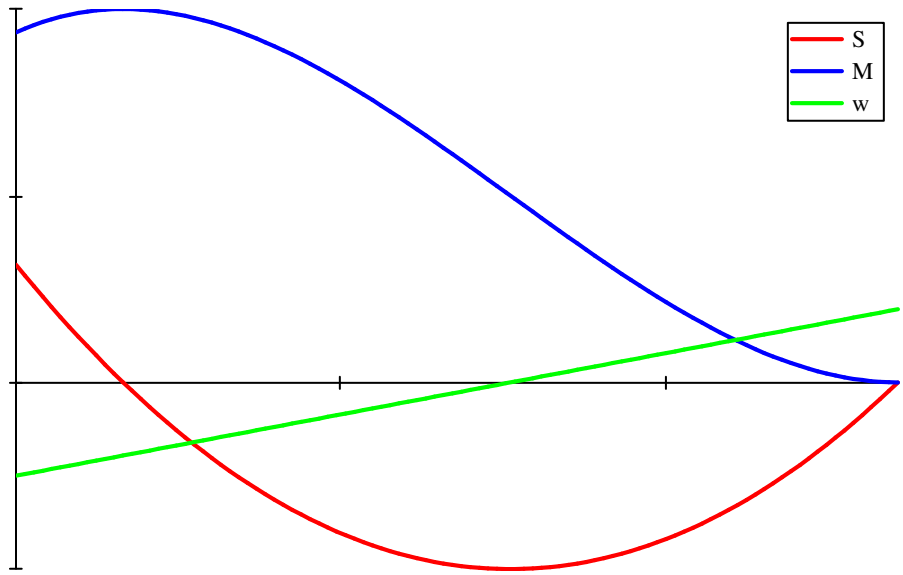

Actual Shear and Moment Distribution Inside Socket

Case 1: Max. bending moment at Y=88.075 - Launch Case

Max. moment occurs at b=2a from inner end $b := 2 \cdot a$ $b = 5.575 \cdot in$ (Y=88.075)

Shear $S := 0 \cdot lbf$ Max. Bending moment $Mmax = 280254.5 \cdot in \cdot lbf$

Section properties at 5.575 in from inner end y=88.075

Inner diameter of trunnion at y=88.075 $dt8807 := 1.9 \cdot in + 0.005 \cdot in$ $dt8807 = 1.905 \cdot in$

Area of cross-section at 88.075 $As := \frac{u \cdot \left(dto^2 - dt8807^2\right)}{4}$ $As = 5.392 \cdot in^2$

Moment of inertia at 88.075 $Is := \frac{u \cdot \left(dto^4 - dt8807^4\right)}{64}$ $Is = 4.76 \cdot in^4$

Section modulus $S1 := \frac{Is}{\frac{dtmax}{2}}$ $S1 = 2.937 \cdot in^3$

Total moment $M8807 := Mmax$ $M8807 = 280254.5 \cdot in \cdot lbf$

Combined Tensile stress $=8807 := \frac{M8807}{S1}$ $=8807 = 95427 \cdot psi$

Shear stress $y8807 := \frac{S}{As}$ $y8807 = 0 \cdot psi$

Stress Ratios

Axial (ult) $Rau := \frac{=a \cdot FSu}{Ftu \cdot c1tu}$ $Rau = 0.006$

Bending(ult) $Rbu := \frac{FSu \cdot =8807}{Fbu \cdot c1tu}$ $Rbu = 0.450$

Shear(ult) $Rsu := \frac{FSu \cdot y8807}{Fsu \cdot c1tu}$ $Rsu = 0.000$

Axial (yld) $Ray := \frac{=a \cdot FSy}{Fty \cdot c1ty}$ $Ray = 0.005$

Bending(yld) $Rby := \frac{FSy \cdot =8807}{Fby \cdot c1ty}$ $Rby = 0.508$

Shear(yld) $Rsy := \frac{FSy \cdot y8807}{0.50Fty \cdot c1ty}$ $Rsy = 0.000$

Margin of safety

Margin of safety ultimate $MSu := \frac{1}{\sqrt{(Rau + Rbu)^2 + Rsu^2}} - 1$ $MSu = 1.19$

Margin of safety yield $MSy := \frac{1}{\sqrt{(Ray + Rby)^2 + Rsy^2}} - 1$ $MSy = 0.949$

Case 2 Max.shear at Y=85.288 - Launch Case

When shear is maximum the bending moment is 0.41 of Mmax

Max.shear $Smax = -74174 \cdot lbf$

Bending moment $Ms := 0.41 \cdot Mmax$ $Ms = 114904.3 \cdot in \cdot lbf$

Max. shear occurs at a from inner end $a = 2.788 \cdot in$ (Y=85.288)

Section properties at 2.788 in from inner end y=85.288 Max.shear location

inner diameter at Y=85.288 $dt8528 := 1.9 \cdot in + 0.03 \cdot in$ $dt8528 = 1.93 \cdot in$

Wall thickness at y=85.288 $wt8528 := \frac{dto - dt8528}{2}$ $wt8528 = 0.655 \cdot in$

Area of cross-section at 85.288 $As := \frac{u \cdot \left(dto^2 - dt8528^2\right)}{4}$ $As = 5.317 \cdot in^2$

Moment of inertia at 85.288 $Is := \frac{u \cdot \left(dto^4 - dt8528^4\right)}{64}$ $Is = 4.725 \cdot in^4$

Section modulus $S1 := \frac{Is}{\frac{dtmax}{2}}$ $S1 = 2.915 \cdot in^3$

Total moment $M8528 := Ms$ $M8528 = 114904.3 \cdot in \cdot lbf$

Tensile stress $=8528 := \frac{M8528}{S1}$ $=8528 = 39411.7 \cdot psi$

Shear stress $y8528 := \left(\frac{|Smax|}{As}\right)$ $y8528 = 13951.1 \cdot psi$

Stress Ratios

Axial (ult) $Rau := \frac{=a \cdot FSu}{Ftu \cdot c1tu}$ $Rau = 0.006$

Bending(ult) $Rbu := \frac{FSu \cdot =8528}{Fbu \cdot c1tu}$ $Rbu = 0.186$

Shear(ult) $Rsu := \frac{FSu \cdot y8528}{Fsu \cdot c1tu}$ $Rsu = 0.161$

Axial (yld) $Ray := \frac{=a \cdot FSy}{Fty \cdot c1ty}$ $Ray = 0.005$

Bending(yld) $Rby := \frac{FSy \cdot =8528}{Fby \cdot c1ty}$ $Rby = 0.21$

Shear(yld) $Rsy := \frac{FSy \cdot y8528}{0.50Fty \cdot c1ty}$ $Rsy = 0.169$

Margin of safety

Margin of safety ultimate $MSu := \frac{1}{\sqrt{(Rau + Rbu)^2 + Rsu^2}} - 1$ $MSu = 3$

Margin of safety yield $MSy := \frac{1}{\sqrt{(Ray + Rby)^2 + Rsy^2}} - 1$ $MSy = 2.66$

Case 3 **At edge of socket Y=89.0 - Launch Case**

Moment $M890 := 0.82 \cdot Mmax$ $M890 = 229808.7 \cdot in \cdot lbf$

Shear $S890 := 0.75 \cdot Smax$ $S890 = -55630.7 \cdot lbf$

Section properties at y=89.0

Area of cross-section $As := \frac{u \cdot \left(dto^2 - dt89^2\right)}{4}$ $As = 5.392 \cdot in^2$

Moment of inertia $Is := \frac{u \cdot \left(dto^4 - dt89^4\right)}{64}$ $Is = 4.76 \cdot in^4$

Section modulus $S1 := \frac{Is}{\frac{dtmax}{2}}$ $S1 = 2.937 \cdot in^3$

Combined bending stress $=890 := \frac{M890}{S1}$ $=890 = 78250.2 \cdot psi$

Shear stress $y890 := \frac{|S890|}{As}$ $y890 = 10317.2 \cdot psi$

Stress Ratios

Axial (ult) $Rau := \frac{=a \cdot FSu}{Ftu \cdot c1tu}$ $Rau = 0.006$

Bending(ult) $Rbu := \frac{FSu \cdot =890}{Fbu \cdot c1tu}$ $Rbu = 0.369$

Shear(ult) $Rs := \frac{FSu \cdot y890}{Fsu \cdot c1tu}$ $Rs = 0.119$

Axial (yld) $Ray := \frac{=a \cdot FSy}{Fty \cdot c1ty}$ $Ray = 0.005$

Bending(yld) $Rby := \frac{FSy \cdot =890}{Fby \cdot c1ty}$ $Rby = 0.417$

Shear(yld) $Rsy := \frac{FSy \cdot y890}{0.50Fty \cdot c1ty}$ $Rsy = 0.125$

Margin of safety $MSult := \frac{1}{\sqrt{Rbu^2 + Rs^2}} - 1$ $MSult = 1.58$

$MSyld := \frac{1}{\sqrt{Rby^2 + Rsy^2}} - 1$ $MSyld = 1.3$

Abort Landing Case:

Vertical load at primary trunnion $Fz := 42137.67 \cdot lbf$

Horizontal load at primary trunnion $Fx := 9960.34 \cdot lbf$

(Ref.AMS-02, loads model 2-04, Load case 2016, element ID 1, data file: maxtrunnionforces2000.lis)

Max.resultant load $Pr := \sqrt{Fz^2 + Fx^2}$ $Pr = 43299 \cdot lbf$

The tolerances between the sill trunnion and the sill joint are tight. Due to this tight tolerance, any side load transferred through the sill trunnion is reacted by the sill joint.

Moment arm from load to edge of sill plate $d2 := (94.0 \cdot in - 89.0 \cdot in) + 0.5 \cdot in$ $d2 = 5.5 \cdot in$

(Ref. Appendix C6 for the 0.5" dynamic excursion)

Max.bending moment at edge of sill plate $Mb := Pr \cdot d2$

$Mb = 238143.8 \cdot in \cdot lbf$

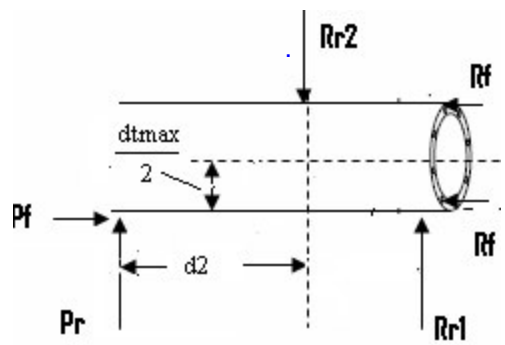

Friction coefficient is assessed based on Figure 4.1.1.1-1 of NSTS-21000-IDD-ISS, Ref. Appendix C7.

$P := Pr$ $P = 43299\ lbf$

$T := 40 \cdot deg$ (It is conservative to use the minimum temperature (Ref. Appendix C2))

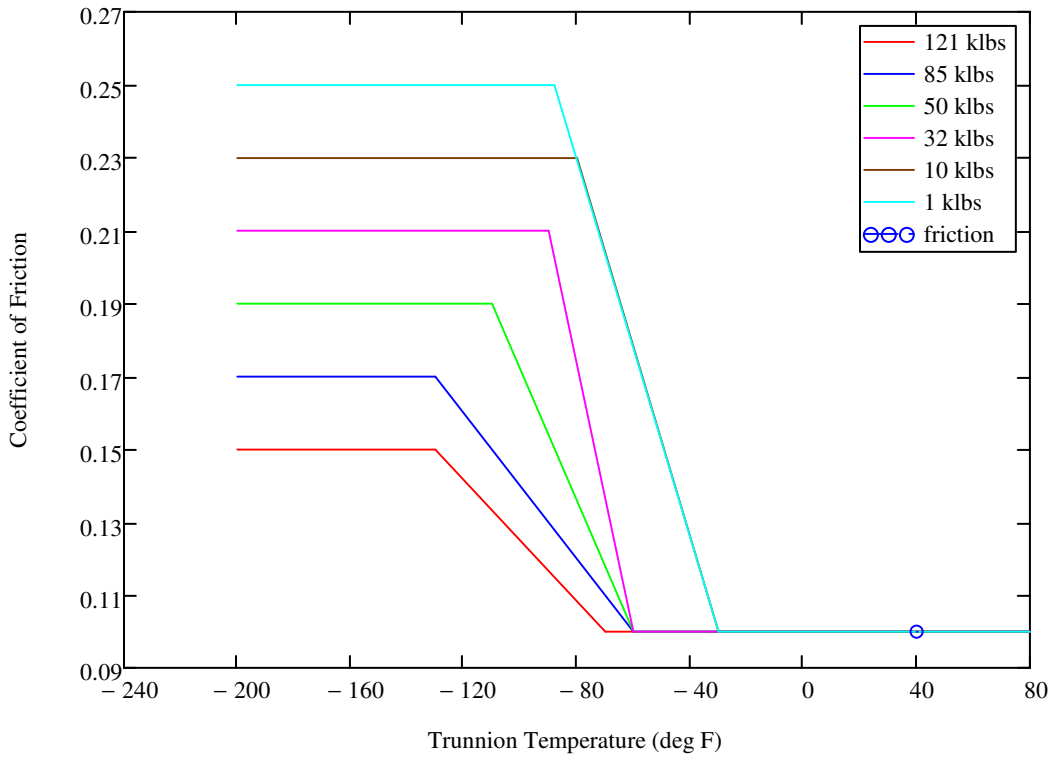

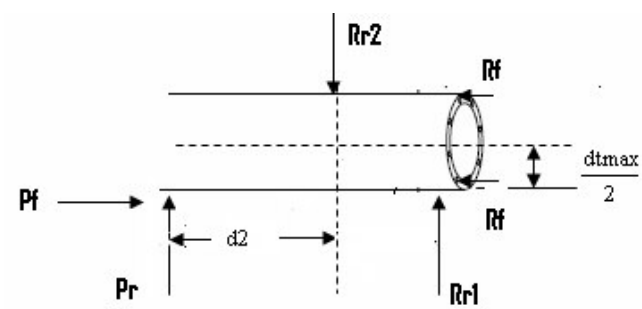

Friction coefficient $= 0.100$

Friction load (10% of load) $Pf := Pr \cdot$ $\quad Pf = 4329.9 \cdot lbf$

Friction moment $Mf := Pf \cdot \frac{dtmax}{2}$ $\quad Mf = 7017.2 \cdot in \cdot lbf$

Total moment $M := Mb + Mf$ $\quad M = 245161 \cdot in \cdot lbf$

Applied limit stress in shaft $=l := \left(M \cdot \frac{dtmax}{2 \cdot Is} \right)$ $\quad =l = 83477.6 \cdot psi$

Plastic bending allowable (Ref.NASA TM X-73305,sect B.4.5)

Section factor

Outer radius $ro := \frac{dto}{2}$ $ro = 1.62 \cdot in$

Inner radius $ri := \frac{dt89}{2}$ $ri = 0.953 \cdot in$

Area of semicircular segment $Ase := \frac{u}{2} \cdot \left(ro^2 - ri^2\right)$ $Ase = 2.696 \cdot in^2$

Distance of neutral axis from center line $ybar := \frac{4}{3 \cdot u} \cdot \left(\frac{ro^3 - ri^3}{ro^2 - ri^2}\right)$ $ybar = 0.837 \cdot in$

First moment of area $Q := Ase \cdot ybar$ $Q = 2.257 \cdot in^3$

Distance of extreme fiber from centerline of shaft $c := \frac{dtmax}{2}$ $c = 1.621 \cdot in$

Section factor $K := \frac{2 \cdot Q \cdot c}{Is}$ $K = 1.537$

Allowable bending modulus of rupture ult. $=p := 301000 \cdot psi$ (Ref.NASA TM X-73305,sect B.4.5 fig. B4.5.5.2-7)

Allowable bending modulus of rupture yld. $=y := 210000 \cdot psi$

Check

Section factor $K := 1.698 \cdot \frac{ro \cdot \left(ro^3 - ri^3\right)}{ro^4 - ri^4}$ $K = 1.5364$ (Ref. Formulas for Stress, Strain, and Structural Matrices, Table 2-2, Case 6)

$fmu := 200000 \cdot psi$ $fou := 192000 \cdot psi$ (Ref. Bruhn, table C3.2 page C3.11)

$fmy := 176000 \cdot psi$ $foy := 65000 \cdot psi$

$Fbu := fmu + fou \cdot (K - 1)$ $Fbu = 302996 \cdot psi$ (Ref. Bruhn page C3.3, equation 3)

$Fby := fmy + foy \cdot (K - 1)$ $Fby = 210868.4 \cdot psi$ (These numbers match the σp and σy closely)

Axial tension stress $=a := \frac{Pf}{As}$ $=a = 803 \cdot psi$

Shear stress $y := \frac{Pr}{As}$ $y = 8030 \cdot psi$

Stress ratios, Ultimate

Stress ratio in axial, ultimate $Rau := \frac{=a \cdot FSu}{Ftu \cdot c2tu}$ $Rau = 0.006$

Stress ratio in bending, ultimate $Rbu := \frac{=l \cdot FSu}{Fbu \cdot c2tu}$ $Rbu = 0.398$

Stress ratio in shear, ultimate $Rsu := \frac{y \cdot FSu}{Fsu \cdot c2tu}$ $Rsu = 0.093$

Margin of safety ultimate $MSu := \frac{1}{\sqrt{(Rau + Rbu)^2 + Rsu^2}} - 1$ $MSu = 1.41$

Stress ratios, Yield

Stress ratio in axial, yield $Ray := \frac{=a \cdot FSy}{Fty \cdot c2ty}$ $Ray = 0.005$

Stress ratio in bending, yield $Rby := \frac{=l \cdot FSy}{Fby \cdot c2ty}$ $Rby = 0.449$

Stress ratio in shear, yield $Rsy := \frac{y \cdot FSy}{0.5Fty \cdot c2ty}$ $Rsy = 0.098$

Margin of safety, yield $MSy := \frac{1}{\sqrt{(Ray + Rby)^2 + Rsy^2}} - 1$ $MSy = 1.15$

Check section at Y=91.5

Total Moment at Y=91.5 $M1 := Pr \cdot (94.0 \cdot in - 91.5 \cdot in + 0.5 \cdot in) + Mf$ $M1 = 136913.8 \cdot in \cdot lbf$

(Ref. Appendix C6 for the 0.5" dynamic excursion)

Applied limit stress in shaft $=l1 := \left(M1 \cdot \frac{dtmax}{2 \cdot Is1}\right)$ $=l1 = 72150.5 \cdot psi$

Plastic bending allowable (Ref.NASA TM X-73305,sect B.4.5)

Section factor

Outer radius $ro := \frac{dto}{2}$ $ro = 1.62 \cdot in$

Inner radius $ri := \frac{dti}{2}$ $ri = 1.313 \cdot in$.

Area of semicircular segment $Ase := \frac{u}{2} \cdot \left(ro^2 - ri^2\right)$ $Ase = 1.415 \cdot in^2$

Distance of neutral axis from center line $ybar := \frac{4}{3 \cdot u} \cdot \left(\frac{ro^3 - ri^3}{ro^2 - ri^2}\right)$ $ybar = 0.937 \cdot in$

First moment of area $Q := Ase \cdot ybar$ $Q = 1.326 \cdot in^3$

Distance of extreme fiber from centerline of shaft $c := \frac{dtmax}{2}$ $c = 1.62 \cdot in$

Section factor $K := \frac{2 \cdot Q \cdot c}{Is1}$ $K = 1.3972$

Allowable bending modulus of rupture ult. $=p1 := 274000 \cdot psi$ (Ref.NASA TM X-73305,sect B.4.5 fig. B4.5.5.2-7)

Allowable bending modulus of rupture yld. $=y1 := 200000 \cdot psi$

Check

Section factor $K := 1.698 \cdot \frac{ro \cdot \left(ro^3 - ri^3\right)}{ro^4 - ri^4}$ $K = 1.3968$ (Ref. Formulas for Stress, Strain, and Structural Matrices, Table 2-2, Case 6)

$fmu := 200000 \cdot psi$ $fou := 192000 \cdot psi$ (Ref. Bruhn, table C3.2 page C3.11)

$fmy := 176000 \cdot psi$ $foy := 65000 \cdot psi$

$Fbu1 := fmu + fou \cdot (K - 1)$ $Fbu1 = 276176.9 \cdot psi$ (Ref. Bruhn page C3.3, equation 3)

$Fby1 := fmy + foy \cdot (K - 1)$ $Fby1 = 201789.1 \cdot psi$ (These numbers match the $\sigma p1$ and $\sigma y1$ closely)

Axial tension stress $=a1 := \frac{Pf}{As1}$ $=a1 = 1529.8 \cdot psi$

Shear stress $y1 := \frac{Pr}{As1}$ $y1 = 15298 \cdot psi$

Stress ratios, Ultimate

Stress ratio in axial, ultimate $Rau1 := \frac{=a1 \cdot FSu}{Ftu \cdot c2tu}$ $Rau = 0.006$

Stress ratio in bending, ultimate $Rbu1 := \frac{=l1 \cdot FSu}{Fbu1 \cdot c2tu}$ $Rbu = 0.398$

Stress ratio in shear, ultimate $Rsu1 := \frac{y1 \cdot FSu}{Fsu \cdot c2tu}$ $Rsu = 0.093$

Margin of safety ultimate $MSu := \frac{1}{\sqrt{(Rau1 + Rbu1)^2 + Rsu1^2}} - 1$ $MSu = 1.34$

Stress ratios, Yield

Stress ratio in axial, yield $Ray1 := \frac{=a1 \cdot FSy}{Fty \cdot c2ty}$ $Ray1 = 0.009$

Stress ratio in bending, yield $Rby1 := \frac{=l1 \cdot FSy}{Fby1 \cdot c2ty}$ $Rby1 = 0.405$

Stress ratio in shear, yield $Rsy1 := \frac{y1 \cdot FSy}{0.5 \cdot Fty \cdot c2ty}$ $Rsy1 = 0.188$

Margin of safety yield $MSy := \frac{1}{\sqrt{(Ray1 + Rby1)^2 + Rsy1^2}} - 1$ $MSy = 1.2$

Beam and Socket analysis - Abort Landing Case

Treating the connection as a Beam in a Socket, as per SMM, Memo 41a

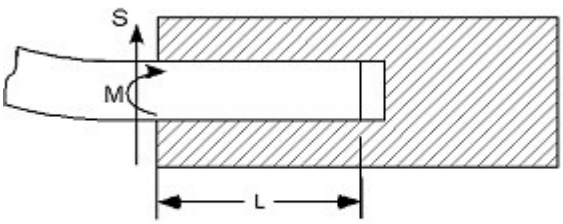

S and M are respectively beam shear in lbf and moment in in-lbf at end of socket. W is unit loading in lbf/in.

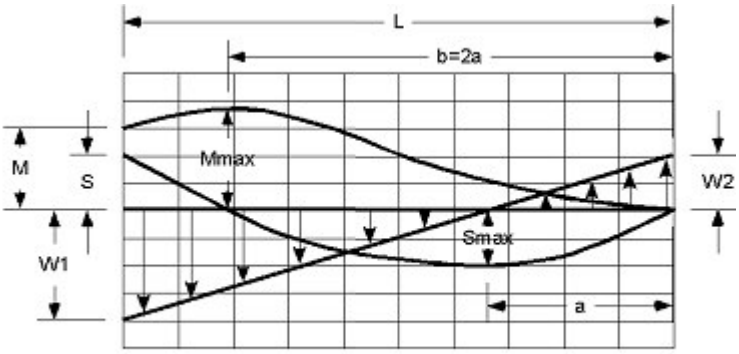

Resultant shear Load $S := Pr$ $S = 43299 \cdot lbf$

Moment at edge of sill joint $M := Mb + Mf$ $M = 245161 \cdot in \cdot lbf$

Length of overlap $L := 6.5 \cdot in$

$$slm_ratio := if\left(M = 0, 1000, S \cdot \frac{L}{M}\right) \qquad slm_ratio = 1.148$$

$$mls_ratio := if\left(S = 0, 1000, \frac{M}{S \cdot L}\right) \qquad mls_ratio = 0.871$$

Prepared By	Name	Date		File Name
	Brent Dyer	02/13/06		sill_trunnion.mcd
Checked By	C. Bala		**Engineering and Science Contract Group** *Structural Analysis Section*	Drawing No. SDG39135732
Title	USS-02 Sill Trunnion			

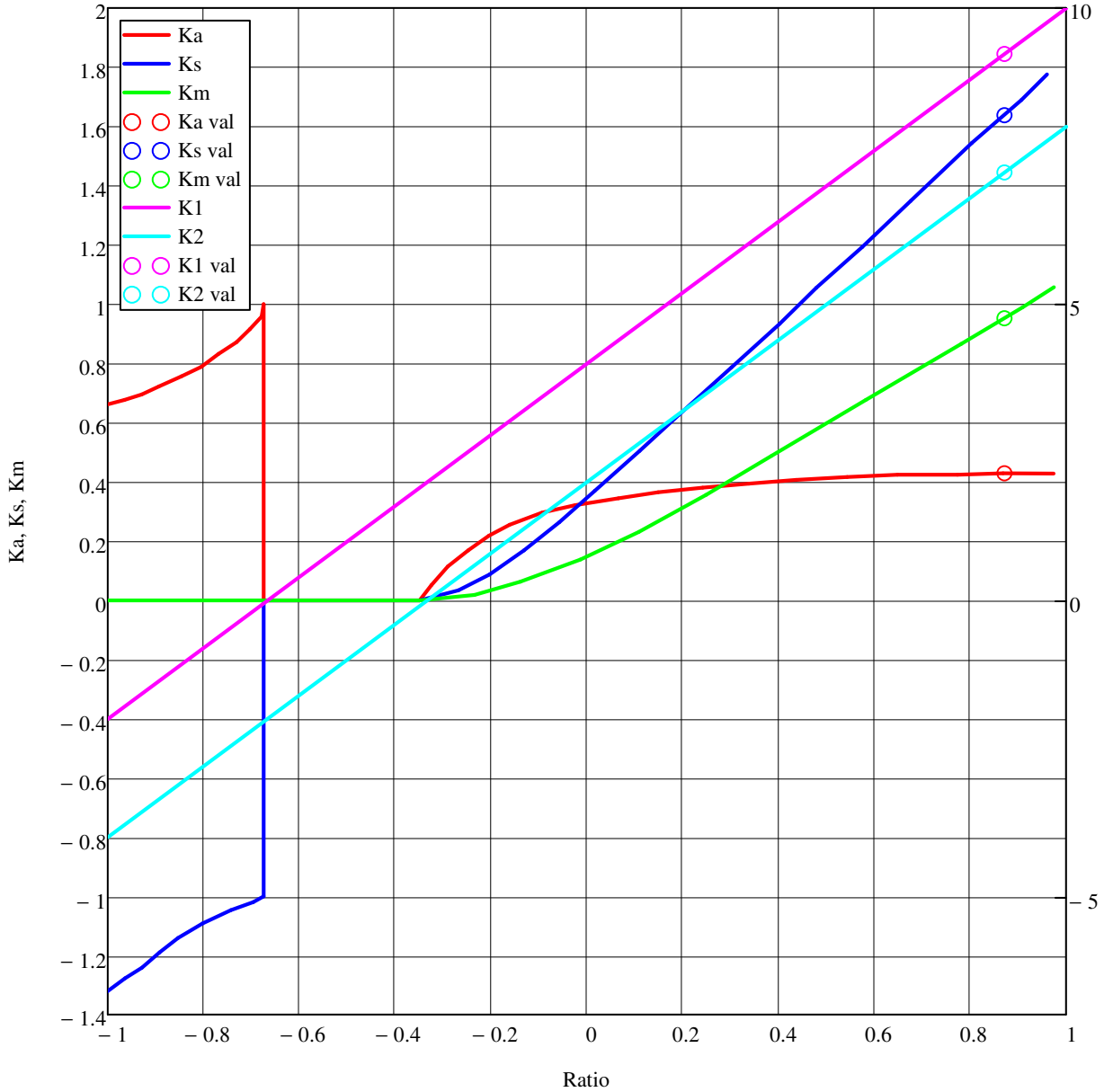

Beam and Socket Coefficients
Note if abs(SL/M) <= 1, Ratio = SL/M, otherwise Ratio = M/SL.

Coefficients are:

Ka = 0.43 Ks = 1.64 Km = 0.95

K1 = 9.23 K2 = 7.23

Calculated values are then:

$$w1 := \begin{cases} \dfrac{K1 \cdot M}{L^2} & \text{if } |slm_ratio| \le 1 \\ \dfrac{K1 \cdot S}{L} & \text{otherwise} \end{cases} \qquad w1 = 61461.2 \cdot \frac{lbf}{in}$$

$$w2 := \begin{cases} \dfrac{K2 \cdot M}{L^2} & \text{if } |slm_ratio| \le 1 \\ \dfrac{K2 \cdot S}{L} & \text{otherwise} \end{cases} \qquad w2 = 48138.5 \cdot \frac{lbf}{in}$$

$$a := Ka \cdot L \qquad a = 2.79 \cdot in$$

Max. shear

$$Smax := \begin{cases} \dfrac{-Ks \cdot M}{L} & \text{if } |slm_ratio| \le 1 \\ -Ks \cdot S & \text{otherwise} \end{cases} \qquad Smax = -70955.8 \cdot lbf$$

Max. Bending moment

$$Mmax := \begin{cases} Km \cdot M & \text{if } |slm_ratio| \le 1 \\ Km \cdot S \cdot L & \text{otherwise} \end{cases} \qquad Mmax = 268093.7 \cdot in \cdot lbf$$

Now check:

$$Sc := \frac{w1 - w2}{2} \cdot L \qquad Sc = 43298.9 \cdot lbf$$

$$Mc := \frac{-w1 + 2 \cdot w2}{6} \cdot L^2 \qquad Mc = 245161 \cdot in \cdot lbf$$

Percent error:

$$S_percentdiff := \frac{S - Sc}{S} \qquad S_percentdiff = -0 \cdot \%$$

$$M_percentdiff := \frac{M - Mc}{M} \qquad M_percentdiff = 0 \cdot \%$$

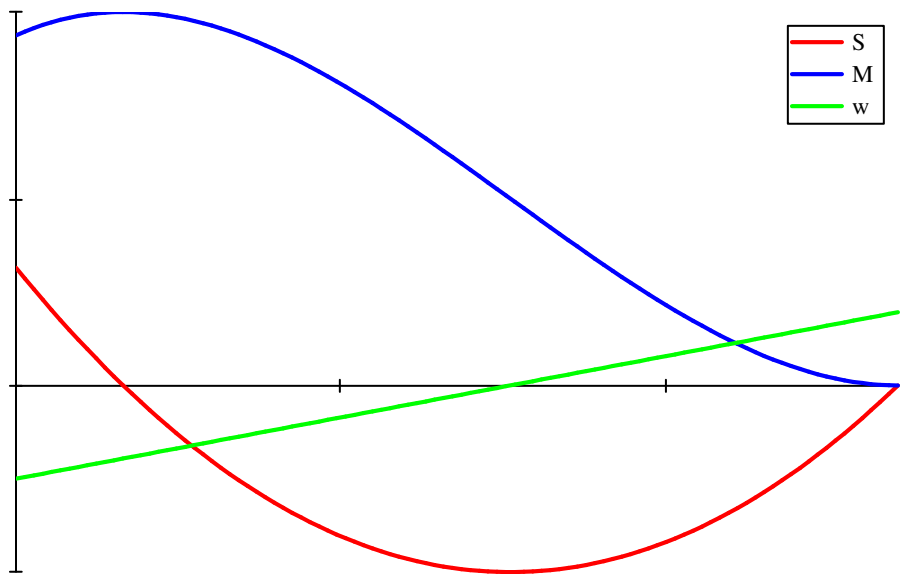

Actual Shear and Moment Distribution Inside Socket

Case 1: Max. bending moment at Y=88.075 - Abort Landing Case

Max. moment occurs at b=2a from inner end $b := 2 \cdot a$ $b = 5.575 \cdot in$ (Y=88.075)

Shear $S := 0 \cdot lbf$ Max. Bending moment $Mmax = 268093.7 \cdot in \cdot lbf$

Section properties at 5.575 in from inner end y=88.075

Inner diameter of trunnion at y=88.075 $dt8807 := 1.9 \cdot in + 0.005 \cdot in$ $dt8807 = 1.905 \cdot in$

Area of cross-section at 88.075 $As := \frac{u \cdot \left(dto^2 - dt8807^2\right)}{4}$ $As = 5.392 \cdot in^2$

Moment of inertia at 88.075 $Is := \frac{u \cdot \left(dto^4 - dt8807^4\right)}{64}$ $Is = 4.76 \cdot in^4$

Section modulus $S1 := \frac{Is}{\frac{dtmax}{2}}$ $S1 = 2.937 \cdot in^3$

Total moment $M8807 := Mmax$ $M8807 = 268093.7 \cdot in \cdot lbf$

Combined Tensile stress $=8807 := \frac{M8807}{S1}$ $=8807 = 91286.3 \cdot psi$

Shear stress $y8807 := \frac{S}{As}$ $y8807 = 0 \cdot psi$

Stress Ratios

Axial (ult) $Rau := \frac{=a \cdot FSu}{Ftu \cdot c2tu}$ $Rau = 0.006$

Bending(ult) $Rbu := \frac{FSu \cdot =8807}{Fbu \cdot c2tu}$ $Rbu = 0.435$

Shear(ult) $Rs := \frac{FSu \cdot y8807}{Fsu \cdot c2tu}$ $Rs = 0$

Axial (yld) $Ray := \frac{=a \cdot FSy}{Fty \cdot c2ty}$ $Ray = 0.005$

Bending(yld) $Rby := \frac{FSy \cdot =8807}{Fby \cdot c2ty}$ $Rby = 0.491$

Shear(yld) $Rsy := \frac{FSy \cdot y8807}{0.50Fty \cdot c2ty}$ $Rsy = 0.000$

Margin of safety

Margin of safety ultimate $MSu := \frac{1}{\sqrt{(Rau + Rbu)^2 + Rsu^2}} - 1$ $MSu = 1.22$

Margin of safety yield $MSy := \frac{1}{\sqrt{(Ray + Rby)^2 + Rsy^2}} - 1$ $MSy = 1.017$

Case 2 Max.shear at Y=85.288 - Abort Landing Case

When shear is maximum the bending moment is 0.41 of Mmax

Max.shear $Smax = -70956 \cdot lbf$

Bending moment $Ms := 0.41 \cdot Mmax$ $Ms = 109918.4 \cdot in \cdot lbf$

Max. shear occurs at a from inner end $a = 2.788 \cdot in$ (Y=85.288)

Section properties at 2.788 in from inner end y=85.288 Max.shear location

inner diameter at Y=85.288 $dt8528 := 1.9 \cdot in + 0.03 \cdot in$ $dt8528 = 1.93 \cdot in$

Wall thickness at y=85.288 $wt8528 := \frac{dto - dt8528}{2}$ $wt8528 = 0.655 \cdot in$

Area of cross-section at 85.288 $As := \frac{u \cdot \left(dto^2 - dt8528^2\right)}{4}$ $As = 5.317 \cdot in^2$

Moment of inertia at 85.288 $Is := \frac{u \cdot \left(dto^4 - dt8528^4\right)}{64}$ $Is = 4.725 \cdot in^4$

Section modulus $S1 := \frac{Is}{\frac{dtmax}{2}}$ $S1 = 2.915 \cdot in^3$

Total moment $M8528 := Ms$ $M8528 = 109918.4 \cdot in \cdot lbf$

Tensile stress $=8528 := \frac{M8528}{S1}$ $=8528 = 37701.5 \cdot psi$

Shear stress $y8528 := \left(\frac{|Smax|}{As}\right)$ $y8528 = 13345.8 \cdot psi$

Stress Ratios

Axial (ult) $Rau := \frac{=a \cdot FSu}{Ftu \cdot c2tu}$ $Rau = 0.006$

Bending(ult) $Rbu := \frac{FSu \cdot =8528}{Fbu \cdot c2tu}$ $Rbu = 0.18$

Shear(ult) $Rsu := \frac{FSu \cdot y8528}{Fsu \cdot c2tu}$ $Rsu = 0.155$

Axial (yld) $Ray := \frac{=a \cdot FSy}{Fty \cdot c2ty}$ $Ray = 0.005$

Bending(yld) $Rby := \frac{FSy \cdot =8528}{Fby \cdot c2ty}$ $Rby = 0.203$

Shear(yld) $Rsy := \frac{FSy \cdot y8528}{0.50Fty \cdot c2ty}$ $Rsy = 0.164$

Margin of safety

Margin of safety ultimate $MSu := \frac{1}{\sqrt{(Rau + Rbu)^2 + Rsu^2}} - 1$ $MSu = 3.13$

Margin of safety yield $MSy := \frac{1}{\sqrt{(Ray + Rby)^2 + Rsy^2}} - 1$ $MSy = 2.78$

Case 3 **At edge of socket Y=89.0 - Abort Landing Case**

Moment $M890 := 0.82 \cdot Mmax$ $M890 = 219836.8 \cdot in \cdot lbf$

Shear $S890 := 0.75 \cdot Smax$ $S890 = -53216.8 \cdot lbf$

Section properties at y=89.0

Area of cross-section $As := \frac{u \cdot \left(dto^2 - dt89^2\right)}{4}$ $As = 5.392 \cdot in^2$

Moment of inertia $Is := \frac{u \cdot \left(dto^4 - dt89^4\right)}{64}$ $Is = 4.76 \cdot in^4$

Section modulus $S1 := \frac{Is}{\frac{dtmax}{2}}$ $S1 = 2.937 \cdot in^3$

Combined bending stress $=890 := \frac{M890}{S1}$ $=890 = 74854.7 \cdot psi$

Shear stress $y890 := \frac{|S890|}{As}$ $y890 = 9869.5 \cdot psi$

Stress Ratios

Axial (ult) $Rau := \frac{=a \cdot FSu}{Ftu \cdot c2tu}$ $Rau = 0.006$

Bending(ult) $Rbu := \frac{FSu \cdot =890}{Fbu \cdot c2tu}$ $Rbu = 0.357$

Shear(ult) $Rs := \frac{FSu \cdot y890}{Fsu \cdot c2tu}$ $Rs = 0.115$

Axial (yld) $Ray := \frac{=a \cdot FSy}{Fty \cdot c2ty}$ $Ray = 0.005$

Bending(yld) $Rby := \frac{FSy \cdot =890}{Fby \cdot c2ty}$ $Rby = 0.403$

Shear(yld) $Rsy := \frac{FSy \cdot y890}{0.50Fty \cdot c2ty}$ $Rsy = 0.121$

Margin of safety

$MSult := \frac{1}{\sqrt{Rbu^2 + Rs^2}} - 1$ $MSult = 1.67$

$MSyld := \frac{1}{\sqrt{Rby^2 + Rsy^2}} - 1$ $MSyld = 1.38$

Nominal Landing Case:

Vertical load at primary trunnion $Fz := 53776.54 \cdot lbf$

Horizontal load at primary trunnion $Fx := 14600.43 \cdot lbf$

(Ref.AMS-02, loads model 2-04, Load case 4016, element ID 1, data file: maxtrunnionforces4000.lis)

Max.resultant load $Pr := \sqrt{Fz^2 + Fx^2}$ $Pr = 55723 \cdot lbf$

The tolerances between the sill trunnion and the sill joint are tight. Due to this tight tolerance, any side load transferred through the sill trunnion is reacted by the sill joint.

Moment arm from load to edge of sill plate $d2 := (94.0 \cdot in - 89.0 \cdot in) + 0.5 \cdot in$ $d2 = 5.5 \cdot in$

(Ref. Appendix C6 for the 0.5" dynamic excursion)

Max.bending moment at edge of sill plate $Mb := Pr \cdot d2$

$Mb = 306478.3 \cdot in \cdot lbf$

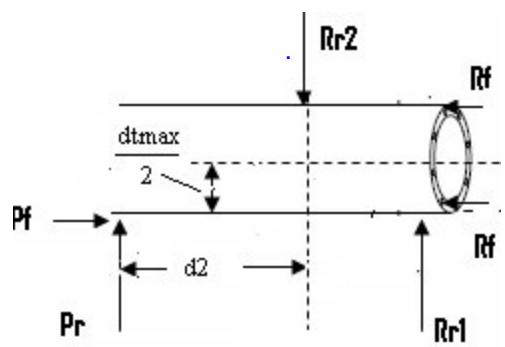

Friction coefficient is assessed based on Figure 4.1.1.1-1 of NSTS-21000-IDD-ISS, Ref. Appendix C7.

$P := Pr$ $P = 55723\ lbf$

$T := -56 \cdot deg$ (It is conservative to use the minimum temperature (Ref. Appendix C2))

Prepared By	Name	Date		File Name
	Brent Dyer	02/13/06	**Engineering and Science Contract Group**	sill_trunnion.mcd
Checked By	C. Bala		*Structural Analysis Section*	Drawing No. SDG39135732
Title	USS-02 Sill Trunnion			

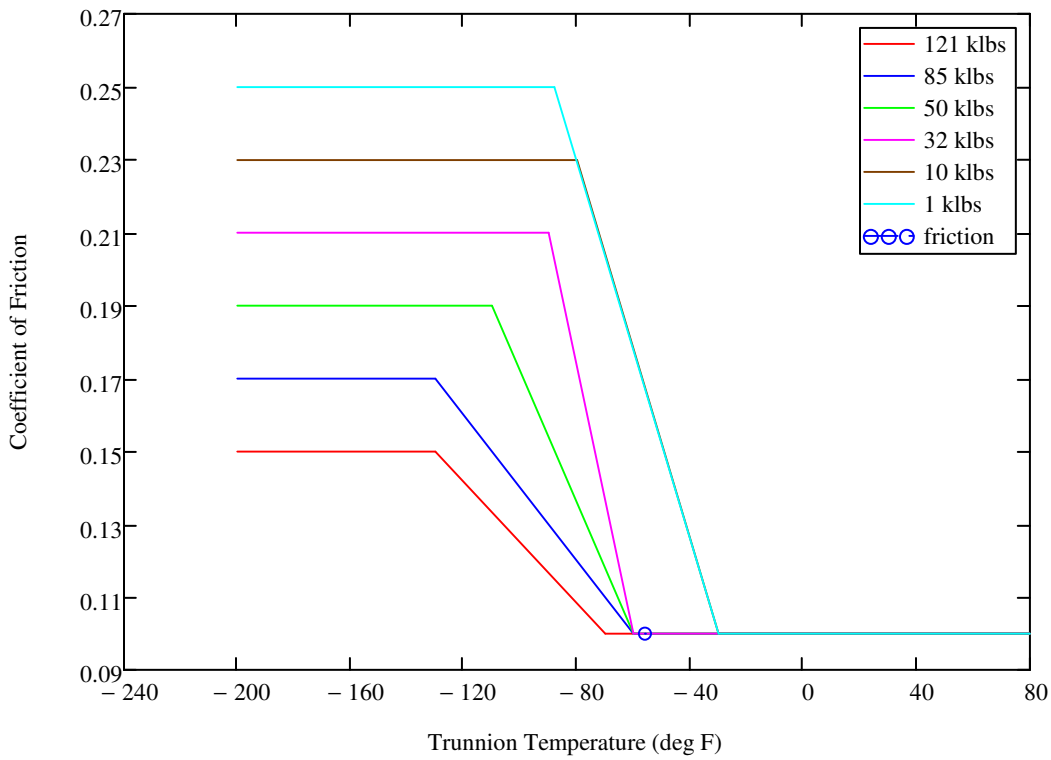

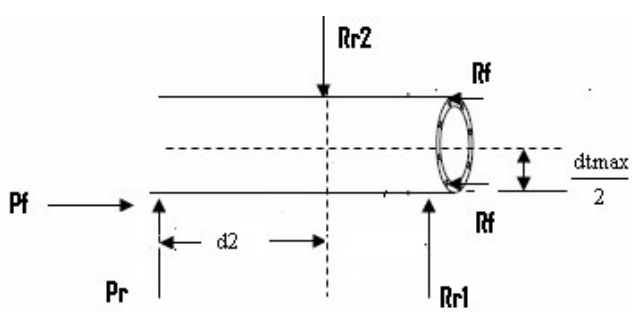

Friction coefficient $= 0.100$

Friction load (10% of load) $Pf := Pr \cdot$ $\quad Pf = 5572.3 \cdot lbf$

Friction moment $Mf := Pf \cdot \frac{dtmax}{2}$ $\quad Mf = 9030.8 \cdot in \cdot lbf$

Total moment $M := Mb + Mf$ $\quad M = 315509.1 \cdot in \cdot lbf$

Applied limit stress in shaft $=l := \left(M \cdot \frac{dtmax}{2 \cdot Is} \right)$ $\quad =l = 107431.3 \cdot psi$

Plastic bending allowable (Ref.NASA TM X-73305,sect B.4.5)

Section factor

Outer radius $ro := \frac{dto}{2}$ $ro = 1.62 \cdot in$

Inner radius $ri := \frac{dt89}{2}$ $ri = 0.953 \cdot in$

Area of semicircular segment $Ase := \frac{u}{2} \cdot \left(ro^2 - ri^2\right)$ $Ase = 2.696 \cdot in^2$

Distance of neutral axis from center line $ybar := \frac{4}{3 \cdot u} \cdot \left(\frac{ro^3 - ri^3}{ro^2 - ri^2}\right)$ $ybar = 0.837 \cdot in$

First moment of area $Q := Ase \cdot ybar$ $Q = 2.257 \cdot in^3$

Distance of extreme fiber from centerline of shaft $c := \frac{dtmax}{2}$ $c = 1.621 \cdot in$

Section factor $K := \frac{2 \cdot Q \cdot c}{Is}$ $K = 1.537$

Allowable bending modulus of rupture ult. $=p := 301000 \cdot psi$ (Ref.NASA TM X-73305,sect B.4.5 fig. B4.5.5.2-7)

Allowable bending modulus of rupture yld. $=y := 210000 \cdot psi$

Check

Section factor $K := 1.698 \cdot \frac{ro \cdot \left(ro^3 - ri^3\right)}{ro^4 - ri^4}$ $K = 1.5364$ (Ref. Formulas for Stress, Strain, and Structural Matrices, Table 2-2, Case 6)

$fmu := 200000 \cdot psi$ $fou := 192000 \cdot psi$ (Ref. Bruhn, table C3.2 page C3.11)

$fmy := 176000 \cdot psi$ $foy := 65000 \cdot psi$

$Fbu := fmu + fou \cdot (K - 1)$ $Fbu = 302996 \cdot psi$ (Ref. Bruhn page C3.3, equation 3)

$Fby := fmy + foy \cdot (K - 1)$ $Fby = 210868.4 \cdot psi$ (These numbers match the σp and σy closely)

Axial tension stress $=a := \frac{Pf}{As}$ $=a = 1033 \cdot psi$

Shear stress $y := \frac{Pr}{As}$ $y = 10334 \cdot psi$

Stress ratios, Ultimate

Stress ratio in axial, ultimate $Rau := \frac{=a \cdot FSu}{Ftu \cdot c3tu}$ $Rau = 0.007$

Stress ratio in bending, ultimate $Rbu := \frac{=l \cdot FSu}{Fbu \cdot c3tu}$ $Rbu = 0.501$

Stress ratio in shear, ultimate $Rsu := \frac{y \cdot FSu}{Fsu \cdot c3tu}$ $Rsu = 0.118$

Margin of safety ultimate $MSu := \frac{1}{\sqrt{(Rau + Rbu)^2 + Rsu^2}} - 1$ $MSu = 0.92$

Stress ratios, Yield

Stress ratio in axial, yield $Ray := \frac{=a \cdot FSy}{Fty \cdot c3ty}$ $Ray = 0.006$

Stress ratio in bending, yield $Rby := \frac{=l \cdot FSy}{Fby \cdot c3ty}$ $Rby = 0.566$

Stress ratio in shear, yield $Rsy := \frac{y \cdot FSy}{0.5Fty \cdot c3ty}$ $Rsy = 0.124$

Margin of safety, yield $MSy := \frac{1}{\sqrt{(Ray + Rby)^2 + Rsy^2}} - 1$ $MSy = 0.71$

Check section at Y=91.5

Total Moment at Y=91.5 $M1 := Pr \cdot (94.0 \cdot in - 91.5 \cdot in + 0.5 \cdot in) + Mf$ $M1 = 176200.8 \cdot in \cdot lbf$

(Ref. Appendix C6 for the 0.5" dynamic excursion)

Applied limit stress in shaft $=l1 := \left(M1 \cdot \frac{dtmax}{2 \cdot Is1}\right)$ $=l1 = 92853.9 \cdot psi$

Plastic bending allowable (Ref.NASA TM X-73305,sect B.4.5)

Section factor

Outer radius $ro := \frac{dto}{2}$ $ro = 1.62 \cdot in$

Inner radius $ri := \frac{dti}{2}$ $ri = 1.313 \cdot in$.

Area of semicircular segment $Ase := \frac{u}{2} \cdot \left(ro^2 - ri^2\right)$ $Ase = 1.415 \cdot in^2$

Distance of neutral axis from center line $ybar := \frac{4}{3 \cdot u} \cdot \left(\frac{ro^3 - ri^3}{ro^2 - ri^2}\right)$ $ybar = 0.937 \cdot in$

First moment of area $Q := Ase \cdot ybar$ $Q = 1.326 \cdot in^3$

Distance of extreme fiber from centerline of shaft $c := \frac{dtmax}{2}$ $c = 1.62 \cdot in$

Section factor $K := \frac{2 \cdot Q \cdot c}{Is1}$ $K = 1.3972$

Allowable bending modulus of rupture ult. $=p1 := 274000 \cdot psi$ (Ref.NASA TM X-73305,sect B.4.5 fig. B4.5.5.2-7)

Allowable bending modulus of rupture yld. $=y1 := 200000 \cdot psi$

Check

Section factor $K := 1.698 \cdot \frac{ro \cdot \left(ro^3 - ri^3\right)}{ro^4 - ri^4}$ $K = 1.3968$ (Ref. Formulas for Stress, Strain, and Structural Matrices, Table 2-2, Case 6)

$fmu := 200000 \cdot psi$ $fou := 192000 \cdot psi$ (Ref. Bruhn, table C3.2 page C3.11)

$fmy := 176000 \cdot psi$ $foy := 65000 \cdot psi$

$Fbu1 := fmu + fou \cdot (K - 1)$ $Fbu1 = 276176.9 \cdot psi$ (Ref. Bruhn page C3.3, equation 3)

$Fby1 := fmy + foy \cdot (K - 1)$ $Fby1 = 201789.1 \cdot psi$ (These numbers match the $\sigma p1$ and $\sigma y1$ closely)

Axial tension stress $=a1 := \frac{Pf}{As1}$ $=a1 = 1968.8 \cdot psi$

Shear stress $y1 := \frac{Pr}{As1}$ $y1 = 19688 \cdot psi$

Stress ratios, Ultimate

Stress ratio in axial, ultimate $Rau1 := \frac{=a1 \cdot FSu}{Ftu \cdot c3tu}$ $Rau1 = 0.014$

Stress ratio in bending, ultimate $Rbu1 := \frac{=l1 \cdot FSu}{Fbu1 \cdot c3tu}$ $Rbu1 = 0.475$

Stress ratio in shear, ultimate $Rsu1 := \frac{y1 \cdot FSu}{Fsu \cdot c3tu}$ $Rsu1 = 0.225$

Margin of safety ultimate $MSu := \frac{1}{\sqrt{(Rau1 + Rbu1)^2 + Rsu1^2}} - 1$ $MSu = 0.86$

Stress ratios, Yield

Stress ratio in axial, yield $Ray1 := \frac{=a1 \cdot FSy}{Fty \cdot c3ty}$ $Ray1 = 0.012$

Stress ratio in bending, yield $Rby1 := \frac{=l1 \cdot FSy}{Fby1 \cdot c3ty}$ $Rby1 = 0.511$

Stress ratio in shear, yield $Rsy1 := \frac{y1 \cdot FSy}{0.5 \cdot Fty \cdot c3ty}$ $Rsy1 = 0.236$

Margin of safety yield $MSy := \frac{1}{\sqrt{(Ray1 + Rby1)^2 + Rsy1^2}} - 1$ $MSy = 0.74$

Beam and Socket analysis - Nominal Landing Case

Treating the connection as a Beam in a Socket, as per SMM, Memo 41a

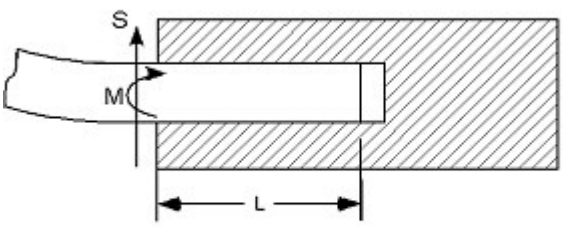

S and M are respectively beam shear in lbf and moment in in-lbf at end of socket. W is unit loading in lbf/in.

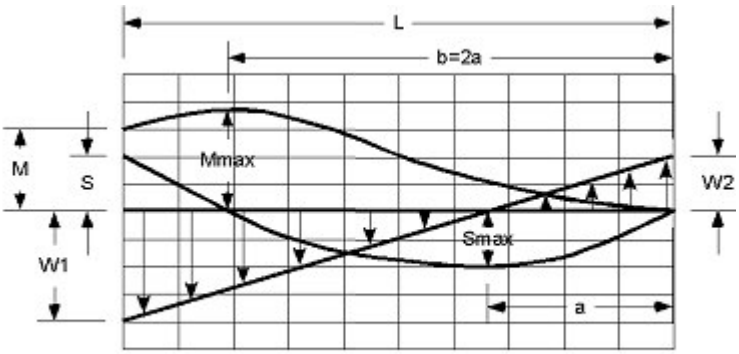

Resultant shear Load $S := Pr$ $S = 55723 \cdot lbf$

Moment at edge of sill joint $M := Mb + Mf$ $M = 315509 \cdot in \cdot lbf$

Length of overlap $L := 6.5 \cdot in$

$$slm_ratio := if\left(M = 0, 1000, S \cdot \frac{L}{M}\right) \qquad slm_ratio = 1.148$$

$$mls_ratio := if\left(S = 0, 1000, \frac{M}{S \cdot L}\right) \qquad mls_ratio = 0.871$$

Prepared By	Name	Date		File Name
	Brent Dyer	02/13/06		sill_trunnion.mcd
Checked By	C. Bala		**Engineering and Science Contract Group** *Structural Analysis Section*	Drawing No. SDG39135732
Title	USS-02 Sill Trunnion			

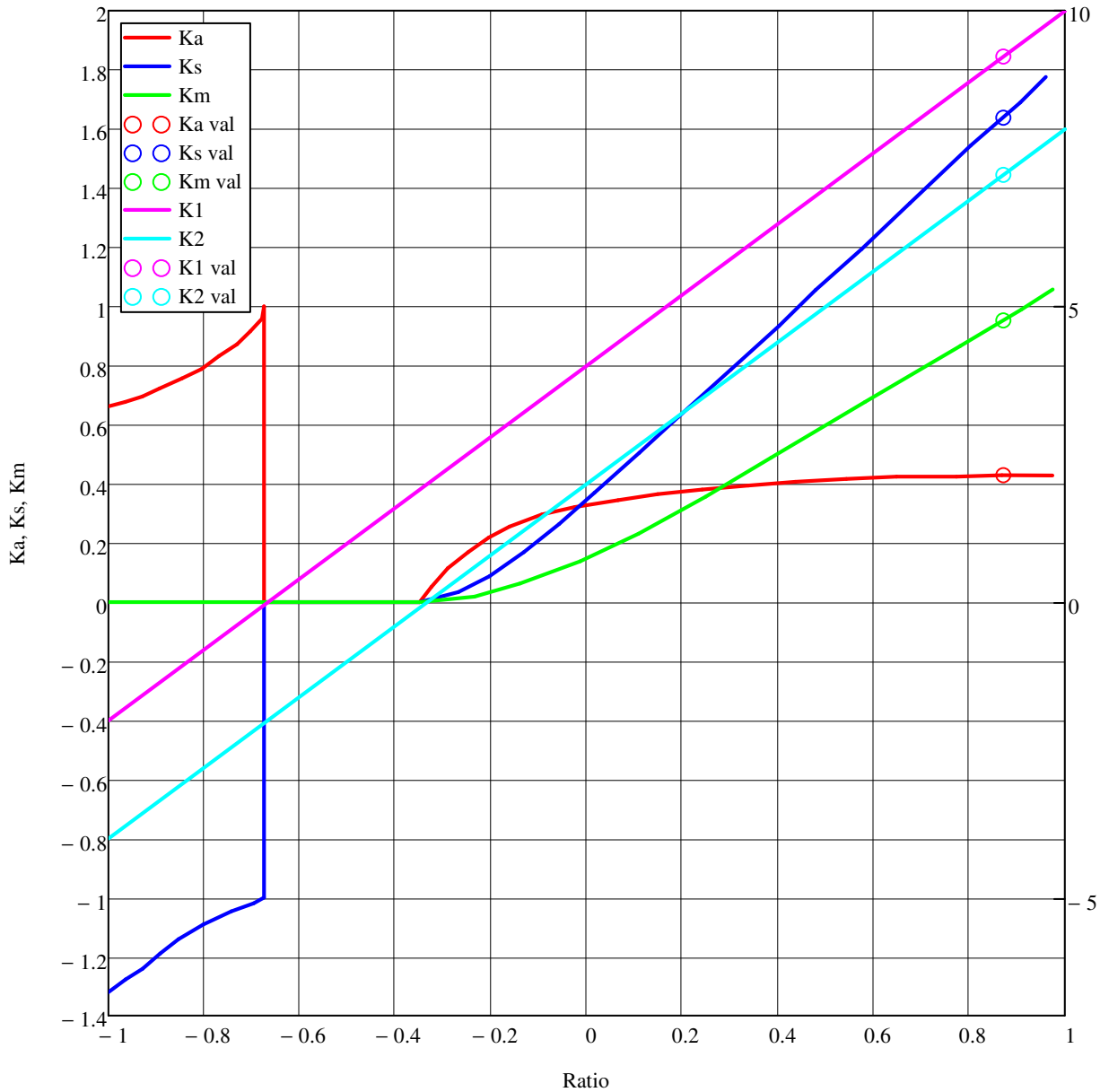

Beam and Socket Coefficients
Note if abs(SL/M) <= 1, Ratio = SL/M, otherwise Ratio = M/SL.

Coefficients are:

Ka = 0.43 Ks = 1.64 Km = 0.95

K1 = 9.23 K2 = 7.23

Calculated values are then:

$$w1 := \begin{cases} \dfrac{K1 \cdot M}{L^2} & \text{if } |slm_ratio| \le 1 \\ \dfrac{K1 \cdot S}{L} & \text{otherwise} \end{cases} \qquad w1 = 79097.3 \cdot \frac{lbf}{in}$$

$$w2 := \begin{cases} \dfrac{K2 \cdot M}{L^2} & \text{if } |slm_ratio| \le 1 \\ \dfrac{K2 \cdot S}{L} & \text{otherwise} \end{cases} \qquad w2 = 61951.7 \cdot \frac{lbf}{in}$$

$$a := Ka \cdot L \qquad a = 2.79 \cdot in$$

Max. shear

$$Smax := \begin{cases} \dfrac{-Ks \cdot M}{L} & \text{if } |slm_ratio| \le 1 \\ -Ks \cdot S & \text{otherwise} \end{cases} \qquad Smax = -91316.3 \cdot lbf$$

Max. Bending moment

$$Mmax := \begin{cases} Km \cdot M & \text{if } |slm_ratio| \le 1 \\ Km \cdot S \cdot L & \text{otherwise} \end{cases} \qquad Mmax = 345022.3 \cdot in \cdot lbf$$

Now check:

$$Sc := \frac{w1 - w2}{2} \cdot L \qquad Sc = 55723.3 \cdot lbf$$

$$Mc := \frac{-w1 + 2 \cdot w2}{6} \cdot L^2 \qquad Mc = 315509.1 \cdot in \cdot lbf$$

Percent error:

$$S_percentdiff := \frac{S - Sc}{S} \qquad S_percentdiff = 0 \cdot \%$$

$$M_percentdiff := \frac{M - Mc}{M} \qquad M_percentdiff = -0 \cdot \%$$

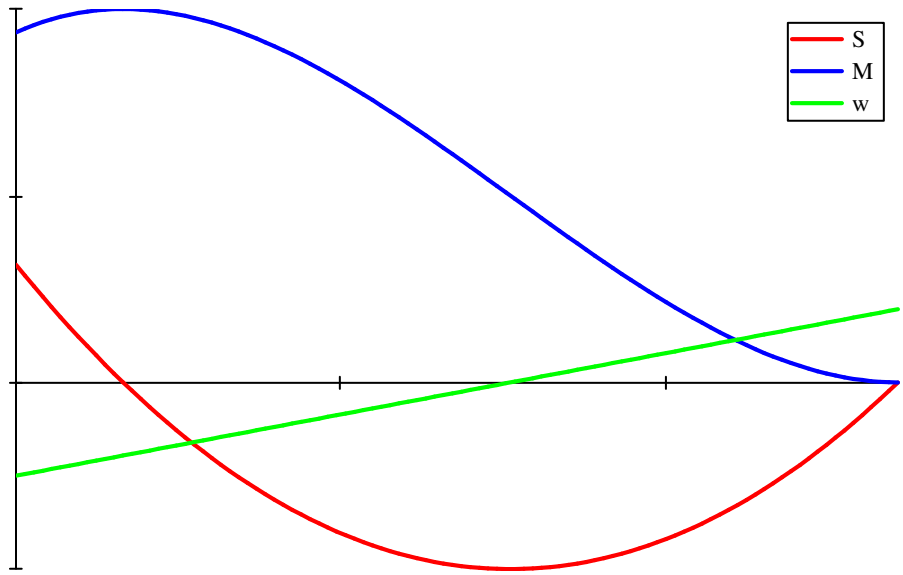

Actual Shear and Moment Distribution Inside Socket

Case 1: Max. bending moment at Y=88.075 - Nominal Landing Case

Max. moment occurs at b=2a from inner end $b := 2 \cdot a$ $b = 5.575 \cdot in$ (Y=88.075)

Shear $S := 0 \cdot lbf$ Max. Bending moment $Mmax = 345022.3 \cdot in \cdot lbf$

Section properties at 5.575 in from inner end y=88.075

Inner diameter of trunnion at y=88.075 $dt8807 := 1.9 \cdot in + 0.005 \cdot in$ $dt8807 = 1.905 \cdot in$

Area of cross-section at 88.075 $As := \frac{u \cdot \left(dto^2 - dt8807^2\right)}{4}$ $As = 5.392 \cdot in^2$

Moment of inertia at 88.075 $Is := \frac{u \cdot \left(dto^4 - dt8807^4\right)}{64}$ $Is = 4.76 \cdot in^4$

Section modulus $S1 := \frac{Is}{\frac{dtmax}{2}}$ $S1 = 2.937 \cdot in^3$

Total moment $M8807 := Mmax$ $M8807 = 345022.3 \cdot in \cdot lbf$

Combined Tensile stress $=8807 := \frac{M8807}{S1}$ $=8807 = 117480.5 \cdot psi$

Shear stress $y8807 := \frac{S}{As}$ $y8807 = 0 \cdot psi$

Stress Ratios

Axial (ult) $Rau := \frac{=a \cdot FSu}{Ftu \cdot c3tu}$ $Rau = 0.007$

Bending(ult) $Rbu := \frac{FSu \cdot =8807}{Fbu \cdot c3tu}$ $Rbu = 0.548$

Shear(ult) $Rsu := \frac{FSu \cdot y8807}{Fsu \cdot c3tu}$ $Rsu = 0$

Axial (yld) $Ray := \frac{=a \cdot FSy}{Fty \cdot c3ty}$ $Ray = 0.006$

Bending(yld) $Rby := \frac{FSy \cdot =8807}{Fby \cdot c3ty}$ $Rby = 0.619$

Shear(yld) $Rsy := \frac{FSy \cdot y8807}{0.50Fty \cdot c3ty}$ $Rsy = 0.000$

Margin of safety

Margin of safety ultimate $MSu := \frac{1}{\sqrt{(Rau + Rbu)^2 + Rsu^2}} - 1$ $MSu = 0.8$

Margin of safety yield $MSy := \frac{1}{\sqrt{(Ray + Rby)^2 + Rsy^2}} - 1$ $MSy = 0.599$

Case 2 Max.shear at Y=85.288 - Nominal Landing Case

When shear is maximum the bending moment is 0.41 of Mmax

Max.shear $Smax = -91316 \cdot lbf$

Bending moment $Ms := 0.41 \cdot Mmax$ $Ms = 141459.1 \cdot in \cdot lbf$

Max. shear occurs at a from inner end $a = 2.788 \cdot in$ (Y=85.288)

Section properties at 2.788 in from inner end y=85.288 Max.shear location

inner diameter at Y=85.288 $dt8528 := 1.9 \cdot in + 0.03 \cdot in$ $dt8528 = 1.93 \cdot in$

Wall thickness at y=85.288 $wt8528 := \frac{dto - dt8528}{2}$ $wt8528 = 0.655 \cdot in$

Area of cross-section at 85.288 $As := \frac{u \cdot \left(dto^2 - dt8528^2\right)}{4}$ $As = 5.317 \cdot in^2$

Moment of inertia at 85.288 $Is := \frac{u \cdot \left(dto^4 - dt8528^4\right)}{64}$ $Is = 4.725 \cdot in^4$

Section modulus $S1 := \frac{Is}{\frac{dtmax}{2}}$ $S1 = 2.915 \cdot in^3$

Total moment $M8528 := Ms$ $M8528 = 141459.1 \cdot in \cdot lbf$

Tensile stress $=8528 := \frac{M8528}{S1}$ $=8528 = 48519.8 \cdot psi$

Shear stress $y8528 := \left(\frac{|Smax|}{As}\right)$ $y8528 = 17175.3 \cdot psi$

Stress Ratios

Axial (ult) $Rau := \frac{=a \cdot FSu}{Ftu \cdot c3tu}$ $Rau = 0.007$

Bending(ult) $Rbu := \frac{FSu \cdot =8528}{Fbu \cdot c3tu}$ $Rbu = 0.226$

Shear(ult) $Rsu := \frac{FSu \cdot y8528}{Fsu \cdot c3tu}$ $Rsu = 0.196$

Axial (yld) $Ray := \frac{=a \cdot FSy}{Fty \cdot c3ty}$ $Ray = 0.006$

Bending(yld) $Rby := \frac{FSy \cdot =8528}{Fby \cdot c3ty}$ $Rby = 0.256$

Shear(yld) $Rsy := \frac{FSy \cdot y8528}{0.50Fty \cdot c3ty}$ $Rsy = 0.206$

Margin of safety

Margin of safety ultimate $MSu := \frac{1}{\sqrt{(Rau + Rbu)^2 + Rsu^2}} - 1$ $MSu = 2.28$

Margin of safety yield $MSy := \frac{1}{\sqrt{(Ray + Rby)^2 + Rsy^2}} - 1$ $MSy = 2$

Case 3 **At edge of socket Y=89.0 - Nominal Landing Case**

Moment $M890 := 0.82 \cdot Mmax$ $M890 = 282918.3 \cdot in \cdot lbf$

Shear $S890 := 0.75 \cdot Smax$ $S890 = -68487.2 \cdot lbf$

Section properties at y=89.0

Area of cross-section $As := \frac{u \cdot \left(dto^2 - dt89^2\right)}{4}$ $As = 5.392 \cdot in^2$

Moment of inertia $Is := \frac{u \cdot \left(dto^4 - dt89^4\right)}{64}$ $Is = 4.76 \cdot in^4$

Section modulus $S1 := \frac{Is}{\frac{dtmax}{2}}$ $S1 = 2.937 \cdot in^3$

Combined bending stress $=890 := \frac{M890}{S1}$ $=890 = 96334 \cdot psi$

Shear stress $y890 := \frac{|S890|}{As}$ $y890 = 12701.6 \cdot psi$

Stress Ratios

Axial (ult) $Rau := \frac{=a \cdot FSu}{Ftu \cdot c3tu}$ $Rau = 0.007$

Bending(ult) $Rb := \frac{FSu \cdot =890}{Fbu \cdot c3tu}$ $Rb = 0.450$

Shear(ult) $Rs := \frac{FSu \cdot y890}{Fsu \cdot c3tu}$ $Rs = 0.145$

Axial (yld) $Ray := \frac{=a \cdot FSy}{Fty \cdot c3ty}$ $Ray = 0.006$

Bending(yld) $Rby := \frac{FSy \cdot =890}{Fby \cdot c3ty}$ $Rby = 0.508$

Shear(yld) $Rsy := \frac{FSy \cdot y890}{0.50Fty \cdot c3ty}$ $Rsy = 0.153$

Margin of safety $MSult := \frac{1}{\sqrt{Rb^2 + Rs^2}} - 1$ $MSult = 1.12$

$MSyld := \frac{1}{\sqrt{Rby^2 + Rsy^2}} - 1$ $MSyld = 0.89$

2.1.6 Sill Plate (SDG39135733)

Prepared By	Name	Date	Engineering and Science Contract Group	File Name
	G. Reyes	07/14/09		sillplate.mcd
Checked By	C. Bala		*Structural Analysis Section*	Draw ing No. SDG39135733
Title	USS-02 Sill Plate			

Sill Plate SDG39135733

The Sill Plate is classified as a non-structural component. The material of the Sill Plate is Al Alloy 6061-T651.

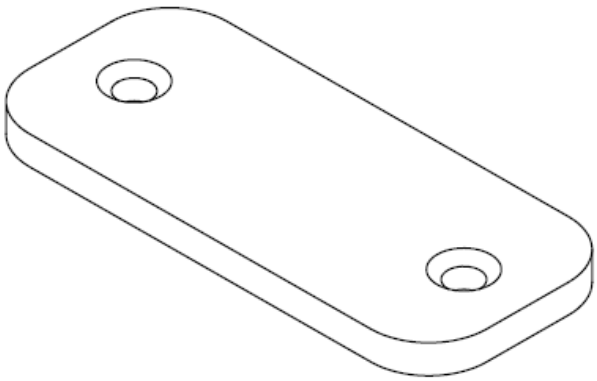

2.1.7 Lower Trunnion Bridge Beam Elbow

Margins of Safety

Table 2.1.7-1 Minimum Margin of Safety Summary

Part / Dwg Number	Part Name / Description	Material & Heat Treatment	Critical Load Case	Failure Mode	Margin of Safety	Reference Page
SDG39135734	Bridge Beam Elbow, Lower Trunnion (in-between Sill Joint and Lower Trunnion Bridge Beam)	AL ALY 7050 T7451	2015	Tension	1.97 (u)	2.1.7-22

Notes:

1. Factors of Safety are 1.4 for Ultimate and 1.1 for Yield.
2. Boundary conditions are at five Trunnion locations.
3. 128 load cases of launch and off-nominal landing are applied.
4. u = ultimate, y = yield

Factors of Safety

The hardware is designed with a factor of safety of 1.1 and 1.4 for yield and ultimate, respectively. This is for both launch and landing load conditions.

Description of Structure

Figure 2.1.7-1 below shows the locations of four Bridge Beam Elbow Joints in AMS-02. The joints were machined out of 7050-T7451 Aluminum Alloy block. All four joints are identical. The upper part of each Joint is riveted to the Sill Joints. The lower part of the elbow is riveted to the Lower Trunnion Bridge Beam.

The model was then constrained with DOF's 1&3 at Trunnion 1&2 (see Figure 2.1.7-1), with DOF's 3 at Trunnion 3&4, and with DOF's 2 at Trunnion 5.

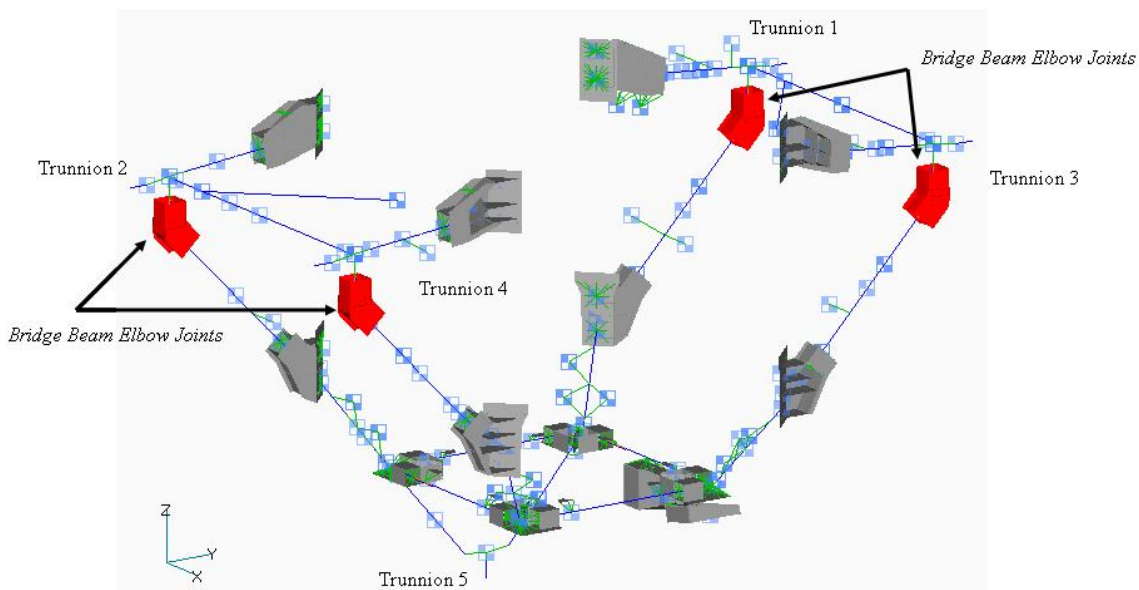

Figure 2.1.7-1 Location of the Bridge Beam Elbow Joints in AMS-02

* Note that in the above figure the Vacuum Case is not shown for clarity. With respect to the XY plane, Trunnion 3, 1, 2, and 4 are located in 1st, 2nd, 3rd, and 4th quadrants, respectively. Elbow joint numbering / referencing in this report are identical to the Trunnion numbers.

Description of Model

A FEM model was built of the Bridge Beam Elbow Joint using FEMAP. For each of the four Joints:

1. 5340 Nodes, 4560 Elements (including the CBEAM and RBE2 elements that are technically not part of the Elbow Joint but used to model the Sill Joint and Bridge Beam interfaces).
2. Elbow joint modeled using 2618 CHEXA, 348 CPENTA, and 8 CTETRA solid elements along with 1558 CQUAD4, 14 CTRIA3 plate elements (4546 elements total).
    a. Solid-to-shell connections are established using RSSCON elements that were manually created.
    b. For the purpose of lowering the strain energy in the harmonic model checks, some RSSCON elements were replaced with equally weighted RBE3 elements at the grid point location that produced failure. These locations showed high ground check forces when RSSCON elements were used.
    c. Properties for the upper and lower elbow joint plate elements are identical yet have different IDs for no other reason than model organization.
3. The Sill Joint Interface (representative rivets and sheath):
    a. Elbow Joint is connected to Sill Joint sheath's 4 CBEAM elements using 4 RBE2s whose independent node is at the properly located CBEAM element and whose dependent nodes are at the appropriate rivet locations.
    b. DOF 123 is transferred to the dependent nodes.
    c. 4 RBE2s representing 5 rows of rivets, for a total of 96 rivets at this connection location.
    d. The Sill Joint sheath is part of the Elbow Joint model imported into the detailed loads model with the interface being a single node. Technically speaking the Sill Joint sheath is not part of the Bridge Beam Elbow Joint; hence, it is not analyzed in this section.
    e. The material property for the Sill Joint sheath CBEAM elements has zero density because the mass was properly accounted for / adjusted in the loads model. The material and property was taken from the loads model with no changes to the ID.
4. The Bridge Beam Interface (representative rivets and insert):
    a. Elbow Joint is connected to Bridge Beam insert's 3 CBEAM elements using 3 RBE2s whose independent node is at the properly located CBEAM element and whose dependent nodes are at the appropriate rivet locations.
    b. DOF 123 is transferred to the dependent nodes.
    c. 3 RBE2s representing 3 rows of rivets (staggered), for a total of 60 rivets at this connection location.
    d. The Bridge Beam insert is part of the Elbow Joint model imported into the detailed loads model with the interface being a single node. Technically speaking the Bridge Beam insert is not part of the Bridge Beam Elbow Joint; hence, it is not analyzed in this section.
    e. The material property for the Bridge Beam insert CBEAM elements has a density that was properly adjusted in the loads model. The material and property was taken from the loads model with no changes to the ID.

Table 2.1.7-2 shows the numbering scheme used for the Bridge Beam Elbow Joint. Node and element numbers include beam elements previously discussed.

Table 2.1.7-2 FEM Numbering Scheme for the Bridge Beam Elbow Joint

DESCRIPTION	NODE #	ELEM #	PROP	MAT'L
Joint 1 2nd quadrant	13,020,001 – 13,021,120 13,021,123 – 13,025,340 1201 *(top interface)* 1573 *(bottom interface)*	13,020,001 – 13,024,560	1010 *Lower beams (insert portion only)* 1015 *Upper beams (sheath portion only)* 13,000,001 *Lower plate elements* 13,000,002 *Upper plate elements* 13,000,005 *Solid elements*	1 *Upper, zero density beams* 1005 *Lower, adjusted density beams* 13,000,001 *7050-T7451 Alum*
Joint 2 3rd quadrant	13,000,001 – 13,001,120 13,001,123 – 13,005,340 1208 *(top interface)* 1574 *(bottom interface)*	13,000,001 – 13,004,560		
Joint 3 1st quadrant	13,010,001 – 13,011,120 13,011,123 – 13,015,340 1215 *(top interface)* 1575 *(bottom interface)*	13,010,001 – 13,014,560		
Joint 4 4th quadrant	13,030,001 – 13,031,120 13,031,123 – 13,035,340 1222 *(top interface)* 1224 *(bottom interface)*	13,030,001 – 13,034,560		

Table 2.1.7-3 FEM Numbering Scheme for the Bridge Beam Elbow Joint Solid-to-Plate Element Connections

DESCRIPTION	ELEM #
Joint 1 2nd quadrant	upper RSSCON 13,520,001 – 13,520,062, without* 5,6,7,15,16,32,33,34,46,47 lower RSSCON 13,620,001 – 13,620,054, without* 11,12,13,14,15 lower RSSCON (ribs outer elbow) 13,720,001 – 13,720,016, no exclusions lower RSSCON (ribs inner elbow) 13,820,001 – 13,820,012, without* 5,6 RBE3 elements located at previously discussed** appropriate grid point 13,920,001 – 13,920,011
Joint 2 3rd quadrant	upper RSSCON 13,500,001 – 13,500,062, without* 46,47,61,62 13,500,047 and 13,500,061 are RBE3 elements at appropriate grid point** lower RSSCON 13,600,001 – 13,600,054, no exclusions lower RSSCON (ribs outer elbow) 13,700,001 – 13,700,016, no exclusions lower RSSCON (ribs inner elbow) 13,800,001 – 13,800,012, no exclusions
Joint 3 1st quadrant	upper RSSCON 13,510,001 – 13,510,062, without* 5,6,7,15,16,32,33,34,46,47 lower RSSCON 13,610,001 – 13,610,054, without* 11,12,13,14,15 lower RSSCON (ribs outer elbow) 13,710,001 – 13,710,016, no exclusions lower RSSCON (ribs inner elbow) 13,810,001 – 13,810,012, without* 5,6 RBE3 elements located at previously discussed** appropriate grid point 13,910,001 – 13,910,011
Joint 4 4th quadrant	upper RSSCON 13,530,001 – 13,530,062, without* 46,47,61,62 13,530,047 and 13,530,061 are RBE3 elements at appropriate grid point** lower RSSCON 13,630,001 – 13,630,054, no exclusions lower RSSCON (ribs outer elbow) 13,730,001 – 13,730,016, no exclusions lower RSSCON (ribs inner elbow) 13,830,001 – 13,830,012, no exclusions

* The shorthand nomenclature is such that 5 will imply 13,520,005 for joint 1. The shorthand number exists in the range given to the left of the set of shorthand numbers.
** See beginning of section entitled *Description of Model*.
Note the 10,000 offset from quadrant to quadrant. The 3rd quadrant was created first then copied (translation and/or rotation) to the other locations. The fact that more fixes were needed for the 1st and 2nd quadrant was eventually linked to precision and/or rounding using the *Modify, Rotate By, Element* command in FEMAP®.

Figure 2.1.7-2 shows the FE model of one of the Bridge Beam Elbow joints. All four joints in the model are identical. The component consists of an upper insert and lower sheath as well as a middle solid section of aluminum. The upper portion is inserted into the sill joint and the connection is made with rivets. The lower portion covers a portion of the lower trunnion bridge beam and the connection is also made with rivets. The rivets are represented in the model using RBE2 elements as shown in the lower left depiction of the joint in the figure. The independent node of said RBE2 elements is also on beam elements whose cross section is from the appropriate region of the sill joint and lower trunnion bridge beam. The solid to shell connections are made primarily with RSSCON elements shown in the lower right depiction in the figure with the exception of a few RBE3 replacements.

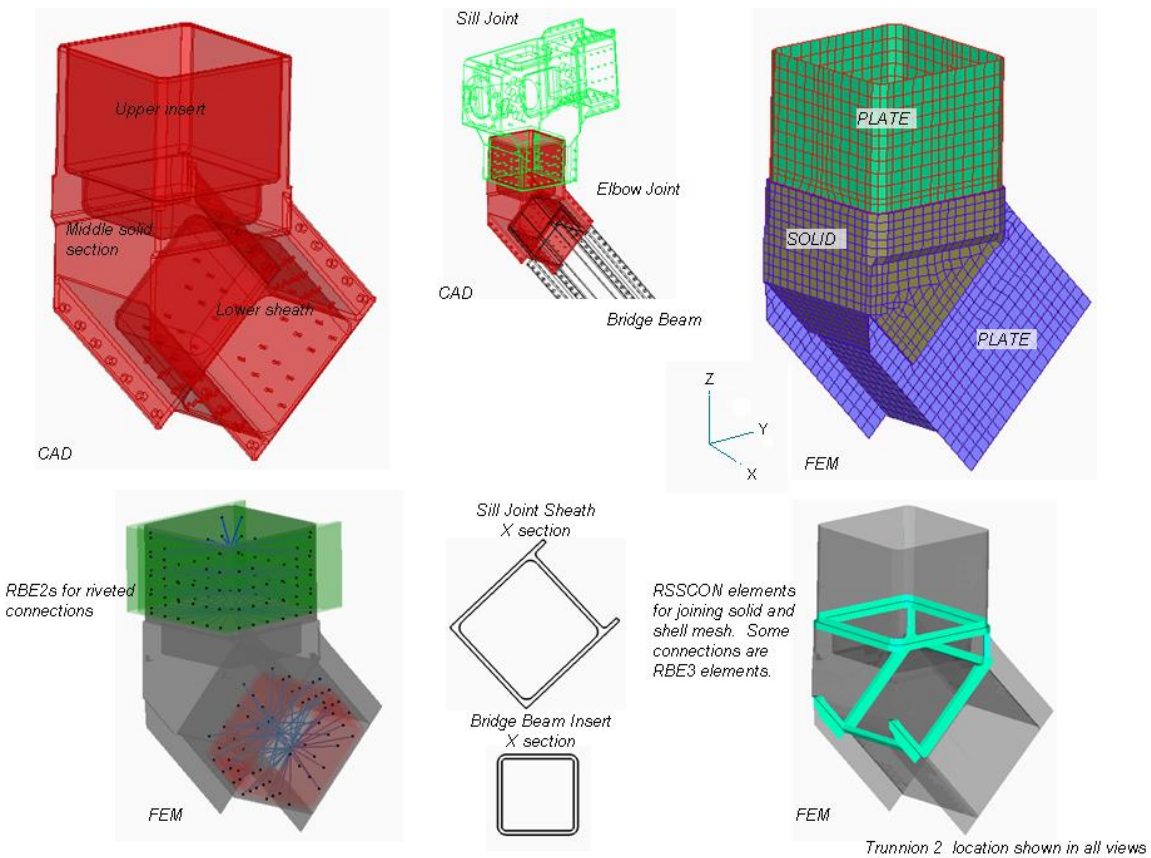

Figure 2.1.7-2 FE Model of the Bridge Beam Elbow Joint

Model Checks

The weight of a single joint in the FEM model is 16.25lbs calculated using FEMAP®, while the more detailed CAD weight is 16.25lbs. This is the only model check performed solely on the bridge beam elbow joint.

For the entire USS model check see section 2.2.4.

The comparison of the strap loads in the load model and the detailed model was performed using randomly picked loads. Loads in both models closely matched. This information can be found in Appendix A17 – 2-06 Trunnion and Strap Force NASPOST Results (see Section 2.2.4 and 2.1.7).

Material and Temperature

The Bridge Beam Elbow joints are 7050-T7451 Aluminum Alloy. The material properties are taken from MMPDS-01. Temperature limits at the Bridge Beam Elbow Joints are provided by the Thermal Analysis Group. For launch conditions, the temperature range is between 40ºF and 120ºF. For nominal landing conditions, the temperature range is from -78ºF to 101ºF. For abort landing conditions, the temperature range is from 40ºF to 150ºF.

Analysis

MSC/NASTRAN v.2005 was used as a solver for analyzing the complete math model of AMS-02 version 2-06.

A total of 128 load cases were applied for launch and abort landing.

Loads across the top and bottom portion of the elbow joints were extracted from the FE model. These loads are used in calculations to find the critical stresses for the Bridge Beam Elbow Joints' beam cross sections (top and bottom). The computed stresses are compared to the ultimate and yield strength of 7050-T7451 Aluminum Alloy while taking into account temperature degradation effects. All margins of safety are positive. Since the beam cross sections show positive margins, the solid center section will also have positive margins.

Material Properties : 7050-T7451 AL ALY, BMS 7-323C
or AMS 4050

$F_{tu} := 66000\,psi$

$F_{ty} := 57000\,psi$

$F_{su} := 43000\,psi$

(MMPDS-01, Table 3.7.4.0(b_1) for thickness of 5.001"-6.000")

Factors of Safety, $FS_u := 1.4$ $FS_y := 1.1$

Temperature reduction factors, *(Ref. MMPDS-01, Figure 3.7.4.2.1)*

+ At 120°F for Launch condition:
  - Ultimate: $\gamma_{u1} := 0.95$
  - Yield: $\gamma_{y1} := 0.99$

+ At 150°F for Abort Landing condition:
  - $\gamma_{u2} := 0.91$
  - $\gamma_{y2} := 0.97$

Allowable stresses:

Launch:

$F_{tu1.a} := \gamma_{u1} \cdot F_{tu}$ $F_{tu1.a} = 62700psi$

$F_{ty1.a} := \gamma_{y1} \cdot F_{ty}$ $F_{ty1.a} = 56430psi$

$F_{su1.a} := \gamma_{u1} \cdot F_{su}$ $F_{su1.a} = 40850psi$

Abort landing condition:

$F_{tu2.a} := \gamma_{u2} \cdot F_{tu}$ $F_{tu2.a} = 60060psi$

$F_{ty2.a} := \gamma_{y2} \cdot F_{ty}$ $F_{ty2.a} = 55290psi$

$F_{su2.a} := \gamma_{u2} \cdot F_{su}$ $F_{su2.a} = 39130psi$

Goemetry: 5.938X5.938X.25 Tube (*top-symmetric cross section*)

$bTop := 5.938 \cdot in \quad dTop := 5.938 \cdot in \quad tTop := .250 \cdot in \qquad cTop := \frac{bTop}{2}$

$ATop := bTop \cdot dTop - (bTop - 2 \cdot tTop) \cdot (dTop - 2 \cdot tTop) \qquad ATop = 5.69 in^2$

$IntTop := \frac{bTop \cdot dTop^3 - (bTop - 2 \cdot tTop) \cdot (dTop - 2 \cdot tTop)^3}{12} \qquad IntTop = 30.73 in^4$

Top cantilever distance to solid chunk of aluminum:

$dCant_T := 6.0 \cdot in$

Goemetry: 5.5X5.5X.25 Tube (*bottom-symmetric cross section if flanges ignored - conservative*)

$bBot := 5.5 \cdot in \quad dBot := 5.5 \cdot in \quad tBot := .250 \cdot in \qquad cBot := \frac{bBot}{2}$

$ABot := bBot \cdot dBot - (bBot - 2 \cdot tBot) \cdot (dBot - 2 \cdot tBot) \qquad ABot = 5.25 in^2$

$IntBot := \frac{bBot \cdot dBot^3 - (bBot - 2 \cdot tBot) \cdot (dBot - 2 \cdot tBot)^3}{12} \qquad IntBot = 24.17 in^4$

Bottom cantilever distance to solid chunk of aluminum:

$dCant_B := 5.31349 in$

Stresses for Launch (lower beam forces):

$load := READPRN("beamLoads.Bot.1k.txt")$ $\quad i := 1..rows(load)$

Element ID: $ID := load^{\langle 1 \rangle}$ Load case number: $LC := load^{\langle 2 \rangle}$

+ At end A of beam element:

Moment: $M1a := load^{\langle 3 \rangle} \cdot in \cdot lbf$ $\quad M2a := load^{\langle 4 \rangle} \cdot in \cdot lbf$

Shear force: $V1a := load^{\langle 5 \rangle} \cdot lbf$ $\quad V2a := load^{\langle 6 \rangle} \cdot lbf$

Axial force: $Pa := load^{\langle 7 \rangle} \cdot lbf$ Total torque: $Toa := load^{\langle 8 \rangle} \cdot in \cdot lbf$

Total Bending:

$My_i := \left| -M2a_i - V2a_i \cdot dCant_B \right|$ $\quad max(My) = 23673 in \cdot lbf$

$Mz_i := \left| M1a_i + V1a_i \cdot dCant_B \right|$ $\quad max(Mz) = 17376 in \cdot lbf$

Axial Stress:

Stresses on cross section:

Normal is direct axial plus bending: (Conservative)

Tension:

$$\sigma t_i := \frac{Pa_i}{ABot} \qquad max(\sigma t) = 7888 psi$$

Bending:

$$\sigma b_i := \left| \frac{My_i \cdot cBot}{IntBot} \right| + \left| \frac{Mz_i \cdot cBot}{IntBot} \right| \qquad max(\sigma b) = 3453 psi$$

Tension plus bending:

$$\sigma_i := \sigma t_i + \sigma b_i \qquad max(\sigma) = 10085 psi$$

Shear Stress:

Shear due to transverse loading:

$$\tau v_i := \sqrt{\left(\frac{V1a_i}{ABot}\right)^2 + \left(\frac{V2a_i}{ABot}\right)^2} \qquad \max(\tau v) = 407\text{psi}$$

Shear due to torsion (conservative):

$$\tau t_i := \frac{\left|Toa_i\right|}{2 \cdot tBot \cdot (bBot - tBot) \cdot (dBot - tBot)} \qquad \max(\tau t) = 1039\text{psi}$$

tt from Roark's 6th, p352, Table 20, Case 16, Avg. Shear stress

Combined shear:

$$\tau_i := \tau v_i + \tau t_i \qquad \max(\tau) = 1318\text{psi}$$

Principal Stresses:

$$\sigma p_{i,1} := \frac{\sigma_i}{2} + \left[\left(\frac{\sigma_i}{2}\right)^2 + (\tau_i)^2\right]^{\frac{1}{2}} \qquad \max(\sigma p) = 10188\text{psi}$$

$$\sigma p_{i,2} := \frac{\sigma_i}{2} - \left[\left(\frac{\sigma_i}{2}\right)^2 + (\tau_i)^2\right]^{\frac{1}{2}} \qquad \min(\sigma p) = -4131\text{psi}$$

Maximum principal stress is:

$$\sigma max_i := \begin{cases} \left|\sigma p_{i,1}\right| & \text{if } \left|\sigma p_{i,1}\right| \ge \left|\sigma p_{i,2}\right| \\ \left|\sigma p_{i,2}\right| & \text{otherwise} \end{cases}$$

Von-Mises Stress:

$$\sigma vm_i := \sqrt{(\sigma p_{i,1})^2 + (\sigma p_{i,2})^2 - \sigma p_{i,1} \cdot \sigma p_{i,2}} \qquad \max(\sigma vm) = 10240\text{psi}$$

Maximum shear:

$$\tau max_i := \sqrt{\frac{1}{4} \cdot (\sigma_i)^2 + (\tau_i)^2} \qquad \max(\tau max) = 5146\text{psi}$$

Margins of safety:

Ultimate

$$MSu_i := \begin{cases} \left(\dfrac{F_{tu1.a}}{FS_u \cdot \sigma max_i}\right) - 1 & \text{if } \sigma max_i \neq 0 \cdot psi \\ 10000 & \text{otherwise} \end{cases} \qquad \min(MSu) = 3.4$$

Minimum margin occurs on element 1221, for load case 1016

$$info := \left(csort\left(augment\left(ID, LC, MSu, \frac{Pa}{1 \cdot lbf}, \frac{V1a}{1 \cdot lbf}, \frac{V2a}{1 \cdot lbf}, \frac{Toa}{1 \cdot in \cdot lbf}, \frac{My}{1 \cdot in \cdot lbf}, \frac{Mz}{1 \cdot in \cdot lbf}\right), 3\right)^T\right)^{\langle 1 \rangle^T}$$

$$info = (1221 \;\; 1016 \;\; 3.4 \;\; 40763.95 \;\; -1097.19 \;\; -74.01 \;\; 11231.41 \;\; 3227.53 \;\; 17168.57)$$

Ultimate, shear

$$MSsu_i := \begin{cases} \left(\dfrac{F_{su1.a}}{FS_u \cdot \tau max_i}\right) - 1 & \text{if } \tau max_i \neq 0 \cdot psi \\ 10000 & \text{otherwise} \end{cases} \qquad \min(MSsu) = 4.67$$

Minimum margin occurs on element 1221, for load case 1016

$$info := \left(csort\left(augment\left(ID, LC, MSsu, \frac{Pa}{1 \cdot lbf}, \frac{V1a}{1 \cdot lbf}, \frac{V2a}{1 \cdot lbf}, \frac{Toa}{1 \cdot in \cdot lbf}, \frac{My}{1 \cdot in \cdot lbf}, \frac{Mz}{1 \cdot in \cdot lbf}\right), 3\right)^T\right)^{\langle 1 \rangle^T}$$

$$info = (1221 \;\; 1016 \;\; 4.67 \;\; 40763.95 \;\; -1097.19 \;\; -74.01 \;\; 11231.41 \;\; 3227.53 \;\; 17168.57)$$

Yield
(using von-Mises)

$$MSy_i := \begin{cases} \left(\dfrac{F_{ty1.a}}{FS_y \cdot \sigma vm_i}\right) - 1 & \text{if } \sigma vm_i \neq 0 \cdot psi \\ 10000 & \text{otherwise} \end{cases} \qquad \min(MSy) = 4.01$$

Minimum margin occurs on element 1221, for load case 1016

$$info := \left(csort\left(augment\left(ID, LC, MSy, \frac{Pa}{1 \cdot lbf}, \frac{V1a}{1 \cdot lbf}, \frac{V2a}{1 \cdot lbf}, \frac{Toa}{1 \cdot in \cdot lbf}, \frac{My}{1 \cdot in \cdot lbf}, \frac{Mz}{1 \cdot in \cdot lbf}\right), 3\right)^T\right)^{\langle 1 \rangle^T}$$

$$info = (1221 \;\; 1016 \;\; 4.01 \;\; 40763.95 \;\; -1097.19 \;\; -74.01 \;\; 11231.41 \;\; 3227.53 \;\; 17168.57)$$

Stresses for Launch (upper beam forces):

$load := READPRN("beamLoads.Top.1k.txt")$ $\quad i := 1..rows(load)$

Node ID: $ID := load^{\langle 1 \rangle}$ Load case number: $LC := load^{\langle 2 \rangle}$

+ MPC forces acting on the joint:

Moment: $Mxmpc := load^{\langle 6 \rangle} \cdot in \cdot lbf$ $\quad Mympc := load^{\langle 7 \rangle} \cdot in \cdot lbf$

Shear force: $Vx := load^{\langle 3 \rangle} \cdot lbf$ $\quad Vy := load^{\langle 4 \rangle} \cdot lbf$

Axial force: $Pz := load^{\langle 5 \rangle} \cdot lbf$ Total torque: $Tz := load^{\langle 8 \rangle} \cdot in \cdot lbf$

Total Bending:

$Mx_i := \left| Mxmpc_i - Vy_i \cdot dCant_T \right|$ $\quad max(Mx) = 61694 in \cdot lbf$

$My_i := \left| Mympc_i + Vx_i \cdot dCant_T \right|$ $\quad max(My) = 21524 in \cdot lbf$

Axial Stress:

Stresses on cross section:

Normal is direct axial plus bending: (Conservative)

Tension:

$$\sigma t_i := \left| \frac{Pz_i}{ATop} \right| \qquad max(\sigma t) = 5279 psi$$

Bending:

$$\sigma b_i := \left| \frac{Mx_i \cdot cTop}{IntTop} \right| + \left| \frac{My_i \cdot cTop}{IntTop} \right| \qquad max(\sigma b) = 7898 psi$$

Tension plus bending:

$$\sigma_i := \sigma t_i + \sigma b_i \qquad max(\sigma) = 11427 psi$$

Shear Stress:

Shear due to transverse loading: $\tau v_i := \sqrt{\left(\frac{Vx_i}{ATop}\right)^2 + \left(\frac{Vy_i}{ATop}\right)^2}$ $\max(\tau v) = 5025psi$

Shear due to torsion (conservative): $\tau t_i := \frac{\left|Tz_i\right|}{2 \cdot tTop \cdot (bTop - tTop) \cdot (dTop - tTop)}$ $\max(\tau t) = 967psi$

tt from Roark's 6th, p352, Table 20, Case 16, Avg. Shear stress

Combined shear: $\tau_i := \tau v_i + \tau t_i$ $\max(\tau) = 5610psi$

Principal Stresses: $\sigma p_{i,1} := \frac{\sigma_i}{2} + \left[\left(\frac{\sigma_i}{2}\right)^2 + (\tau_i)^2\right]^{\frac{1}{2}}$ $\max(\sigma p) = 12830psi$

$\sigma p_{i,2} := \frac{\sigma_i}{2} - \left[\left(\frac{\sigma_i}{2}\right)^2 + (\tau_i)^2\right]^{\frac{1}{2}}$ $\min(\sigma p) = -2657psi$

Maximum principal stress is:

$$\sigma max_i := \begin{cases} \sigma p_{i,1} & \text{if } \left|\sigma p_{i,1}\right| \geq \left|\sigma p_{i,2}\right| \\ \sigma p_{i,2} & \text{otherwise} \end{cases}$$

Von-Mises Stress: $\sigma vm_i := \sqrt{(\sigma p_{i,1})^2 + (\sigma p_{i,2})^2 - \sigma p_{i,1} \cdot \sigma p_{i,2}}$ $\max(\sigma vm) = 13586psi$

Maximum shear: $\tau max_i := \sqrt{\frac{1}{4} \cdot (\sigma_i)^2 + (\tau_i)^2}$ $\max(\tau max) = 7276psi$

Margins of safety:

Ultimate

$$MSu_i := \begin{cases} \left(\dfrac{F_{tu1.a}}{FS_u \cdot \sigma max_i}\right) - 1 & \text{if } \sigma max_i \neq 0 \cdot psi \\ 10000 & \text{otherwise} \end{cases} \qquad \min(MSu) = 2.49$$

Minimum margin occurs on node 1215, for load case 1019

$$info := \left(csort\left(augment\left(ID, LC, MSu, \frac{Pz}{1 \cdot lbf}, \frac{Vx}{1 \cdot lbf}, \frac{Vy}{1 \cdot lbf}, \frac{Tz}{1 \cdot in \cdot lbf}, \frac{Mx}{1 \cdot in \cdot lbf}, \frac{My}{1 \cdot in \cdot lbf}\right), 3\right)^T\right)^{\langle 1 \rangle^T}$$

$$info = (1215 \;\; 1019 \;\; 2.49 \;\; -22360.58 \;\; -1385.22 \;\; -22666.66 \;\; -4043.62 \;\; 56924.24 \;\; 20662.32)$$

Ultimate, shear

$$MSsu_i := \begin{cases} \left(\dfrac{F_{su1.a}}{FS_u \cdot \tau max_i}\right) - 1 & \text{if } \tau max_i \neq 0 \cdot psi \\ 10000 & \text{otherwise} \end{cases} \qquad \min(MSsu) = 3.01$$

Minimum margin occurs on node 1201, for load case 1015

$$info := \left(csort\left(augment\left(ID, LC, MSsu, \frac{Pz}{1 \cdot lbf}, \frac{Vx}{1 \cdot lbf}, \frac{Vy}{1 \cdot lbf}, \frac{Tz}{1 \cdot in \cdot lbf}, \frac{Mx}{1 \cdot in \cdot lbf}, \frac{My}{1 \cdot in \cdot lbf}\right), 3\right)^T\right)^{\langle 1 \rangle^T}$$

$$info = (1201 \;\; 1015 \;\; 3.01 \;\; 30026.48 \;\; -1038.87 \;\; 28565.73 \;\; 8828.72 \;\; 35295.12 \;\; 6935.2)$$

Yield
(using von-Mises)

$$MSy_i := \begin{cases} \left(\dfrac{F_{ty1.a}}{FS_y \cdot \sigma vm_i}\right) - 1 & \text{if } \sigma vm_i \neq 0 \cdot psi \\ 10000 & \text{otherwise} \end{cases} \qquad \min(MSy) = 2.78$$

Minimum margin occurs on node 1215, for load case 1019

$$info := \left(csort\left(augment\left(ID, LC, MSy, \frac{Pz}{1 \cdot lbf}, \frac{Vx}{1 \cdot lbf}, \frac{Vy}{1 \cdot lbf}, \frac{Tz}{1 \cdot in \cdot lbf}, \frac{Mx}{1 \cdot in \cdot lbf}, \frac{My}{1 \cdot in \cdot lbf}\right), 3\right)^T\right)^{\langle 1 \rangle^T}$$

$$info = (1215 \;\; 1019 \;\; 2.78 \;\; -22360.58 \;\; -1385.22 \;\; -22666.66 \;\; -4043.62 \;\; 56924.24 \;\; 20662.32)$$

Stresses for Abort (lower beam forces):

$load := READPRN("beamLoads.Bot.2k.txt")$ $\quad i := 1..rows(load)$

Element ID: $ID := load^{\langle 1 \rangle}$ Load case number: $LC := load^{\langle 2 \rangle}$

+ At end A of beam element:

Moment: $M1a := load^{\langle 3 \rangle} \cdot in \cdot lbf$ $\quad M2a := load^{\langle 4 \rangle} \cdot in \cdot lbf$

Shear force: $V1a := load^{\langle 5 \rangle} \cdot lbf$ $\quad V2a := load^{\langle 6 \rangle} \cdot lbf$

Axial force: $Pa := load^{\langle 7 \rangle} \cdot lbf$ Total torque: $Toa := load^{\langle 8 \rangle} \cdot in \cdot lbf$

Total Bending:

$My_i := \left| -M2a_i - V2a_i \cdot dCant_B \right|$ $\quad max(My) = 23413 in \cdot lbf$

$Mz_i := \left| M1a_i + V1a_i \cdot dCant_B \right|$ $\quad max(Mz) = 16697 in \cdot lbf$

Axial Stress:

Stresses on cross section:

Normal is direct axial plus bending: (Conservative)

Tension:

$$\sigma t_i := \frac{Pa_i}{ABot} \qquad max(\sigma t) = 5279 psi$$

Bending:

$$\sigma b_i := \left| \frac{My_i \cdot cBot}{IntBot} \right| + \left| \frac{Mz_i \cdot cBot}{IntBot} \right| \qquad max(\sigma b) = 7898 psi$$

Tension plus bending:

$$\sigma_i := \sigma t_i + \sigma b_i \qquad max(\sigma) = 11427.21 psi$$

Shear Stress:

Shear due to transverse loading:

$$\tau v_i := \sqrt{\left(\frac{V1a_i}{ABot}\right)^2 + \left(\frac{V2a_i}{ABot}\right)^2} \qquad \max(\tau v) = 298psi$$

Shear due to torsion (conservative):

$$\tau t_i := \frac{\left|Toa_i\right|}{2 \cdot tBot \cdot (bBot - tBot) \cdot (dBot - tBot)} \qquad \max(\tau t) = 480psi$$

tt from Roark's 6th, p352, Table 20, Case 16, Avg. Shear stress

Combined shear:

$$\tau_i := \tau v_i + \tau t_i \qquad \max(\tau) = 674psi$$

Principal Stresses:

$$\sigma p_{i,1} := \frac{\sigma_i}{2} + \left[\left(\frac{\sigma_i}{2}\right)^2 + (\tau_i)^2\right]^{\frac{1}{2}} \qquad \max(\sigma p) = 11390psi$$

$$\sigma p_{i,2} := \frac{\sigma_i}{2} - \left[\left(\frac{\sigma_i}{2}\right)^2 + (\tau_i)^2\right]^{\frac{1}{2}} \qquad \min(\sigma p) = -3024psi$$

Maximum principal stress is:

$$\sigma max_i := \begin{cases} \left|\sigma p_{i,1}\right| & \text{if } \left|\sigma p_{i,1}\right| \geq \left|\sigma p_{i,2}\right| \\ \left|\sigma p_{i,2}\right| & \text{otherwise} \end{cases}$$

Von-Mises Stress:

$$\sigma vm_i := \sqrt{(\sigma p_{i,1})^2 + (\sigma p_{i,2})^2 - \sigma p_{i,1} \cdot \sigma p_{i,2}} \qquad \max(\sigma vm) = 11401psi$$

Maximum shear:

$$\tau max_i := \sqrt{\frac{1}{4} \cdot (\sigma_i)^2 + (\tau_i)^2} \qquad \max(\tau max) = 5706psi$$

Margins of safety:

Ultimate

$$MSu_i := \begin{cases} \left(\dfrac{F_{tu2.a}}{FS_u \cdot \sigma max_i}\right) - 1 & \text{if } \sigma max_i \neq 0 \cdot psi \\ 10000 & \text{otherwise} \end{cases} \qquad \min(MSu) = 2.77$$

Minimum margin occurs on element 1221, for load case 2016

$$info := \left(csort\left(augment\left(ID, LC, MSu, \frac{Pa}{1 \cdot lbf}, \frac{V1a}{1 \cdot lbf}, \frac{V2a}{1 \cdot lbf}, \frac{Toa}{1 \cdot in \cdot lbf}, \frac{My}{1 \cdot in \cdot lbf}, \frac{Mz}{1 \cdot in \cdot lbf}\right), 3\right)^T\right)^{\langle 1 \rangle^T}$$

$$info = (1221 \;\; 2016 \;\; 2.77 \;\; 47589.96 \;\; -723.31 \;\; 617.85 \;\; 4485.55 \;\; 10244.24 \;\; 9993.11)$$

Ultimate, shear

$$MSsu_i := \begin{cases} \left(\dfrac{F_{su2.a}}{FS_u \cdot \tau max_i}\right) - 1 & \text{if } \tau max_i \neq 0 \cdot psi \\ 10000 & \text{otherwise} \end{cases} \qquad \min(MSsu) = 3.9$$

Minimum margin occurs on element 1221, for load case 2016

$$info := \left(csort\left(augment\left(ID, LC, MSsu, \frac{Pa}{1 \cdot lbf}, \frac{V1a}{1 \cdot lbf}, \frac{V2a}{1 \cdot lbf}, \frac{Toa}{1 \cdot in \cdot lbf}, \frac{My}{1 \cdot in \cdot lbf}, \frac{Mz}{1 \cdot in \cdot lbf}\right), 3\right)^T\right)^{\langle 1 \rangle^T}$$

$$info = (1221 \;\; 2016 \;\; 3.9 \;\; 47589.96 \;\; -723.31 \;\; 617.85 \;\; 4485.55 \;\; 10244.24 \;\; 9993.11)$$

Yield
(using von-Mises)

$$MSy_i := \begin{cases} \left(\dfrac{F_{ty2.a}}{FS_y \cdot \sigma vm_i}\right) - 1 & \text{if } \sigma vm_i \neq 0 \cdot psi \\ 10000 & \text{otherwise} \end{cases} \qquad \min(MSy) = 3.41$$

Minimum margin occurs on element 1221, for load case 2016

$$info := \left(csort\left(augment\left(ID, LC, MSy, \frac{Pa}{1 \cdot lbf}, \frac{V1a}{1 \cdot lbf}, \frac{V2a}{1 \cdot lbf}, \frac{Toa}{1 \cdot in \cdot lbf}, \frac{My}{1 \cdot in \cdot lbf}, \frac{Mz}{1 \cdot in \cdot lbf}\right), 3\right)^T\right)^{\langle 1 \rangle^T}$$

$$info = (1221 \;\; 2016 \;\; 3.41 \;\; 47589.96 \;\; -723.31 \;\; 617.85 \;\; 4485.55 \;\; 10244.24 \;\; 9993.11)$$

Stresses for Abort (upper beam forces):

$load := READPRN("beamLoads.Top.2k.txt")$ $\quad i := 1..rows(load)$

Node ID: $ID := load^{\langle 1 \rangle}$ Load case number: $LC := load^{\langle 2 \rangle}$

+ MPC forces acting on the joint:

Moment: $Mxmpc := load^{\langle 6 \rangle} \cdot in \cdot lbf$ $\quad Mympc := load^{\langle 7 \rangle} \cdot in \cdot lbf$

Shear force: $Vx := load^{\langle 3 \rangle} \cdot lbf$ $\quad Vy := load^{\langle 4 \rangle} \cdot lbf$

Axial force: $Pz := load^{\langle 5 \rangle} \cdot lbf$ Total torque: $Tz := load^{\langle 8 \rangle} \cdot in \cdot lbf$

Total Bending:

$$Mx_i := \left| Mxmpc_i - Vy_i \cdot dCant_T \right| \qquad max(Mx) = 60233 in \cdot lbf$$

$$My_i := \left| Mympc_i + Vx_i \cdot dCant_T \right| \qquad max(My) = 16873 in \cdot lbf$$

Axial Stress:

Stresses on cross section:

Normal is direct axial plus bending: (Conservative)

Tension:

$$\sigma t_i := \left| \frac{Pz_i}{ATop} \right| \qquad max(\sigma t) = 6067 psi$$

Bending:

$$\sigma b_i := \left| \frac{Mx_i \cdot cTop}{IntTop} \right| + \left| \frac{My_i \cdot cTop}{IntTop} \right| \qquad max(\sigma b) = 6704 psi$$

Tension plus bending:

$$\sigma_i := \sigma t_i + \sigma b_i \qquad max(\sigma) = 11908 psi$$

Shear Stress:

Shear due to transverse loading: $\tau v_i := \sqrt{\left(\frac{Vx_i}{ATop}\right)^2 + \left(\frac{Vy_i}{ATop}\right)^2}$ $\max(\tau v) = 5937psi$

Shear due to torsion (conservative): $\tau t_i := \frac{\left|Tz_i\right|}{2 \cdot tTop \cdot (bTop - tTop) \cdot (dTop - tTop)}$ $\max(\tau t) = 572psi$

tt from Roark's 6th, p352, Table 20, Case 16, Avg. Shear stress

Combined shear: $\tau_i := \tau v_i + \tau t_i$ $\max(\tau) = 6111psi$

Principal Stresses: $\sigma p_{i,1} := \frac{\sigma_i}{2} + \left[\left(\frac{\sigma_i}{2}\right)^2 + (\tau_i)^2\right]^{\frac{1}{2}}$ $\max(\sigma p) = 14423psi$

$\sigma p_{i,2} := \frac{\sigma_i}{2} - \left[\left(\frac{\sigma_i}{2}\right)^2 + (\tau_i)^2\right]^{\frac{1}{2}}$ $\min(\sigma p) = -2604psi$

Maximum principal stress is:

$$\sigma max_i := \begin{cases} \sigma p_{i,1} & \text{if } \left|\sigma p_{i,1}\right| \geq \left|\sigma p_{i,2}\right| \\ \sigma p_{i,2} & \text{otherwise} \end{cases}$$

Von-Mises Stress: $\sigma vm_i := \sqrt{(\sigma p_{i,1})^2 + (\sigma p_{i,2})^2 - \sigma p_{i,1} \cdot \sigma p_{i,2}}$ $\max(\sigma vm) = 15832psi$

Maximum shear: $\tau max_i := \sqrt{\frac{1}{4} \cdot (\sigma_i)^2 + (\tau_i)^2}$ $\max(\tau max) = 8474psi$

Margins of safety:

Ultimate

$$MSu_i := \begin{cases} \left(\dfrac{F_{tu2.a}}{FS_u \cdot \sigma max_i}\right) - 1 & \text{if } \sigma max_i \neq 0 \cdot psi \\ 10000 & \text{otherwise} \end{cases} \qquad \min(MSu) = 1.97$$

Minimum margin occurs on element 1201, for load case 2015

$$info := \left(csort\left(augment\left(ID, LC, MSu, \frac{Pz}{1 \cdot lbf}, \frac{Vx}{1 \cdot lbf}, \frac{Vy}{1 \cdot lbf}, \frac{Tz}{1 \cdot in \cdot lbf}, \frac{Mx}{1 \cdot in \cdot lbf}, \frac{My}{1 \cdot in \cdot lbf}\right), 3\right)^T\right)^{\langle 1 \rangle^T}$$

$$info = (1201 \;\; 2015 \;\; 1.97 \;\; 34510.16 \;\; -560.21 \;\; 33767.12 \;\; 1393.29 \;\; 56594.78 \;\; 3859.31)$$

Ultimate, shear

$$MSsu_i := \begin{cases} \left(\dfrac{F_{su2.a}}{FS_u \cdot \tau max_i}\right) - 1 & \text{if } \tau max_i \neq 0 \cdot psi \\ 10000 & \text{otherwise} \end{cases} \qquad \min(MSsu) = 2.3$$

Minimum margin occurs on node 1201, for load case 2016

$$info := \left(csort\left(augment\left(ID, LC, MSsu, \frac{Pz}{1 \cdot lbf}, \frac{Vx}{1 \cdot lbf}, \frac{Vy}{1 \cdot lbf}, \frac{Tz}{1 \cdot in \cdot lbf}, \frac{Mx}{1 \cdot in \cdot lbf}, \frac{My}{1 \cdot in \cdot lbf}\right), 3\right)^T\right)^{\langle 1 \rangle^T}$$

$$info = (1201 \;\; 2016 \;\; 2.3 \;\; 34114.51 \;\; -767.79 \;\; 33316.2 \;\; 4087.13 \;\; 56333.2 \;\; 3103.02)$$

Yield
(using von-Mises)

$$MSy_i := \begin{cases} \left(\dfrac{F_{ty2.a}}{FS_y \cdot \sigma vm_i}\right) - 1 & \text{if } \sigma vm_i \neq 0 \cdot psi \\ 10000 & \text{otherwise} \end{cases} \qquad \min(MSy) = 2.17$$

Minimum margin occurs on node 1201, for load case 2015

$$info := \left(csort\left(augment\left(ID, LC, MSy, \frac{Pz}{1 \cdot lbf}, \frac{Vx}{1 \cdot lbf}, \frac{Vy}{1 \cdot lbf}, \frac{Tz}{1 \cdot in \cdot lbf}, \frac{Mx}{1 \cdot in \cdot lbf}, \frac{My}{1 \cdot in \cdot lbf}\right), 3\right)^T\right)^{\langle 1 \rangle^T}$$

$$info = (1201 \;\; 2015 \;\; 2.17 \;\; 34510.16 \;\; -560.21 \;\; 33767.12 \;\; 1393.29 \;\; 56594.78 \;\; 3859.31)$$

2.1.8 Lower Trunnion Bridge Beam Assembly

Lower Trunnion Bridge Beam

Buckling Analysis:

Since part is a slender beam with compressive loads, buckling is critical.

In Finite Element Model of USS-02 version 2-04 shown in Figure 2.1.8-1, Lower Trunnion Bridge Beam includes Element Ids of 1201-1203, 1204-1206, 1207-1209, and1210-1212. These elements has Property Id of 1007.

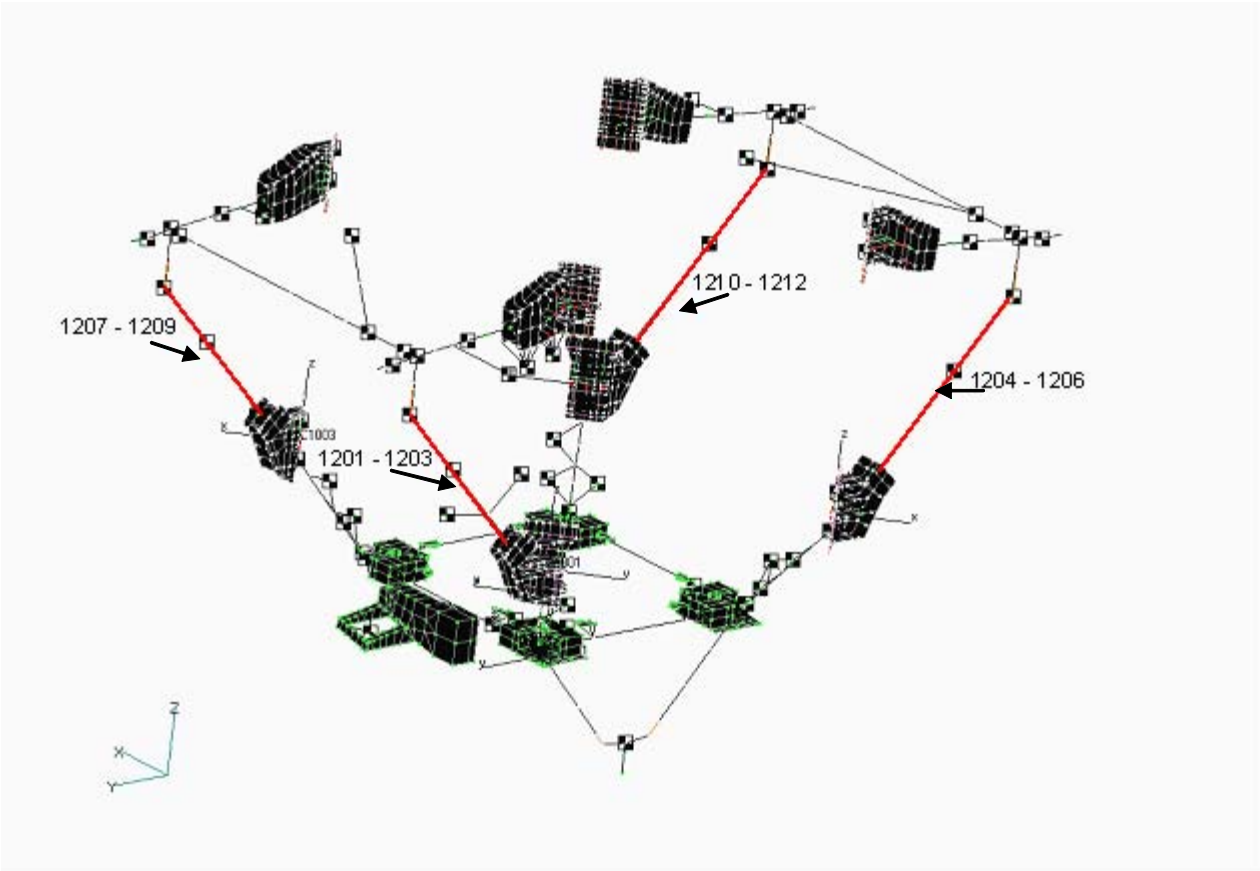

Figure 2.1.8-1: Lower Trunnion Bridge Beam shown in 2-04 Loads Model

Prepared By	Name	Date	Engineering and Science Contract Group	File Name
	Brent Dyer	02/22/06		LTBB-bklg.mcd
Checked By	C. Bala		*Structural Analysis Section*	Drawing No. SDG39135735
Title	USS-02 Lower Trunnion Bridge Beam			

Factor of Safety,ultimate: $FSu := 1.4$

Factor of Safety,yield: $FSy := 1.1$

Material: AL 7075-T73511

(Ref. MIL-HDBK-5J, Table 3.7.6.0(g_2), Thickness: 0.250-0.499)

Compressive modulus, $Ec := 10700000 \cdot psi$

Ultimate tensile strength, $ftu := 68000 \cdot psi$

Tensile yield strength, $fty := 57000 \cdot psi$

Compression yield strength, $fcy := 60000 \cdot psi$

Ultimate shear strength, $fsu := 38000 \cdot psi$

Temp. correction factor, ult & yield:
(Ref. MIL-HDBK-5J, fig.3.7.6.1.1(c) & (d), fig.3.7.6.1.4, and Appendix C2)

Maximum Temperature occurs during abort landing

$Tmax := 150 \cdot deg$

Temperature correction factor, ultimate: $ctu := 0.94$

Temperature correction factor, yield: $cty := .96$

Temperature correction factor, Ec: $cec := .98$

Section: 4.938" x 4.938" x 0.3125" Tube *(Ref. Dwg# SDG39135735)*

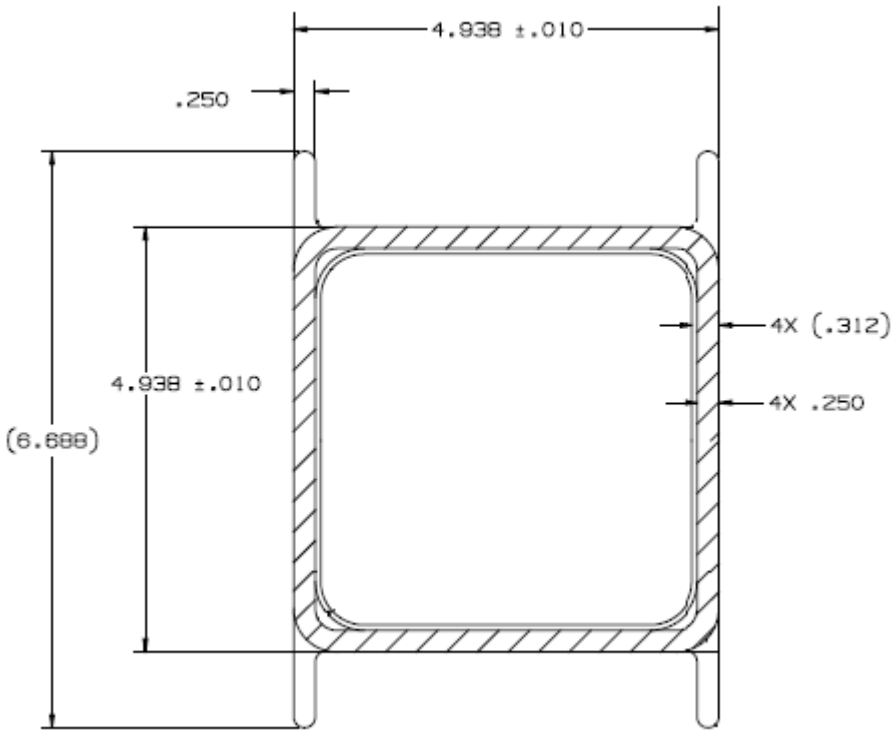

Shape Factor, $f := 1.22$ *(Ref. Structural Engineering Handbook, 4th Edition, Table 7, p.11-15)*

Supported length, $L := 40.50 \cdot in$

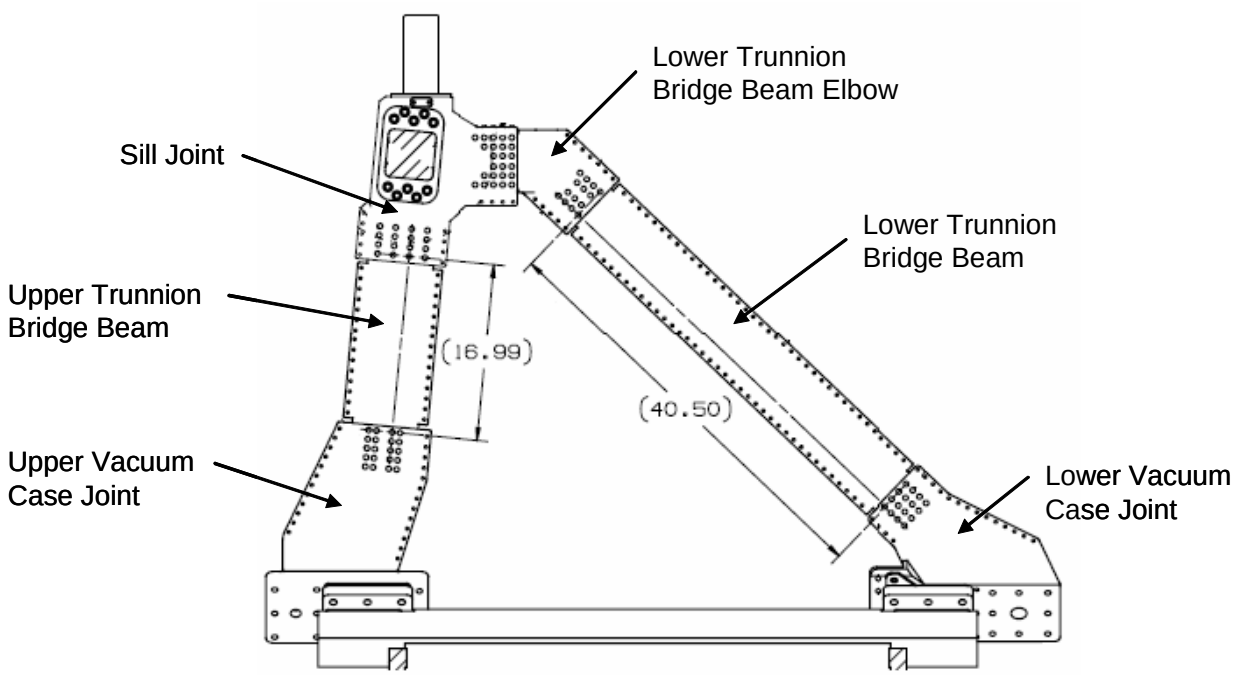

Properties of cross-section: *(Ref. Table 2.1.8-1)*

Width, $Dy := 4.938 \cdot in$

For torsional calculation, use: $Dytor := 4.938 \cdot in$

Depth, $Dz := 4.938 \cdot in$

For torsional calculation, use: $Dztor := 4.938 \cdot in$

Thickness, $t := 0.3125 \cdot in$

Define: $b := 2 \cdot t$

Area, $A := 5.782 \cdot in^2$

Moment of Inertia, $Iy := 20.712 \cdot in^4$

$Iz := 20.712 \cdot in^4$

First moments, $Qy := 5.022 \cdot in^3$

$Qz := 5.022 \cdot in^3$

Table 2.1.8-1a: Property about Y-Y axis

Portion	b	d	Area, A	z	Az	Az^2	Icy	Iy'
1	4.9380	0.3125	1.5431	4.7818	7.3788	35.2838	0.0126	35.2963
2	0.3125	4.3130	1.3478	2.4690	3.3277	8.2162	2.0893	10.3055
3	4.9380	0.3125	1.5431	0.1563	0.2411	0.0377	0.0126	0.0502
4	0.3125	4.3130	1.3478	2.4690	3.3277	8.2162	2.0893	10.3055
Sum		**A=**	**5.782**		14.2754			55.9576

z_bar= 2.469

Iyy= 20.712

Table 2.1.8-1b: Property about Z-Z axis

Portion	b	d	Area, A	y	Ay	Ay^2	Icz	Iz'
1	0.3125	4.9380	1.5431	2.4690	3.8100	9.4068	3.1356	12.5424
2	4.3130	0.3125	1.3478	4.7818	6.4449	30.8179	0.0110	30.8289
3	0.3125	4.9380	1.5431	2.4690	3.8100	9.4068	3.1356	12.5424
4	4.3130	0.3125	1.3478	0.1563	0.2106	0.0329	0.0110	0.0439
Sum		**A=**	**5.782**		14.2754			55.9576

y_bar= 2.469

Izz= 20.712

Table 2.1.8-1c: First Moment about Y-Y axis

Portion	b	d	Area, A	z	Qyy
1	4.9380	0.3125	1.543125	2.3128	3.5689
2	0.3125	2.1565	0.67390625	1.0783	0.7266
4	0.3125	2.1565	0.67390625	1.0783	0.7266
Sum				**Qyy=**	**5.022**

Table 2.1.8-1d: First Moment about Z-Z axis

Portion	b	d	Area, A	y	Qzz
1	0.3125	2.4690	0.7715625	1.2345	0.9525
2	4.3130	0.3125	1.3478125	2.3128	3.1172
3	0.3125	2.4690	0.7715625	1.2345	0.9525
Sum				**Qzz=**	**5.022**

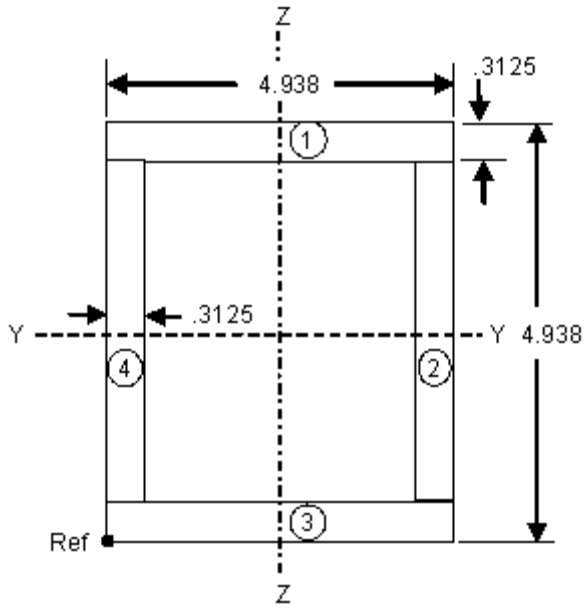

Section modulus, $Sy := \dfrac{Iy}{\frac{1}{2}\cdot Dz}$ $\quad Sy = 8.389\ in^3$

$Sz := \dfrac{Iz}{\frac{1}{2}\cdot Dy}$ $\quad Sz = 8.389\ in^3$

Torsional constant / distance, $JoR := 2\cdot t\cdot(Dztor - t)\cdot(Dytor - t)$ $\quad JoR = 13.372\ in^3$

Radii of gyration, $ry := \sqrt{\dfrac{Iy}{A}}$ $\quad ry = 1.893\ in$

$rz := \sqrt{\dfrac{Iz}{A}}$ $\quad rz = 1.893\ in$

Fixity coefficient, *(One end fixed, one end free in translation)* $K := 1.2$ *(Ref. Structural Engineering Handbook, 4th Edition, Figure 5, p.8-10)*

Slenderness ratios, $SRy := \dfrac{K\cdot L}{ry}$ $\quad SRy = 25.678$

$SRz := \dfrac{K\cdot L}{rz}$ $\quad SRz = 25.678$

Constants depending upon the mechanical properties of the material from Ref. Structural Engineering Handbook, 4th Edition, Formulas 5a-c, p.11-6:

$$Bc := fcy\cdot cty\cdot\left[1 + \left(\frac{fcy\cdot cty}{2250000\cdot psi}\right)^{\frac{1}{2}}\right] \qquad Bc = 66816\ psi$$

$$Dc := \frac{Bc}{10}\cdot\left(\frac{Bc}{Ec\cdot cec}\right)^{\frac{1}{2}} \qquad Dc = 533\ psi$$

$$Cc := 0.41\cdot\frac{2\cdot Bc}{3\cdot Dc} \qquad Cc = 34.242$$

Compression allowables:

$$Fcy := \begin{cases} Bc - Dc \cdot SRy & \text{if } SRy \le Cc \\ Ec \cdot cec \cdot \left(\frac{\pi}{SRy}\right)^2 & \text{otherwise} \end{cases} \qquad Fcy = 53120\,psi$$

$$Fcz := \begin{cases} Bc - Dc \cdot SRz & \text{if } SRz \le Cc \\ Ec \cdot cec \cdot \left(\frac{\pi}{SRz}\right)^2 & \text{otherwise} \end{cases} \qquad Fcz = 53120\,psi$$

Ref. Structural Engineering Handbook, 4th Edition, p.11-25, defines:

(Note: FSu is used below for moment magnification due to eccentricities.)

$$Fey := \frac{102000000 \cdot psi}{FSu \cdot SRy^2} \qquad Fey = 110495\,psi$$

$$Fez := \frac{102000000 \cdot psi}{FSu \cdot SRz^2} \qquad Fez = 110495\,psi$$

Ultimate shear allowables:

$$Vulty := fsu \cdot ctu \cdot \frac{Iz \cdot b}{Qz} \qquad Vulty = 92074\,lbf$$

$$Vultz := fsu \cdot ctu \cdot \frac{Iy \cdot b}{Qy} \qquad Vultz = 92074\,lbf$$

Ultimate torsion allowable:

$$Tult := fsu \cdot ctu \cdot JoR \qquad Tult = 477649\,in \cdot lbf$$

Axial tensile allowable:

$$Pt := ftu \cdot ctu \cdot A \qquad Pt = 369585\,lbf$$

Axial compression allowable:

$$Pcr := \begin{cases} Fcz \cdot A & \text{if } Fcy \ge Fcz \\ Fcy \cdot A & \text{otherwise} \end{cases} \qquad Pcr = 307142\,lbf$$

Ultimate bending allowables:

$$Multy := Sy \cdot [ftu \cdot ctu + (f - 1) \cdot fty \cdot cty] \qquad Multy = 637201\,in \cdot lbf$$

$$Multz := Sz \cdot [ftu \cdot ctu + (f - 1) \cdot fty \cdot cty] \qquad Multz = 637201\,in \cdot lbf$$

Combined bending and axial allowables:

$$Pey := Fey \cdot A \qquad Pey = 638883\,lbf$$

$$Pez := Fez \cdot A \qquad Pez = 638883\,lbf$$

Input for NASPOST was taken from 192 punch files in three different folders:

/hsm/bsommer/ams/nonlin/1000/2-04
/hsm/bsommer/ams/nonlin/2000/2-04
/hsm/bsommer/ams/nonlin/4000/2-04

MathCAD will read in all the load data from "ltbb.txt" for the calculations below.

$load := READPRN("ltbb.txt")$ $\quad i := 1 .. rows(load)$

Element ID: $ID := load^{\langle 1 \rangle}$ Load case number: $LC := load^{\langle 2 \rangle}$

+ At end A of beam element:

Moment: $M1a := load^{\langle 3 \rangle} \cdot in \cdot lbf$ $\quad M2a := load^{\langle 4 \rangle} \cdot in \cdot lbf$

Shear force: $V1a := load^{\langle 5 \rangle} \cdot lbf$ $\quad V2a := load^{\langle 6 \rangle} \cdot lbf$

Axial force: $Pa := load^{\langle 7 \rangle} \cdot lbf$

Total torque: $Toa := load^{\langle 8 \rangle} \cdot in \cdot lbf$

Warp torque: $Warpa := load^{\langle 9 \rangle} \cdot in \cdot lbf$

+ At end B of beam element:

Moment: $M1b := load^{\langle 10 \rangle} \cdot in \cdot lbf$ $\quad M2b := load^{\langle 11 \rangle} \cdot in \cdot lbf$

Shear force: $V1b := load^{\langle 12 \rangle} \cdot lbf$ $\quad V2b := load^{\langle 13 \rangle} \cdot lbf$

Axial force: $Pb := load^{\langle 14 \rangle} \cdot lbf$

Total torque: $Tob := load^{\langle 15 \rangle} \cdot in \cdot lbf$

Warp torque: $Warpb := load^{\langle 16 \rangle} \cdot in \cdot lbf$

Modify end torque by subtracting warping torque:

$$Ta_i := \left|Toa_i\right| - \left|Warpa_i\right|$$

$$Tb_i := \left|Tob_i\right| - \left|Warpb_i\right|$$

Shear ratios:

$$RSa_i := \frac{\left|V1a_i\right|}{Vulty} + \frac{\left|V2a_i\right|}{Vultz} + \frac{Ta_i}{Tult}$$

$$RSb_i := \frac{\left|V1b_i\right|}{Vulty} + \frac{\left|V2b_i\right|}{Vultz} + \frac{Tb_i}{Tult}$$

Tensile ratio at end A:

$$RTa_i := \begin{cases} \dfrac{\left|Pa_i\right|}{Pt} + \dfrac{\left|M2a_i\right|}{Multy} + \dfrac{\left|M1a_i\right|}{Multz} & \text{if } Pa_i \ge 0\cdot lbf \\ \dfrac{\left|Pa_i\right|}{Pcr} + \dfrac{\left|M2a_i\right|}{Multy}\cdot\dfrac{1}{1-\dfrac{\left|Pa_i\right|}{Pey}} + \dfrac{\left|M1a_i\right|}{Multz}\cdot\dfrac{1}{1-\dfrac{\left|Pa_i\right|}{Pez}} & \text{otherwise} \end{cases}$$

Tensile ratio at end B:

$$RTb_i := \begin{cases} \dfrac{\left|Pb_i\right|}{Pt} + \dfrac{\left|M2b_i\right|}{Multy} + \dfrac{\left|M1b_i\right|}{Multz} & \text{if } Pb_i \ge 0\cdot lbf \\ \dfrac{\left|Pb_i\right|}{Pcr} + \dfrac{\left|M2b_i\right|}{Multy}\cdot\dfrac{1}{1-\dfrac{\left|Pb_i\right|}{Pey}} + \dfrac{\left|M1b_i\right|}{Multz}\cdot\dfrac{1}{1-\dfrac{\left|Pb_i\right|}{Pez}} & \text{otherwise} \end{cases}$$

Combined Ratios:

$$RATIOa_i := \sqrt{\left(RTa_i\right)^2 + \left(RSa_i\right)^2}$$

$$RATIOb_i := \sqrt{\left(RTb_i\right)^2 + \left(RSb_i\right)^2}$$

$$RATIO_i := \text{if}\left(RATIOa_i \ge RATIOb_i, RATIOa_i, RATIOb_i\right)$$

Margin of Safety:

$$MS_i := \frac{1}{RATIO_i\cdot FSu} - 1$$

$\min(MS) = 1.42$

Reference - Buckling Margin of Safety

The worst load case that yielded minimum margin of safety is shown below:

$output := augment(ID, LC, MS)$ $\qquad$ $sorted := csort(output, 3)$

$$\left(sorted^T\right)^{\langle 1 \rangle T} = (1203 \quad 4016 \quad 1.42)$$

Based upon the output of SORT function above, it reads:

Element ID = 1203

Load ID = 4016

MS = 1.42

Beam and Socket Analysis: Lower Trunnion Bridge Beam Elbow Side

The following loop stacks element IDs 1201, 1204, 1207, and 1210 so that the data can be used only on the Elbow side of the beam element. The loop below takes the original data from the "loads" database and pulls out only the data for element IDs 1201, 1204, 1207, and 1210. This includes loads and moments from beam end A and B, although only end A loads and moments are used for the beam and socket analysis.

$rows(load) = 2304$ $\qquad$ $cols(load) = 16$

```
elbowside := | k ← 0
             | for i ∈ 1 .. rows(load)
             |   if load[i,1] = 1201 ∨ load[i,1] = 1204 ∨ load[i,1] = 1207 ∨ load[i,1] = 1210
             |     | k ← k + 1
             |     | newdata⟨k⟩ ← (load^T)⟨i⟩
             | newdata^T
```

Beam and Socket Analysis: Lower Trunnion Bridge Beam Elbow Side (Moment about Y)

Treating the connection as a Beam in a Socket, as per SMM, Memo 41a

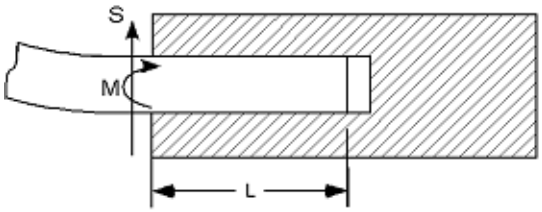

S and M are respectively beam shear in lbf and moment in in-lbf at end of socket. W is unit loading in lbf/in.

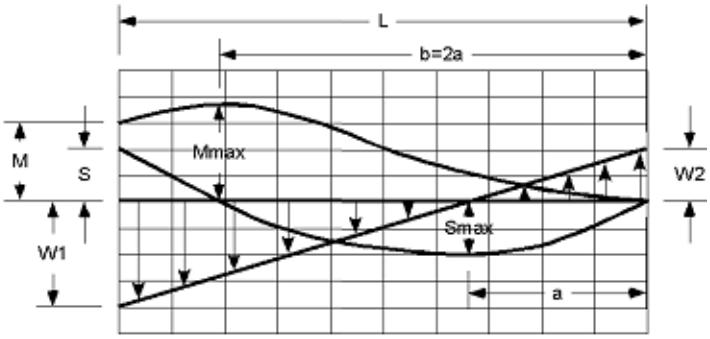

$i := 1 .. \text{rows}(\text{elbowside})$ $\quad \text{rows}(\text{elbowside}) = 768$

$ID1_i := \text{elbowside}_{i,1}$ Element ID

$LC1_i := \text{elbowside}_{i,2}$ Load case number

$S1a_i := \text{elbowside}_{i,5} \cdot \text{lbf}$ $\quad S2a_i := \text{elbowside}_{i,6} \cdot \text{lbf}$ Picking End A Shear from data

$S_i := \sqrt{(S1a_i)^2 + (S2a_i)^2}$ Combined End A Shear

$P_i := \text{elbowside}_{i,7} \cdot \text{lbf}$ Picking End A Tension from data

$M_i := \text{elbowside}_{i,4} \cdot \text{in} \cdot \text{lbf}$ Picking Y Moment from data

$L_i := 4.465 \cdot \text{in}$ Length of beam inside socket

$$\text{mls_ratio}_i := \text{if}\left(S_i = 0, 1000, \frac{M_i}{S_i \cdot L_i}\right) \qquad \text{slm_ratio}_i := \text{if}\left(M_i = 0, 1000, S_i \cdot \frac{L_i}{M_i}\right)$$

Calculated values are then:

$$w1_i := \begin{cases} \dfrac{K1_i \cdot M_i}{(L_i)^2} & \text{if } |slm_ratio_i| \le 1 \\ \dfrac{K1_i \cdot S_i}{L_i} & \text{otherwise} \end{cases} \qquad w2_i := \begin{cases} \dfrac{K2_i \cdot M_i}{(L_i)^2} & \text{if } |slm_ratio_i| \le 1 \\ \dfrac{K2_i \cdot S_i}{L_i} & \text{otherwise} \end{cases}$$

$$a_i := Ka_i \cdot L_i$$

Max. shear

$$Smax_i := \begin{cases} \dfrac{(-Ks)_i \cdot M_i}{L_i} & \text{if } |slm_ratio_i| \le 1 \\ -K2_i \cdot S_i & \text{otherwise} \end{cases}$$

Max. Bending moment

$$Mmax_i := \begin{cases} Km_i \cdot M_i & \text{if } |slm_ratio_i| \le 1 \\ Km_i \cdot S_i \cdot L_i & \text{otherwise} \end{cases}$$

Now check:

$$Sc_i := \frac{w1_i - w2_i}{2} \cdot L_i$$

$$Mc_i := \frac{(-w1)_i + 2 \cdot w2_i}{6} \cdot (L_i)^2$$

Percent error:

$$S_percentdiff_i := \frac{S_i - Sc_i}{S_i}$$

$$M_percentdiff_i := \frac{M_i - Mc_i}{M_i}$$

To view graph with a specific load case, assign j a value $j := 569$

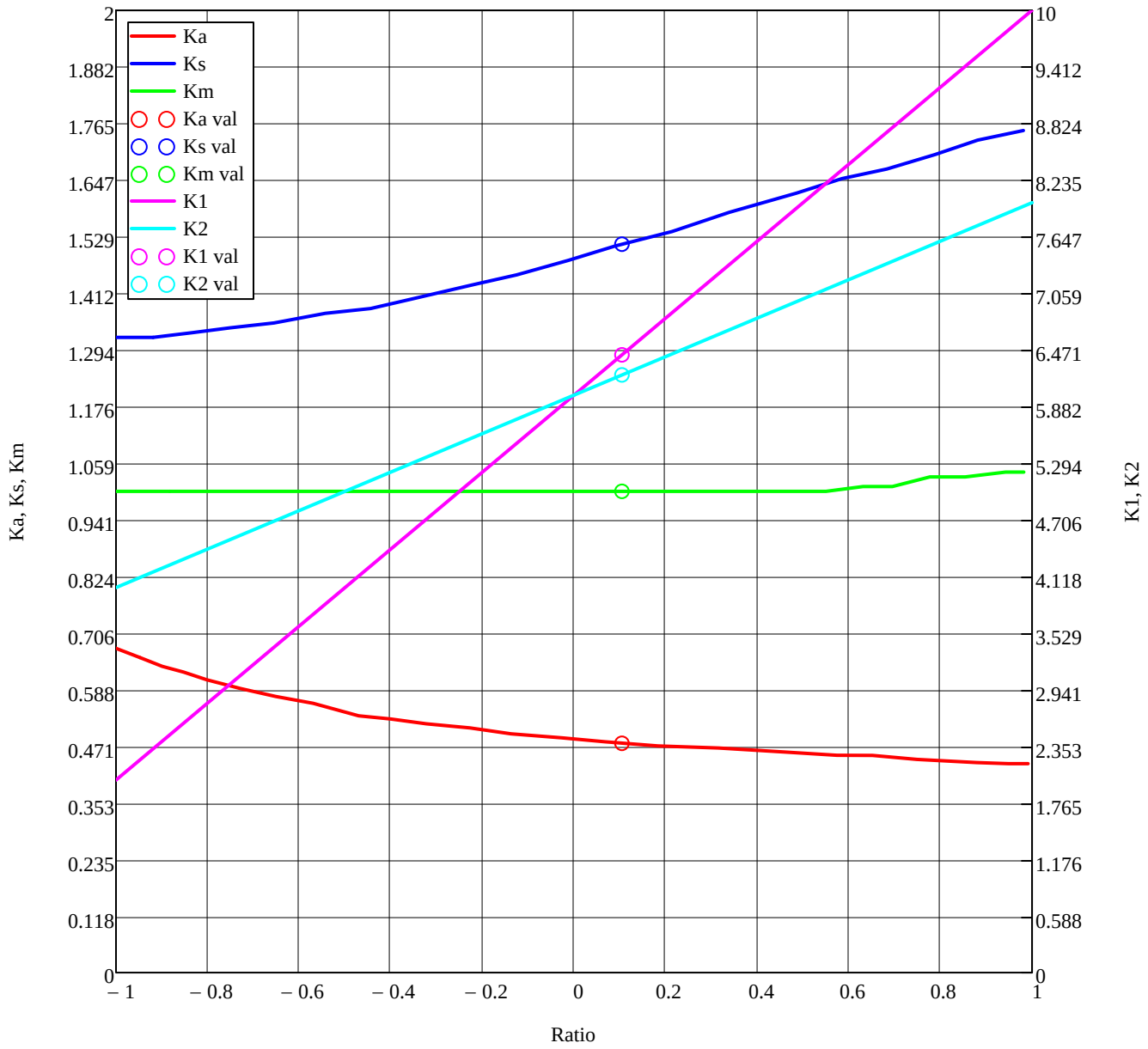

Beam and Socket Coefficients
Note if abs(SL/M) <= 1, Ratio = SL/M, otherwise Ratio = M/SL.

For this specific load case,

$S_j = 965\ \text{lbf}$

$M_j = 41177\ \text{in}\cdot\text{lbf}$

Max Shear: $Smax_j = -13960\ \text{lbf}$ Shear Check: $Sc_j = 965.1\ \text{lbf}$

Max moment: $Mmax_j = 41177\ \text{in}\cdot\text{lbf}$ Moment Check: $M_j = 41177\ \text{in}\cdot\text{lbf}$

With percent error $S_percentdiff_j = -0\ \%$

$M_percentdiff_j = 0\ \%$

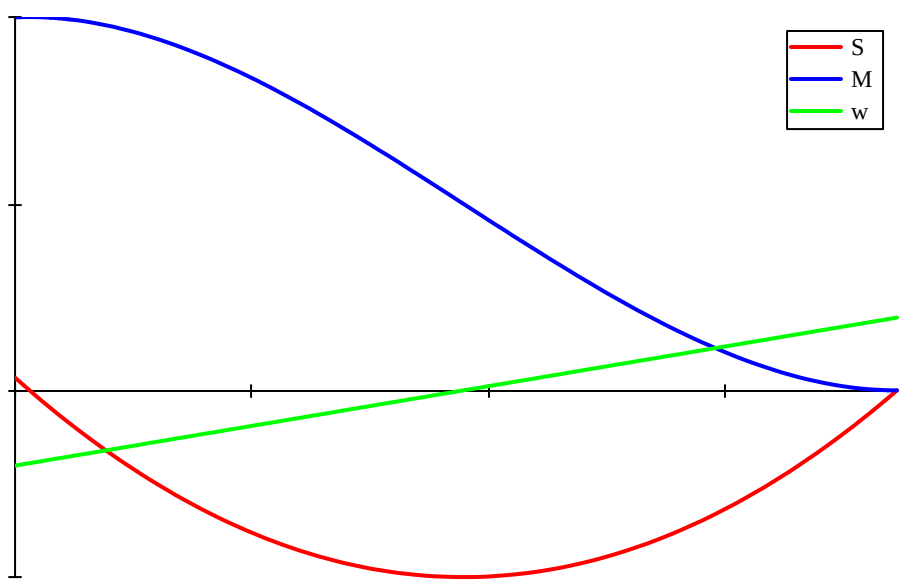

Actual Shear and Moment Distribution Inside Socket

Stresses

Total moment

Bending Tensile stress $\sigma_i := \frac{Mmax_i}{Sy}$ $\max(\sigma) = 5993.6\ psi$

Shear stress $\tau soc_i := \frac{|Smax_i|}{A}$ $\max(\tau soc) = 2959.5\ psi$

Axial tension stress $\sigma a_i := \frac{P_i}{A}$ $\max(\sigma a) = 10287.8\ psi$

Stress Ratios

Axial (ult) $Ra := \frac{\sigma a \cdot FSu}{ftu \cdot ctu}$

Bending (ult) $Rb := \frac{FSu \cdot \sigma}{ftu \cdot ctu}$

Shear (ult) $Rs := \frac{FSu \cdot \tau soc}{fsu \cdot ctu}$

Axial (yld) $Ray := \frac{\sigma a \cdot FSy}{fty \cdot cty}$

Bending (yld) $Rby := \frac{FSy \cdot \sigma}{fty \cdot cty}$

Shear(yld) $Rsy := \frac{FSy \cdot \tau soc}{fty \cdot cty}$

Margins of safety

Margin of safety ultimate $MS1u := \frac{1}{\sqrt{(Ra + Rb)^2 + Rs^2}} - 1$ $\min(MS1u) = 1.87$

Margin of safety yield $MS1y := \frac{1}{\sqrt{(Ray + Rby)^2 + Rsy^2}} - 1$ $\min(MS1y) = 2.22$

Reference - Beam and Socket Margin of Safety - Lower Trunnion Bridge Beam Elbow Side - Moment Y

See below for the ultimate minimum margin of safety with element and load case information:

$output1 := augment(ID1, LC1, MS1u)$ $\qquad$ $sorted := csort(output1, 3)$

$$\left(sorted^T\right)^{\langle 1 \rangle^T} = (1201 \quad 4016 \quad 1.87)$$

Based upon the output of SORT function above, it reads:

Element ID = 1201

Load ID = 4016

MS1u = 1.87

See below for the yield minimum margin of safety with element and load case information:

$output1 := augment(ID1, LC1, MS1y)$ $\qquad$ $sorted := csort(output1, 3)$

$$\left(sorted^T\right)^{\langle 1 \rangle^T} = (1201 \quad 4016 \quad 2.22)$$

Based upon the output of SORT function above, it reads:

Element ID = 1201

Load ID = 4016

MS1y = 2.22

Beam and Socket Analysis: Lower Trunnion Bridge Beam Elbow Side (Moment about Z)

Treating the connection as a Beam in a Socket, as per SMM, Memo 41a

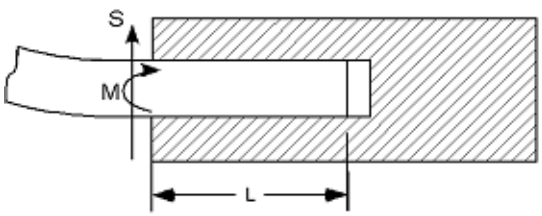

S and M are respectively beam shear in lbf and moment in in-lbf at end of socket. W is unit loading in lbf/in.

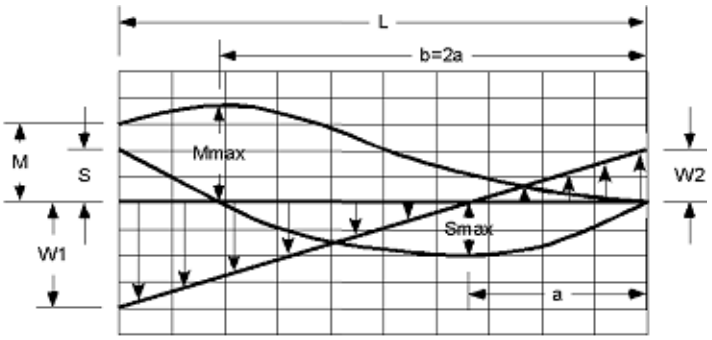

$i := 1 .. \text{rows}(\text{elbowside})$ $\quad \text{rows}(\text{elbowside}) = 768$

$ID2_i := \text{elbowside}_{i,1}$ Element ID

$LC2_i := \text{elbowside}_{i,2}$ Load case number

$S3a_i := \text{elbowside}_{i,5} \cdot \text{lbf}$ $\quad S4a_i := \text{elbowside}_{i,6} \cdot \text{lbf}$ Picking End A Shear from data

$S_i := \sqrt{(S3a_i)^2 + (S4a_i)^2}$ Combined End A Shear

$P_i := \text{elbowside}_{i,7} \cdot \text{lbf}$ Picking End A Tension from data

$M_i := \text{elbowside}_{i,3} \cdot \text{in} \cdot \text{lbf}$ Picking Z Moment from data

$L_i := 4.465 \cdot \text{in}$ Length of beam inside socket

$$\text{mls_ratio}_i := \text{if}\left(S_i = 0, 1000, \frac{M_i}{S_i \cdot L_i}\right) \qquad \text{slm_ratio}_i := \text{if}\left(M_i = 0, 1000, S_i \cdot \frac{L_i}{M_i}\right)$$

Calculated values are then:

$$w1_i := \begin{cases} \dfrac{K1_i \cdot M_i}{(L_i)^2} & \text{if } |slm_ratio_i| \le 1 \\ \dfrac{K1_i \cdot S_i}{L_i} & \text{otherwise} \end{cases} \qquad w2_i := \begin{cases} \dfrac{K2_i \cdot M_i}{(L_i)^2} & \text{if } |slm_ratio_i| \le 1 \\ \dfrac{K2_i \cdot S_i}{L_i} & \text{otherwise} \end{cases}$$

$$a_i := Ka_i \cdot L_i$$

Max. shear

$$Smax_i := \begin{cases} \dfrac{(-Ks)_i \cdot M_i}{L_i} & \text{if } |slm_ratio_i| \le 1 \\ -K2_i \cdot S_i & \text{otherwise} \end{cases}$$

Max. Bending moment

$$Mmax_i := \begin{cases} Km_i \cdot M_i & \text{if } |slm_ratio_i| \le 1 \\ Km_i \cdot S_i \cdot L_i & \text{otherwise} \end{cases}$$

Now check:

$$Sc_i := \frac{w1_i - w2_i}{2} \cdot L_i$$

$$Mc_i := \frac{(-w1)_i + 2 \cdot w2_i}{6} \cdot (L_i)^2$$

Percent error:

$$S_percentdiff_i := \frac{S_i - Sc_i}{S_i}$$

$$M_percentdiff_i := \frac{M_i - Mc_i}{M_i}$$

Prepared By	Name	Date		File Name
	Brent Dyer	02/22/06	**Engineering and Science Contract Group**	LTBB-bklg.mcd
Checked By	C. Bala		*Structural Analysis Section*	Drawing No. SDG39135735
Title	USS-02 Lower Trunnion Bridge Beam			

To view graph with a specific load case, assign j a value $j := 573$

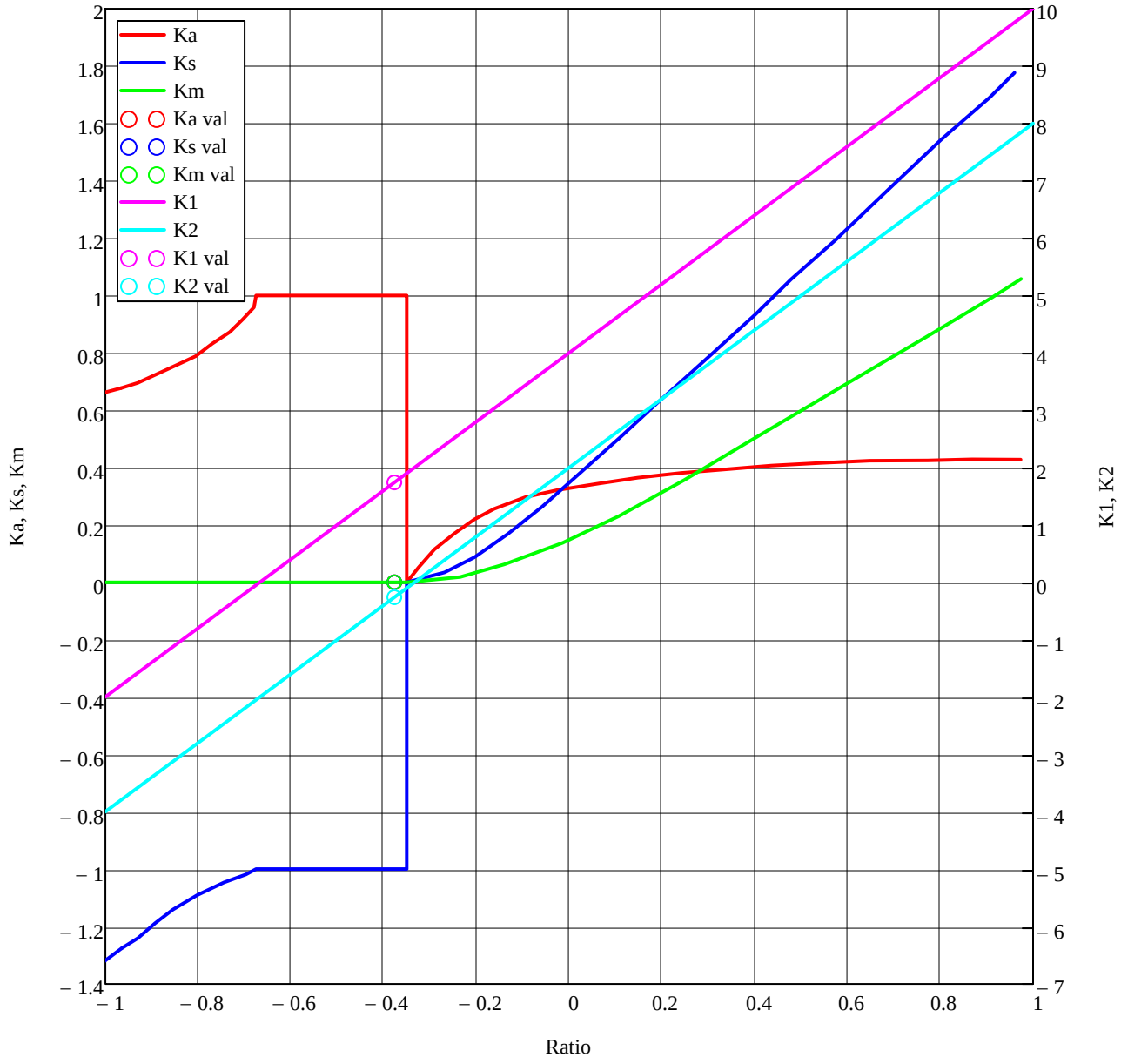

Beam and Socket Coefficients
Note if abs(SL/M) <= 1, Ratio = SL/M, otherwise Ratio = M/SL.

For this specific load case,

$S_j = 1143\,\text{lbf}$

$M_j = -1923\,\text{in}\cdot\text{lbf}$

Max Shear: $Smax_j = 298\,\text{lbf}$

Shear Check: $Sc_j = 1143.3\,\text{lbf}$

Max moment: $Mmax_j = 0\,\text{in}\cdot\text{lbf}$

Moment Check: $M_j = -1923\,\text{in}\cdot\text{lbf}$

With percent error

$S_percentdiff_j = 0\,\%$

$M_percentdiff_j = -0\,\%$

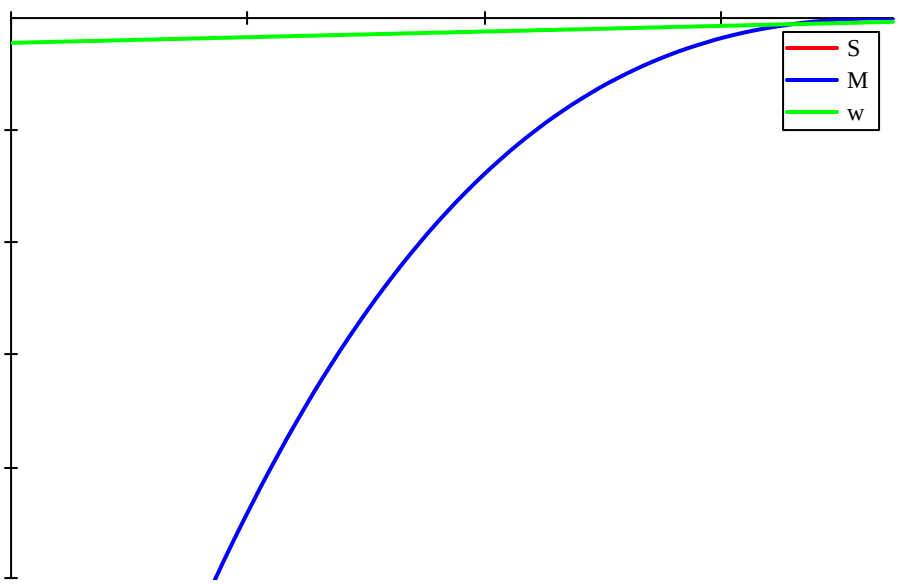

Actual Shear and Moment Distribution Inside Socket

Stresses

Total moment

Bending Tensile stress $\sigma_i := \frac{Mmax_i}{Sz}$ $\max(\sigma) = 1775.1\ psi$

Shear stress $\tau soc_i := \frac{|Smax_i|}{A}$ $\max(\tau soc) = 1978.2\ psi$

Axial tension stress $\sigma a_i := \frac{P_i}{A}$ $\max(\sigma a) = 10287.8\ psi$

Stress Ratios

Axial (ult) $Ra := \frac{\sigma a \cdot FSu}{ftu \cdot ctu}$

Bending (ult) $Rb := \frac{FSu \cdot \sigma}{ftu \cdot ctu}$

Shear (ult) $Rs := \frac{FSu \cdot \tau soc}{fsu \cdot ctu}$

Axial (yld) $Ray := \frac{\sigma a \cdot FSy}{fty \cdot cty}$

Bending (yld) $Rby := \frac{FSy \cdot \sigma}{fty \cdot cty}$

Shear(yld) $Rsy := \frac{FSy \cdot \tau soc}{fty \cdot cty}$

Margins of safety

Margin of safety ultimate $MS2u := \frac{1}{\sqrt{(Ra + Rb)^2 + Rs^2}} - 1$ $\min(MS2u) = 3.14$

Margin of safety yield $MS2y := \frac{1}{\sqrt{(Ray + Rby)^2 + Rsy^2}} - 1$ $\min(MS2y) = 3.52$

Reference - Beam and Socket Margin of Safety - Lower Trunnion Bridge Beam Elbow Side - Moment Z

See below for the ultimate minimum margin of safety with element and load case information:

$output1 := augment(ID2, LC2, MS2u)$ $\quad$ $sorted := csort(output1, 3)$

$$\left(sorted^T\right)^{\langle 1 \rangle T} = (1201 \quad 4015 \quad 3.14)$$

Based upon the output of SORT function above, it reads:

Element ID = 1201

Load ID = 4015

MS1u = 3.14

See below for the yield minimum margin of safety with element and load case information:

$output1 := augment(ID2, LC2, MS2y)$ $\quad$ $sorted := csort(output1, 3)$

$$\left(sorted^T\right)^{\langle 1 \rangle T} = (1201 \quad 4015 \quad 3.52)$$

Based upon the output of SORT function above, it reads:

Element ID = 1201

Load ID = 4015

MS1y = 3.52

Beam and Socket Analysis: Lower Vacuum Case Joint Side

The following loop stacks element IDs 1203, 1206, 1209, and 1212 so that the data can be used only on the Vacuum Case side of the beam element. The loop below takes the original data from the "loads" database and pulls out only the data for element IDs 1203, 1206, 1209, and 1212. This includes loads and moments from beam end A and B, although only end A loads and moments are used for the beam and socket analysis.

$\text{rows}(\text{load}) = 2304 \qquad \text{cols}(\text{load}) = 16$

$$\text{lvcside} := \left| \begin{array}{l} k \leftarrow 0 \\ \text{for } i \in 1 .. \text{rows}(\text{load}) \\ \quad \text{if } \text{load}_{i,1} = 1203 \vee \text{load}_{i,1} = 1206 \vee \text{load}_{i,1} = 1209 \vee \text{load}_{i,1} = 1212 \\ \quad\quad \left| \begin{array}{l} k \leftarrow k + 1 \\ \text{newdata}^{\langle k \rangle} \leftarrow \left(\text{load}^T\right)^{\langle i \rangle} \end{array} \right. \\ \text{newdata}^T \end{array} \right.$$

Beam and Socket Analysis: Lower Vacuum Case Joint Side (Moment about Y)

Treating the connection as a Beam in a Socket, as per SMM, Memo 41a

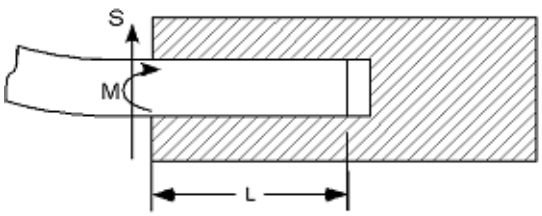

S and M are respectively beam shear in lbf and moment in in-lbf at end of socket. W is unit loading in lbf/in.

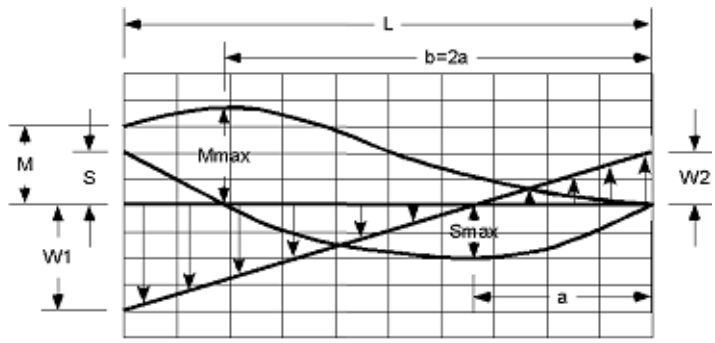

$i := 1 .. \text{rows}(lvcside)$ $\qquad$ $\text{rows}(lvcside) = 768$

$ID3_i := lvcside_{i,1}$ Element ID

$LC3_i := lvcside_{i,2}$ Load case number

$S5a_i := lvcside_{i,5} \cdot lbf$ $\qquad$ $S6a_i := lvcside_{i,6} \cdot lbf$ Picking End A Shear from data

$S_i := \sqrt{(S5a_i)^2 + (S6a_i)^2}$ Combined End A Shear

$P_i := lvcside_{i,7} \cdot lbf$ Picking End A Tension from data $\qquad$ $M_i := lvcside_{i,4} \cdot in \cdot lbf$ Picking Y Moment from data

$L_i := 4.465 \cdot in$ Length of beam inside socket

$$mls_ratio_i := \text{if}\left(S_i = 0, 1000, \frac{M_i}{S_i \cdot L_i}\right) \qquad slm_ratio_i := \text{if}\left(M_i = 0, 1000, S_i \cdot \frac{L_i}{M_i}\right)$$

Calculated values are then:

$$w1_i := \begin{cases} \dfrac{K1_i \cdot M_i}{(L_i)^2} & \text{if } |slm_ratio_i| \le 1 \\ \dfrac{K1_i \cdot S_i}{L_i} & \text{otherwise} \end{cases} \qquad w2_i := \begin{cases} \dfrac{K2_i \cdot M_i}{(L_i)^2} & \text{if } |slm_ratio_i| \le 1 \\ \dfrac{K2_i \cdot S_i}{L_i} & \text{otherwise} \end{cases}$$

$$a_i := Ka_i \cdot L_i$$

Max. shear

$$Smax_i := \begin{cases} \dfrac{(-Ks)_i \cdot M_i}{L_i} & \text{if } |slm_ratio_i| \le 1 \\ -K2_i \cdot S_i & \text{otherwise} \end{cases}$$

Max. Bending moment

$$Mmax_i := \begin{cases} Km_i \cdot M_i & \text{if } |slm_ratio_i| \le 1 \\ Km_i \cdot S_i \cdot L_i & \text{otherwise} \end{cases}$$

Now check:

$$Sc_i := \frac{w1_i - w2_i}{2} \cdot L_i$$

$$Mc_i := \frac{(-w1)_i + 2 \cdot w2_i}{6} \cdot (L_i)^2$$

Percent error:

$$S_percentdiff_i := \frac{S_i - Sc_i}{S_i}$$

$$M_percentdiff_i := \frac{M_i - Mc_i}{M_i}$$

Prepared By	Name	Date		File Name
	Brent Dyer	02/22/06		LTBB-bklg.mcd
Checked By	C. Bala		**Engineering and Science Contract Group** *Structural Analysis Section*	Drawing No. SDG39135735
Title	USS-02 Lower Trunnion Bridge Beam			

To view graph with a specific load case, assign j a value $j := 740$

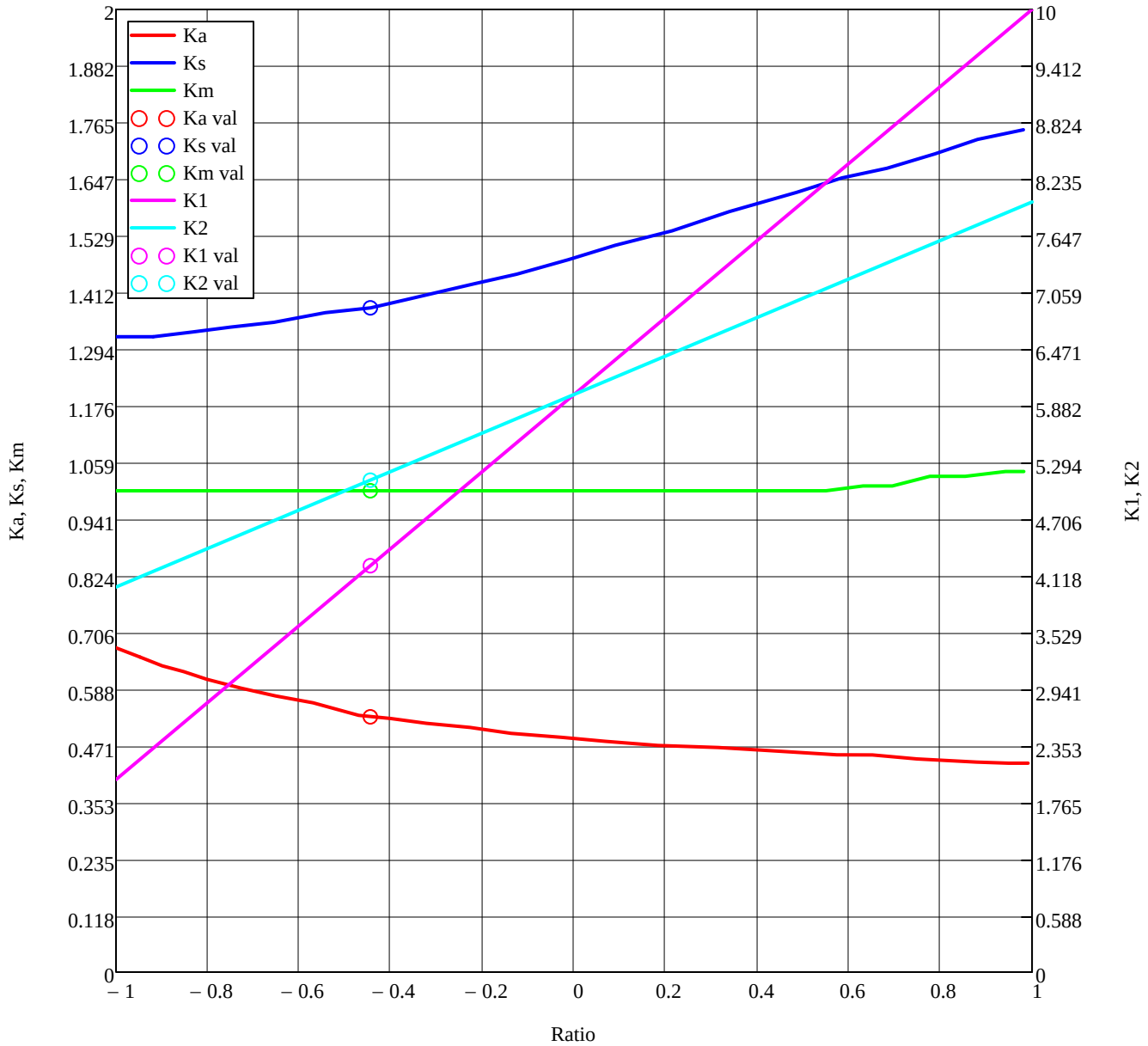

Beam and Socket Coefficients
Note if abs(SL/M) <= 1, Ratio = SL/M, otherwise Ratio = M/SL.

For this specific load case,

$S_j = 3726\,\text{lbf}$

$M_j = -37400\,\text{in}\cdot\text{lbf}$

Max Shear: $Smax_j = 11558\,\text{lbf}$ Shear Check: $Sc_j = 3725.9\,\text{lbf}$

Max moment: $Mmax_j = -37400\,\text{in}\cdot\text{lbf}$ Moment Check: $M_j = -37400\,\text{in}\cdot\text{lbf}$

With percent error $S_percentdiff_j = 0\,\%$

$M_percentdiff_j = 0\,\%$

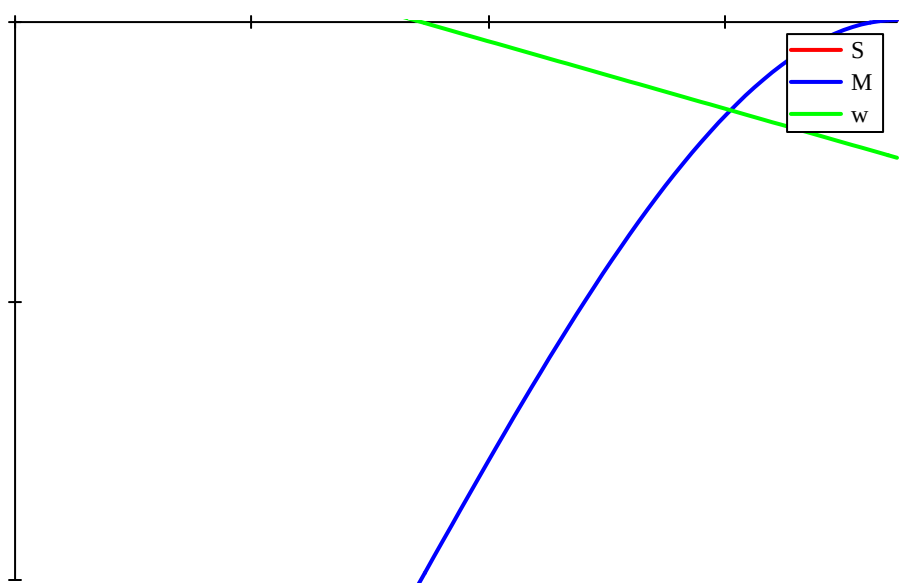

Actual Shear and Moment Distribution Inside Socket

Stresses

Total moment

Bending Tensile stress $\sigma_i := \frac{Mmax_i}{Sy}$ $\max(\sigma) = 6234.4\,psi$

Shear stress $\tau soc_i := \frac{|Smax_i|}{A}$ $\max(\tau soc) = 3211.7\,psi$

Axial tension stress $\sigma a_i := \frac{P_i}{A}$ $\max(\sigma a) = 9771.2\,psi$

Stress Ratios

Axial (ult) $Ra := \frac{\sigma a \cdot FSu}{ftu \cdot ctu}$

Bending (ult) $Rb := \frac{FSu \cdot \sigma}{ftu \cdot ctu}$

Shear (ult) $Rs := \frac{FSu \cdot \tau soc}{fsu \cdot ctu}$

Axial (yld) $Ray := \frac{\sigma a \cdot FSy}{fty \cdot cty}$

Bending (yld) $Rby := \frac{FSy \cdot \sigma}{fty \cdot cty}$

Shear(yld) $Rsy := \frac{FSy \cdot \tau soc}{fty \cdot cty}$

Margins of safety

Margin of safety ultimate $MS3u := \frac{1}{\sqrt{(Ra + Rb)^2 + Rs^2}} - 1$ $\min(MS3u) = 2.15$

Margin of safety yield $MS3y := \frac{1}{\sqrt{(Ray + Rby)^2 + Rsy^2}} - 1$ $\min(MS3y) = 2.64$

Reference - Beam and Socket Margin of Safety - Lower Vacuum Case Joint Side - Moment Y

See below for the ultimate minimum margin of safety with element and load case information:

$output1 := augment(ID3, LC3, MS3u)$ $\quad$ $sorted := csort(output1, 3)$

$$\left(sorted^T\right)^{\langle 1 \rangle T} = (1203 \quad 4031 \quad 2.15)$$

Based upon the output of SORT function above, it reads:

Element ID = 1203

Load ID = 4031

MS1u = 2.15

See below for the yield minimum margin of safety with element and load case information:

$output1 := augment(ID3, LC3, MS3y)$ $\quad$ $sorted := csort(output1, 3)$

$$\left(sorted^T\right)^{\langle 1 \rangle T} = (1203 \quad 4031 \quad 2.64)$$

Based upon the output of SORT function above, it reads:

Element ID = 1203

Load ID = 4031

MS1y = 2.64

Beam and Socket Analysis: Lower Vacuum Case Joint Side (Moment about Z)

Treating the connection as a Beam in a Socket, as per SMM, Memo 41a

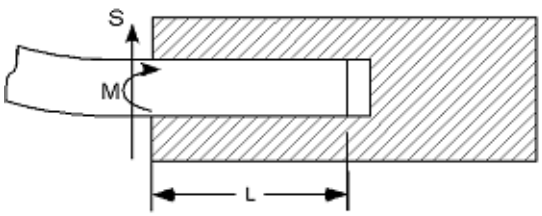

S and M are respectively beam shear in lbf and moment in in-lbf at end of socket. W is unit loading in lbf/in.

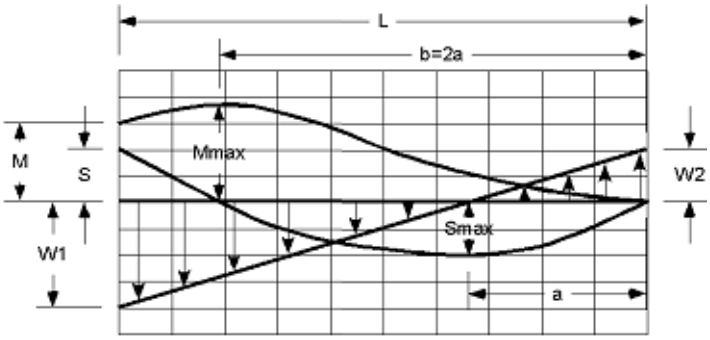

$i := 1 .. \text{rows}(\text{lvcside})$ $\qquad$ $\text{rows}(\text{lvcside}) = 768$

$ID4_i := \text{lvcside}_{i,1}$ Element ID

$LC4_i := \text{lvcside}_{i,2}$ Load case number

$S7a_i := \text{lvcside}_{i,5} \cdot \text{lbf}$ $\qquad$ $S8a_i := \text{lvcside}_{i,6} \cdot \text{lbf}$ Picking End A Shear from data

$S_i := \sqrt{(S7a_i)^2 + (S8a_i)^2}$ Combined End A Shear

$P_i := \text{lvcside}_{i,7} \cdot \text{lbf}$ Picking End A Tension from data $\qquad$ $M_i := \text{lvcside}_{i,3} \cdot \text{in} \cdot \text{lbf}$ Picking Z Moment from data

$L_i := 4.465 \cdot \text{in}$ Length of beam inside socket

$$\text{mls_ratio}_i := \text{if}\left(S_i = 0, 1000, \frac{M_i}{S_i \cdot L_i}\right) \qquad \text{slm_ratio}_i := \text{if}\left(M_i = 0, 1000, S_i \cdot \frac{L_i}{M_i}\right)$$

Calculated values are then:

$$w1_i := \begin{cases} \dfrac{K1_i \cdot M_i}{(L_i)^2} & \text{if } |slm_ratio_i| \le 1 \\ \dfrac{K1_i \cdot S_i}{L_i} & \text{otherwise} \end{cases} \qquad w2_i := \begin{cases} \dfrac{K2_i \cdot M_i}{(L_i)^2} & \text{if } |slm_ratio_i| \le 1 \\ \dfrac{K2_i \cdot S_i}{L_i} & \text{otherwise} \end{cases}$$

$$a_i := Ka_i \cdot L_i$$

Max. shear

$$Smax_i := \begin{cases} \dfrac{(-Ks)_i \cdot M_i}{L_i} & \text{if } |slm_ratio_i| \le 1 \\ -K2_i \cdot S_i & \text{otherwise} \end{cases}$$

Max. Bending moment

$$Mmax_i := \begin{cases} Km_i \cdot M_i & \text{if } |slm_ratio_i| \le 1 \\ Km_i \cdot S_i \cdot L_i & \text{otherwise} \end{cases}$$

Now check:

$$Sc_i := \frac{w1_i - w2_i}{2} \cdot L_i$$

$$Mc_i := \frac{(-w1)_i + 2 \cdot w2_i}{6} \cdot (L_i)^2$$

Percent error:

$$S_percentdiff_i := \frac{S_i - Sc_i}{S_i}$$

$$M_percentdiff_i := \frac{M_i - Mc_i}{M_i}$$

Prepared By	Name Brent Dyer	Date 02/22/06	Engineering and Science Contract Group *Structural Analysis Section*	File Name LTBB-bklg.mcd
Checked By	C. Bala			Drawing No. SDG39135735
Title	USS-02 Lower Trunnion Bridge Beam			

To view graph with a specific load case, assign j a value $j := 633$

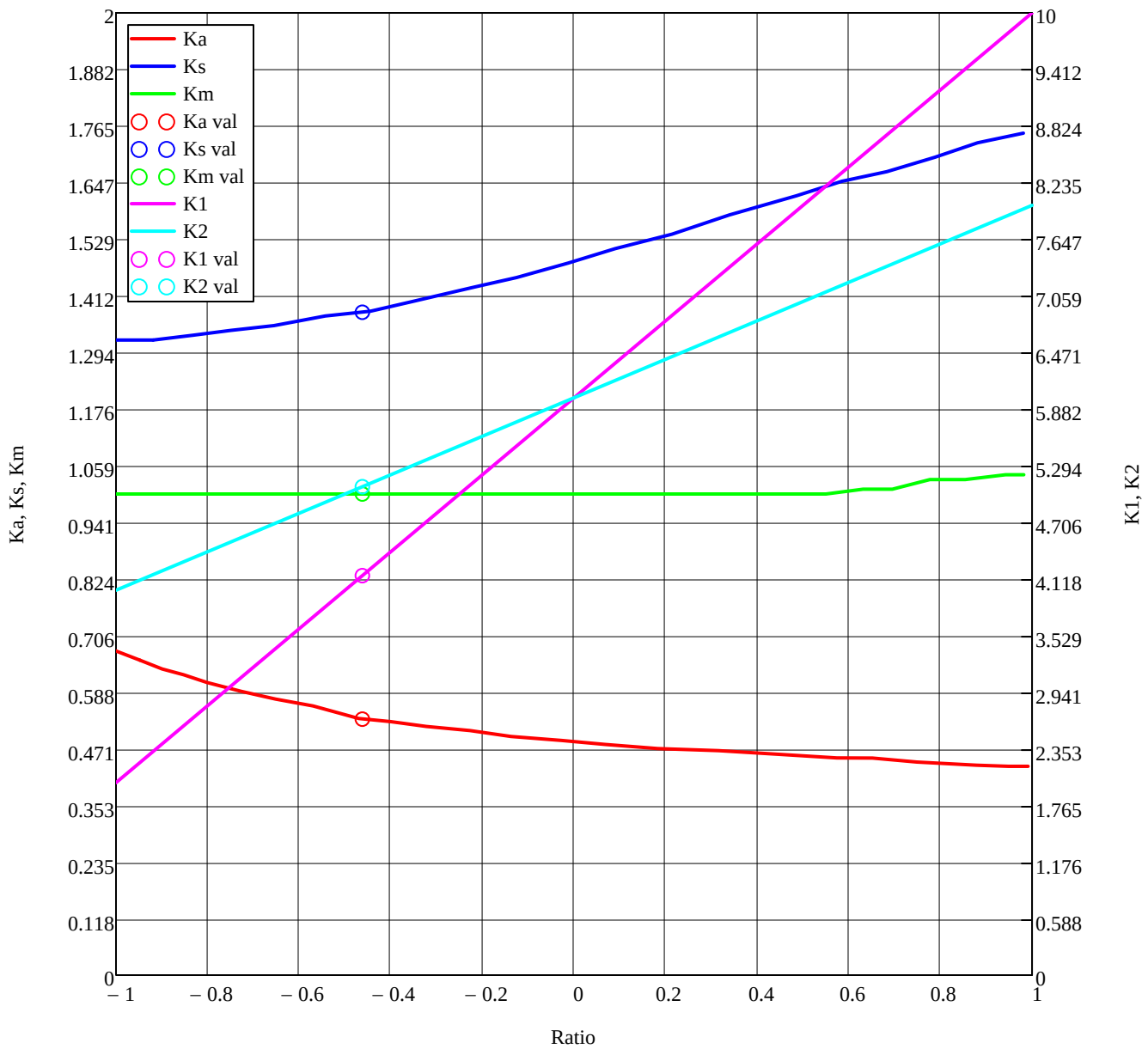

Beam and Socket Coefficients
Note if abs(SL/M) <= 1, Ratio = SL/M, otherwise Ratio = M/SL.

For this specific load case,

$S_j = 4161\,\text{lbf}$

$M_j = -40202\,\text{in}\cdot\text{lbf}$

Max Shear: $Smax_j = 12404\,\text{lbf}$ Shear Check: $Sc_j = 4161.4\,\text{lbf}$

Max moment: $Mmax_j = -40202\,\text{in}\cdot\text{lbf}$ Moment Check: $M_j = -40202\,\text{in}\cdot\text{lbf}$

With percent error $S_percentdiff_j = 0\,\%$

$M_percentdiff_j = -0\,\%$

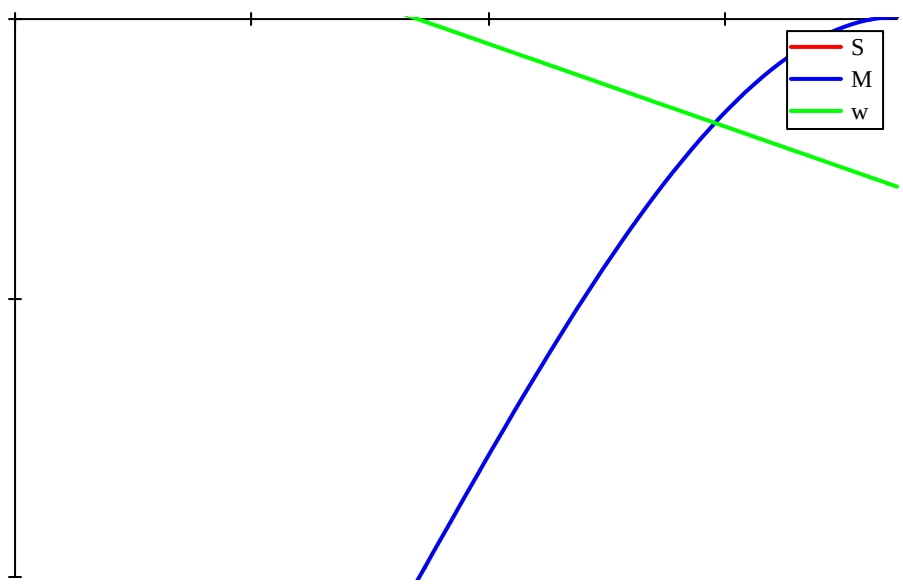

Actual Shear and Moment Distribution Inside Socket

Stresses

Total moment

Bending Tensile stress $\sigma_i := \frac{Mmax_i}{Sz}$ $\max(\sigma) = 5394.4\,psi$

Shear stress $\tau soc_i := \frac{|Smax_i|}{A}$ $\max(\tau soc) = 2959.8\,psi$

Axial tension stress $\sigma a_i := \frac{P_i}{A}$ $\max(\sigma a) = 9771.2\,psi$

Stress Ratios

Axial (ult) $Ra := \frac{\sigma a \cdot FSu}{ftu \cdot ctu}$

Bending (ult) $Rb := \frac{FSu \cdot \sigma}{ftu \cdot ctu}$

Shear (ult) $Rs := \frac{FSu \cdot \tau soc}{fsu \cdot ctu}$

Axial (yld) $Ray := \frac{\sigma a \cdot FSy}{fty \cdot cty}$

Bending (yld) $Rby := \frac{FSy \cdot \sigma}{fty \cdot cty}$

Shear(yld) $Rsy := \frac{FSy \cdot \tau soc}{fty \cdot cty}$

Margins of safety

Margin of safety ultimate $MS4u := \frac{1}{\sqrt{(Ra + Rb)^2 + Rs^2}} - 1$ $\min(MS4u) = 2.13$

Margin of safety yield $MS4y := \frac{1}{\sqrt{(Ray + Rby)^2 + Rsy^2}} - 1$ $\min(MS4y) = 2.55$

Reference - Beam and Socket Margin of Safety - Lower Vacuum Case Joint Side - Moment Z

See below for the ultimate minimum margin of safety with element and load case information:

$output1 := augment(ID4, LC4, MS4u)$ $\quad$ $sorted := csort(output1, 3)$

$$\left(sorted^T\right)^{\langle 1 \rangle T} = (1212 \quad 4057 \quad 2.13)$$

Based upon the output of SORT function above, it reads:

Element ID = 1212

Load ID = 4057

MS1u = 2.13

See below for the yield minimum margin of safety with element and load case information:

$output1 := augment(ID4, LC4, MS4y)$ $\quad$ $sorted := csort(output1, 3)$

$$\left(sorted^T\right)^{\langle 1 \rangle T} = (1212 \quad 4057 \quad 2.55)$$

Based upon the output of SORT function above, it reads:

Element ID = 1212

Load ID = 4057

MS1y = 2.55

Summary of Minimum Margin of Safety:

The ultimate minimum margin of safety is 1.42 and occurs in the buckling analysis. See page 2.1.8 - 9.

The yield minimum margin of safety is 2.22 and occurs in the beam and socket analysis for the lower trunnion bridge beam elbow side (Moment about Y). See page 2.1.8 - 15.

2.1.9 Lower Vacuum Case Interface Joint

Margins of Safety

Table 2.1.9-1: Minimum Margin of Safety Summary

Part / Dwg Number	Part Name / Description	Material & Heat Treatment	Critical Load Condition	Failure Mode	Margin of Safety	Reference Page
SDG39135737	Interface Joint Assembly, Lower VC, Lower USS-02 Assembly	AL ALY 7050-T7451	Landing	Max Prin. Stress	0.06 (u)	2.1.9-13

Notes:

1. Factors of Safety are 1.4 for Ultimate and 1.1 for Yield.
2. Boundary condition is at five Trunnion locations.
3. All 192 load cases of Launch and Landing are applied.
4. u = ultimate, y = yield

Factors of Safety

The hardware is designed with a yield factor of 1.1 and an ultimate factor of 1.4 against limit loads for Launch and Landing.

Description of Structure

Figure 2.1.9-2 below shows the locations of four Lower VC Joints in AMS-02. The Joints were machined out of 7050-T7451 Aluminum Alloy plate. One part of a Joint was riveted to Lower Trunnion Bridge. One was bolted to Lower Angle Tube. One was bolted to Lower TOF Strut. And one was bolted to Interface Plate in Vacuum Case.

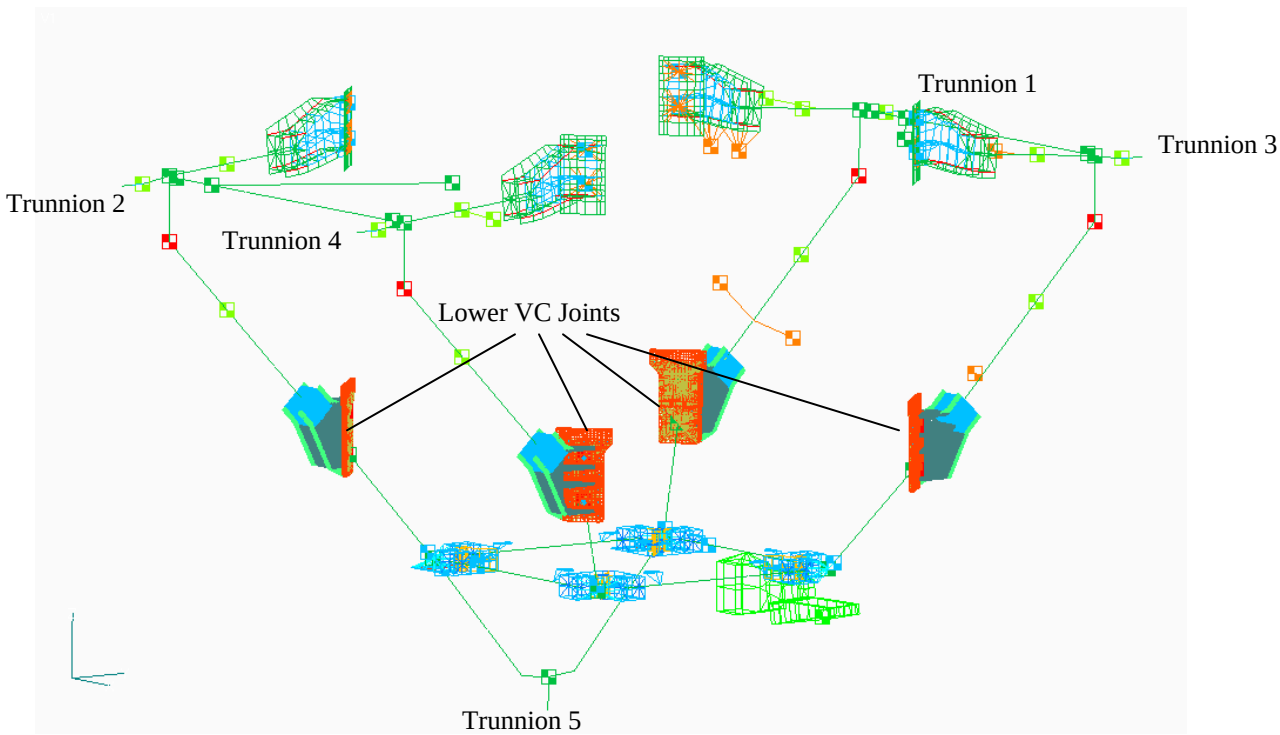

Figure 2.1.9-2 : Location of Lower VC Joints in AMS-02

* Note that the above figure does not show Vacuum Case for clarity.

Description of Model

A FEM model was built of the Lower VC Joint hardware using FEMAP.

1. Parts were mainly modeled as CHEXA and CPENTA solid elements.
2. At the bolt holes, RBE2 rigid elements with DOF's 1, 2 & 3 are represented.
3. The interface between Lower Trunnion Bridge and the Tube Section are represented by RBE2 rigid elements with DOF's 1, 2 & 3.
4. The interfaces of Vacuum Case, Lower Angle Beam, and Lower TOF to the Lower VC Joints are represented by RBE2 rigid elements with DOF's 1.

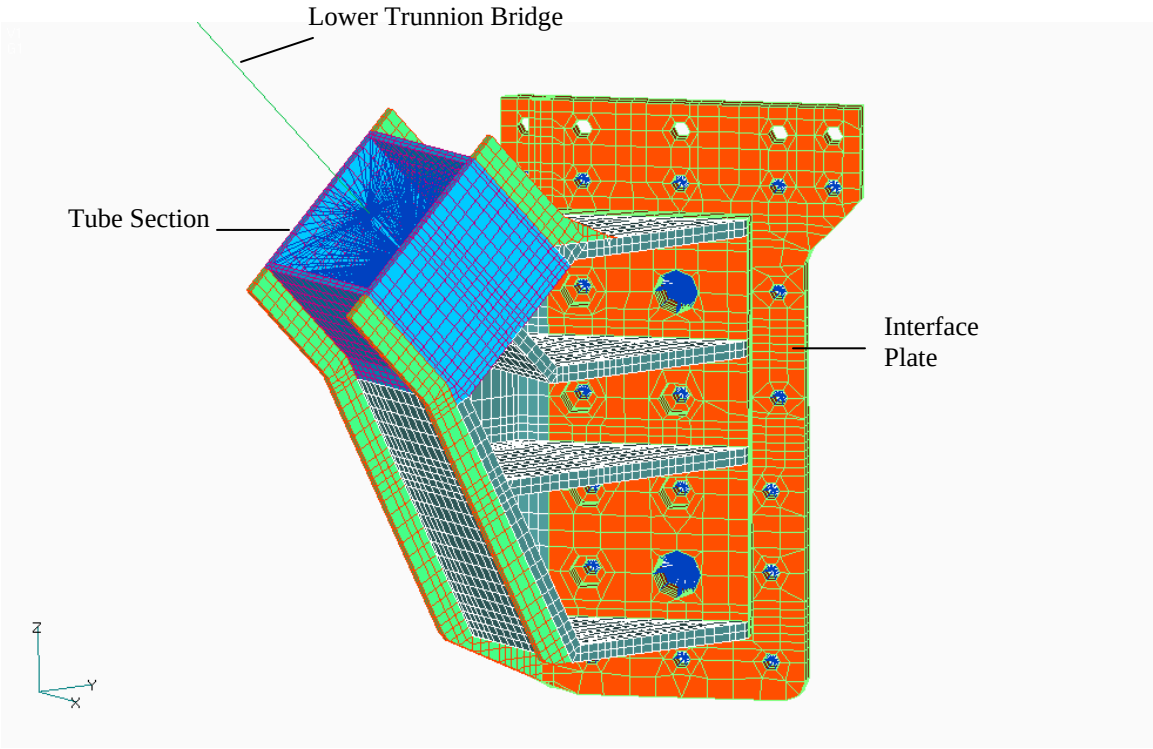

Figure 2.1.9-3 : View 1 - FEMAP Model of Lower VC Joint

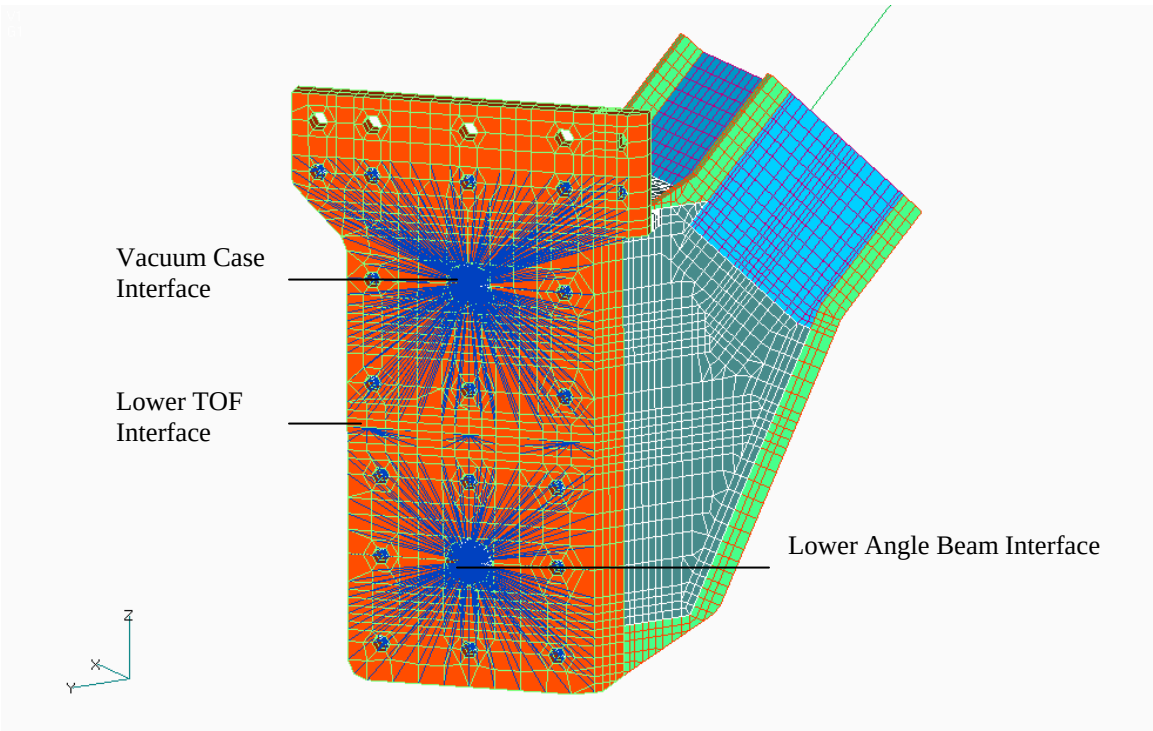

Figure 2.1.9-4 : View 2- FEMAP Model of Lower VC Joint

The model was then constrained with DOF's 1&3 at Trunnion 1&2 (see Figure 2.1.9-2), with DOF's 3 at Trunnion 3&4, and with DOF's 2 at Trunnion 5.

All 192 load cases for Launch and Landing were applied.
MSC/NASTRAN v.2005 was used as a solver for analyzing the complete math model of AMS-02 version 2-04.

Solid stresses were recovered and sorted to find the maximum of Principal, Von-Mises, and Shear in all four Lower VC Joints.

Table below shows detail of model inputs.

Table 2.1.9-2 – Inputs of Finite Element Model of Lower VC Joints

DESCRIPTION	NODE #	ELEM #	PROP	MAT'L
Joint 1	500,001 - 515,504	500,001 - 511,332	200001 - solid	200001 - 7050-T7451
Joint 2	200,001 - 215,504	200,001 - 211,332		
Joint 3	300,001 - 315,504	300,001 - 311,332		
Joint 4	600,001 - 615,504	600,001 - 611,332		

Model Checks

Rigid body checks were performed using MSC/NASTRAN. Results are shown below. The KGG, KNN and KFF matrices all pass with low strain energies.

```
*** USER INFORMATION MESSAGE 7570 (GPWG1D)
    RESULTS OF RIGID BODY CHECKS OF MATRIX KGG      (G-SET)  FOLLOW:
    PRINT RESULTS IN ALL SIX DIRECTIONS AGAINST THE LIMIT OF   1.000000E-02
        DIRECTION       STRAIN ENERGY       PASS/FAIL
        ---------       -------------       ---------
          1             1.103060E-08        PASS
          2             2.298996E-08        PASS
          3             4.454561E-07        PASS
          4             4.764726E-06        PASS
          5             3.137545E-08        PASS
          6             2.111139E-06        PASS
```

```
*** USER INFORMATION MESSAGE 7570 (GPWG1D)
    RESULTS OF RIGID BODY CHECKS OF MATRIX KNN      (N-SET)  FOLLOW:
    PRINT RESULTS IN ALL SIX DIRECTIONS AGAINST THE LIMIT OF   1.000000E-02
        DIRECTION       STRAIN ENERGY       PASS/FAIL
        ---------       -------------       ---------
          1             1.103060E-08        PASS
          2             2.298996E-08        PASS
          3             4.454561E-07        PASS
          4             4.764726E-06        PASS
          5             3.137545E-08        PASS
          6             2.111139E-06        PASS
```

```
*** USER INFORMATION MESSAGE 7570 (GPWG1D)
    RESULTS OF RIGID BODY CHECKS OF MATRIX KNN+AUTO (N+AUTOSPC-SET)  FOLLOW:
    PRINT RESULTS IN ALL SIX DIRECTIONS AGAINST THE LIMIT OF   1.000000E-02
        DIRECTION       STRAIN ENERGY       PASS/FAIL
        ---------       -------------       ---------
          1             1.103060E-08        PASS
          2             2.298996E-08        PASS
          3             4.454561E-07        PASS
          4             4.764726E-06        PASS
          5             3.137545E-08        PASS
          6             2.111139E-06        PASS
```

*** USER INFORMATION MESSAGE 7570 (GPWG1D)
RESULTS OF RIGID BODY CHECKS OF MATRIX KFF (F-SET) FOLLOW:
PRINT RESULTS IN ALL SIX DIRECTIONS AGAINST THE LIMIT OF 1.000000E-02

DIRECTION	STRAIN ENERGY	PASS/FAIL
1	1.103060E-08	PASS
2	2.298996E-08	PASS
3	4.454561E-07	PASS
4	4.764726E-06	PASS
5	3.137545E-08	PASS
6	2.111139E-06	PASS

A further check is that of rigid body modes. The first 10 unconstrained modes are shown below. There are six rigid body modes (~ 0.0), and then good separation with the first non-rigid body mode.

Table 2.1.9-3 : Eigenvalue Summary of Lower VC Joint Model

REAL EIGENVALUES						
MODE NO.	EXTRACTION ORDER	EIGENVALUE	RADIANS	CYCLES	GENERALIZED MASS	GENERALIZED STIFFNESS
1	1	-1.08E-05	3.29E-03	5.23E-04	1.00E+00	-1.08E-05
2	2	-5.16E-06	2.27E-03	3.62E-04	1.00E+00	-5.16E-06
3	3	4.63E-07	6.80E-04	1.08E-04	1.00E+00	4.63E-07
4	4	2.99E-06	1.73E-03	2.75E-04	1.00E+00	2.99E-06
5	5	5.30E-06	2.30E-03	3.67E-04	1.00E+00	5.30E-06
6	6	7.86E-06	2.80E-03	4.46E-04	1.00E+00	7.86E-06
7	7	1.84E+07	4.29E+03	6.83E+02	1.00E+00	1.84E+07
8	8	4.61E+07	6.79E+03	1.08E+03	1.00E+00	4.61E+07
9	9	6.05E+07	7.78E+03	1.24E+03	1.00E+00	6.05E+07
10	10	6.21E+07	7.88E+03	1.25E+03	1.00E+00	6.21E+07

Additional check is comparision of the strap loads between the load model and the detail model. The loads are picked randomly. Loads in both models are closely matched.

Table 2.1.9-4 : Strap Loads (lbf) in Load Model 2-04

Load	LOAD MODEL 2-04 : STRAP LOADS (LBF)															
Case	***90001***	***90002***	***90003***	***90004***	***90005***	***90006***	***90007***	***90008***	***90009***	***90010***	***90011***	***90012***	***90013***	***90014***	***90015***	***90016***
1001	1186.6	1615.3	1495.4	2128.4	1241.3	3808.0	1382.5	5331.2	5259.6	1683.6	10097.9	2054.3	7952.9	3314.8	9044.1	3929.6
1023	1171.3	2245.6	1605.7	6899.0	1013.3	1511.8	1670.6	3157.0	7264.3	4582.4	6207.3	3965.4	6681.8	1678.2	10078.1	1914.3
2031	3923.0	6907.2	1444.7	1555.9	2975.5	6887.1	1389.8	1621.2	6181.0	8787.8	1481.6	1652.1	7512.9	5265.2	1564.0	1500.3
2040	2119.5	1696.3	5485.8	2655.9	2756.3	2103.0	7067.2	3734.3	1495.0	1586.5	1980.6	2141.0	1433.5	2698.7	1621.3	4952.3
4050	1896.4	2100.0	3024.5	3905.9	5116.4	1178.1	6429.4	1281.8	882.7	1133.1	2774.4	6618.2	682.0	1087.4	1612.9	2519.9
4064	7657.7	3755.7	1663.0	1556.5	10633.2	1494.6	2604.4	1236.1	5487.6	10488.8	593.2	852.8	2100.1	7849.4	479.6	947.1

Table 2.1.9-5 : Strap Loads (lbf) in Lower VC Joint

Load	LOWER-VC-JOINT MODEL : STRAP LOADS (LBF)															
Case	***90001***	***90002***	***90003***	***90004***	***90005***	***90006***	***90007***	***90008***	***90009***	***90010***	***90011***	***90012***	***90013***	***90014***	***90015***	***90016***
1001	1186.8	1614.0	1494.6	2124.1	1242.4	3847.7	1383.3	5346.9	5280.4	1678.5	10092.2	2047.7	7932.8	3377.9	9034.2	4009.2
1023	1170.9	2244.8	1608.2	6889.6	1013.6	1512.3	1670.0	3156.0	7264.6	4579.2	6204.2	3981.2	6685.4	1679.0	10069.0	1914.1
2031	3944.5	6884.6	1446.6	1555.2	2985.5	6884.2	1392.3	1625.0	6151.3	8787.0	1478.3	1649.2	7426.8	5286.4	1561.8	1501.6
2040	2119.1	1696.1	5491.1	2655.3	2747.6	2102.4	7068.5	3751.2	1495.2	1587.2	1980.3	2140.9	1433.7	2695.0	1624.3	4964.2
4050	1897.2	2099.3	3023.8	3885.4	5119.4	1179.4	6364.9	1281.8	884.6	1135.1	2762.0	6587.1	684.9	1089.0	1611.3	2492.2
4064	7654.6	3757.0	1663.2	1556.4	10633.6	1494.4	2604.7	1237.0	5486.9	10491.6	592.2	852.9	2097.6	7851.6	479.1	947.4

Table 2.1.9-6 : Load Differences (lbf) between Two Models

Load	LOAD DIFFERENCES BETWEEN TWO MODELS															
Case	***90001***	***90002***	***90003***	***90004***	***90005***	***90006***	***90007***	***90008***	***90009***	***90010***	***90011***	***90012***	***90013***	***90014***	***90015***	***90016***
1001	-0.2	1.3	0.8	4.4	-1.1	-39.6	-0.7	-15.7	-20.8	5.2	5.7	6.5	20.1	-63.1	10.0	-79.6
1023	0.4	0.8	-2.5	9.4	-0.3	-0.5	0.6	1.0	-0.2	3.2	3.1	-15.8	-3.6	-0.8	9.0	0.2
2031	-21.4	22.5	-1.9	0.7	-10.0	2.9	-2.5	-3.8	29.7	0.9	3.3	2.9	86.1	-21.2	2.3	-1.4
2040	0.4	0.2	-5.3	0.6	8.7	0.6	-1.3	-17.0	-0.3	-0.8	0.2	0.2	-0.2	3.7	-3.0	-11.9
4050	-0.7	0.7	0.7	20.5	-3.0	-1.3	64.4	0.0	-1.9	-2.0	12.4	31.1	-2.9	-1.6	1.7	27.6
4064	3.1	-1.3	-0.2	0.1	-0.4	0.2	-0.3	-0.9	0.7	-2.8	0.9	0.0	2.6	-2.3	0.5	-0.3

Note: 1. Negative sign in Table 2.1.9-6 means load in Detail model greater than in Load model.

Material and Temperature

The Lower VC Joints are 7050-T7451 Aluminum Alloy. Material properties of 7050-T7451 are taken from Boeing Material Specification of BMS 7-323C, and MIL-HDBK-5H. Temperature limits at the interface of Lower USS to Upper USS are provided by the Thermal Analysis Group . For Launch condition, the temperature of 120°F is applied. For Landing condition, the temperature of 161°F is applied.

Analysis

The critical stresses for Lower VC Joints are compared to the ultimate and yield strength of 7050-T7451 Aluminum Alloy. All margins of safety are positive.

CHECK OF LOWER VACUUM CASE JOINTS

Material Properties : 7050-T7451 AL ALY, BMS 7-323C or AMS 4050 *(Boeing Material Specification, BMS 7-323C, Table 1 & MIL-HDBK-5H, Table 3.7.3.0(b_1) for thickness of 5.001"-6.000")*

$F_{tu} := 67000\,psi$

$F_{ty} := 57000\,psi$

$F_{su} := 43000\,psi$

Factors of Safety, $FS_u := 1.4$ $FS_y := 1.1$

Temperature reduction factors, *(Ref. MIL-HDBK-5H, Figure 3.7.3.2.1)*

+ At 120°F for Launch condition:

- Ultimate: $\gamma_{u1} := 0.95$
- Yield: $\gamma_{y1} := 0.99$

+ At 161°F for Landing condition:

$\gamma_{u2} := 0.90$

$\gamma_{y2} := 0.96$

Allowable stresses:

+ For Launch condition:

$F_{tu1.a} := \gamma_{u1} \cdot F_{tu}$

$F_{tu1.a} = 63650\,psi$

$F_{ty1.a} := \gamma_{y1} \cdot F_{ty}$

$F_{ty1.a} = 56430\,psi$

$F_{su1.a} := \gamma_{u1} \cdot F_{su}$

$F_{su1.a} = 40850\,psi$

+ For Landing condition:

$F_{tu2.a} := \gamma_{u2} \cdot F_{tu}$

$F_{tu2.a} = 60300\,psi$

$F_{ty2.a} := \gamma_{y2} \cdot F_{ty}$

$F_{ty2.a} = 54720\,psi$

$F_{su2.a} := \gamma_{u2} \cdot F_{su}$

$F_{su2.a} = 38700\,psi$

Maximum Von-Mises, principal, and shear stresses of solid elements are selected from 192 load cases for Launch and Landing. NASPOST V.2.1 is used to sort out the maximum stresses within the load cases.

+ For Launch condition: *(Stress contour plot shown in Figure 2.1.9-5)*

$\sigma_{uu1.max} := 27441 \cdot psi$ *LC# 1016, ELEM# 506475* *(see p.A6-3)*

$\sigma_{uy1.max} := 27865 \cdot psi$ *LC# 1016, ELEM# 506474* *(see p.A6-3)*

$\sigma_{us1.max} := 15199 \cdot psi$ *(LC# 1016; ELEM# 505774)* *(see p.A6-4)*

+ For Landing condition: *(Stress contour plot shown in Figure 2.1.9-6)*

$\sigma_{uu2.max} := 40690 \cdot psi$ *LC# 4016; ELEM# 506475* *(see p.A6-8)*

$\sigma_{uy2.max} := 42302 \cdot psi$ *LC# 4016; ELEM# 505774* *(see p.A6-8)*

$\sigma_{us2.max} := 24295 \cdot psi$ *LC# 4016; ELEM# 505774* *(see p.A6-9)*

Margins of Safety,

+ For Launch condition:

$$MS_{u1} := \frac{F_{tu1.a}}{FS_u \cdot \sigma_{uu1.max}} - 1 \qquad MS_{u1} = 0.66$$

$$MS_{y1} := \frac{F_{ty1.a}}{FS_y \cdot \sigma_{uy1.max}} - 1 \qquad MS_{y1} = 0.84$$

$$MS_{s1} := \frac{F_{su1.a}}{FS_u \cdot \sigma_{us1.max}} - 1 \qquad MS_{s1} = 0.92$$

+ For Landing condition:

$$MS_{u2} := \frac{F_{tu2.a}}{FS_u \cdot \sigma_{uu2.max}} - 1 \qquad MS_{u2} = 0.06$$

$$MS_{y2} := \frac{F_{ty2.a}}{FS_y \cdot \sigma_{uy2.max}} - 1 \qquad MS_{y2} = 0.18$$

$$MS_{s2} := \frac{F_{su2.a}}{FS_u \cdot \sigma_{us2.max}} - 1 \qquad MS_{s2} = 0.14$$

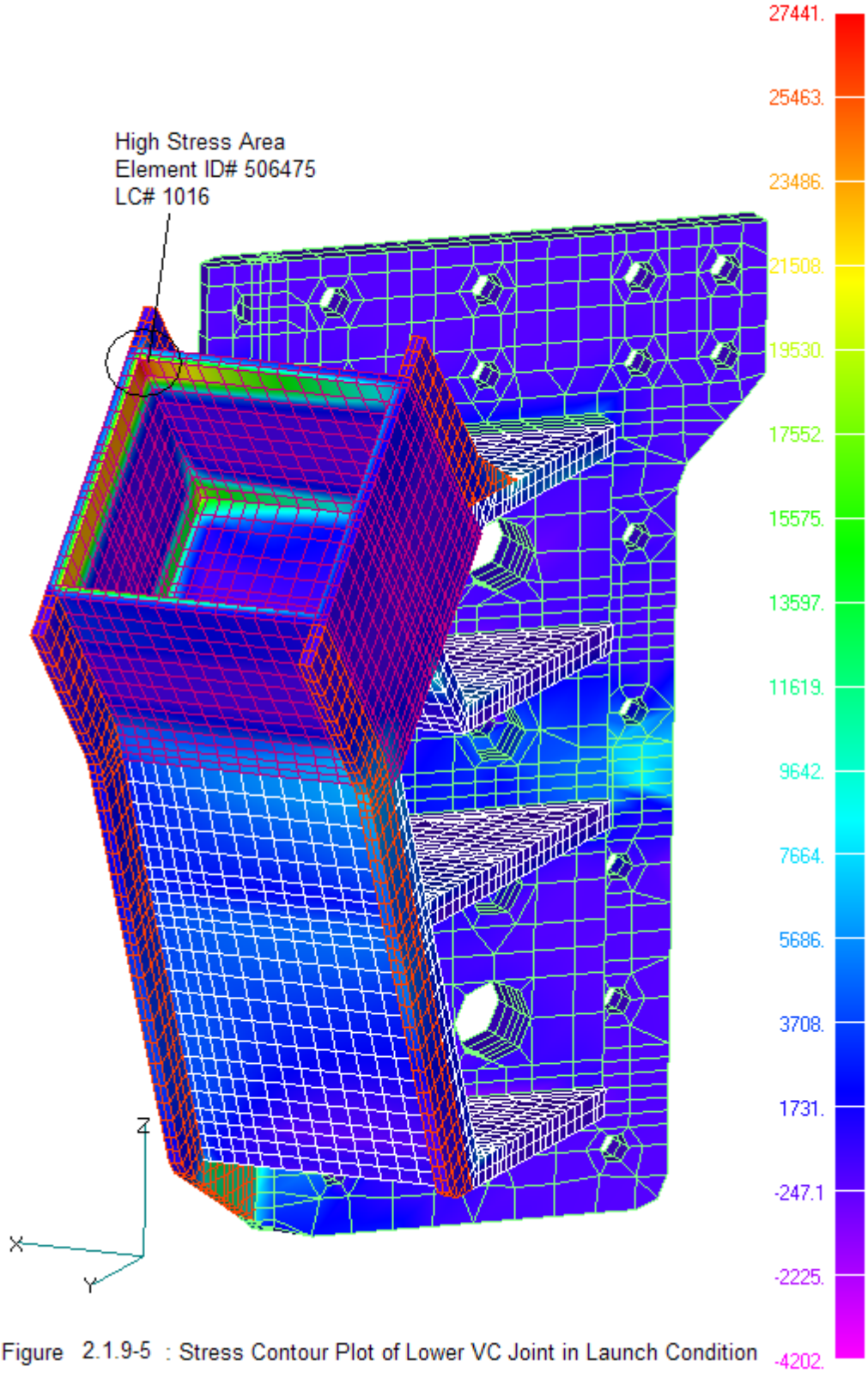

Figure 2.1.9-5 : Stress Contour Plot of Lower VC Joint in Launch Condition

Prepared By	Name	Date		File Name
	Peter Hoang	06/06/05		lvcj.mcd
Checked By	John Krejci	06/21/05	**Engineering and Science Contract Group** *Structural Analysis Section*	Drawing No. SDG39135737
Title	**AMS-02 LOWER VACUUM CASE INTERFACE JOINT**			

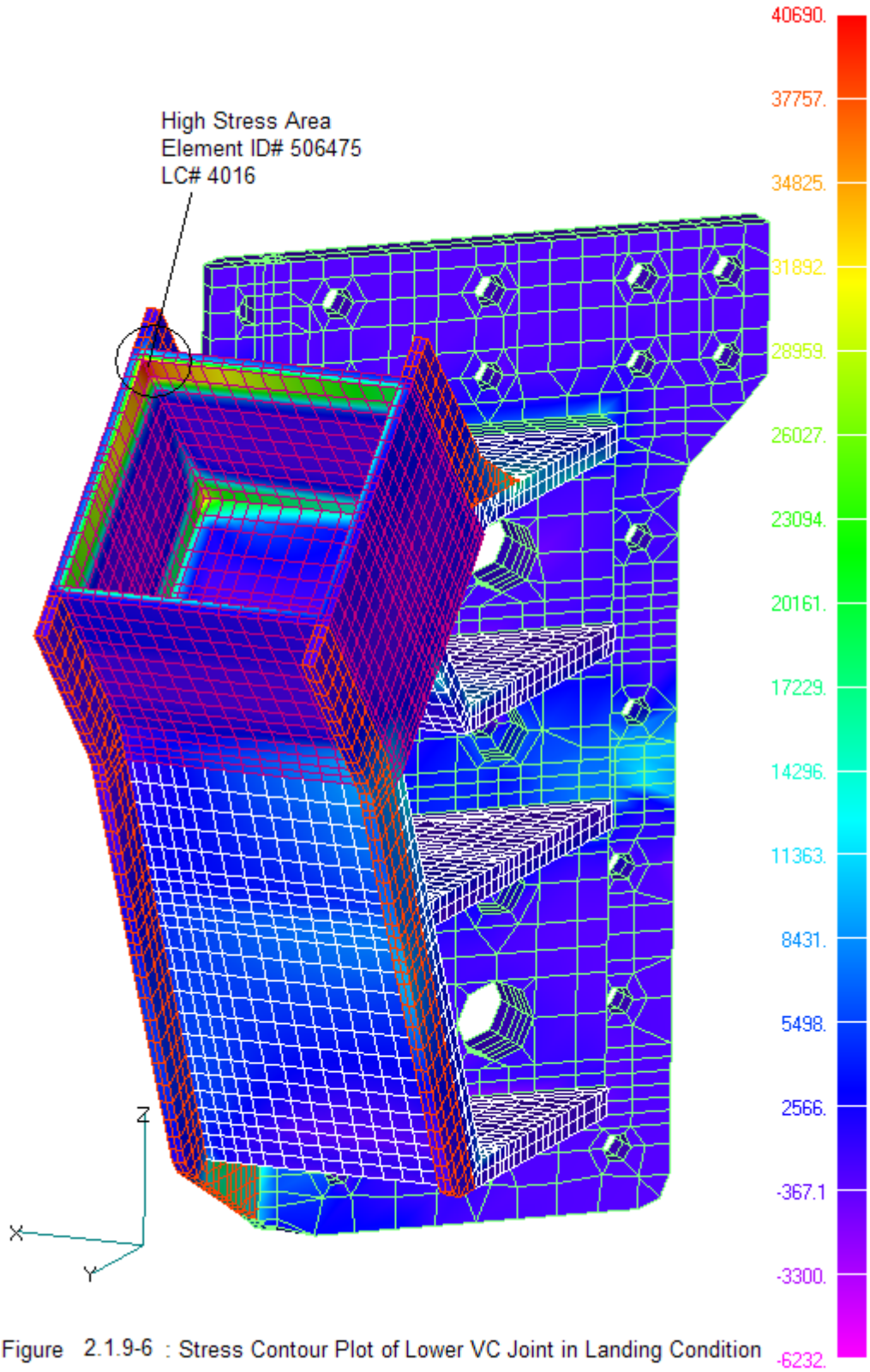

Figure 2.1.9-6 : Stress Contour Plot of Lower VC Joint in Landing Condition

2.1.10 Sill Bracket

2.1.11 Sill Tube

Prepared By	Name	Date		File Name
	J.Edgecombe	01/25/06		Sill Tube.xmcd
Checked By	C. Bala		**Engineering and Science Contract Group** *Structural Analysis Section*	Drawing No. SDG39135739
Title	Stress Analysis for Sill Tube			

COMPONENT: USS-02 Sill Tube, SDG39135739

MARGIN OF SAFETY SUMMARY:

Part	Part Number	Material	Element ID	Subcase	MS	Failure Mode	Page #
Sill Tube	SDG39135739-301	7075-T73511	1703	1032	4.267	Combined	2.1.11-7

INTRODUCTION:

The Sill Tube is fabricated from 4" x 4" x 0.25" thick 7075-T73511 aluminum square tubing. Two Sill Tubes are located on the USS-02 assembly, one on the port side, and one on the starboard side. The tubes are riveted to the Sill Bracket on the forward end, and to the Diagonal Sill Bracket on the aft end as shown in Figure 1.

LOADS:

Applied loads to the Sill Tube have been calculated using the 2-04 loads model. The Sill Tube is represented by four CBEAM elements in the loads model: elements 1701 and 1702 on the -y side of the assembly and elements 1703 and 1704 on the +y side. Using NASPOST, three forces and three moments were calculated at each end of the beam elements and output to the file "silltube.lis". For analysis, the NASGRO output file was stripped of all headers and the reformatted file "SillTube.txt" is imported into MathCAD for analysis.

FACTORS OF SAFETY

A factor of safety of 1.4 is used on ultimate and 1.1 on yield.

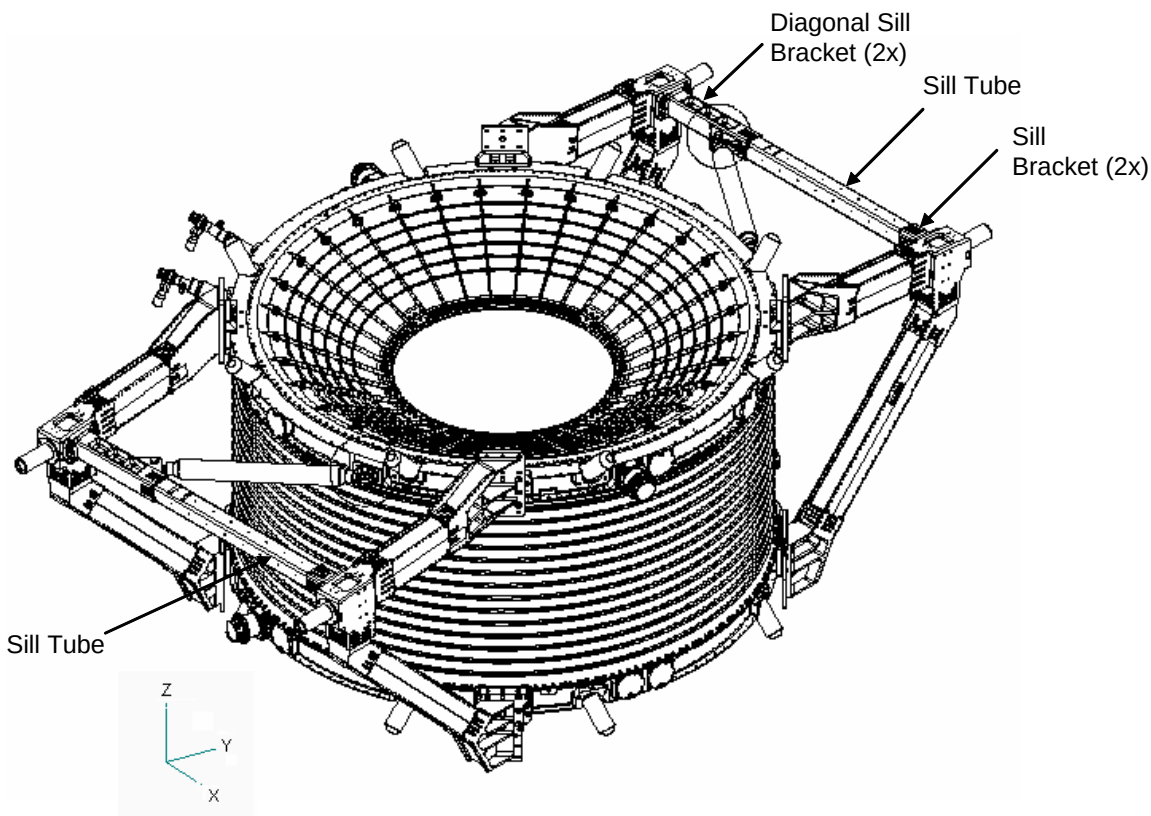

Figure 2.1.11-1: Upper USS-02 Assembly

Prepared By	Name	Date	Engineering and Science Contract Group	File Name
	J.Edgecombe	01/25/06		Sill Tube.xmcd
Checked By	C. Bala		*Structural Analysis Section*	Drawing No. SDG39135739
Title	Stress Analysis for Sill Tube			

PART: Sill Tube, SDG39135739-301

ANALYSIS: Combined Tension/Compression, Bending and Shear Analysis (Includes Buckling)

FACTORS OF SAFETY:

$SF_u := 1.4$ $\quad SF_y := 1.1$ *(Ultimate and Yield Factors of Safety)*

MATERIAL PROPERTIES: 7075-T73511 Aluminum, 0.250"-0.499 Thick Extrusion @150F per MMPDS-01

Thermal properties have been derated relative to the maximum temperature of 150F taken from Appendix C2

$E_c := 0.98 \cdot 10700 \cdot ksi$ $\quad E_c = 10486\,ksi$ *(Compressive Modulus of Elasticity)*

$F_{tu} := 0.93 \cdot 68 \cdot ksi$ $\quad F_{tu} = 63.24\,ksi$ *(Ultimate Tensile Strength)*

$F_{ty} := 0.95 \cdot 57 \cdot ksi$ $\quad F_{ty} = 54.15\,ksi$ *(Tensile Yield Strength)*

$F_{cy} := 0.96 \cdot 60 \cdot ksi$ $\quad F_{cy} = 57.6\,ksi$ *(Compressive Yield Strength)*

$F_{su} := 0.99 \cdot 38 \cdot ksi$ $\quad F_{su} = 37.62\,ksi$ *(Ultimate Shear Strength)*

PART GEOMETRY:

$L := 52.3 \cdot in$ *(Tube Length)*

$D_y := 4 \cdot in$ *(Tube Height)*

$D_z := 4 \cdot in$ *(Tube Width)*

$t := 0.25 \cdot in$ *(Wall Thickness)*

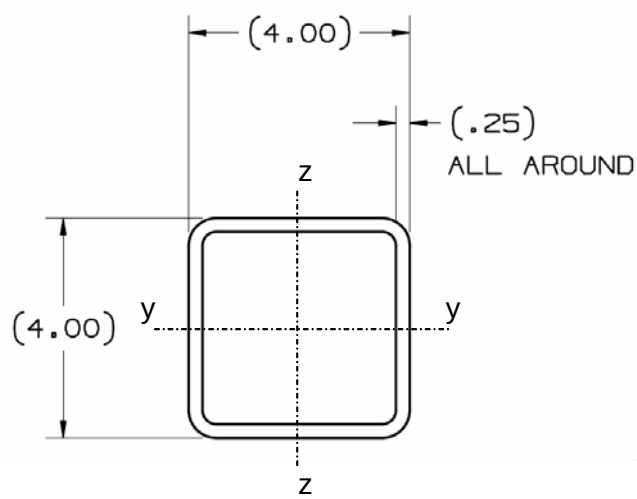

$$A := (D_y \cdot D_z) - [(D_y - 2t) \cdot (D_z - 2t)]$$

$A = 3.75\,in^2$ *(Cross Sectional Area)*

$$I_y := \frac{1}{12} \cdot D_y \cdot D_z^3 - \frac{1}{12} \cdot (D_y - 2t) \cdot (D_z - 2t)^3$$

$I_y = 8.828\,in^4$ *(Moment of Inertia about Y)*

$I_z := I_y$ *(Moment of Inertia about Z)*

$$Q_y := D_z \cdot t \cdot \left(\frac{D_z}{2} - \frac{t}{2}\right) + t \cdot \left(\frac{D_z}{2} - t\right)^2$$

$Q_y = 2.641\,in^3$ *(First Moment of Area at Y-Y)*

$Q_z := Q_y$ $\quad Q_y = 2.641\,in^3$ *(First Moment of Area at Z-Z)*

$S_y := \frac{I_y}{.5 \cdot D_z}$ $\quad S_y = 4.414\ in^3$ *(Section Modulus about Y-Y)*

$S_z := \frac{I_z}{.5 \cdot D_y}$ $\quad S_z = 4.414\ in^3$ *(Section Modulus about Z-Z)*

$J_r := 2 \cdot t \cdot (D_z - t) \cdot (D_y - t)$ $\quad J_r = 7.031\ in^3$ *(Torsional Constant, Ref Roark, 7th Edition, Table 10.1, Case 16)*

$R_y := \sqrt{\frac{I_y}{A}}$ $\quad R_y = 1.534\ in$ *(Radius of Gyration about Y)*

$R_z := \sqrt{\frac{I_z}{A}}$ $\quad R_z = 1.534\ in$ *(Radius of Gyration about Z)*

$K := 1.0$ *(Effective Length Factor for Column, assuming a pin ended beam. Ref Structural Engineering Handbook, 4th Edition, Figure 5, pg. 8-10)*

$SR_y := \frac{K \cdot L}{R_y}$ $\quad SR_y = 34.087$ *(Slenderness Ratio, Y)*

$SR_z := \frac{K \cdot L}{R_z}$ $\quad SR_z = 34.087$ *(Slenderness Ratio, Z)*

CALCULATE ALLOWABLE LOADS:

The following constants are calculated per the *Structural Engineering Handbook, 4th Edition*, Formulas 5a-c, pg. 11-6 in order to calculate the allowable compressive stresses for the beam.

$B_c := F_{cy} \cdot \left(1 + \sqrt{\frac{F_{cy}}{2250 \cdot ksi}}\right)$ $\quad B_c = 66.816\ ksi$

$D_c := \frac{B_c}{10} \cdot \sqrt{\frac{B_c}{E_c}}$ $\quad D_c = 0.533\ ksi$

$C_c := 0.41 \cdot \frac{2 \cdot B_c}{3 \cdot D_c}$ $\quad C_c = 34.242$

The allowable compressive loads are calculated using the above constants to approximate the tangent-modulus column formula if the slenderness ratio is less than the constant C_c. Otherwise, the allowable is calculated using the Euler column formula.

$$F_{cy} := \begin{cases} B_c - D_c \cdot SR_y & \text{if } SR_y \le C_c \\ E_c \cdot \left(\frac{\pi}{SR_y}\right)^2 & \text{otherwise} \end{cases}$$

$F_{cy} = 48.636\,\text{ksi}$ *(Allowable Compressive Stress Based on Slenderness Ratio about Y)*

$$F_{cz} := \begin{cases} B_c - D_c \cdot SR_z & \text{if } SR_z \le C_c \\ E_c \cdot \left(\frac{\pi}{SR_z}\right)^2 & \text{otherwise} \end{cases}$$

$F_{cz} = 48.636\,\text{ksi}$ *(Allowable Compressive Stress Based on Slenderness Ratio about Z)*

$P_{cr} := \min(F_{cz} \cdot A, F_{cy} \cdot A)$ $P_{cr} = 182384.22\,\text{lbf}$ *(Allowable Compressive Axial Load)*

$P_t := F_{tu} \cdot A$ $P_t = 237150\,\text{lbf}$ *(Allowable Tensile Load)*

The allowable shear load is calculated per *Roarks Formulas for Stress and Strain*, Seventh Edition, Eq 8.1-2:

$\tau = \frac{V \cdot A \cdot dy}{I \cdot b}$ where: $b := 2t$ and $A \cdot dy = Q$, the first moment of area of the section

Therefore, the maximum allowable shear load is:

$V_{uy} := F_{su} \cdot \frac{I_z \cdot b}{Q_z}$ $V_{uy} = 62885.503\,\text{lbf}$ *(Allowable Shear Load in Y)*

$V_{uz} := F_{su} \cdot \frac{I_y \cdot b}{Q_z}$ $V_{uz} = 62885.503\,\text{lbf}$ *(Allowable Shear Load in Z)*

The allowable torsional load is calculated per *Roarks Formulas for Stress and Strain,* Seventh Edition, Table 10.1, Case 16

$\tau_{avg} = \frac{T}{2t \cdot (D_y - t) \cdot (D_z - t)}$ where J_r has previously been defined as $J_r := 2 \cdot t \cdot (D_z - t) \cdot (D_y - t)$

Therefore, the maximum allowable torsional load is:

$T_u := F_{su} \cdot J_r$ $T_u = 264515.625\,\text{in} \cdot \text{lbf}$ *(Allowable Torsion Load)*

Allowable bending loads are calculated using the shape factor (f) which is defined for various cross sections in *Structural Engineering Handbook,* 4th Edition, Table 7, pg.11-15:

$f := 1.22$ *(Shape Factor for Hollow Rectangular Tube)*

$M_{uy} := S_y \cdot \left[F_{tu} + (f - 1) \cdot F_{ty}\right]$ $M_{uy} = 331730.039\ in \cdot lbf$ *(Allowable Bending Moment about Y)*

$M_{uz} := S_z \cdot \left[F_{tu} + (f - 1) \cdot F_{ty}\right]$ $M_{uz} = 331730.039\ in \cdot lbf$ *(Allowable Bending Moment about Z)*

In order to calculate a combined Bending and Axial margin of safety, the following factors are calculated per the *Structural Engineering Handbook,* 4th Edition, pg.11-25.

$F_{ey} := \dfrac{102000 \cdot ksi}{SF_u \cdot SR_y^{\ 2}}$ $F_{ey} = 62.706\ ksi$

$F_{ez} := \dfrac{102000 \cdot ksi}{SF_u \cdot SR_z^{\ 2}}$ $F_{ez} = 62.706\ ksi$

$P_{ey} := F_{ey} \cdot A$ $P_{ey} = 235145.803\ lbf$

$P_{ez} := F_{ez} \cdot A$ $P_{ez} = 235145.803\ lbf$

IMPORT LOADS:

NASPOST was used to output all element loads for the Sill Tube into a file named "silltube.lis". This file is located at /hsm/bsommer/ams/naspost/uss/2-04/. The file "SillTube.txt" was generated from the NASPOST output with the headers and formatting removed.

$load := READPRN(\text{"SillTube.txt"})$ $i := 1 .. rows(load)$

$ID := load^{\langle 1 \rangle}$ *(Element ID)* $LC := load^{\langle 2 \rangle}$ *(Load Case Number)*

$M_{1a} := load^{\langle 3 \rangle} \cdot in \cdot lbf$ $M_{1b} := load^{\langle 9 \rangle} \cdot in \cdot lbf$ *(Moment About Element Z Axis at Ends A and B)*

$M_{2a} := load^{\langle 4 \rangle} \cdot in \cdot lbf$ $M_{2b} := load^{\langle 10 \rangle} \cdot in \cdot lbf$ *(Moment About Element Y Axis at Ends A and B)*

$V_{1a} := load^{\langle 5 \rangle} \cdot lbf$ $V_{1b} := load^{\langle 11 \rangle} \cdot lbf$ *(Shear Force in Element Y Direction at Ends A and B)*

$V_{2a} := load^{\langle 6 \rangle} \cdot lbf$ $V_{2b} := load^{\langle 12 \rangle} \cdot lbf$ *(Shear Force in Element Z Direction at Ends A and B)*

$P_a := load^{\langle 7 \rangle} \cdot lbf$ $P_b := load^{\langle 13 \rangle} \cdot lbf$ *(Axial Load at Ends A and B)*

$T := load^{\langle 8 \rangle} \cdot in \cdot lbf$ *(Total Torque)*

CALCULATE COMBINED MARGINS OF SAFETY:

$$RS_{a_i} := \frac{\left|V_{1a_i}\right|}{V_{uy}} + \frac{\left|V_{2a_i}\right|}{V_{uz}} + \frac{T_i}{T_u}$$ *(Shear Ratio at End A)*

$$RS_{b_i} := \frac{\left|V_{1b_i}\right|}{V_{uy}} + \frac{\left|V_{2b_i}\right|}{V_{uz}} + \frac{T_i}{T_u}$$ *(Shear Ratio at End B)*

$$RT_{a_i} := \begin{cases} \dfrac{\left|P_{a_i}\right|}{P_t} + \dfrac{\left|M_{2a_i}\right|}{M_{uy}} + \dfrac{\left|M_{1a_i}\right|}{M_{uz}} & \text{if } P_{a_i} \geq 0 \cdot lbf \\ \dfrac{\left|P_{a_i}\right|}{P_{cr}} + \dfrac{\left|M_{2a_i}\right|}{M_{uy}} \cdot \dfrac{1}{1 - \dfrac{\left|P_{a_i}\right|}{P_{ey}}} + \dfrac{\left|M_{1a_i}\right|}{M_{uz}} \cdot \dfrac{1}{1 - \dfrac{\left|P_{a_i}\right|}{P_{ez}}} & \text{otherwise} \end{cases}$$ *(Tensile Ratio at End A)*

$$RT_{b_i} := \begin{cases} \dfrac{\left|P_{b_i}\right|}{P_t} + \dfrac{\left|M_{2b_i}\right|}{M_{uy}} + \dfrac{\left|M_{1b_i}\right|}{M_{uz}} & \text{if } P_{a_i} \geq 0 \cdot lbf \\ \dfrac{\left|P_{b_i}\right|}{P_{cr}} + \dfrac{\left|M_{2b_i}\right|}{M_{uy}} \cdot \dfrac{1}{1 - \dfrac{\left|P_{b_i}\right|}{P_{ey}}} + \dfrac{\left|M_{1b_i}\right|}{M_{uz}} \cdot \dfrac{1}{1 - \dfrac{\left|P_{b_i}\right|}{P_{ez}}} & \text{otherwise} \end{cases}$$ *(Tensile Ratio at End B)*

$$RATIO_{a_i} := \sqrt{\left(RT_{a_i}\right)^2 + \left(RS_{a_i}\right)^2}$$

$$RATIO_{b_i} := \sqrt{\left(RT_{b_i}\right)^2 + \left(RS_{b_i}\right)^2}$$

$$RATIO_i := \text{if}\left(RATIO_{a_i} \geq RATIO_{b_i}, RATIO_{a_i}, RATIO_{b_i}\right)$$

$$MS_i := \frac{1}{RATIO_i \cdot SF_u} - 1$$

$\boxed{\min(MS) = 4.267}$ ***...Minimum Combined Margin of Safety***

DETERMINE WORST LOAD CASE AND ELEMENT:

$cases := \text{augment}(ID, LC, MS)$ $\qquad$ $sorted_cases := \text{csort}(cases, 3)$

$$\left(sorted_cases^T\right)^{\langle 1 \rangle} = \begin{pmatrix} 1703 \\ 1032 \\ 4.267 \end{pmatrix}$$

(Element ID)
(Load Case)
(Margin of Safety)

2.1.12 Diagonal Sill Bracket

Prepared By	Name	Date		File Name
	J.Edgecombe	01/26/06		Diagonal Sill Bracket.xmcd
Checked By	C.Bala		**Engineering and Science Contract Group** *Structural Analysis Section*	Drawing No. SDG39135740
Title	Stress Analysis for Diagonal Sill Bracket			

COMPONENT: USS-02 Diagonal Sill Bracket, SDG39135740

MINIMUM MARGINS OF SAFETY:

PART	Material	Elem ID	Subcase	MSu	Page
Diag. Sill Bracket	Al 7050-T7451	1721	1032	0.411	2.1.12-13

INTRODUCTION:

The Diagonal Sill Bracket is connected to the Sill Tube and Diagonal Strut at one end and to the Sill Joint at the other end. Figure 1 highlights these components which are on the Upper USS-02 Assembly. The diagonal sill bracket, which is manufactured from Al Aly 7050-T7451 6" plate, is riveted to the Sill Tube and bolted to the Sill Joint. There is an integrally machined clevis on the diagonal sill joint to attach the diagonal strut by a clevis pin.

LOADS:

Loads to the Diagonal Sill Bracket have been taken from the NASPOST output from the 2-04 loads model. The original NASPOST results (located at /hsm/bsommer/ams/naspost/uss/2-04/diagsillbracket.lis) have been re-formatted to remove headers and create a reformatted file (diagsillbracket_mc.txt) for import into MathCAD.

ANALYSIS METHOD:

The loads obtained from the Loads Model are applied to the diagonal sill bracket using classical hand calculation methods. The bracket will be checked at two cross sections.

FACTORS OF SAFETY

A factor of safety of 1.4 is used on ultimate and 1.1 on yield. The temperature reduction factor at 140 def F is 0.92 for ultimate and 0.97 for yield.

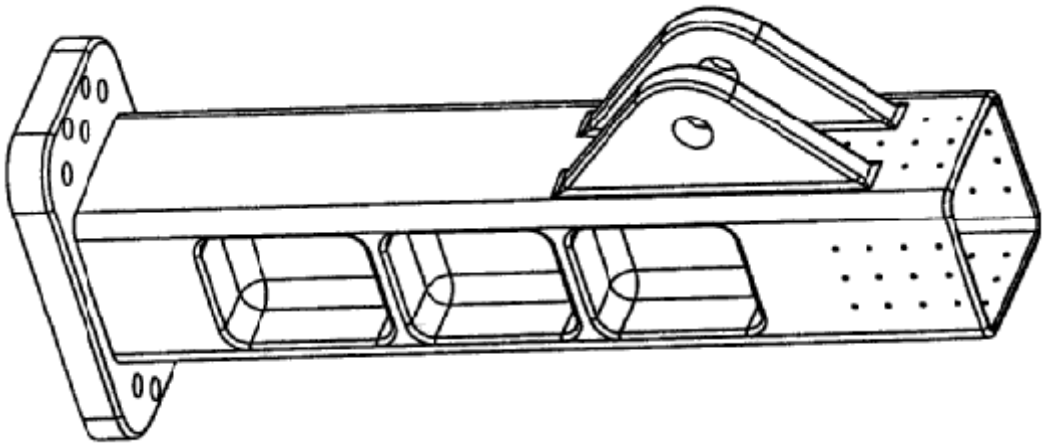

Figure 1: Diagonal Sill Bracket

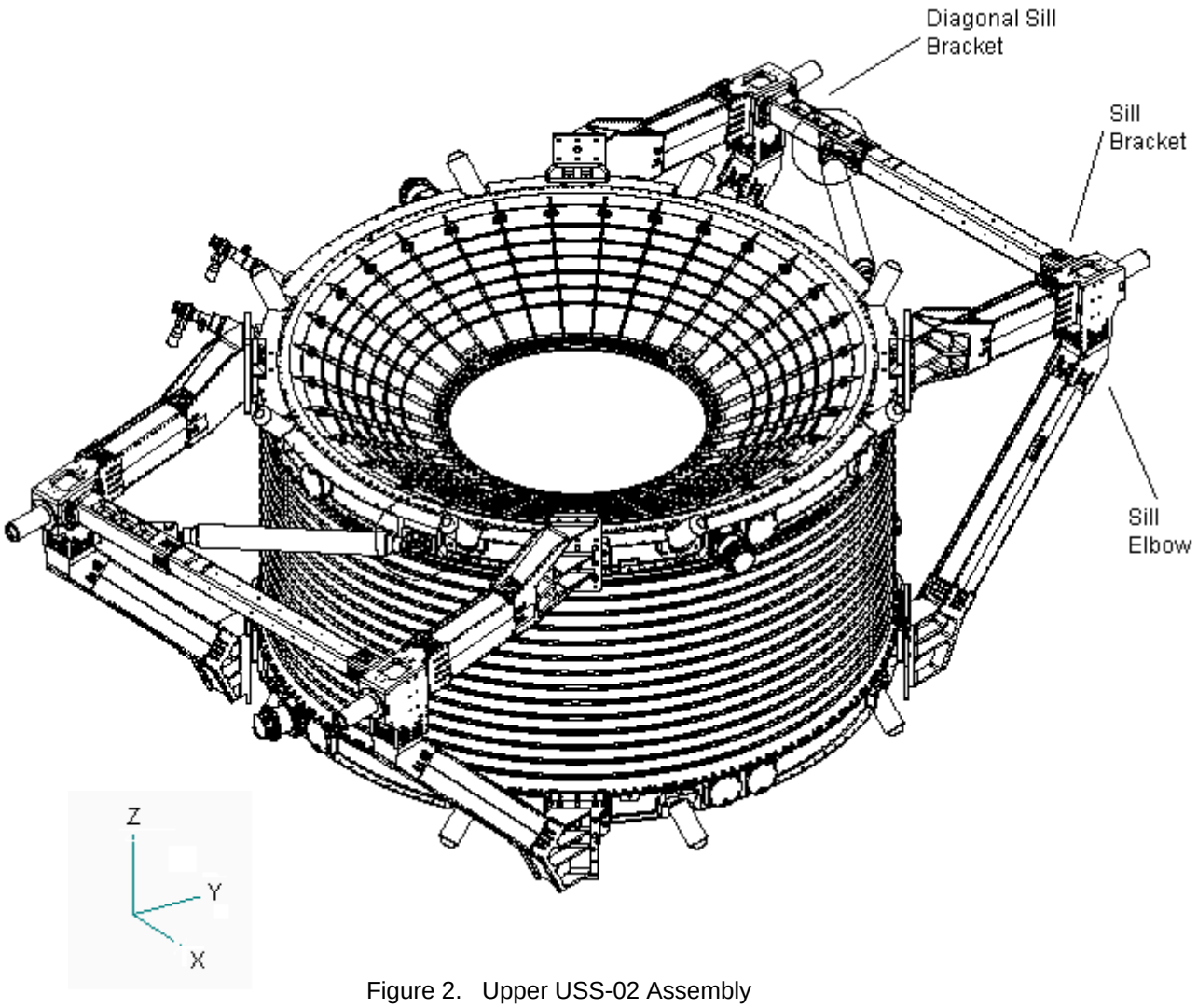

Figure 2. Upper USS-02 Assembly

Prepared By	Name	Date	Engineering and Science Contract Group	File Name
	J.Edgecombe	01/26/06		Diagonal Sill Bracket.xmcd
Checked By	C.Bala		*Structural Analysis Section*	Drawing No. SDG39135740
Title	Stress Analysis for Diagonal Sill Bracket			

PART: Diagonal Sill Bracket, at Section A-A

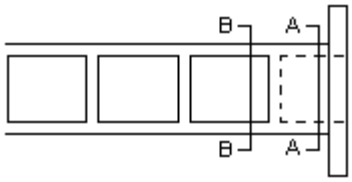

ANALYSIS: Shear & Bending, Launch/ Landing Loads

FACTORS OF SAFETY:

$SF_u := 1.4$ $\quad SF_y := 1.1$ *(Ultimate and Yield Factors of Safety)*

MATERIAL PROPERTIES: 7050-T7451 Aluminum, 5"-6" Thick Plate @150F per MMPDS-01

$TD_u := 92\%$ $\quad TD_y := 97\%$ *(Ultimate and Yield Thermal Degradation Factors)*

$F_{tu} := TD_u \cdot 66 \cdot ksi$ $\quad F_{tu} = 60.72\ ksi$ *(Ultimate Tensile Strength)*

$F_{ty} := TD_y \cdot 57 \cdot ksi$ $\quad F_{ty} = 55.29\ ksi$ *(Tensile Yield Strength)*

$F_{su} := TD_u \cdot 43 \cdot ksi$ $\quad F_{su} = 39.56\ ksi$ *(Ultimate Shear Strength)*

PART GEOMETRY: (At Section A-A)

$b := 4.562 \cdot in$ *(Section Width)*

$b_1 := 3 \cdot in$ *(Tube Bore Width)*

$h := 4.562 \cdot in$ *(Section Height)*

$h_1 := 3.25 \cdot in$ *(Tube Bore Height)*

$A_{aa} := b \cdot h - b_1 \cdot h_1$

$A_{aa} = 11.062\ in^2$ *(Cross Sectional Area at A-A)*

$I_{aa_y} := \frac{1}{12} \cdot \left(b \cdot h^3 - b_1 \cdot h_1^3\right)$

$I_{aa_y} = 27.512\ in^4$ *(Moment of Inertia about Y at Section A-A)*

$I_{aa_z} := \frac{1}{12} \cdot \left(h \cdot b^3 - h_1 \cdot b_1^3\right)$

$I_{aa_z} = 28.782\ in^4$ *(Moment of Inertia about Z at Section A-A)*

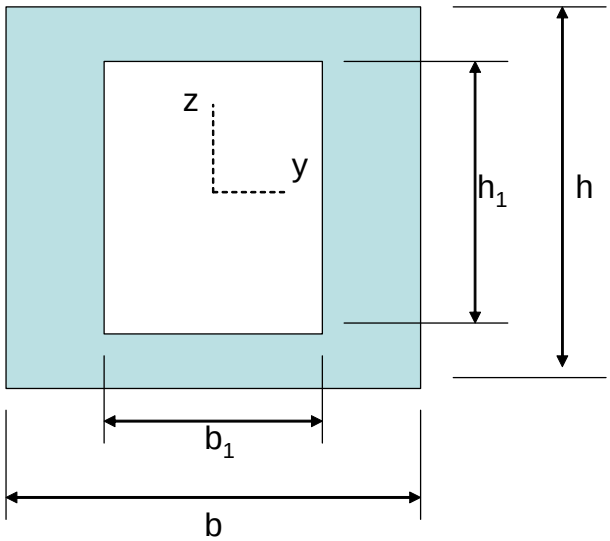

Prepared By	Name	Date	Engineering and Science Contract Group	File Name
	J.Edgecombe	01/26/06		Diagonal Sill Bracket.xmcd
Checked By	C.Bala		*Structural Analysis Section*	Drawing No. SDG39135740
Title	Stress Analysis for Diagonal Sill Bracket			

LOADS

Loads to the Diagonal Sill Bracket at section A-A are taken from the NASPOST output found in /hsm/bsommer/ams/naspost/uss/2-04/diagsillbracket.lis. This output has been reformatted for import into MathCAD in the file diagsillbracket_mc.txt. Section A-A of the bracket corresponds to side A of beam elements 1721 and 1722 as shown below.

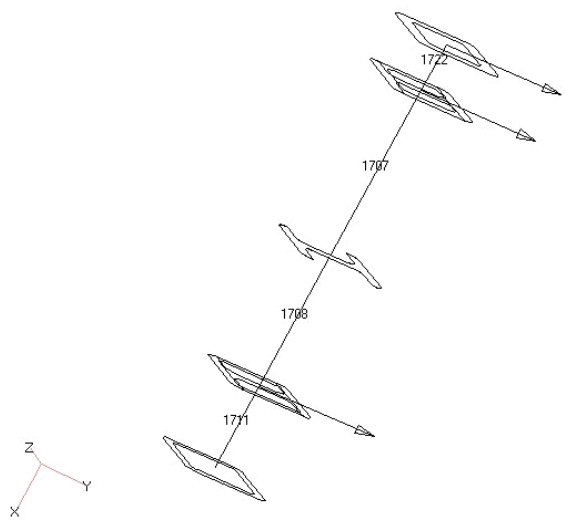

Diagonal Sill Bracket (-y side)

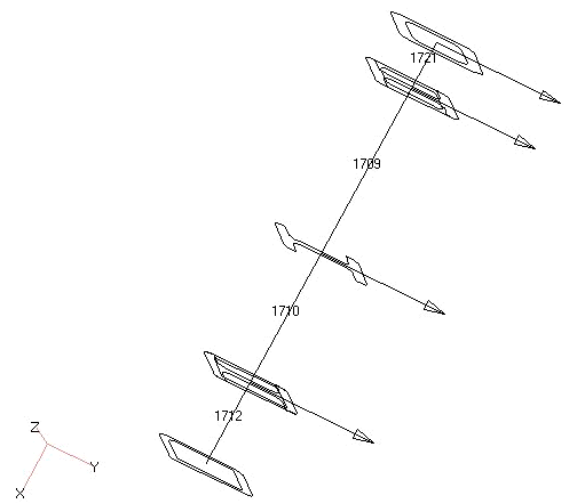

Diagonal Sill Bracket (+y side)

$Load := READPRN("diagsillbracket_mc.txt")$

$Sorted_Loads := csort(Load, 1)$ *(Sort Loads by Element ID)*

$ncases := 192$ *(Number of Load Cases)*

$nelem := 8$ *(Number of Elements in Matrix)*

$r_1 := 6 \cdot ncases + 1$ *(First Row of Data for Element 1721)*

$r_2 := nelem \cdot ncases$ *(Last Row of Data for Element 1722)*

$Load_{aa} := submatrix(Sorted_Loads, r_1, r_2, 1, cols(Load))$

$i := 1 .. rows(Load_{aa})$

$ID := Load_{aa}^{\langle 1 \rangle}$ *(Element ID)*

$LC := Load_{aa}^{\langle 2 \rangle}$ *(Load Case)*

$M_{1a} := Load_{aa}^{\langle 3 \rangle} \cdot in \cdot lbf$ *(Moment about Z axis at end A)*

$M_{2a} := Load_{aa}^{\langle 4 \rangle} \cdot in \cdot lbf$ *(Moment about Y axis at end A)*

$V_{1a} := Load_{aa}^{\langle 5 \rangle} \cdot lbf$ *(Shear in Y direction at end A)*

$V_{2a} := Load_{aa}^{\langle 6 \rangle} \cdot lbf$ *(Shear in Z direction at end A)*

$P_a := Load_{aa}^{\langle 7 \rangle} \cdot lbf$ *(Tensile Load)*

$T_a := Load_{aa}^{\langle 8 \rangle} \cdot in \cdot lbf$ *(Torsional Load)*

Prepared By	Name	Date	Engineering and Science Contract Group	File Name
	J.Edgecombe	01/26/06		Diagonal Sill Bracket.xmcd
Checked By	C.Bala		*Structural Analysis Section*	Drawing No. SDG39135740
Title	Stress Analysis for Diagonal Sill Bracket			

STRESS AND MARGINS OF SAFETY AT SECTION A-A

$$\sigma_{a_i} := \frac{|P_{a_i}|}{A_{aa}} + \frac{|M_{2a_i}|\cdot h}{2\cdot I_{aa_y}} + \frac{|M_{1a_i}|\cdot b}{2\cdot I_{aa_z}}$$ $\max(\sigma_a) = 24844.959$ psi *(Maximum Tensile Stress)*

$$\tau_{a1_i} := \frac{\sqrt{(V_{1a_i})^2 + (V_{2a_i})^2}}{A_{aa}}$$ $\max(\tau_{a1}) = 1873.409$ psi *(Maximum Shear Stress due to Transverse Load)*

$$\tau_{a2_i} := \frac{|T_{a_i}|}{2\cdot\left(\frac{h - h_1}{2}\right)\cdot b_1\cdot h_1}$$ $\max(\tau_{a2}) = 126.407$ psi *(Maximum Shear Stress due to Torsional Load, Ref. Roark, 7th Edition, Table 10.1, Case 16)*

$$\tau_{a_i} := \tau_{a1_i} + \tau_{a2_i}$$ $\max(\tau_a) = 1990.279$ psi *(Combined Shear Stress)*

$$\sigma_{max_p_i} := \frac{\sigma_{a_i}}{2} + \sqrt{\left(\frac{\sigma_{a_i}}{2}\right)^2 + (\tau_{a_i})^2}$$ $\max(\sigma_{max_p}) = 25003.386$ psi *(Maximum Principal Stress)*

$$\sigma_{min_p_i} := \frac{\sigma_{a_i}}{2} - \sqrt{\left(\frac{\sigma_{a_i}}{2}\right)^2 + (\tau_{a_i})^2}$$ $\min(\sigma_{min_p}) = -158.783$ psi *(Minimum Principal Stress)*

$$\sigma_{vm_i} := \sqrt{(\sigma_{a_i})^2 + (3\cdot\tau_{a_i})^2}$$ $\max(\sigma_{vm}) = 25552.356$ psi *(Maximum Von Mises Stress, Ref. Bruhn, Section C1.17, Eq 32)*

$$\tau_{max_i} := \sqrt{\left(\frac{\sigma_{a_i}}{2}\right)^2 + (\tau_{a_i})^2}$$ $\max(\tau_{max}) = 12580.906$ psi *(Maximum Shear Stress)*

$$MS_{u_i} := \frac{F_{tu}}{SF_u\cdot\sigma_{max_p_i}} - 1$$ $\min(MS_u) = 0.735$ ***... Minimum Ultimate Margin of Safety***

$$MS_{y_i} := \frac{F_{ty}}{SF_y\cdot\sigma_{vm_i}} - 1$$ $\min(MS_y) = 0.967$ ***... Minimum Yield Margin of Safety***

$$MS_{s_i} := \frac{F_{su}}{SF_u\cdot\tau_{max_i}} - 1$$ $\min(MS_s) = 1.246$ ***... Minimum Shear Margin of Safety***

DETERMINE WORST LOAD CASE AND ELEMENT:

$cases := augment(ID, LC, MS_u)$ $\quad$ $sorted_cases := csort(cases, 3)$

$$\left(sorted_cases^T\right)^{\langle 1\rangle} = \begin{pmatrix} 1721 \\ 1032 \\ 0.735 \end{pmatrix}$$

(Element ID)
(Load Case)
(Margin of Safety)

Prepared By	Name	Date	Engineering and Science Contract Group	File Name
	J.Edgecombe	01/26/06		Diagonal Sill Bracket.xmcd
Checked By	C.Bala		*Structural Analysis Section*	Drawing No. SDG39135740
Title	Stress Analysis for Diagonal Sill Bracket			

PART: Diagonal Sill Bracket, at Section B-B

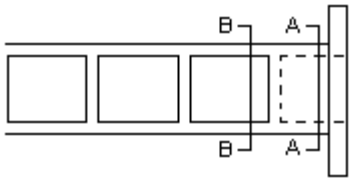

ANALYSIS: Shear & Bending, Launch/ Landing Loads

FACTORS OF SAFETY:

$SF_u := 1.4$ $\quad SF_y := 1.1$ *(Ultimate and Yield Factors of Safety)*

MATERIAL PROPERTIES: 7050-T7451 Aluminum, 5"-6" Thick Plate @150F per MMPDS-01

$TD_u := 92\%$ $\quad TD_y := 97\%$ *(Ultimate and Yield Thermal Degradation Factors)*

$F_{tu} := TD_u \cdot 66 \cdot ksi$ $\quad F_{tu} = 60.72\ ksi$ *(Ultimate Tensile Strength)*

$F_{ty} := TD_y \cdot 57 \cdot ksi$ $\quad F_{ty} = 55.29\ ksi$ *(Tensile Yield Strength)*

$F_{su} := TD_u \cdot 43 \cdot ksi$ $\quad F_{su} = 39.56\ ksi$ *(Ultimate Shear Strength)*

PART GEOMETRY: (At Section B-B)

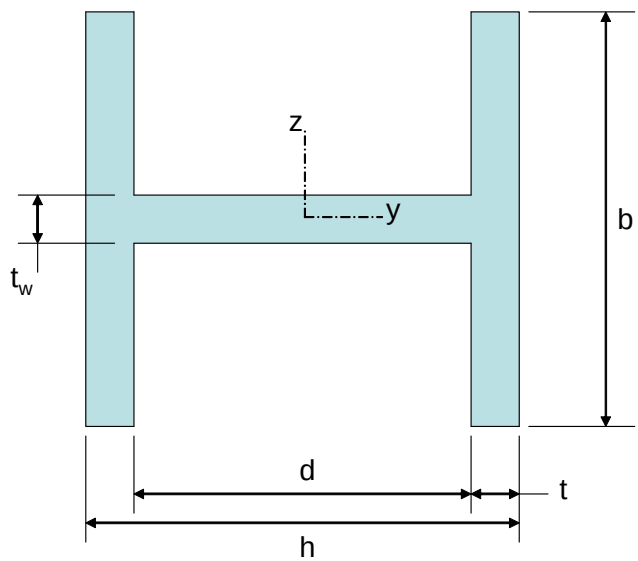

$b := 4.562 \cdot in$ *(Flange Width)*

$d := 3 \cdot in$ *(Web Height)*

$t_w := .812 \cdot in$ *(Web Thickness)*

$t := \dfrac{4.562 \cdot in - d}{2}$ *(Flange Thickness)*

$h = 4.562\ in$ *(Beam Height)*

$A_{bb} := 2 \cdot b \cdot t + t_w \cdot d$

$A_{bb} = 9.562\ in^2$ *(Cross Sectional Area at B-B)*

$I_{bb_y} := \dfrac{b^3 \cdot t}{6} + \dfrac{t_w^3 \cdot d}{12}$

$I_{bb_y} = 12.492\ in^4$ *(Moment of Inertia about Y at Section B-B)*

$I_{bb_z} := \dfrac{b \cdot (d + 2t)^3}{12} - \dfrac{(b - t_w) \cdot d^3}{12}$

$I_{bb_z} = 27.657\ in^4$ *(Moment of Inertia about Z at Section B-B)*

$J := \dfrac{1}{3} \cdot \left(b \cdot t^3 + b \cdot t^3 + d \cdot t_w^3\right)$

$J = 1.984\ in^4$ *(Torsional Constant at Section B-B, Ref Bruhn, A6-6)*

Prepared By	Name	Date	Engineering and Science Contract Group	File Name
	J.Edgecombe	01/26/06		Diagonal Sill Bracket.xmcd
Checked By	C.Bala		*Structural Analysis Section*	Drawing No. SDG39135740
Title	Stress Analysis for Diagonal Sill Bracket			

LOADS

Loads to the Diagonal Sill Bracket at section B-B are taken from the NASPOST output found in /hsm/bsommer/ams/naspost/uss/2-04/diagsillbracket.lis. This output has been reformatted for import into MathCAD in the file diagsillbracket_mc.txt. Section B-B of the bracket corresponds to side B of beam elements 1721 and 1722 as shown below.

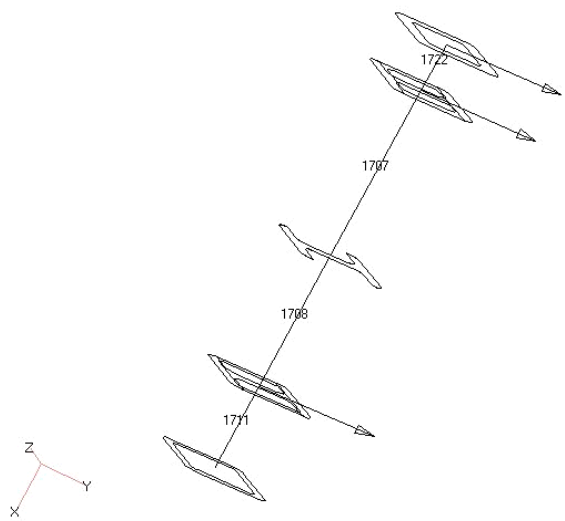

Diagonal Sill Bracket (-y side)

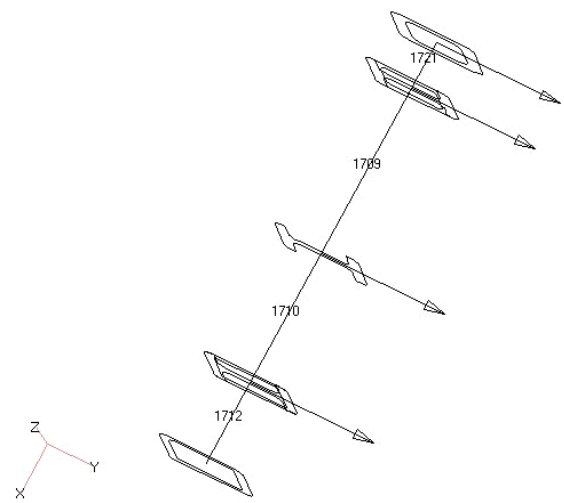

Diagonal Sill Bracket (+y side)

$Load := READPRN("diagsillbracket_mc.txt")$

$Sorted_Loads := csort(Load, 1)$ *(Sort Loads by Element ID)*

$ncases := 192$ *(Number of Load Cases)*

$nelem := 8$ *(Number of Elements in Matrix)*

$r_1 := 6 \cdot ncases + 1$ *(First Row of Data for Element 1721)*

$r_2 := nelem \cdot ncases$ *(Last Row of Data for Element 1722)*

$Load_{bb} := submatrix(Sorted_Loads, r_1, r_2, 1, cols(Load))$

$i := 1 .. rows(Load_{bb})$

$ID := Load_{bb}^{\langle 1 \rangle}$ *(Element ID)*

$LC := Load_{bb}^{\langle 2 \rangle}$ *(Load Case)*

$M_{1b} := Load_{bb}^{\langle 9 \rangle} \cdot in \cdot lbf$ *(Moment about Z axis at end B)*

$M_{2b} := Load_{bb}^{\langle 10 \rangle} \cdot in \cdot lbf$ *(Moment about Y axis at end B)*

$V_{1b} := Load_{bb}^{\langle 11 \rangle} \cdot lbf$ *(Shear in Y direction at end B)*

$V_{2b} := Load_{bb}^{\langle 12 \rangle} \cdot lbf$ *(Shear in Z direction at end B)*

$P_b := Load_{bb}^{\langle 13 \rangle} \cdot lbf$ *(Tensile Load)*

$T_b := Load_{bb}^{\langle 14 \rangle} \cdot in \cdot lbf$ *(Torsional Load)*

Prepared By	Name	Date	Engineering and Science Contract Group	File Name
	J.Edgecombe	01/26/06		Diagonal Sill Bracket.xmcd
Checked By	C.Bala		*Structural Analysis Section*	Drawing No. SDG39135740
Title	Stress Analysis for Diagonal Sill Bracket			

STRESS AND MARGINS OF SAFETY AT SECTION B-B

$$\sigma_{b_i} := \frac{\left|P_{b_i}\right|}{A_{bb}} + \frac{\left|M_{2b_i}\right| \cdot b}{2 \cdot I_{bb_y}} + \frac{\left|M_{1b_i}\right| \cdot h}{2 \cdot I_{bb_z}}$$ $\max(\sigma_b) = 23963.424\ \text{psi}$ *(Maximum Tensile Stress)*

$$\tau_{b1_i} := \frac{\sqrt{\left(V_{1b_i}\right)^2 + \left(V_{2b_i}\right)^2}}{A_{bb}}$$ $\max(\tau_{b1}) = 2167.298\ \text{psi}$ *(Maximum Shear Stress due to Transverse Load)*

$$\tau_{b2_i} := \frac{3\left|T_{b_i}\right| \cdot \max(t, t_w)}{J}$$ $\max(\tau_{b2}) = 1985.173\ \text{psi}$ *(Maximum Shear Stress due to Torsional Load, Ref. Bruhn, Section A6.6)*

$$\tau_{b_i} := \tau_{b1_i} + \tau_{b2_i}$$ $\max(\tau_b) = 4002.692\ \text{psi}$ *(Combined Shear Stress)*

$$\sigma_{max_p_i} := \frac{\sigma_{b_i}}{2} + \sqrt{\left(\frac{\sigma_{b_i}}{2}\right)^2 + \left(\tau_{b_i}\right)^2}$$ $\max(\sigma_{max_p}) = 24614.328\ \text{psi}$ *(Maximum Principal Stress)*

$$\sigma_{min_p_i} := \frac{\sigma_{b_i}}{2} - \sqrt{\left(\frac{\sigma_{b_i}}{2}\right)^2 + \left(\tau_{b_i}\right)^2}$$ $\min(\sigma_{min_p}) = -684.656\ \text{psi}$ *(Minimum Principal Stress)*

$$\sigma_{vm_i} := \sqrt{\left(\sigma_{b_i}\right)^2 + \left(3 \cdot \tau_{b_i}\right)^2}$$ $\max(\sigma_{vm}) = 26803.724\ \text{psi}$ *(Maximum Von Mises Stress, Ref. Bruhn, Section C1.17, Eq 32)*

$$\tau_{max_i} := \sqrt{\left(\frac{\sigma_{b_i}}{2}\right)^2 + \left(\tau_{b_i}\right)^2}$$ $\max(\tau_{max}) = 12632.616\ \text{psi}$ *(Maximum Shear Stress)*

$$MS_{u_i} := \frac{F_{tu}}{SF_u \cdot \sigma_{max_p_i}} - 1$$ $\min(MS_u) = 0.762$ ***... Minimum Ultimate Margin of Safety***

$$MS_{y_i} := \frac{F_{ty}}{SF_y \cdot \sigma_{vm_i}} - 1$$ $\min(MS_y) = 0.875$ ***... Minimum Yield Margin of Safety***

$$MS_{s_i} := \frac{F_{su}}{SF_u \cdot \tau_{max_i}} - 1$$ $\min(MS_s) = 1.237$ ***... Minimum Shear Margin of Safety***

DETERMINE WORST LOAD CASE AND ELEMENT:

$\text{cases} := \text{augment}(ID, LC, MS_u)$ $\quad$ $\text{sorted_cases} := \text{csort}(\text{cases}, 3)$

$$\left(\text{sorted_cases}^T\right)^{\langle 1 \rangle} = \begin{pmatrix} 1721 \\ 1032 \\ 0.762 \end{pmatrix}$$

(Element ID)
(Load Case)
(Margin of Safety)

Prepared By	Name	Date	Engineering and Science Contract Group	File Name
	J.Edgecombe	01/26/06		Diagonal Sill Bracket.xmcd
Checked By	C.Bala		*Structural Analysis Section*	Drawing No. SDG39135740
Title	Stress Analysis for Diagonal Sill Bracket			

PART: Diagonal Sill Bracket, at Diagonal Strut Clevis

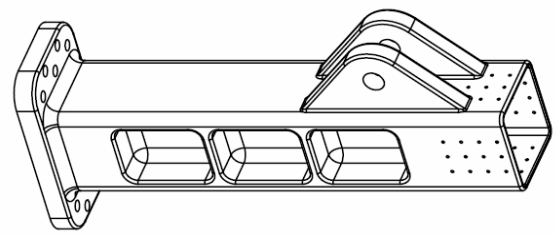

ANALYSIS: Lug Analysis, Launch/ Landing Loads

FACTORS OF SAFETY:

$SF_u := 1.4$ $\quad SF_y := 1.1$ *(Ultimate and Yield Factors of Safety)*

MATERIAL PROPERTIES: 7050-T7451 Aluminum, 5"-6" Thick Plate @150F per MMPDS-01

$TD_u := 92\%$ $\quad TD_y := 97\%$ *(Ultimate and Yield Thermal Degradation Factors)*

$F_{tu} := TD_u \cdot 66 \cdot ksi$ $\quad F_{tu} = 60.72\ ksi$ *(Ultimate Tensile Strength)*

$F_{ty} := TD_y \cdot 57 \cdot ksi$ $\quad F_{ty} = 55.29\ ksi$ *(Tensile Yield Strength)*

$F_{su} := TD_u \cdot 43 \cdot ksi$ $\quad F_{su} = 39.56\ ksi$ *(Ultimate Shear Strength)*

PART GEOMETRY:

$D := 1.005 \cdot in$ *(Diameter of Hole)*

$e := 5.56 \cdot in - 4.026 \cdot in$ $\quad e = 1.534\ in$ *(Edge Distance)*

$t := 1 \cdot in$ *(Thickness of Lug)*

$W := 2 \cdot 1.75 \cdot in$ $\quad W = 3.5\ in$ *(Width of Lug)*

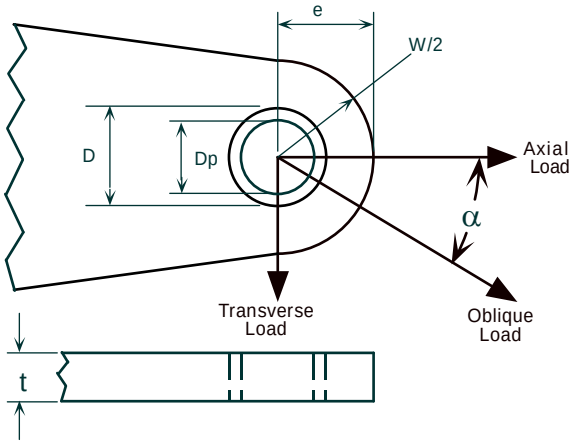

Typical Lug Dimensions and Loading

Shape Ratios:

$\frac{e}{D} = 1.526$ $\quad \frac{D}{t} = 1.005$ $\quad \frac{W}{D} = 3.483$

$A_{br} := D \cdot t$ $\quad A_{br} = 1.005\ in^2$ *(Bearing Area)*

$A_t := (W - D) \cdot t$ $\quad A_t = 2.495\ in^2$ *(Tensile Area)*

$\alpha := 69.69 \cdot deg$ *(Angle of Applied Force)*

LOADS:

Loads to the diagonal strut clevis are taken from the 2-04 loads model. The Diagonal Struts are represented by two CBEAM elements in the loads model: elements 1801 and 1803. Since the strut includes rod end bearings at each end, loads to the strut act in the axial direction only. Using NASPOST, the finite element results were sorted to determine the maximum axial load in the struts which was found to be 34052.7 lbf. NASPOST output files are located in the files "diagstrutlaunch.lis", "diagstrutlanding.lis", and "diagstrutabortlanding.lis" in the folder /hsm/bsommer/ams/naspost/uss/2-04/.

$P := 34052.7 \cdot lbf$ *(Total Applied Load to Joint)*

$P_{axial} := \frac{P}{2} \cdot \cos(\alpha)$ $\quad P_{axial} = 5909.835\ lbf$ *(Axial Load per lug)*

$P_{transverse} := \frac{P}{2} \cdot \sin(\alpha)$ $\quad P_{transverse} = 15967.794\ lbf$ *(Transverse Load per lug)*

CALCULATE ALLOWABLE LOADS (Axial Load Component):

From *Astronautics Structures Manual*, Figure B.2.1.0-3, using: $\frac{e}{D} = 1.526$ $\frac{D}{t} = 1.005$

$K_{br} := 1.45$

$P_{bru} := K_{br} \cdot F_{tu} \cdot A_{br}$ $P_{bru} = 88484.22\ \text{lbf}$ *(Ultimate Bearing Load)*

From *Astronautics Structures Manual*, Figure B.2.1.0-4, Curve 4, using: $\frac{W}{D} = 3.483$

$K_t := 0.77$

$P_{tu} := K_t \cdot F_{tu} \cdot A_t$ $P_{tu} = 116652.228\ \text{lbf}$ *(Ultimate Tensile Load)*

From *Astronautics Structures Manual*, Figure B.2.1.0-5, using: $\frac{e}{D} = 1.526$

$K_{bry} := 1.53$

$P_{bry} := K_{bry} \cdot A_{br} \cdot F_{ty}$ $P_{bry} = 85016.668\ \text{lbf}$ *(Yield Bearing Load)*

COMPUTE ULTIMATE & YIELD LOAD RATIOS (actual/allowable)

using smaller of Ptu and Pbru for ultimate :

$$R_{bru} := \begin{cases} \frac{SF_u \cdot P_{axial}}{P_{tu}} & \text{if } P_{tu} < P_{bru} \\ \frac{SF_u \cdot P_{axial}}{P_{bru}} & \text{otherwise} \end{cases}$$

$R_{bru} = 0.094$

for yield:

$$R_{bry} := \frac{SF_y \cdot P_{axial}}{P_{bry}}$$

$R_{bry} = 0.076$

CALCULATE ALLOWABLE LOADS (Transverse Load Component):

$\beta := 45 \cdot deg$

Calculate lug section areas:

$A_1 := t \cdot \frac{W - D \cdot \sin(\beta)}{2}$ $\quad A_1 = 1.395\ in^2$

$A_2 := t \cdot \frac{W - D}{2}$ $\quad A_2 = 1.247\ in^2$

$A_3 := t \cdot \left(e - \frac{D}{2}\right)$ $\quad A_3 = 1.032\ in^2$

$A_4 := t \cdot \frac{W - D \cdot \sin(\beta)}{2}$ $\quad A_4 = 1.395\ in^2$

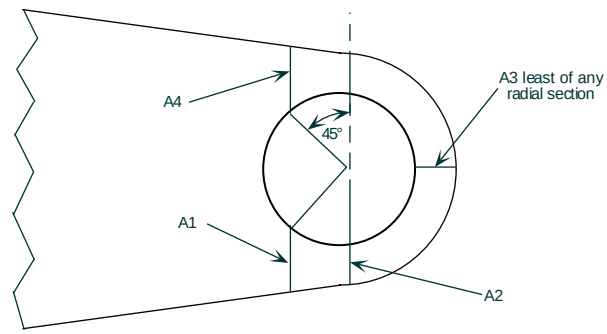

Areas of Lug for Calculating Shape Parameter

Calculate the weighted average area: $Aavg := \frac{6}{\frac{3}{A_1} + \frac{1}{A_2} + \frac{1}{A_3} + \frac{1}{A_4}}$ $\quad Aavg = 1.293\ in^2$

From above, the bearing area is: $A_{br} = 1.005\ in^2$

The shape parameter is: $\frac{Aavg}{A_{br}} = 1.287$

From *Astronautics Structures Manual*, Figure B.2.2.0-4, curve 8, using: $\frac{Aavg}{A_{br}} = 1.287$

$K_{tbru} := 0.53$

$P_{tbru} := K_{tbru} \cdot F_{tu} \cdot A_{br}$ $\quad P_{tbru} = 32342.508\ lbf$ *(Ultimate Transverse Bearing Load)*

From *Astronautics Structures Manual*, Figure B.2.2.0-4, using: $\frac{Aavg}{A_{br}} = 1.287$

$K_{tbry} := 1.26$

$P_{tbry} := K_{tbry} \cdot F_{ty} \cdot A_{br}$ $\quad P_{tbry} = 70013.727\ lbf$ *(Yield Transverse Bearing Load)*

COMPUTE ULTIMATE & YIELD LOAD RATIOS (actual/allowable)

ultimate: $R_{tbru} := \frac{SF_u \cdot P_{transverse}}{P_{tbru}}$ $\quad R_{tbru} = 0.691$

yield $R_{tbry} := \frac{SF_y \cdot P_{transverse}}{P_{tbry}}$ $\quad R_{tbry} = 0.251$

CALCULATE COMBINED MARGINS OF SAFETY: Ref *Astronautics Structures Manual*, section B2.3.0:

$$MS_u := \left(R_{bru}^{1.6} + R_{tbru}^{1.6}\right)^{-0.625} - 1$$

$MS_u = 0.411$ ... ***Margin of Safety on Combined Ultimate***

$$MS_y := \left(R_{bry}^{1.6} + R_{tbry}^{1.6}\right)^{-0.625} - 1$$

$MS_y = 2.654$ ... ***Margin of Safety on Combined Yield***

Prepared By	Name	Date	Engineering and Science Contract Group	File Name
	J.Edgecombe	01/26/06		Diagonal Sill Bracket.xmcd
Checked By	C.Bala		*Structural Analysis Section*	Drawing No. SDG39135740
Title	Stress Analysis for Diagonal Sill Bracket			

CALCULATE STRESS AND MARGIN OF SAFETY AT SECTION A-A

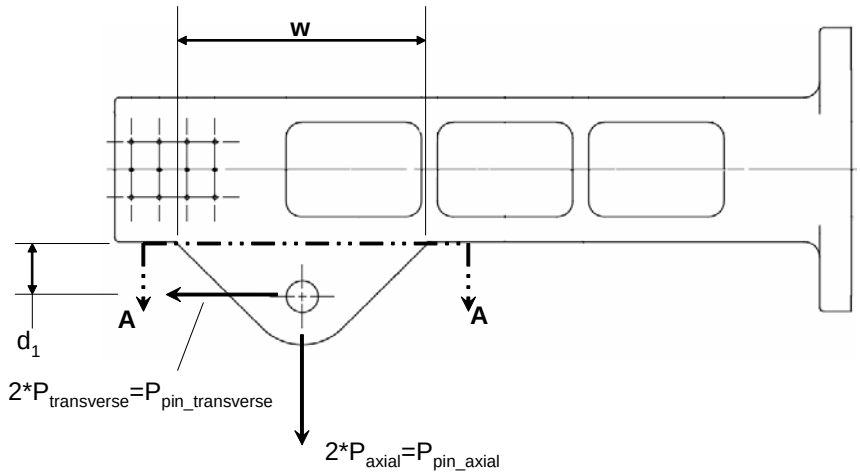

PART GEOMETRY:

$t_{lug} := 2 \cdot t$ $\quad t_{lug} = 2\,in$ *(Thickness of Section A-A, Two Lugs)*

$w := 8 \cdot in$ *(Section Width)*

$S := \frac{t_{lug} \cdot w^2}{6}$ $\quad S = 21.333\,in^3$ *(Section Modulus)*

$A := t_{lug} \cdot w$ $\quad A = 16\,in^2$ *(Cross Sectional Area)*

$d_1 := 4.026 \cdot in - \frac{4.562}{2} \cdot in$ $\quad d_1 = 1.745\,in$ *(Distance From Load to Section A-A)*

LOADS, STRESSES, AND MARGINS OF SAFETY:

$P_{pin_axial} := 2 \cdot P_{axial}$ $\quad P_{pin_axial} = 11820\,lbf$ *(Axial Load at Section A-A)*

$P_{pin_transverse} := 2 \cdot P_{transverse}$ $\quad P_{pin_transverse} = 31936\,lbf$ *(Transverse Load at Section A-A)*

$M := P_{pin_transverse} \cdot d_1$ $\quad M = 55728\,in \cdot lbf$ *(Bending Moment)*

$\sigma := \frac{M}{S} + \frac{P_{pin_axial}}{A}$ $\quad \sigma = 3351\,psi$ *(Normal Stress, Bending + Axial)*

$\tau := \frac{P_{pin_transverse}}{A}$ $\quad \tau = 1996\,psi$ *(Shear Stress)*

$MS_u := \frac{F_{tu}}{SF_u \cdot \sigma} - 1$ $\quad \boxed{MS_u = 11.943}$ ***... Ultimate Margin of Safety at Section A-A***

$MS_y := \frac{F_{ty}}{SF_y \cdot \sigma} - 1$ $\quad \boxed{MS_y = 14}$ ***... Yield Margin of Safety at Section A-A***

$MS_s := \frac{F_{su}}{SF_u \cdot \tau} - 1$ $\quad \boxed{MS_s = 13.157}$ ***... Shear Margin of Safety at Section A-A***

Prepared By	Name	Date		File Name
	J.Edgecombe	01/26/06		Diagonal Sill Bracket.xmcd
Checked By	C.Bala		**Engineering and Science Contract Group** *Structural Analysis Section*	Drawing No. SDG39135740
Title	Stress Analysis for Diagonal Sill Bracket			

PART: Diagonal Sill Bracket, SDG39135740

ANALYSIS: Diagonal Sill Bracket to Sill Joint Fastener Hole

FACTORS OF SAFETY:

$SF_u := 1.4$ $\quad SF_y := 1.1$ *(Ultimate and Yield Factors of Safety)*

$FF := 1.15$ *(Fitting Factor)*

MATERIAL PROPERTIES: 7050-T7451 Aluminum, 6" Thick Plate per MMPDS-01

$TD_u := 0.92$ $\quad TD_y := 0.97$ *(Temperature Degradation Factors, Ultimate and Yield @140 F)*

$F_{su} := TD_u \cdot 44 \cdot ksi$ $\quad F_{su} = 40.48\ ksi$ *(Ultimate Shear Strength)*

$F_{bru} := TD_u \cdot 103 \cdot ksi$ $\quad F_{bru} = 94.76\ ksi$ *(Ultimate Bearing Strength, e/D=1.5)*

$F_{bry} := TD_y \cdot 83 \cdot ksi$ $\quad F_{bry} = 80.51\ ksi$ *(Bearing Yield Strength, e/D=1.5)*

LOADS: Worst case shear and tensile loads are taken from the fastener analysis in Section 2.4.1.5.

file := "output_forces_diagsillbrack_r2_launch.txt"

data := READPRN(file)

Tensile loads are contained in the third column of the matrix and shear loads are contained in the fourth.

$P := \max\left(data^{\langle 3 \rangle}\right) \cdot lbf$ $\quad V := \max\left(data^{\langle 4 \rangle}\right) \cdot lbf$

$P = 12428.59\ lbf$ *(Maximum Fastener Tensile Load)* $\quad V = 2111.781\ lbf$ *(Maximum Fastener Shear Load)*

PART GEOMETRY

$t := 1.0 \cdot in$ *(Flange Thickness)*

$e := 0.5 \cdot in$ *(Min Edge Distance)*

$D := 0.539 \cdot in$ *(Hole Diameter)*

$\frac{e}{D} = 0.928$

$D_w := 0.875 \cdot in$ *(Washer OD)*

$A_{sto} := 2 \cdot t \cdot \left(e - \frac{D}{2}\right)$ $\quad A_{sto} = 0.461\ in^2$ *(Shear Tear-Out Area)*

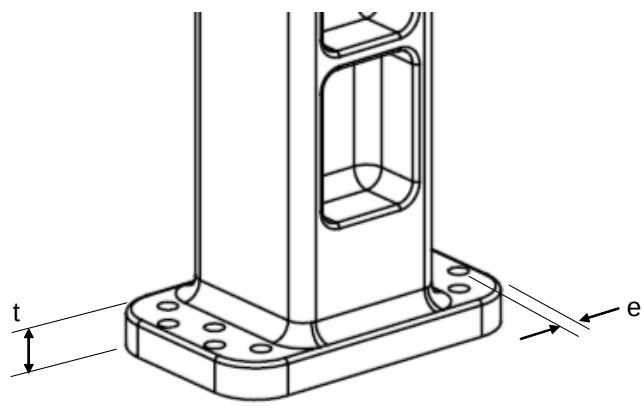

$A_{brg} := t \cdot D$ $\quad A_{brg} = 0.539\ in^2$ *(Bearing Area)*

$A_{spt} := \frac{D + D_w}{2} \cdot \pi \cdot t$ $\quad A_{spt} = 2.221\ in^2$ *(Shear Pull-Thru Area)*

Prepared By	Name	Date	Engineering and Science Contract Group	File Name
	J.Edgecombe	01/26/06		Diagonal Sill Bracket.xmcd
Checked By	C.Bala		*Structural Analysis Section*	Drawing No. SDG39135740
Title	Stress Analysis for Diagonal Sill Bracket			

STRESS ANALYSIS:

The Sill Bracket will be checked for bearing strength, shear pull-thru, and shear tear-thru.

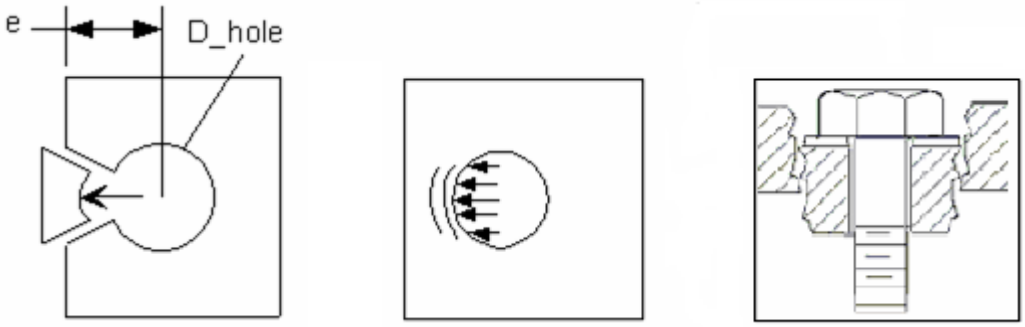

Shear Tear-Out ***Bearing*** ***Shear Pull-Thru***

$\tau_{sto} := \frac{V}{A_{sto}}$ $\tau_{sto} = 4.581\ \text{ksi}$ *(Shear Tear-Out Stress)*

$\tau_{spt} := \frac{P}{A_{spt}}$ $\tau_{spt} = 5.596\ \text{ksi}$ *(Shear Pull-Thru Stress)*

$\sigma_{brg} := \frac{V}{A_{brg}}$ $\sigma_{brg} = 3.918\ \text{ksi}$ *(Bearing Stress)*

Since the ratio of e/D is less than 1.5, adjust bearing strength allowables:

$F_{bru} := F_{bru} \cdot \left(\frac{e}{D} - .5\right)$ $F_{bru} = 40.524\ \text{ksi}$ *(Ultimate Bearing Strength, e/D=1.5)*

$F_{bry} := F_{bry} \cdot \left(\frac{e}{D} - .5\right)$ $F_{bry} = 34.43\ \text{ksi}$ *(Bearing Yield Strength, e/D=1.5)*

$MS_{sto} := \frac{F_{su}}{\tau_{sto} \cdot SF_u \cdot FF} - 1$ $\boxed{MS_{sto} = 4.489}$ ***..Margin of Safety on Shear Tear-Out***

$MS_{spt} := \frac{F_{su}}{\tau_{spt} \cdot SF_u \cdot FF} - 1$ $\boxed{MS_{spt} = 3.493}$ ***..Margin of Safety on Shear Pull-Thru***

$MS_{bru} := \frac{F_{bru}}{\sigma_{brg} \cdot SF_u \cdot FF} - 1$ $\boxed{MS_{bru} = 5.424}$ ***..Margin of Safety on Ultimate Bearing Strength***

$MS_{bry} := \frac{F_{bry}}{\sigma_{brg} \cdot SF_y \cdot FF} - 1$ $\boxed{MS_{bry} = 5.947}$ ***(Margin of Safety on Shear Tear-Out)***

2.1.13 Diagonal Strut Assy

2.1.13.1 Diagonal Strut Tube

Prepared By	Name	Date		File Name
	J.Edgecombe	01/26/06		Diagonal Strut.xmcd
Checked By	John Krejci		**Engineering and Science Contract Group** *Structural Analysis Section*	Drawing No. SDG39135742
Title	Stress Analysis for Diagonal Strut Tube			

COMPONENT: USS-02 Diagonal Strut Tube, SDG39135742

MARGIN OF SAFETY SUMMARY:

Part	Part Number	Material	Element ID	Subcase	MS	Failure Mode	Page #
Diagonal Strut Tube	SDG39135742-001	6061-T6511	1803	1032	0.58	Buckling	2.1.13.1-5

*****Refer to Appendix D1 for assessment of DR 2A0530218***

INTRODUCTION:

The Diagonal Strut Tube is one component in the Diagonal Strut Assembly (SEG39135741-301). The assembly is made up of the Diagonal Strut Tube (SDG39135742-001), two Endfittings (SDG39135743-001/-003) which are riveted to the strut tube, and two Rod End Bearings (SDG39135745-801/-803) which thread into the Endfittings. The Diagonal Strut Tube is fabricated from 4" OD x 3.5" ID 6061-T6511 aluminum round tubing. Two Diagonal Struts are incorporated in the USS-02 assembly, one each on the port and starboard sides.

LOADS:

Applied loads to the Diagonal Strut Tube have been calculated using the 2-04 loads model. The Diagonal Struts are represented by two CBEAM elements in the loads model: elements 1801 and 1803. Since the strut includes rod end bearings at each end, loads to the strut act in the axial direction only. Using NASPOST, the finite element results were sorted to determine the maximum axial load in the struts which was found to be 34052.7 lbf. NASPOST output files are located in the files "diagstrutlaunch.lis", "diagstrutlanding.lis", and "diagstrutabortlanding.lis" in the folder /hsm/bsommer/ams/naspost/uss/2-04/.

FACTORS OF SAFETY

A factor of safety of 1.4 is used on ultimate and 1.1 on yield.

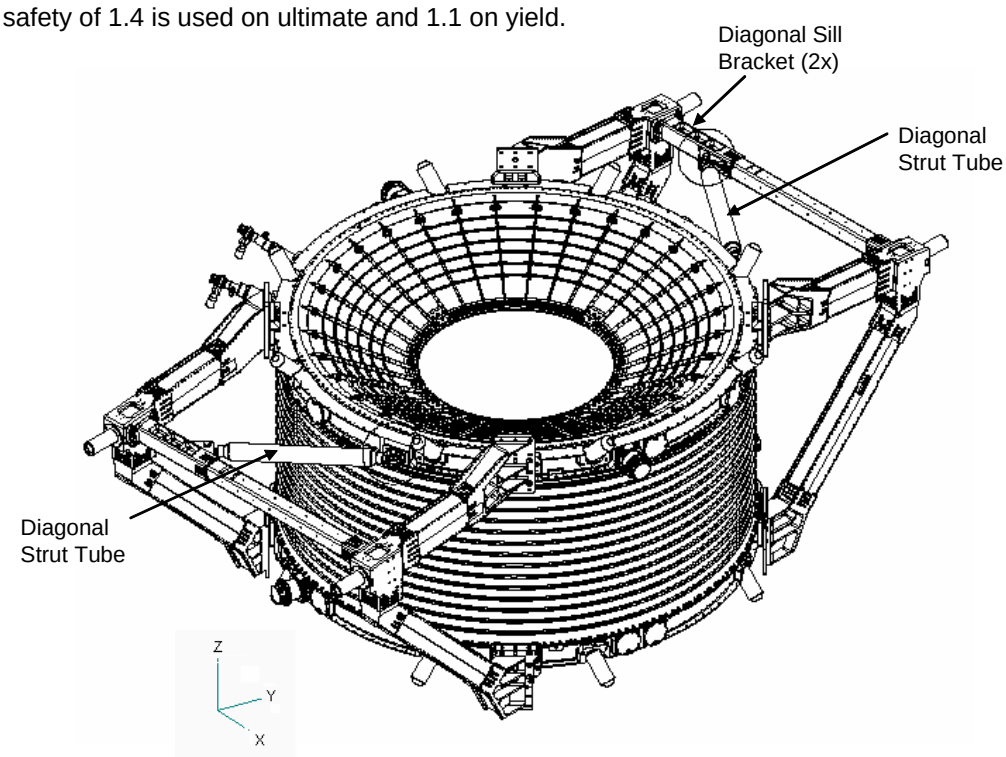

Figure 2.1.13.1-1: Upper USS-02 Assembly

Prepared By	Name	Date		File Name
	J.Edgecombe	01/26/06		Diagonal Strut.xmcd
Checked By	John Krejci		**Engineering and Science Contract Group** *Structural Analysis Section*	Drawing No. SDG39135742
Title	Stress Analysis for Diagonal Strut Tube			

PART: Diagonal Strut Tube, SDG39135742-001

ANALYSIS: Tension/Compression Analysis (Includes Buckling)

FACTORS OF SAFETY:

$SF_u := 1.4$ $\quad SF_y := 1.1$ *(Ultimate and Yield Factors of Safety)*

MATERIAL PROPERTIES: 6061-T6511 Aluminum, 0.250"-0.499 Thick Extrusion @150F per MMPDS-01

Thermal properties have been derated relative to the maximum temperature of 150F taken from Appendix C2

$E_c := 99\% \cdot 10100 \cdot ksi$ $\quad E_c = 9999\,ksi$ *(Compressive Modulus of Elasticity)*

$F_{tu} := 94\% \cdot 37 \cdot ksi$ $\quad F_{tu} = 34.78\,ksi$ *(Ultimate Tensile Strength)*

$F_{cy} := 95\% \cdot 34 \cdot ksi$ $\quad F_{cy} = 32.3\,ksi$ *(Compressive Yield Strength)*

PART GEOMETRY:

$L := 31.43 \cdot in$ *(Tube Length)*

$D_o := 3.944 \cdot in$ *(Minimum Tube OD)*

$D_i := 3.53 \cdot in$ *(Maximum Tube ID)*

$t := 0.5 \cdot (D_o - D_i)$ *(Minimum Wall Thickness)*

$A := \frac{\pi}{4} \cdot \left(D_o^2 - D_i^2\right)$

$A = 2.43\,in^2$ *(Cross Sectional Area)*

$I := \frac{\pi}{64} \cdot \left(D_o^4 - D_i^4\right)$

$I = 4.255\,in^4$ *(Moment of Inertia)*

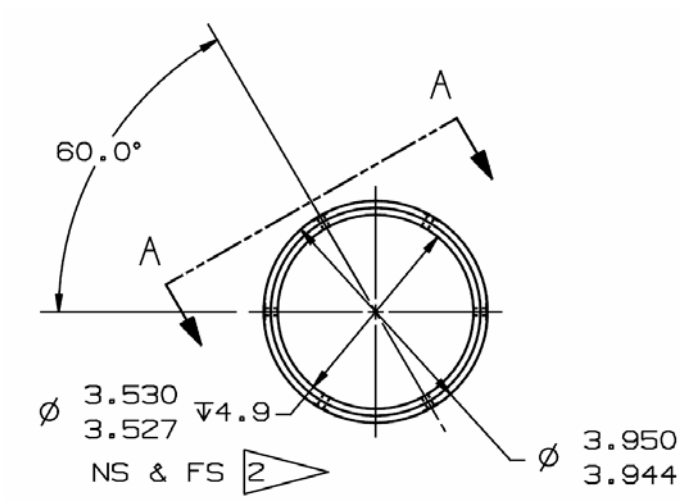

$R := \sqrt{\frac{I}{A}}$ $\quad R = 1.323\,in$ *(Radius of Gyration)*

$K := 1.0$ *(Effective Length Factor for Column, assuming a pin ended beam. Ref Structural Engineering Handbook, 4th Edition, Figure 5, pg. 8-10)*

$SR := \frac{K \cdot L}{R}$ $\quad SR = 23.752$ *(Slenderness Ratio)*

CALCULATE ALLOWABLE LOADS:

The following constants are calculated per the *Structural Engineering Handbook, 4th Edition*, Formulas 5a-c, pg. 11-6 in order to calculate the allowable compressive stresses for the beam.

$$B_c := F_{cy}\cdot\left(1 + \sqrt{\frac{F_{cy}}{2250\cdot ksi}}\right) \qquad B_c = 36.17\ ksi$$

$$D_c := \frac{B_c}{10}\cdot\sqrt{\frac{B_c}{E_c}} \qquad D_c = 0.218\ ksi$$

$$C_c := 0.41\cdot\frac{2\cdot B_c}{3\cdot D_c} \qquad C_c = 45.446$$

The allowable compressive loads are calculated using the above constants to approximate the tangent-modulus column formula if the slenderness ratio is less than the constant C_c. Otherwise, the allowable is calculated using the Euler column formula.

$$F_c := \begin{cases} B_c - D_c\cdot SR & \text{if } SR \le C_c \\ E_c\cdot\left(\frac{\pi}{SR}\right)^2 & \text{otherwise} \end{cases} \qquad F_c = 31.003\ ksi$$

(Allowable Compressive Stress Based on Slenderness Ratio)

$$P_{cr} := F_c\cdot A \qquad P_{cr} = 75343.54\ lbf$$

(Allowable Compressive Axial Load)

$$P_t := F_{tu}\cdot A \qquad P_t = 84522.61\ lbf$$

(Allowable Tensile Load)

LOADS:

NASPOST was used to output worst case element loads for the Diagonal Strut Tube during launch, landing and abort landing. Three files were generated: "diagstrutlaunch.lis", "diagstrutlanding.lis", and "diagstrutabortlanding.lis" and are located in the folder /hsm/bsommer/ams/naspost/uss/2-04/. Analysis will be performed using the maximum axial load found in any load case.

$$P_{max_launch} := |34052.77|\cdot lbf$$

(Worst Case Axial Load in Strut, Launch Cases, Element ID 1803, Subcase 1032)

$$P_{max_landing} := |-22696.79|\cdot lbf$$

(Worst Case Axial Load in Strut, Landing Cases, Element ID 1803, Subcase 4045)

$$P_{max_abort} := |-14987.22|\cdot lbf$$

(Worst Case Axial Load in Strut, Abort Landing Cases, Element ID 1803, Subcase 2045)

$$P_a := \max(P_{max_launch}, P_{max_landing}, P_{max_abort}) \qquad P_a = 34052.77\ lbf$$

(Maximum Axial Load)

MARGINS OF SAFETY:

The part will be checked assuming the maximum axial load acts in both the tensile and compressive directions in order to determine the minimum margin of safety

$$MS_{tens} := \frac{P_t}{P_a \cdot SF_u} - 1 \qquad MS_{tens} = 0.773$$

$$MS_{comp} := \frac{P_{cr}}{P_a \cdot SF_u} - 1 \qquad MS_{comp} = 0.58$$

$$MS := \min(MS_{tens}, MS_{comp}) \qquad \boxed{MS = 0.58}$$

...Margin of Safety

2.1.13.2 Diagonal Strut Endfitting

Prepared By	Name	Date		File Name
	J.Edgecombe	02/10/06	**Engineering and Science Contract Group**	Diagonal Strut Endfitting.xmcd
Checked By	C. Bala		*Structural Analysis Section*	Drawing No. SDG39135743
Title	Stress Analysis for Diagonal Strut Endfitting			

COMPONENT: USS-02 Diagonal Strut Endfitting, SDG39135743-001,-003

MARGIN OF SAFETY SUMMARY:

Part	Part Number	Material	MS	Failure Mode	Page #
Diagonal Strut Endfitting	SDG39135743-001,-003	7075-T7351	0.58	Thread Shear	2.1.13.2-5

INTRODUCTION:

The Diagonal Strut Endfitting is one component in the Diagonal Strut Assembly (SEG39135741-301). The assembly is made up of the Diagonal Strut Tube (SDG39135742-001), two Endfittings (SDG39135743-001/-003) which are riveted to the strut tube, and two Rod End Bearings (SDG39135745-801/-803) which thread into the Endfittings. The Diagonal Strut Tube is fabricated from 4" OD x 3.5" ID 6061-T6511 aluminum round tubing. Two Diagonal Struts are incorporated in the USS-02 assembly, one each on the port and starboard sides. This analysis will address the thread shear at the interface with the Rod End Bearings. Analysis of the rivet holes and tension across the net section is addressed in the rivet analysis in Section 2.5.1.5.

LOADS:

Applied loads to the Diagonal Strut Endfitting have been calculated using the 2-04 loads model. The Diagonal Struts are represented by two CBEAM elements in the loads model: elements 1801 and 1803. Since the strut includes rod end bearings at each end, loads to the strut act in the axial direction only. Using NASPOST, the finite element results were sorted to determine the maximum axial load in the struts which was found to be 34052.7 lbf. NASPOST output files are located in the files "diagstrutlaunch.lis", "diagstrutlanding.lis", and "diagstrutabortlanding.lis" in the folder /hsm/bsommer/ams/naspost/uss/2-04/.

TEMPERATURE:

Temperatures of the diagonal strut are taken from Appendix C, Table C2-2 for Launch (120F), Landing (101F), and Abort Landing (150F). Margins of safety for each flight event are calculated using appropriate material thermal degradation.

FACTORS OF SAFETY

A factor of safety of 1.4 is used on ultimate and 1.1 on yield.

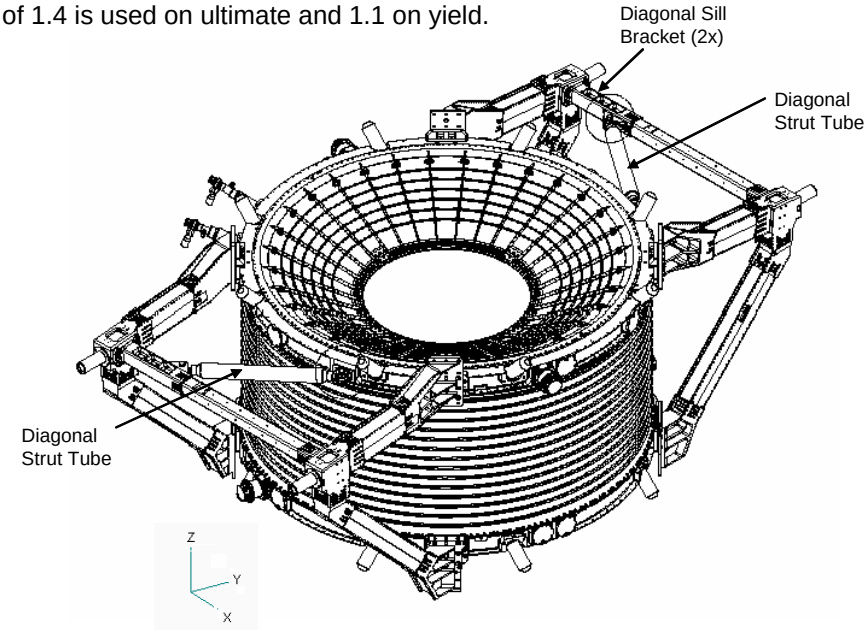

Figure 2.1.13.2-1: Upper USS-02 Assembly

Prepared By	Name	Date	Engineering and Science Contract Group	File Name
	J.Edgecombe	02/10/06		Diagonal Strut Endfitting.xmcd
Checked By	C. Bala		*Structural Analysis Section*	Drawing No. SDG39135743
Title	Stress Analysis for Diagonal Strut Endfitting			

PART: Diagonal Strut Endfitting, SDG39135743-001,-003

ANALYSIS: Thread Shear

FACTORS OF SAFETY:

$SF_u := 1.4$ $SF_y := 1.1$ *(Ultimate and Yield Factors of Safety)*

MATERIAL PROPERTIES: 7075-T73511 Aluminum Bar, per MMPDS-01, Table 3.7.6.0(g)

Thermal degradation factors for launch, landing and abort landing are applied to the margin of safety calculations

$TD_{launch} := 96.5\%$ *(Temperature Degradation @120F - Launch)*

$TD_{landing} := 98\%$ *(Temperature Degradation @101F - Landing)*

$TD_{abort} := 94\%$ *(Temperature Degradation @150F - Abort Landing)*

$F_{tu} := 58 \cdot ksi$ $F_{tu} = 58\,ksi$ *(Ultimate Tensile Strength)*

$F_{su} := 37 \cdot ksi$ $F_{su} = 37\,ksi$ *(Ultimate Shear Strength)*

PART GEOMETRY:

$d_p := 1.1959 \cdot in$ *(Pitch Diameter of 1.25-12UNJF Thread)*

$l_{t_max} := 2.5 \cdot in$ *(Thread Depth in Endfitting)*

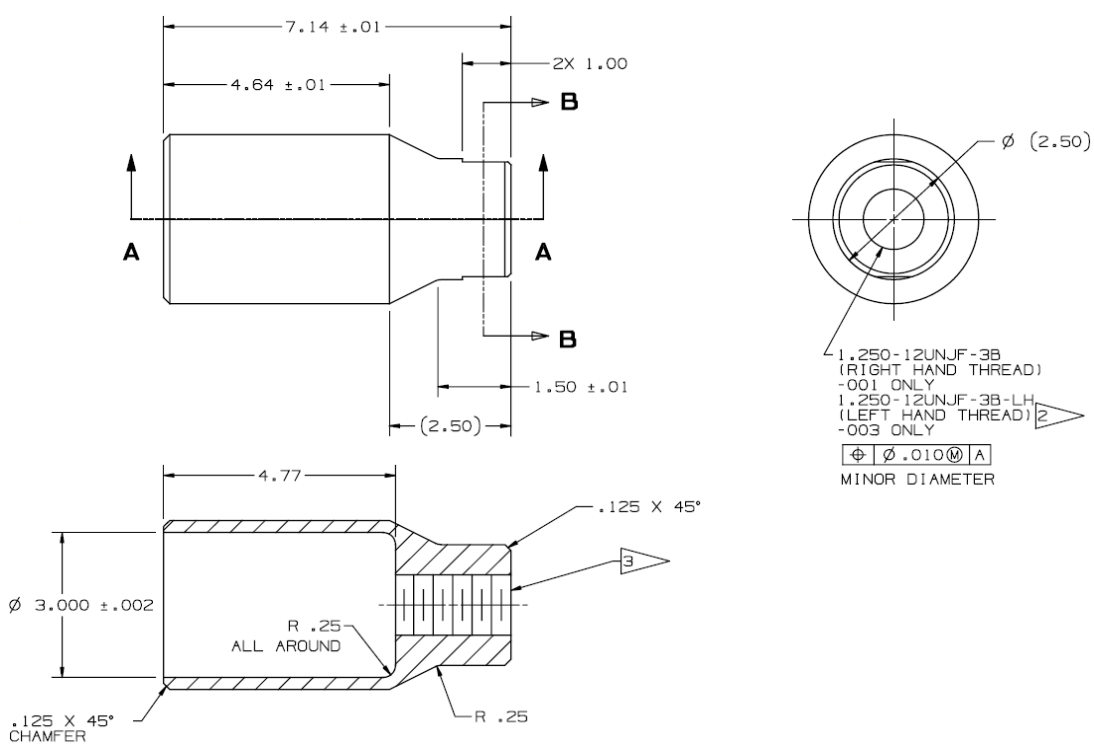

Figure 2.1.13.2-2: Diagonal Strut Endfitting

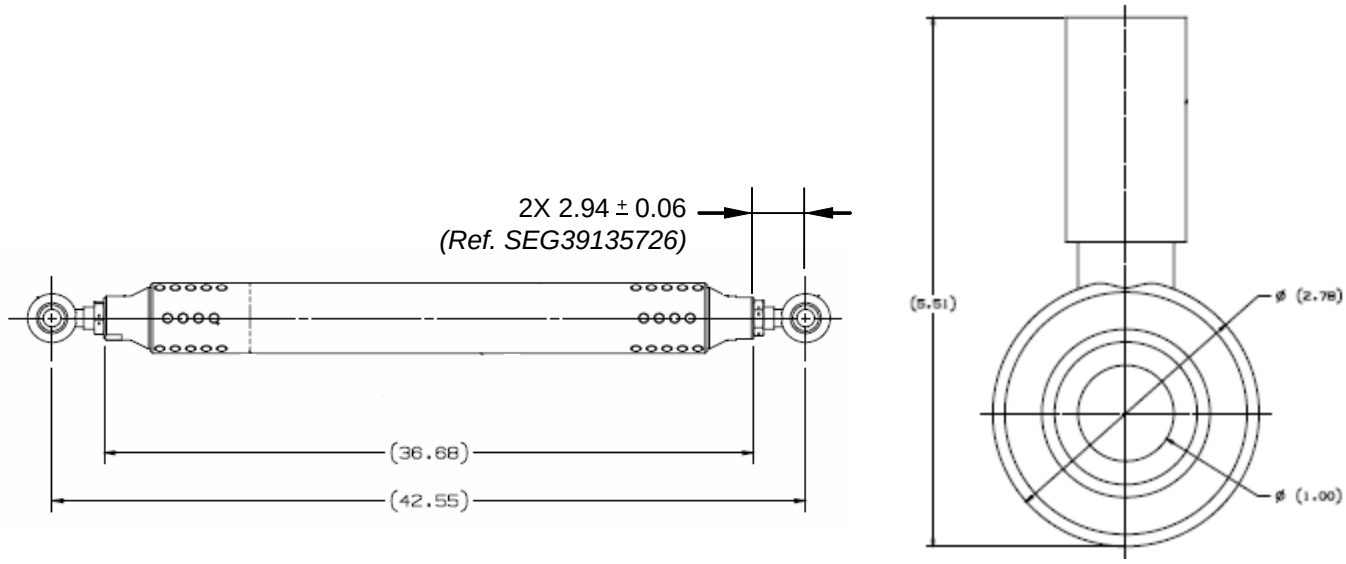

Figure 2.1.13.2-3: Diagonal Strut Assembly, SEG39135741 / Rod End Bearing, SDG39135745

Calculate Thread Engagement of Rod End Bearing

$l_r := 5.51 \cdot in$ *(Length of Rod End Bearing)*

$d_r := 2.78 \cdot in$ *(Outer Diameter of Rod End Race)*

$l_i := 2.94 \cdot in$ *(Length from Center of Rod End to Endfitting)*

$tol := 0.06 \cdot in$ *(Tolerance on Thread Engagement)*

$L_{thread} := \left(l_r - \frac{d_r}{2}\right) - l_i - tol$ $\quad L_{thread} = 1.12\,in$ *(Minimum Thread Engagement Length)*

$A_{thd} := \frac{\pi \cdot L_{thread} \cdot d_p}{2}$ $\quad A_{thd} = 2.104\,in^2$ *(Thread Shear Area)*

LOADS:

NASPOST was used to output worst case element loads for the Diagonal Strut Tube during launch, landing and abort landing. Three files were generated: "diagstrutlaunch.lis", "diagstrutlanding.lis", and "diagstrutabortlanding.lis" and are located in the folder /hsm/bsommer/ams/naspost/uss/2-04/. Analysis will be performed using the maximum axial load found in any load case.

$P_{max_launch} := |34052.77| \cdot lbf$ *(Worst Case Axial Load in Strut, Launch Cases, Element ID 1803, Subcase 1032)*

$P_{max_landing} := |-22696.79| \cdot lbf$ *(Worst Case Axial Load in Strut, Landing Cases, Element ID 1803, Subcase 4045)*

$P_{max_abort} := |-14987.22| \cdot lbf$ *(Worst Case Axial Load in Strut, Abort Landing Cases, Element ID 1803, Subcase 2045)*

STRESS AND MARGIN OF SAFETY:

$\tau_{launch} := \frac{P_{max_launch}}{A_{thd}}$ $\tau_{launch} = 16185.26\ psi$ *(Thread Shear Stress, Launch)*

$\tau_{landing} := \frac{P_{max_landing}}{A_{thd}}$ $\tau_{landing} = 10787.77\ psi$ *(Thread Shear Stress, Landing)*

$\tau_{abort} := \frac{P_{max_abort}}{A_{thd}}$ $\tau_{abort} = 7123.416\ psi$ *(Thread Shear Stress, Abort Landing)*

$MS_{launch} := \frac{F_{su} \cdot TD_{launch}}{\tau_{launch} \cdot SF_u} - 1$ $\boxed{MS_{launch} = 0.58}$ ***...Margin of Safety on Thread Shear, Launch***

$MS_{landing} := \frac{F_{su} \cdot TD_{landing}}{\tau_{landing} \cdot SF_u} - 1$ $MS_{landing} = 1.4$ ***...Margin of Safety on Thread Shear, Landing***

$MS_{abort} := \frac{F_{su} \cdot TD_{abort}}{\tau_{abort} \cdot SF_u} - 1$ $MS_{abort} = 2.49$ ***...Margin of Safety on Thread Shear, Abort Landing***

$MS := \min(MS_{launch}, MS_{landing}, MS_{abort})$

$\boxed{MS = 0.58}$ ***...Minimum Margin of Safety***

2.1.13.3 Rod-end Bearing

Prepared By	Name	Date		File Name
	Brent Dyer	07/12/05		rodend_bearing.mcd
Checked By	John Krejci		**Engineering and Science Contract Group** *Structural Analysis Section*	Drawing No. SDG39135745
Title	Diagonal Strut Rod-End Bearing			

Analysis of diagonal strut rod-end bearing:

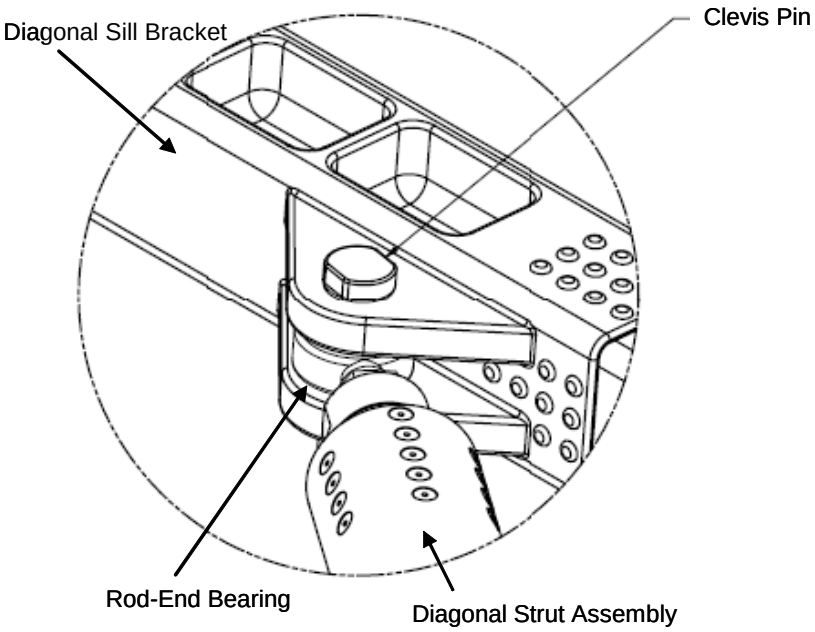

Diagonal Strut Assembly (View shown on diagonal sill bracket side) - SEG39135741

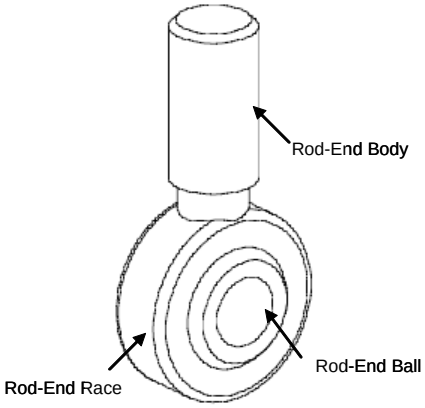

Rod End Bearing - SDG39135745

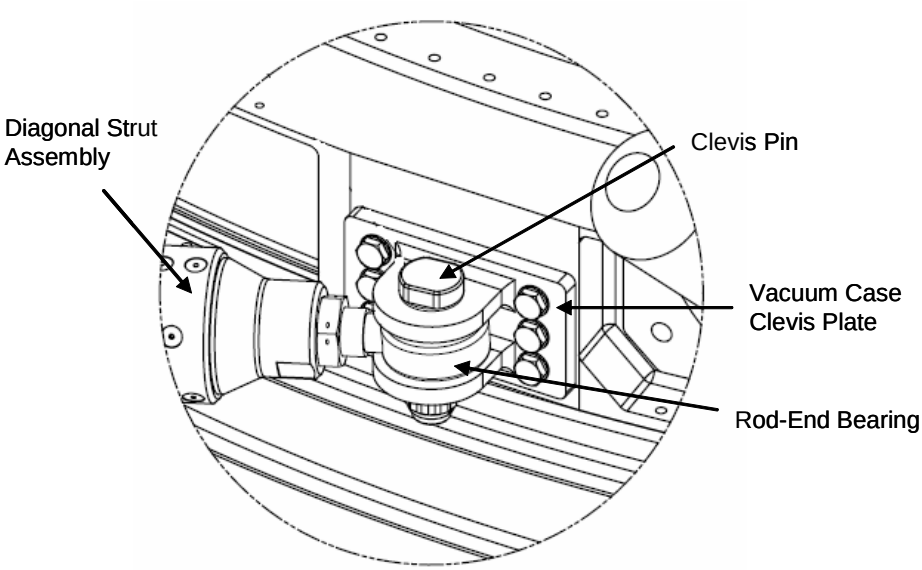

Diagonal Strut Assembly (View shown on vacuum case side) - SEG39135741

Prepared By	Name	Date		File Name
	Brent Dyer	07/12/05		rodend_bearing.mcd
Checked By	John Krejci		**Engineering and Science Contract Group** *Structural Analysis Section*	Drawing No. SDG39135745
Title	Diagonal Strut Rod-End Bearing			

Description of Rod End Bearing:

Thread Size: 1.2500-12UNJF-3A Threads per Inch $N := 12 \cdot \frac{1}{in}$

Rod-End Bearing Part No. SWRKMLH-16-516 (Left Hand Thread),
SWRKM-16-516 (Right Hand Thread) (Ref. Southwest Products Co. Spec)

Altered Item Part No. SDG39135745-801 (Right Hand Thread)
SDG39135745-803 (Left Hand Thread)

$d_t := 1.1959 \cdot in$ pitch diameter of threads

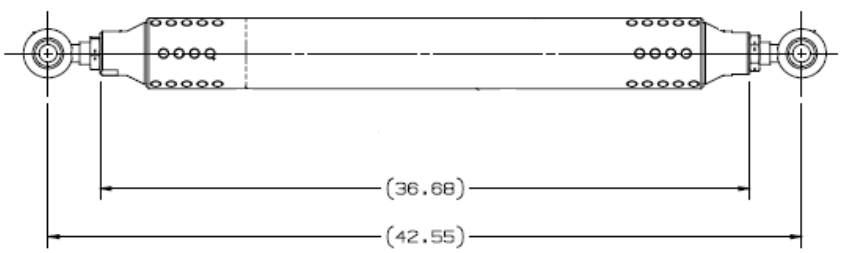

Diagonal Strut Assembly SEG39135741

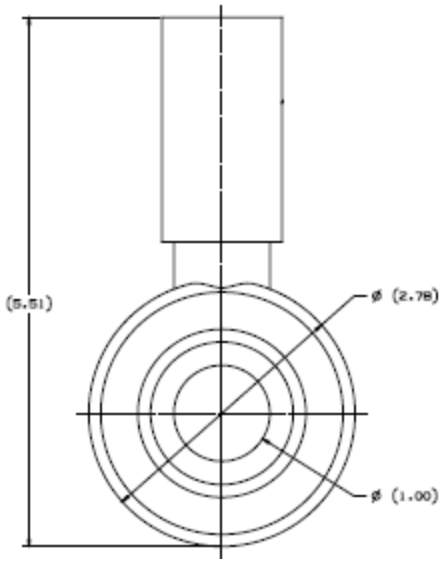

Rod-End Bearing SDG39135745

Note: Referenced dimension of 42.55" in drawing SEG39135741 equals a thread engagement of 1.185". Analysis will allow for .50" of linear adjustment in addition to the length of 42.55" See below. (See section 2.1.13.2 for the endfitting analysis.)

Referenced thread engagement length:

length of rod end $lr := 5.51 \cdot in$

Outer diameter of rod-end race $dr := 2.78 \cdot in$

length from endfitting to endfitting $le := 36.68 \cdot in$

length between the center of rod-end to rod-end $lrc := 42.55 \cdot in$

Referenced thread engagement length $Lr := \left(lr - \frac{dr}{2}\right) - \frac{lrc - le}{2}$ $Lr = 1.185\ in$

Adjusted thread engagement length:

Additional linear adjustment $la := .50 \cdot in$

Number of turns $\frac{la}{\frac{1}{N}} = 6$

$L := Lr - la$ $L = 0.685\ in$ length of thread engagement inside of endfitting

$A_s := \pi\, d_t \cdot \frac{L}{2}$ $A_s = 1.287\ in^2$ Area of thread shear

Material Properties:

Rod-End Body - CRES 15-5PH Stainless Steel, 1025 cond. (Ref. Mil-HDBK-5J, table 2.6.7.0 (b))

$F_{tu} := 155000 \cdot psi$ $F_{su} := 97000 \cdot psi$

Rod-End Ball - 13-8Mo (AMS5629) (Ref. Mil-HDBK-5J, table 2.6.6.0 (b))

$P_{ult} := 80300 lbf$ (Ultimate Static Load Allowable from MIL-B-81935/1B or SAE-AS81935/1)

Factors of Safety:

$FSu := 1.4$ Ultimate Factor of Safety $FSy := 1.1$ Yield Factor of Safety

$FF := 1.15$ Fitting Factor of Safety

Temperature Input:

Maximum Temperature $temp_max := 150 \cdot deg$ (Abort Landing Temperature, Ref. Appendix C2)

Temperature Correction Factor $c := .96$ (For CRES 15-5PH and 13-8Mo)

Load Input:

$R_{maxaxial} := 34052.77 \cdot lbf$ (max axial load from load case 1032 of USS-02, loads model 2-04, element ID 1803, Ref. Appendix 12).

Rod-End Body Margin of Safety:

Margin of Safety $MS_{ult} := \frac{P_{ult} \cdot c}{FF \cdot FSu \cdot R_{maxaxial}} - 1$ $MS_{ult} = 0.406$

Rod-End Ball Margin of Safety:

Margin of Safety $MS_{bru} := \frac{P_{ult} \cdot c}{FF \cdot FSu \cdot R_{maxaxial}} - 1$ $MS_{bru} = 0.406$

Rod-End Threads Margin of Safety:

Shear Stress of pulled-out threads $\tau := \frac{R_{maxaxial}}{A_s}$ $\tau = 26463.491\ psi$

Margin of Safety $MS := \frac{F_{su} \cdot c}{FF \cdot FSu \cdot \tau} - 1$ $MS = 1.186$

2.1.14 Clevis Pin

Clevis Pin, SDG39135744

The Clevis Pin analysis is performed in the following report sections. The analysis covers the Clevis Pin for the Diagonal Sill Bracket on the Upper USS-02 Assembly and the Clevis Pin for the Clevis Plate on the Upper USS-02 Assembly.

2.1.14.1	Clevis Pin (Sill Tube Side)
2.1.14.2	Clevis Pin (Vacuum Case Side)

2.1.14.1 Clevis Pin (Sill Tube Side)

Prepared By	Name	Date		File Name
	Brent Dyer	07/12/05		diagsill_clevispin.mcd
Checked By	John Krejci		**Engineering and Science Contract Group** *Structural Analysis Section*	Drawing No. SDG39135744
Title	Clevis Pin for Diagonal Sill Bracket			

Check USS clevis pin stresses:

This analysis covers the clevis pin for the diagonal sill bracket on the upper USS-02 assembly. Reference drawing SDG39135744 for pin details.

Reference section 2.1.12 Diagonal Sill Bracket for the lug analysis.

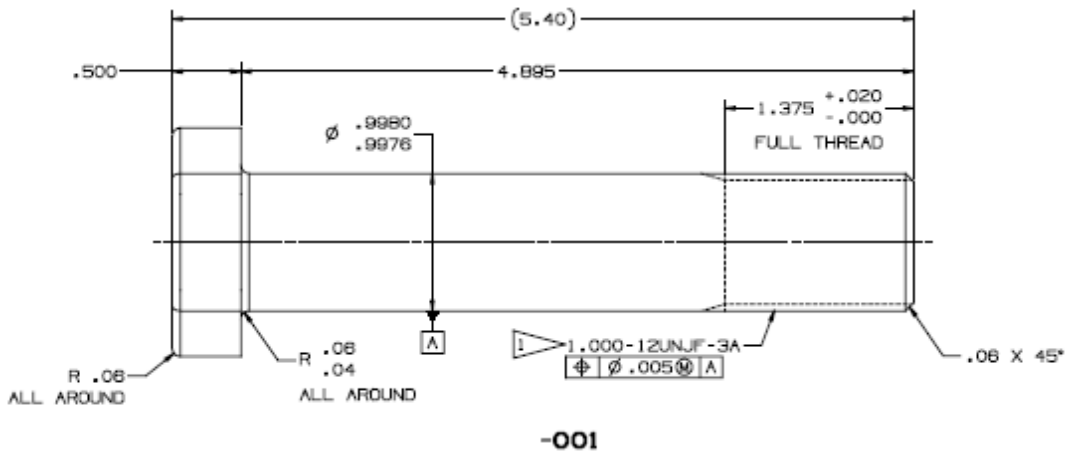

Temperature Input:

Maximum Temperature: $Temp_max := 150 \cdot deg$ (Abort Landing Temperature, Ref. Appendix C2)

Material Properties of Pin: Custom 455 H1000, AMS5617 (Ref. MIL-HDBK-5J, table 2.6.4.0 (b) and figure 2.6.4.2.1)

Temperature Correction Factor: $cp := .97$

Tensile allowable, ultimate: $Ftu_pin := 200000 \cdot cp \cdot psi$

$Ftu_pin = 194000psi$

Shear allowable $Fsu_pin := 124000 cp \cdot psi$

$Fsu_pin = 120280psi$

Tensile allowable, yield: $Fty_pin := 185000 \cdot cp \cdot psi$

$Fty_pin = 179450psi$

Material Properties of Lug: 7050-T7451, BMS 7 323-C, 5.75 in thick (Ref. MIL-HDBK-5J, table 3.7.4.0 (b1) and figure 3.7.4.2.1)

Temperature Correction Factor: $cl := .92$

Tensile allowable, ultimate $Ftu_lug := 66000 cl \cdot psi$ $Ftu_lug = 60720psi$

Shear allowable $Fsu_lug := 43000 cl \cdot psi$ $Fsu_lug = 39560psi$

Factor of Safety:

Ultimate Factor of Safety: $FSu := 1.4$ (Since the stress check is on combined bending and shear, there is no yield check.)

Prepared By	Name	Date	Engineering and Science Contract Group	File Name
	Brent Dyer	07/12/05		diagsill_clevispin.mcd
Checked By	John Krejci		*Structural Analysis Section*	Drawing No. SDG39135744
Title	Clevis Pin for Diagonal Sill Bracket			

Load Inputs:

Applied force: $P := 34052.77 \cdot lbf$ **This load is the max axial load from AMS 2-04 model, load case 1032 Ref Appendix A12.**

Geometry:

Distance from centerline to outside of lug: $e := (5.56 - 4.026) \cdot in$ $\quad e = 1.534\ in$

Diameter of pin $Dp := .9976 \cdot in$ Thickness of one lug: $t := 1.0 \cdot in$ Diameter of lug hole: $D := 1.005 \cdot in$

Outer Radius of lug: $W := 3.5 \cdot in$

Bearing area (Lug hole): $Abr := D \cdot t$ $\quad Abr = 1.005\ in^2$

Tensile area (Lug): $At := (W - D) \cdot t$ $\quad At = 2.495\ in^2$

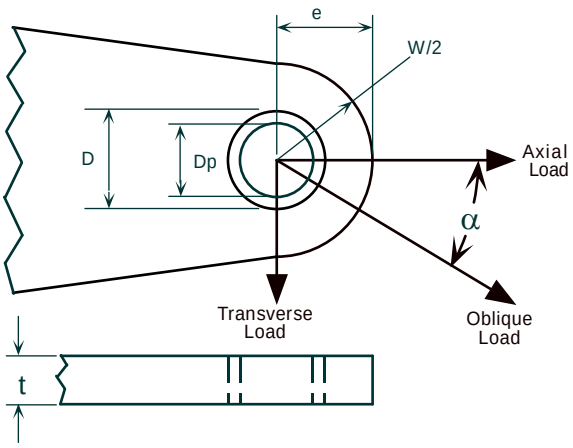

Typical Lug Dimensions and Loading

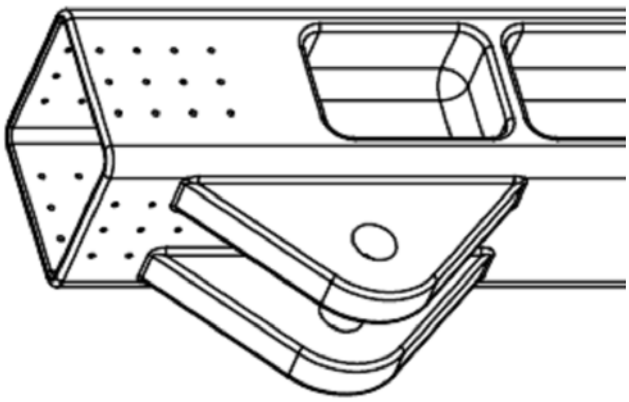

Diagonal Sill Bracket Lug - SDG39135740

Check Pin Bending Stress:

Thickness of rod-end ball: $t2 := 1.375 \cdot in$

(For t2 reference SAE-AS81935, Table 1)

Depth of two lugs: $dlug := 3.46 \cdot in$

Gap is: $$g := \frac{dlug - 2 \cdot t - t2}{2}$$

$$g = 0.0425\ in$$

Calculate ratios:

$$\frac{e}{D} = 1.526 \qquad \frac{D}{t} = 1.005 \qquad \frac{W}{D} = 3.483$$

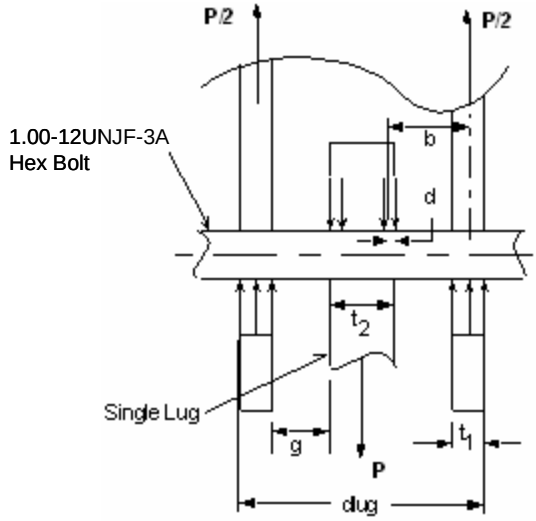

View B-B

Ultimate Allowable Loads:

From AERONAUTICS STRUCTURES MANUAL, FIG B.2.1.0-3 $Kbr := 1.49$

Ultimate load for shear bearing is therefore: $Pbru := Kbr \cdot Ftu_lug \cdot Abr$ $Pbru = 90925\ lbf$

From AERONAUTICS STRUCTURES MANUAL, FIG B.2.1.0-4, CURVE 4 $Kt := 0.77$

Ultimate load for tension is therefore: $Ptu := Kt \cdot Ftu_lug \cdot At$ $Ptu = 116652\ lbf$

From AERONAUTICS STRUCTURES MANUAL, B2.1.0-6

$$r := \left[\left(\frac{e}{D}\right) - \frac{1}{2}\right] \cdot \frac{D}{t2} \qquad r = 0.75$$

$$Pumin := \begin{cases} Ptu & \text{if } Ptu \le Pbru \\ Pbru & \text{otherwise} \end{cases} \qquad Pumin = 90925\ lbf \qquad \frac{Pumin}{Abr \cdot Ftu_lug} = 1.49$$

From AERONAUTICS STRUCTURES MANUAL, Figure B 2.1.0-6 $\gamma := .74$

Calculate the moment arm "b" $b := \frac{t}{2} + g + \gamma \cdot \left(\frac{t2}{4}\right)$ $b = 0.797\ in$

Maximum pin bending moment is: $Mmax := P \cdot \frac{b}{2}$ $Mmax = 13568\ in \cdot lbf$

Maximum Shear on the pin is: $P = 34052.77\ lbf$

Section Properties:

Cross section of the pin (bolt) is a circle.

Diameter: $d := Dp$ $d = 0.9976\ in$

Area is: $Area := \left(\frac{\pi}{4}\right) \cdot \left(d^2\right)$

$Area = 0.782\ in^2$

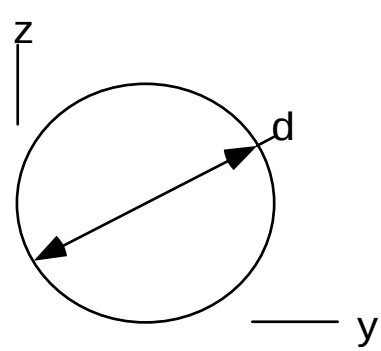

Distance from centroid to outer fiber: $zc := \frac{d}{2}$ $\quad zc = 0.499\ in$

$cz := zc$ $\quad cz = 0.499\ in$

Moments of inertia about centroid: $Iy := \left(\frac{\pi}{64}\right)\cdot\left(d^4\right)$ $\quad Iy = 0.049\ in^4$

Stresses on cross section:

Bending stress is: $\sigma := \frac{|Mmax|\cdot cz}{Iy}$ $\quad \sigma = 139201\ psi$

Shear stress is: $\tau := \frac{P}{Area}$ $\quad \tau = 43566\ psi$

Find Modulus of Rupture of pin to check bending (Ref.Bruhn, C4.16, figure C4.11)

Assume D/t=2 for solid pin.

$Frup := 330000\cdot cp\cdot psi$ $\quad Frup = 320100\ psi$

Margins of safety:

Stress ratios

Bending $Rb := \frac{\sigma\cdot FSu}{Frup}$ $\quad Rb = 0.609$

Shear $Rs := \frac{\tau\cdot FSu}{Fsu_pin}$ $\quad Rs = 0.507$

Margins of safety: $MSu := \frac{1}{\sqrt{Rb^2 + Rs^2}} - 1$ $\quad MSu = 0.262$

2.1.14.2 Clevis Pin (Vacuum Case Side)

Prepared By	Name	Date		File Name
	K San	08/12/05		vc_clevispin.mcd
Checked By	John Krejci		**Engineering and Science Contract Group** *Structural Analysis Section*	Drawing No. SDG39135744
Title	Clevis Pin for Vacuum Case Side			

Check VC clevis pin stresses:

This analysis covers the clevis pin for the Clevis Plate on the upper USS-02 assembly. Reference drawing SDG39135744-003 for pin details.

Reference section 3.8 Clevis Plate for the lug analysis.

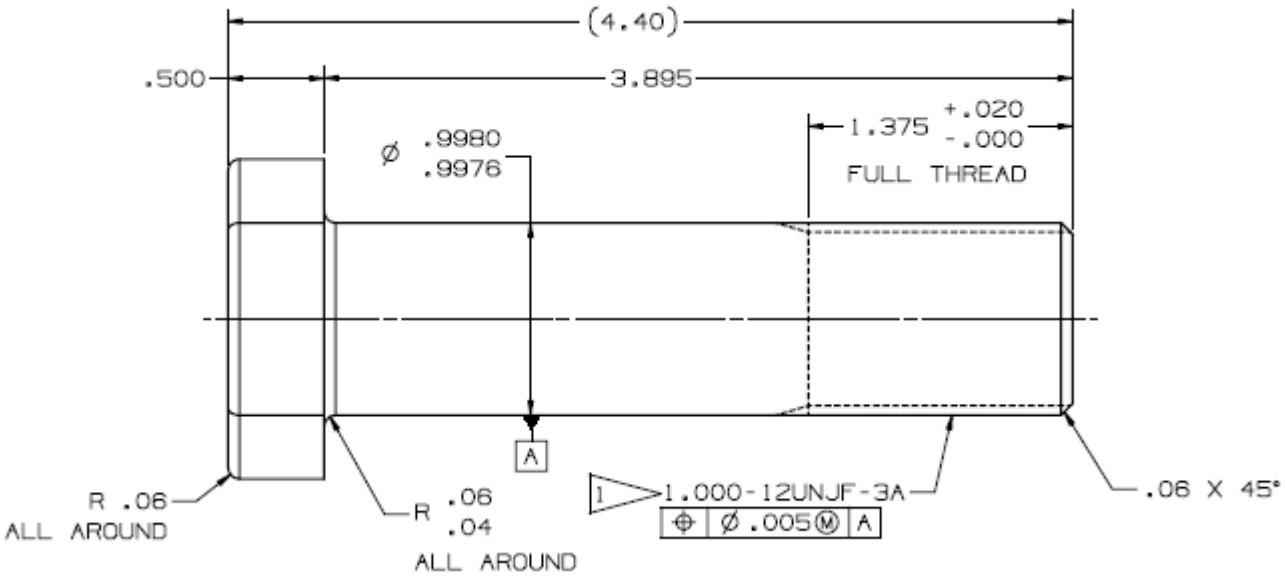

Temperature Input:

Maximum Temperature: $Temp_max := 150 \cdot deg$ (Abort Landing Temperature, Ref. Appendix C2)

Material Properties of Pin: Custom 455 H1000, AMS5617 (Ref. MIL-HDBK-5J, table 2.6.4.0 (b) and figure 2.6.4.1.1)

Temperature Correction Factor: $cp := .97$

Tensile allowable, ultimate: $Ftu_pin := 200000 \cdot cp \cdot psi$ $Ftu_pin = 1.94 \times 10^5 psi$

Shear allowable $Fsu_pin := 124000 \cdot cp \cdot psi$ $Fsu_pin = 1.203 \times 10^5 psi$

Tensile allowable, yield: $Fty_pin := 185000 \cdot cp \cdot psi$ $Fty_pin = 1.795 \times 10^5 psi$

Prepared By	Name	Date		File Name
	K San	08/12/05		vc_clevispin.mcd
Checked By	John Krejci		**Engineering and Science Contract Group** *Structural Analysis Section*	Drawing No. SDG39135744
Title	Clevis Pin for Vacuum Case Side			

Factor of Safety:

Ultimate Factor of Safety: $FSu := 1.4$ (Since the stress check is on combined bending and shear, there is no yield check.)

Load Inputs:

Angle of applied force: $\alpha := 54.0 \cdot deg$ (Ref. CAD Model)

Applied force: $P := 34052.77 \cdot lbf$ **This load is the max axial load from AMS 2-04 model, load case 1032.**

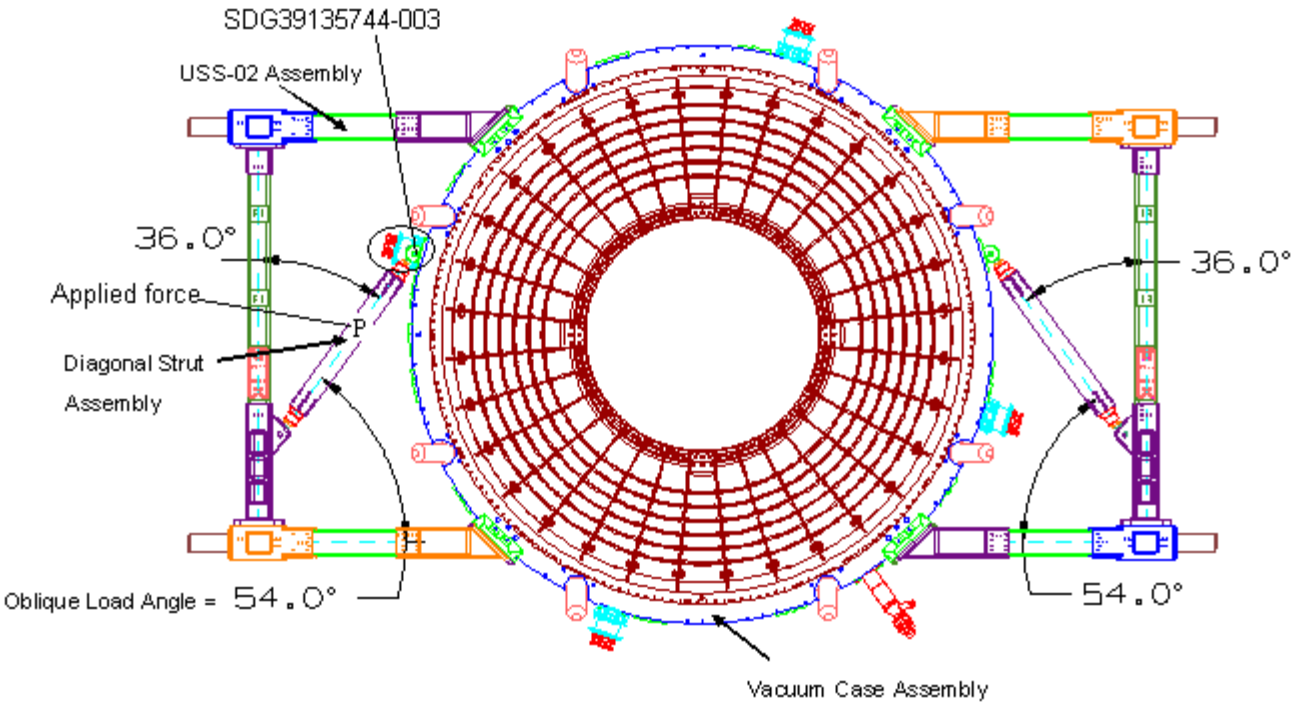

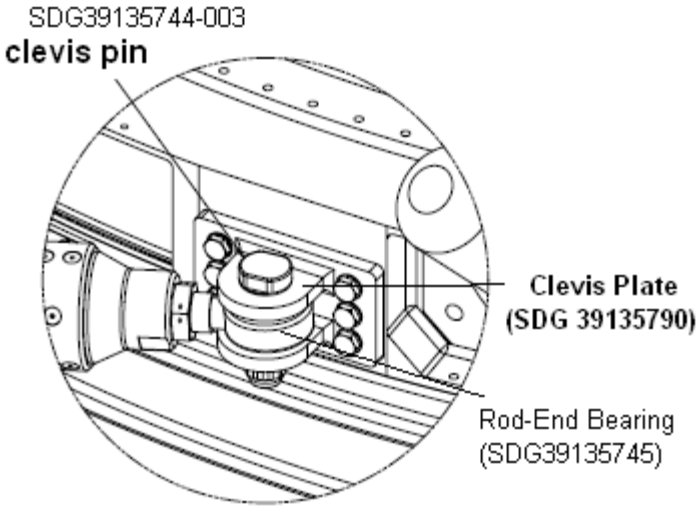

Prepared By	Name	Date	Engineering and Science Contract Group	File Name
	K San	08/12/05		vc_clevispin.mcd
Checked By	John Krejci		*Structural Analysis Section*	Drawing No. SDG39135744
Title	Clevis Pin for Vacuum Case Side			

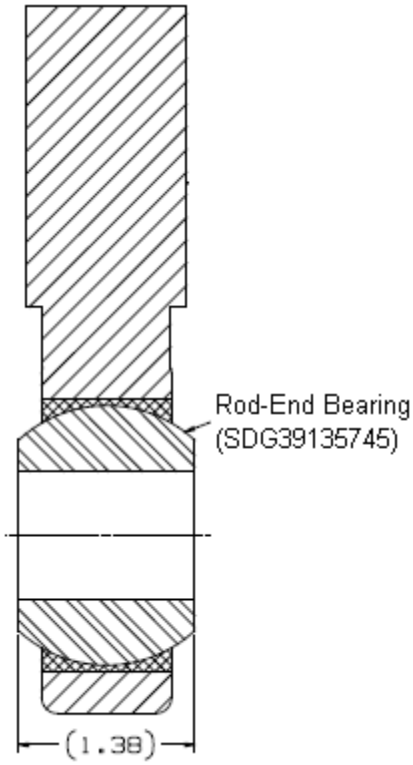

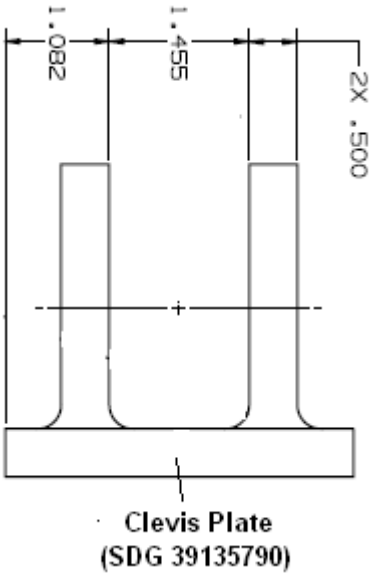

Check Pin Bending Stress:

Pin Diameter: $D := .9976 \cdot in$

Thickness of clevis plate $t1 := 0.5 \cdot in$

Thickness of Rod-End Bearing: (SDG39135745) $t2 := 1.38 \cdot in$

Depth of lug is: $dlug := 2.455 \cdot in$

Gap is: $g := \frac{dlug - 2 \cdot t1 - t2}{2}$

$g = 0.0375\,in$

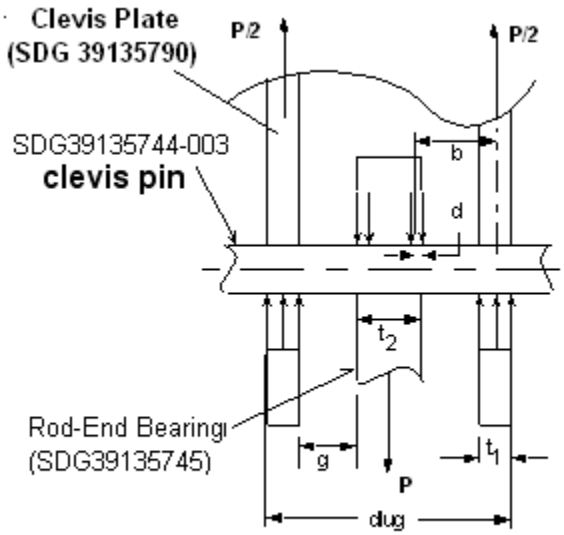

From AERONAUTICS STRUCTURES MANUAL, Figure B 2.1.0-6 $\gamma := 1.0$ (conservative)

Calculate the moment arm "b" $b := \frac{t1}{2} + g + \gamma \cdot \left(\frac{t2}{4}\right)$ $b = 0.633\ \text{in}$

Applied force: $P = 3.405 \times 10^4\ \text{lbf}$

Maximum pin bending moment is: $Mmax := P \cdot \frac{b}{2}$ $Mmax = 10769\ \text{in} \cdot \text{lbf}$

Shear on the pin is: $Fz := \frac{P}{2}$ $Fz = 17026\ \text{lbf}$

Section Properties:

Cross section of the pin (bolt) is a circle.

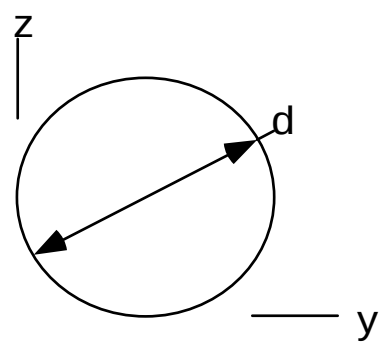

Diameter: $d := D$

Area: $A := \left(\frac{\pi}{4}\right) \cdot \left(d^2\right)$

$A = 0.782\ \text{in}^2$

Distance to centroid is: $yc := \frac{d}{2}$ $yc = 0.499\ \text{in}$

$zc := \frac{d}{2}$ $zc = 0.499\ \text{in}$

Distance from centroid to outer fiber: $cy := yc$ $cy = 0.499\ \text{in}$

$cz := zc$ $cz = 0.499\ \text{in}$

Moments of inertia about centroid: $Iy := \left(\frac{\pi}{64}\right) \cdot \left(d^4\right)$ $Iy = 0.049\ \text{in}^4$

$Iz := Iy$ $Iz = 0.049\ \text{in}^4$

Stresses on cross section:

Bending stress is: $\sigma := \frac{|Mmax| \cdot cz}{Iy}$ $\sigma = 110488\,psi$

Shear stress is: $\tau := \frac{Fz}{A}$ $\tau = 21783\,psi$

Find Modulus of Rupture of pin to check bending

From Bruhn, C4.16, for D/t=2 (solid pin), figure C4.11 $Frup := 330000 \cdot cp \cdot psi$

$Frup = 320100\,psi$

Margins of safety:

Stress ratios

Bending $Rb := \frac{\sigma \cdot FSu}{Frup}$ $Rb = 0.483$

Shear $Rs := \frac{\tau \cdot FSu}{Fsu_pin}$ $Rs = 0.254$

Margins of safety: $MSu := \frac{1}{\sqrt{Rb^2 + Rs^2}} - 1$ $MSu = 0.832$

2.1.15 WIF Adapter Bracket

WIF ADAPTER PLATE STRENGTH ANALYSIS

Drawings no.: SDG39135747

Units used: in, lbf

The objective of this analysis is to demonstrate the structural strength of the **WIF ADAPTER PLATE.** The WIF adapter plate is mounted on the sill tube to support the WIF socket.

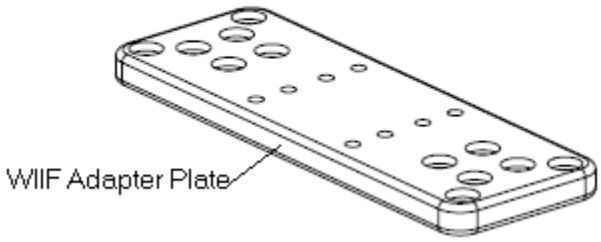

a). WIF adapter plate

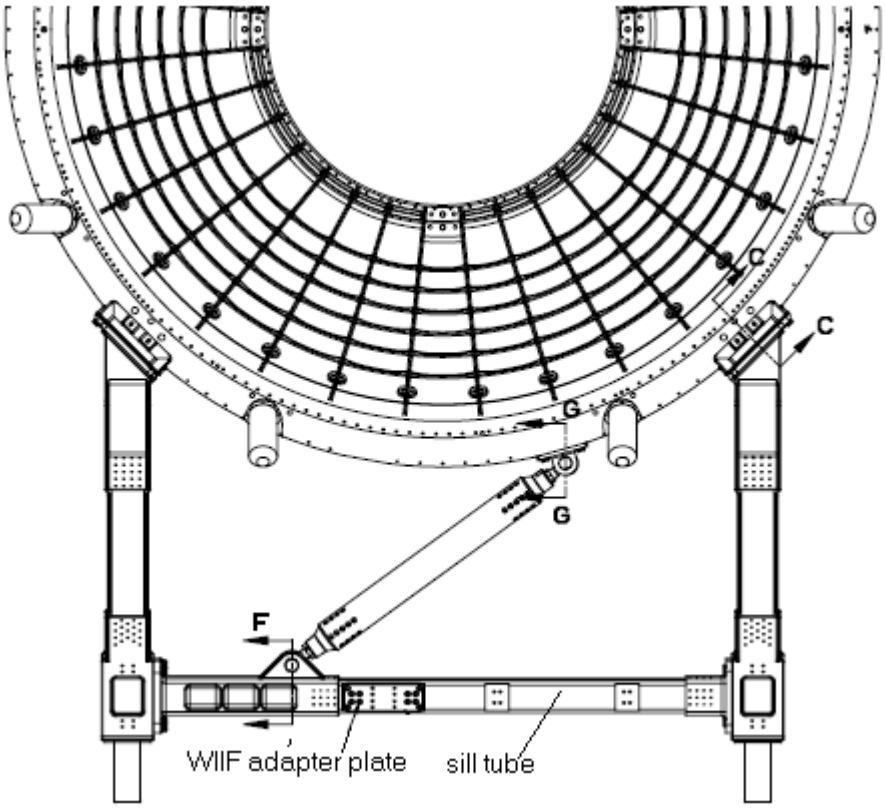

b). Location of WIF adapter plate

Figure 2.1.15-1 WIIF Adapter Plate

Load

Per CARD JSC-33499, WIF Socket is subjected to 4200in-lbf (bending moment), 4200 in-lbf (torsional moment), 274 (shear force), and 274 lbf (axial force).

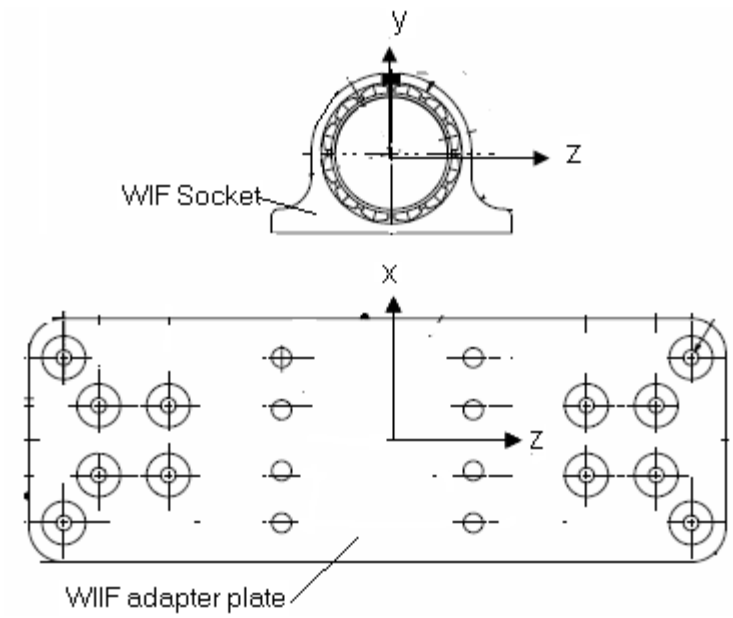

Figure 2.1.15-2 WIF Socket and WIIF Adapter Plate

Load case 1

$Fx := 274lbf$	Axial force
$Fy := 274 \cdot lbf$	Shear force
$Mx := 4200 \cdot in \cdot lbf$	Torsion moment
$Mz := 4200 \cdot in \cdot lbf$	Bending moment

Load case 2

$Fx := 274lbf$	Axial force
$Fz := 274 \cdot lbf$	Shear force
$Mx := 4200 \cdot in \cdot lbf$	Torsion moment
$My := 4200 \cdot in \cdot lbf$	Bending moment

The finite element model (FEM) of the WIIF adapter plate and sill tube is created using I-DEAS (file name: WIF-adapter-plate.dat). In the finite element model, shell elements are used. The SPC restraints in all degrees of freedom are applied to the attachment locations where the sill tube is fixed. The bolts connecting the plate to the sill tube are modeled as bush elements. The center of the WIF Socket is modeled as a nodal point and connected to the WIIF adapter plate with a rigid element. Forces and moments are applied to the center of the WIF Socket .The analysis was performed using NASTRAN. An overview of the FEM is shown in Figure 2.1.15-3.

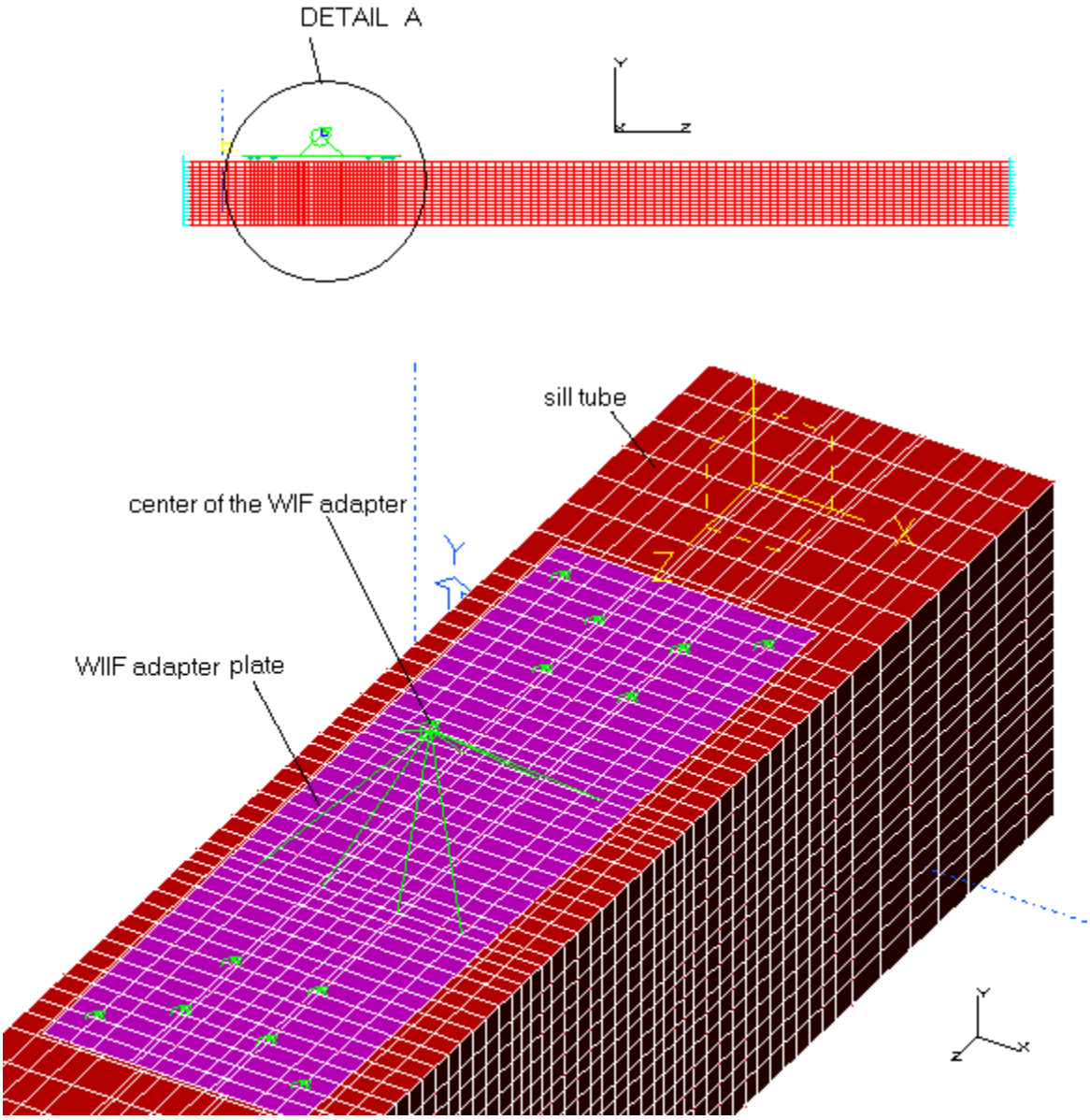

Figure 2.1.15-3 Finite Element Model

The Free-Free normal modes analysis was performed. The finite element model obtains six rigid body modes. Results showed that the finite element model passes the stiffness energy check.

```
RESULTS OF RIGID BODY CHECKS OF MATRIX KGG      (G-SET)  FOLLOW:
PRINT RESULTS IN ALL SIX DIRECTIONS AGAINST THE LIMIT OF   1.000000E-03
      DIRECTION        STRAIN ENERGY        PASS/FAIL
      ---------        -------------        ---------
        1               1.327280E-07          PASS
        2               8.003553E-10          PASS
        3               2.095476E-09          PASS
        4               5.859583E-07          PASS
        5               2.740852E-06          PASS
        6               1.775559E-07          PASS
RESULTS OF RIGID BODY CHECKS OF MATRIX KNN      (N-SET)  FOLLOW:
PRINT RESULTS IN ALL SIX DIRECTIONS AGAINST THE LIMIT OF   1.000000E-03
      DIRECTION        STRAIN ENERGY        PASS/FAIL
      ---------        -------------        ---------
        1               1.180597E-07          PASS
        2               1.461012E-08          PASS
        3               1.600711E-09          PASS
        4               2.781626E-07          PASS
        5               2.788014E-06          PASS
        6               1.577424E-07          PASS
RESULTS OF RIGID BODY CHECKS OF MATRIX KFF      (F-SET)  FOLLOW:
PRINT RESULTS IN ALL SIX DIRECTIONS AGAINST THE LIMIT OF   1.000000E-03
      DIRECTION        STRAIN ENERGY        PASS/FAIL
      ---------        -------------        ---------
        1               1.180597E-07          PASS
        2               1.461012E-08          PASS
        3               1.600711E-09          PASS
        4               2.781626E-07          PASS
        5               2.788014E-06          PASS
        6               1.577424E-07          PASS
```

The first 10 frequencies obtained from the Free-Free normal modes analysis are listed as below:

1	3.62E-04
2	4.87E-04
3	6.88E-04
4	8.15E-04
5	1.06E-03
6	2.12E-03
7	7.49E+02
8	1.51E+03
9	1.64E+03
10	2.28E+03

The finite element static analysis results show that maximum principal stress for the load case 1 is 13.8ksi as shown in Figure 2.1.15-4 (a) and that for the load case 2 is 8.55ksi as shown in Figure 2.1.15-4(b).

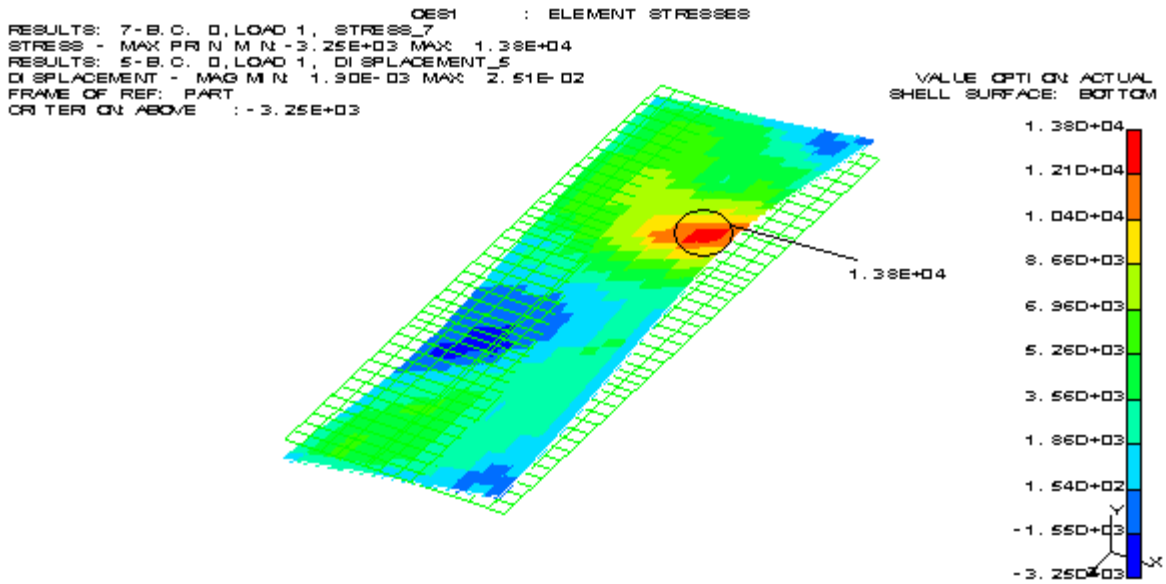

a) Load Case 1

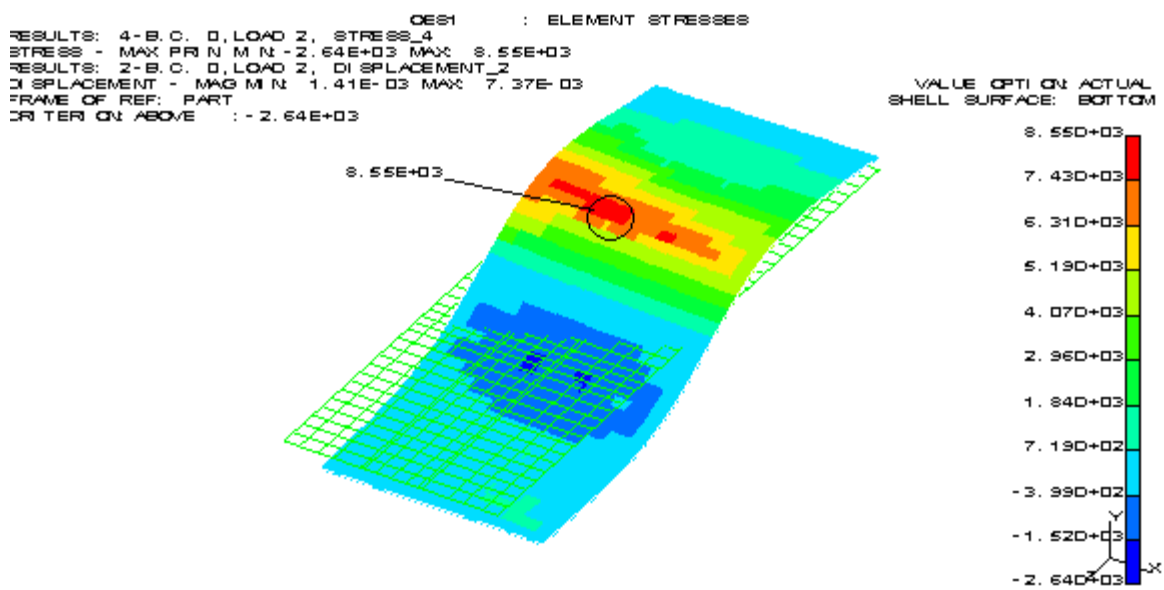

b) Load Case 2

Fig. 2.1.15-4 Maximum principal stress contours

The finite element static analysis results show that Von mises stress for the load case 1 is 12.5ksi as shown in Figure 2.1.15-5 (a) and that for the load case 2 is 7.74ksi as shown in Figure 2.1.15-5(b).

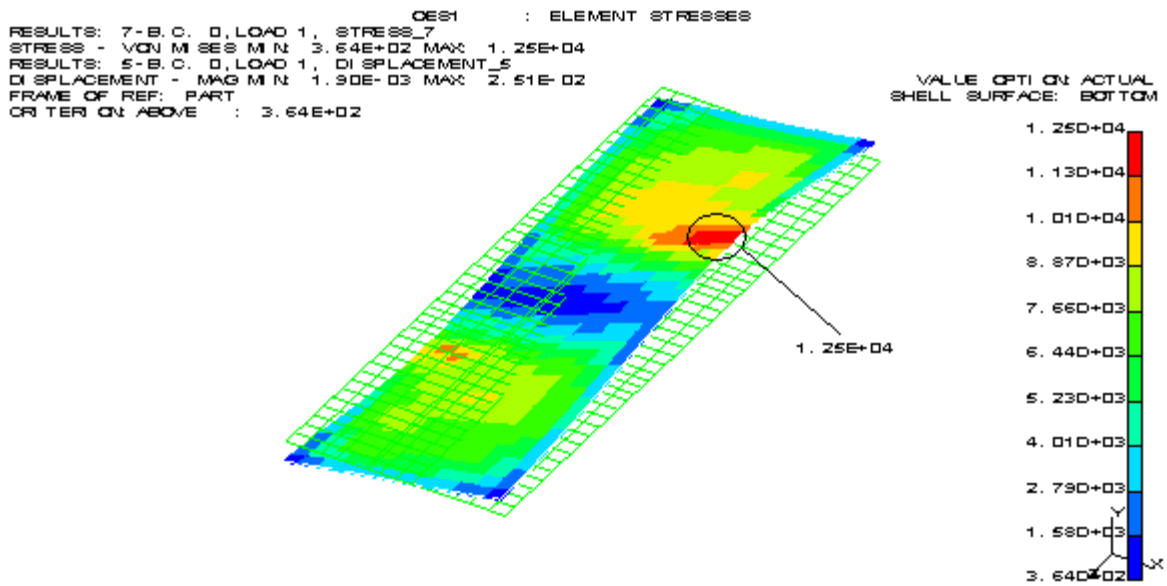

a) Load Case 1

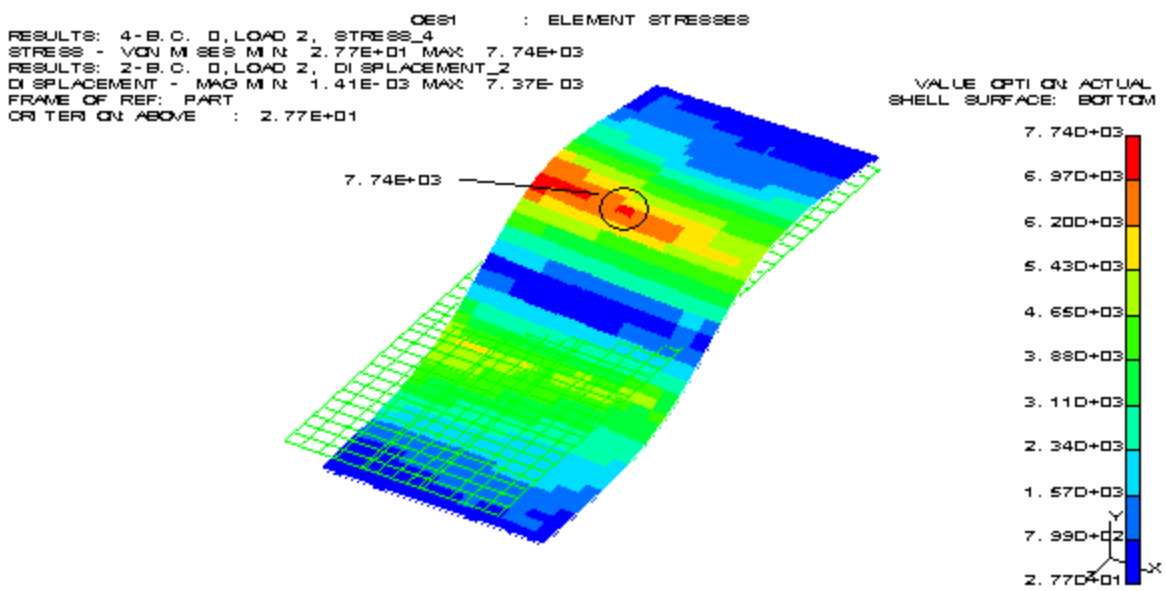

b) Load Case 2

Fig. 2.1.15-5 Von Mises stress contours

The finite element static analysis results show that maximum shear stress for the load case 1 is 6.97ksi as shown in Figure 2.1.15-6 (a) and that for the load case 2 is 4.27ksi as shown in Figure 2.1.15-6(b).

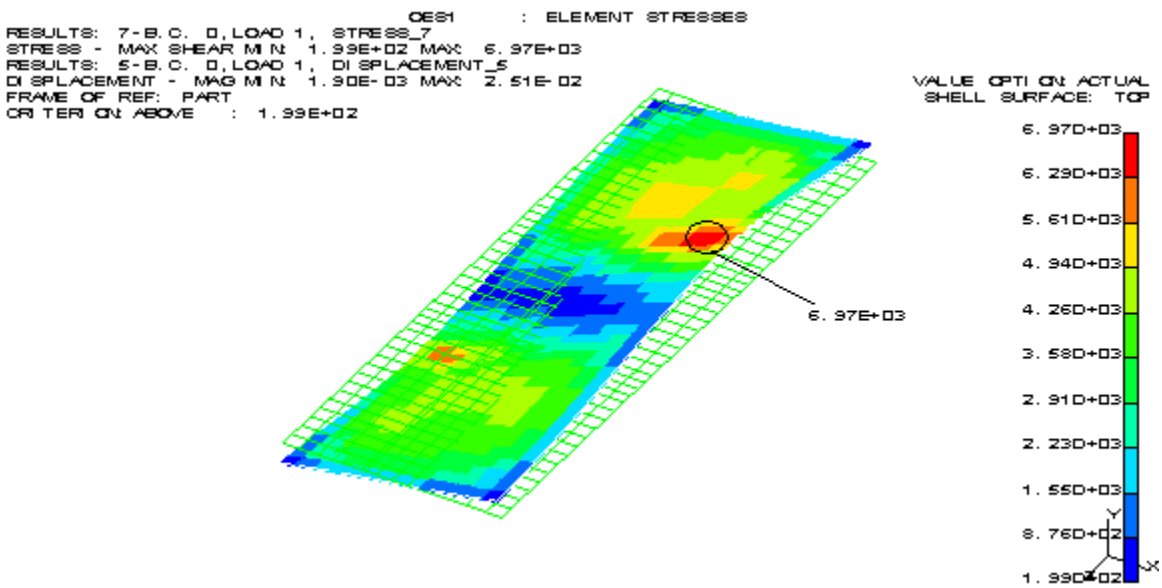

a) Load Case 1

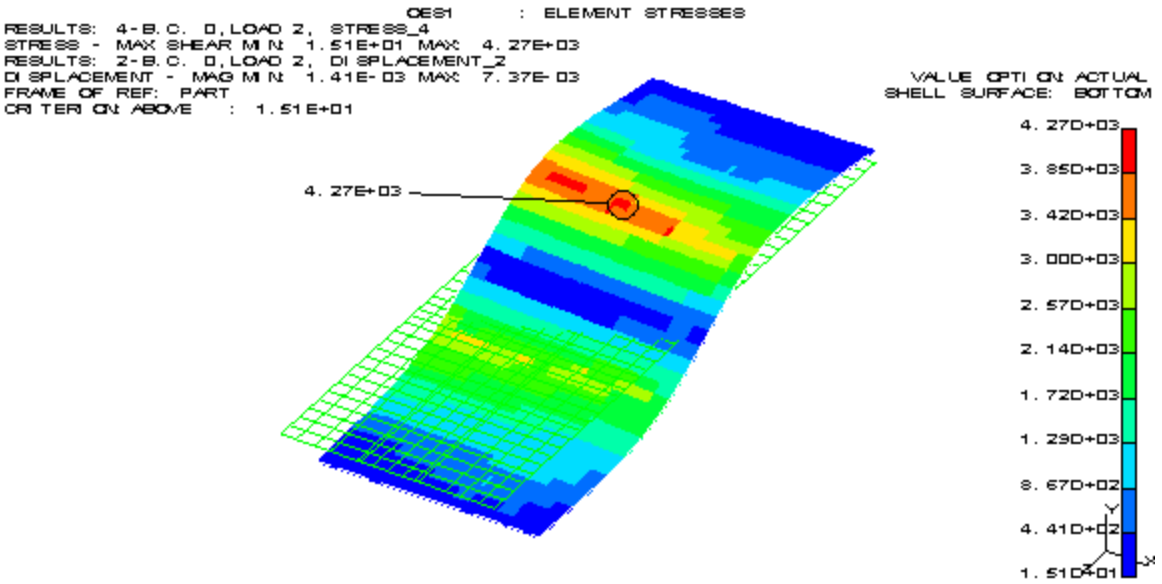

b) Load Case 2

Fig. 2.1.15-6 Maximum shear stress contours

The finite element static analysis results show that minimum principal stress for the load case 1 is -13.9ksi as shown in Figure 2.1.15-7 (a) and that for the load case 2 is -8.40ksi as shown in Figure 2.1.15-7(b).

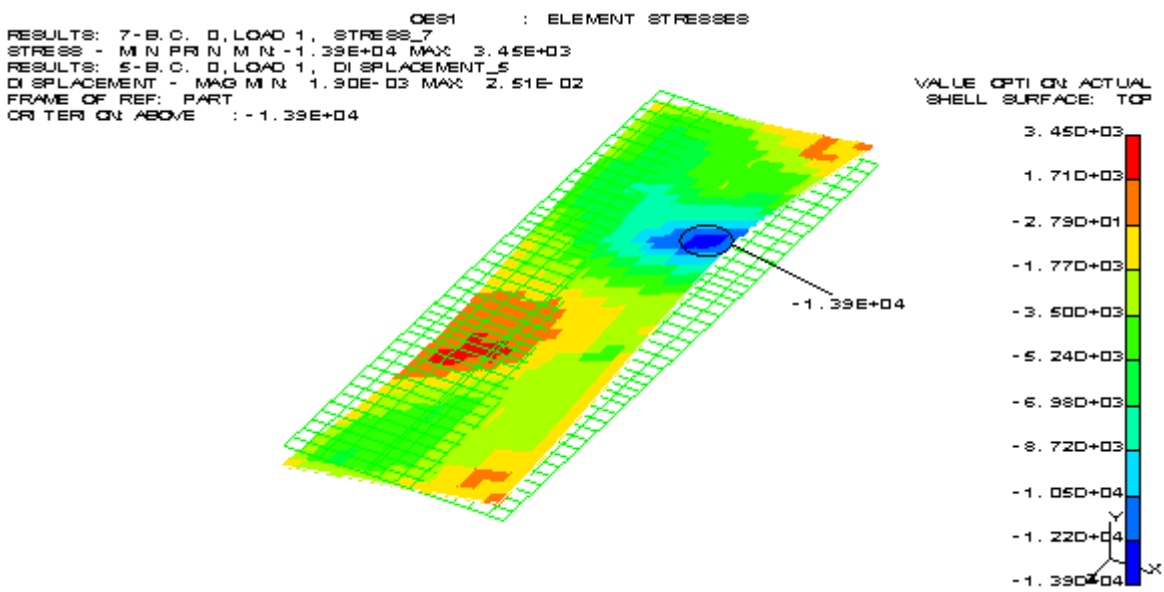

a) Load Case 1

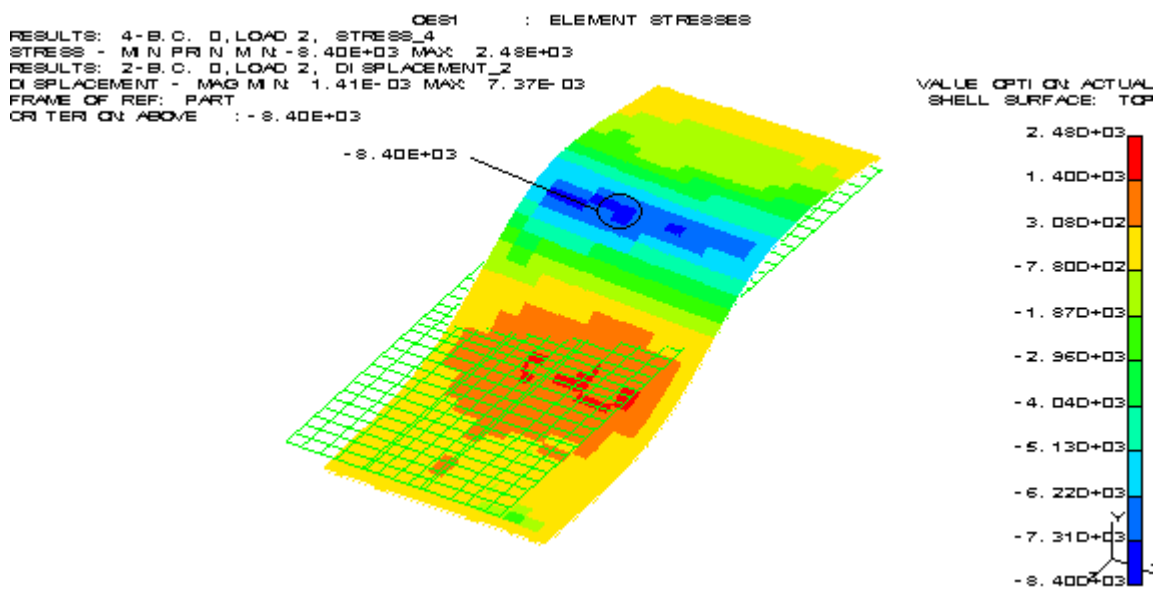

b) Load Case 2

Fig. 2.1.15-7 Minimum principal stress contours

The following max. stresses were retrieved from the NASPOST-processing of FE model data (see 2.1.15-11& 2.1.15-12):

$S1 := 13771 \cdot psi$ (Max. Principal stress)

$\sigma_{eq} := 12581 \cdot psi$ (Von Mises stress)

$\tau_{max} := 6967 \cdot psi$ (Max shear)

$S3 := -13933 \cdot psi$ (Min. Principal stress)

Material mechanical properties

Material: 6061-T651 AL ALY (SAE-AMS-QQ-A-250/11). From MIL -HDBK-5J page 3-265, Table 3.6.2.0(b2) (.6 thickness):

Tensile strength, ultimate: $F_{tu} := 42000 \cdot psi$

Tensile strength, yield: $F_{ty} := 35000 \cdot psi$

Compressive strength, yield: $F_{cy} := 35000 \cdot psi$

Shear strength, ultimate: $F_{su} := 27000 \cdot psi$

Factors of Safety and Design Factors:

$FS_y := 1.25$ Yield factor of safety

$FS_u := 2.0$ Ultimate factor of safety

The Expected temperature range is -50 to +140F (Ref. Appendix C2). 96% temperature de-rating is applied for on-orbit operation.

Margin of safety against yield failure:

$$MS_y := \frac{F_{ty} \cdot .96}{FS_y \cdot \sigma_{eq}} - 1 \qquad MS_y = 1.137$$

Margin of safety against ultimate failure:

$$MS_u := \frac{F_{tu} \cdot .96}{FS_u \cdot |S3|} - 1 \qquad MS_u = 0.447$$

Margin of safety against ultimate failure (shear):

$$MS_{us} := \frac{F_{su} \cdot .96}{FS_u \cdot |\tau_{max}|} - 1 \qquad MS_{us} = 0.86$$

```
### SELECT QUAD4-STRESSES
###   SORT VAR = MAXABS(MAX-PRIN-TOP,MIN-PRIN-TOP,
###              MAX-PRIN-BOT,MIN-PRIN-BOT);OPT=12
###   PRINT 7 8 11 12 15; NCASES = 2;
###   HEADING = 'WIF BRACKET : PRINCIPAL STRESS'
```

```
 08/01/2005 11:17                                          NASPOST 2.1
*******************************************************************************
*
*
*
*******************************************************************************

                                        +++ WIF BRACKET : PRINCIPAL STRESS +++

    ID    SUBCASE  MAX-PRIN-TOP  MIN-PRIN-TOP  MAX-PRIN-BOT  MIN-PRIN-BOT  MAXABS-PRIN


   50256        1  1.377120E+04  0.000000E+00 -6.366463E-12 -1.393386E+04  1.393386E+04

   50261        1  1.365888E+04  0.000000E+00 -9.094947E-13 -1.371934E+04  1.371934E+04
```

```
### $
###   SORT VAR = MAXABS(VON-MISES-TOP,VON-MISES-BOT);OPT=12
###   PRINT 9 13 17; NCASES = 2;
###   HEADING = 'WIF BRACKET : VON-MISES STRESS'
```

```
                                         +++ WIF BRACKET : VON-MISES STRESS +++

    ID    SUBCASE VON-MISES-TOP VON-MISES-BOT MAXABS-VON-MI


   50256        1  1.251798E+04  1.258113E+04  1.258113E+04

   50261        1  1.245734E+04  1.257357E+04  1.257357E+04
```

```
### $
###   SORT VAR = MAXABS(MAX-SHEAR-TOP,MAX-SHEAR-BOT);OPT=12
###   PRINT 10 14 16; NCASES = 2;
###   HEADING = 'WIF BRACKET : SHEAR STRESS'
```

```
 08/01/2005 11:17                                                    NASPOST 2.1
*******************************************************************************
*
*
*
*******************************************************************************

                                                  +++ WIF BRACKET : SHEAR STRESS +++

    ID     SUBCASE MAX-SHEAR-TOP MAX-SHEAR-BOT   MAXABS-SHR


   50256         1  6.885599E+03  6.966932E+03  6.966932E+03

   50261         1  6.829441E+03  6.859671E+03  6.859671E+03


     ### $
     ### EXIT
```

2.2 Lower USS-02 Assembly

2.2.1 Primary Centerbody Box Joint

Table 1 Minimum Margin of Safety Summary

Part / Dwg Number	Part Name / Description	Material & Heat Treatment	Critical Load Condition	Failure Mode	Margin of Safety	Reference Page	Comments
SDG39135759	Lower Center Body Assembly	7050-T7451 Al. Aly.	Landing	Tension	0.18 (Ult)	2.2.1 - 14	

Notes: Factor of Safety is 1.4 for Ultimate and 1.1 for Yield

The Stress Analysis of the Lower Center Body Assembly

1. Introduction of the Lower Center Body Assemblies

The four Lower Center Body Assemblies are the major structural joints in the lower USS-02. They are connected to 4x4x0.25 tubes to form the Lower Center Body Assemblies. The Lower Center Body Assemblies provide attachment to the Electromagnetic Calorimeter (ECAL), Ring Imaging Chernokov Counter (RICH) and the Struts for the Lower Time of Flight (LTOF).

The Keel Assembly is bolted to two of the Lower Center Body Assemblies because it is offset to the minus X-axis side of AMS-02. The Payload Attach System (PAS) is also attached to the Lower Center Body Assemblies. Two of the Lower Center Body Assemblies on Keel side are shown in Figure 2.2.1-1.

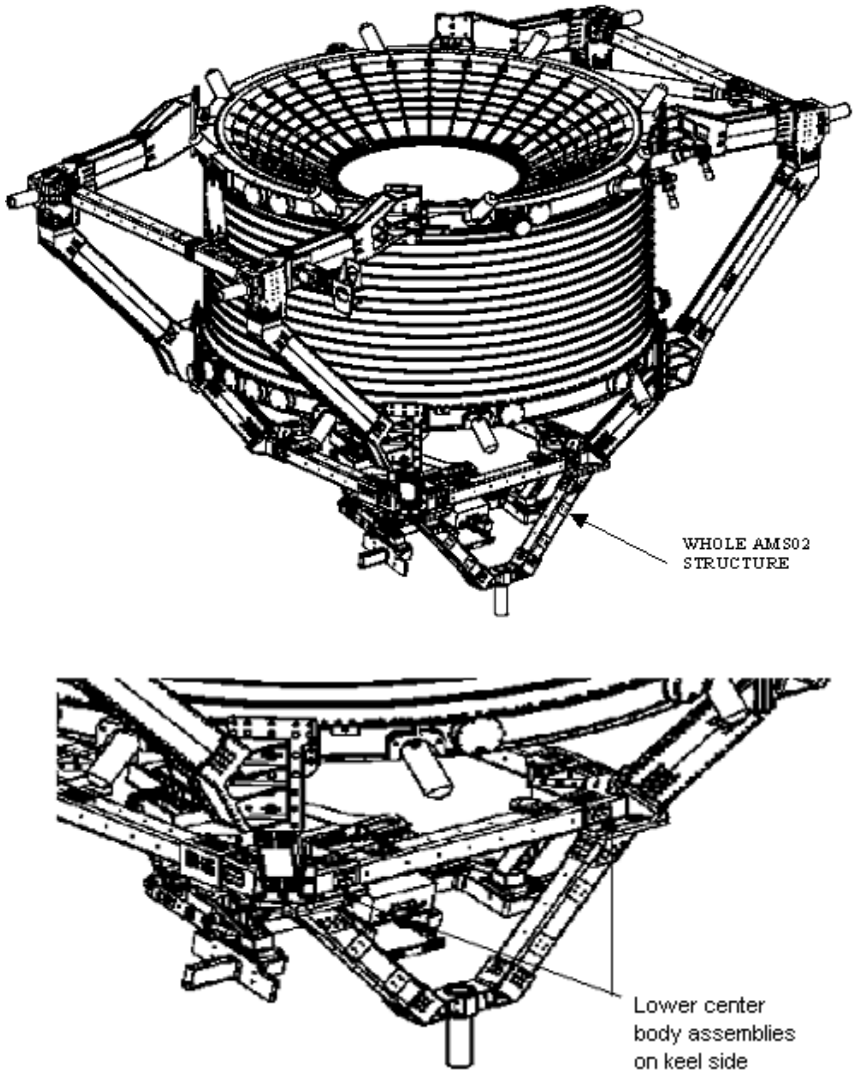

Figure 2.2.1-1 Lower Center Body Assemblies and AMS-02 Structure

The Lower Center Body Assembly consists of the Lower Centerbody Joint (SDG39135759-5760) and Lower Angle Beam Flange(SDG39135767-001). The Lower Centerbody Joint and Lower Angle Beam Flange are put together using bolt connection. The Lower Center Body Assembly is shown in Figure 2.2.1-2.

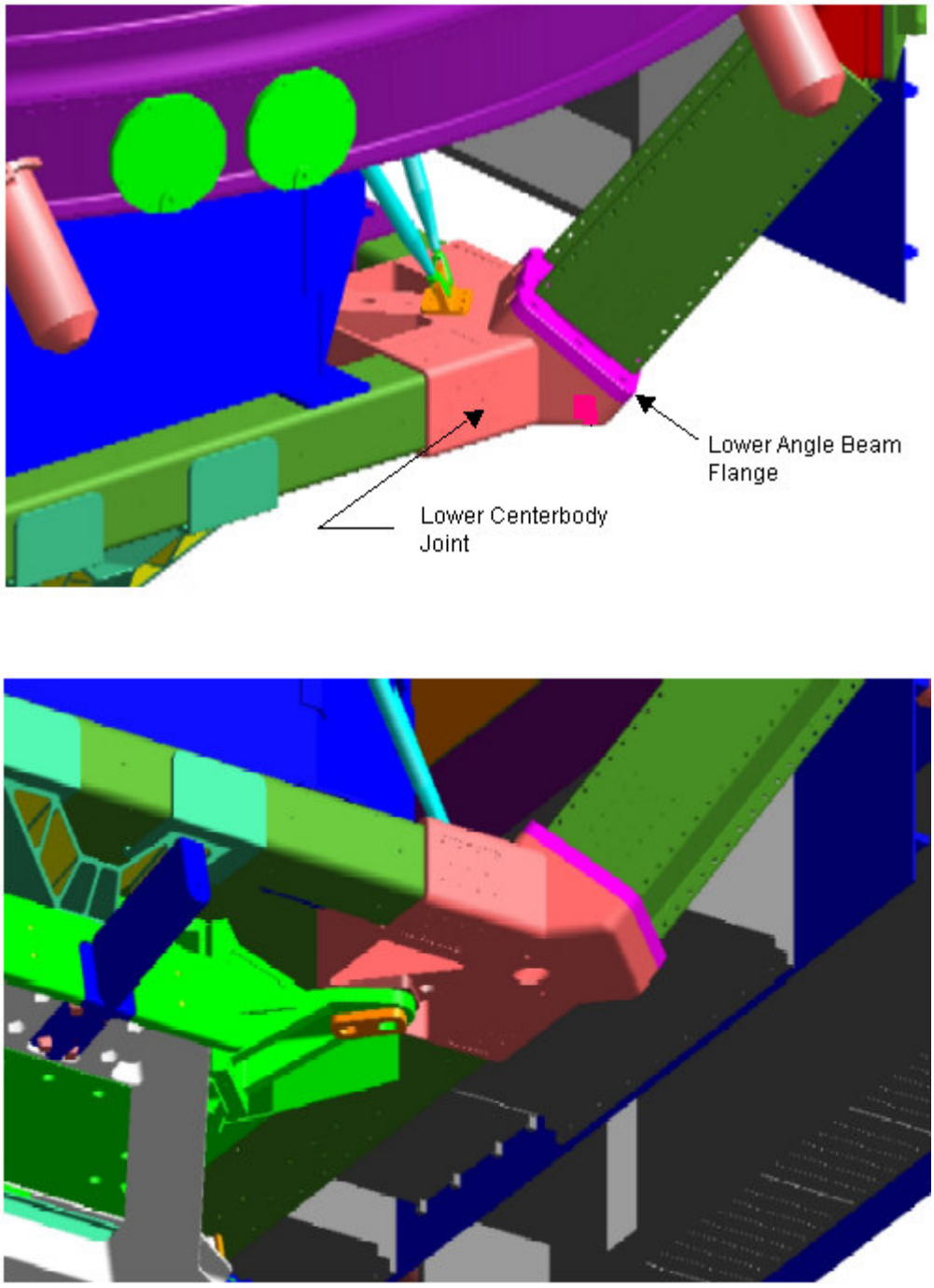

Figure 2.2.1-2 Lower Center Body Assembly

The Lower Centerbody joints with and without the Keel Connection are shown in Figure 2.2.1-3.

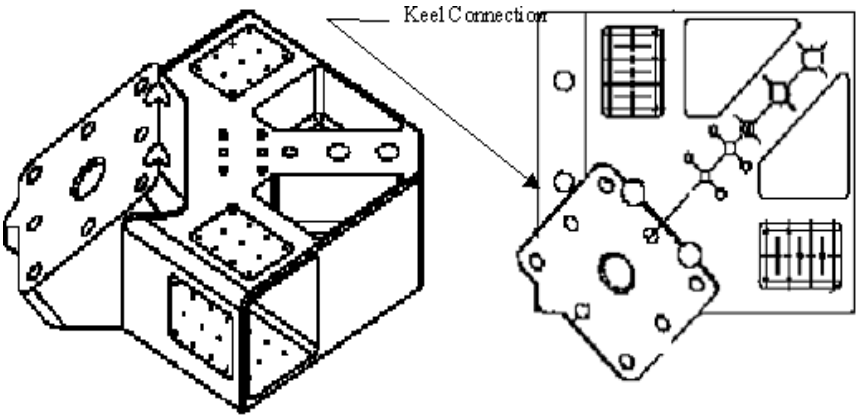

Figure 2.2.1-3a. Lower Centerbody Joint with the Keel Connection

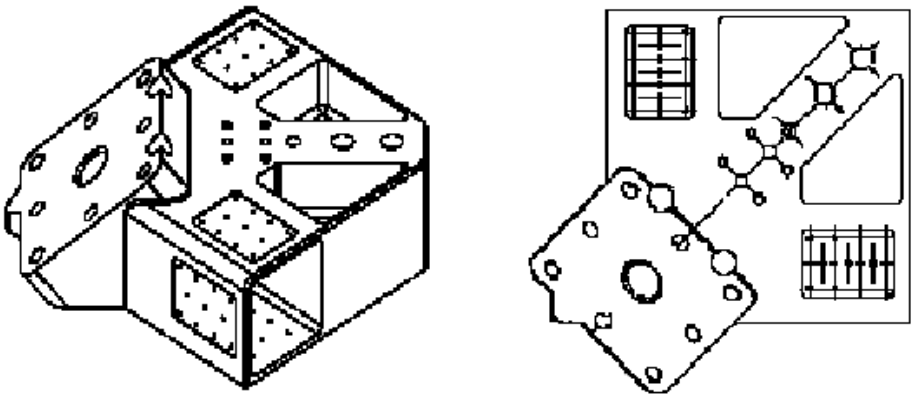

Figure 2.2.1-3b. Lower Centerbody Joint with no keel connection

2. *Method Used to Perform the Stress Analysis of the Lower Center Body Assemblies*

The FEA math models of the Lower Center Body Assembly were made using FEMAP software. The FEA models of the Lower Center body Assembly consist of the CQUAD4, CTRIA3, and also RBE's of SPC/MPC. After completion, the models of the Lower Center Body Assembly were connected to the USS-02 FEA model using RBE's. The solutions of the FEA math models of the Lower Center Body Assemblies were obtained from running NASTRAN 2000. The modifications, design changes, and engineering judgments were made based on these solutions.

3. *FEA models of the Lower Center Body Assembly and Assumptions*

When the FEA models of the Lower Center Body Assembly are put into the USS-02 model, we assume the USS02 FEA math model is correct. All the boundary conditions including the constraints and loading cases are also modeled correctly. The stress analysis of the Lower Center Body Assembly only focuses on the FEA models of the Lower Center Body Assembly. The picture below is showing the FEA models of the Lower Center Body Assembly are embedded into the USS-02 FEA model.

The NASTRAN data file of the Lower Center Body Assembly is put under the directory: /hsm/swang/ams02/centerbody-model, and named as "wholecenter-stress.dat"

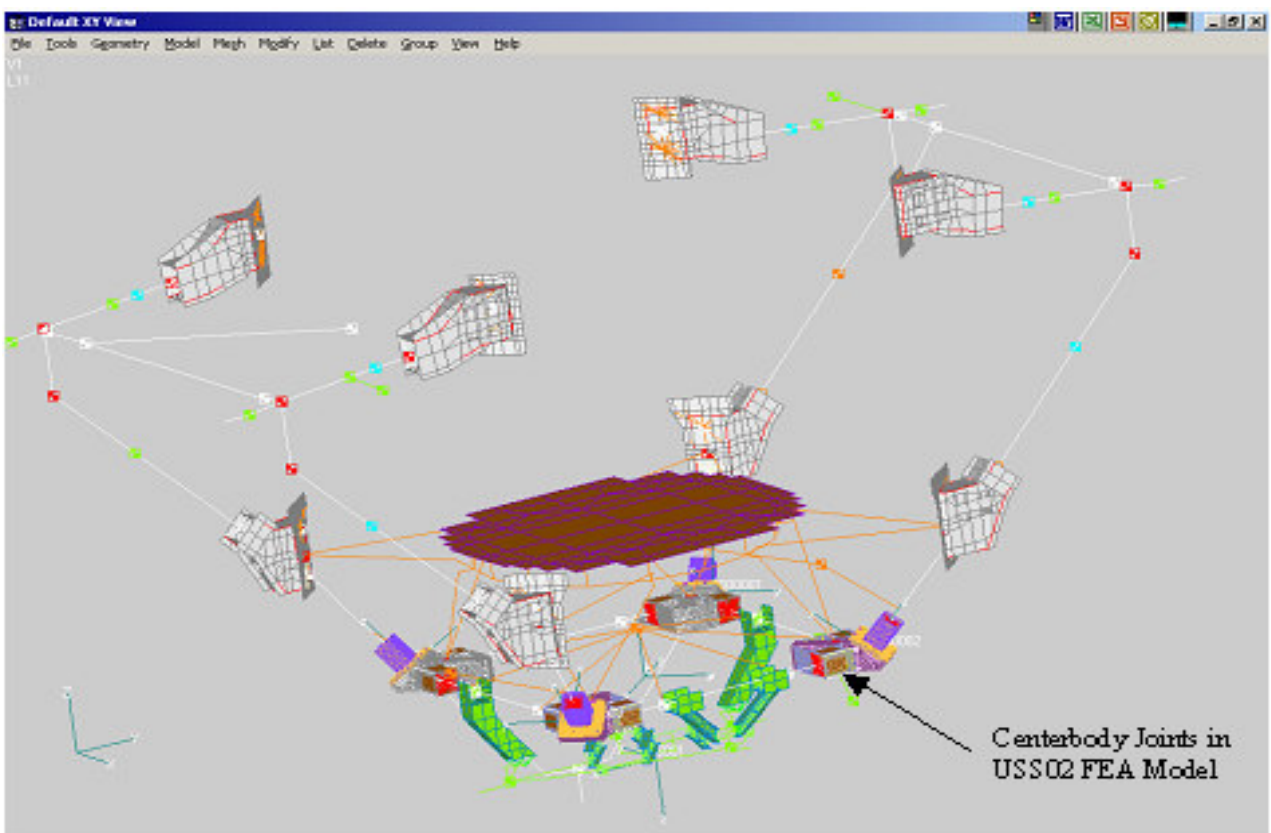

Figure 2.2.1-4 Center body Assembly FEA models embedded into the USS02 FEA model

A partial view of the FEA models for the Lower Center Body Assembly connected to the USS02 FEA model is shown in Figure 2.2.1-5.

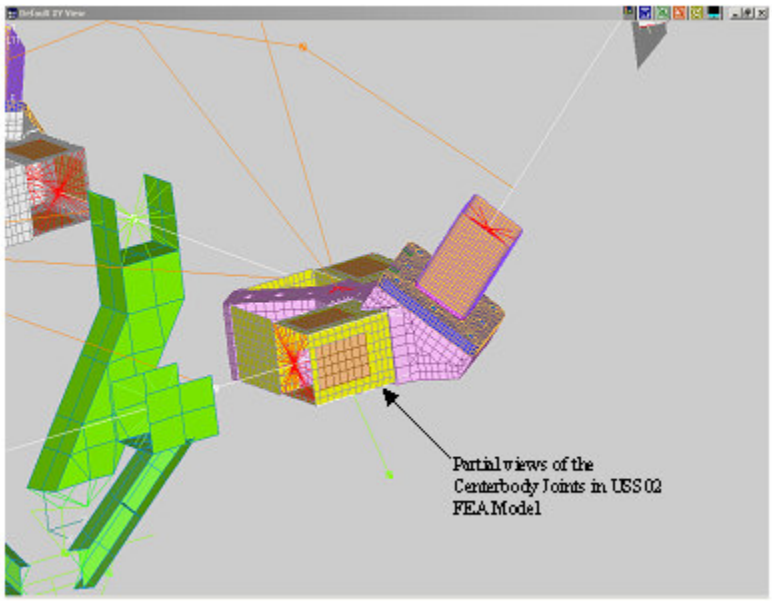

Figure 2.2.1-5 Partial view of FEA models for Lower Center Body Assembly in USS-02

4. *FEA model check of the Lower Center Body Assembly*

a. Model check of the Lower Angle Beam Flange

The model check was individually performed for the Lower Angle Beam Flange of the Lower Center Body Assembly using NASTRAN 2000. The results of the KGG, KNN, KFF and Six Rigid Body Modes are listed below.

<u>Output From Grid Point Weight Generator</u>

```
MASS AXIS     MASS              X-C.G.          Y-C.G.          Z-C.G.
     X        1.315147E-02    -1.124885E-17  3.353621E-06  2.306574E-06
     Y        1.315147E-02     2.876697E-06  6.671967E-19  2.306574E-06
     Z        1.315147E-02     2.876697E-06  3.353621E-06  1.061432E-17
                          I(S)
      *  1.031350E-01 -1.582851E-03 -2.895216E-03 *
      * -1.582851E-03  1.028009E-01 -2.633045E-03 *
      * -2.895216E-03 -2.633045E-03  1.056716E-01 *
                          I(Q)
      *  1.013771E-01                            *
      *              1.090683E-01                 *
      *                          1.011621E-01 *
                          Q
      *  7.037760E-01 -4.858798E-01  5.182858E-01 *
      * -7.093208E-01 -4.399838E-01  5.507071E-01 *
      * -3.954015E-02 -7.552053E-01 -6.542947E-01 *
```

RESULTS OF RIGID BODY CHECKS OF MATRIX KGG

DIRECTION	STRAIN ENERGY	PASS/FAIL
---	---	---
1	1.510480E-07	PASS
2	1.476790E-07	PASS
3	2.421875E-07	PASS
4	1.142014E-06	PASS
5	1.310629E-06	PASS
6	1.053521E-06	PASS

RESULTS OF RIGID BODY CHECKS OF MATRIX KNN

DIRECTION	STRAIN ENERGY	PASS/FAIL
---	---	---
1	1.518029E-07	PASS
2	1.491906E-07	PASS
3	2.395882E-07	PASS
4	8.965131E-05	PASS
5	8.948756E-05	PASS
6	1.082698E-04	PASS

RESULTS OF RIGID BODY CHECKS OF MATRIX KFF

DIRECTION	STRAIN ENERGY	PASS/FAIL
---	---	---
1	1.518029E-07	PASS
2	1.491906E-07	PASS
3	2.395882E-07	PASS
4	8.965131E-05	PASS
5	8.948756E-05	PASS
6	1.082698E-04	PASS

R E A L E I G E N V A L U E S

MODE NO.	EXTRACTION ORDER	EIGENVALUE	RADIANS	CYCLES	GENERALIZED MASS	GENERALIZED STIFFNESS
1	1	-4.740432E-05	6.885080E-03	1.095794E-03	1.000000E+00	-4.740432E-05
2	2	-1.028762E-05	3.207432E-03	5.104787E-04	1.000000E+00	-1.028762E-05
3	3	7.030321E-06	2.651475E-03	4.219954E-04	1.000000E+00	7.030321E-06
4	4	3.893978E-04	1.973317E-02	3.140631E-03	1.000000E+00	3.893978E-04
5	5	4.116972E-04	2.029032E-02	3.229305E-03	1.000000E+00	4.116972E-04
6	6	1.036883E-03	3.220066E-02	**5.124895E-03**	1.000000E+00	1.036883E-03
7	7	5.428700E+07	7.367972E+03	**1.172649E+03**	1.000000E+00	5.428700E+07

b. Model check of the Lower Centerbody Joint with no keel

The model check was individually performed for the Lower Centerbody Joint with no keel connection using NASTRAN 97. The results of the KGG, KNN, KAA and Six Rigid Body Modes are listed below.

Output From Grid Point Weight Generator

MASS AXIS	MASS	X-C.G.	Y-C.G.	Z-C.G.
X	1.048374E-01	0.000000E+00	-2.483113E+01	-5.532320E+01
Y	1.048374E-01	2.494448E+01	0.000000E+00	-5.532320E+01
Z	1.048374E-01	2.494448E+01	-2.483113E+01	0.000000E+00

```
                    I(S)
* 1.473682E+00 -5.220714E-01 -4.203794E-02 *
* -5.220714E-01  1.419779E+00  2.709832E-02 *
* -4.203794E-02  2.709832E-02  2.446938E+00 *
                    I(Q)
* 1.969206E+00                    *
*          9.224145E-01            *
*                    2.448779E+00 *
                    Q
* -7.240968E-01  6.885488E-01  3.980378E-02 *
* -6.892588E-01 -7.244894E-01 -6.125023E-03 *
* 2.462004E-02 -3.187021E-02  9.991887E-01 *
```

STIFFNESS MATRIX KGG 6 X 6

4.4895D-08 1.8070D-08 1.0160D-08 8.8238D-07 -2.8194D-06 1.8149D-06

-1.5505D-08 ***-2.3805D-07*** -1.3890D-08 -1.2884D-05 1.0476D-06 -6.1494D-06

2.7868D-08 1.7052D-09 ***2.2182D-07*** -5.0413D-06 -7.4311D-06 7.8437D-07

3.5303D-06 -1.2570D-05 -5.6532D-06 ***-5.6814D-04*** -6.4134D-05 -1.8535D-04

2.0431D-06 -2.6040D-06 -8.3836D-06 4.5842D-05 ***9.4625D-05*** -3.3723D-05

-1.7902D-06 -6.0599D-06 2.0306D-07 -3.3931D-04 8.7389D-05 ***-1.8300D-04***

STIFFNESS MATRIX KNN 6 X 6

4.6481D-08 4.9654D-09 1.1801D-09 3.2292D-07 -2.7184D-06 1.4605D-06

-2.6351D-08 ***-2.4155D-07*** -1.8722D-08 -1.2899D-05 1.7935D-06 -6.3091D-06

2.0846D-08 -1.6132D-09 ***2.4241D-07*** -5.6707D-06 -7.5192D-06 5.1567D-07

2.7137D-06 -1.2375D-05 -7.6955D-06 ***-5.0740D-04*** 3.2527D-05 -2.0356D-04

-2.6058D-07 -1.1123D-06 -9.4793D-06 1.5835D-04 ***2.4949D-04*** -6.8071D-05

-1.2195D-06 -4.3725D-06 -8.3048D-08 -2.4403D-04 6.6075D-05 ***-1.1716D-04***

STIFFNESS MATRIX KAA 6 X 6

4.6481D-08 4.9654D-09 1.1801D-09 3.2292D-07 -2.7184D-06 1.4605D-06

-2.6351D-08 ***-2.4155D-07*** -1.8722D-08 -1.2899D-05 1.7935D-06 -6.3091D-06

2.0846D-08 -1.6132D-09 ***2.4241D-07*** -5.6707D-06 -7.5192D-06 5.1567D-07

2.7137D-06 -1.2375D-05 -7.6955D-06 ***-5.0740D-04*** 3.2527D-05 -2.0356D-04

-2.6058D-07 -1.1123D-06 -9.4793D-06 1.5835D-04 ***2.4949D-04*** -6.8071D-05

-1.2195D-06 -4.3725D-06 -8.3048D-08 -2.4403D-04 6.6075D-05 ***-1.1716D-04***

R E A L E I G E N V A L U E S

MODE NO.	EXTRACTION ORDER	EIGENVALUE	RADIANS	CYCLES	GENERALIZED MASS	GENERALIZED STIFFNESS
1	1	-5.481677E-06	2.341298E-03	3.726292E-04	1.000000E+00	-5.481677E-06
2	2	7.257331E-07	8.518997E-04	1.355841E-04	1.000000E+00	7.257331E-07
3	3	1.130800E-06	1.063391E-03	1.692439E-04	1.000000E+00	1.130800E-06
4	4	1.760141E-06	1.326703E-03	2.111514E-04	1.000000E+00	1.760141E-06
5	5	2.543180E-06	1.594735E-03	2.538100E-04	1.000000E+00	2.543180E-06
6	6	6.711343E-06	2.590626E-03	**4.123109E-04**	1.000000E+00	6.711343E-06
7	7	1.174966E+08	1.083958E+04	**1.725173E+03**	1.000000E+00	1.174966E-06

c. Model check for the Lower Centerbody Joint with keel

The model check was individually performed for the Lower Centerbody Joint with keel connection using NASTRAN 97. The results of the KGG, KNN, KAA and Six Rigid Body Modes are listed below.

OUTPUT FROM GRID POINT WEIGHT GENERATOR

MASS AXIS SYSTEM (S)	MASS	X-C.G.	Y-C.G.	Z-C.G.
X	1.091047E-01	0.000000E+00	-2.472946E+01	-5.539093E+01
Y	1.091047E-01	-2.519904E+01	0.000000E+00	-5.539093E+01
Z	1.091047E-01	-2.519904E+01	-2.472946E+01	0.000000E+00

```
                    I(S)
* 1.553620E+00  4.588256E-01  8.878412E-02 *
* 4.588256E-01  1.596962E+00  8.578976E-03 *
* 8.878412E-02  8.578976E-03  2.677803E+00 *
                    I(Q)
* 2.029985E+00                            *
*            2.685599E+00                  *
*                        1.112802E+00      *
                    Q
* 6.831037E-01  9.032679E-02  7.247140E-01 *
* -7.254732E-01 -3.022486E-02  6.875865E-01 *
* 8.401186E-02 -9.954534E-01  4.488296E-02 *
```

MATRIX KGG (6 X 6)

-1.1503D-07 -5.0282D-08 -5.0778D-09 -2.8176D-06 6.3442D-06 -1.3897D-06

-7.9346D-08 ***8.1724D-08*** -2.2117D-08 5.1243D-06 3.7126D-06 -4.0628D-06

-9.2984D-09 -2.4015D-08 ***-8.0967D-08*** 9.4170D-07 -1.7348D-06 6.3550D-07

-2.6541D-06 1.1040D-05 2.8532D-06 ***5.3750D-04*** 2.2043D-04 -3.6548D-04

4.1767D-06 2.5212D-06 -3.1148D-06 2.1968D-04 ***-3.1640D-04*** 3.6055D-05

-3.0176D-06 3.8739D-07 1.3185D-06 -1.6186D-05 2.0489D-04 ***-6.9951D-05***

MATRIX KNN (6 X 6)

-4.0443D-09 -4.1369D-08 -4.1704D-09 -2.3518D-06 3.0546D-07 1.0831D-06

-6.9589D-08 ***8.0780D-08*** -2.0137D-08 5.0534D-06 3.2127D-06 -3.8736D-06

-1.6619D-09 -3.9210D-08 ***-5.2602D-08*** -5.1020D-07 -1.3928D-06 1.1901D-06

-3.1709D-06 6.8108D-06 2.5766D-06 ***3.1953D-04*** 2.4433D-04 -2.7196D-04

-4.8954D-06 1.1577D-06 -3.3970D-06 1.5164D-04 ***1.7424D-04*** -1.6063D-04

-3.8262D-06 7.9885D-07 1.4220D-06 1.6600D-06 2.5559D-04 ***-1.1185D-04***

MATRIX KAA (6 X 6)

-4.0443D-09 -4.1369D-08 -4.1704D-09 -2.3518D-06 3.0546D-07 1.0831D-06

-6.9589D-08 ***8.0780D-08*** -2.0137D-08 5.0534D-06 3.2127D-06 -3.8736D-06

-1.6619D-09 -3.9210D-08 ***-5.2602D-08*** -5.1020D-07 -1.3928D-06 1.1901D-06

-3.1709D-06 6.8108D-06 2.5766D-06 ***3.1953D-04*** 2.4433D-04 -2.7196D-04

-4.8954D-06 1.1577D-06 -3.3970D-06 1.5164D-04 ***1.7424D-04*** -1.6063D-04

-3.8262D-06 7.9885D-07 1.4220D-06 1.6600D-06 2.5559D-04 ***-1.1185D-04***

REAL EIGENVALUES

MODE NO.	EXTRACTION ORDER	EIGENVALUE	RADIANS	CYCLES	GENERALIZED MASS	GENERALIZED STIFFNESS
1	1	-4.026311E-06	2.006567E-03	3.193551E-04	1.000000E+00	-4.026311E-0
2	2	-2.345099E-06	1.531372E-03	2.437254E-04	1.000000E+00	-2.345099E-06
3	3	-1.100532E-06	1.049063E-03	1.669635E-04	1.000000E+00	-1.100532E-06
4	4	8.763163E-07	9.361177E-04	1.489878E-04	1.000000E+00	8.763163E-07
5	5	1.617213E-06	1.271697E-03	2.023968E-04	1.000000E+00	1.617213E-06
6	6	2.656598E-06	1.629907E-03	**2.594078E-04**	1.000000E+00	2.656598E-06
7	7	1.104021E+08	1.050724E+04	**1.672279E+03**	1.000000E+00	1.104021E+08

The results of the model checks show that the FEA models of the Lower Center Body Assembly are correct because the underlined translation values of each matrix are close to zero. The first six modes are also close to zero and transition modes are well separated.

The NASTRAN data files used for the model check are put under the directory:
/hsm/swang/ams02/checkmodel/ckcentbody

5. Loads and Constraints.

The FEA models of the Lower Center Body assembly are connected with the USS-02 FEA models using RBE's and CBUSH elements. The entire AMS02 FEA model is constrained at the five Trunnion locations.

A number of load cases under the launch, landing and thermal conditions were investigated in order to identify the worst load cases. The NASTRAN data files of the load cases are within the directories below. The Load Factors of the load cases are applied at the C.G. of the entire AMS02 FEA model when running NASTRAN. The combined Load Factors are taken from Table 4.1 of Page 16 in AMS02 Structural Verification Plan for STS and ISS (JSC-28792, Rev.B).

In the directory: /hsm/swang/ams02/nonlin/centerbody-new/1000, the data files are for launch condition named from R1001.dat to R1064.dat.

In the directory: /hsm/swang/ams02/nonlin/centerbody-new/2000, the data files are for landing condition named from R2001.dat to R2064.dat.

In the directory: /hsm/swang/ams02/nonlin/centerbody-new/4000, the data files are for thermal condition named from R4001.dat to R4064.dat.

6. Maximum Stresses and Calculation for the Margins of Safety

The maximum stresses of the elements and the relative worst Load Cases are listed in Table2. The maximum stresses were sorted out from the pch data files of the load cases using the NASPOST. The sorted-out data files for the load cases are attached in Appendix A5. The f06 files of the load cases are used to perform the post-processing of the FEA models of the Lower Center Body Assembly. The f06 and pch files of NASTRAN for the FEA models of the Lower Center Body Assembly are put under directory below.

/hsm/swang/ams02/nonlin/centerbody-new/1000/2-03, and on February 2003.
/hsm/swang/ams02/nonlin/centerbody-new/2000/2-03, and on February, 2003.
/hsm/swang/ams02/nonlin/centerbody-new/4000/2-03, and on February, 2003.

Table 2. Maximum Stresses and the Elements with Worst Load Cases

Ele ID	Ele Types	Load Case	Max-PRIN (Top)	Von-MISES (Top)	Max-shear (Top)	Max-PRIN (Bot)	Von-MISES (Bot)	Max-Shear (Bot)
6101530	QUAD4	4015	3.8607E+04	3.7449E+04	1.9304E+04	3.1242E+04	3.1530E+04	1.5905E+04
6103019	QUAD4	2058	3.3238E+04	3.3150E+04	1.6619E+04	**3.8815E+04**	3.7491E+04	1.9407E+04
6104879	QUAD4	4037	7.2760E-12	3.8206E+04	1.9327E+04	-3.6380E-12	3.7980E+04	1.9334E+04
6101879	QUAD4	2015	3.8033E+04	3.6220E+04	1.9016E+04	3.7187E+04	**3.8259E+04**	**1.9623E+04**
6104879	QUAD4	4037	-3.8654E+04	3.8206E+04	1.9327E+04	-3.8669E+04	3.7980E+04	1.9334E+04
6104879	QUAD4	2037	-3.8635E+04	3.8190E+04	1.9317E+04	-3.8676E+04	3.7986E+04	1.9338E+04

Based on Table2, the following maximum stresses will be used to perform the margin calculation of the stress analysis for the Lower Center body Assembly.

$\sigma t := 38815\,psi$ (max. tensile at R2058, Ele 6103019, Max-prin on Page A5 - 3)

$\sigma y := 38259\,psi$ (max. yield at R2015, Ele 6101879, Von-MISES on Page A5 - 4)

$\tau s := 19623\,psi$ (max. shear at R2015, Ele 6101879, Max-Shear on Page A5 - 5)

Lower Center Body Assembly, **7050-T7451** Al. Aly. (AMS 4050)

$Ftu := 70000\,psi$ ultimate tensile strength

$Fty := 60000\,psi$ tensile yield strength

$Fsu := 43000\,psi$ shear strength

$\eta ult := 0.92$ (ultimate thermal factor at 140 F)

$\eta yld := 0.98$ (uield thermal factor at 140 F)

$FSy := 1.1$ yield Factor of Safety

$FSu := 1.4$ ultimate Factor of Safety

Margins of Safety

Ultimate $MSu := \frac{\eta ult \cdot Ftu}{\sigma t \cdot FSu} - 1$ $MSu = 0.185$ #

Yield $MSy := \frac{\eta yld \cdot Fty}{\sigma y \cdot FSy} - 1$ $MSy = 0.397$ #

Shear $MSs := \frac{\eta ult \cdot Fsu}{\tau s \cdot FSu} - 1$ $MSs = 0.44$ #

6. Locations of the Maximum Stresses in the Lower Center Body Assembly

a. Locations of the Elements with the Maximum Stresses

The Figure 2.2.1-6 below shows the FEA models of the Center Body Assembly isolated from the USS-02 FEA models. The locations of the elements with high stresses are also indicated in Figure 2.2.1-6.

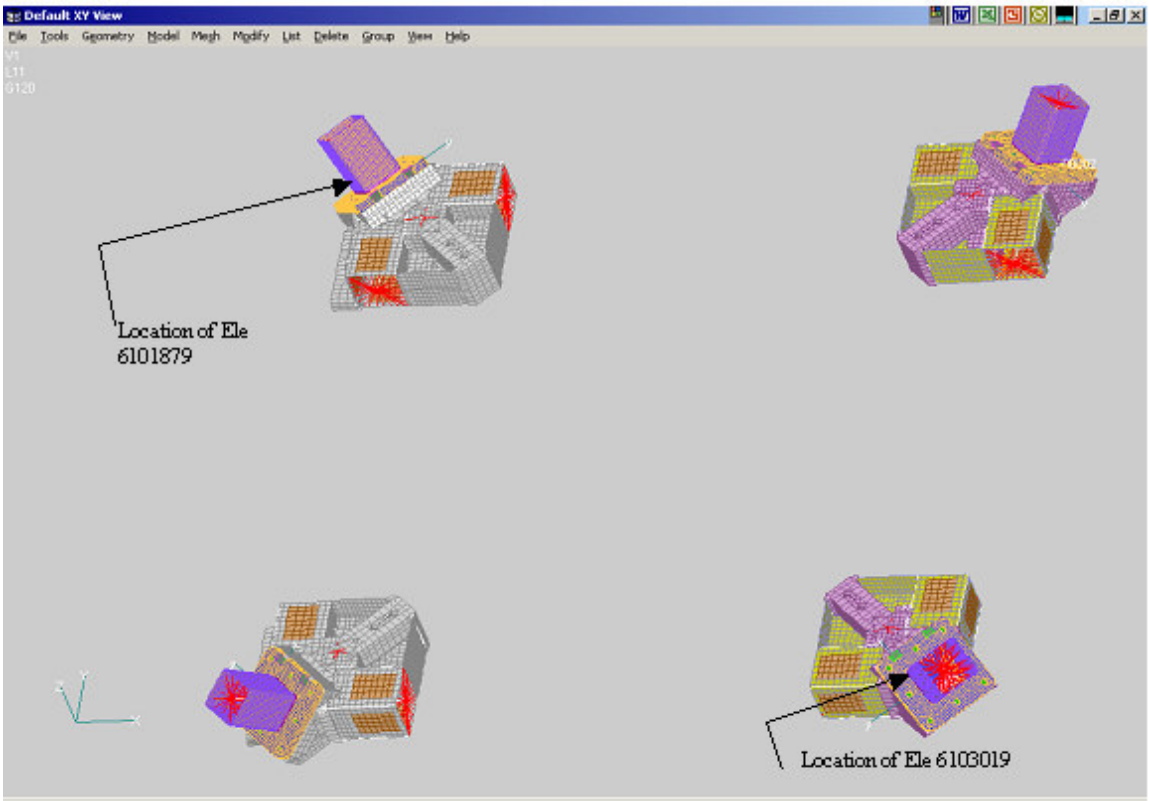

Figure 2.2.1-6 Locations of the Elements with the Maximum Stresses

b. Locations of the Maximum Stresses

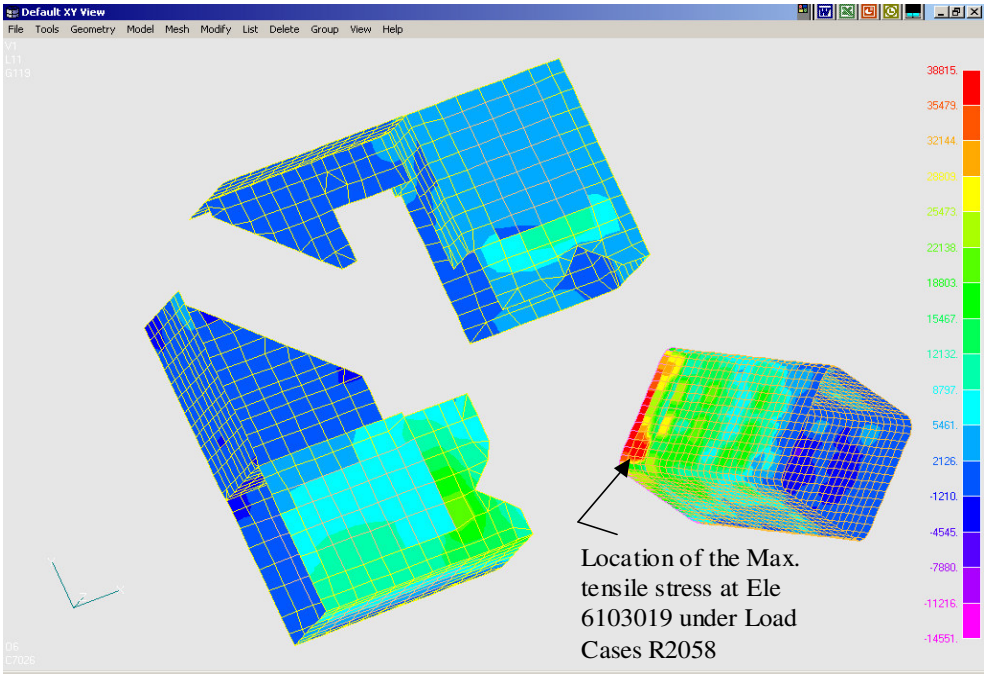

Figure 2.2.1-7a. Location of the Maximum Tensile Stress on the Plate Element

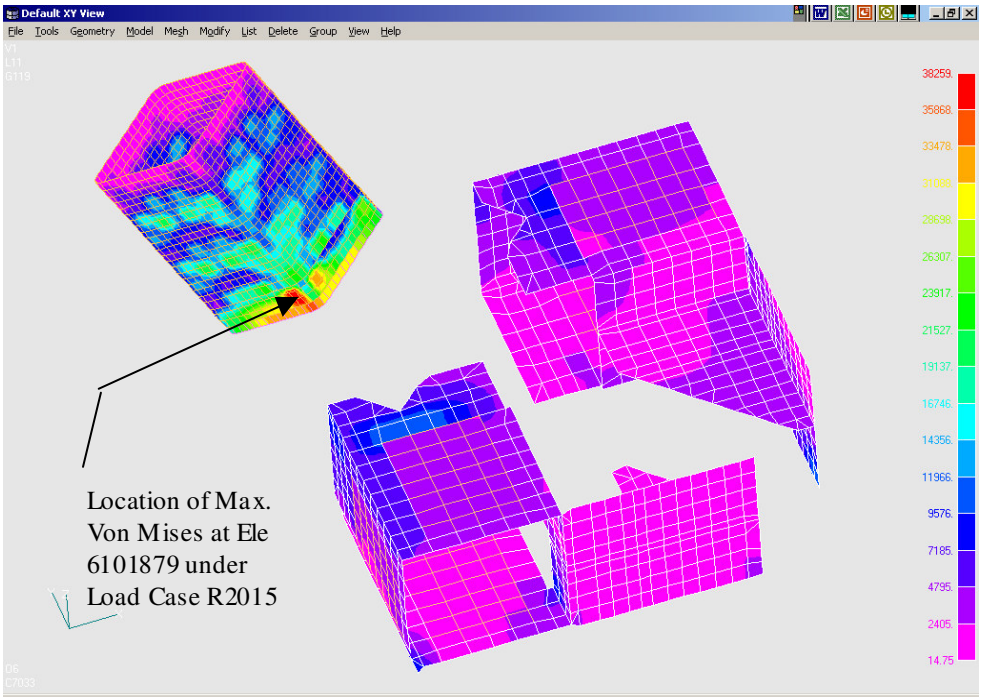

Figure 2.2.1-7b Location of the Maximum Yield Stress on the Plate Element

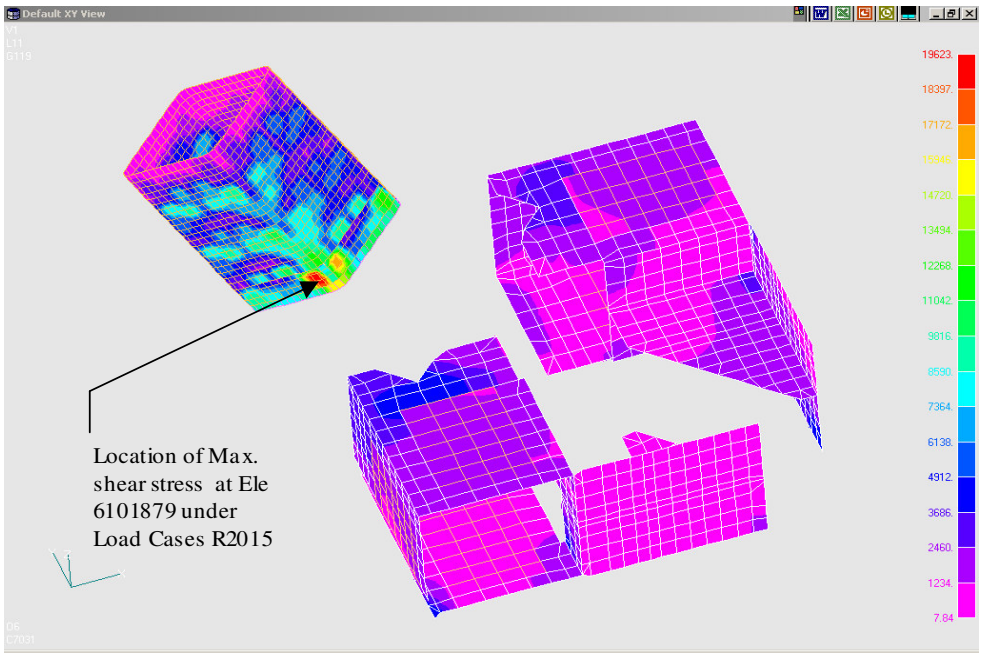

Figure 1.2.2.7c. Location of the Maximum Shear Stress on the Plate Element

c. Locations of the Elements with Artificial High Stresses

The RBE's elements are used to make the connections between the plate elements and solid elements in the Lower Angle Beam Flange FEA model. The stresses of the solid elements at the connections are artificially high due to the applications of the RBE's. On the other hand, the high stresses are due to that the model can not simulate the connection with a radius. Therefore, the high stresses on the solid elements will not be used to perform the stress analysis.

The pictures below show the artificial high stresses due to the RBE's connections.

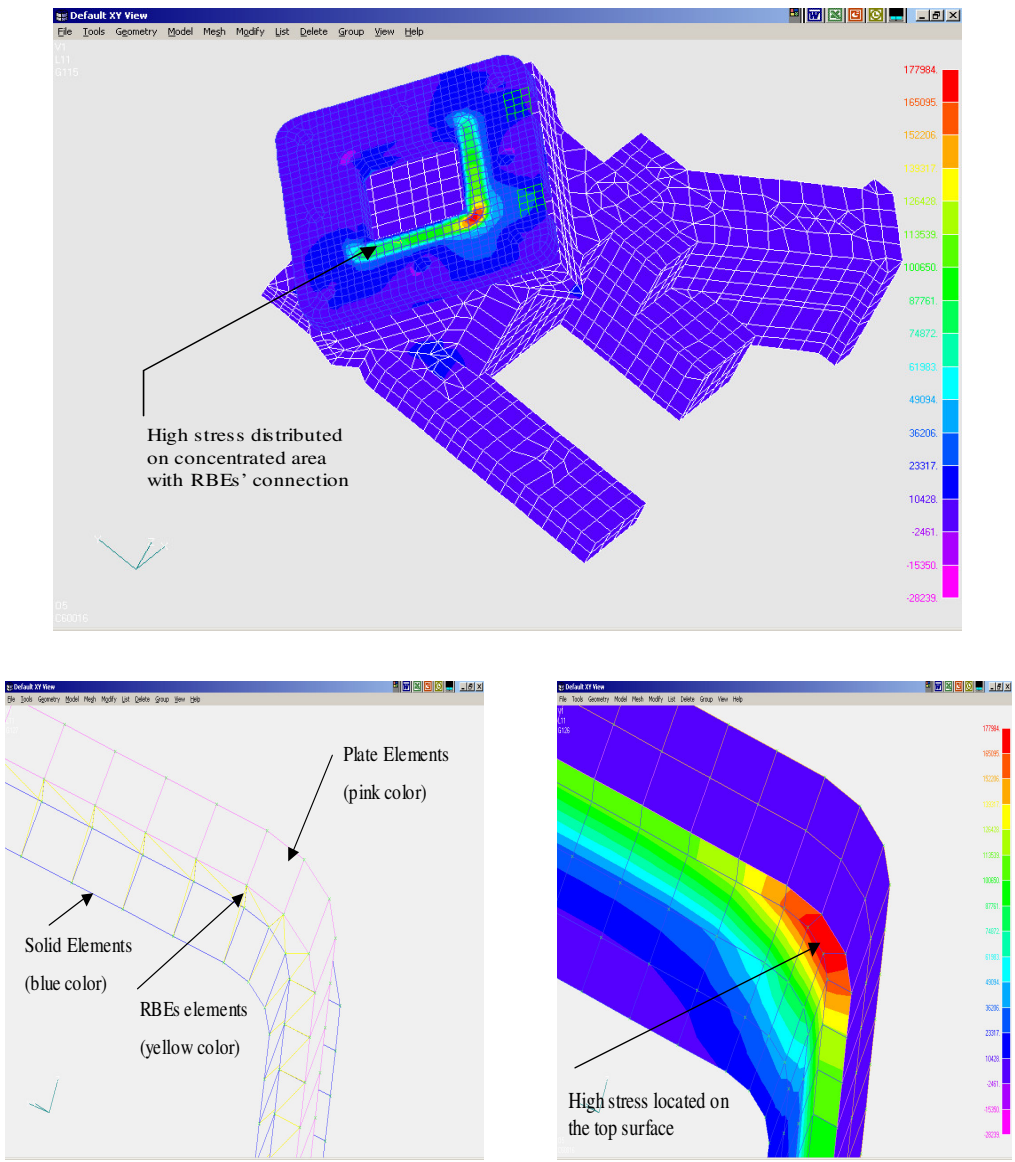

Figure 2.2.1-8 Locations of the Elements with Artificial High Stresses

2.2.2 Secondary Centerbody Box Joint

The stress analysis of Secondary Centerbody Box Joint was covered in the previous Section 2.2.1.

2.2.3 EMC Box Tube

EMC BOX TUBE

Since part is a slender beam with compressive loads, buckling is critical.

In Finite Element Model of USS-02 version 2-04 shown in Figure 2.2.3-1, EMC Box Tube includes Element Ids of 1501-1517. These elements has Property Id of 1004.

Figure 2.2.3-1: EMC Box Tube shown in Lower uss2-04 Model

Factor of Safety, $FS := 1.4$

Material: AL 7075-T73511 *(Ref. MIL-HDBK-5H, Table 3.7.4.0(g_2), p.3-361; Thickness: 0.250-0.499)*

Compressive modulus, $Ec := 10700000 \cdot psi$

Ultimate tensile strength, $ftu := 68000 \cdot psi$

Tensile yield strength, $fty := 57000 \cdot psi$

Compression yield strength, $fcy := 57000 \cdot psi$

Ultimate shear strength, $fsu := 37000 \cdot psi$

Section: 4.0" x 4.0" x 0.25" Tube *(Ref. Dwg# SDG39135761, SectionA-A)*

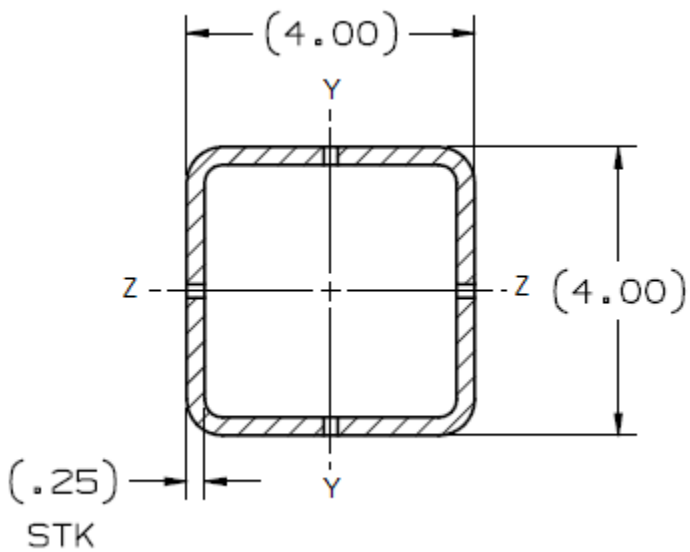

Shape Factor, $f := 1.22$ *(Ref. Structural Engineering Handbook, 4th Edition, Table 7, p.11-15)*

Supported length, $L := 35.62 \cdot in$ *(Between two Centerbody Joints)*

Width, $Dy := 4.0 \cdot in$

For torsional calculation, use: $Dytor := 4.0 \cdot in$

Depth, $Dz := 4.0 \cdot in$

For torsional calculation, use: $Dztor := 4.0 \cdot in$

Thickness, $t := 0.25 \cdot in$

Define: $b := 2 \cdot t$

Properties of cross-section: *(Ref. Table 2.2.3-1)*

Area, $A := 3.75 \cdot in^2$

Moment of Inertia, $Iy := 8.828 \cdot in^4$

$Iz := 8.828 \cdot in^4$

First moments, $Qy := 2.641 \cdot in^3$

$Qz := 2.641 \cdot in^3$

Table 2.2.3-1a: Property about Y-Y axis

Portion	b	d	Area, A	z	Az	Az^2	Icy	Iy'
1	0.250	4.000	1.000	2.000	2.000	4.000	1.333	5.333
2	3.500	0.250	0.875	3.875	3.391	13.139	0.005	13.143
3	0.250	4.000	1.000	2.000	2.000	4.000	1.333	5.333
4	3.500	0.250	0.875	0.125	0.109	0.014	0.005	0.018
Sum		**A=**	**3.750**		7.500			23.828

z_bar= 2.000

Iyy= 8.828

Table 2.2.3-1b: Property about Z-Z axis

Portion	b	d	Area, A	y	Ay	Ay^2	Icz	Iz'
1	4.000	0.250	1.000	0.125	0.125	0.016	0.005	0.021
2	0.250	3.500	0.875	2.000	1.750	3.500	0.893	4.393
3	4.000	0.250	1.000	3.875	3.875	15.016	0.005	15.021
4	0.250	3.500	0.875	2.000	1.750	3.500	0.893	4.393
Sum		**A=**	**3.750**		7.500			23.828

y_bar= 2.000
Izz= 8.828

Table 2.2.3-1c: First Moment about Y-Y axis

Portion	b	d	Area, A	z	Qyy
1	0.250	2.000	0.500	1.000	0.500
2	3.500	0.250	0.875	1.875	1.641
3	0.250	2.000	0.500	1.000	0.500
Sum				**Qyy=**	**2.641**

Table 2.2.3-1d: First Moment about Z-Z axis

Portion	b	d	Area, A	y	Qzz
3	4.000	0.250	1.000	1.875	1.875
2	0.250	1.750	0.438	0.875	0.383
4	0.250	1.750	0.438	0.875	0.383
Sum				**Qzz=**	**2.641**

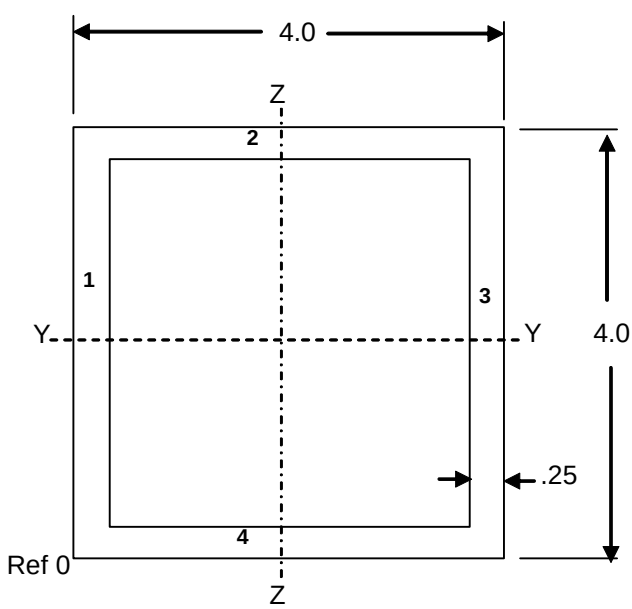

Section modulus, $Sy := \dfrac{Iy}{\frac{1}{2}\cdot Dz}$ $\quad Sy = 4.414\ in^3$

$Sz := \dfrac{Iz}{\frac{1}{2}\cdot Dy}$ $\quad Sz = 4.414\ in^3$

Torsional constant / distance, $JoR := 2\cdot t\cdot(Dztor - t)\cdot(Dytor - t)$ $\quad JoR = 7.031\ in^3$

Radii of gypration, $ry := \sqrt{\dfrac{Iy}{A}}$ $\quad ry = 1.534\ in$

$rz := \sqrt{\dfrac{Iz}{A}}$ $\quad rz = 1.534\ in$

Fixity coefficient, $K := 0.8$ *(Ref. Structural Engineering Handbook, 4th Edition, Figure 5, p.8-10)*
(Both ends supported)

Slenderness ratios, $SRy := \dfrac{K\cdot L}{ry}$ $\quad SRy = 18.572$

$SRz := \dfrac{K\cdot L}{rz}$ $\quad SRz = 18.572$

Constants depending upon the mechanical properties of the material from Ref. Structural Engineering Handbook, 4th Edition, Formulas 5a-c, p.11-6:

$$Bc := fcy\cdot\left[1 + \left(\frac{fcy}{2250000\cdot psi}\right)^{\frac{1}{2}}\right] \qquad Bc = 66072\ psi$$

$$Dc := \frac{Bc}{10}\cdot\left(\frac{Bc}{Ec}\right)^{\frac{1}{2}} \qquad Dc = 519\ psi$$

$$Cc := 0.41\cdot\frac{2\cdot Bc}{3\cdot Dc} \qquad Cc = 34.784$$

Compression allowables:

$$Fcy := \begin{cases} Bc - Dc \cdot SRy & \text{if } SRy \le Cc \\ Ec \cdot \left(\frac{\pi}{SRy}\right)^2 & \text{otherwise} \end{cases} \qquad Fcy = 56430\,psi$$

$$Fcz := \begin{cases} Bc - Dc \cdot SRz & \text{if } SRz \le Cc \\ Ec \cdot \left(\frac{\pi}{SRz}\right)^2 & \text{otherwise} \end{cases} \qquad Fcz = 56430\,psi$$

Ref. Structural Engineering Handbook, 4th Edition, p.11-25, defines:

$$Fey := \frac{102000000 \cdot psi}{FS \cdot SRy^2} \qquad Fey = 211220\,psi$$

$$Fez := \frac{102000000 \cdot psi}{FS \cdot SRz^2} \qquad Fez = 211220\,psi$$

Ultimate shear allowables:

$$Vulty := fsu \cdot \frac{Iz \cdot b}{Qz} \qquad Vulty = 61839\,lbf$$

$$Vultz := fsu \cdot \frac{Iy \cdot b}{Qy} \qquad Vultz = 61839\,lbf$$

Ultimate torsion allowable:

$$Tult := fsu \cdot JoR \qquad Tult = 260156\,in \cdot lbf$$

Axial tensile allowable:

$$Pt := ftu \cdot A \qquad Pt = 255000\,lbf$$

Axial compression allowable:

$$Pcr := \begin{cases} Fcz \cdot A & \text{if } Fcy \ge Fcz \\ Fcy \cdot A & \text{otherwise} \end{cases} \qquad Pcr = 211611\,lbf$$

Ultimate bending allowables:

$$Multy := Sy \cdot [ftu + (f - 1) \cdot fty] \qquad Multy = 355504\,in \cdot lbf$$

$$Multz := Sz \cdot [ftu + (f - 1) \cdot fty] \qquad Multz = 355504\,in \cdot lbf$$

Combined bending and axial allowables:

$$Pey := Fey \cdot A \qquad Pey = 792076\,lbf$$

$$Pez := Fez \cdot A \qquad Pez = 792076\,lbf$$

NASPOST was used to list all element loads of Lower Angle Beams in the file named "emc.lis". The file is located at /hsm/phoang/ams2/uss/bklg. Input for NASPOST was taken from 192 punch files in three different folders:

/hsm/bsommer/ams/nonlin/1000/2-04
/hsm/bsommer/ams/nonlin/2000/2-04
/hsm/bsommer/ams/nonlin/4000/2-04

File "emc.txt" was generated from "emc.lis" by removing all texts and comments.
MathCAD will read in all datum from "emc.txt" for the calculation below.

$load := READPRN("emc.txt")$ $\qquad i := 1 .. rows(load)$

Element ID: $ID := load^{\langle 1 \rangle}$ $\qquad$ Load case number: $LC := load^{\langle 2 \rangle}$

+ At end A of beam element:

Moment: $M1a := load^{\langle 3 \rangle} \cdot in \cdot lbf$ $\qquad M2a := load^{\langle 4 \rangle} \cdot in \cdot lbf$

Shear force: $V1a := load^{\langle 5 \rangle} \cdot lbf$ $\qquad V2a := load^{\langle 6 \rangle} \cdot lbf$

Axial force: $Pa := load^{\langle 7 \rangle} \cdot lbf$

Total torque: $Toa := load^{\langle 8 \rangle} \cdot in \cdot lbf$

Warp torque: $Warpa := load^{\langle 9 \rangle} \cdot in \cdot lbf$

+ At end B of beam element:

Moment: $M1b := load^{\langle 10 \rangle} \cdot in \cdot lbf$ $\qquad M2b := load^{\langle 11 \rangle} \cdot in \cdot lbf$

Shear force: $V1b := load^{\langle 12 \rangle} \cdot lbf$ $\qquad V2b := load^{\langle 13 \rangle} \cdot lbf$

Axial force: $Pb := load^{\langle 14 \rangle} \cdot lbf$

Total torque: $Tob := load^{\langle 15 \rangle} \cdot in \cdot lbf$

Warp torque: $Warpb := load^{\langle 16 \rangle} \cdot in \cdot lbf$

Modify end torque by subtracting warping torque:

$$Ta_i := \left|Toa_i\right| - \left|Warpa_i\right|$$

$$Tb_i := \left|Tob_i\right| - \left|Warpb_i\right|$$

Shear ratios:

$$RSa_i := \frac{\left|V1a_i\right|}{Vulty} + \frac{\left|V2a_i\right|}{Vultz} + \frac{Ta_i}{Tult}$$

$$RSb_i := \frac{\left|V1b_i\right|}{Vulty} + \frac{\left|V2b_i\right|}{Vultz} + \frac{Tb_i}{Tult}$$

Tensile ratio at end A:

$$RTa_i := \begin{cases} \dfrac{\left|Pa_i\right|}{Pt} + \dfrac{\left|M2a_i\right|}{Multy} + \dfrac{\left|M1a_i\right|}{Multz} & \text{if } Pa_i \ge 0\cdot lbf \\ \dfrac{\left|Pa_i\right|}{Pcr} + \dfrac{\left|M2a_i\right|}{Multy}\cdot\dfrac{1}{1-\dfrac{\left|Pa_i\right|}{Pey}} + \dfrac{\left|M1a_i\right|}{Multz}\cdot\dfrac{1}{1-\dfrac{\left|Pa_i\right|}{Pez}} & \text{otherwise} \end{cases}$$

Tensile ratio at end B:

$$RTb_i := \begin{cases} \dfrac{\left|Pb_i\right|}{Pt} + \dfrac{\left|M2b_i\right|}{Multy} + \dfrac{\left|M1b_i\right|}{Multz} & \text{if } Pb_i \ge 0\cdot lbf \\ \dfrac{\left|Pb_i\right|}{Pcr} + \dfrac{\left|M2b_i\right|}{Multy}\cdot\dfrac{1}{1-\dfrac{\left|Pb_i\right|}{Pey}} + \dfrac{\left|M1b_i\right|}{Multz}\cdot\dfrac{1}{1-\dfrac{\left|Pb_i\right|}{Pez}} & \text{otherwise} \end{cases}$$

Combined Ratios:

$$RATIOa_i := \sqrt{\left(RTa_i\right)^2 + \left(RSa_i\right)^2}$$

$$RATIOb_i := \sqrt{\left(RTb_i\right)^2 + \left(RSb_i\right)^2}$$

$$RATIO_i := \text{if}\left(RATIOa_i \ge RATIOb_i, RATIOa_i, RATIOb_i\right)$$

Margin of Safety:

$$MS_i := \frac{1}{RATIO_i\cdot FS} - 1$$

$\min(MS) = 1.76$

Reference

The worst load case that yielded minimum margin of safety is shown below:

$$\text{output} := \text{augment}(\text{ID}, \text{LC}, \text{MS}) \qquad \text{sorted} := \text{csort}(\text{output}, 3)$$

$$\left(\text{sorted}^{T}\right)^{\langle 1 \rangle^{T}} = (1513 \quad 1024 \quad 1.76)$$

Based upon the output of submatrix function above, it reads:

Element ID = 1513

Load ID = 1024

MS = 1.76

2.2.4 Lower USS to Upper USS Joint

Margins of Safety

Table 2.2.4-1: Minimum Margin of Safety Summary

Part / Dwg Number	Part Name / Description	Material & Heat Treatment	Critical Load Condition	Failure Mode	Margin of Safety	Reference Page
SDG39135762	Lower USS-02 to Upper USS-02 Joint	AL ALY 7050-T7451	Launch	Max Prin. Stress	1.15 (u)	2.2.4-16

Notes:

1. Factors of Safety are 1.4 for Ultimate and 1.1 for Yield.
2. Boundary conditions are at five Trunnion locations.
3. 128 load cases for Launch and Abort Landing are applied.
4. u = ultimate, y = yield

Factors of Safety

The hardware is designed with a yield factor of 1.1 and an ultimate factor of 1.4 against limit loads for Launch and Abort Landing.

Description of Structure

Figure 2.2.4-1 below shows the locations of four AMS-02 Lower USS to Upper USS Joints in loads model 2-06. The Joints were machined out of 7050-T7451 Aluminum Alloy plate. One end of the Joint is riveted to the Lower Angle Beam. The other end is bolted to the Lower Vacuum Case Joint.

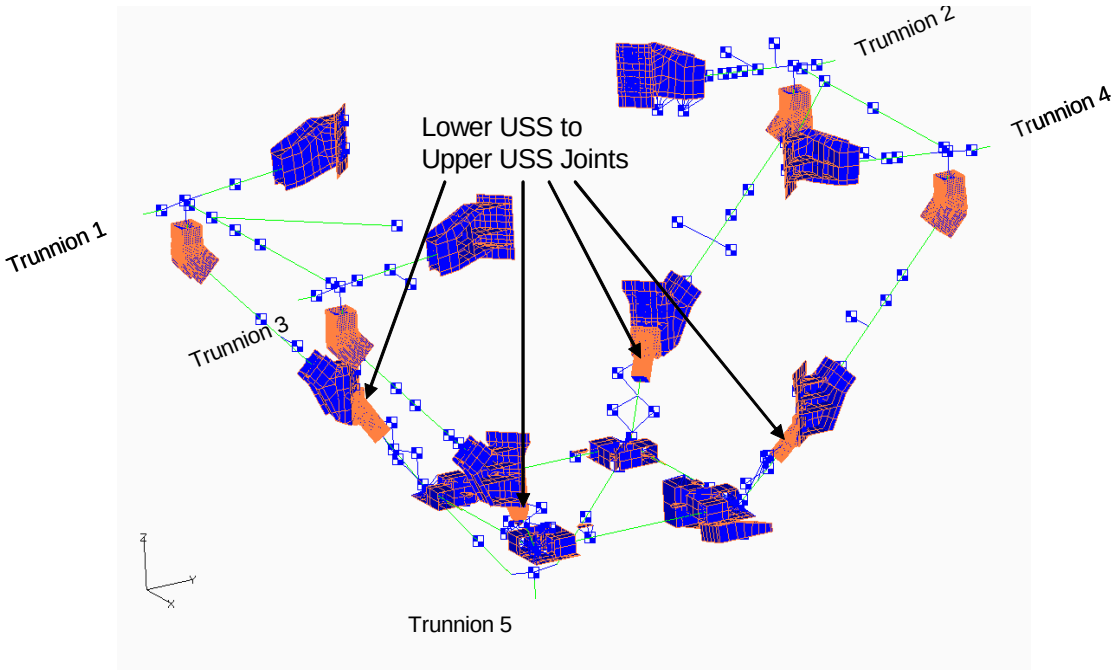

Figure 2.2.4-1 : Location of AMS-02 Lower USS to Upper USS Joints in Loads Model 2-06

* Note that the above figure does not show Vacuum Case for clarity.

Description of Model

A FEM model was built for four Lower USS to Upper USS joints using FEMAP.

1. Joints were modeled as CHEXA, CPENTA, and CQUAD4 elements. The CHEXA and CPENTA elements represent the solid section and flat plate. The CQUAD4 elements represent the square tube cross-section.
2. RSSCON elements were used to attach the CQUAD4 elements to the CHEXA elements.
3. RBE3 elements were used in the corners of the attachments between CQUAD4 elements and CHEXA elements.
4. At the bolt holes, RBE2 rigid elements with DOF's 1, 2, & 3 are represented.
5. The interface between the Lower USS to Upper USS joint and the Lower Vacuum Case joint are represented by RBE2 rigid elements with DOF's 1.
6. At the shear pin hole, RBE2 rigid elements with DOF's 2 & 3 are represented.
7. Each row of rivets is represented by a single RBE2 rigid element with DOF's 1, 2, & 3.
8. The interfaces of the Lower USS to Upper USS Joints and Lower Angle Beams are represented by RBE2 rigid elements with DOF's 1, 2, & 3.
9. CBEAM elements were modeled to represent the Lower Angle Beams.

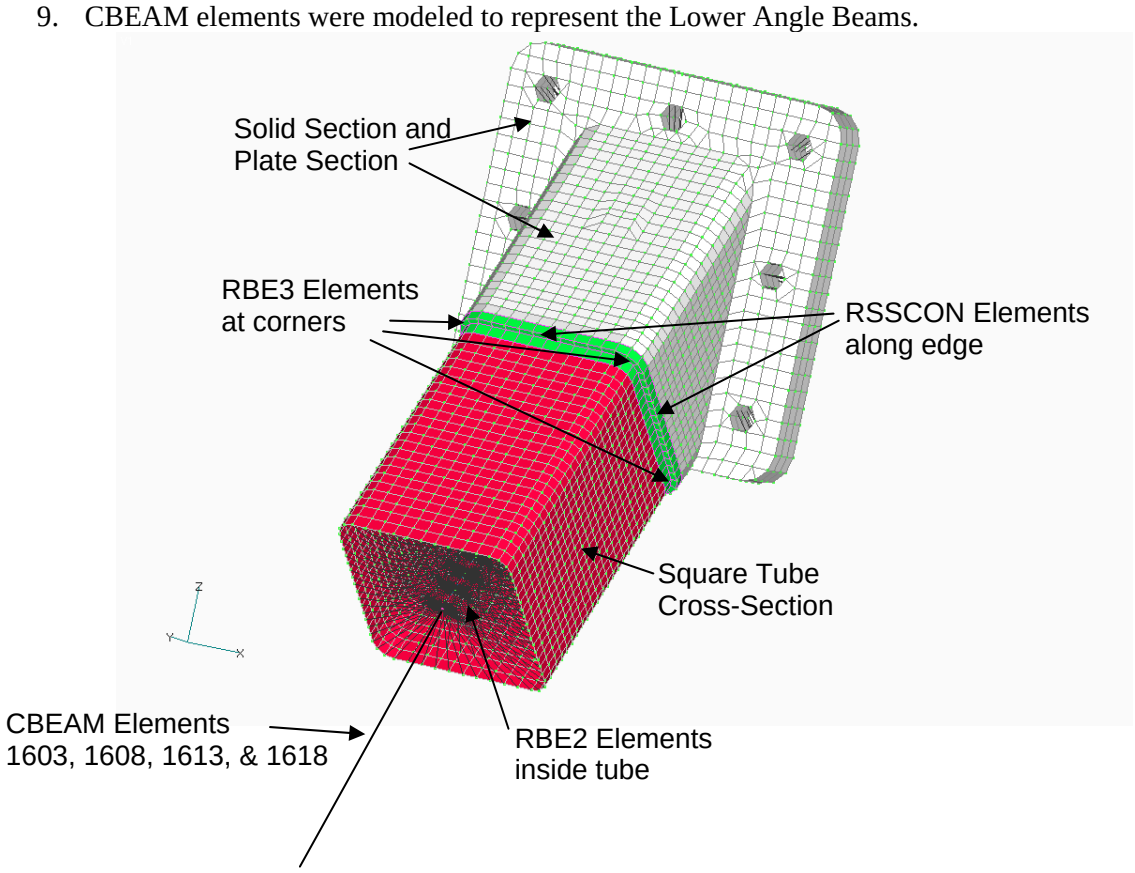

Figure 2.2.4-2 : View 1 - FEMAP Model of Lower USS to Upper USS Joint

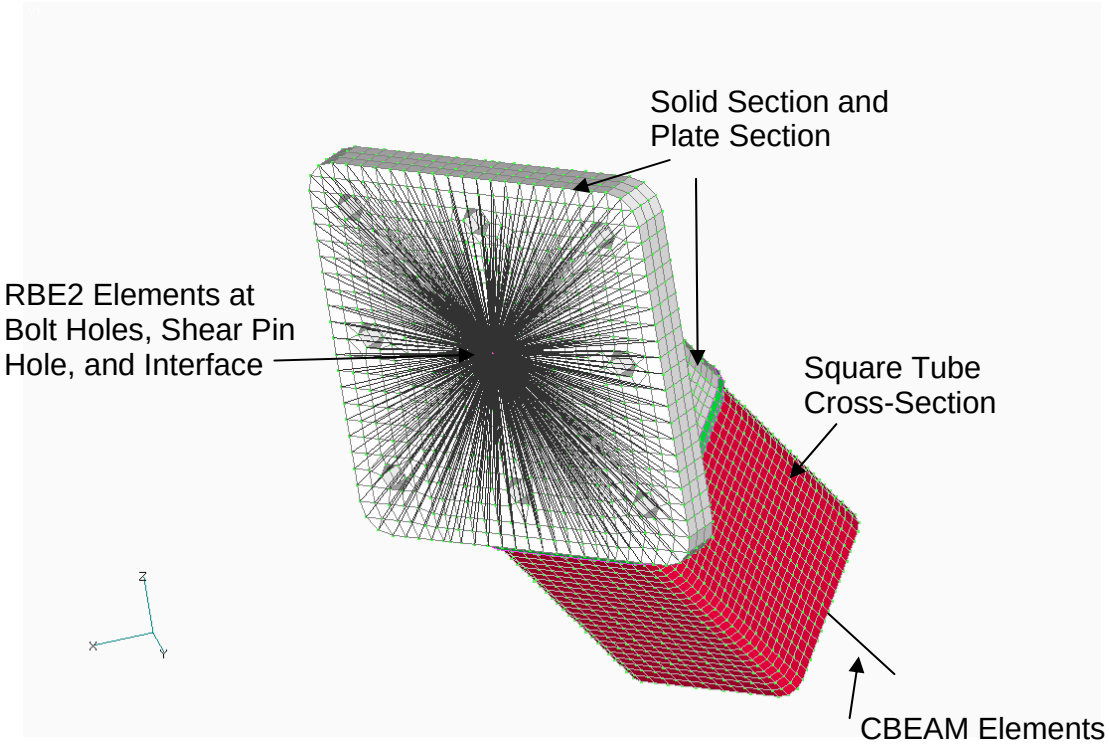

Figure 2.2.4-3 : View 2- FEMAP Model of Lower USS to Upper USS Joint

The model was then constrained with DOF's 1&3 at Trunnion 1&2 (see Figure 2.2.4-1), with DOF's 3 at Trunnion 3&4, and with DOF's 2 at Trunnion 5.

A total of 128 load cases for Launch and Abort Landing were applied.
MSC/NASTRAN v.2005 was used as a solver for analyzing the complete math model of AMS-02 version 2-06.

Due to the small geometry and the amount of rigid constraints on each end of the joint, hand calculations are performed for the square tube cross-section and flat plate section. Beam and CBUSH loads were recovered and used in the hand calculations.

Table below shows detail of model inputs.

Table 2.2.4-2 – Inputs of Finite Element Model of Lower USS to Upper USS Joints

Description	Node #	Element #					
		CHEXA/CPENTA	CQUAD4	CBEAM	RSSCON	RBE2	RBE3
Joint 1	14200001 - 14208002	14200001 - 14205488	14207001 - 14208488	14209101 - 14209112, 1613	14209001 - 14209062	14209148 - 14209162	14209163 - 14209170
Joint 2	14210001 - 14218002	14210001 - 14215488	14217001 - 14218488	14219101 - 14219112, 1603	14219001 - 14219062	14219148 - 14219162	14219163 - 14219170
Joint 3	14220001 - 14228002	14220001 - 14225488	14227001 - 14228488	14229101 - 14229112, 1608	14229001 - 14229062	14229148 - 14229162	14229163 - 14229170
Joint 4	14230001 - 14238002	14230001 - 14235488	14237001 - 14238488	14239101 - 14239112, 1618	14239001 - 14239062	14239148 - 14239162	14239163 - 14239170

The CBEAM elements have property ID 1040 and material ID 1006. The CQUAD4 elements have property ID 14200001 and material ID 14200001. The CHEXA and CPENTA elements have property ID 14200002 and material ID 14200001.

Model Checks

Rigid body checks were performed using MSC/NASTRAN. Results are shown below for the USS detail model. The KGG, KNN and KFF matrices all pass with low strain energies. Reference file, checkams-v1.f06, for additional information.

```
 *** USER INFORMATION MESSAGE 7570 (GPWG1D)
     RESULTS OF RIGID BODY CHECKS OF MATRIX KGG   (G-SET)  FOLLOW:
     PRINT RESULTS IN ALL SIX DIRECTIONS AGAINST THE LIMIT OF 1.000E-02
           DIRECTION        STRAIN ENERGY        PASS/FAIL
           ---------        -------------        ---------
             1               1.367707E-06          PASS
             2               6.774038E-07          PASS
             3               3.557411E-06          PASS
             4               4.438838E-03          PASS
             5               4.103632E-03          PASS
             6               5.481726E-04          PASS
```

```
*** USER INFORMATION MESSAGE 7570 (GPWG1D)
    RESULTS OF RIGID BODY CHECKS OF MATRIX KNN  (N-SET)  FOLLOW:
    PRINT RESULTS IN ALL SIX DIRECTIONS AGAINST THE LIMIT OF 1.000E-02
           DIRECTION        STRAIN ENERGY        PASS/FAIL
           ---------        -------------        ---------
             1               1.824517E-06          PASS
             2               1.342224E-06          PASS
             3               2.343345E-06          PASS
             4               4.275563E-04          PASS
             5               2.288010E-03          PASS
             6               8.717927E-03          PASS
```

```
*** USER INFORMATION MESSAGE 7570 (GPWG1D)
    RESULTS OF RIGID BODY CHECKS OF MATRIX KFF (F-SET)  FOLLOW:
    PRINT RESULTS IN ALL SIX DIRECTIONS AGAINST THE LIMIT OF 1.000E-02
           DIRECTION        STRAIN ENERGY        PASS/FAIL
           ---------        -------------        ---------
             1               1.824517E-06          PASS
             2               1.342224E-06          PASS
             3               2.343345E-06          PASS
             4               4.275563E-04          PASS
             5               2.288010E-03          PASS
             6               8.717927E-03          PASS
```

```
*** USER INFORMATION MESSAGE 7570 (GPWG1D)
    RESULTS OF RIGID BODY CHECKS OF MATRIX KAA1(A-SET)  FOLLOW:
    PRINT RESULTS IN ALL SIX DIRECTIONS AGAINST THE LIMIT OF 1.000E-02
           DIRECTION        STRAIN ENERGY        PASS/FAIL
           ---------        -------------        ---------
             1               1.824517E-06          PASS
             2               1.342224E-06          PASS
             3               2.343345E-06          PASS
             4               4.275563E-04          PASS
             5               2.288010E-03          PASS
             6               8.717927E-03          PASS
```

A further check is that of rigid body modes. The first 10 unconstrained modes are shown below. There are six rigid body modes (~ 0.0), and then good separation with the first non-rigid body mode.

Table 2.2.4-3 : Eigenvalue Summary of Lower USS to Upper USS Joint Detail Model

REAL EIGENVALUES						
MODE NO.	**EXTRACTION ORDER**	**EIGENVALUE**	**RADIANS**	**CYCLES**	**GENERALIZED MASS**	**GENERALIZED STIFFNESS**
1	1	4.12E-08	2.03E-04	3.23E-05	1.00E+00	4.12E-08
2	2	2.23E-07	4.73E-04	7.52E-05	1.00E+00	2.23E-07
3	3	2.92E-07	5.40E-04	8.60E-05	1.00E+00	2.92E-07
4	4	9.49E-07	9.74E-04	1.55E-04	1.00E+00	9.49E-07
5	5	1.28E-06	1.13E-03	1.80E-04	1.00E+00	1.28E-06
6	6	2.13E-06	1.46E-03	2.32E-04	1.00E+00	2.13E-06
7	7	6.90E+02	2.63E+01	4.18E+00	1.00E+00	6.90E+02
8	8	1.03E+03	3.21E+01	5.10E+00	1.00E+00	1.03E+03
9	9	1.03E+03	3.22E+01	5.12E+00	1.00E+00	1.03E+03
10	10	1.12E+03	3.35E+01	5.32E+00	1.00E+00	1.12E+03

Additional checks are comparisons of the strap loads and trunnion loads between the 2-06 loads model and the detail model. Loads in both models are closely matched.

The table below shows the top 20 strap load differences between the 2-06 loads model and the detailed model for the Lower USS to Upper USS Joint and the Bridge Beam Elbow Joints. The loads from both models are normalized by dividing by the highest load in the 2-06 loads model. A percent difference is then taken from these normalized loads. See Appendix A17 for more information on the strap load comparison. The NASPOST output files for the 2-06 loads model and detail model are strapforcescase.lis and strapforces_detail.lis, respectively.

Table 2.2.4-4 : Strap Load Differences (lbf) between Two Models

Element ID#	Load Case	2-06 Loads Model	Detail Model	Percent Difference
90006	2013	1.000	0.995	0.486
90006	2009	0.997	0.992	0.435
90014	2048	0.984	0.984	0.039
90014	2044	0.982	0.987	0.444
90002	2026	0.976	0.975	0.136
90010	2059	0.975	0.976	0.089
90010	2063	0.961	0.959	0.176
90002	2030	0.958	0.949	0.931
90011	1002	0.943	0.932	1.167
90015	1021	0.942	0.963	2.263
90013	1027	0.926	0.932	0.653
90013	1025	0.925	0.924	0.179
90009	1014	0.921	0.898	2.573
90009	1016	0.906	0.905	0.207
90010	2060	0.898	0.901	0.396
90006	2014	0.893	0.895	0.244
90014	2047	0.885	0.885	0.024
90002	2025	0.881	0.881	0.006
90006	2010	0.878	0.876	0.172
90005	2060	0.878	0.877	0.063

The table below shows the top 20 trunnion load differences between the 2-06 loads model and the detailed model for the Lower USS to Upper USS Joint and the Bridge Beam Elbow Joints. The loads from both models are normalized by dividing by the highest load in the 2-06 loads model. A percent difference is then taken from these normalized loads. See Appendix A17 for more information on the trunnion load comparison. The NASPOST output files for the 2-06 loads model and detail model are trunnionforces.lis and trunnionforces_detail.lis, respectively.

Table 2.2.4-5 : Trunnion Load Differences (lbf) between Two Models

Element ID#	Load Case	2-06 Loads Model	Detail Model	Percent Difference
1	1016	1.000	0.995	0.500
1	2016	0.967	0.967	0.025
1	1012	0.955	0.955	0.028
1	2015	0.954	0.954	0.048
1	1015	0.949	0.955	0.589
1	1011	0.912	0.907	0.564
1	2012	0.911	0.910	0.061
1	2011	0.896	0.895	0.080
1	2047	0.863	0.862	0.173
1	1032	0.860	0.857	0.323
1	1014	0.853	0.856	0.352
1	1028	0.833	0.836	0.371
1	2032	0.830	0.828	0.180
1	2048	0.823	0.824	0.141
1	1010	0.818	0.815	0.285
1	2043	0.817	0.815	0.196
1	1008	0.812	0.814	0.188
4	2057	0.812	0.810	0.139
4	2058	0.808	0.806	0.262
1	2031	0.804	0.804	0.084

Material and Temperature

The Lower USS to Upper USS Joints are 7050-T7451 aluminum alloy. Material properties of 7050-T7451 are taken from Boeing Material Specification of BMS 7-323C, and MIL-HDBK-5H. Temperature limits at the interface of Lower USS to Upper USS are provided by the Thermal Analysis Group . See Appendix C2 for temperature data. For Launch condition, the temperature of 120°F is applied. For Abort Landing condition, the temperature of 150°F is applied.

Analysis

Due to the small geometry and the amount of rigid constraints on each end of the joint, hand calculations are performed for the square tube cross-section and flat plate section. Beam and CBUSH loads were recovered and used in the hand calculations.

Prepared By	Name	Date		File Name
	Brent Dyer	03/09/06		lwupuss.mcd
Checked By	C. Bala		**Engineering and Science Contract Group** *Structural Analysis Section*	Drawing No. SDG39135762
Title	**Lower USS-02 to Upper USS-02 Joint**			

Geometry and Cross Sectional Properties:

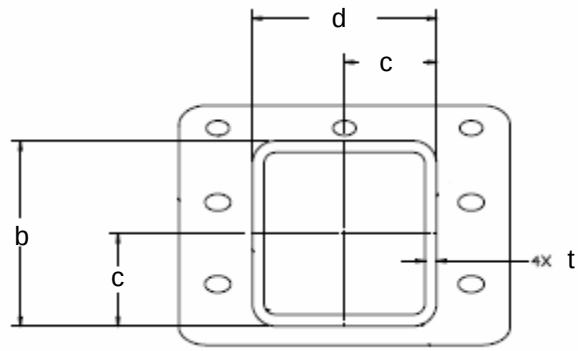

Tube Section 4X4X.25:

$b := 4.0 \cdot in$ Height of Tube

$d := 4.0 \cdot in$ Width of Tube

$t := .250 \cdot in$ Wall Thickness of Tube

Portion	b	d	Area, A	z	Az	Az^2	Icy	Iy'
1	4.0000	0.2500	1.0000	3.8750	3.8750	15.0156	0.0052	15.0208
2	0.2500	3.5000	0.8750	2.0000	1.7500	3.5000	0.8932	4.3932
3	4.0000	0.2500	1.0000	0.1250	0.1250	0.0156	0.0052	0.0208
4	0.2500	3.5000	0.8750	2.0000	1.7500	3.5000	0.8932	4.3932
Sum		**A=**	**3.750**		7.5000			23.8281
		z_bar=	**2.000**					
		Iyy=	**8.828**					

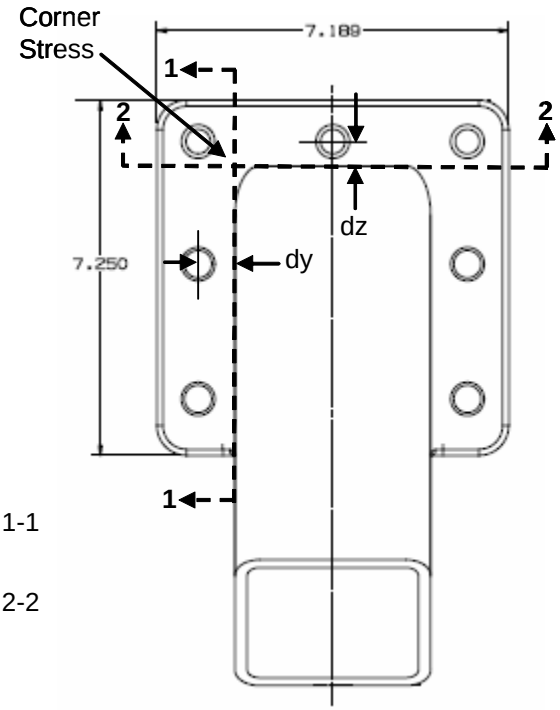

$Area := 3.75 \cdot in^2$ Area

$Int := 8.828 \cdot in^4$ Moment of Interia

$c := 2.0 \cdot in$ Distance of outer extreme fiber for square tube section

Plate Section:

$h := 7.250 \cdot in$ Height of plate

$k := 7.189 \cdot in$ Width of plate

$thick := .750 \cdot in$ Thickness of Plate

$A1 := h \cdot thick$ $\quad A1 = 5.437\ in^2$ Area along cross section 1-1

$A2 := k \cdot thick$ $\quad A2 = 5.392\ in^2$ Area along cross section 2-2

Moments of Interia for cross sections 1-1 and 2-2:

$Iz1 := \frac{h \cdot thick^3}{12}$ $\quad Iz1 = 0.255\ in^4$ $\quad Iy2 := \frac{k \cdot thick^3}{12}$ $\quad Iy2 = 0.253\ in^4$

$Iy1 := \frac{thick \cdot h^3}{12}$ $\quad Iy1 = 23.817\ in^4$ $\quad Ix1 := \frac{thick \cdot k^3}{12}$ $\quad Ix1 = 23.221\ in^4$

Factor of Safety, Material Properties, and Temperature Data:

Material Properties : 7050-T7451 AL ALY, BMS 7-323C or AMS 4050 *(Boeing Material Specification, BMS 7-323C, Table 1 & MIL-HDBK-5H, Table 3.7.3.0(b_1) for thickness of 5.001"-6.000")*

$F_{tu} := 66000 \cdot psi$

$F_{ty} := 57000 \cdot psi$

$F_{su} := 43000 \cdot psi$

Factors of Safety, $FSu := 1.4$ $FSy := 1.1$

Temperature reduction factors, *(Ref. MIL-HDBK-5H, Figure 3.7.3.2.1)*

+ At 120°F for Launch condition:

- Ultimate: $\gamma_{u1} := 0.95$
- Yield: $\gamma_{y1} := 0.99$

+ At 150°F for Abort Landing condition:

$\gamma_{u2} := 0.91$

$\gamma_{y2} := 0.97$

Allowable stresses:

+ For Launch condition:

$F_{tu1.a} := \gamma_{u1} \cdot F_{tu}$

$F_{tu1.a} = 62700\ psi$

$F_{ty1.a} := \gamma_{y1} \cdot F_{ty}$

$F_{ty1.a} = 56430\ psi$

$F_{su1.a} := \gamma_{u1} \cdot F_{su}$

$F_{su1.a} = 40850\ psi$

+ For Landing condition:

$F_{tu2.a} := \gamma_{u2} \cdot F_{tu}$

$F_{tu2.a} = 60060\ psi$

$F_{ty2.a} := \gamma_{y2} \cdot F_{ty}$

$F_{ty2.a} = 55290\ psi$

$F_{su2.a} := \gamma_{u2} \cdot F_{su}$

$F_{su2.a} = 39130\ psi$

Analysis of Square Tube Cross Section (Launch):

<u>Loads from 2-06 detailed loads model, launch case</u>

$load := READPRN("lab_1000.txt")$ $\quad i := 1 .. rows(load)$

Element ID: $ID := load^{\langle 1 \rangle}$ Load case number: $LC := load^{\langle 2 \rangle}$

+ At end A of beam element:

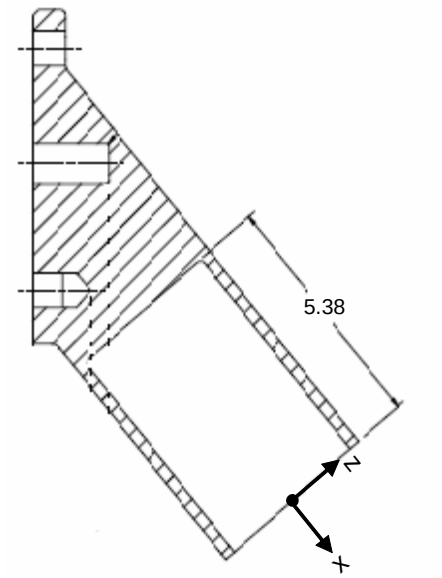

Moment: $Mya := load^{\langle 3 \rangle} \cdot in \cdot lbf$ $\quad Mza := load^{\langle 4 \rangle} \cdot in \cdot lbf$

Shear force: $Fy := load^{\langle 5 \rangle} \cdot lbf$ $\quad Fz := load^{\langle 6 \rangle} \cdot lbf$

Axial force: $Fx := load^{\langle 7 \rangle} \cdot lbf$ Total torque: $Tor := load^{\langle 8 \rangle} \cdot in \cdot lbf$

$Cant := 5.38 \cdot in$ Cantilevered Distance from Beam End

$Mya := Mya + Fz \cdot Cant$ Total Moment about y

$Mza := Mza + Fy \cdot Cant$ Total Moment about z

Analysis of Square Tube Cross Section (Launch):

Normal is direct axial plus bending: (Conservatively) *(Ref. Stress, Strain, And Structural Matrices, p. 764)*

$$\sigma_i := \left|\frac{Fx_i}{Area}\right| + \left|\frac{Mya_i}{Int}\cdot c\right| + \left|\frac{Mza_i}{Int}\cdot c\right| \qquad \max(\sigma) = 20021.8\ \text{psi}$$

(This σ_i gives the least MS)

Since the normal and shear stresses are not applied at the same location, the simplified calculation for the combined shear stress is as follows:

Shear due to transverse loading $$\tau v_i := \sqrt{\left(\frac{Fy_i}{Area}\right)^2 + \left(\frac{Fz_i}{Area}\right)^2} \qquad \max(\tau v) = 1807.1\ \text{psi}$$

Shear due to torsion (conservatively): $$\tau t_i := \frac{Tor_i}{2\cdot t\cdot(b-t)\cdot(d-t)} \qquad \max(\tau t) = 2669.2\ \text{psi}$$

Combined shear: $$\tau_i := \tau v_i + \tau t_i \qquad \max(\tau) = 4168\ \text{psi}$$

Principal Stresses: $$\sigma p_{i,1} := \frac{\sigma_i}{2} + \left[\left(\frac{\sigma_i}{2}\right)^2 + (\tau_i)^2\right]^{\frac{1}{2}} \qquad \max(\sigma p) = 20854.8\ \text{psi}$$

$$\sigma p_{i,2} := \frac{\sigma_i}{2} - \left[\left(\frac{\sigma_i}{2}\right)^2 + (\tau_i)^2\right]^{\frac{1}{2}} \qquad \min(\sigma p) = -1362\ \text{psi}$$

Maximum principal stress is:

$$\sigma max_i := \begin{cases} |\sigma p_{i,1}| & \text{if } |\sigma p_{i,1}| \ge |\sigma p_{i,2}| \\ |\sigma p_{i,2}| & \text{otherwise} \end{cases}$$

Von-Mises Stress: $$\sigma vm_i := \sqrt{(\sigma p_{i,1})^2 + (\sigma p_{i,2})^2 - \sigma p_{i,1}\cdot\sigma p_{i,2}} \qquad \max(\sigma vm) = 21283.5\ \text{psi}$$

Maximum shear: $$\tau max_i := \sqrt{\frac{1}{4}\cdot(\sigma_i)^2 + (\tau_i)^2} \qquad \max(\tau max) = 10843.9\ \text{psi}$$

Margins of safety for Square Tube Cross Section (Launch):

Ultimate

$$MSu_i := \begin{cases} \left(\dfrac{F_{tu1.a}}{FSu \cdot \sigma max_i}\right) - 1 & \text{if } \sigma max_i \neq 0 \cdot psi \\ 10000 & \text{otherwise} \end{cases}$$

$min(MSu) = 1.15$

$$output1 := augment\left(ID, LC, MSu, \frac{Mya}{in \cdot lbf}, \frac{Mza}{in \cdot lbf}, \frac{Fy}{lbf}, \frac{Fz}{lbf}, \frac{Fx}{lbf}\right)$$

$sorted := csort(output1, 3)$

$$\left(sorted^T\right)^{\langle 1 \rangle^T} = (1608 \quad 1028 \quad 1.15 \quad -51065.76 \quad -12014.9 \quad 940.8 \quad -5541.2 \quad 21490.3)$$

The minimum margin of safety of 1.15 occurs on element ID 1608 and load case 1028 along with the following moments and forces: (Mya) -51065.76, (Mza) -12014.9, (Fy) 940.8, (Fz) -5541.2, and (Fx) 21490.3.

Ultimate, shear

$$MSsu_i := \begin{cases} \left(\dfrac{F_{su1.a}}{FSu \cdot \tau max_i}\right) - 1 & \text{if } \tau max_i \neq 0 \cdot psi \\ 10000 & \text{otherwise} \end{cases}$$

$min(MSsu) = 1.69$

$$output2 := augment\left(ID, LC, MSsu, \frac{Mya}{in \cdot lbf}, \frac{Mza}{in \cdot lbf}, \frac{Fy}{lbf}, \frac{Fz}{lbf}, \frac{Fx}{lbf}\right)$$

$sorted := csort(output2, 3)$

$$\left(sorted^T\right)^{\langle 1 \rangle^T} = (1608 \quad 1028 \quad 1.69 \quad -51065.76 \quad -12014.9 \quad 940.8 \quad -5541.2 \quad 21490.3)$$

Yield
(using von-Mises)

$$MSy_i := \begin{cases} \left(\dfrac{F_{ty1.a}}{FSy \cdot \sigma vm_i}\right) - 1 & \text{if } \sigma vm_i \neq 0 \cdot psi \\ 10000 & \text{otherwise} \end{cases}$$

$min(MSy) = 1.41$

$$output3 := augment\left(ID, LC, MSy, \frac{Mya}{in \cdot lbf}, \frac{Mza}{in \cdot lbf}, \frac{Fy}{lbf}, \frac{Fz}{lbf}, \frac{Fx}{lbf}\right)$$

$sorted := csort(output3, 3)$

$$\left(sorted^T\right)^{\langle 1 \rangle^T} = (1608 \quad 1028 \quad 1.41 \quad -51065.76 \quad -12014.9 \quad 940.8 \quad -5541.2 \quad 21490.3)$$

Prepared By	Name	Date		File Name
	Brent Dyer	03/09/06		lwupuss.mcd
Checked By	C. Bala		**Engineering and Science Contract Group** *Structural Analysis Section*	Drawing No. SDG39135762
Title	**Lower USS-02 to Upper USS-02 Joint**			

Analysis of Square Tube Cross Section (Abort Landing):

Loads from 2-06 detailed loads model, abort landing case

$load := READPRN("lab_2000.txt")$ $\quad i := 1 .. rows(load)$

Element ID: $ID := load^{\langle 1 \rangle}$ Load case number: $LC := load^{\langle 2 \rangle}$

+ At end A of beam element:

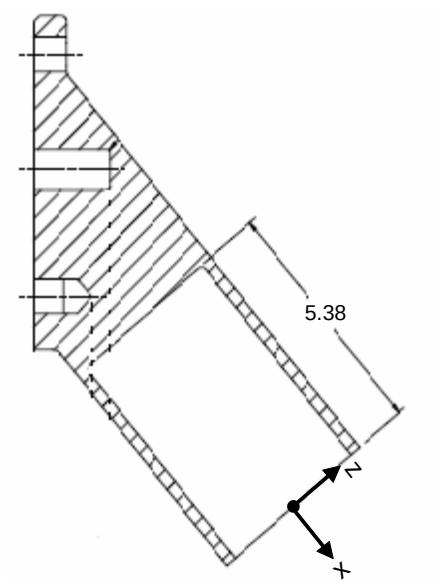

Moment: $Mya := load^{\langle 3 \rangle} \cdot in \cdot lbf$ $\quad Mza := load^{\langle 4 \rangle} \cdot in \cdot lbf$

Shear force: $Fy := load^{\langle 5 \rangle} \cdot lbf$ $\quad Fz := load^{\langle 6 \rangle} \cdot lbf$

Axial force: $Fx := load^{\langle 7 \rangle} \cdot lbf$ Total torque: $Tor := load^{\langle 8 \rangle} \cdot in \cdot lbf$

$Cant := 5.38 \cdot in$ Cantilevered Distance from Beam End

$Mya := Mya + Fz \cdot Cant$ Total Moment about y

$Mza := Mza + Fy \cdot Cant$ Total Moment about z

Analysis of Square Tube Cross Section (Abort Landing):

Normal is direct axial plus bending: (Conservatively) *(Ref. Stress, Strain, And Structural Matrices, p. 764)*

$$\sigma_i := \left|\frac{Fx_i}{Area}\right| + \left|\frac{Mya_i}{Int}\cdot c\right| + \left|\frac{Mza_i}{Int}\cdot c\right| \qquad \max(\sigma) = 18816.5\ \text{psi}$$

(This σ_i gives the least MS)

Since the normal and shear stresses are not applied at the same location, the simplified calculation for the combined shear stress is as follows:

Shear due to transverse loading

$$\tau v_i := \sqrt{\left(\frac{Fy_i}{Area}\right)^2 + \left(\frac{Fz_i}{Area}\right)^2} \qquad \max(\tau v) = 1633.8\ \text{psi}$$

Shear due to torsion (conservatively):

$$\tau t_i := \frac{Tor_i}{2\cdot t\cdot(b-t)\cdot(d-t)} \qquad \max(\tau t) = 2238.7\ \text{psi}$$

Combined shear:

$$\tau_i := \tau v_i + \tau t_i \qquad \max(\tau) = 3540.8\ \text{psi}$$

Principal Stresses:

$$\sigma p_{i,1} := \frac{\sigma_i}{2} + \left[\left(\frac{\sigma_i}{2}\right)^2 + \left(\tau_i\right)^2\right]^{\frac{1}{2}} \qquad \max(\sigma p) = 18823.1\ \text{psi}$$

$$\sigma p_{i,2} := \frac{\sigma_i}{2} - \left[\left(\frac{\sigma_i}{2}\right)^2 + \left(\tau_i\right)^2\right]^{\frac{1}{2}} \qquad \min(\sigma p) = -1070.1\ \text{psi}$$

Maximum principal stress is:

$$\sigma max_i := \begin{cases} \left|\sigma p_{i,1}\right| & \text{if } \left|\sigma p_{i,1}\right| \ge \left|\sigma p_{i,2}\right| \\ \left|\sigma p_{i,2}\right| & \text{otherwise} \end{cases}$$

Von-Mises Stress:

$$\sigma vm_i := \sqrt{\left(\sigma p_{i,1}\right)^2 + \left(\sigma p_{i,2}\right)^2 - \sigma p_{i,1}\cdot\sigma p_{i,2}} \qquad \max(\sigma vm) = 18826.4\ \text{psi}$$

Maximum shear:

$$\tau max_i := \sqrt{\frac{1}{4}\cdot\left(\sigma_i\right)^2 + \left(\tau_i\right)^2} \qquad \max(\tau max) = 9414.8\ \text{psi}$$

Margins of safety for Square Tube Cross Section (Abort Landing):

Ultimate

$$MSu_i := \begin{cases} \left(\dfrac{F_{tu1.a}}{FSu \cdot \sigma max_i}\right) - 1 & \text{if } \sigma max_i \neq 0 \cdot psi \\ 10000 & \text{otherwise} \end{cases}$$

$min(MSu) = 1.38$

$$output1 := augment\left(ID, LC, MSu, \frac{Mya}{in \cdot lbf}, \frac{Mza}{in \cdot lbf}, \frac{Fy}{lbf}, \frac{Fz}{lbf}, \frac{Fx}{lbf}\right)$$

$sorted := csort(output1, 3)$

$$\left(sorted^T\right)^{\langle 1 \rangle^T} = (1603 \quad 2015 \quad 1.38 \quad 6083.15 \quad 53499.69 \quad 3915.5 \quad 4712.5 \quad 19942)$$

The minimum margin of safety of 1.38 occurs on element ID 1603 and load case 2015 along with the following moments and forces: (Mya) 6083.2, (Mza) 53499.7, (Fy) 3915.5, (Fz) 4712.5, and (Fx) 19942.

Ultimate, shear

$$MSsu_i := \begin{cases} \left(\dfrac{F_{su1.a}}{FSu \cdot \tau max_i}\right) - 1 & \text{if } \tau max_i \neq 0 \cdot psi \\ 10000 & \text{otherwise} \end{cases}$$

$min(MSsu) = 2.1$

$$output2 := augment\left(ID, LC, MSsu, \frac{Mya}{in \cdot lbf}, \frac{Mza}{in \cdot lbf}, \frac{Fy}{lbf}, \frac{Fz}{lbf}, \frac{Fx}{lbf}\right)$$

$sorted := csort(output2, 3)$

$$\left(sorted^T\right)^{\langle 1 \rangle^T} = (1603 \quad 2015 \quad 2.1 \quad 6083.15 \quad 53499.69 \quad 3915.5 \quad 4712.5 \quad 19942)$$

Yield
(using von-Mises)

$$MSy_i := \begin{cases} \left(\dfrac{F_{ty1.a}}{FSy \cdot \sigma vm_i}\right) - 1 & \text{if } \sigma vm_i \neq 0 \cdot psi \\ 10000 & \text{otherwise} \end{cases}$$

$min(MSy) = 1.72$

$$output3 := augment\left(ID, LC, MSy, \frac{Mya}{in \cdot lbf}, \frac{Mza}{in \cdot lbf}, \frac{Fy}{lbf}, \frac{Fz}{lbf}, \frac{Fx}{lbf}\right)$$

$sorted := csort(output3, 3)$

$$\left(sorted^T\right)^{\langle 1 \rangle^T} = (1603 \quad 2015 \quad 1.72 \quad 6083.15 \quad 53499.69 \quad 3915.5 \quad 4712.5 \quad 19942)$$

Stress Analysis of Plate Section:

The loads on the cbush elements from the detailed loads model 2-06 are used to analyze the plate section. The Mz and My moments are coupled out in order to find the tensile stress in the side and top flange of the plate section. (cross section 1-1 and 2-2) The Mx moment is coupled out in order to find the shear stress in the side and top flange of the plate section. (cross section 1-1 and 2-2) See below.

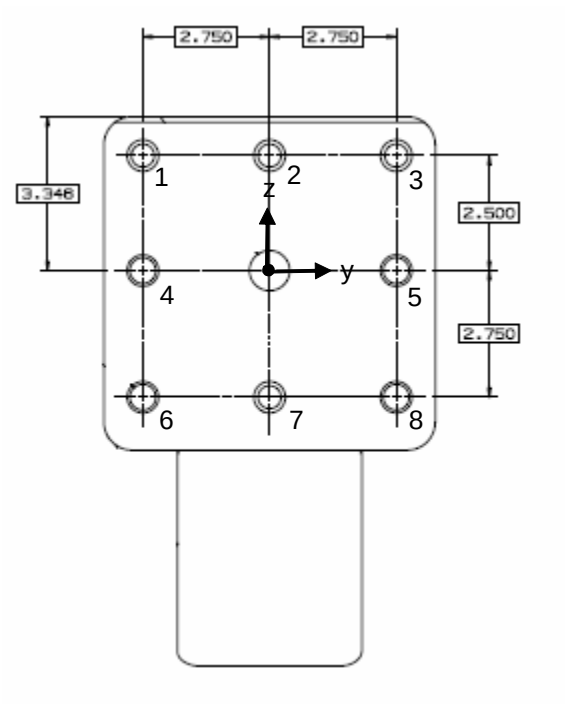

Figure 2.2.4 -1 Dimensions and Bolt Locations

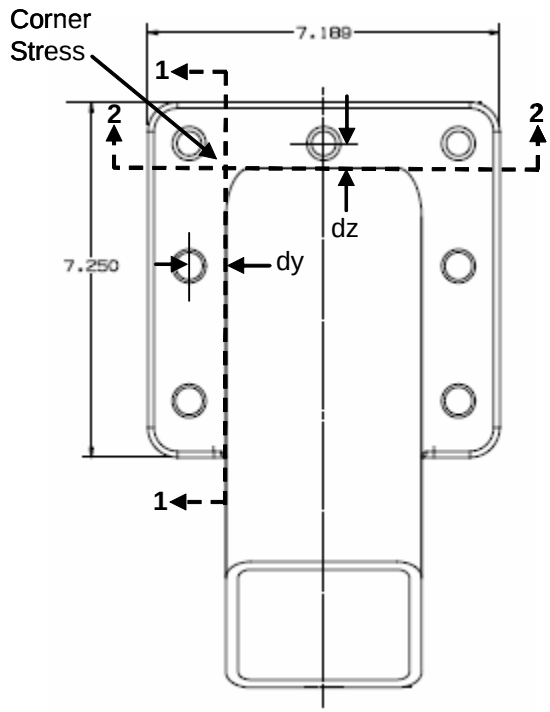

Figure 2.2.4 -2 Dimensions and Cross Section Locations

Basic Dimensions:

$$r := \begin{pmatrix} 0 \\ 2.75 \\ 2.5 \end{pmatrix} \cdot in$$

$r_2 = 2.75\,in$	Dimension along side flange from center of shear pin hole to centerline of bolt holes
$r_3 = 2.5\,in$	Dimension along top flange from shear pin hole to centerline of bolt holes
$dy := .750 \cdot in$	Dimension from center line of bolt holes along side flange to solid section (1-1)
$dz := .338 \cdot in$	Dimension from center line of bolt holes along top flange to solid section (2-2) (Ref. CAD Model)

Loads from 2-06 detailed loads model, launch case

$data := READPRN("cbush_launch.txt")$

$j := 1 .. rows(data)$

Axial Load	$Fx_j := data_{j,3} \cdot lbf$	Torsion	$Mx_j := data_{j,6} \cdot in \cdot lbf$
Shear in Y axis	$Fy_j := data_{j,4} \cdot lbf$	Moment about Y axis	$My_j := data_{j,7} \cdot in \cdot lbf$
Shear in Z axis	$Fz_j := data_{j,5} \cdot lbf$	Moment about Z axis	$Mz_j := data_{j,8} \cdot in \cdot lbf$
Element Identification	$ID_j := data_{j,1}$		
Load Case Number	$LC_j := data_{j,2}$		

$c2 := \frac{thick}{2}$ $\quad c2 = 0.375\ in$ Distance of outer extreme fiber for plate section

Tension Stress for Section 1-1 (Mz Couple)

$Fxnor_j := \frac{|Fx_j|}{4}$ Fx Normal Force (The number 4 represents the four quadrants on the plate. Bolt numbers 1, 4, and 6 form a quadrant of the plate. See figure 2.2.4 -1.)

$Fmz_j := \frac{|Mz_j|}{r_2 \cdot 2}$ Force due to Mz couple

$Ften1_j := Fxnor_j + Fmz_j$ $\quad max(Ften1) = 12389.3\ lbf$ Total Force

$Mz1_j := Ften1_j \cdot dy$ Total Mz moment on plate along solid section (cross section 1-1)

$\sigma z1_j := \frac{Mz1_j \cdot c2}{Iz1}$ $\quad max(\sigma z1) = 13671\ psi$ (Stress along solid section (cross section 1-1))

Tension Stress for Section 2-2 (My Couple)

$Fxnor_j := \frac{|Fx_j|}{4}$ Fx Normal Force (The number 4 represents the four quadrants on the plate. Bolt numbers 1, 2, and 3 form a quadrant of the plate. See figure 2.2.4 -1.)

$Fmy_j := \frac{|My_j|}{r_3 \cdot 2}$ Force due to My couple

$Ften2_j := Fxnor_j + Fmy_j$ $\max(Ften2) = 10231.3\ lbf$ Total Force

$My2_j := Ften2_j \cdot dz$ Total My moment on plate along solid section (cross section 2-2)

$\sigma y2_j := \frac{My2_j \cdot c2}{Iy2}$ $\max(\sigma y2) = 5131.1\ psi$ (Stress along solid section (cross section 2-2))

Combined Corner Tensile Stress

$\sigma yz_j := \sqrt{(\sigma z1_j)^2 + (\sigma y2_j)^2}$ $\max(\sigma yz) = 13981.7\ psi$

Shear Forces for Section 1-1 (Mx Couple)

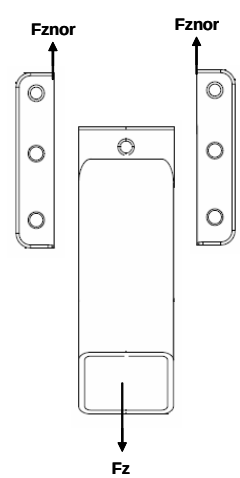

$Fznor_j := \frac{|Fz_j|}{2}$ Fz Normal Force (The two side flanges of the plate section shear along the solid section. See following picture.)

$Fmx1_j := \frac{|Mx_j|}{r_2 \cdot 2}$ Force due to Mx couple

$Fsh1_j := Fznor_j + Fmx1_j$ $\max(Fsh1) = 20275.5\ lbf$ Total Force

$\tau x1_j := \frac{Fsh1_j}{A1}$ $\max(\tau x1) = 3728.8\ psi$ (Stress along solid section (cross section 1-1))

Shear Forces for Section 2-2 (Mx Couple)

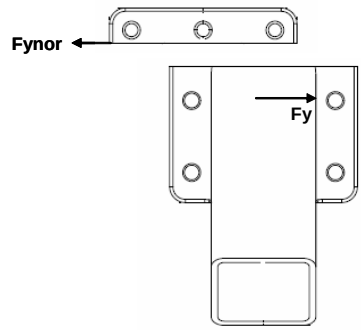

$Fynor_j := \left|Fy_j\right|$ Fy Normal Force (The top flange of the plate section shears along the top solid section. See following picture.)

$Fmx2_j := \dfrac{\left|Mx_j\right|}{r_3 \cdot 2}$ Force due to Mx couple

$Fsh2_j := Fynor_j + Fmx2_j$ $\max(Fsh2) = 18515.6\ \text{lbf}$ Total Force

$\tau x2_j := \dfrac{Fsh2_j}{A2}$ $\max(\tau x2) = 3434.1\ \text{psi}$ (Stress along solid section (cross section 1-1))

Combined Corner Shear Stress

$\tau x_j := \sqrt{\left(\tau x1_j\right)^2 + \left(\tau x2_j\right)^2}$ $\max(\tau x) = 5049\ \text{psi}$

Margins of Safety for Plate Section (Launch):

Tension Ultimate:

$MStenu_j := \dfrac{F_{tu1.a}}{FSu \cdot \sigma yz_j}$ $\min(MStenu) = 3.2$

Tension Yield:

$MSteny_j := \dfrac{F_{ty1.a}}{FSy \cdot \sigma yz_j}$ $\min(MSteny) = 3.67$

Shear Ultimate:

$MSsh_j := \dfrac{F_{su1.a}}{FSu \cdot \tau x_j}$ $\min(MSsh) = 5.78$

$output4 := \text{augment}\left(ID, LC, MStenu, \dfrac{Fy}{lbf}, \dfrac{Fz}{lbf}, \dfrac{Fx}{lbf}, \dfrac{Mx}{in \cdot lbf}, \dfrac{My}{in \cdot lbf}, \dfrac{Mz}{in \cdot lbf}\right)$

$sorted := \text{csort}(output4, 3)$ $\left(sorted^T\right)^{\langle 1 \rangle T} = (66042\ \ 1037\ \ 3.2\ \ 5236.8\ \ 14701.3\ \ 13246.8\ \ 59801.5\ \ -12666.4\ \ -49926.8)$

The minimum margin of safety of 3.2 occurs on element ID 66042 and load case 1037 along with the following moments and forces: (Fx) 5236.8, (Fy) 14701.3, (Fz) 13246.8, (Mx) 59801.5, (My) -12666.4, and (Mz) -49926.8.

Loads from 2-06 detailed loads model, abort landing case

data := READPRN("cbush_abort.txt")

$j := 1 .. rows(data)$

Axial Load	$Fx_j := data_{j,3} \cdot lbf$	Torsion	$Mx_j := data_{j,6} \cdot in \cdot lbf$
Shear in Y axis	$Fy_j := data_{j,4} \cdot lbf$	Moment about Y axis	$My_j := data_{j,7} \cdot in \cdot lbf$
Shear in Z axis	$Fz_j := data_{j,5} \cdot lbf$	Moment about Z axis	$Mz_j := data_{j,8} \cdot in \cdot lbf$
Element Identification	$ID_j := data_{j,1}$		
Load Case Number	$LC_j := data_{j,2}$		

$c2 := \frac{thick}{2}$ $\quad c2 = 0.375\ in$ Distance of outer extreme fiber for plate section

Tension Stress for Section 1-1 (Mz Couple)

$Fxnor_j := \frac{|Fx_j|}{4}$ Fx Normal Force (The number 4 represents the four quadrants on the plate. Bolt numbers 1, 4, and 6 form a quadrant of the plate. See figure 2.2.4 -1.)

$Fmz_j := \frac{|Mz_j|}{r_2 \cdot 2}$ Force due to Mz couple

$Ften1_j := Fxnor_j + Fmz_j$ $\quad max(Ften1) = 11023.9\ lbf$ Total Force

$Mz1_j := Ften1_j \cdot dy$ Total Mz moment on plate along solid section (cross section 1-1)

$\sigma z1_j := \frac{Mz1_j \cdot c2}{Iz1}$ $\quad max(\sigma z1) = 12164.3\ psi$ (Stress along solid section (cross section 1-1))

Tension Stress for Section 2-2 (My Couple)

$Fxnor_j := \frac{|Fx_j|}{4}$ Fx Normal Force (The number 4 represents the four quadrants on the plate. Bolt numbers 1, 2, and 3 form a quadrant of the plate. See figure 2.2.4 -1.)

$Fmy_j := \frac{|My_j|}{r_3 \cdot 2}$ Force due to My couple

$Ften2_j := Fxnor_j + Fmy_j$ $\max(Ften2) = 9520.7\ lbf$ Total Force

$My2_j := Ften2_j \cdot dz$ Total My moment on plate along solid section (cross section 2-2)

$\sigma y2_j := \frac{My2_j \cdot c2}{Iy2}$ $\max(\sigma y2) = 4774.7\ psi$ (Stress along solid section (cross section 2-2))

Combined Corner Tensile Stress

$\sigma yz_j := \sqrt{(\sigma z1_j)^2 + (\sigma y2_j)^2}$ $\max(\sigma yz) = 12734.5\ psi$

Shear Forces for Section 1-1 (Mx Couple)

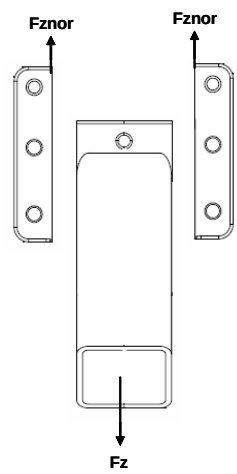

$Fznor_j := \frac{|Fz_j|}{2}$ Fz Normal Force (The two side flanges of the plate section shear along the solid section. See following picture.)

$Fmx1_j := \frac{|Mx_j|}{r_2 \cdot 2}$ Force due to Mx couple

$Fsh1_j := Fznor_j + Fmx1_j$ $\max(Fsh1) = 18847.4\ lbf$ Total Force

$\tau x1_j := \frac{Fsh1_j}{A1}$ $\max(\tau x1) = 3466.2\ psi$ (Stress along solid section (cross section 1-1))

Shear Forces for Section 2-2 (Mx Couple)

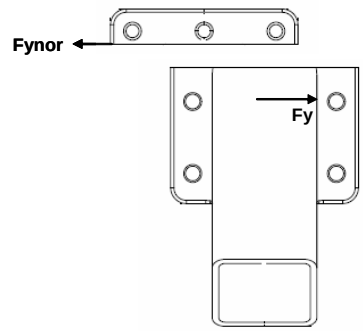

$Fynor_j := |Fy_j|$ Fy Normal Force (The top flange of the plate section shears along the top solid section. See following picture.)

$Fmx2_j := \frac{|Mx_j|}{r_3 \cdot 2}$ Force due to Mx couple

$Fsh2_j := Fynor_j + Fmx2_j$ $\max(Fsh2) = 18320.2\ lbf$ Total Force

$\tau x2_j := \frac{Fsh2_j}{A2}$ $\max(\tau x2) = 3397.8\ psi$ (Stress along solid section (cross section 1-1))

Combined Corner Shear Stress

$\tau x_j := \sqrt{(\tau x1_j)^2 + (\tau x2_j)^2}$ $\max(\tau x) = 4853.8\ psi$

Margins of Safety for Plate Section (Abort Landing):

Tension Ultimate:

$MStenu_j := \frac{F_{tu1.a}}{FSu \cdot \sigma yz_j}$ $\min(MStenu) = 3.52$

Tension Yield:

$MSteny_j := \frac{F_{ty1.a}}{FSy \cdot \sigma yz_j}$ $\min(MSteny) = 4.03$

Shear Ultimate:

$MSsh_j := \frac{F_{su1.a}}{FSu \cdot \tau x_j}$ $\min(MSsh) = 6.01$

$output4 := augment\left(ID, LC, MStenu, \frac{Fy}{lbf}, \frac{Fz}{lbf}, \frac{Fx}{lbf}, \frac{Mx}{in \cdot lbf}, \frac{My}{in \cdot lbf}, \frac{Mz}{in \cdot lbf}\right)$

$sorted := csort(output4, 3)$ $\left(sorted^T\right)^{\langle 1 \rangle T} = (66041\ \ 2015\ \ 3.52\ \ 4701.1\ \ -12932.9\ \ -15833.4\ \ 68095.3\ \ 17773.2\ \ -38860$

The minimum margin of safety of 3.52 occurs on element ID 66041 and load case 2015 along with the following moments and forces: (Fx) 4701.1, (Fy) -12932.9, (Fz) -15833.4, (Mx) 68095.3, (My) 17773.2, and (Mz) -38860.6.

2.2.5 RICH Mounting Bracket

Margins of Safety

Table 2.2.5-1: Minimum Margin of Safety Summary

Part / Dwg Number	Part Name / Description	Material & Heat Treatment	Critical Load Condition	Failure Mode	Margin of Safety	Reference Page
SDG39135763	RICH Brackets	AL ALY 7050-T7451	Landing	Max Prin. Stress	0.90 (u)	2.2.5-13

Notes:

1. Factors of Safety are 1.4 for Ultimate and 1.1 for Yield.
2. Boundary condition is at five Trunnion locations.
3. All 192 load cases of Launch and Landing are applied.
4. u = ultimate, y = yield

Factors of Safety

The hardware is designed with a yield factor of 1.1 and an ultimate factor of 1.4 against limit loads for Launch and Landing.

Description of Structure

Figure 2.2.5-1 below shows the location of six RICH Brackets in AMS-02. The Brackets were machined out of 7050-T7451 Aluminum Alloy plate. They were riveted to Centerbody Tubes. Part of a Bracket was bolted to Ring Imaging Cherenkov Counter (RICH).

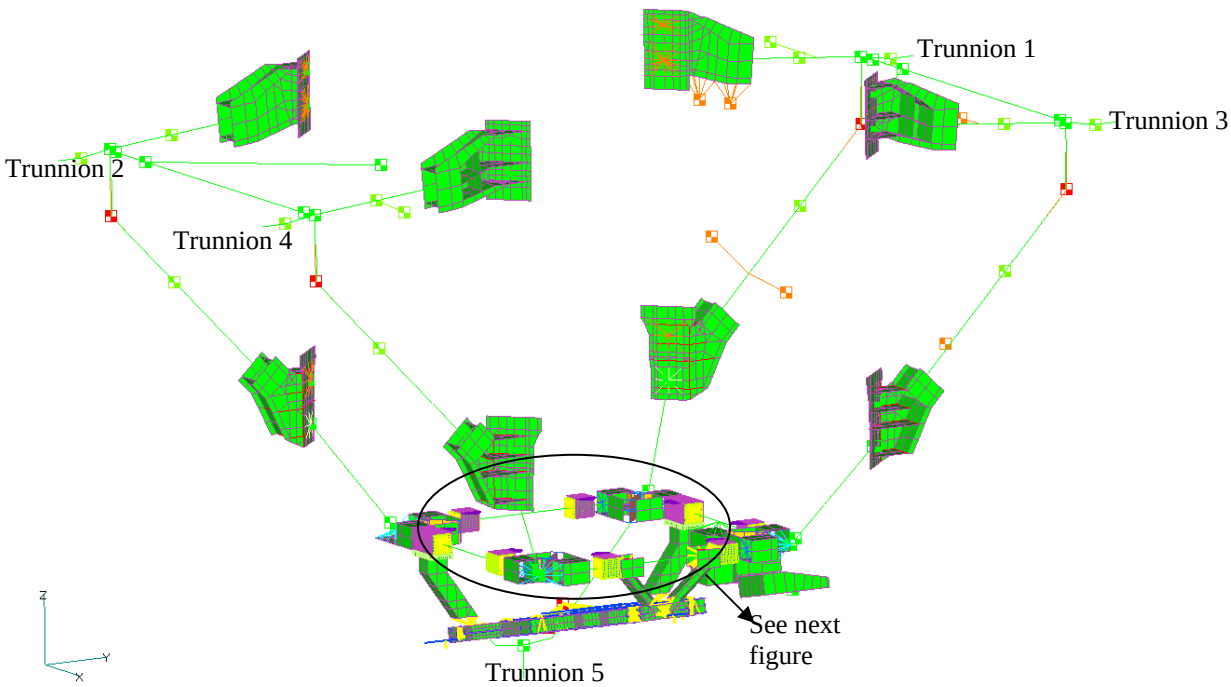

Figure 2.2.5-1: Location of RICH Brackets in AMS-02

* Note that the above figure does not show Vacuum Case for clarity.

Description of Model

A FEM model was built of the RICH Brackets using FEMAP software.

1. Parts were mainly modeled as CQUAD4 and CTRIA3 plate elements.
2. Section of Centerbody Tube, which was coupled with Brackets, was CQUAD4 plate elements.
3. All rivets was modeled as RBE2 rigid elements with DOF's 1&2, 1&3, or 2&3.
4. Continuation of Centerbody Tube beam elements and plate elements was represented by RBE2 rigid elements with DOF's 1-6.
5. Bar elements were found at intersection between two plates.

The model of RICH Brackets was then imported into USS2-04 load model. A built PAS model was also intergrated into the load model.

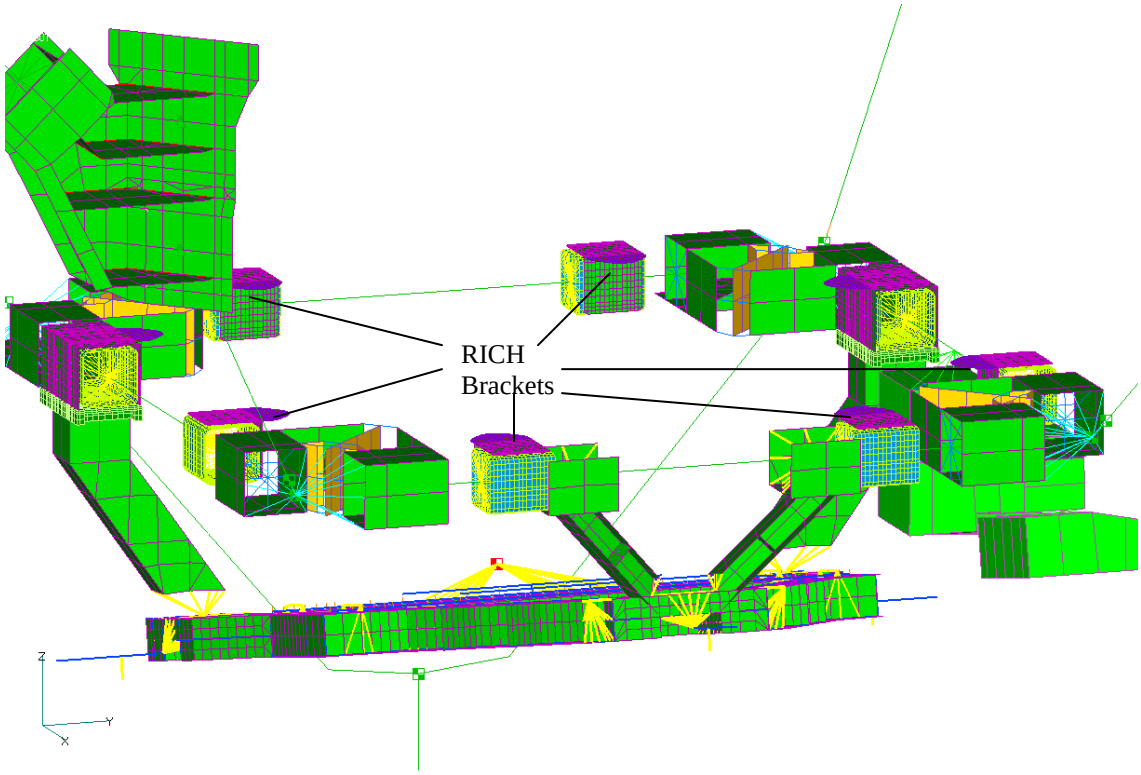

Figure 2.2.5-2: FEMAP Model of RICH Brackets

The model was constrained with DOF's 1&3 at Trunnion 1&2 (see Figure 2.2.5-1), with DOF's 3 at Trunnion 3&4, and with DOF's 2 at Trunnion 5.

All 192 load cases for Launch and Landing were applied.

MSC/NASTRAN v.2005 was used as a solver for analyzing the complete math model of AMS-02.

Plate stresses were recovered and sorted to find the maximum of Principal, Von-Mises, and Shear in RICH Brackets. Forces at rivet location were also requested.

Table below shows details of model inputs.

Table 2.2.5-2: Inputs of Finite Element Model of RICH Brackets

DESCRIPTION	NODE #	ELEM #	TYPE	COLOR	PROP	MAT'L	LC#	SPC#	COORD
rich bracket	200,001 - 212,802	200,001 - 202,424	plate	124	200,001 - 0.25" TK	200,001			
			plate	14	200,002 - 0.4375" TK				
									200001
									1001001
centerbody tube									
@ rich		215,001 - 218,840	plate	85	200,011 - tube	200,001			
		220,001 - 220,464							
			bar	24	200,003 - dummy	200,001			
rivets	215,001 - 215,504		rbe2	13					
misc			rbe2	20					
PAS	300,001 - 303,474	300,001 - 304,504			300,001 - 300,023	300,001 - 300,006	300,001	300,001	300,001 - 300,002

Model Checks

Rigid body checks were performed using MSC/NASTRAN. Results are shown below. The KGG, KNN and KFF matrices all pass with low strain energies.

```
*** USER INFORMATION MESSAGE 7570 (GPWG1D)
    RESULTS OF RIGID BODY CHECKS OF MATRIX KGG      (G-SET)  FOLLOW:
    PRINT RESULTS IN ALL SIX DIRECTIONS AGAINST THE LIMIT OF   1.000000E-02
        DIRECTION       STRAIN ENERGY       PASS/FAIL
        ---------       -------------       ---------
          1             1.273202E-07        PASS
          2             4.420144E-08        PASS
          3             1.633816E-08        PASS
          4             5.057998E-05        PASS
          5             1.047791E-04        PASS
          6             1.609049E-04        PASS


*** USER INFORMATION MESSAGE 7570 (GPWG1D)
    RESULTS OF RIGID BODY CHECKS OF MATRIX KNN      (N-SET)  FOLLOW:
    PRINT RESULTS IN ALL SIX DIRECTIONS AGAINST THE LIMIT OF   1.000000E-02
        DIRECTION       STRAIN ENERGY       PASS/FAIL
        ---------       -------------       ---------
          1             1.263888E-07        PASS
          2             4.129834E-08        PASS
          3             1.326043E-08        PASS
          4             5.075881E-05        PASS
          5             1.044385E-04        PASS
          6             1.661979E-04        PASS


*** USER INFORMATION MESSAGE 7570 (GPWG1D)
    RESULTS OF RIGID BODY CHECKS OF MATRIX KFF      (F-SET)  FOLLOW:
    PRINT RESULTS IN ALL SIX DIRECTIONS AGAINST THE LIMIT OF   1.000000E-02
        DIRECTION       STRAIN ENERGY       PASS/FAIL
        ---------       -------------       ---------
          1             1.263888E-07        PASS
          2             4.129834E-08        PASS
          3             1.326043E-08        PASS
          4             5.075881E-05        PASS
          5             1.044385E-04        PASS
          6             1.661979E-04        PASS
```

```
*** USER INFORMATION MESSAGE 7570 (GPWG1D)
    RESULTS OF RIGID BODY CHECKS OF MATRIX KAA1     (A-SET)  FOLLOW:
    PRINT RESULTS IN ALL SIX DIRECTIONS AGAINST THE LIMIT OF   1.000000E-02
        DIRECTION       STRAIN ENERGY       PASS/FAIL
        ---------       -------------       ---------
          1             1.263888E-07        PASS
          2             4.129834E-08        PASS
          3             1.326043E-08        PASS
          4             5.075881E-05        PASS
          5             1.044385E-04        PASS
          6             1.661979E-04        PASS
```

A further check is that of rigid body modes. The first 10 unconstrained modes are shown below. There are six rigid body modes (~ 0.0), and then good separation with the first non-rigid body mode.

Table 2.2.5-3: Eigenvalue Summary of RICH Brackets Model

R E A L E I G E N V A L U E S						
MODE NO.	EXTRACTION ORDER	EIGENVALUE	RADIANS	CYCLES	GENERALIZED MASS	GENERALIZED STIFFNESS
1	1	-5.53E-06	2.35E-03	3.74E-04	1.00E+00	-5.53E-06
2	2	3.02E-06	1.74E-03	2.76E-04	1.00E+00	3.02E-06
3	3	5.91E-06	2.43E-03	3.87E-04	1.00E+00	5.91E-06
4	4	1.21E-05	3.47E-03	5.53E-04	1.00E+00	1.21E-05
5	5	2.89E-05	5.38E-03	8.56E-04	1.00E+00	2.89E-05
6	6	3.10E-05	5.56E-03	8.86E-04	1.00E+00	3.10E-05
7	7	3.56E+07	5.97E+03	9.50E+02	1.00E+00	3.56E+07
8	8	5.44E+07	7.37E+03	1.17E+03	1.00E+00	5.44E+07
9	9	7.79E+07	8.83E+03	1.41E+03	1.00E+00	7.79E+07
10	10	1.61E+08	1.27E+04	2.02E+03	1.00E+00	1.61E+08

Additional check is comparision of the Strap loads between the load model and the detail model. The loads are picked randomly. Loads in both models are closely matched.

Table 2.2.5-4: Strap Loads (lbf) in Load Model 2-04

Case	***90001***	***90002***	***90003***	***90004***	***90005***	***90006***	***90007***	***90008***	***90009***	***90010***	***90011***	***90012***	***90013***	***90014***	***90015***	***90016***
1001	1186.6	1615.3	1495.4	2128.4	1241.3	3808.0	1382.5	5331.2	5259.6	1683.6	10097.9	2054.3	7952.9	3314.8	9044.1	3929.6
1023	1171.3	2245.6	1605.7	6899.0	1013.3	1511.8	1670.6	3157.0	7264.3	4582.4	6207.3	3965.4	6681.8	1678.2	10078.1	1914.3
2031	3923.0	6907.2	1444.7	1555.9	2975.5	6887.1	1389.8	1621.2	6181.0	8787.8	1481.6	1652.1	7512.9	5265.2	1564.0	1500.3
2040	2119.5	1696.3	5485.8	2655.9	2756.3	2103.0	7067.2	3734.3	1495.0	1586.5	1980.6	2141.0	1433.5	2698.7	1621.3	4952.3
4050	1896.4	2100.0	3024.5	3905.9	5116.4	1178.1	6429.4	1281.8	882.7	1133.1	2774.4	6618.2	682.0	1087.4	1612.9	2519.9
4064	7657.7	3755.7	1663.0	1556.5	10633.2	1494.6	2604.4	1236.1	5487.6	10488.8	593.2	852.8	2100.1	7849.4	479.6	947.1

Table 2.2.5-5: Strap Loads (lbf) in RICH Brackets Model

Case	***90001***	***90002***	***90003***	***90004***	***90005***	***90006***	***90007***	***90008***	***90009***	***90010***	***90011***	***90012***	***90013***	***90014***	***90015***	***90016***
1001	1195.5	1626.4	1487.0	2103.9	1243.4	3955.8	1377.0	5313.0	5456.3	1695.6	9916.7	2040.5	8043.0	3343.1	9093.3	3917.9
1023	1169.8	2238.5	1606.0	6878.7	1014.5	1513.0	1674.1	3197.3	7269.8	4497.9	6255.0	3913.6	6651.4	1685.5	10027.4	1920.5
2031	3932.3	6885.9	1446.3	1556.1	2993.2	6918.0	1390.2	1620.2	6117.1	8757.8	1481.3	1653.5	7487.3	5279.0	1562.3	1500.0
2040	2119.5	1696.3	5485.2	2655.8	2756.4	2103.1	7067.2	3734.8	1495.0	1586.5	1980.6	2141.1	1433.5	2698.7	1621.2	4952.8
4050	1896.4	2098.6	3021.5	3883.5	5118.2	1179.8	6366.9	1281.3	884.2	1135.0	2761.4	6589.3	685.4	1089.2	1609.6	2492.2
4064	7658.5	3754.2	1662.9	1556.4	10634.0	1494.7	2604.8	1236.2	5487.8	10489.4	593.2	852.9	2100.0	7847.2	479.6	947.1

Table 2.2.5-6: Load Differences (lbf) between Two Models

Case	***90001***	***90002***	***90003***	***90004***	***90005***	***90006***	***90007***	***90008***	***90009***	***90010***	***90011***	***90012***	***90013***	***90014***	***90015***	***90016***
1001	-8.9	-11.1	8.3	24.6	-2.0	-147.8	5.5	18.2	-196.7	-12.0	181.3	13.8	-90.1	-28.3	-49.2	11.6
1023	1.5	7.2	-0.3	20.3	-1.1	-1.2	-3.6	-40.4	-5.5	84.5	-47.7	51.8	30.3	-7.3	50.6	-6.2
2031	-9.2	21.3	-1.6	-0.2	-17.8	-30.9	-0.4	1.0	64.0	30.0	0.3	-1.4	25.6	-13.8	1.7	0.2
2040	0.0	0.0	0.6	0.1	-0.1	0.0	0.0	-0.5	0.0	0.0	0.0	0.0	0.0	0.1	0.1	-0.5
4050	0.0	1.4	3.0	22.5	-1.9	-1.7	62.4	0.4	-1.5	-1.9	13.0	28.9	-3.4	-1.9	3.3	27.7
4064	-0.8	1.5	0.1	0.2	-0.8	-0.1	-0.3	-0.1	-0.2	-0.6	-0.1	0.0	0.1	2.2	0.0	0.0

Note: 1. Negative sign in Table 2.2.5-6 means load in Detail model greater than in Load model.

Material and Temperature

The RICH Brackets are 7050-T7451 Aluminum Alloy. Material property of 7050-T7451 are taken from Boeing Material Specification of BMS 7-323C, and MIL-HDBK-5H . Temperature limits are based upon *ICD-2-19001 (Shuttle Orbiter / Cargo Standard Interfaces), Revision-L*. For Launch condition, the temperature of 150°F is applied. For Landing condition, the temperature of 220°F is applied.

Analysis

The critical stresses for the RICH Brackets are compared to the ultimate and yield strength of 7050-T7451 Aluminum Alloy. All margins of safety are positive.

Check of RICH Brackets

Material Properties : 7050-T7451 AL ALY, BMS 7-323C or AMS 4050 *(Boeing Material Specification, BMS 7-323C, Table 1 & MIL-HDBK-5H, Table 3.7.3.0(b_1) for thickness of 3.001"-4.000")*

$F_{tu} := 68000\,psi$

$F_{ty} := 57000\,psi$

$F_{su} := 43000\,psi$

Factors of Safety, $FS_u := 1.4$ $FS_y := 1.1$ *(For Launch and Landing conditions)*

Table below was drawn from ICD-2-19001, 04-MAR-99. Maximum temperatures of 150 ºF and 220ºF for Launch and Landing respectively are selected in the analysis.

*** In this analysis of RICH Bracket, On-Orbit loads are considered smaller than Launch and Landing. Therefore, On-Orbit loads are neglected.

TABLE 6.1.4.1-1 CARGO BAY WALL TEMPERATURE

CONDITION	TEMPERATURE	
	Minimum	Maximum
1. Prelaunch (1)	+40°F	+120°F
2. Launch (1)	+40°F	+150°F
3. On-Orbit (doors open) (2) (4)	-250°F	+200°F
4. Entry and Post-landing (3) (4)	-50°F	+220°F

Temperature Reduction Factors, *(Ref. MIL-HDBK-5H, Figure 3.7.3.2.1)*

+ At 150ºF for Launch condition:

- Ultimate: $\gamma_{u1} := 0.94$

- Yield: $\gamma_{y1} := 0.98$

+ At 220ºF for Landing condition:

$\gamma_{u2} := 0.84$

$\gamma_{y2} := 0.92$

Allowable stresses due to Temperature Reduction Factors:

+ For Launch condition:

$F_{tu1.a} := \gamma_{u1} \cdot F_{tu}$

$F_{tu1.a} = 63920\ \text{psi}$

$F_{ty1.a} := \gamma_{y1} \cdot F_{ty}$

$F_{ty1.a} = 55860\ \text{psi}$

$F_{su1.a} := \gamma_{u1} \cdot F_{su}$

$F_{su1.a} = 40420\ \text{psi}$

+ For Landing condition:

$F_{tu2.a} := \gamma_{u2} \cdot F_{tu}$

$F_{tu2.a} = 57120\ \text{psi}$

$F_{ty2.a} := \gamma_{y2} \cdot F_{ty}$

$F_{ty2.a} = 52440\ \text{psi}$

$F_{su2.a} := \gamma_{u2} \cdot F_{su}$

$F_{su2.a} = 36120\ \text{psi}$

Maximum Von-Mises, principal, and shear stresses of both plate and solid elements are selected from 192 load cases for Launch and Landing. NASPOST V.2.1 is used to sort out the maximum stresses within the load cases.

+ For Launch condition: *(Stress contour plot shown in Figure 2.2.5-3)*

$\sigma_{uu1.max} := 13223 \cdot psi$ *LC# 1015, ELEM# 202230; p.A8-3*

$\sigma_{uy1.max} := 11951 \cdot psi$ *LC# 1015, ELEM# 202230; p.A8-3*

$\sigma_{us1.max} := 6611 \cdot psi$ *LC# 1015, ELEM# 202230; p.A8-3*

+ For Landing condition: *(Stress contour plot shown in Figure 2.2.5-4)*

$\sigma_{uu2.max} := 21430 \cdot psi$ *LC# 4062, ELEM# 200168; p.A8-7*

$\sigma_{uy2.max} := 19004 \cdot psi$ *LC# 4062, ELEM# 200168; p.A8-7*

$\sigma_{us2.max} := 10715 \cdot psi$ *LC# 4062, ELEM# 200168; p.A8-7*

The values shown above are maximum stresses.

The following pages show stresses sorted by NASPOST V.2.1.

Margins of Safety,

+ For Launch condition:

$$MS_{u1} := \frac{F_{tu1.a}}{FS_u \cdot \sigma_{uu1.max}} - 1 \qquad MS_{u1} = 2.45$$

$$MS_{y1} := \frac{F_{ty1.a}}{FS_y \cdot \sigma_{uy1.max}} - 1 \qquad MS_{y1} = 3.25$$

$$MS_{s1} := \frac{F_{su1.a}}{FS_u \cdot \sigma_{us1.max}} - 1 \qquad MS_{s1} = 3.37$$

+ For Landing condition:

$$MS_{u2} := \frac{F_{tu2.a}}{FS_u \cdot \sigma_{uu2.max}} - 1 \qquad MS_{u2} = 0.9$$

$$MS_{y2} := \frac{F_{ty2.a}}{FS_y \cdot \sigma_{uy2.max}} - 1 \qquad MS_{y2} = 1.51$$

$$MS_{s2} := \frac{F_{su2.a}}{FS_u \cdot \sigma_{us2.max}} - 1 \qquad MS_{s2} = 1.41$$

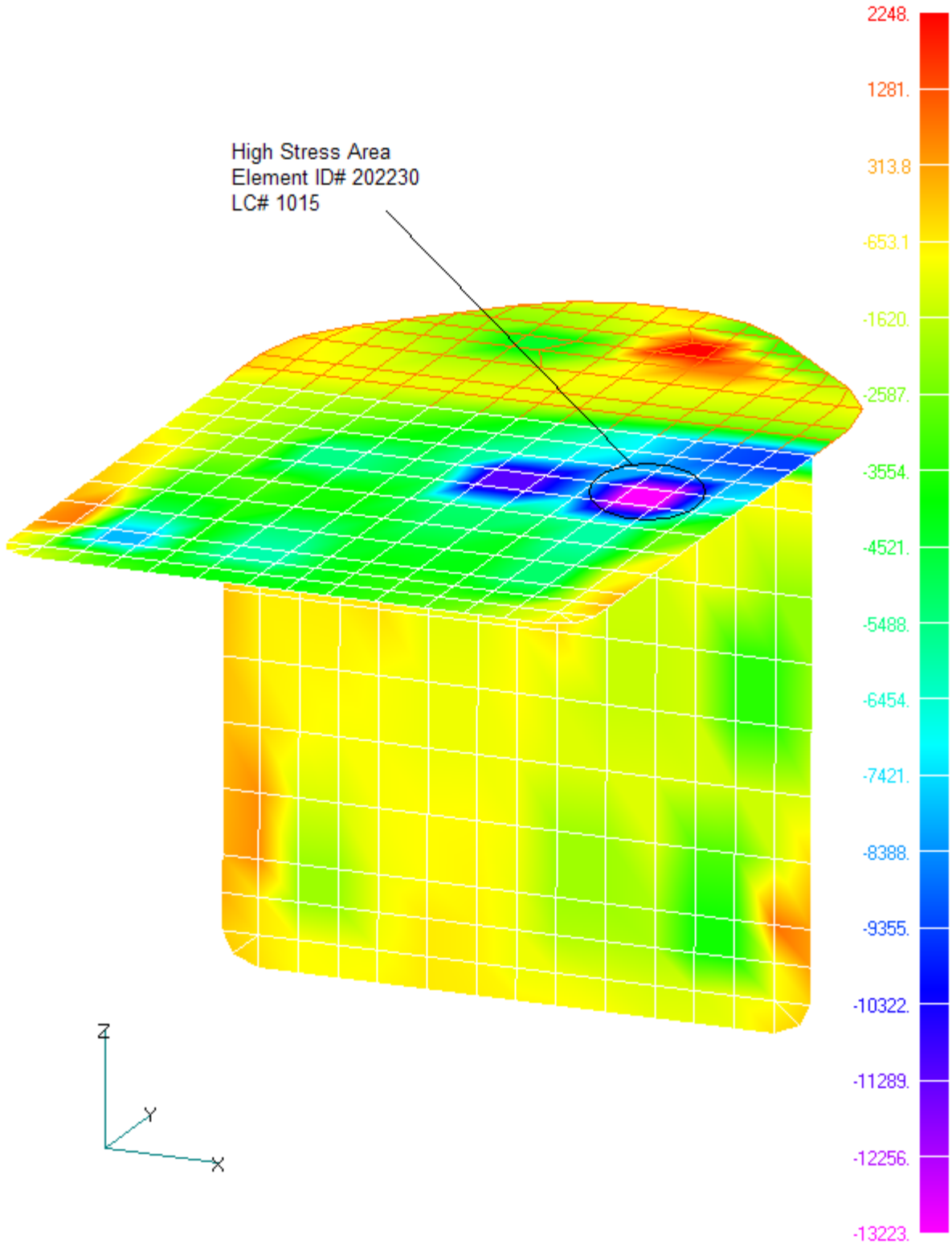

Figure 2.2.5-3 - Stress Contour Plot of RICH Brackets in Launch Condition

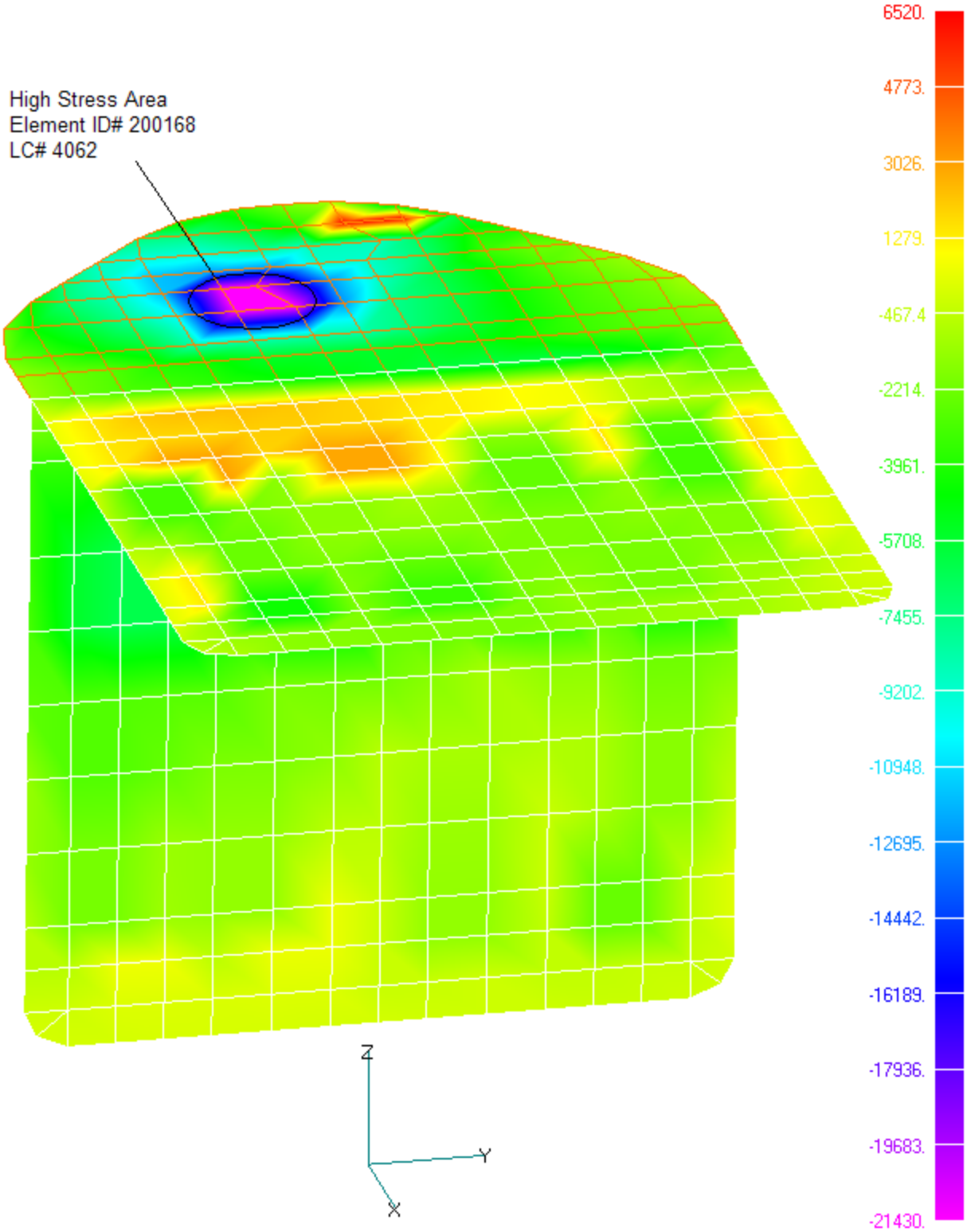

Figure 2.2.5-4 - Stress Contour Plot of RICH Brackets in Landing Condition

2.2.6 Lower Angle Beam Assembly

LOWER ANGLE BEAM

Since part is a slender beam with compressive loads, buckling is critical.

In Finite Element Model of USS-02 version 2-04 shown in Figure 2.2.6-1, Lower Angle Beam includes Element Ids of 1602-1603, 1607-1608, 1612-1613, and1617-1618. These elements has Property Id of 1006.

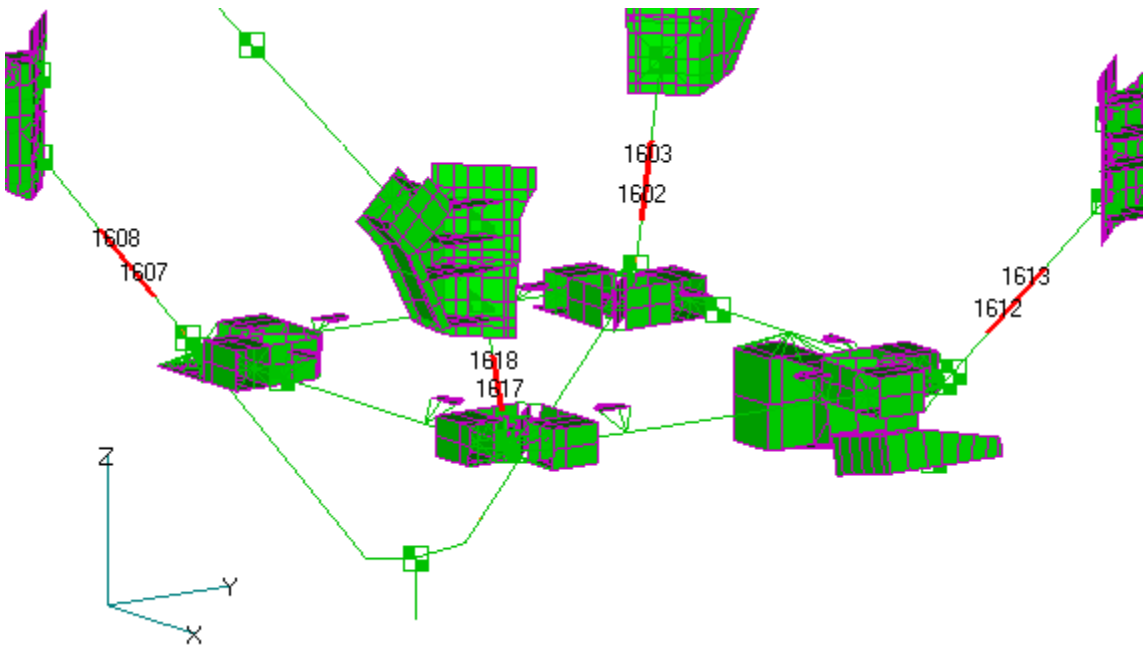

Figure 2.2.6-1: Lower Angle Beam shown in Lower uss2-04 Model

Factor of Safety, $FS := 1.4$

Material: AL 7075-T73511 *(Ref. MIL-HDBK-5H, Table 3.7.4.0(g_2), p.3-361; Thickness: 0.250-0.499)*

Compressive modulus, $Ec := 10700000 \cdot psi$

Ultimate tensile strength, $ftu := 68000 \cdot psi$

Tensile yield strength, $fty := 57000 \cdot psi$

Compression yield strength, $fcy := 60000 \cdot psi$

Ultimate shear strength, $fsu := 38000 \cdot psi$

Section: 5.0" x 5.0" x 0.25" Tube *(Ref. Dwg# SDG39135764, SectionA-A & B-B)*

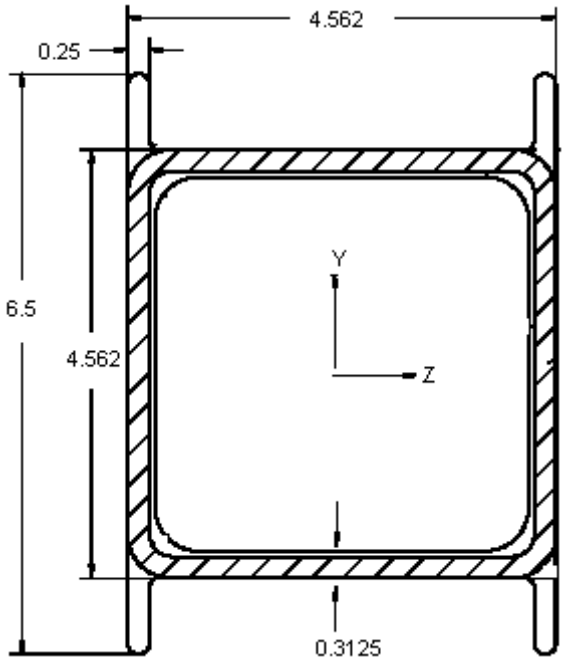

Shape Factor, $f := 1.22$ *(Ref. Structural Engineering Handbook, 4th Edition, Table 7, p.11-15)*

Supported length, $L := 9.33 \cdot in$

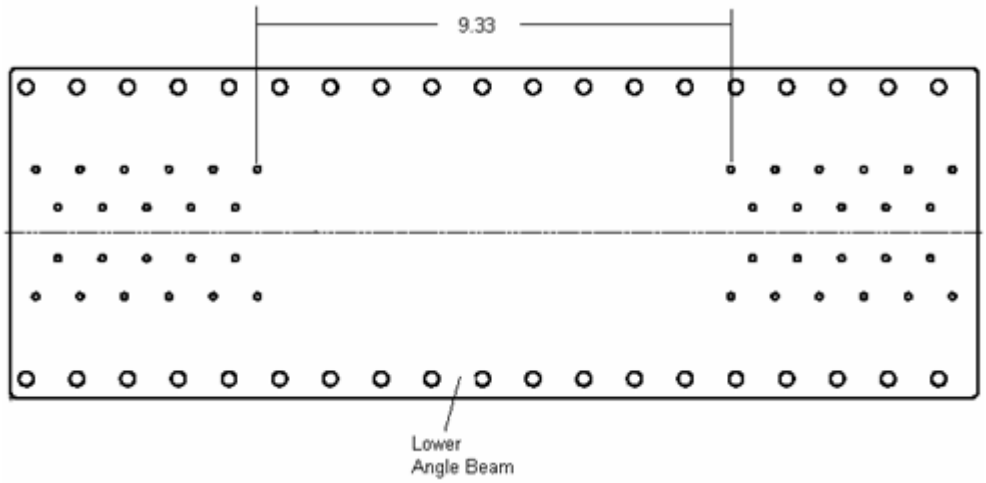

Width, $Dy := 6.5 \cdot in$

For torsional calculation, use: $Dytor := 4.562 \cdot in$

Depth, $Dz := 4.562 \cdot in$

For torsional calculation, use: $Dztor := 4.562 \cdot in$

Thickness, $t := 0.3125 \cdot in$

Define: $b := 2 \cdot t$

Properties of cross-section: *(Ref. Table 2.2.6-1)*

Area, $A := 6.172 \cdot in^2$

Moment of Inertia, $Iy := 19.963 \cdot in^4$

$Iz := 22.526 \cdot in^4$

First moments, $Qy := 5.154 \cdot in^3$

$Qz := 5.410 \cdot in^3$

Table 2.2.6-1a: Property about Y-Y axis

Portion	b	d	Area, A	z	Az	Az^2	Icy	Iy'
1	0.2345	0.3125	0.0733	4.4058	0.3229	1.4224	0.0006	1.4230
2	5.4690	0.3125	1.7091	4.4058	7.5297	33.1740	0.0139	33.1879
3	0.2345	0.3125	0.0733	4.4058	0.3229	1.4224	0.0006	1.4230
4	0.3125	3.9370	1.2303	2.2810	2.8063	6.4013	1.5892	7.9904
5	0.3125	3.9370	1.2303	2.2810	2.8063	6.4013	1.5892	7.9904
6	0.2345	0.3125	0.0733	0.1563	0.0115	0.0018	0.0006	0.0024
7	5.4690	0.3125	1.7091	0.1563	0.2670	0.0417	0.0139	0.0556
8	0.2345	0.3125	0.0733	0.1563	0.0115	0.0018	0.0006	0.0024
Sum		**A=**	**6.172**		14.0780			52.0752

z_bar= 2.281

Iyy= 19.963

Table 2.2.6-1b: Property about Z-Z axis

Portion	b	d	Area, A	y	Ay	Ay^2	Icz	Iz'
1	0.3125	0.2345	0.0733	0.1173	0.0086	0.0010	0.0003	0.0013
2	0.3125	5.4690	1.7091	3.2500	5.5545	18.0520	4.2598	22.3118
3	0.3125	0.2345	0.0733	6.3828	0.4677	2.9854	0.0003	2.9858
4	3.9370	0.3125	1.2303	1.1253	1.3844	1.5578	0.0100	1.5678
5	3.9370	0.3125	1.2303	5.3748	6.6126	35.5412	0.0100	35.5512
6	0.3125	0.2345	0.0733	0.1173	0.0086	0.0010	0.0003	0.0013
7	0.3125	5.4690	1.7091	3.2500	5.5545	18.0520	4.2598	22.3118
8	0.3125	0.2345	0.0733	6.3828	0.4677	2.9854	0.0003	2.9858
Sum		**A=**	**6.172**		20.0586			87.7169

y_bar= 3.250

Izz= 22.526

Table 2.2.6-1c: First Moment about Y-Y axis

Portion	b	d	Area, A	z	Qyy
1	0.2345	0.3125	0.07328125	2.1248	0.1557
2	5.4690	0.3125	1.7090625	2.1248	3.6313
3	0.2345	0.3125	0.07328125	2.1248	0.1557
4	0.3125	1.9685	0.61515625	0.9843	0.6055
5	0.3125	1.9685	0.61515625	0.9843	0.6055
Sum				**Qyy=**	**5.154**

Table 2.2.6-1d: First Moment about Z-Z axis

Portion	b	d	Area, A	y	Qzz
3	0.3125	0.2345	0.07328125	3.1328	0.2296
2	0.3125	2.7345	0.85453125	1.3673	1.1684
5	3.9370	0.3125	1.2303125	2.1248	2.6141
8	0.3125	0.2345	0.07328125	3.1328	0.2296
7	0.3125	2.7345	0.85453125	1.3673	1.1684
Sum				**Qzz=**	**5.410**

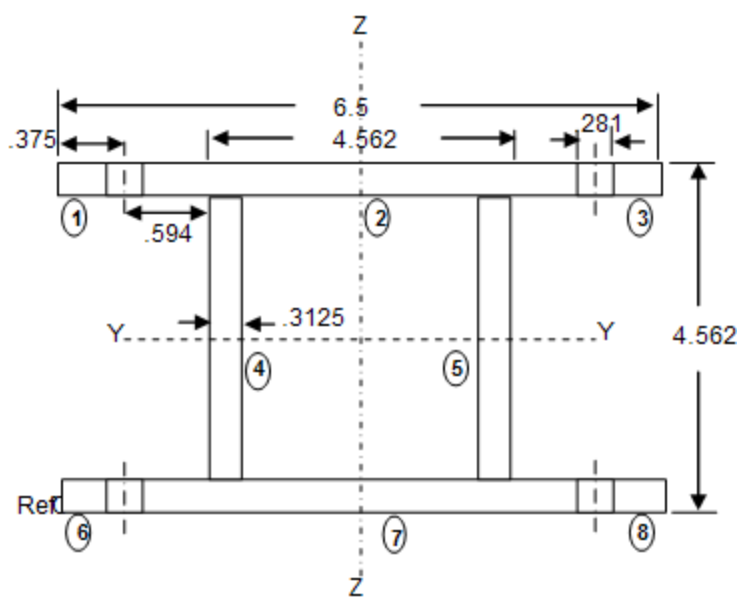

Section modulus, $Sy := \dfrac{Iy}{\frac{1}{2}\cdot Dz}$ $\quad Sy = 8.752\ in^3$

$Sz := \dfrac{Iz}{\frac{1}{2}\cdot Dy}$ $\quad Sz = 6.931\ in^3$

Torsional constant / distance, $JoR := 2\cdot t\cdot(Dztor - t)\cdot(Dytor - t)$ $\quad JoR = 11.286\ in^3$

Radii of gypration, $ry := \sqrt{\dfrac{Iy}{A}}$ $\quad ry = 1.798\ in$

$rz := \sqrt{\dfrac{Iz}{A}}$ $\quad rz = 1.91\ in$

Fixity coefficient, *(One end fixed, one end free in translation)* $K := 1.2$ *(Ref. Structural Engineering Handbook, 4th Edition, Figure 5, p.8-10)*

Slenderness ratios, $SRy := \dfrac{K\cdot L}{ry}$ $\quad SRy = 6.225$

$SRz := \dfrac{K\cdot L}{rz}$ $\quad SRz = 5.86$

Constants depending upon the mechanical properties of the material from Ref. Structural Engineering Handbook, 4th Edition, Formulas 5a-c, p.11-6:

$$Bc := fcy\cdot\left[1 + \left(\frac{fcy}{2250000\cdot psi}\right)^{\frac{1}{2}}\right] \qquad Bc = 69798\ psi$$

$$Dc := \frac{Bc}{10}\cdot\left(\frac{Bc}{Ec}\right)^{\frac{1}{2}} \qquad Dc = 564\ psi$$

$$Cc := 0.41\cdot\frac{2\cdot Bc}{3\cdot Dc} \qquad Cc = 33.843$$

Compression allowables:

$$Fcy := \begin{cases} Bc - Dc \cdot SRy & \text{if } SRy \le Cc \\ Ec \cdot \left(\frac{\pi}{SRy}\right)^2 & \text{otherwise} \end{cases} \qquad Fcy = 66289\,psi$$

$$Fcz := \begin{cases} Bc - Dc \cdot SRz & \text{if } SRz \le Cc \\ Ec \cdot \left(\frac{\pi}{SRz}\right)^2 & \text{otherwise} \end{cases} \qquad Fcz = 66494\,psi$$

Ref. Structural Engineering Handbook, 4th Edition, p.11-25, defines:

$$Fey := \frac{102000000 \cdot psi}{FS \cdot SRy^2} \qquad Fey = 1879950\,psi$$

$$Fez := \frac{102000000 \cdot psi}{FS \cdot SRz^2} \qquad Fez = 2121312\,psi$$

Ultimate shear allowables:

$$Vulty := fsu \cdot \frac{Iz \cdot b}{Qz} \qquad Vulty = 98890\,lbf$$

$$Vultz := fsu \cdot \frac{Iy \cdot b}{Qy} \qquad Vultz = 91991\,lbf$$

Ultimate torsion allowable:

$$Tult := fsu \cdot JoR \qquad Tult = 428883\,in \cdot lbf$$

Axial tensile allowable:

$$Pt := ftu \cdot A \qquad Pt = 419696\,lbf$$

Axial compression allowable:

$$Pcr := \begin{cases} Fcz \cdot A & \text{if } Fcy \ge Fcz \\ Fcy \cdot A & \text{otherwise} \end{cases} \qquad Pcr = 409133\,lbf$$

Ultimate bending allowables:

$$Multy := Sy \cdot [ftu + (f - 1) \cdot fty] \qquad Multy = 704875\,in \cdot lbf$$

$$Multz := Sz \cdot [ftu + (f - 1) \cdot fty] \qquad Multz = 558229\,in \cdot lbf$$

Combined bending and axial allowables:

$$Pey := Fey \cdot A \qquad Pey = 11603050\,lbf$$

$$Pez := Fez \cdot A \qquad Pez = 13092737\,lbf$$

NASPOST was used to list all element loads of Lower Angle Beams in the file named "lab.lis". The file is located at /hsm/phoang/ams2/uss/bklg. Input for NASPOST was taken from 192 punch files in three different folders:

/hsm/bsommer/ams/nonlin/1000/2-04
/hsm/bsommer/ams/nonlin/2000/2-04
/hsm/bsommer/ams/nonlin/4000/2-04

File "lab.txt" was generated from "lab.lis" by removing all texts and comments.
MathCAD will read in all datum from "lab.txt" for the calculation below.

$load := READPRN("lab.txt")$ $\qquad i := 1 .. rows(load)$

Element ID: $ID := load^{\langle 1 \rangle}$ $\qquad$ Load case number: $LC := load^{\langle 2 \rangle}$

+ At end A of beam element:

Moment: $M1a := load^{\langle 3 \rangle} \cdot in \cdot lbf$ $\qquad M2a := load^{\langle 4 \rangle} \cdot in \cdot lbf$

Shear force: $V1a := load^{\langle 5 \rangle} \cdot lbf$ $\qquad V2a := load^{\langle 6 \rangle} \cdot lbf$

Axial force: $Pa := load^{\langle 7 \rangle} \cdot lbf$

Total torque: $Toa := load^{\langle 8 \rangle} \cdot in \cdot lbf$

Warp torque: $Warpa := load^{\langle 9 \rangle} \cdot in \cdot lbf$

+ At end B of beam element:

Moment: $M1b := load^{\langle 10 \rangle} \cdot in \cdot lbf$ $\qquad M2b := load^{\langle 11 \rangle} \cdot in \cdot lbf$

Shear force: $V1b := load^{\langle 12 \rangle} \cdot lbf$ $\qquad V2b := load^{\langle 13 \rangle} \cdot lbf$

Axial force: $Pb := load^{\langle 14 \rangle} \cdot lbf$

Total torque: $Tob := load^{\langle 15 \rangle} \cdot in \cdot lbf$

Warp torque: $Warpb := load^{\langle 16 \rangle} \cdot in \cdot lbf$

Modify end torque by subtracting warping torque:

$$Ta_i := \left|Toa_i\right| - \left|Warpa_i\right|$$

$$Tb_i := \left|Tob_i\right| - \left|Warpb_i\right|$$

Shear ratios:

$$RSa_i := \frac{\left|V1a_i\right|}{Vulty} + \frac{\left|V2a_i\right|}{Vultz} + \frac{Ta_i}{Tult}$$

$$RSb_i := \frac{\left|V1b_i\right|}{Vulty} + \frac{\left|V2b_i\right|}{Vultz} + \frac{Tb_i}{Tult}$$

Tensile ratio at end A:

$$RTa_i := \begin{cases} \dfrac{\left|Pa_i\right|}{Pt} + \dfrac{\left|M2a_i\right|}{Multy} + \dfrac{\left|M1a_i\right|}{Multz} & \text{if } Pa_i \ge 0\cdot lbf \\ \dfrac{\left|Pa_i\right|}{Pcr} + \dfrac{\left|M2a_i\right|}{Multy}\cdot\dfrac{1}{1-\dfrac{\left|Pa_i\right|}{Pey}} + \dfrac{\left|M1a_i\right|}{Multz}\cdot\dfrac{1}{1-\dfrac{\left|Pa_i\right|}{Pez}} & \text{otherwise} \end{cases}$$

Tensile ratio at end B:

$$RTb_i := \begin{cases} \dfrac{\left|Pb_i\right|}{Pt} + \dfrac{\left|M2b_i\right|}{Multy} + \dfrac{\left|M1b_i\right|}{Multz} & \text{if } Pb_i \ge 0\cdot lbf \\ \dfrac{\left|Pb_i\right|}{Pcr} + \dfrac{\left|M2b_i\right|}{Multy}\cdot\dfrac{1}{1-\dfrac{\left|Pb_i\right|}{Pey}} + \dfrac{\left|M1b_i\right|}{Multz}\cdot\dfrac{1}{1-\dfrac{\left|Pb_i\right|}{Pez}} & \text{otherwise} \end{cases}$$

Combined Ratios:

$$RATIOa_i := \sqrt{\left(RTa_i\right)^2 + \left(RSa_i\right)^2}$$

$$RATIOb_i := \sqrt{\left(RTb_i\right)^2 + \left(RSb_i\right)^2}$$

$$RATIO_i := \text{if}\left(RATIOa_i \ge RATIOb_i, RATIOa_i, RATIOb_i\right)$$

Margin of Safety:

$$MS_i := \frac{1}{RATIO_i\cdot FS} - 1$$

$\min(MS) = 2.5$

Reference

The worst load case that yielded minimum margin of safety is shown below:

$output := augment(ID, LC, MS)$ $\qquad$ $sorted := csort(output, 3)$

$$\left(sorted^T\right)^{\langle 1 \rangle T} = (1602 \quad 4015 \quad 2.5)$$

Based upon the output of SORT function above, it reads:

Element ID = 1602

Load ID = 4015

MS = 2.5

2.2.7 PAS RICH Bracket

Margins of Safety

Table 2.2.7-1: Minimum Margin of Safety Summary

Part / Dwg Number	Part Name / Description	Material & Heat Treatment	Critical Load Condition	Failure Mode	Margin of Safety	Reference Page
SDG39135766	PAS-RICH Brackets	AL ALY 7050-T7451	On-Orbit	Max Prin. Stress	0.12 (u)	2.2.7-13

Notes:

1. Factors of Safety are 1.4 and 1.1 for Ultimate and Yield, respectively in Launch and Landing conditions. Factors of Safety are 2.0 and 1.25 for Ultimate and Yield, respectively in On-Orbit condition.
2. Boundary condition is at five Trunnion locations in Launch and Landing condition. Boundary condition is at C.G. of PAS Capture Bar and three Guide Bars in On-Orbit condition.
3. All 192 load cases of Launch and Landing and 8 load cases of On-Orbit are applied.
4. u = ultimate, y = yield

Factors of Safety

The hardware is designed with a yield factor of 1.1 and an ultimate factor of 1.4 against limit loads for Launch and Landing. It is also designed with a yield factor of 1.25 and an ultimate factor 2.0 against limit loads for On-Orbit.

Description of Structure

Figure 2.2.7-1 below shows the location of two PAS-RICH Brackets in AMS-02. The Brackets were machined out of 7050-T7451 Aluminum Alloy plate. They were riveted to Centerbody Tubes. Part of a Bracket was bolted to Payload Attach System (PAS). Another part was bolted to Ring Imaging Cherenkov Counter (RICH).

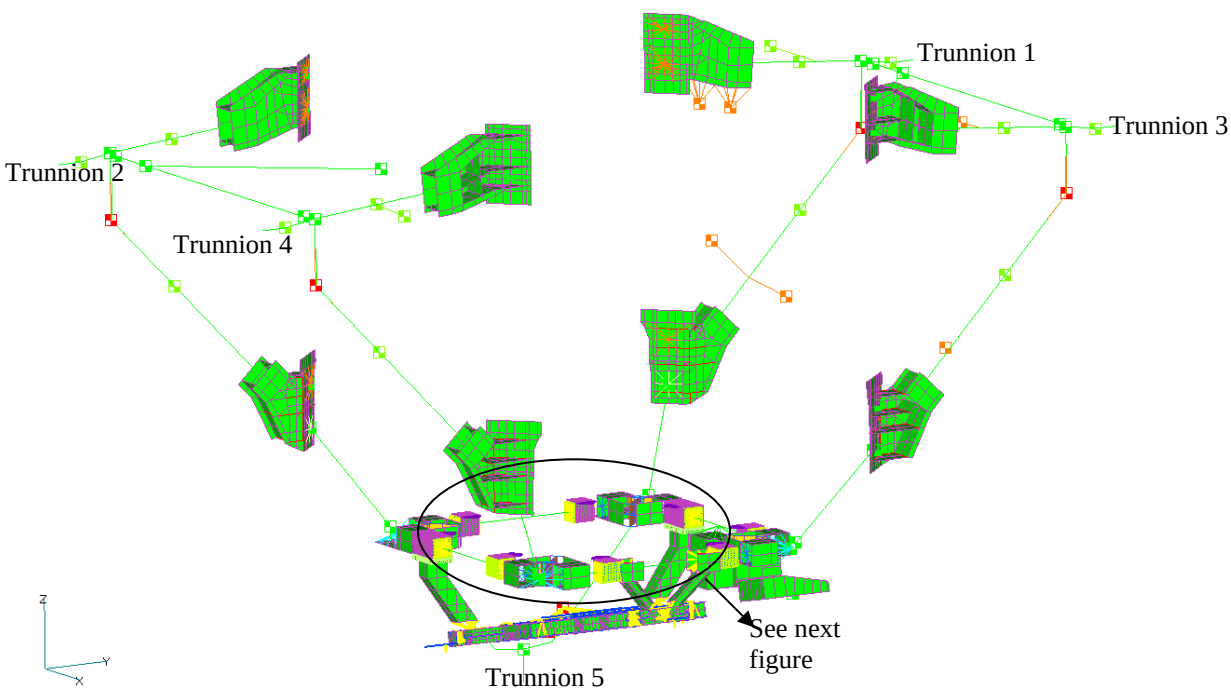

Figure 2.2.7-1: Location of PAS-RICH Brackets in AMS-02

* Note that the above figure does not show Vacuum Case for clarity.

Description of Model

A FEM model was built of the PAS-RICH Brackets using FEMAP software.

1. Parts were mainly modeled as CQUAD4 and CTRIA3 plate elements.
2. Interface of PAS-RICH brackets and PAS was CHEXA solid elements.
3. Section of Centerbody Tube, which was coupled with Brackets, was CQUAD4 plate elements.
4. All rivets was modeled as RBE2 rigid elements with DOF's 1&2 or 1&3.
5. Continuation of Centerbody Tube beam and plate elements was represented by RBE2 rigid elements with DOF's 1-6.
6. Bar elements were found at intersection between two plates.
7. RSSCON element was connector of plate to solid elements.

The model of PAS-RICH Brackets was then imported into USS2-04 load model. A built PAS model was also intergrated into the load model.

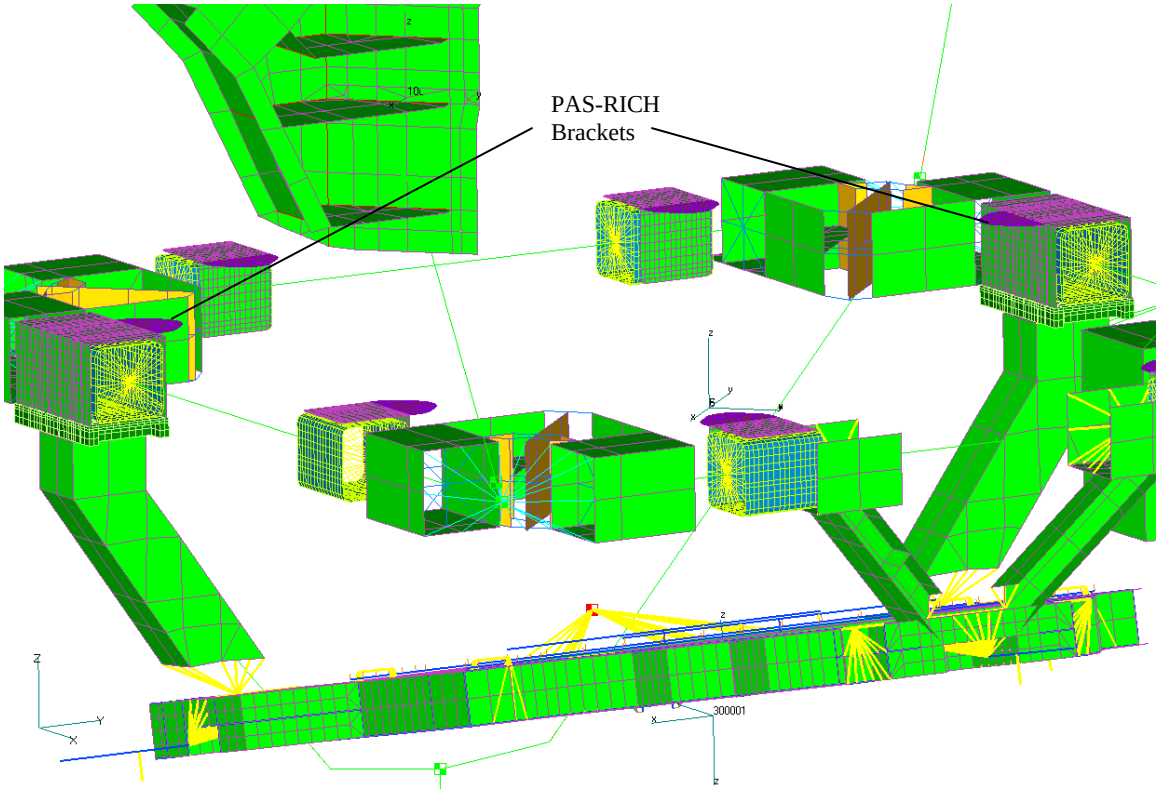

Figure 2.2.7-2: FEMAP Model of PAS-RICH Brackets

The model was constrained with DOF's 1&3 at Trunnion 1&2 (see Figure 2.2.7-1), with DOF's 3 at Trunnion 3&4, and with DOF's 2 at Trunnion 5 for Launch and Landing conditions. The model was also constrained with DOF's 3 at C.G. of PAS Capture Bar, with DOF's 236 at two rear Guide Bars, and with DOF's 136 at front Guide Bar for On-Orbit condition.

All 192 load cases for Launch and Landing, and 8 load cases for On-Orbit were applied.

MSC/NASTRAN v.2005 was used as a solver for analyzing the complete math model of AMS-02.

Plate and solid stresses were recovered and sorted to find the maximum of Principal, Von-Mises, and Shear in PAS-RICH Brackets. Forces at rivet location were also requested.

Table below shows details of model inputs.

Table 2.2.7-2: Inputs of Finite Element Model of PAS-RICH Brackets

DESCRIPTION	NODE #	ELEM #	TYPE	PROP#	MAT'L#	LC#	SPC#	COORD
pas rich bracket	200,001 - 212,802	203,001 - 204,624	plate	200,001 - 0.25" TK	200,001			
			plate	200,002 - 0.4375" TK				
		205,001 - 206,856	solid	200,021 - solid				
centerbody tube @pas rich		210,001 - 211,920	plate	200,011 - tube	200,001			
misc.								
		220,001 - 220,432	bar	200,003 - dummy	200,001			
rivets	215,001 - 215,504		rbe2					
		221,001 - 221,096	rsscon					
PAS	300,001 - 303,474	300,001 - 304,504		300,001 - 300,023	300,001 - 300,006	300,001	300,001	300,001 - 300,002

Model Checks

Rigid body checks were performed using MSC/NASTRAN. Results are shown below. The KGG, KNN and KFF matrices all pass with low strain energies.

*** USER INFORMATION MESSAGE 7570 (GPWG1D)
RESULTS OF RIGID BODY CHECKS OF MATRIX KGG (G-SET) FOLLOW:
PRINT RESULTS IN ALL SIX DIRECTIONS AGAINST THE LIMIT OF 1.000000E-02

DIRECTION	STRAIN ENERGY	PASS/FAIL
1	5.314041E-08	PASS
2	7.262543E-08	PASS
3	3.534839E-08	PASS
4	9.702608E-05	PASS
5	4.916835E-05	PASS
6	1.171079E-05	PASS

*** USER INFORMATION MESSAGE 7570 (GPWG1D)
RESULTS OF RIGID BODY CHECKS OF MATRIX KNN (N-SET) FOLLOW:
PRINT RESULTS IN ALL SIX DIRECTIONS AGAINST THE LIMIT OF 1.000000E-02

DIRECTION	STRAIN ENERGY	PASS/FAIL
1	4.694130E-08	PASS
2	7.125755E-08	PASS
3	3.189959E-08	PASS
4	8.980069E-05	PASS
5	5.375610E-05	PASS
6	2.025928E-05	PASS

*** USER INFORMATION MESSAGE 7570 (GPWG1D)
RESULTS OF RIGID BODY CHECKS OF MATRIX KNN+AUTO (N+AUTOSPC-SET) FOLLOW:
PRINT RESULTS IN ALL SIX DIRECTIONS AGAINST THE LIMIT OF 1.000000E-02

DIRECTION	STRAIN ENERGY	PASS/FAIL
1	4.694130E-08	PASS
2	7.125755E-08	PASS
3	3.189959E-08	PASS
4	8.980069E-05	PASS
5	5.375610E-05	PASS
6	2.025928E-05	PASS

```
*** USER INFORMATION MESSAGE 7570 (GPWG1D)
    RESULTS OF RIGID BODY CHECKS OF MATRIX KFF      (F-SET)  FOLLOW:
    PRINT RESULTS IN ALL SIX DIRECTIONS AGAINST THE LIMIT OF   1.000000E-02
        DIRECTION       STRAIN ENERGY       PASS/FAIL
        ---------       -------------       ---------
          1             4.694130E-08        PASS
          2             7.125755E-08        PASS
          3             3.189959E-08        PASS
          4             8.980069E-05        PASS
          5             5.375610E-05        PASS
          6             2.025928E-05        PASS

*** USER INFORMATION MESSAGE 7570 (GPWG1D)
    RESULTS OF RIGID BODY CHECKS OF MATRIX KAA1     (A-SET)  FOLLOW:
    PRINT RESULTS IN ALL SIX DIRECTIONS AGAINST THE LIMIT OF   1.000000E-02
        DIRECTION       STRAIN ENERGY       PASS/FAIL
        ---------       -------------       ---------
          1             4.694130E-08        PASS
          2             7.125755E-08        PASS
          3             3.189959E-08        PASS
          4             8.980069E-05        PASS
          5             5.375610E-05        PASS
          6             2.025928E-05        PASS
```

A further check is that of rigid body modes. The first 10 unconstrained modes are shown below. There are six rigid body modes (~ 0.0), and then good separation with the first non-rigid body mode.

Table 2.2.7-3: Eigenvalue Summary of PAS-RICH Brackets Model

R E A L E I G E N V A L U E S						
MODE NO.	EXTRACTION ORDER	EIGENVALUE	RADIANS	CYCLES	GENERALIZED MASS	GENERALIZED STIFFNESS
1	1	-1.06E-05	3.25E-03	5.18E-04	1.00E+00	-1.06E-05
2	2	-1.56E-06	1.25E-03	1.99E-04	1.00E+00	-1.56E-06
3	3	5.29E-06	2.30E-03	3.66E-04	1.00E+00	5.29E-06
4	4	6.34E-06	2.52E-03	4.01E-04	1.00E+00	6.34E-06
5	5	8.82E-06	2.97E-03	4.73E-04	1.00E+00	8.82E-06
6	6	1.12E-05	3.34E-03	5.32E-04	1.00E+00	1.12E-05
7	7	3.58E+07	5.98E+03	9.52E+02	1.00E+00	3.58E+07
8	8	5.07E+07	7.12E+03	1.13E+03	1.00E+00	5.07E+07
9	9	1.24E+08	1.12E+04	1.78E+03	1.00E+00	1.24E+08
10	10	1.69E+08	1.30E+04	2.07E+03	1.00E+00	1.69E+08

Additional check is comparision of the interface loads between the load model and the detail model. The loads are picked randomly. Loads in both models are closely matched.

Table 2.2.7-4: Interface Loads (lbf) in Load Model 2-04

Case	***64001***	***64002***	***64003***	***64004***	***64011***	***64012***	***64013***	***64014***
1005(Fx)	-10265.5	-4218.5	9910.0	7635.5	-785.8	987.6	-3250.9	1119.0
1028(Fy)	19044.8	-16676.0	3404.8	2433.2	-12722.8	7581.0	-11633.1	-519.6
2033(Fz)	-1601.8	-1942.0	645.2	437.5	-6117.5	-9489.8	-3363.9	5239.9
2047(Fx)	-1910.6	1228.8	-2868.4	-4166.4	7219.1	5784.0	3041.0	6638.5
4040(Fy)	-543.2	11872.4	8070.0	-3118.7	-1324.4	-7806.0	-6032.6	3874.0
4061(Fz)	-3360.5	-834.1	-187.7	1137.0	13878.8	-1881.9	15033.1	21524.6

Table 2.2.7-5: Interface Loads (lbf) in PAS-RICH Brackets Model

Case	***64001***	***64002***	***64003***	***64004***	***64011***	***64012***	***64013***	***64014***
1005(Fx)	-10454.2	-4312.0	10003.4	7718.2	-876.5	984.5	-3296.8	1074.5
1028(Fy)	18937.1	-16619.2	3365.7	2397.4	-12670.1	7579.1	-11506.6	-520.1
2033(Fz)	-1601.8	-1942.6	645.1	434.9	-6112.6	-9495.3	-3371.0	5249.1
2047(Fx)	-1905.3	1222.7	-2869.7	-4156.4	7248.5	5782.5	3051.6	6651.5
4040(Fy)	-535.4	11877.4	8075.0	-3112.0	-1326.9	-7798.7	-6046.1	3858.6
4061(Fz)	-3361.7	-832.2	-186.9	1132.7	13894.9	-1891.3	15009.3	21544.4

Table 2.2.7-6: Load Differences (lbf) between Two Models

Load	LOAD DIFFERENCES BETWEEN TWO MODELS							
Case	***64001***	***64002***	***64003***	***64004***	***64011***	***64012***	***64013***	***64014***
1005(Fx)	188.7	93.5	-93.4	-82.7	90.7	3.1	45.8	44.5
1028(Fy)	107.7	-56.8	39.1	35.8	-52.7	2.0	-126.4	0.5
2033(Fz)	0.0	0.6	0.1	2.6	-4.9	5.5	7.1	-9.2
2047(Fx)	-5.2	6.1	1.3	-10.0	-29.4	1.5	-10.5	-13.0
4040(Fy)	-7.8	-5.0	-5.1	-6.7	2.5	-7.4	13.5	15.4
4061(Fz)	1.2	-1.8	-0.8	4.3	-16.1	9.3	23.9	-19.8

Note: 1. Negative sign in Table 2.2.7-6 means load in Detail model greater than in Load model.

Material and Temperature

The PAS-RICH Brackets are 7050-T7451 Aluminum Alloy. Material properties of 7050-T7451 are taken from Boeing Material Specification of BMS 7-323C, and MIL-HDBK-5H. Temperature limits are based upon *ICD-2-19001 (Shuttle Orbiter / Cargo Standard Interfaces), Revision-L*. For Launch condition, the temperature of 150°F is applied. For Landing condition, the temperature of 220°F is applied. For On-Orbit condition, the temperature of 200°F is applied.

Analysis

The critical stresses for the PAS-RICH Brackets are compared to the ultimate and yield strength of 7050-T7451 Aluminum Alloy. All margins of safety are positive.

Check of PAS-RICH Brackets

Material Properties : 7050-T7451 AL ALY, BMS 7-323C or AMS 4050 *(Boeing Material Specification, BMS 7-323C, Table 1 & MIL-HDBK-5H, Table 3.7.3.0(b_1) for thickness of 5.001"-6.000")*

$F_{tu} := 67000\,psi$

$F_{ty} := 57000\,psi$

$F_{su} := 43000\,psi$

Factors of Safety, $FS_u := 1.4$ $FS_y := 1.1$ *(For Launch and Landing conditions)*

$FS_{u.o} := 2.0$ $FS_{y.o} := 1.25$ *(For On-Orbit condition)*

Table below was drawn from ICD-2-19001, 04-MAR-99. Maximum temperatures of 150 °F and 220°F for Launch and Landing respectively are selected in the analysis. Temperature of 200°F is used for On-Orbit condition.

TABLE 6.1.4.1-1 CARGO BAY WALL TEMPERATURE

CONDITION	TEMPERATURE	
	Minimum	Maximum
1. Prelaunch (1)	+40°F	+120°F
2. Launch (1)	+40°F	+150°F
3. On-Orbit (doors open) (2) (4)	-250°F	+200°F
4. Entry and Post-landing (3) (4)	-50°F	+220°F

Temperature reduction factors, *(Ref. MIL-HDBK-5H, Figure 3.7.3.2.1)*

+ At 150ºF for Launch condition:

- Ultimate: $\gamma_{u1} := 0.94$
- Yield: $\gamma_{y1} := 0.98$

+ At 220ºF for Landing condition:

$\gamma_{u2} := 0.84$

$\gamma_{y2} := 0.92$

+ At 200ºF for On-Orbit condition:

$\gamma_{u3} := 0.85$

$\gamma_{y3} := 0.93$

Allowable stresses due to Temperature Reduction Factors:

+ For Launch condition:

$F_{tu1.a} := \gamma_{u1} \cdot F_{tu}$

$F_{tu1.a} = 62980\ \text{psi}$

$F_{ty1.a} := \gamma_{y1} \cdot F_{ty}$

$F_{ty1.a} = 55860\ \text{psi}$

$F_{su1.a} := \gamma_{u1} \cdot F_{su}$

$F_{su1.a} = 40420\ \text{psi}$

+ For Landing condition:

$F_{tu2.a} := \gamma_{u2} \cdot F_{tu}$

$F_{tu2.a} = 56280\ \text{psi}$

$F_{ty2.a} := \gamma_{y2} \cdot F_{ty}$

$F_{ty2.a} = 52440\ \text{psi}$

$F_{su2.a} := \gamma_{u2} \cdot F_{su}$

$F_{su2.a} = 36120\ \text{psi}$

+ For On-Orbit condition:

$F_{tu3.a} := \gamma_{u3} \cdot F_{tu}$

$F_{tu3.a} = 56950\ \text{psi}$

$F_{ty3.a} := \gamma_{y3} \cdot F_{ty}$

$F_{ty3.a} = 53010\ \text{psi}$

$F_{su3.a} := \gamma_{u3} \cdot F_{su}$

$F_{su3.a} = 36550\ \text{psi}$

Maximum Von-Mises, principal, and shear stresses of both plate and solid elements are selected from 192 load cases for Launch and Landing, and 8 cases for On-Orbit. NASPOST V.2.1 is used to sort out the maximum stresses within the load cases.

+ For Launch condition: *(Stress contour plot shown in Figure 2.2.7-3)*

$\sigma_{uu1.max} := 27544 \cdot psi$ *(LC# 1019, ELEM# 203830; p.A9-3)*

$\sigma_{uy1.max} := 24568 \cdot psi$ *(LC# 1019, ELEM# 203830; p.A9-3)*

$\sigma_{us1.max} := 13772 \cdot psi$ *(LC# 1019, ELEM# 203830; p.A9-3)*

+ For Landing condition: *(Stress contour plot shown in Figure 2.2.7-4)*

$\sigma_{uu2.max} := 23572 \cdot psi$ *(LC# 4019, ELEM# 203830; p.A9-7)*

$\sigma_{uy2.max} := 21068 \cdot psi$ *(LC# 4019, ELEM# 203830; p.A9-7)*

$\sigma_{us2.max} := 11786 \cdot psi$ *(LC# 4019, ELEM# 203830; p.A9-7)*

+ For On-Orbit condition: *(Stress contour plot shown in Figure 2.2.7-5)*

$\sigma_{uu3.max} := 25377 \cdot psi$ *(LC# 200008, ELEM# 203779; p.A9-13)*

$\sigma_{uy3.max} := 22971 \cdot psi$ *(LC# 200008, ELEM# 203779; p.A9-13)*

$\sigma_{us3.max} := 12688 \cdot psi$ *(LC# 200008, ELEM# 203779; p.A9-13)*

The values shown above are maximum stresses.

Note that higher stresses in solid elements can be found in Appendix A9 (p.A9-11 & 12, pp.A9-15 - A9.19). These values are bold. The stresses are artificially high due to RBE2 connection. Therefore, they are not used to perform the stress analysis of PAS-RICH Bracket.

Margins of Safety,

+ For Launch condition:

$$MS_{u1} := \frac{F_{tu1.a}}{FS_u \cdot \sigma_{uu1.max}} - 1 \qquad MS_{u1} = 0.63$$

$$MS_{y1} := \frac{F_{ty1.a}}{FS_y \cdot \sigma_{uy1.max}} - 1 \qquad MS_{y1} = 1.07$$

$$MS_{s1} := \frac{F_{su1.a}}{FS_u \cdot \sigma_{us1.max}} - 1 \qquad MS_{s1} = 1.1$$

+ For Landing condition:

$$MS_{u2} := \frac{F_{tu2.a}}{FS_u \cdot \sigma_{uu2.max}} - 1 \qquad MS_{u2} = 0.71$$

$$MS_{y2} := \frac{F_{ty2.a}}{FS_y \cdot \sigma_{uy2.max}} - 1 \qquad MS_{y2} = 1.26$$

$$MS_{s2} := \frac{F_{su2.a}}{FS_u \cdot \sigma_{us2.max}} - 1 \qquad MS_{s2} = 1.19$$

+ For On-Orbit condition:

$$MS_{u3} := \frac{F_{tu3.a}}{FS_{u.o} \cdot \sigma_{uu3.max}} - 1 \qquad MS_{u3} = 0.12$$

$$MS_{y3} := \frac{F_{ty3.a}}{FS_{y.o} \cdot \sigma_{uy3.max}} - 1 \qquad MS_{y3} = 0.85$$

$$MS_{s3} := \frac{F_{su3.a}}{FS_{u.o} \cdot \sigma_{us3.max}} - 1 \qquad MS_{s3} = 0.44$$

Prepared By	Name	Date		File Name
	Peter Hoang	05/11/05		stressPR.mcd
Checked By	John Krejci	05/23/05	**Engineering and Science Contract Group** *Structural Analysis Section*	Drawing No. SDG39135766
Title	AMS-02 PAS RICH BRACKET			

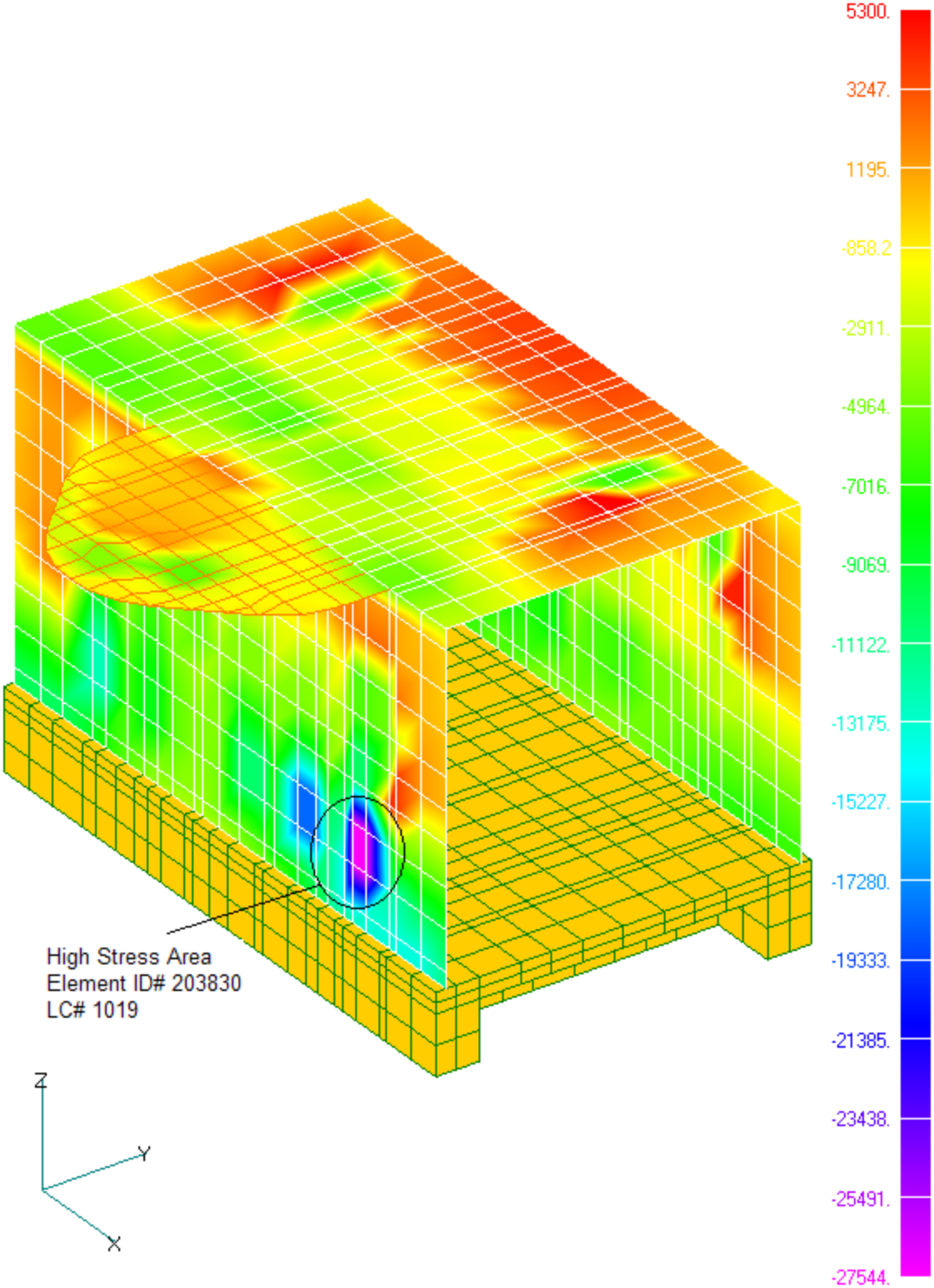

Figure 2.2.7-3: Stress Contour Plot of PAS-RICH Brackets in Launch Condition

Prepared By	Name	Date		File Name
	Peter Hoang	05/11/05	**Engineering and Science Contract Group**	stressPR.mcd
Checked By	John Krejci	05/23/05	*Structural Analysis Section*	Drawing No. SDG39135766
Title	AMS-02 PAS RICH BRACKET			

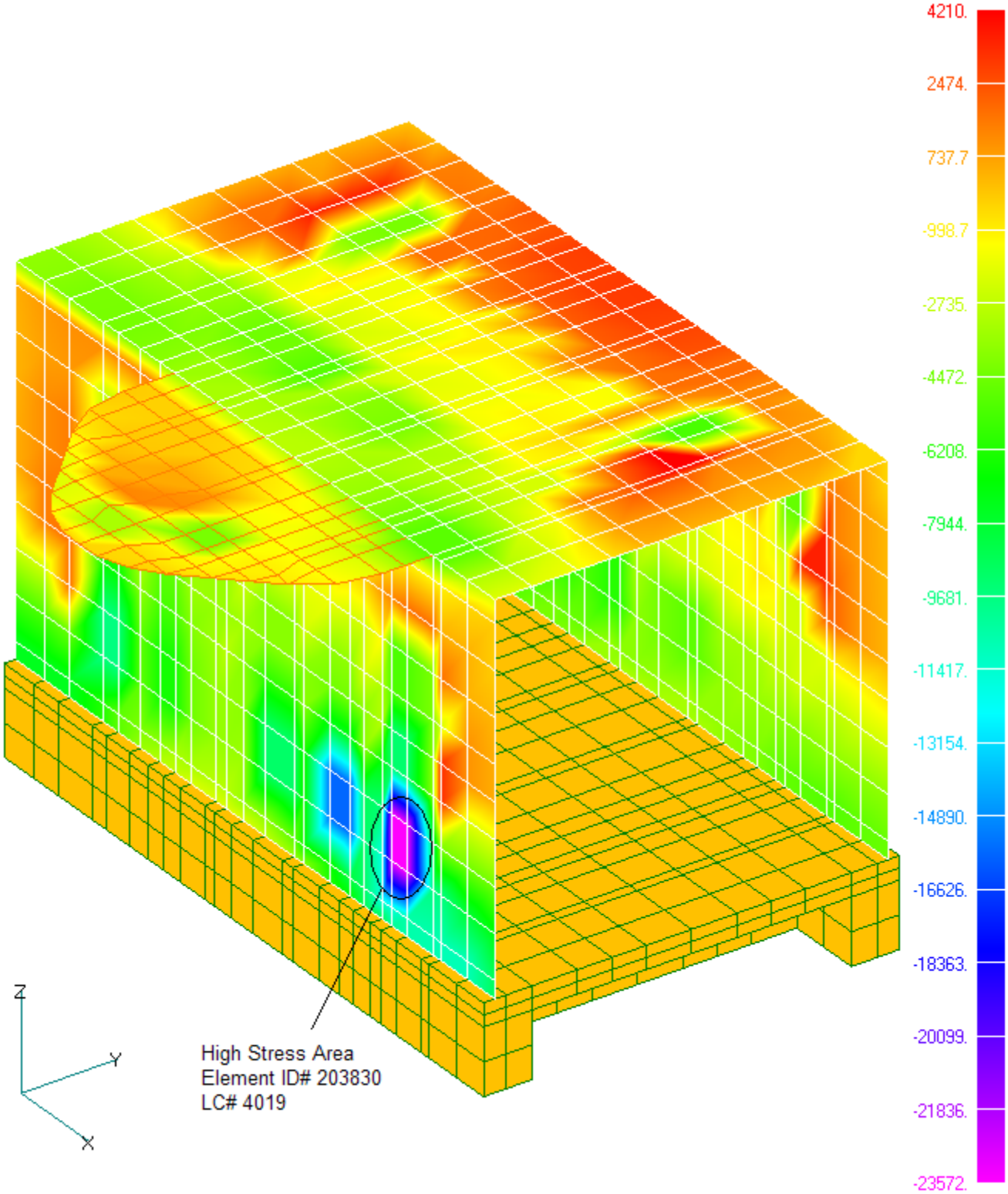

Figure 2.2.7-4: Stress Contour Plot of PAS-RICH Brackets in Landing Condition

Prepared By	Name	Date		File Name
	Peter Hoang	05/11/05	**Engineering and Science Contract Group**	stressPR.mcd
Checked By	John Krejci	05/23/05	*Structural Analysis Section*	Drawing No. SDG39135766
Title	AMS-02 PAS RICH BRACKET			

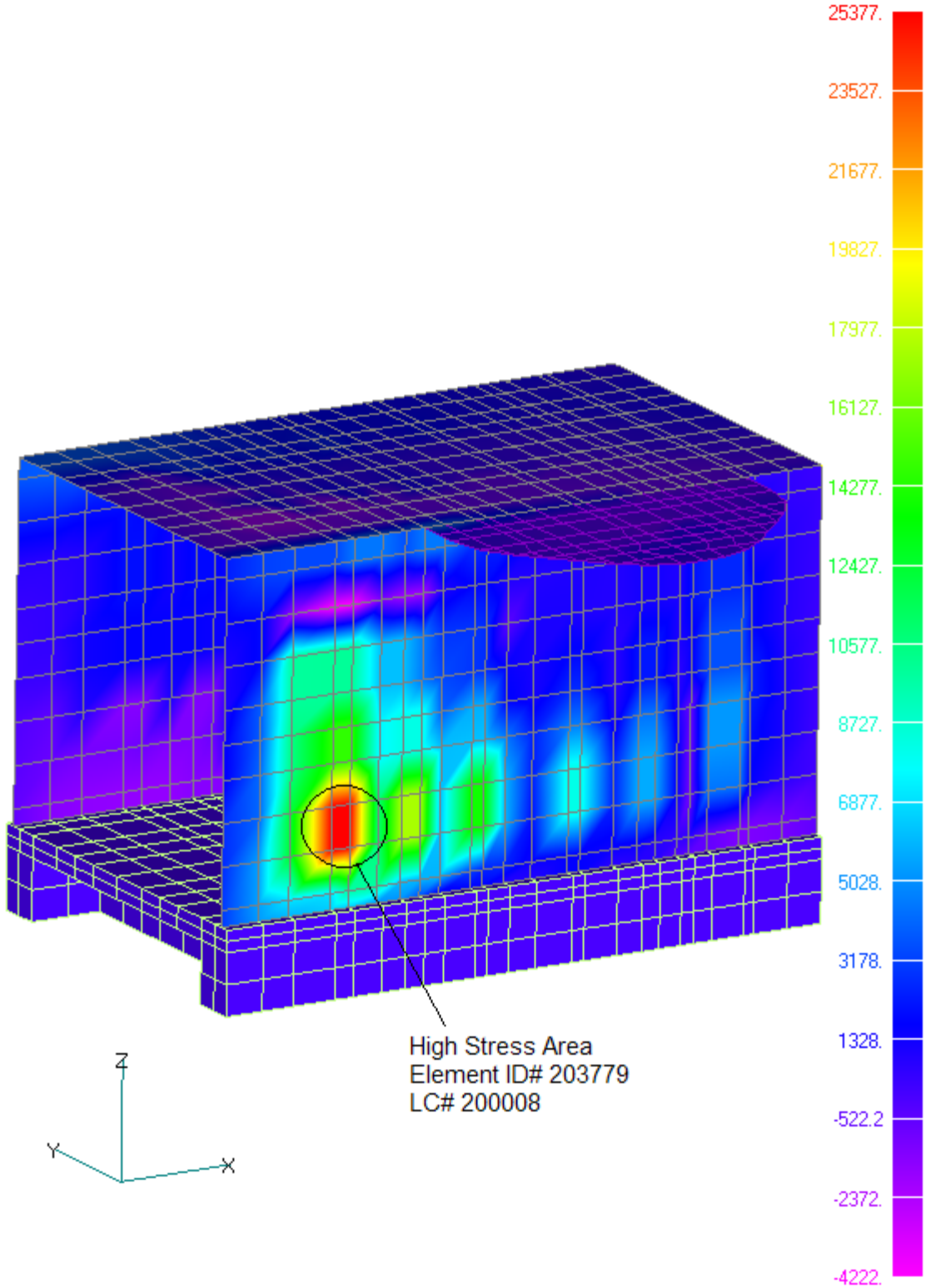

Figure 2.2.7-5: Stress Contour Plot of PAS-RICH Brackets in On-Orbit Condition

2.2.8 Lower Angle Beam Flange

The Lower Angle Beam Flange is part of the Lower Center Body Assembly. Section 2.2.1 of this report covers the Lower Center Body Assembly, where both the Lower Centerbody Joint and the Lower Angle Beam flange is analyzed.

The Lower Centerbody Assembly is shown in the USS-02 Assembly in figure 2.2.8-1. The Lower Angle Beam Flange is shown in Figure 2.2.8-2.

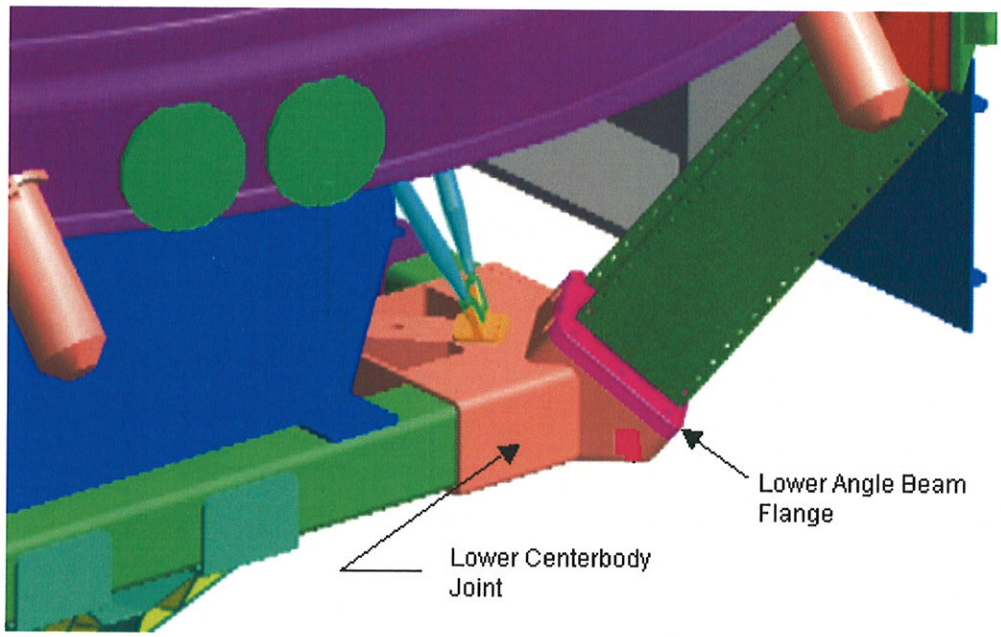

Figure 2.2.8-1, Lower Centerbody Assembly

Prepared By	Name	Date		File Name
	Howard Carter	02/14/06	Engineering and Science Contract Group	Low er Angle Beam Flange
Checked By	Chittur Bala	2/17/06	*Structural Analysis Section*	Draw ing No. SEG39135767
Title	USS-02 Lower Angle Beam Flange			

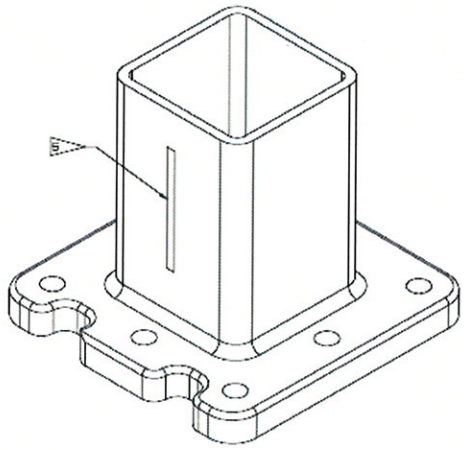

Figure 2.2.8-2, Lower Angle Beam Flange

The Lower Angle Beam Flange is made of 7050-T7451, per BMS-7-323C

Looking at the contour plots on pages 2.2.1-15 thru 2.2.1-17, high stresses in the Lower Center Body Assembly occur in the Lower Angle Beam Flange.

From page 2.2.1-14, the minimum margins are:

MSu = 0.185	max principal, Load Case 2058
MSy = 0.397	max yield (von mises), Load Case 2015
MSs = 0.44	max shear, Load Case 2015

Factors of safey are

FSu = 1.4	ultimate
FSy = 1.1	yield

2.3 Keel Assembly

2.3.1 Keel Angle Joint

PART: 4.5"x4.5" Tube, 1/4 in. Thick,
From 6" Plate

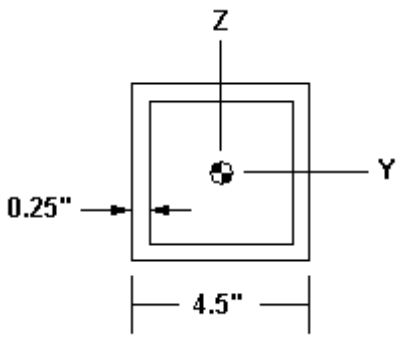

Beam Cross Section

$t := 0.25 \cdot in$ Tube thickness

$a := 4.5 \cdot in$ Cross sectional height

$b := a - 2 \cdot t$ Internal height

$A := 4.09 \cdot in^2$ Cross-sectional area, Ref.Steel Manual, p3-43

$Am := (a - t)^2$ $Am = 18.063 in^2$ Enclosure area

$I_y := 12.1 \cdot in^4$ $c_z := 2.25 \cdot in$ (Reference Structural Steel Manual, p. 3-43)

$I_z := 12.1 \cdot in^4$ $c_y := 2.25 \cdot in$

ANALYSIS:
Shear and Bending, (Based on local beam coordinate system)

Loads: The highest axial forces and moments were determined through the "naspost" subroutine. The top two load cases, one with the highest bending moment and other with the highest axial load, were used to calculated the minimum Margin of Safety (Reference Subcases 2037and 2045, ID 1306 and 1305, Appendix A7-4 and A7-6).

$F_z := -1385 \cdot lbf$ $F_y := -1083 \cdot lbf$ $P := 2.4118 \cdot 10^4 \cdot lbf$

$M_y := -3.4133 \cdot 10^4 \cdot in \cdot lbf$ $M_z := -2.9256 \cdot 10^4 \cdot in \cdot lbf$ $T := -728 \cdot in \cdot lbf$

Stresses on cross section:

Normal is direct axial plus bending: $\sigma := \frac{|P|}{A} + \frac{|M_y| \cdot c_z}{I_y} + \frac{|M_z| \cdot c_y}{I_z}$ $\sigma = 1.768 \times 10^4 \text{ psi}$

Shear due to tranverse loading: $\tau_{transv} := \frac{\sqrt{F_z^2 + F_y^2}}{A}$ $\tau_{transv} = 429.867 \text{ psi}$

Shear due to torsion:
(Reference: Blodgett, Omer W., *Design of Welded Structures*, 1966; James F. Lincoln Arc Welding Foundation, pg. 2.10-2.)

$PMOD := 2 \cdot t \cdot Am$

$PMOD = 9.031 \text{ in}^3$

$\tau_{torsion} := \frac{|T|}{PMOD}$ $\tau_{torsion} = 80.609 \text{ psi}$

Combined shear: $\tau := \tau_{transv} + \tau_{torsion}$ $\tau = 510.476 \text{ psi}$

Maximum Shear Stress: $\tau_{max} := \sqrt{\frac{1}{4} \cdot \sigma^2 + \tau^2}$ $\tau_{max} = 8.857 \times 10^3 \text{ psi}$

Principal Stresses: $\sigma p_1 := \frac{\sigma}{2} + \left[\left(\frac{\sigma}{2}\right)^2 + \tau^2\right]^{\frac{1}{2}}$ $\sigma p_1 = 1.77 \times 10^4 \text{ psi}$

$\sigma p_2 := \frac{\sigma}{2} - \left[\left(\frac{\sigma}{2}\right)^2 + \tau^2\right]^{\frac{1}{2}}$ $\sigma p_2 = -14.723 \text{ psi}$

Maximum principal stress is: $\sigma_{max} := \max\left(\overrightarrow{|\sigma p|}\right)$ $\sigma_{max} = 1.77 \times 10^4 \text{ psi}$

Von-Mises Stress: $\sigma_{vm} := \sqrt{(\sigma p_1)^2 + (\sigma p_2)^2 - \sigma p_1 \cdot \sigma p_2}$ $\sigma_{vm} = 1.771 \times 10^4 \text{ psi}$

Material Properties: Al Alloy 7050-T7451, 6 in. Thk Plate. Thermal knockdown included
(Reference: MIL--HDBK-5H, Table 3.7.3.0(b1), Page 3-308)

$Ftu := 70000 \cdot 0.92 \cdot psi$ $\quad Fty := 60000 \cdot 0.98 \cdot psi$ $\quad Fsu := 43000 \cdot 0.92 \cdot psi$

Factors of safety:

$FSu := 1.4$ $\quad FSy := 1.1$

Margins of safety:

Ultimate (using principal) $\quad MSu := \left(\frac{Ftu}{FSu \cdot \sigma_{max}}\right) - 1$ $\quad MSu = 1.599$

Yield (using Von-Mises) $\quad MSy := \left(\frac{Fty}{FSy \cdot \sigma_{vm}}\right) - 1$ $\quad MSy = 2.019$

Shear $\quad MS\tau := \left(\frac{Fsu}{FSu \cdot \tau_{max}}\right) - 1$ $\quad MS\tau = 2.19$

2.3.2 Keel Block

Margins of Safety

Table 2.3.2-1: Minimum Margin of Safety Summary

Part / Dwg Number	Part Name / Description	Material & Heat Treatment	Critical Load Condition	Failure Mode	Margin of Safety	Reference Page
SDG39135770	Keel Block Assembly, Keel Assembly	AL ALY 7050-T7451	Launch	Max Prin. Stress	0.63 (u)	2.3.2-13

Notes:

1. Factors of Safety are 1.4 for Ultimate and 1.1 for Yield.
2. Boundary condition is at five Trunnion locations.
3. All 192 load cases of Launch and Landing are applied.
4. u = ultimate, y = yield

Factors of Safety

The hardware is designed with a yield factor of 1.1 and an ultimate factor of 1.4 against limit loads for Launch and Landing.

Description of Structure

Figure 2.3.2-1 below shows the location of Keel Block in AMS-02. The Block was machined out of 7050-T7451 Aluminum Alloy plate. Part of the Block was riveted to Keel Tubes. The Keel Trunnion was also mounted to Keel Block.

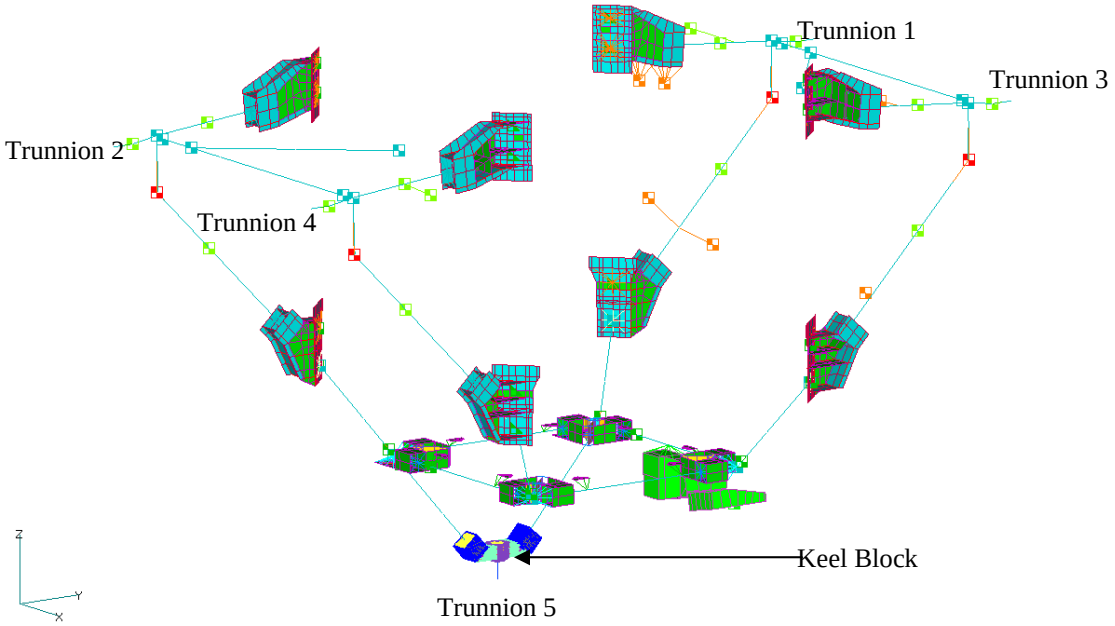

Figure 2.3.2-1: Location of Keel Block in AMS-02

* Note that the above figure does not show Vacuum Case for clarity.

Description of Model

A FEM model was built of the Keel Block hardware using FEMAP software.

1. Parts were mainly modeled as CHEXA and CPENTA solid elements.
2. The contact surfaces of Keel Tube and Keel Trunnion to Keel Block are represented by RBE2 rigid elements with DOF's 1-6.

The model of Keel Block was then imported into USS7-03 load model.

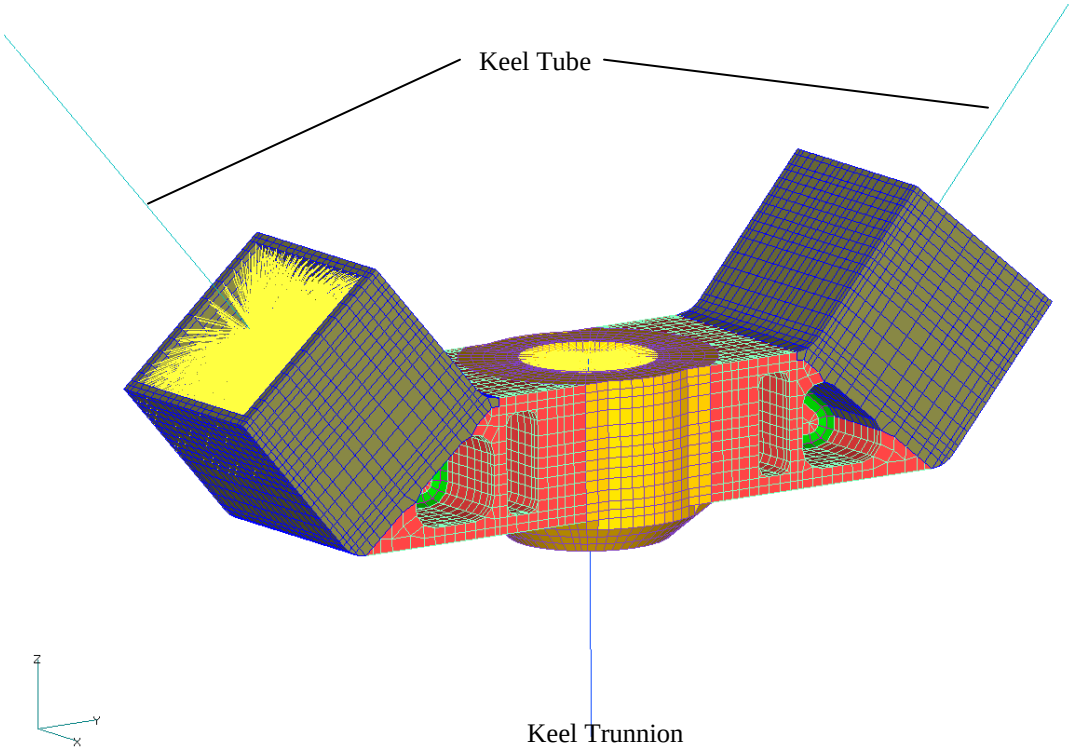

Figure 2.3.2-2: FEMAP Model of Keel Block

The model was then constrained with DOF's 1&3 at Trunnion 1&2 (see Figure 2.3.2-1), with DOF's 3 at Trunnion 3&4, and with DOF's 2 at Trunnion 5.

All 192 load cases for Launch and Landing were applied.

MSC/NASTRAN v.2005 was used as a solver for analyzing the complete math model of AMS-02.

Solid stresses were recovered and sorted to find the maximum of Principal, Von-Mises, and Shear in Keel Block.

Table below shows detail of model inputs.

Table 2.3.2-2: Inputs of Finite Element Model of Keel Block

DESCRIPTION	NODE #	ELEM #	TYPE	PROP	MAT'L
	200,001 - 220,981				
Keel Block		200,001 - 223,667	solid	200,001	200,001
RBE2 connection		223,668 - 223,737	rigid		

Model Checks

Rigid body checks were performed using MSC/NASTRAN. Results are shown below. The KGG, KNN and KFF matrices all pass with low strain energies.

```
*** USER INFORMATION MESSAGE 7570 (GPWG1D)
    RESULTS OF RIGID BODY CHECKS OF MATRIX KGG      (G-SET)  FOLLOW:
    PRINT RESULTS IN ALL SIX DIRECTIONS AGAINST THE LIMIT OF   1.000000E-02
        DIRECTION       STRAIN ENERGY       PASS/FAIL
        ---------       -------------       ---------
          1             1.005562E-07        PASS
          2             4.503818E-09        PASS
          3             3.400719E-08        PASS
          4             1.999544E-06        PASS
          5             8.180187E-07        PASS
          6             3.117114E-07        PASS
```

```
*** USER INFORMATION MESSAGE 7570 (GPWG1D)
    RESULTS OF RIGID BODY CHECKS OF MATRIX KNN      (N-SET)  FOLLOW:
    PRINT RESULTS IN ALL SIX DIRECTIONS AGAINST THE LIMIT OF   1.000000E-02
        DIRECTION       STRAIN ENERGY       PASS/FAIL
        ---------       -------------       ---------
          1             7.793212E-06        PASS
          2             2.522567E-06        PASS
          3             8.568881E-07        PASS
          4             3.527135E-04        PASS
          5             1.834738E-05        PASS
          6             4.322931E-04        PASS
```

```
*** USER INFORMATION MESSAGE 7570 (GPWG1D)
    RESULTS OF RIGID BODY CHECKS OF MATRIX KNN+AUTO (N+AUTOSPC-SET)  FOLLOW:
    PRINT RESULTS IN ALL SIX DIRECTIONS AGAINST THE LIMIT OF   1.000000E-02
        DIRECTION       STRAIN ENERGY       PASS/FAIL
        ---------       -------------       ---------
          1             7.793212E-06        PASS
          2             2.522567E-06        PASS
          3             8.568881E-07        PASS
          4             3.527135E-04        PASS
          5             1.834738E-05        PASS
          6             4.322931E-04        PASS
```

```
*** USER INFORMATION MESSAGE 7570 (GPWG1D)
    RESULTS OF RIGID BODY CHECKS OF MATRIX KFF      (F-SET)  FOLLOW:
    PRINT RESULTS IN ALL SIX DIRECTIONS AGAINST THE LIMIT OF   1.000000E-02
        DIRECTION       STRAIN ENERGY       PASS/FAIL
        ---------       -------------       ---------
          1             7.793212E-06        PASS
          2             2.522567E-06        PASS
          3             8.568881E-07        PASS
          4             3.527135E-04        PASS
          5             1.834738E-05        PASS
          6             4.322931E-04        PASS
```

```
*** USER INFORMATION MESSAGE 7570 (GPWG1D)
    RESULTS OF RIGID BODY CHECKS OF MATRIX KAA1     (A-SET)  FOLLOW:
    PRINT RESULTS IN ALL SIX DIRECTIONS AGAINST THE LIMIT OF   1.000000E-02
        DIRECTION       STRAIN ENERGY       PASS/FAIL
        ---------       -------------       ---------
          1             7.793212E-06        PASS
          2             2.522567E-06        PASS
          3             8.568881E-07        PASS
          4             3.527135E-04        PASS
          5             1.834738E-05        PASS
          6             4.322931E-04        PASS
```

A further check is that of rigid body modes. The first 10 unconstrained modes are shown below. There are six rigid body modes (~ 0.0), and then good separation with the first non-rigid body mode.

Table 2.3.2-3: Eigenvalues of Finite Element Model of Keel Block

R E A L E I G E N V A L U E S						
MODE NO.	EXTRACTION ORDER	EIGENVALUE	RADIANS	CYCLES	GENERALIZED MASS	GENERALIZED STIFFNESS
1	1	-1.08E-04	1.04E-02	1.65E-03	1.00E+00	-1.08E-04
2	2	-4.72E-05	6.87E-03	1.09E-03	1.00E+00	-4.72E-05
3	3	-2.07E-05	4.55E-03	7.25E-04	1.00E+00	-2.07E-05
4	4	1.49E-06	1.22E-03	1.95E-04	1.00E+00	1.49E-06
5	5	3.69E-05	6.08E-03	9.67E-04	1.00E+00	3.69E-05
6	6	1.99E-04	1.41E-02	2.25E-03	1.00E+00	1.99E-04
7	7	3.28E+07	5.72E+03	9.11E+02	1.00E+00	3.28E+07
8	8	6.82E+07	8.26E+03	1.31E+03	1.00E+00	6.82E+07
9	9	7.58E+07	8.71E+03	1.39E+03	1.00E+00	7.58E+07
10	10	1.27E+08	1.13E+04	1.79E+03	1.00E+00	1.27E+08

Additional check is comparision of the interface loads between the load model and the detail model. The loads are picked randomly. Loads in both models are closely matched.

Table 2.3.2-4: Interface loads (lbf) in Load Model 2-04

Case	***64001***	***64002***	***64003***	***64004***	***64011***	***64012***	***64013***	***64014***
1005(Fx)	-10265.5	-4218.5	9910.0	7635.5	-785.8	987.6	-3250.9	1119.0
1028(Fy)	19044.8	-16676.0	3404.8	2433.2	-12722.8	7581.0	-11633.1	-519.6
2033(Fz)	-1601.8	-1942.0	645.2	437.5	-6117.5	-9489.8	-3363.9	5239.9
2047(Fx)	-1910.6	1228.8	-2868.4	-4166.4	7219.1	5784.0	3041.0	6638.5
4040(Fy)	-543.2	11872.4	8070.0	-3118.7	-1324.4	-7806.0	-6032.6	3874.0
4061(Fz)	-3360.5	-834.1	-187.7	1137.0	13878.8	-1881.9	15033.1	21524.6

Table 2.3.2-5: Interface loads (lbf) in Keel-Block Model

Case	***64001***	***64002***	***64003***	***64004***	***64011***	***64012***	***64013***	***64014***
1005(Fx)	-10205.2	-4178.2	9881.9	7602.6	-771.5	982.3	-3232.2	1118.7
1028(Fy)	19032.8	-16667.3	3398.6	2435.0	-12715.2	7581.8	-11624.2	-524.6
2033(Fz)	-1601.3	-1944.3	643.9	437.6	-6115.7	-9485.5	-3366.4	5240.1
2047(Fx)	-1907.9	1231.8	-2869.8	-4167.2	7212.2	5781.8	3043.6	6637.6
4040(Fy)	-541.9	11875.5	8071.5	-3117.9	-1316.2	-7819.1	-6032.0	3872.7
4061(Fz)	-3361.7	-834.2	-189.1	1137.0	13883.4	-1879.2	15034.2	21519.2

Table 2.3.2-6: Load Differences (lbf) Between Two Models

Case	***64001***	***64002***	***64003***	***64004***	***64011***	***64012***	***64013***	***64014***
1005(Fx)	-60.3	-40.3	28.1	32.9	-14.3	5.3	-18.7	0.4
1028(Fy)	12.0	-8.7	6.2	-1.8	-7.7	-0.8	-8.8	4.9
2033(Fz)	-0.5	2.3	1.3	-0.1	-1.8	-4.2	2.6	-0.3
2047(Fx)	-2.6	-3.0	1.4	0.8	6.9	2.1	-2.5	0.9
4040(Fy)	-1.3	-3.1	-1.5	-0.8	-8.2	13.0	-0.6	1.3
4061(Fz)	1.2	0.1	1.3	0.1	-4.6	-2.8	-1.1	5.4

Note:

1. Negative sign in Table 2.3.2-6 means load in Keel-Block model greater than in Load model.

Material and Temperature

The Keel Block is 7050-T7451 Aluminum Alloy. Material property of 7050-T7451 are taken from Boeing Material Specification of BMS 7-323C, and MIL-HDBK-5H. Temperature limits are based upon *ICD-2-19001 (Shuttle Orbiter / Cargo Standard Interfaces), Revision-L.* For Launch condition, the temperature of 150°F is applied. For Landing condition, the temperature of 220°F is applied.

Analysis

The critical stresses for the Keel Block are compared to the ultimate and yield strength of 7050-T7451 Aluminum Alloy. All margins of safety are positive.

Check of Keel Block

Material Properties : 7050-T7451 AL ALY, BMS 7-323C or AMS 4050 *(Boeing Material Specification, BMS 7-323C, Table 1 & MIL-HDBK-5H, Table 3.7.3.0(b_1) for thickness of 4.001"-5.000")*

$F_{tu} := 67000\,psi$

$F_{ty} := 57000 \cdot psi$

$F_{su} := 43000 \cdot psi$

Factors of Safety, $FS_u := 1.4$ $FS_y := 1.1$ *(For Launch and Landing conditions)*

Table below was drawn from ICD-2-19001, 04-MAR-99. Maximum temperatures of 150 °F and 220°F for Launch and Landing respectively are selected in the analysis.

TABLE 6.1.4.1-1 CARGO BAY WALL TEMPERATURE

CONDITION	TEMPERATURE	
	Minimum	Maximum
1. Prelaunch (1)	+40°F	+120°F
2. Launch (1)	+40°F	+150°F
3. On-Orbit (doors open) (2) (4)	-250°F	+200°F
4. Entry and Post-landing (3) (4)	-50°F	+220°F

Temperature reduction factors, *(Ref. MIL-HDBK-5H, Figure 3.7.3.2.1)*

+ At 150ºF for Launch condition:

- Ultimate: $\gamma_{u1} := 0.91$

- Yield: $\gamma_{y1} := 0.97$

+ At 220ºF for Landing condition:

$\gamma_{u2} := 0.82$

$\gamma_{y2} := 0.90$

Allowable stresses due to Temperature Reduction Factors:

+ For Launch condition:

$F_{tu1.a} := \gamma_{u1} \cdot F_{tu}$

$F_{tu1.a} = 60970\ \text{psi}$

$F_{ty1.a} := \gamma_{y1} \cdot F_{ty}$

$F_{ty1.a} = 55290\ \text{psi}$

$F_{su1.a} := \gamma_{u1} \cdot F_{su}$

$F_{su1.a} = 39130\ \text{psi}$

+ For Landing condition:

$F_{tu2.a} := \gamma_{u2} \cdot F_{tu}$

$F_{tu2.a} = 54940\ \text{psi}$

$F_{ty2.a} := \gamma_{y2} \cdot F_{ty}$

$F_{ty2.a} = 51300\ \text{psi}$

$F_{su2.a} := \gamma_{u2} \cdot F_{su}$

$F_{su2.a} = 35260\ \text{psi}$

Maximum Von-Mises, Principal, and Shear stresses of solid elements are selected from 192 load cases for Launch and Landing. NASPOST V.2.1 is used to sort out the maximum stresses within the load cases.

+ For Launch condition: *(Stress contour plot shown in Figure 2.3.2-3)*

$\sigma_{uu1.max} := 26748 \cdot psi$ *(LC# 1056, ELEM# 219048; p.A10-4)*

$\sigma_{uy1.max} := 22777 \cdot psi$ *(LC# 1056, ELEM# 222463; p.A10-5)*

$\sigma_{us1.max} := 12895 \cdot psi$ *(LC# 1056, ELEM# 222463; p.A10-7)*

+ For Landing condition: *(Stress contour plot shown in Figure 2.3.2-4)*

$\sigma_{uu2.max} := 17424 \cdot psi$ *(LC# 4050, ELEM# 219048; p.A10-12)*

$\sigma_{uy2.max} := 15028 \cdot psi$ *(LC# 4053, ELEM# 218863; p.A10-16)*

$\sigma_{us2.max} := 8378 \cdot psi$ *(LC# 4050, ELEM# 222463; p.A10-15)*

The values shown above are maximum stresses.

Note that higher stresses can be found in Appendix A10. These values are bold. The stresses are artificially high due to RBE2 connection. Therefore, they are not used to perform the stress analysis of Keel Block.

Margins of Safety,

+ For Launch condition:

$$MS_{u1} := \frac{F_{tu1.a}}{FS_u \cdot \sigma_{uu1.max}} - 1 \qquad MS_{u1} = 0.63$$

$$MS_{y1} := \frac{F_{ty1.a}}{FS_y \cdot \sigma_{uy1.max}} - 1 \qquad MS_{y1} = 1.21$$

$$MS_{s1} := \frac{F_{su1.a}}{FS_u \cdot \sigma_{us1.max}} - 1 \qquad MS_{s1} = 1.17$$

+ For Landing condition:

$$MS_{u2} := \frac{F_{tu2.a}}{FS_u \cdot \sigma_{uu2.max}} - 1 \qquad MS_{u2} = 1.25$$

$$MS_{y2} := \frac{F_{ty2.a}}{FS_y \cdot \sigma_{uy2.max}} - 1 \qquad MS_{y2} = 2.1$$

$$MS_{s2} := \frac{F_{su2.a}}{FS_u \cdot \sigma_{us2.max}} - 1 \qquad MS_{s2} = 2.01$$

Prepared By	Name	Date		File Name
	Peter Hoang	05/11/05	**Engineering and Science Contract Group**	keelbk.mcd
Checked By	John Krejci	05/27/05	*Structural Analysis Section*	Drawing No. SDG39135770
Title	**AMS-02 KEEL BLOCK**			

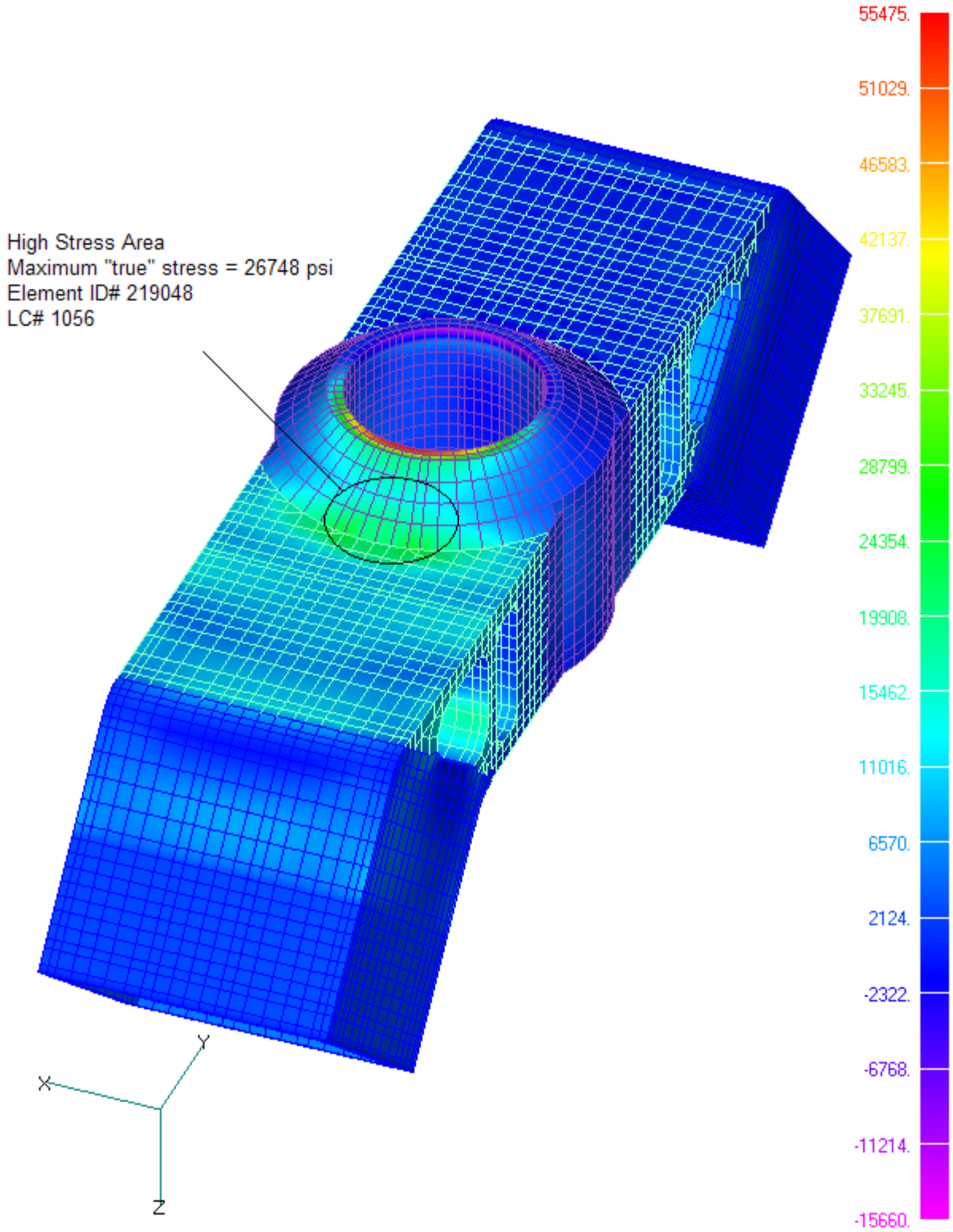

Figure 2.3.2-3: Stress Contour Plot of Keel Block in Launch Condition

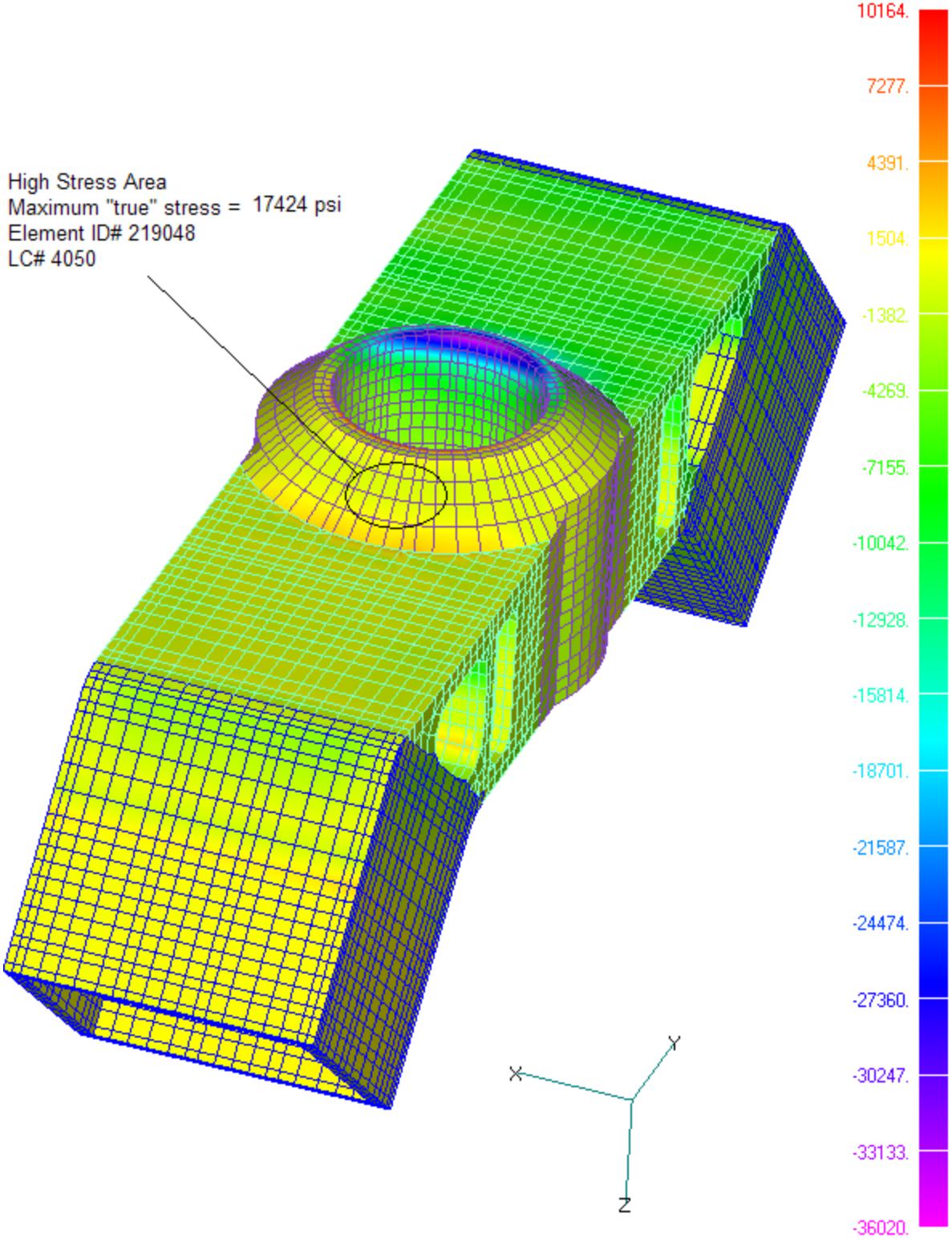

Figure 2.3.2-4: Stress Contour Plot of Keel Block in Landing Condition

2.3.3 Keel Tube

Keel Tube

Drawings no.: SDG39135771
Units used: in, lbf

The objective of this analysis is to demonstrate the structural strength of the **Keel Tube**. The **Keel Tube** (SDG39135771) is mounted between the **Keel Angle Joint** (SDG39135769) and **Keel Block** (SDG39135770).

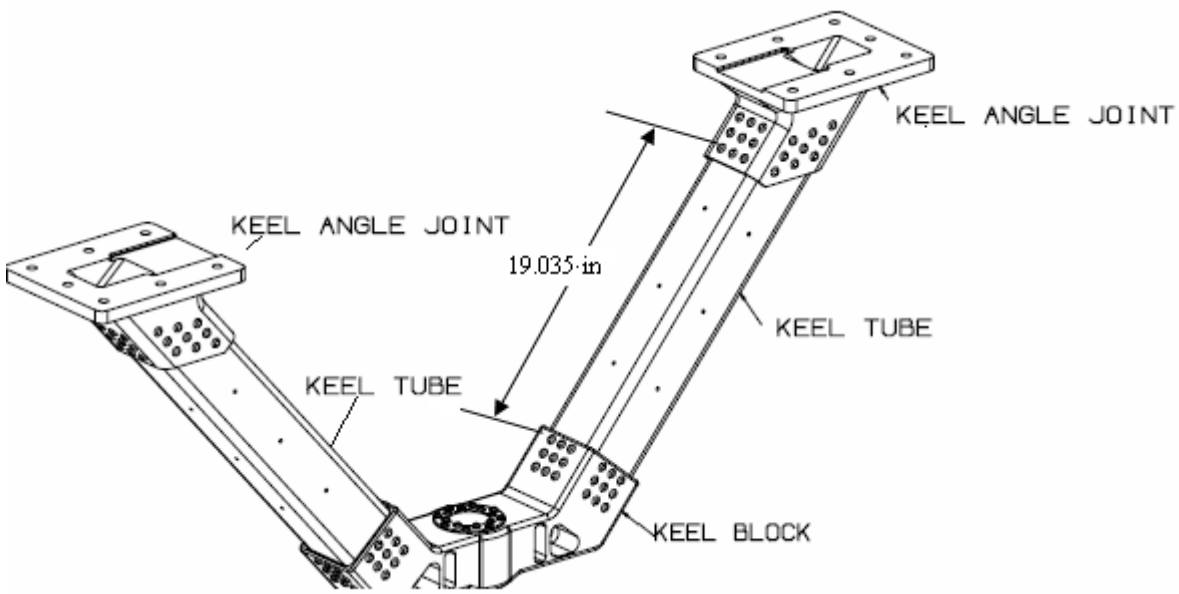

a) Keel Tube Location

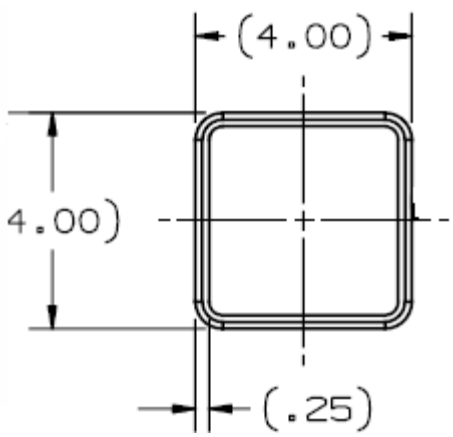

b) Cross section

Figure 2.3.3-1 Keel Tube

Factor of Safety, $FS := 1.4$

Material: AL 7075-T73511 *(Ref. MIL-HDBK-5J, Table 3.7.6.0(g_2). Thickness: 0.250-0.499)*

The Expected temperature range is -56 to +181F (Ref. Appendix C2). Temperature de-rating is applied.

Compressive modulus, $Ec := 10700000 \cdot 0.97 \cdot psi$ $\quad Ec = 1.038 \times 10^7\ psi$

Ultimate tensile strength, $ftu := 68000 \cdot 0.92 \cdot psi$ $\quad ftu = 6.256 \times 10^4\ psi$

Tensile yield strength, $fty := 57000 \cdot 0.93 \cdot psi$ $\quad fty = 5.301 \times 10^4\ psi$

Compression yield strength, $fcy := 60000 \cdot 0.95 \cdot psi$ $\quad fcy = 5.7 \times 10^4\ psi$

Ultimate shear strength, $fsu := 38000 \cdot 0.98 \cdot psi$ $\quad fsu = 3.724 \times 10^4\ psi$

Section: 4.0" x 4.0" x 0.25" Tube *(Ref. SDG39135771)*

Shape Factor, $f := 1.22$ *(Ref. Structural Engineering Handbook, 4th Edition, Table 7, p.11-15)*

Unsupported length, $L := 19.035 \cdot in$

Width, $Dy := 4 \cdot in$

Depth, $Dz := 4 \cdot in$

Thickness, $t := 0.25 \cdot in$

Define: $b := 2 \cdot t$

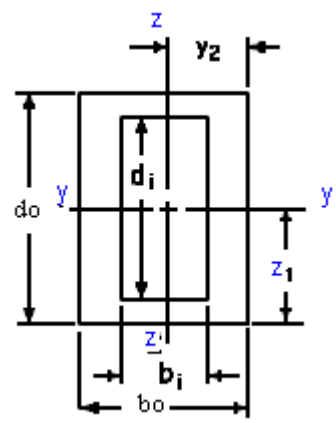

Properties of cross-section:

Outer base: $bo \equiv 4 \cdot in$

Inner base: $bi \equiv 3.5 \cdot in$

Outer height: $do \equiv 4 \cdot in$

Inner height: $di \equiv 3.5 \cdot in$

Area, $A := bo \cdot do - bi \cdot di$ $\quad A = 3.75\ in^2$

Moment of Inertia, $Iy := \dfrac{bo \cdot do^3 - bi \cdot di^3}{12}$ $\quad Iy = 8.828\ in^4$

$Iz := \dfrac{do \cdot bo^3 - di \cdot bi^3}{12}$ $\quad Iz = 8.828\ in^4$

First moments for shear stress calculation

$$Qz := do \cdot t \cdot \left(\frac{bo}{2} - \frac{t}{2}\right) + \left(\frac{bo}{2} - t\right)^2 \cdot t \qquad Qz = 2.641\ in^3$$

$$Qy := bo \cdot t \cdot \left(\frac{do}{2} - \frac{t}{2}\right) + \left(\frac{do}{2} - t\right)^2 \cdot t \qquad Qy = 2.641\ in^3$$

Section modulus,

$$Sy := \frac{Iy}{\frac{1}{2} \cdot Dz} \qquad Sy = 4.414\ in^3$$

$$Sz := \frac{Iz}{\frac{1}{2} \cdot Dy} \qquad Sz = 4.414\ in^3$$

Torsional constant / distance,

$$JoR := 2 \cdot t \cdot (Dz - t) \cdot (Dy - t)$$

(Ref. Roark's formulas for stress and strain, 6th Edition, table20, case 16)

$$JoR = 7.031\ in^3$$

Radii of gypration,

$$ry := \sqrt{\frac{Iy}{A}} \qquad ry = 1.534\ in$$

$$rz := \sqrt{\frac{Iz}{A}} \qquad rz = 1.534\ in$$

Fixity coefficient, (pin-ended)

$$K := 1.0$$

(Ref. Structural Engineering Handbook, 4th Edition, Figure 5, p.8-10)

Slenderness ratios,

$$SRy := \frac{K \cdot L}{ry} \qquad SRy = 12.406$$

$$SRz := \frac{K \cdot L}{rz} \qquad SRz = 12.406$$

Constants depending upon the mechanical properties of the material from *Ref. Structural Engineering Handbook, 4th Edition, Formulas 5a-c, p.11-6*:

$$Bc := fcy \cdot \left[1 + \left(\frac{fcy}{2250000 \cdot psi}\right)^{\frac{1}{2}}\right] \qquad Bc = 66072\ psi$$

$$Dc := \frac{Bc}{10} \cdot \left(\frac{Bc}{Ec}\right)^{\frac{1}{2}} \qquad Dc = 527\ psi$$

$$Cc := 0.41 \cdot \frac{2Bc}{3Dc} \qquad Cc = 34.258$$

Compression allowables:

$$Fcy := \begin{cases} Bc - Dc \cdot SRy & \text{if } SRy \le Cc \\ Ec \cdot \left(\frac{\pi}{SRy}\right)^2 & \text{otherwise} \end{cases} \qquad Fcy = 59532\,psi$$

$$Fcz := \begin{cases} Bc - Dc \cdot SRz & \text{if } SRz \le Cc \\ Ec \cdot \left(\frac{\pi}{SRz}\right)^2 & \text{otherwise} \end{cases} \qquad Fcz = 59532\,psi$$

Ref. Structural Engineering Handbook, 4th Edition, p.11-25, defines:

$$Fey := \frac{102000000 \cdot psi}{FS \cdot SRy^2} \qquad Fey = 473373\,psi$$

$$Fez := \frac{102000000 \cdot psi}{FS \cdot SRz^2} \qquad Fez = 473373\,psi$$

Ultimate shear allowables:

(Ref. Roark's formulas for stress and strain, pp.95)

$$Vulty := fsu \cdot \frac{Iz \cdot b}{Qz} \qquad Vulty = 62250\,lbf$$

$$Vultz := fsu \cdot \frac{Iy \cdot b}{Qy} \qquad Vultz = 62250\,lbf$$

Ultimate torsion allowable:

(Ref. Roark's formulas for stress and strain, 6th Edition, table20, case 16)

$$Tult := fsu \cdot JoR \qquad Tult = 261844\,in \cdot lbf$$

Axial tensile allowable:

$$Pt := ftu \cdot A \qquad Pt = 234600\,lbf$$

Axial compression allowable:

$$Pcr := \begin{cases} Fcz \cdot A & \text{if } Fcy \ge Fcz \\ Fcy \cdot A & \text{otherwise} \end{cases} \qquad Pcr = 223246\,lbf$$

Ultimate bending allowables:

$$Multy := Sy \cdot [ftu + (f - 1) \cdot fty] \qquad Multy = 327621\,in \cdot lbf$$

$$Multz := Sz \cdot [ftu + (f - 1) \cdot fty] \qquad Multz = 327621\,in \cdot lbf$$

Combined bending and axial allowables:

$$Pey := Fey \cdot A \qquad Pey = 1775149\,lbf$$

$$Pez := Fez \cdot A \qquad Pez = 1775149\,lbf$$

NASPOST was used to list all element loads of Keel Tube in the file named "bucklgnl.lis". The file is located at /hsm/bsommer/ams/naspost/uss/2-03/ (Ref. Appendix A2 for NASPOST sort).

File "keel.txt" used in Mathcad was generated from "lbucklgnl.lis" by removing all texts and comments.

$load := READPRN("keel.txt")$ $\qquad i := 1 .. rows(load)$

Element ID: $ID := load^{\langle 1 \rangle}$ $\qquad$ Load case number: $LC := load^{\langle 2 \rangle}$

+ At end A of beam element:

Moment: $M1a := load^{\langle 3 \rangle} \cdot in \cdot lbf$ $\qquad M2a := load^{\langle 4 \rangle} \cdot in \cdot lbf$

Shear force: $V1a := load^{\langle 5 \rangle} \cdot lbf$ $\qquad V2a := load^{\langle 6 \rangle} \cdot lbf$

Axial force: $Pa := load^{\langle 7 \rangle} \cdot lbf$

Total torque: $Toa := load^{\langle 8 \rangle} \cdot in \cdot lbf$

Warp torque: $Warpa := load^{\langle 9 \rangle} \cdot in \cdot lbf$

+ At end B of beam element:

Moment: $M1b := load^{\langle 10 \rangle} \cdot in \cdot lbf$ $\qquad M2b := load^{\langle 11 \rangle} \cdot in \cdot lbf$

Shear force: $V1b := load^{\langle 12 \rangle} \cdot lbf$ $\qquad V2b := load^{\langle 13 \rangle} \cdot lbf$

Axial force: $Pb := load^{\langle 14 \rangle} \cdot lbf$

Total torque: $Tob := load^{\langle 15 \rangle} \cdot in \cdot lbf$

Warp torque: $Warpb := load^{\langle 16 \rangle} \cdot in \cdot lbf$

Modify end torque by subtracting warping torque:

$$Ta_i := \left|Toa_i\right| - \left|Warpa_i\right|$$

$$Tb_i := \left|Tob_i\right| - \left|Warpb_i\right|$$

Shear ratios:

$$RSa_i := \frac{\left|V1a_i\right|}{Vulty} + \frac{\left|V2a_i\right|}{Vultz} + \frac{Ta_i}{Tult}$$

$$RSb_i := \frac{\left|V1b_i\right|}{Vulty} + \frac{\left|V2b_i\right|}{Vultz} + \frac{Tb_i}{Tult}$$

Tensile ratio at end A:

$$RTa_i := \begin{cases} \dfrac{\left|Pa_i\right|}{Pt} + \dfrac{\left|M2a_i\right|}{Multy} + \dfrac{\left|M1a_i\right|}{Multz} & \text{if } Pa_i \ge 0\cdot lbf \\ \dfrac{\left|Pa_i\right|}{Pcr} + \dfrac{\left|M2a_i\right|}{Multy}\cdot\dfrac{1}{1-\dfrac{\left|Pa_i\right|}{Pey}} + \dfrac{\left|M1a_i\right|}{Multz}\cdot\dfrac{1}{1-\dfrac{\left|Pa_i\right|}{Pez}} & \text{otherwise} \end{cases}$$

Tensile ratio at end B:

$$RTb_i := \begin{cases} \dfrac{\left|Pb_i\right|}{Pt} + \dfrac{\left|M2b_i\right|}{Multy} + \dfrac{\left|M1b_i\right|}{Multz} & \text{if } Pb_i \ge 0\cdot lbf \\ \dfrac{\left|Pb_i\right|}{Pcr} + \dfrac{\left|M2b_i\right|}{Multy}\cdot\dfrac{1}{1-\dfrac{\left|Pb_i\right|}{Pey}} + \dfrac{\left|M1b_i\right|}{Multz}\cdot\dfrac{1}{1-\dfrac{\left|Pb_i\right|}{Pez}} & \text{otherwise} \end{cases}$$

Combined Ratios:

$$RATIOa_i := \sqrt{\left(RTa_i\right)^2 + \left(RSa_i\right)^2}$$

$$RATIOb_i := \sqrt{\left(RTb_i\right)^2 + \left(RSb_i\right)^2}$$

$$RATIO_i := \text{if}\left(RATIOa_i \ge RATIOb_i, RATIOa_i, RATIOb_i\right)$$

Margin of Safety:

$$MS_i := \frac{1}{RATIO_i\cdot FS} - 1$$

min(MS) = 1.93

Reference

The worst load case that yielded minimum margin of safety is shown below:

$output := augment(ID, LC, MS)$ $\qquad$ $sorted := csort(output, 3)$

$$\left(sorted^T\right)^{\langle 1 \rangle^T} = (1303 \quad 2037 \quad 1.93)$$

Based upon the output of SORT function above, it reads:

Element ID = 1303

Load ID = 2037

MS = 1.93

2.3.4 Keel Trunnion

Prepared By	Name	Date	Engineering and Science Contract Group	File Name
	Brent Dyer	01/25/06		uss_keel_trunnion.mcd
Checked By	John Krejci		*Structural Analysis Section*	Drawing No. SDG39135772
Title	USS-02 Keel Trunnion			

USS 02 Keel Trunnion Analysis

The objective of this analysis is to demonstrate the structural strength of the **Keel Trunnion (SDG 39135772).** The difference in minimum temperature (for launch, abort landing, and nominal landing) can change the friction coefficient and therefore affects the axial load in the trunnion. The Keel Trunnion analysis is performed three times, once for each of the following cases; launch, nominal landing, and abort landing.

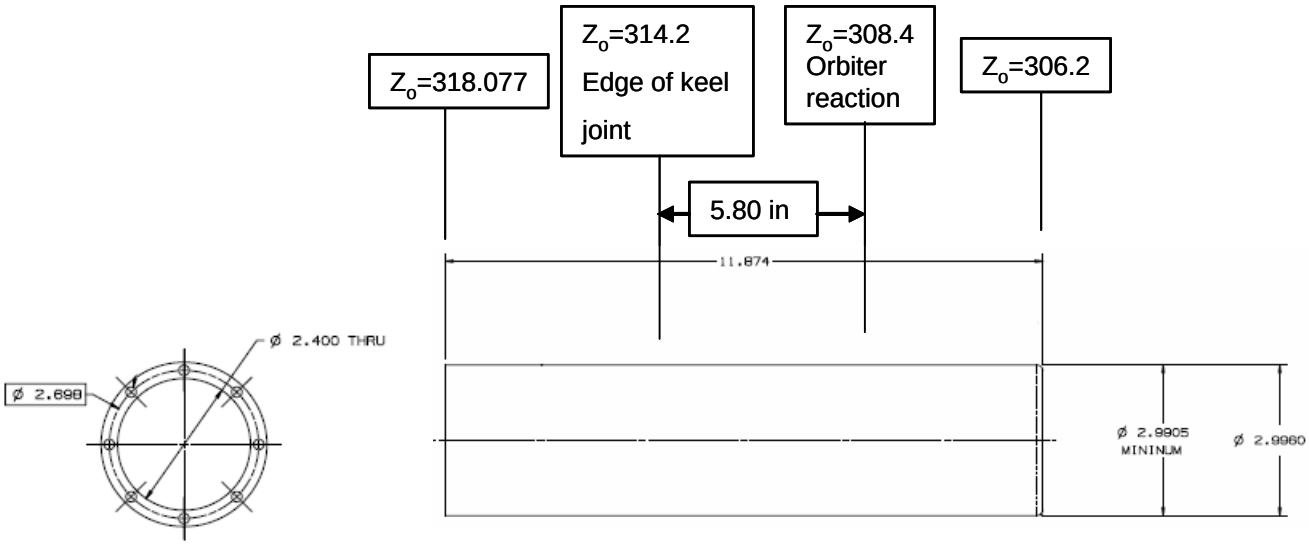

Material Properties:

Material Custom 455, H1000 bar AMS5617 (Ref. MIL-HDBK-5J, table 2.6.4.0 (b))

$Ftu := 200 \cdot 10^3 \cdot psi$ $\quad Fty := 185 \cdot 10^3 \cdot psi$

$Fsu := 124 \cdot 10^3 \cdot psi$

$Fbru := 409 \cdot 10^3 \cdot psi$ $\quad Fbry := 343 \cdot 10^3 \cdot psi$

$Et := 28.9 \cdot 10^6 \cdot psi$ $\quad \omega := 0.28 \cdot \frac{lbf}{in^3}$

Temp. correction factor, ult & yield:
(Ref. MIL-HDBK-5J, fig.2.6.4.2.1 and Appendix C2)

Launch Temperatures (40 to 120 F): $c1tu := 0.98$ $\quad c1ty := .98$

Abort Landing Temp. (40 to 150 F): $c2tu := 0.97$ $\quad c2ty := .97$

Nominal Landing Temp. (-78 to 101 F): $c3tu := 0.99$ $\quad c3ty := .99$

Geometry:

Section at edge of keel joint (Z= 314.20)

Max. outer dia. of trunnion $\quad dtmax := 2.993 \cdot in$ (Ref. drawing SDG39135772)

Min.outer diameter of trunnion $\quad dto := 2.9905 \cdot in$

Inner diameter of trunnion $\quad dt89 := 2.400 \cdot in + 0.005 \cdot in$ $\quad dt89 = 2.405\ in$

Area of cross-section $\quad As := \frac{\pi \cdot \left(dto^2 - dt89^2\right)}{4}$ $\quad As = 2.481\ in^2$

Moment of inertia $Is := \frac{\pi \cdot \left(dto^4 - dt89^4\right)}{64}$ $Is = 2.284\,in^4$

Factor of safety, ultimate $FSu := 1.40$ Factor of safety, yield $FSy := 1.10$

Loads:

The following NASPOST results were sorted for maximum forces in the y-direction for all trunnions. The keel trunnion has element ID 5 in the loads model (Ref. Appendix A2 for NASPOST sort):

+++ MAX Y LAUNCH TRUNNION FORCES +++

ID	SUBCASE	FX	FY	FZ
5	1060	0.000000E+00	2.411519E+04	0.000000E+00

+++ MAX Y ABORT LANDING TRUNNION FORCES +++

ID	SUBCASE	FX	FY	FZ
5	2017	0.000000E+00	9.118636E+03	0.000000E+00

+++ MAX Y NOMLANDING TRUNNION FORCES +++

ID	SUBCASE	FX	FY	FZ
5	4051	0.000000E+00	1.559590E+04	0.000000E+00

Launch Case:

Max.load in y direction $Pr := 24115.19 \cdot lbf$ (Ref.AMS-02, loads model 2-04, Load case 1060, element ID 5, data file: maxtrunnionforces1000.lis)

The tolerances between the Tube and the Block are tight. Due to this tight tolerance, any side load transferred through the Tube to the Retainer would result in small deflections of the Retainer. This would result in the side load being reacted between the Tube and the Block due to these tight tolerances.

Moment arm from load to edge of keel joint $d2 := 5.8 \cdot in + 0.5 \cdot in$

(Ref. CAD model for 5.8" dimension) $d2 = 6.3\,in$

(Ref. Appendix C6 for the 0.5" dynamic excursion)

Max.bending moment at edge of keel joint $Mb := Pr \cdot d2$

$Mb = 151925.7\,in \cdot lbf$

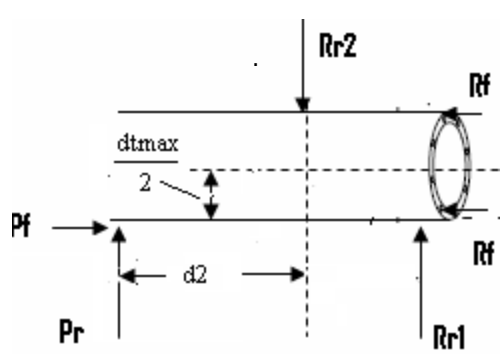

Friction coefficient is assessed based on Figure 4.1.1.1-1 of NSTS-21000-IDD-ISS, Ref. Appendix C7.

$P := Pr$ $P = 24115\,lbf$

$T := 40 \cdot deg$ (It is conservative to use the minimum temperature (Ref. Appendix C2))

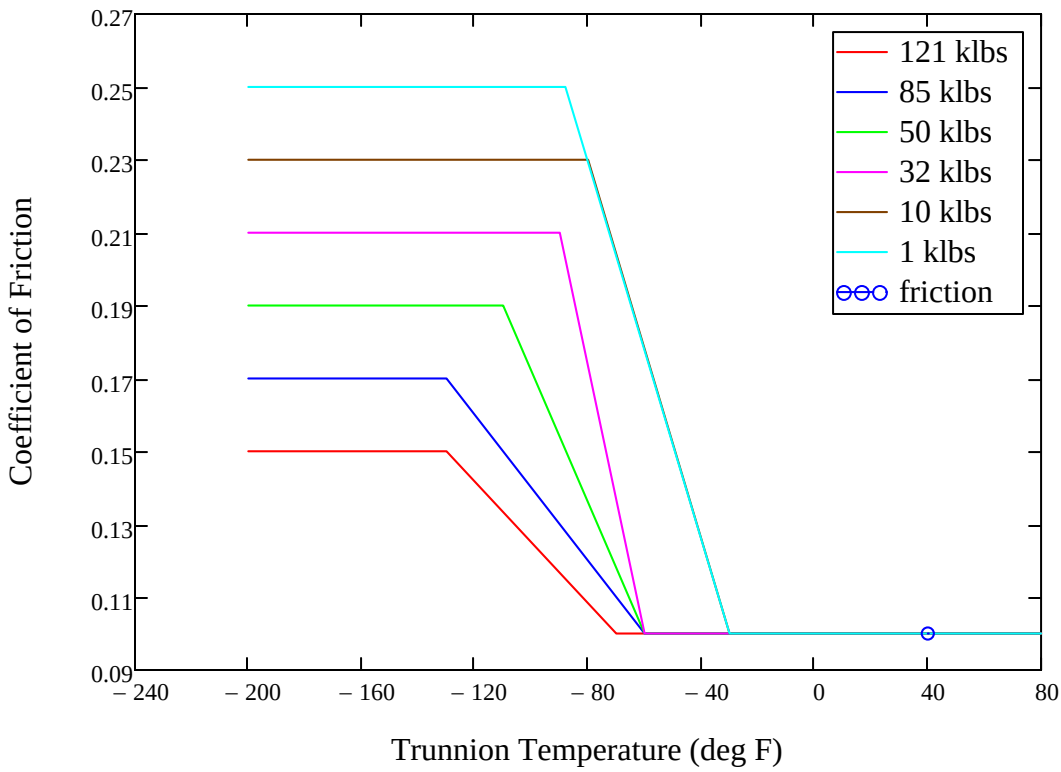

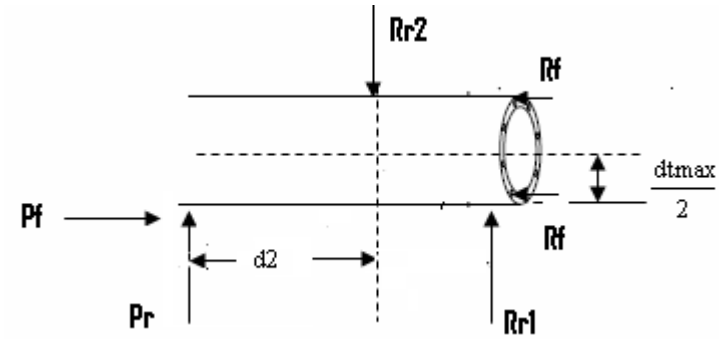

Friction coefficient $\mu = 0.100$

Friction load 10% of load $Pf := Pr \cdot \mu$ $\quad Pf = 2411.5\,lbf$

Friction moment $Mf := Pf \cdot \frac{dtmax}{2}$ $\quad Mf = 3608.8\,in \cdot lbf$

Total moment $M := Mb + Mf$ $\quad M = 155534.5\,in \cdot lbf$

Applied limit stress in shaft $\sigma l := \left(Mb \cdot \frac{dtmax}{2 \cdot Is}\right)$ $\quad \sigma l = 99554.7\,psi$

Plastic bending allowable (Ref.NASA TM X-73305,sect B.4.5)

Section factor

Outer radius $ro := \frac{dto}{2}$ $ro = 1.495\ in$

Inner radius $ri := \frac{dt89}{2}$ $ri = 1.202\ in$

Area of semicircular segment $Ase := \frac{\pi}{2} \cdot \left(ro^2 - ri^2\right)$ $Ase = 1.241\ in^2$

Distance of neutral axis from center line $ybar := \frac{4}{3 \cdot \pi} \cdot \left(\frac{ro^3 - ri^3}{ro^2 - ri^2}\right)$ $ybar = 0.862\ in$

First moment of area $Q := Ase \cdot ybar$ $Q = 1.069\ in^3$

Distance of extreme fiber from centerline of shaft $c := \frac{dtmax}{2}$ $c = 1.496\ in$

Section factor $K := \frac{2 \cdot Q \cdot c}{Is}$ $K = 1.4016$

Allowable bending modulus of rupture ult. $\sigma p := 272000 \cdot psi$ (Ref.NASA TM X-73305,sect B.4.5 fig. B4.5.5.2-7)

Allowable bending modulus of rupture yld. $\sigma y := 200000 \cdot psi$

Check

Section factor $K := 1.698 \cdot \frac{ro \cdot \left(ro^3 - ri^3\right)}{ro^4 - ri^4}$ $K = 1.4007$ (Ref. Formulas for Stress, Strain, and Structural Matrices, Table 2-2, Case 6)

$fmu := 200000 \cdot psi$ $fou := 192000 \cdot psi$ (Ref. Bruhn, table C3.2 page C3.11)

$fmy := 176000 \cdot psi$ $foy := 65000 \cdot psi$

$Fbu := fmu + fou \cdot (K - 1)$ $Fbu = 276942.5\ psi$ (Ref. Bruhn page C3.3, equation 3)

$Fby := fmy + foy \cdot (K - 1)$ $Fby = 202048.2\ psi$ (These numbers match the σp and σy closely)

Axial tension stress $\sigma a := \frac{Pf}{As}$ $\sigma a = 971.946\ psi$

Shear stress $\tau := \frac{Pr}{As}$ $\tau = 9719.462\ psi$

Stress ratios, Ultimate

Stress ratio in tension, ultimate $Rau := \frac{\sigma a \cdot FSu}{Ftu \cdot c1tu}$ $Rau = 0.007$

Stress ratio in bending, ultimate $Rbu := \frac{\sigma l \cdot FSu}{Fbu \cdot c1tu}$ $Rbu = 0.514$

Stress ratio in shear, ultimate $Rsu := \frac{\tau \cdot FSu}{Fsu \cdot c1tu}$ $Rsu = 0.112$

Margin of safety ultimate $MSu := \frac{1}{\sqrt{(Rau + Rbu)^2 + Rsu^2}} - 1$ $MSu = 0.88$

Stress ratios, Yield

Stress ratio in tension, yield $Ray := \frac{\sigma a \cdot FSy}{Fty \cdot c1ty}$ $Ray = 0.006$

Stress ratio in bending, yield $Rby := \frac{\sigma l \cdot FSy}{Fby \cdot c1ty}$ $Rby = 0.553$

Stress ratio in shear, yield $Rsy := \frac{\tau \cdot FSy}{0.5Fty \cdot c1ty}$ $Rsy = 0.118$

Margin of safety, yield $MSy := \frac{1}{\sqrt{(Ray + Rby)^2 + Rsy^2}} - 1$ $MSy = 0.75$

.

Beam and Socket analysis - Launch Case

Treating the connection as a Beam in a Socket, as per SMM, Memo 41a

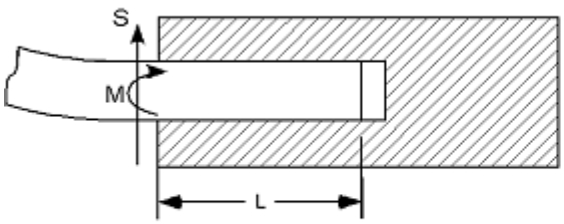

S and M are respectively beam shear in lbf and moment in in-lbf at end of socket. W is unit loading in lbf/in.

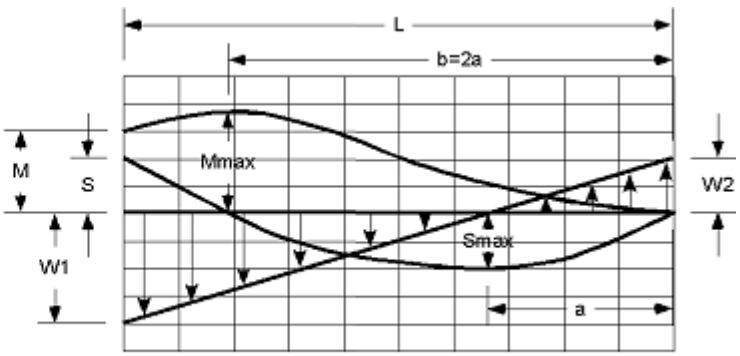

Resultant shear Load $S := Pr$ $S = 24115\,lbf$

Moment at edge of sill joint $M := Mb + Mf$ $M = 155535\,in \cdot lbf$

Length of overlap $L := 3.874 \cdot in$

$$slm_ratio := if\left(M = 0, 1000, S \cdot \frac{L}{M}\right) \qquad slm_ratio = 0.601$$

$$mls_ratio := if\left(S = 0, 1000, \frac{M}{S \cdot L}\right) \qquad mls_ratio = 1.665$$

Prepared By	Name	Date	Engineering and Science Contract Group	File Name
	Brent Dyer	01/25/06		uss_keel_trunnion.mcd
Checked By	John Krejci		*Structural Analysis Section*	Drawing No. SDG39135772
Title	USS-02 Keel Trunnion			

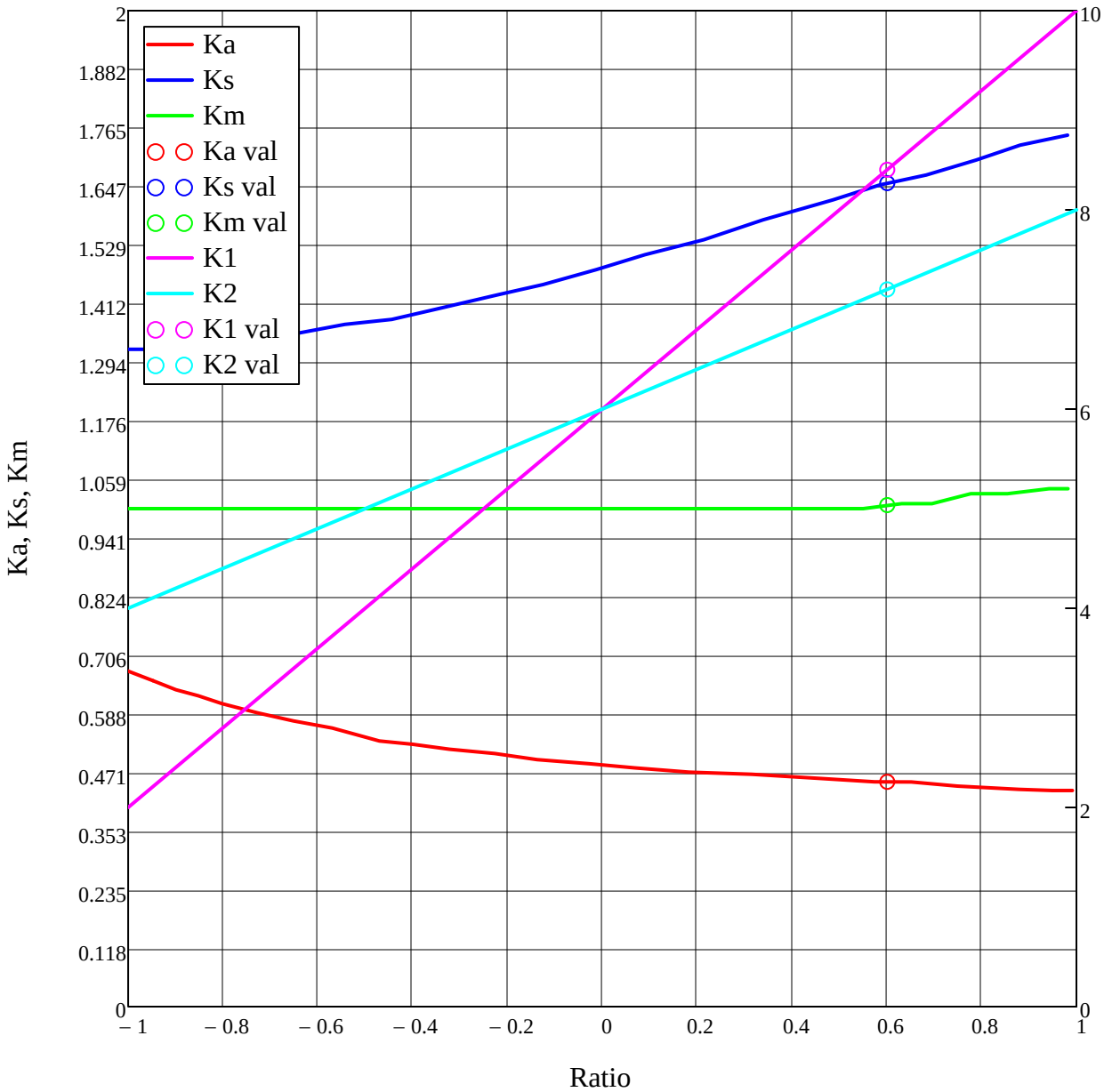

Beam and Socket Coefficients
Note if abs(SL/M) <= 1, Ratio = SL/M, otherwise Ratio = M/SL.

Coefficients are:

Ka = 0.452 Ks = 1.654 Km = 1.007

K1 = 8.403 K2 = 7.201

Calculated values are then:

$$w1 := \begin{cases} \dfrac{K1 \cdot M}{L^2} & \text{if } |slm_ratio| \le 1 \\ \dfrac{K1 \cdot S}{L} & \text{otherwise} \end{cases} \qquad w1 = 87080.7 \frac{lbf}{in}$$

$$w2 := \begin{cases} \dfrac{K2 \cdot M}{L^2} & \text{if } |slm_ratio| \le 1 \\ \dfrac{K2 \cdot S}{L} & \text{otherwise} \end{cases} \qquad w2 = 74630.9 \frac{lbf}{in}$$

$$a := Ka \cdot L \qquad a = 1.749\ in$$

Max. shear

$$Smax := \begin{cases} \dfrac{-Ks \cdot M}{L} & \text{if } |slm_ratio| \le 1 \\ -Ks \cdot S & \text{otherwise} \end{cases} \qquad Smax = -66392\ lbf$$

Max. Bending moment

$$Mmax := \begin{cases} Km \cdot M & \text{if } |slm_ratio| \le 1 \\ Km \cdot S \cdot L & \text{otherwise} \end{cases} \qquad Mmax = 156658.1\ in \cdot lbf$$

Now check:

$$Sc := \frac{w1 - w2}{2} \cdot L \qquad Sc = 2.4 \times 10^4\ lbf$$

$$Mc := \frac{-w1 + 2 \cdot w2}{6} \cdot L^2 \qquad Mc = 155534.5\ in \cdot lbf$$

Percent error:

$$S_percentdiff := \frac{S - Sc}{S} \qquad S_percentdiff = -0\ \%$$

$$M_percentdiff := \frac{M - Mc}{M} \qquad M_percentdiff = 0\ \%$$

Prepared By	Name	Date		File Name
	Brent Dyer	01/25/06		uss_keel_trunnion.mcd
Checked By	John Krejci		**Engineering and Science Contract Group** *Structural Analysis Section*	Drawing No. SDG39135772
Title	USS-02 Keel Trunnion			

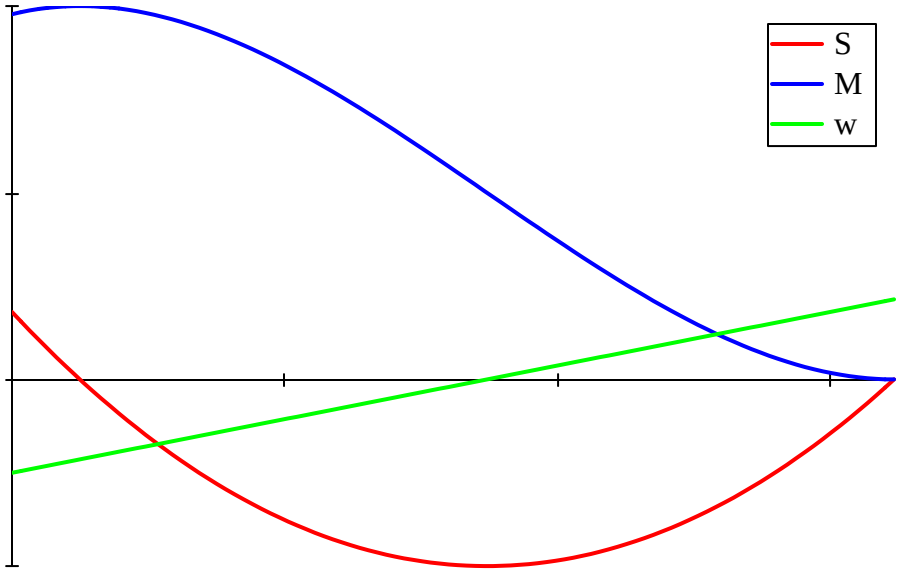

Actual Shear and Moment Distribution Inside Socket

In the following calculation, conservatively, the maximum values of the bending moment and shear are used.

Max. Shear $Smax = -66392\ lbf$

Max. Bending moment $Mmax = 156658.1\ in \cdot lbf$ (see page 2.3.4-9)

Section properties (see page 2.3.4-2 and 3)

Area of cross-section $As = 2.481\ in^2$

Moment of inertia $Is = 2.284\ in^4$

Section modulus $S1 := \dfrac{Is}{\dfrac{dtmax}{2}}$ $S1 = 1.526\ in^3$

Stresses

Total moment $Msocket := Mmax$ $Msocket = 156658.1\ in \cdot lbf$

Bending Tensile stress $\sigma := \dfrac{Msocket}{S1}$ $\sigma = 102655.8\ psi$

Shear stress $\tau soc := \dfrac{|Smax|}{As}$ $\tau soc = 26758.9\ psi$

Axial tension stress $\sigma a := \dfrac{Pf}{As}$ $\sigma a = 971.946\ psi$

Stress Ratios

Axial (ult) $Ra := \dfrac{\sigma a \cdot FSu}{Ftu \cdot c1tu}$ $Ra = 0.007$

Bending (ult) $Rb := \dfrac{FSu \cdot \sigma}{Fbu \cdot c1tu}$ $Rb = 0.53$

Shear (ult) $Rs := \dfrac{FSu \cdot \tau soc}{Fsu \cdot c1tu}$ $Rs = 0.308$

Axial (yld) $Ray := \dfrac{\sigma a \cdot FSy}{Fty \cdot c1ty}$ $Ray = 0.006$

Bending (yld) $Rby := \dfrac{FSy \cdot \sigma}{Fby \cdot c1ty}$ $Rby = 0.57$

Shear(yld) $Rsy := \dfrac{FSy \cdot \tau soc}{0.50 Fty \cdot c1ty}$ $Rsy = 0.325$

Margins of safety

Margin of safety ultimate $MSu := \frac{1}{\sqrt{(Ra + Rb)^2 + Rs^2}} - 1$ $MSu = 0.62$

Margin of safety yield $MSy := \frac{1}{\sqrt{(Ray + Rby)^2 + Rsy^2}} - 1$ $MSy = 0.51$

<u>Nominal Landing Case</u>:

Max.load in y direction $Pr := 15595.9 \cdot lbf$ (Ref.AMS-02, loads model 2-04, Load case 4051, element ID 5, data file: maxtrunnionforces4000.lis)

The tolerances between the Tube and the Block are tight. Due to this tight tolerance, any side load transferred through the Tube to the Retainer would result in small deflections of the Retainer. This would result in the side load being reacted between the Tube and the Block due to these tight tolerances.

Moment arm from load to edge of keel joint $d2 := 5.8 \cdot in + 0.5 \cdot in$

(Ref. CAD model for 5.8" dimension) $d2 = 6.3\,in$

(Ref. Appendix C6 for the 0.5" dynamic excursion)

Max.bending moment at edge of keel joint $Mb := Pr \cdot d2$

$Mb = 98254.2\ in \cdot lbf$

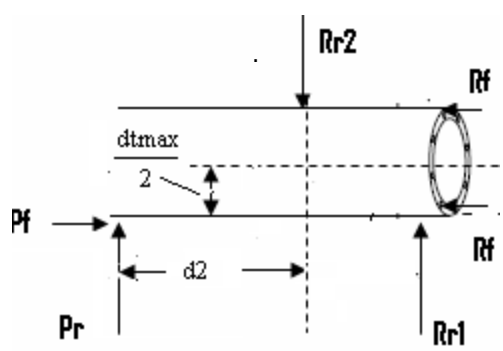

Friction coefficient is assessed based on Figure 4.1.1.1-1 of NSTS-21000-IDD-ISS, Ref. Appendix C7.

$P := Pr$ $P = 15596\,lbf$

$T := -56 \cdot deg$ (It is conservative to use the minimum temperature (Ref. Appendix C2))

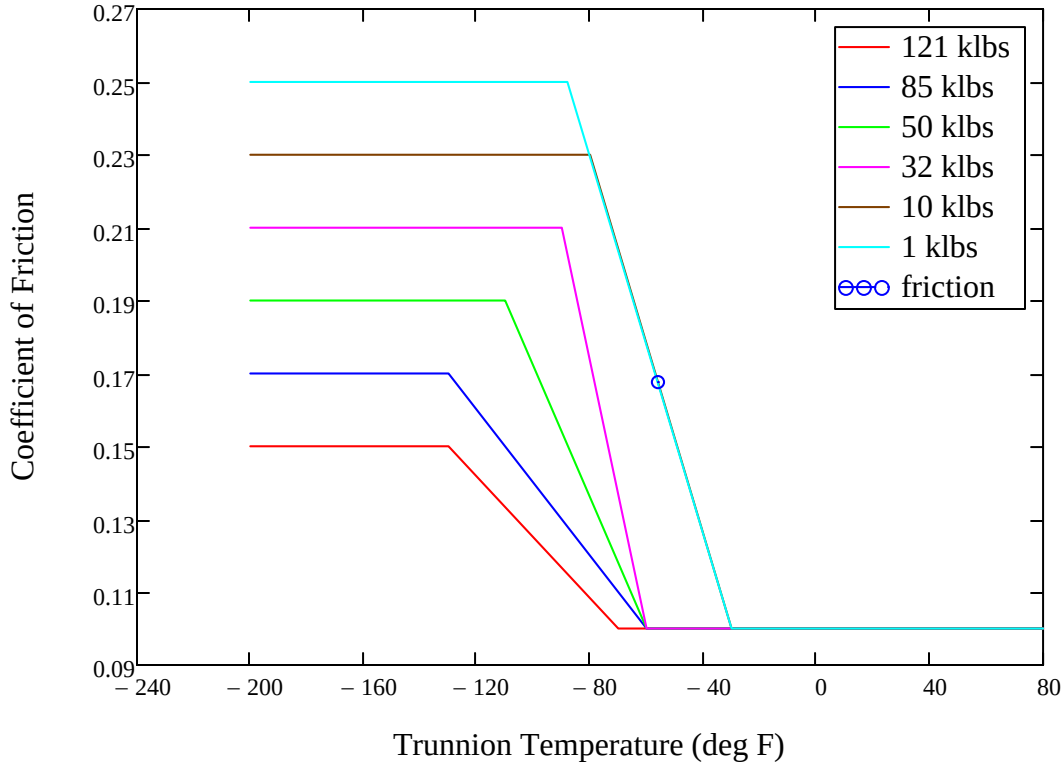

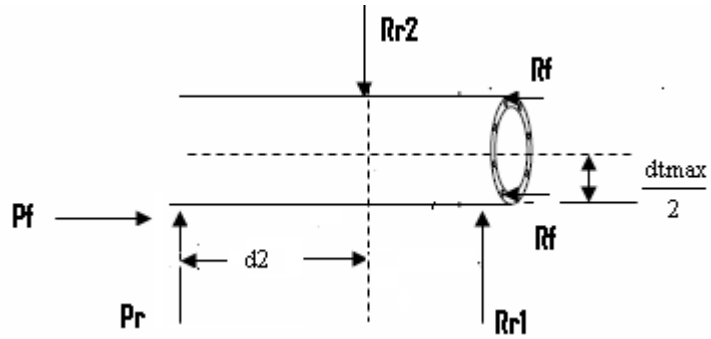

Friction coefficient $\mu = 0.168$

Friction load 17% of load $Pf := Pr \cdot \mu$ $\quad Pf = 2613.9\,lbf$

Friction moment $Mf := Pf \cdot \frac{dtmax}{2}$ $\quad Mf = 3911.7\,in \cdot lbf$

Total moment $M := Mb + Mf$ $\quad M = 102165.8\,in \cdot lbf$

Applied limit stress in shaft $\sigma l := \left(Mb \cdot \frac{dtmax}{2 \cdot Is}\right)$ $\quad \sigma l = 64384.5\,psi$

Plastic bending allowable (Ref.NASA TM X-73305,sect B.4.5)

Section factor

Outer radius $ro := \frac{dto}{2}$ $ro = 1.495\ in$

Inner radius $ri := \frac{dt89}{2}$ $ri = 1.202\ in$

Area of semicircular segment $Ase := \frac{\pi}{2} \cdot \left(ro^2 - ri^2\right)$ $Ase = 1.241\ in^2$

Distance of neutral axis from center line $ybar := \frac{4}{3 \cdot \pi} \cdot \left(\frac{ro^3 - ri^3}{ro^2 - ri^2}\right)$ $ybar = 0.862\ in$

First moment of area $Q := Ase \cdot ybar$ $Q = 1.069\ in^3$

Distance of extreme fiber from centerline of shaft $c := \frac{dtmax}{2}$ $c = 1.496\ in$

Section factor $K := \frac{2 \cdot Q \cdot c}{Is}$ $K = 1.4016$

Allowable bending modulus of rupture ult. $\sigma p := 272000 \cdot psi$ (Ref.NASA TM X-73305,sect B.4.5 fig. B4.5.5.2-7)

Allowable bending modulus of rupture yld. $\sigma y := 200000 \cdot psi$

Check

Section factor $K := 1.698 \cdot \frac{ro \cdot \left(ro^3 - ri^3\right)}{ro^4 - ri^4}$ $K = 1.4007$ (Ref. Formulas for Stress, Strain, and Structural Matrices, Table 2-2, Case 6)

$fmu := 200000 \cdot psi$ $fou := 192000 \cdot psi$ (Ref. Bruhn, table C3.2 page C3.11)

$fmy := 176000 \cdot psi$ $foy := 65000 \cdot psi$

$Fbu := fmu + fou \cdot (K - 1)$ $Fbu = 276942.5\ psi$ (Ref. Bruhn page C3.3, equation 3)

$Fby := fmy + foy \cdot (K - 1)$ $Fby = 202048.2\ psi$ (These numbers match the σp and σy closely)

Axial tension stress $\sigma a := \frac{Pf}{As}$ $\sigma a = 1053.503\ psi$

Shear stress $\tau := \frac{Pr}{As}$ $\tau = 6285.82\ psi$

Stress ratios, Ultimate

Stress ratio in tension, ultimate $Rau := \frac{\sigma a \cdot FSu}{Ftu \cdot c3tu}$ $Rau = 0.007$

Stress ratio in bending, ultimate $Rbu := \frac{\sigma l \cdot FSu}{Fbu \cdot c3tu}$ $Rbu = 0.329$

Stress ratio in shear, ultimate $Rsu := \frac{\tau \cdot FSu}{Fsu \cdot c3tu}$ $Rsu = 0.072$

Margin of safety ultimate $MSu := \frac{1}{\sqrt{(Rau + Rbu)^2 + Rsu^2}} - 1$ $MSu = 1.91$

Stress ratios, Yield

Stress ratio in tension, yield $Ray := \frac{\sigma a \cdot FSy}{Fty \cdot c3ty}$ $Ray = 0.006$

Stress ratio in bending, yield $Rby := \frac{\sigma l \cdot FSy}{Fby \cdot c3ty}$ $Rby = 0.354$

Stress ratio in shear, yield $Rsy := \frac{\tau \cdot FSy}{0.5Fty \cdot c3ty}$ $Rsy = 0.076$

Margin of safety, yield $MSy := \frac{1}{\sqrt{(Ray + Rby)^2 + Rsy^2}} - 1$ $MSy = 1.72$

.

Beam and Socket analysis - Nominal Landing Case

Treating the connection as a Beam in a Socket, as per SMM, Memo 41a

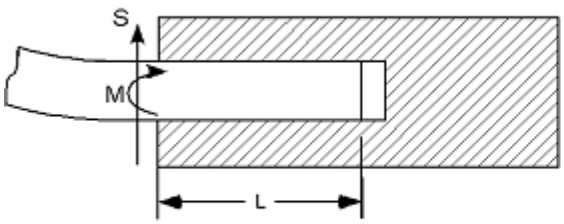

S and M are respectively beam shear in lbf and moment in in-lbf at end of socket. W is unit loading in lbf/in.

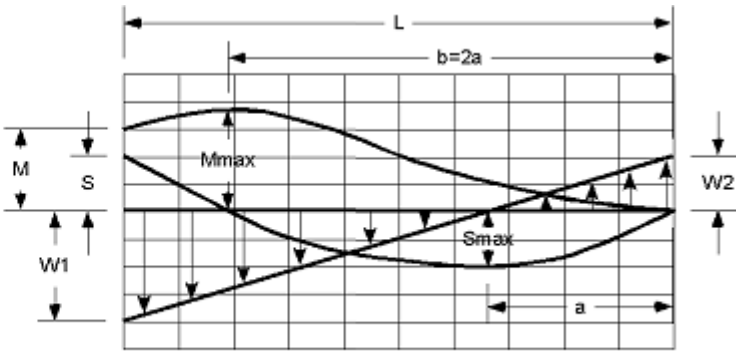

Resultant shear Load $S := Pr$ $S = 15596\,lbf$

Moment at edge of sill joint $M := Mb + Mf$ $M = 102166\,in \cdot lbf$

Length of overlap $L := 3.874 \cdot in$

$$slm_ratio := if\left(M = 0, 1000, S \cdot \frac{L}{M}\right) \qquad slm_ratio = 0.591$$

$$mls_ratio := if\left(S = 0, 1000, \frac{M}{S \cdot L}\right) \qquad mls_ratio = 1.691$$

Prepared By	Name	Date	Engineering and Science Contract Group	File Name
	Brent Dyer	01/25/06		uss_keel_trunnion.mcd
Checked By	John Krejci		*Structural Analysis Section*	Drawing No. SDG39135772
Title	USS-02 Keel Trunnion			

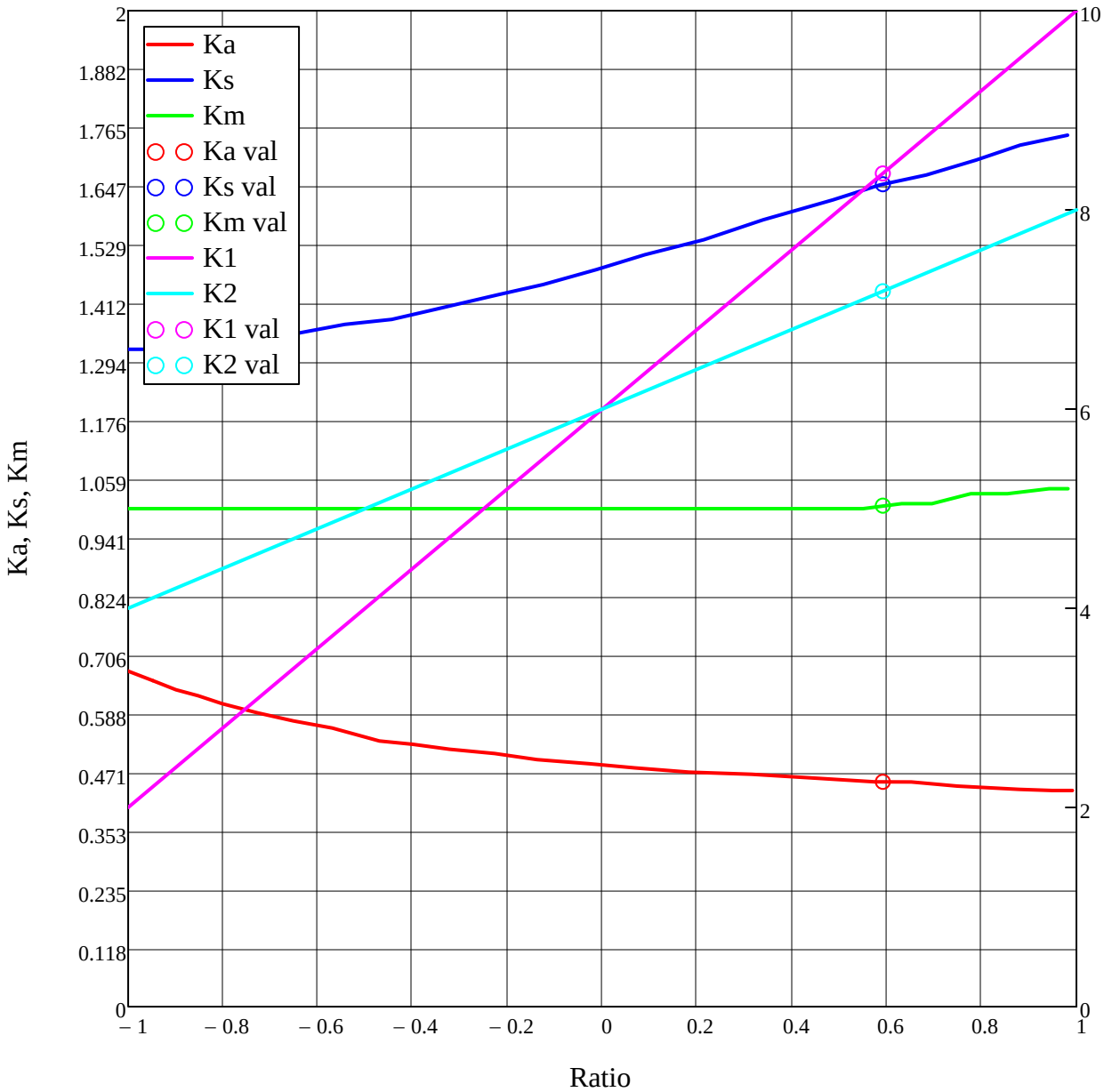

Beam and Socket Coefficients
Note if abs(SL/M) <= 1, Ratio = SL/M, otherwise Ratio = M/SL.

Coefficients are:

Ka = 0.451 Ks = 1.652 Km = 1.006

K1 = 8.366 K2 = 7.183

Calculated values are then:

$$w1 := \begin{cases} \dfrac{K1 \cdot M}{L^2} & \text{if } |slm_ratio| \le 1 \\ \dfrac{K1 \cdot S}{L} & \text{otherwise} \end{cases} \qquad w1 = 56948 \frac{lbf}{in}$$

$$w2 := \begin{cases} \dfrac{K2 \cdot M}{L^2} & \text{if } |slm_ratio| \le 1 \\ \dfrac{K2 \cdot S}{L} & \text{otherwise} \end{cases} \qquad w2 = 48896.5 \frac{lbf}{in}$$

$$a := Ka \cdot L \qquad a = 1.749\ in$$

Max. shear

$$Smax := \begin{cases} \dfrac{-Ks \cdot M}{L} & \text{if } |slm_ratio| \le 1 \\ -Ks \cdot S & \text{otherwise} \end{cases} \qquad Smax = -43555\ lbf$$

Max. Bending moment

$$Mmax := \begin{cases} Km \cdot M & \text{if } |slm_ratio| \le 1 \\ Km \cdot S \cdot L & \text{otherwise} \end{cases} \qquad Mmax = 102764.2\ in \cdot lbf$$

Now check:

$$Sc := \frac{w1 - w2}{2} \cdot L \qquad Sc = 1.6 \times 10^4\ lbf$$

$$Mc := \frac{-w1 + 2 \cdot w2}{6} \cdot L^2 \qquad Mc = 102165.8\ in \cdot lbf$$

Percent error:

$$S_percentdiff := \frac{S - Sc}{S} \qquad S_percentdiff = 0\ \%$$

$$M_percentdiff := \frac{M - Mc}{M} \qquad M_percentdiff = 0\ \%$$

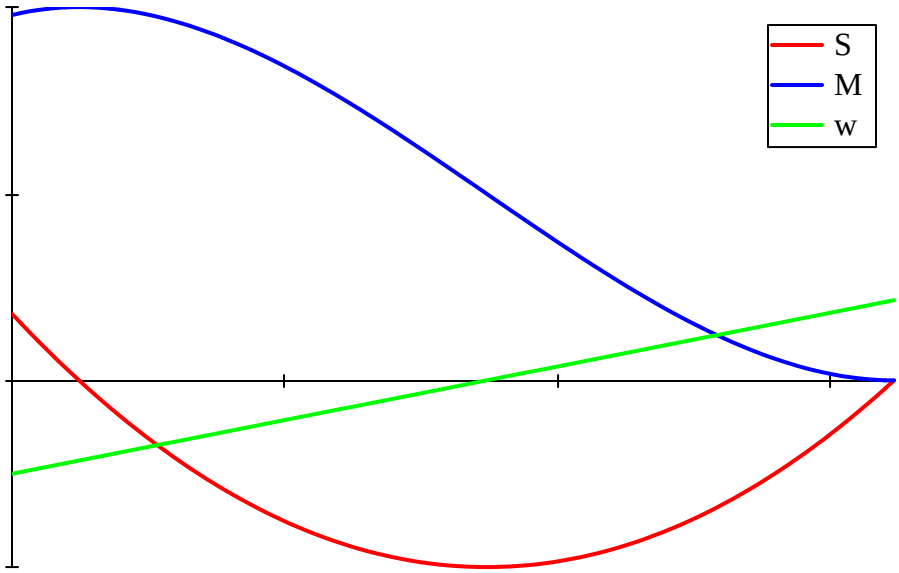

Actual Shear and Moment Distribution Inside Socket

In the following calculation, conservatively, the maximum values of the bending moment and shear are used.

Max. Shear $Smax = -43555\,lbf$

Max. Bending moment $Mmax = 102764.2\,in \cdot lbf$ (see page 2.3.4-9)

Section properties (see page 2.3.4-2 and 3)

Area of cross-section $As = 2.481\,in^2$

Moment of inertia $Is = 2.284\,in^4$

Section modulus $S1 := \dfrac{Is}{\dfrac{dtmax}{2}}$ $S1 = 1.526\,in^3$

Stresses

Total moment $Msocket := Mmax$ $Msocket = 102764.2\,in \cdot lbf$

Bending Tensile stress $\sigma := \dfrac{Msocket}{S1}$ $\sigma = 67339.9\,psi$

Shear stress $\tau soc := \dfrac{|Smax|}{As}$ $\tau soc = 17554.6\,psi$

Axial tension stress $\sigma a := \dfrac{Pf}{As}$ $\sigma a = 1053.503\,psi$

Stress Ratios

Axial (ult) $Ra := \dfrac{\sigma a \cdot FSu}{Ftu \cdot c3tu}$ $Ra = 0.007$

Bending (ult) $Rb := \dfrac{FSu \cdot \sigma}{Fbu \cdot c3tu}$ $Rb = 0.344$

Shear (ult) $Rs := \dfrac{FSu \cdot \tau soc}{Fsu \cdot c3tu}$ $Rs = 0.2$

Axial (yld) $Ray := \dfrac{\sigma a \cdot FSy}{Fty \cdot c3ty}$ $Ray = 0.006$

Bending (yld) $Rby := \dfrac{FSy \cdot \sigma}{Fby \cdot c3ty}$ $Rby = 0.37$

Shear(yld) $Rsy := \dfrac{FSy \cdot \tau soc}{0.50Fty \cdot c3ty}$ $Rsy = 0.211$

Margins of safety

Margin of safety ultimate $MSu := \frac{1}{\sqrt{(Ra + Rb)^2 + Rs^2}} - 1$ $MSu = 1.47$

Margin of safety yield $MSy := \frac{1}{\sqrt{(Ray + Rby)^2 + Rsy^2}} - 1$ $MSy = 1.32$

Abort Landing Case:

Max.load in y direction $Pr := 9118.63 \cdot lbf$ (Ref.AMS-02, loads model 2-04, Load case 2017, element ID 5, data file: maxtrunnionforces2000.lis)

The tolerances between the Tube and the Block are tight. Due to this tight tolerance, any side load transferred through the Tube to the Retainer would result in small deflections of the Retainer. This would result in the side load being reacted between the Tube and the Block due to these tight tolerances.

Moment arm from load to edge of keel joint $d2 := 5.8 \cdot in + 0.5 \cdot in$

(Ref. CAD model for 5.8" dimension) $d2 = 6.3\,in$

(Ref. Appendix C6 for the 0.5" dynamic excursion)

Max.bending moment at edge of keel joint $Mb := Pr \cdot d2$

$Mb = 57447.4\,in \cdot lbf$

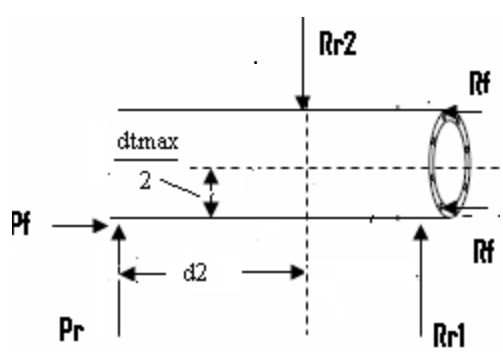

Friction coefficient is assessed based on Figure 4.1.1.1-1 of NSTS-21000-IDD-ISS, Ref. Appendix C7.

$P := Pr$ $P = 9119\,lbf$

$T := 40 \cdot deg$ (It is conservative to use the minimum temperature (Ref. Appendix C2))

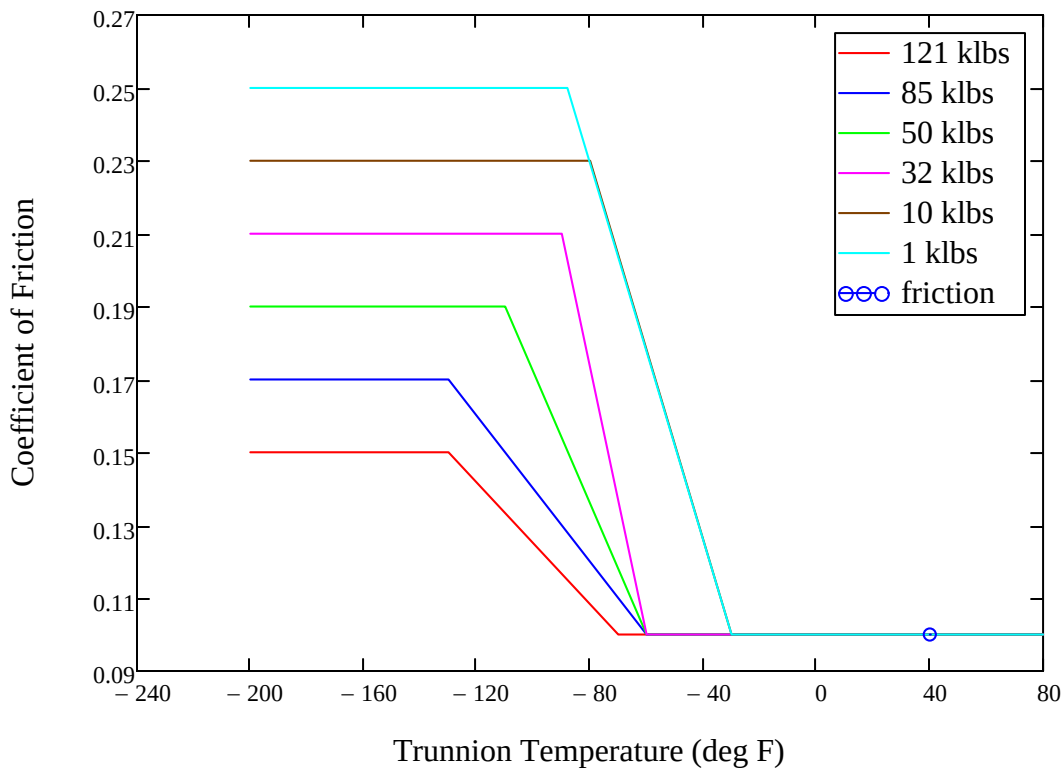

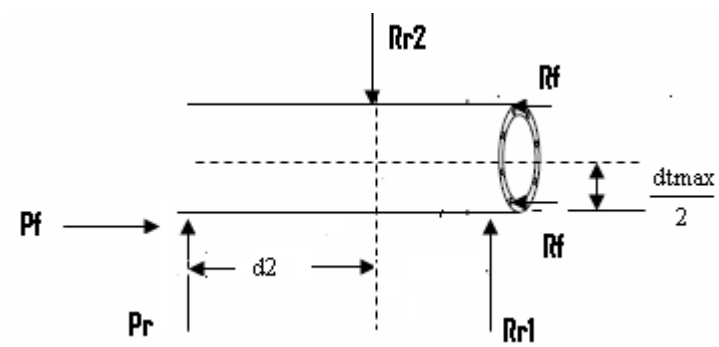

Friction coefficient $\mu = 0.100$

Friction load 10% of load $Pf := Pr \cdot \mu$ $\quad Pf = 911.9\,lbf$

Friction moment $Mf := Pf \cdot \frac{dtmax}{2}$ $\quad Mf = 1364.6\,in \cdot lbf$

Total moment $M := Mb + Mf$ $\quad M = 58812\,in \cdot lbf$

Applied limit stress in shaft $\sigma l := \left(Mb \cdot \frac{dtmax}{2 \cdot Is}\right)$ $\quad \sigma l = 37644.4\,psi$

Plastic bending allowable (Ref.NASA TM X-73305,sect B.4.5)

Section factor

Outer radius $ro := \frac{dto}{2}$ $ro = 1.495\,in$

Inner radius $ri := \frac{dt89}{2}$ $ri = 1.202\,in$

Area of semicircular segment $Ase := \frac{\pi}{2}\cdot\left(ro^2 - ri^2\right)$ $Ase = 1.241\,in^2$

Distance of neutral axis from center line $ybar := \frac{4}{3\cdot\pi}\cdot\left(\frac{ro^3 - ri^3}{ro^2 - ri^2}\right)$ $ybar = 0.862\,in$

First moment of area $Q := Ase\cdot ybar$ $Q = 1.069\,in^3$

Distance of extreme fiber from centerline of shaft $c := \frac{dtmax}{2}$ $c = 1.496\,in$

Section factor $K := \frac{2\cdot Q\cdot c}{Is}$ $K = 1.4016$

Allowable bending modulus of rupture ult. $\sigma p := 272000\cdot psi$ (Ref.NASA TM X-73305,sect B.4.5 fig. B4.5.5.2-7)

Allowable bending modulus of rupture yld. $\sigma y := 200000\cdot psi$

Check

Section factor $K := 1.698\cdot\frac{ro\cdot\left(ro^3 - ri^3\right)}{ro^4 - ri^4}$ $K = 1.4007$ (Ref. Formulas for Stress, Strain, and Structural Matrices, Table 2-2, Case 6)

$fmu := 200000\cdot psi$ $fou := 192000\cdot psi$ (Ref. Bruhn, table C3.2 page C3.11)

$fmy := 176000\cdot psi$ $foy := 65000\cdot psi$

$Fbu := fmu + fou\cdot(K - 1)$ $Fbu = 276942.5\,psi$ (Ref. Bruhn page C3.3, equation 3)

$Fby := fmy + foy\cdot(K - 1)$ $Fby = 202048.2\,psi$ (These numbers match the σp and σy closely)

Axial tension stress $\sigma a := \frac{Pf}{As}$ $\sigma a = 367.52\,psi$

Shear stress $\tau := \frac{Pr}{As}$ $\tau = 3675.201\,psi$

Stress ratios, Ultimate

Stress ratio in tension, ultimate $Rau := \frac{\sigma a \cdot FSu}{Ftu \cdot c2tu}$ $Rau = 0.003$

Stress ratio in bending, ultimate $Rbu := \frac{\sigma l \cdot FSu}{Fbu \cdot c2tu}$ $Rbu = 0.196$

Stress ratio in shear, ultimate $Rsu := \frac{\tau \cdot FSu}{Fsu \cdot c2tu}$ $Rsu = 0.043$

Margin of safety ultimate $MSu := \frac{1}{\sqrt{(Rau + Rbu)^2 + Rsu^2}} - 1$ $MSu = 3.92$

Stress ratios, Yield

Stress ratio in tension, yield $Ray := \frac{\sigma a \cdot FSy}{Fty \cdot c2ty}$ $Ray = 0.002$

Stress ratio in bending, yield $Rby := \frac{\sigma l \cdot FSy}{Fby \cdot c2ty}$ $Rby = 0.211$

Stress ratio in shear, yield $Rsy := \frac{\tau \cdot FSy}{0.5Fty \cdot c2ty}$ $Rsy = 0.045$

Margin of safety, yield $MSy := \frac{1}{\sqrt{(Ray + Rby)^2 + Rsy^2}} - 1$ $MSy = 3.58$

Beam and Socket analysis - Abort Landing Case

Treating the connection as a Beam in a Socket, as per SMM, Memo 41a

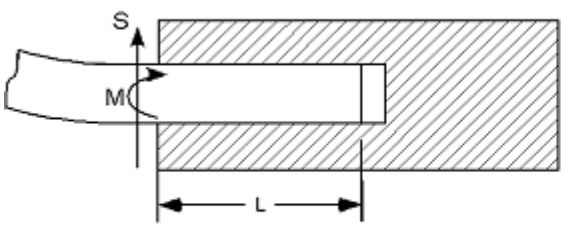

S and M are respectively beam shear in lbf and moment in in-lbf at end of socket. W is unit loading in lbf/in.

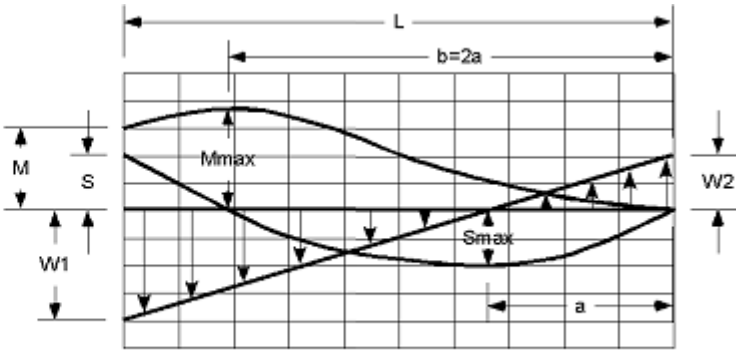

Resultant shear Load $S := Pr$ $S = 9119\,lbf$

Moment at edge of sill joint $M := Mb + Mf$ $M = 58812\,in \cdot lbf$

Length of overlap $L := 3.874 \cdot in$

$$slm_ratio := if\left(M = 0, 1000, S \cdot \frac{L}{M}\right) \qquad slm_ratio = 0.601$$

$$mls_ratio := if\left(S = 0, 1000, \frac{M}{S \cdot L}\right) \qquad mls_ratio = 1.665$$

Prepared By	Name	Date		File Name
	Brent Dyer	01/25/06		uss_keel_trunnion.mcd
Checked By	John Krejci		**Engineering and Science Contract Group** *Structural Analysis Section*	Drawing No. SDG39135772
Title	USS-02 Keel Trunnion			

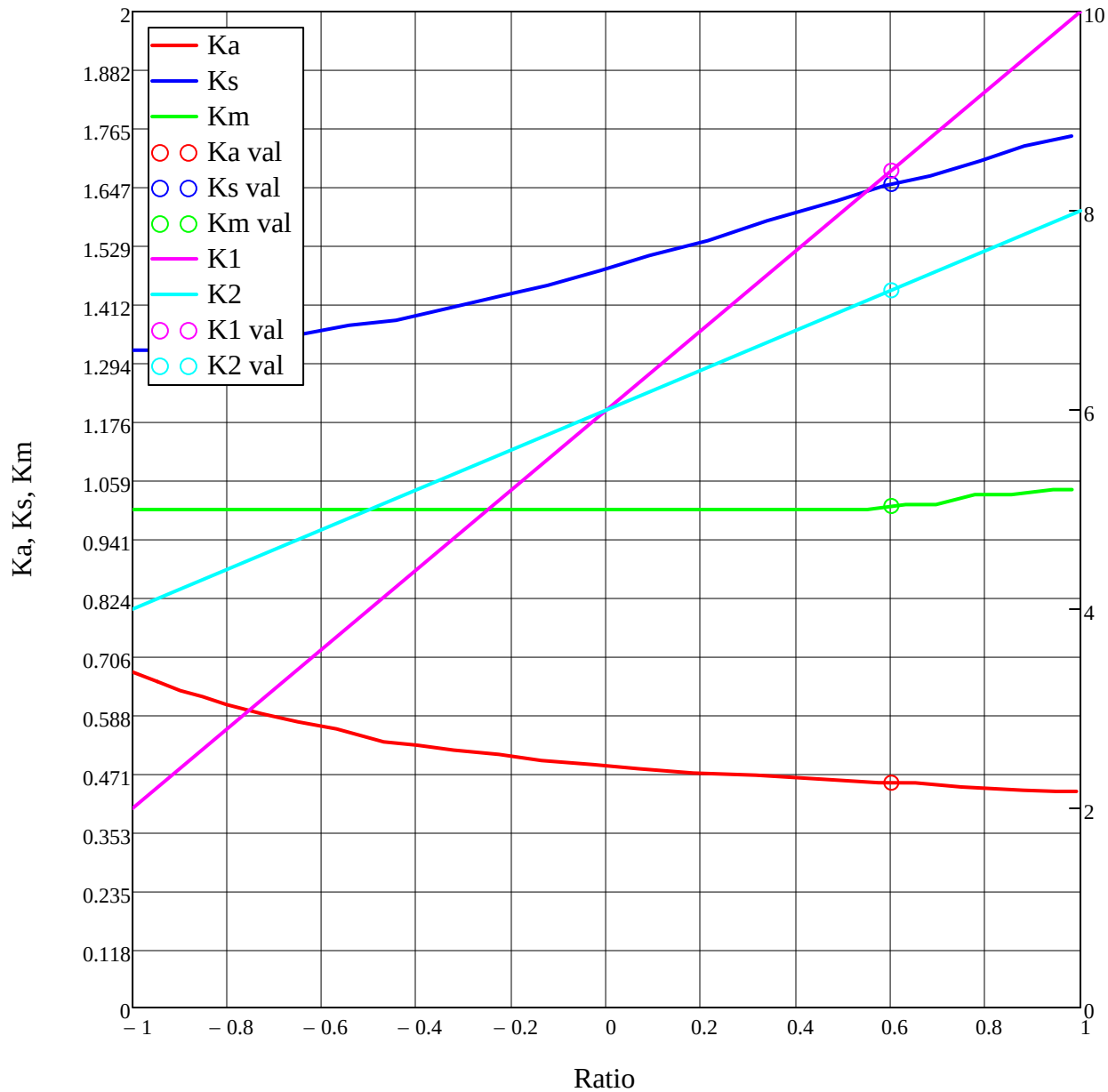

Beam and Socket Coefficients
Note if abs(SL/M) <= 1, Ratio = SL/M, otherwise Ratio = M/SL.

Coefficients are:

Ka = 0.452 Ks = 1.654 Km = 1.007

K1 = 8.403 K2 = 7.201

Calculated values are then:

$$w1 := \begin{cases} \dfrac{K1 \cdot M}{L^2} & \text{if } |slm_ratio| \le 1 \\ \dfrac{K1 \cdot S}{L} & \text{otherwise} \end{cases} \qquad w1 = 32927.7 \frac{lbf}{in}$$

$$w2 := \begin{cases} \dfrac{K2 \cdot M}{L^2} & \text{if } |slm_ratio| \le 1 \\ \dfrac{K2 \cdot S}{L} & \text{otherwise} \end{cases} \qquad w2 = 28220 \frac{lbf}{in}$$

$$a := Ka \cdot L \qquad a = 1.749\ in$$

Max. shear

$$Smax := \begin{cases} \dfrac{-Ks \cdot M}{L} & \text{if } |slm_ratio| \le 1 \\ -Ks \cdot S & \text{otherwise} \end{cases} \qquad Smax = -25104.7\ lbf$$

Max. Bending moment

$$Mmax := \begin{cases} Km \cdot M & \text{if } |slm_ratio| \le 1 \\ Km \cdot S \cdot L & \text{otherwise} \end{cases} \qquad Mmax = 59236.8\ in \cdot lbf$$

Now check:

$$Sc := \frac{w1 - w2}{2} \cdot L \qquad Sc = 9.1 \times 10^3\ lbf$$

$$Mc := \frac{-w1 + 2 \cdot w2}{6} \cdot L^2 \qquad Mc = 58812\ in \cdot lbf$$

Percent error:

$$S_percentdiff := \frac{S - Sc}{S} \qquad S_percentdiff = 0\ \%$$

$$M_percentdiff := \frac{M - Mc}{M} \qquad M_percentdiff = -0\ \%$$

Prepared By	Name	Date		File Name
	Brent Dyer	01/25/06		uss_keel_trunnion.mcd
Checked By	John Krejci		**Engineering and Science Contract Group** *Structural Analysis Section*	Drawing No. SDG39135772
Title	USS-02 Keel Trunnion			

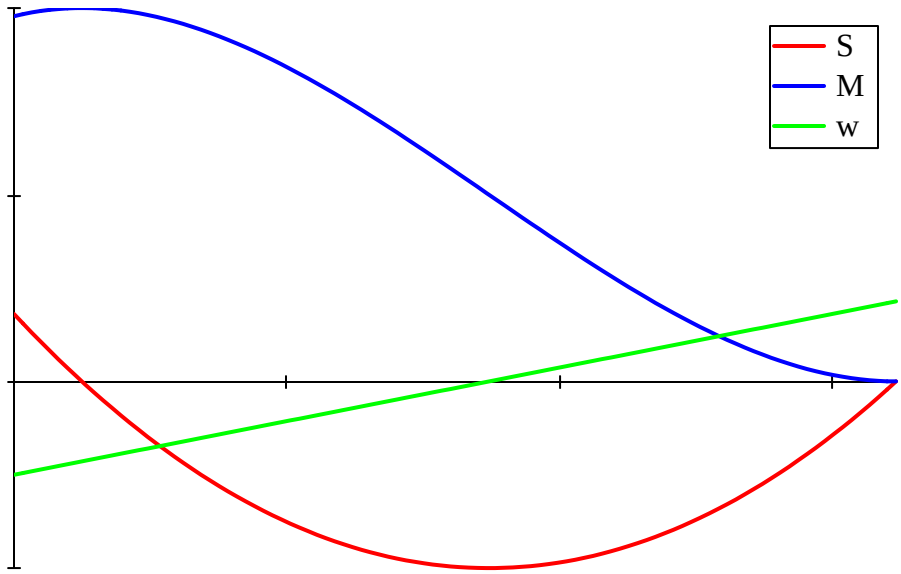

Actual Shear and Moment Distribution Inside Socket

In the following calculation, conservatively, the maximum values of the bending moment and shear are used.

Max. Shear $Smax = -25104.7\ lbf$

Max. Bending moment $Mmax = 59236.8\ in \cdot lbf$ (see page 2.3.4-9)

Section properties (see page 2.3.4-2 and 3)

Area of cross-section $As = 2.481\ in^2$

Moment of inertia $Is = 2.284\ in^4$

Section modulus $S1 := \dfrac{Is}{\dfrac{dtmax}{2}}$ $S1 = 1.526\ in^3$

Stresses

Total moment $Msocket := Mmax$ $Msocket = 59236.8\ in \cdot lbf$

Bending Tensile stress $\sigma := \dfrac{Msocket}{S1}$ $\sigma = 38817\ psi$

Shear stress $\tau soc := \dfrac{|Smax|}{As}$ $\tau soc = 10118.3\ psi$

Axial tension stress $\sigma a := \dfrac{Pf}{As}$ $\sigma a = 367.52\ psi$

Stress Ratios

Axial (ult) $Ra := \dfrac{\sigma a \cdot FSu}{Ftu \cdot c2tu}$ $Ra = 0.003$

Bending (ult) $Rb := \dfrac{FSu \cdot \sigma}{Fbu \cdot c2tu}$ $Rb = 0.202$

Shear (ult) $Rs := \dfrac{FSu \cdot \tau soc}{Fsu \cdot c2tu}$ $Rs = 0.118$

Axial (yld) $Ray := \dfrac{\sigma a \cdot FSy}{Fty \cdot c2ty}$ $Ray = 0.002$

Bending (yld) $Rby := \dfrac{FSy \cdot \sigma}{Fby \cdot c2ty}$ $Rby = 0.218$

Shear(yld) $Rsy := \dfrac{FSy \cdot \tau soc}{0.50Fty \cdot c2ty}$ $Rsy = 0.124$

Margins of safety

Margin of safety ultimate $$MSu := \frac{1}{\sqrt{(Ra + Rb)^2 + Rs^2}} - 1 \qquad MSu = 3.23$$

Margin of safety yield $$MSy := \frac{1}{\sqrt{(Ray + Rby)^2 + Rsy^2}} - 1 \qquad MSy = 2.96$$

2.3.5 Keel Retainer

Keel Retainer Analysis

The objective of this analysis is to demonstrate the structural strength of the Keel Retainer. Flat plate stress calculations and FEA stresses are compared. The Keel Retainer (SDG39135773) is mounted on both the Keel Trunion (SDG 39135772) and Keel Block (SDG 39135770).

The tolerances between the keel trunnion and the keel block are tight. Due to this tight tolerance, any side load transferred through the keel trunnion to the keel retainer would result in small deflections of the Retainer. This would result in the side load being reacted between the keel trunnion and the keel block due to these tight tolerances.

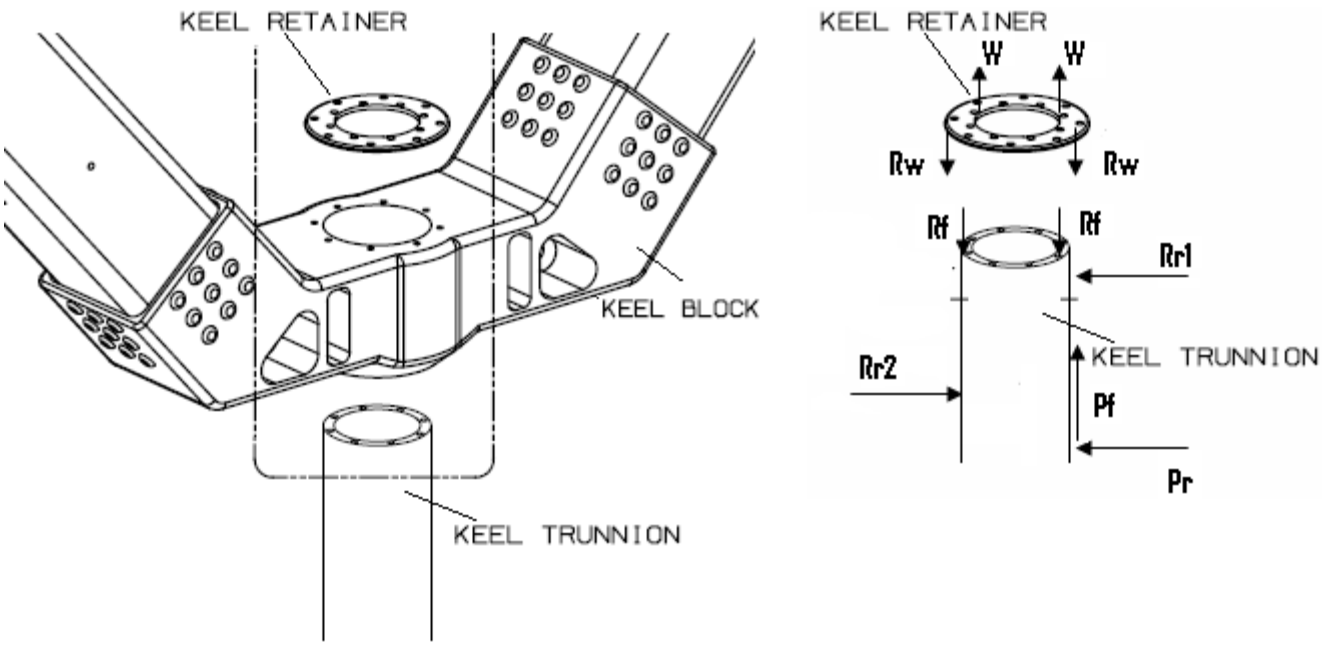

a) Location of Keel Retainer

b) Free Body Diagram

Figure 2.3.5-1 Keel Assembly SEG39135768

Loads:

The maximum axial load in the keel trunnion comes from the Nominal Landing Case 4051 from loads model 2-04 (Ref. Section 2.3.4 "USS-02 Keel Trunnion" and Appendix A2)

Applied normal loads from the Keel Trunnion $Pr := 15595.9 \cdot lbf$

Axial Friction load 16.8% of normal load $Pf := Pr \cdot .168$ $Pf = 2620.1\,lbf$

Factors of Safety :

$FSu := 1.4$ Ultimate factor of safety

$FSy := 1.1$ Yield factor of safety

Temperature Data for Nominal Landing:
(Ref. MIL-HDBK-5J, figure 2.6.7.1.1 and Appendix C2)

$Tmin := -56 \cdot deg$ $Tmax := 181 \cdot deg$

Ftu Temperature Correction Factor $Tftu := .95$

Fty Temperature Correction Factor $Tfty := .95$

Material Properties for 15-5PH (H1025):
(Ref. MIL-HDBK-5J, table 2.6.7.0 (c))

Ultimate Tensile Allowable $Ftu := 155000 \cdot psi \cdot Tftu$ $Ftu = 147250\, psi$

Yield Tensile Allowable $Fty := 145000 \cdot psi \cdot Tfty$ $Fty = 137750\, psi$

Shear allowable $Fsu := 97000 \cdot psi \cdot Tftu$ $Fsu = 92150\, psi$

Modulus of elasticity: $E := 28.5 \cdot 10^6 \cdot \frac{lbf}{in^2}$

Poisson's ratio: $\nu := 0.27$

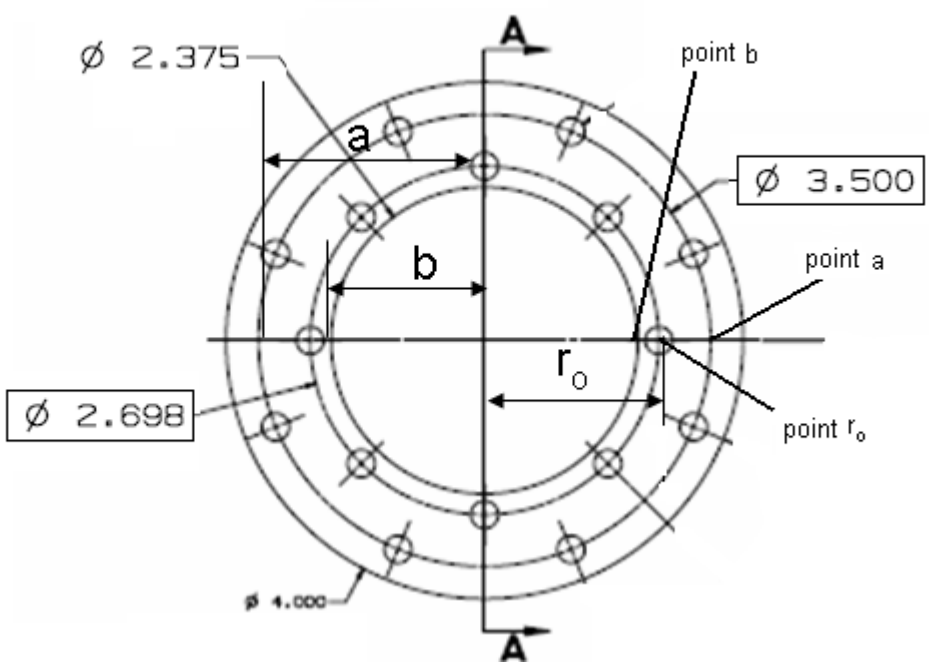

Figure 2.3.5-2 Keel Retainer

Flat Plate Method:

Flate annular plate with a uniform annular line load w at radius r_o
(Ref. *Roark's Formulas for Stress and Strain,* Table 24)

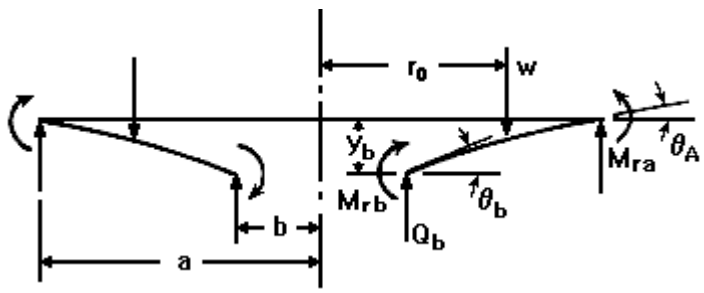

Outer edge fixed, inner edge free (Ref. Table 24, Case 1e)

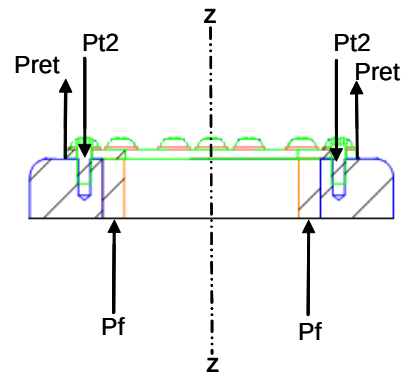

Upward Motion of Trunnion

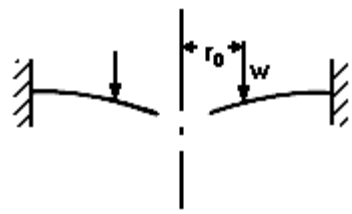

Geometry:
(Ref. SDG39135773)

Plate thickness:	$t := 0.125 \cdot in$	Diameter of Retainer to Block Bolt Pattern	$ODbbp := 3.50 \cdot in$
Inner Diameter of Trunnion Block (Ref. SDG39135770)	$IDbl := 3.0011 \cdot in$	Diameter of Retainer to Trunnion Bolt Pattern	$ODtbp := 2.698 \cdot in$
Inner Diameter of Trunnion Retainer	$IDb := 2.375 \cdot in$	Outer Diameter of Trunnion Retainer	$ODtr := 4.00 \cdot in$

Location of Line Load:

bolt hole pattern outer radius: $a := \frac{ODbbp}{2}$ $\quad a = 1.75\,in$

inner radius: $b := \frac{IDb}{2}$ $\quad b = 1.188\,in$

Radial location of applied line load: $r_o := \frac{ODtbp}{2}$ $\quad r_o = 1.349\,in$

Prepared By	Name	Date		File Name
	Brent Dyer	01/07/06		keel retainer.mcd
Checked By	John Krejci		**Engineering and Science Contract Group** *Structural Analysis Section*	Drawing No. SDG39135773
Title	Keel Retainer Analysis			

General Plate Functions and Constants:

$$F_1(r) := \left[\frac{1+\nu}{2}\cdot\frac{b}{r}\cdot\ln\left(\frac{r}{b}\right) + \frac{1-\nu}{4}\cdot\left(\frac{r}{b} - \frac{b}{r}\right)\right]$$

$$F_2(r) := \frac{1}{4}\cdot\left[1 - \left(\frac{b}{r}\right)^2\cdot\left(1 + 2\cdot\ln\left(\frac{r}{b}\right)\right)\right]$$

$$F_3(r) := \frac{b}{4\cdot r}\cdot\left[\left[\left(\frac{b}{r}\right)^2 + 1\right]\cdot\ln\left(\frac{r}{b}\right) + \left(\frac{b}{r}\right)^2 - 1\right]$$

$$F_4(r) := \frac{1}{2}\cdot\left[(1+\nu)\cdot\frac{b}{r} + (1-\nu)\cdot\frac{r}{b}\right]$$

$$F_5(r) := \frac{1}{2}\cdot\left[1 - \left(\frac{b}{r}\right)^2\right]$$

$$F_6(r) := \frac{b}{4\cdot r}\cdot\left[\left(\frac{b}{r}\right)^2 - 1 + 2\cdot\ln\left(\frac{r}{b}\right)\right]$$

$$F_7(r) := \frac{1}{2}\cdot\left(1-\nu^2\right)\cdot\left(\frac{r}{b} - \frac{b}{r}\right)$$

$$F_8(r) := \frac{1}{2}\cdot\left[1 + \nu + (1-\nu)\cdot\left(\frac{b}{r}\right)^2\right]$$

$$F_9(r) := \frac{b}{r}\cdot\left[\frac{1+\nu}{2}\cdot\ln\left(\frac{r}{b}\right) + \frac{1-\nu}{4}\cdot\left[1 - \left(\frac{b}{r}\right)^2\right]\right]$$

$$C_1 := \left[\frac{1+\nu}{2}\cdot\frac{b}{a}\cdot\ln\left(\frac{a}{b}\right) + \frac{1-\nu}{4}\cdot\left(\frac{a}{b} - \frac{b}{a}\right)\right]$$

$$C_4 := \frac{1}{2}\cdot\left[(1+\nu)\cdot\frac{b}{a} + (1-\nu)\cdot\frac{a}{b}\right]$$

$$C_7 := \frac{1}{2}\cdot\left(1-\nu^2\right)\cdot\left(\frac{a}{b} - \frac{b}{a}\right)$$

$$L_3 := \frac{r_o}{4\cdot a}\cdot\left[\left[\left(\frac{r_o}{a}\right)^2 + 1\right]\cdot\ln\left(\frac{a}{r_o}\right) + \left(\frac{r_o}{a}\right)^2 - 1\right]$$

$$L_6 := \frac{r_o}{4\cdot a}\cdot\left[\left(\frac{r_o}{a}\right)^2 - 1 + 2\cdot\ln\left(\frac{a}{r_o}\right)\right]$$

$$L_9 := \frac{r_o}{a}\cdot\left[\frac{1+\nu}{2}\cdot\ln\left(\frac{a}{r_o}\right) + \frac{1-\nu}{4}\cdot\left[1 - \left(\frac{r_o}{a}\right)^2\right]\right]$$

$$G_3(r) := \frac{r_o}{4\cdot r}\cdot\left[\left[\left(\frac{r_o}{r}\right)^2 + 1\right]\cdot\ln\left(\frac{r}{r_o}\right) + \left(\frac{r_o}{r}\right)^2 - 1\right]\cdot\left(r \ge r_o\right)$$

$$G_6(r) := \frac{r_o}{4\cdot r}\cdot\left[\left(\frac{r_o}{r}\right)^2 - 1 + 2\cdot\ln\left(\frac{r}{r_o}\right)\right]\cdot\left(r \ge r_o\right)$$

$$G_9(r) := \frac{r_o}{r}\cdot\left[\frac{1+\nu}{2}\cdot\ln\left(\frac{r}{r_o}\right) + \frac{1-\nu}{4}\cdot\left[1 - \left(\frac{r_o}{r}\right)^2\right]\right]\cdot\left(r \ge r_o\right)$$

Total Applied Load: $W := Pf$ $\quad W = 2620.1\,\text{lbf}$

Applied unit load: $w := \dfrac{W}{2\cdot\pi\cdot r_o}$ $\quad w = 309.121\,\dfrac{\text{lbf}}{\text{in}}$

Shear modulus: $G := \dfrac{E}{2\cdot(1+\nu)}$ $\quad G = 1.122\times 10^{7}\,\text{psi}$

Plate Constant: $D := \dfrac{E\cdot t^{3}}{12\cdot\left(1-\nu^{2}\right)}$ $\quad D = 5003.4\,\text{lbf}\cdot\text{in}$

Boundary Values for deformation, moments, and shear:

Unit Radial Moment at End b: $M_{rb} := 0\cdot\dfrac{\text{lbf}\cdot\text{in}}{\text{in}}$

Unit Shear Force at End b: $Q_b := 0\cdot\dfrac{\text{lbf}}{\text{in}}$

Deflection at End a: $y_a := 0\cdot\text{in}$

Radial Slope at End a: $\theta_a := 0\cdot\text{deg}$

Deflection at End b: $y_b := \dfrac{-w\cdot a^{3}}{D}\cdot\left(\dfrac{C_1\cdot L_6}{C_4} - L_3\right)$ $\quad y_b = -0.002\,\text{in}$

Radial Slope at End b: $\theta_b := \dfrac{w\cdot a^{2}}{D\cdot C_4}\cdot L_6$ $\quad \theta_b = 0.247\,\text{deg}$

Unit Radial Moment at End a: $M_{ra} := -w\cdot a\cdot\left(L_9 - \dfrac{C_7\cdot L_6}{C_4}\right)$ $\quad M_{ra} = -95.245\,\dfrac{\text{lbf}\cdot\text{in}}{\text{in}}$

Unit Shear Force at End a: $Q_a := -w\cdot\dfrac{r_o}{a}$ $\quad Q_a = -238.288\,\dfrac{\text{lbf}}{\text{in}}$

General Expressions for deformation, moments, and shear:

Deflection: Define r, the range of the radius: $r := (b, 1.0001 \cdot b .. a)$

$$y(r) := y_b + \theta_b \cdot r \cdot F_1(r) + M_{rb} \cdot \frac{r^2}{D} \cdot F_2(r) + Q_b \cdot \frac{r^3}{D} \cdot F_3(r) - w \cdot \frac{r^3}{D} \cdot G_3(r)$$

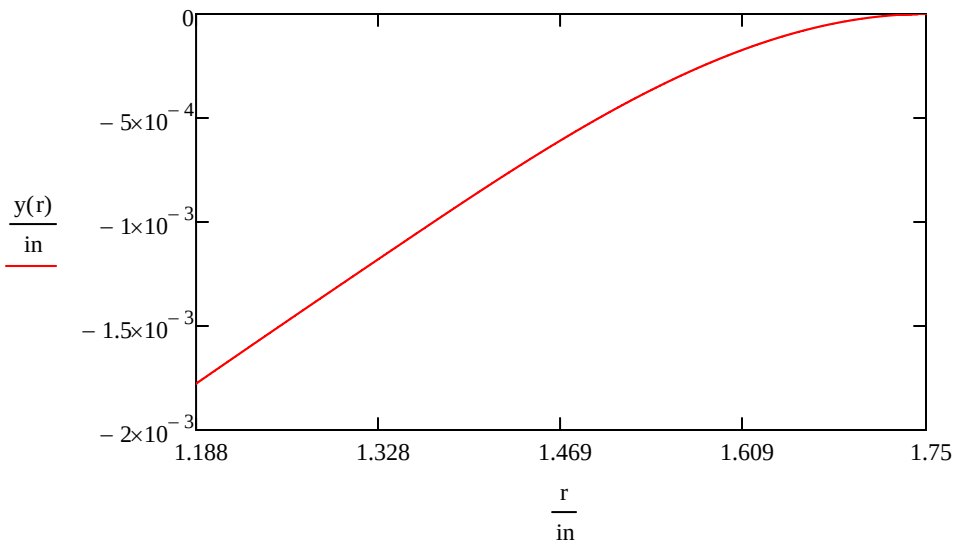

Deflection at points b and a (inner and outer radius) due to bending: $y_b = -0.0018\,\text{in}$ $y_a = 0\,\text{in}$

Large deflection condition check: $|y_{max}|$ is less than t/2 $\left(\frac{t}{2} = 0.0625\,\text{in} \right)$

(If $|y_{max}|$ is greater than t/2 , the equations in the table 24 are subject to large errors.)

Slope:

$$\theta(r) := \theta_b \cdot F_4(r) + M_{rb} \cdot \frac{r}{D} \cdot F_5(r) + Q_b \cdot \frac{r^2}{D} \cdot F_6(r) - w \cdot \frac{r^2}{D} \cdot G_6(r)$$

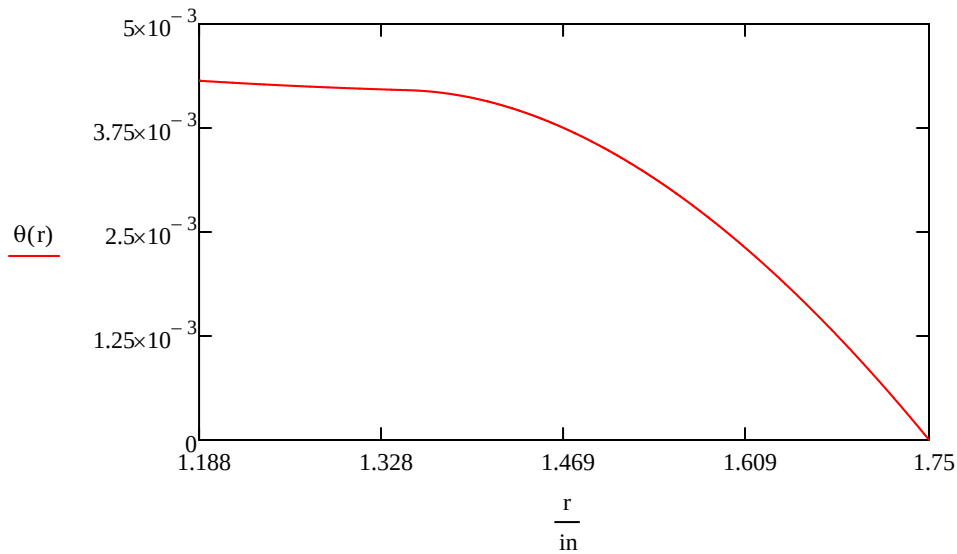

Slope at points b and a (inner and outer radius): $\theta_b = 0.247\ \text{deg}$ $\theta_a = 0\ \text{deg}$

Radial moment:

$$M_r(r) := \theta_b \cdot \frac{D}{r} \cdot F_7(r) + M_{rb} \cdot F_8(r) + Q_b \cdot r \cdot F_9(r) - w \cdot r \cdot G_9(r)$$

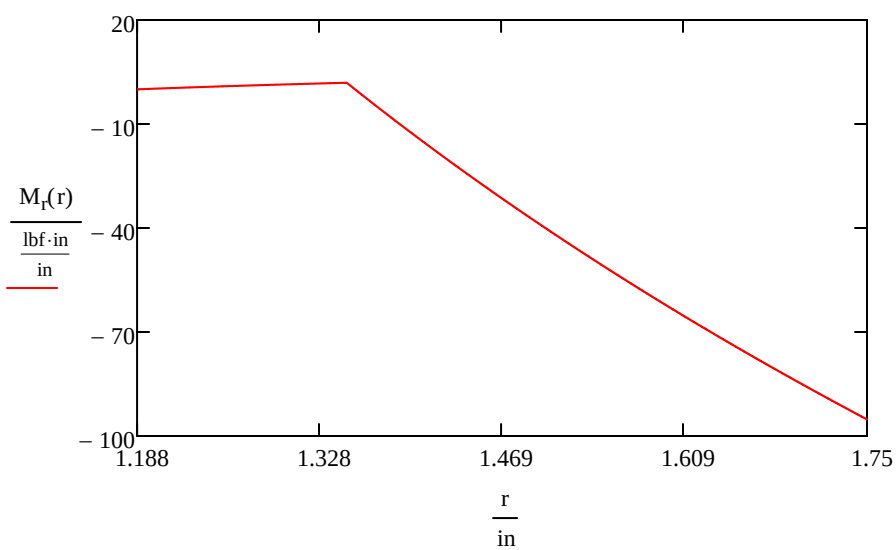

Radial moment at points b and a due to bending: $M_{rb} = 0\ \frac{\text{lbf}\cdot\text{in}}{\text{in}}$ $M_{ra} = -95.245\ \frac{\text{lbf}\cdot\text{in}}{\text{in}}$

Transverse moment: $M_t(r) := \frac{\theta(r)\cdot D\cdot\left(1-\nu^2\right)}{r} + \nu\cdot M_r(r)$

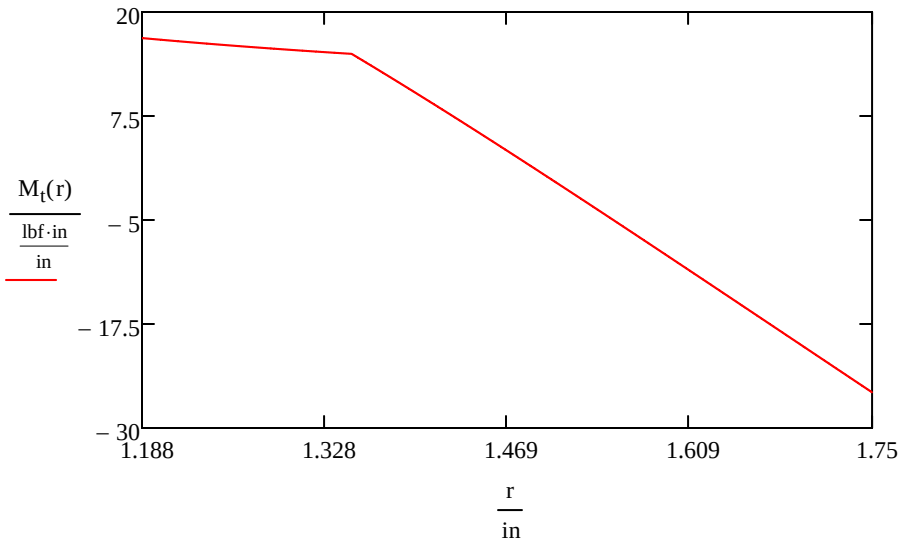

Transverse moment at points b and a due to bending: $M_t(b) = 16.867\,\frac{lbf\cdot in}{in}$ $M_t(a) = -25.716\,\frac{lbf\cdot in}{in}$

Shear: $Q(r) := Q_b\cdot\frac{b}{r} - w\cdot\frac{r_o}{r}\cdot\left(r \ge r_o\right)$

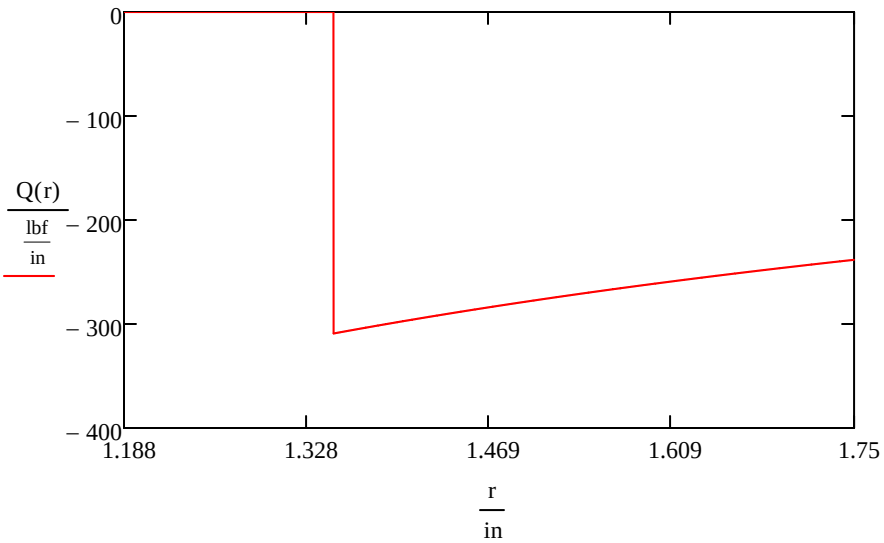

Shear force per unit length at points b and a due to bending: $Q_b = 0\,\frac{lbf}{in}$ $Q_a = -238.288\,\frac{lbf}{in}$

Radial bending stress: $\sigma_r(r) := \frac{6 \cdot M_r(r)}{t^2}$

Radial bending stress at points b and a (inner and outer radius):

$\sigma_r(b) = 0\,\text{psi}$ $\sigma_r(a) = -36574.1\,\text{psi}$

Transverse bending stress: $\sigma_t(r) := \frac{6 \cdot M_t(r)}{t^2}$

Transverse bending stress at points b and a (inner and outer radius):

$\sigma_t(b) = 6477\,\text{psi}$ $\sigma_t(a) = -9875\,\text{psi}$

Stresses:

Where σs is shear stress, σb is the bending stress, S is principal Stress, and σeq is Von Mises equivalent stress.

$\sigma_s := \frac{|Q_a|}{t}$ $\sigma_s = 1906.3\,\text{psi}$

$\sigma_b := |\sigma_r(a)| + |\sigma_t(a)|$ $\sigma_b = 46449\,\text{psi}$

$\sigma := \begin{pmatrix} \sigma_b & \sigma_s & 0 \\ \sigma_s & 0 & 0 \\ 0 & 0 & 0 \end{pmatrix}$ $S := \text{eigenvals}(\sigma)$ $S = \begin{pmatrix} 46527 \\ -78 \\ 0 \end{pmatrix}\text{psi}$ (Principal stress)

$\sigma_{eq} := \sqrt{\frac{(S_0 - S_1)^2 + (S_1 - S_2)^2 + (S_2 - S_0)^2}{2}}$ $\sigma_{eq} = 46566\,\text{psi}$ (Von Mises stress)

$\tau_{max} := \frac{S_0 - S_1}{2}$ $\tau_{max} = 23303\,\text{psi}$ (Max shear)

Margin of safety against yield failure:

$$MS_y := \frac{Fty}{FSy \cdot \sigma_{eq}} - 1$$

$MS_y = 1.689$

Margin of safety against ultimate failure:

$$MS_u := \frac{Ftu}{FSu \cdot S_0} - 1$$

$MS_u = 1.261$

Margin of safety against ultimate failure (shear):

$$MS_u := \frac{Fsu}{FSu \cdot \tau_{max}} - 1$$

$MS_u = 1.825$

2.4 USS-02 Bolt and Shear Pin and Bushing Strength Assessment

2.4.1 Upper USS-02 Bolted Interfaces

Upper USS-02 Bolted Interfaces

The Upper USS-02 Bolt Analysis is performed in the following report sections.

2.4.1.1	Upper Interface Plate to USS-02
2.4.1.1	Upper Interface Plate to USS-02 Fail-Safe
2.4.1.1	Upper Interface Plate to USS-02 Fail Safe (Shear Pin Failure)
2.4.1.2	Lower Interface Plate to USS-02
2.4.1.2	Lower Interface Plate to USS-02 Fail-Safe
2.4.1.2	Lower Interface Plate to USS-02 Fail-Safe (Shear Pin Failure)
2.4.1.3	TRD Corner Bracket to Upper Vacuum Case Joint
2.4.1.3	TRD Corner Bracket to Upper Vacuum Case Joint Fail Safe
2.4.1.3	TRD Corner Bracket to Upper Vacuum Case Joint Fail Safe (Shear Pin Failure)
2.4.1.4	Sill Bracket to Sill Joint
2.4.1.4	Sill Bracket to Sill Joint Fail-Safe
2.4.1.5	Diagonal Sill Bracket to Sill Joint
2.4.1.5	Diagonal Sill Bracket to Sill Joint Fail-Safe

2.4.1.1 Upper Interface Plate to USS-02

Upper Vacuum Case Interface Plate to USS-02 Bolt Analysis

The USS-02 assembly consists of four Upper Vaccum Case (VC) Joints. There are a total of 8 fasteners attaching the USS-02 to the upper interface plate. The fasteners are NAS1958C (180 ksi), 0.50-20 UNFJ. There is also one shear pin 0.875" in diameter. The drawing number for the USS-02 Assembly to Vaccuum Case Assembly is SDG39135724.

Bolt Geometry

size thread/in

$$bolt := \begin{pmatrix} 0.50 & 20 \\ 0.50 & 20 \\ 0.50 & 20 \\ 0.50 & 20 \\ 0.50 & 20 \\ 0.50 & 20 \\ 0.50 & 20 \\ 0.50 & 20 \end{pmatrix}$$

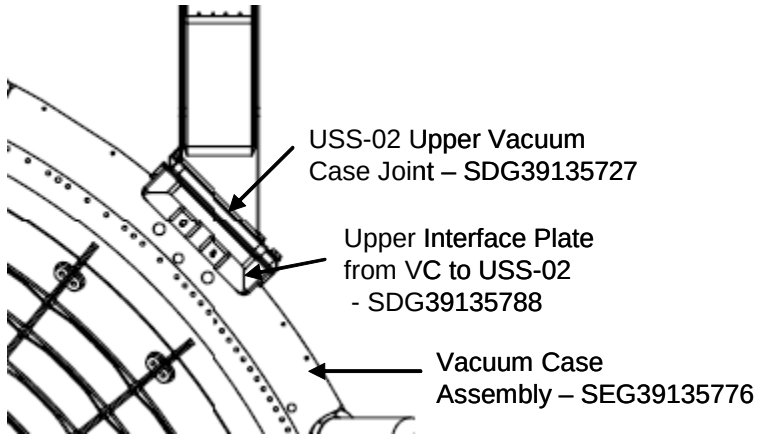

Top View of Vacuum Case (VC) and USS-02 Assembly

$i := 1 .. rows(bolt)$

$N_i := bolt_{i,2} \cdot \frac{1}{in}$ pitch of bolt

$D_i := bolt_{i,1} \cdot in$ bolt diameter

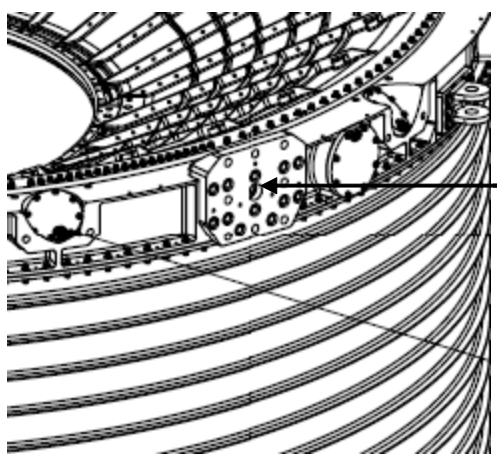

Side View of Vacuum Case Assembly

$$At_i := \pi \cdot \left(\frac{D_i - 0.9743 \cdot \frac{1}{N_i}}{2} \right)^2$$ Tensile Area of bolt

$$As_i := \pi \cdot \left(\frac{D_i - 1.299038 \cdot \frac{1}{N_i}}{2} \right)^2$$ Shear Area of bolt

Prepared By	Name	Date	Engineering and Science Contract Group	File Name
	Brent Dyer	08/05/05		UI_USS_r3.mcd
Checked By	John Krejci		*Structural Analysis Section*	Drawing No. SDG39135724
Title	Bolts from Upper Vacuum Case Interface Plate to USS			

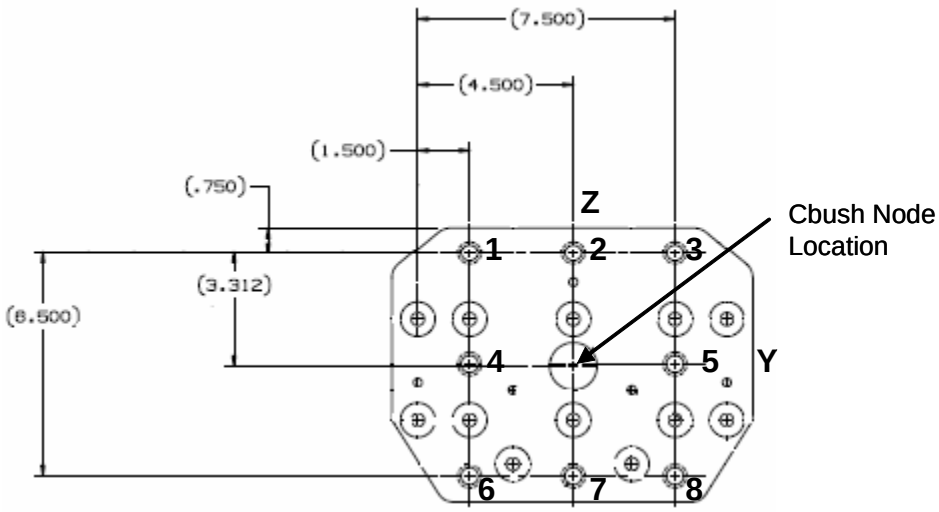

Upper Vacuum Case Interface Plate to USS-02 Bolt Pattern

Bolt no.	x co-ord	y co-ord	z co-ord
1	0.0	–3.0	3.312
2	0.0	0.0	3.312
3	0.0	3.0	3.312
4	0.0	–3.0	0.062
5	0.0	3.0	0.062
6	0.0	–3.0	–3.188
7	0.0	0.0	–3.188
8	0.0	3.0	–3.188

$$x := \begin{pmatrix} 0.0 \\ 0.0 \\ 0.0 \\ 0.0 \\ 0.0 \\ 0.0 \\ 0.0 \\ 0.0 \end{pmatrix} \cdot in \qquad y := \begin{pmatrix} -3.0 \\ 0.0 \\ 3.0 \\ -3.0 \\ 3.0 \\ -3.0 \\ 0.0 \\ 3.0 \end{pmatrix} \cdot in \qquad z := \begin{pmatrix} 3.312 \\ 3.312 \\ 3.312 \\ 0.062 \\ 0.062 \\ -3.188 \\ -3.188 \\ -3.188 \end{pmatrix} \cdot in$$

Location of applied forces and moments

$xforce := 0.0in \qquad yforce := 0.0in \qquad zforce := 0.0in$

$$cgload := \begin{pmatrix} xforce \\ yforce \\ zforce \end{pmatrix} \qquad cgload = \begin{pmatrix} 0 \\ 0 \\ 0 \end{pmatrix} in$$

Center of gravity of bolt group

$$xcg := \frac{\sum_i x_i}{rows(x)} \qquad xcg = 0\,in \qquad ycg := \frac{\sum_i y_i}{rows(y)} \qquad ycg = 0\,in \qquad zcg := \frac{\sum_i z_i}{rows(z)} \qquad zcg = 0.062\,in$$

$$cg_{bolt} := \begin{pmatrix} xcg \\ ycg \\ zcg \end{pmatrix} \qquad cg_{bolt} = \begin{pmatrix} 0 \\ 0 \\ 0.062 \end{pmatrix} in$$

Note: Since the x direction is into the plate the loads are shared equally between the bolts. The bolt pattern is symmetric about the y-axis with a zero offset from the center of gravity. However, in the z direction the bolt pattern is unsymmetric and has a .062" offset from the center of gravity.

Load Vector

$$r_{load} := cgload - cg_{bolt} \qquad r_{load} = \begin{pmatrix} 0 \\ 0 \\ -0.062 \end{pmatrix} in$$

Distance from CG of Bolts to Individual Bolts for shear calculations

$$r_i := \sqrt{\left(z_i - zcg\right)^2 + \left(y_i - ycg\right)^2} \qquad r = \begin{pmatrix} 4.423 \\ 3.250 \\ 4.423 \\ 3.000 \\ 3.000 \\ 4.423 \\ 3.250 \\ 4.423 \end{pmatrix} in$$

Loads model 2-04 was used to retrieve loads at the four bolted interfaces. A Cbush element located at the center of each interface plate was post processed in NASPOST for forces and moments in the x, y, and z directions. The Cbush element identifications for the four bolted interfaces are 66001, 66002. 66003, and 66004. These loads are read into an array and distributed out to the 8 bolts for each interface plate.

(Note: This joint was checked for minimum margins of safety for launch, nominal landing, and abort landing load cases. The abort landing cases combined with abort landing temperature data resulted in the lowest minimimum margins of safety. Therefore, the abort landing cases are used in this analysis.)

Reading database file for bolted joint , abort landing case

data := READPRN("upperussipf_r2_abortland.txt")

num_bolts := rows(bolt)

j := 1 .. rows(data)

Loads from 2-04 loads model, abort landing case

Axial Load $Fx_j := data_{j,3} \cdot lbf$

Torsion $Mx_j := data_{j,6} \cdot in \cdot lbf$

Shear in Y axis $Fy_j := data_{j,4} \cdot lbf$

Moment about Y axis $My_j := data_{j,7} \cdot in \cdot lbf$

Shear in Z axis $Fz_j := data_{j,5} \cdot lbf$

Moment about Z axis $Mz_j := data_{j,8} \cdot in \cdot lbf$

Element Identification $ID_j := data_{j,1}$

$ID_j := ID_j \cdot 10 + 1$ Counter for number of bolts in pattern

Load Case Number $LC_j := data_{j,2}$

Applied Bending Moment at Bolts $M_j := 0 \cdot in \cdot lbf$

Format of Output File

The stack commands below are used to stack the element identifications (ID) and load cases (LC) in asending order per bolt. The element ID number is located in the first column and the LC numbers in the second column. For each element identification, 66001, 66002, 66003, and 66004, the bolt number within the bolt pattern is added to the end of each element identification. For example, the element identification number 66001 will have bolt numbers 1 thru 8 attached to the end for all 64 load cases. This brings the total number of load cases to 2048 (4 joints x 8 bolts x 64 load cases = 2048). See the array example to the right.

$$ID := stack(ID, ID+1, ID+2, ID+3, ID+4, ID+5, ID+6, ID+7)$$

$$LC := stack(LC, LC, LC, LC, LC, LC, LC, LC)$$

$$\begin{array}{cc} ID & LC \\ \end{array}$$
$$\begin{bmatrix} 660011 & 2001 \\ 660011 & 2002 \\ \ldots & \ldots \\ 660011 & 2064 \\ 660012 & 2001 \\ 660012 & 2002 \\ \ldots & \ldots \\ 660012 & 2064 \\ \ldots & \ldots \\ \ldots & \ldots \\ 660018 & 2001 \\ 660018 & 2002 \\ \ldots & \ldots \\ 660018 & 2064 \end{bmatrix}$$

Array Example

Moment Distribution

$$M_{tot}^{\langle j \rangle} := \begin{pmatrix} Mx_j \\ My_j \\ Mz_j \end{pmatrix} + r_{load} \times \begin{pmatrix} Fx_j \\ Fy_j \\ Fz_j \end{pmatrix}$$

Use the cross-product to determine the additional moments acting on the fasteners.

$Mx_boltcg_j := M_{tot_{1,j}}$ $\quad$ $My_boltcg_j := M_{tot_{2,j}}$ $\quad$ $Mz_boltcg_j := M_{tot_{3,j}}$

Tension on bolts

$$Ftdirect_{i,j} := \begin{cases} 0 \cdot lbf & \text{if } Fx_j \le 0lbf \\ \dfrac{Fx_j}{num_bolts} & \text{otherwise} \end{cases}$$

Direct tensile load calculation - (The if statement checks for compression)

$$Fmz_{i,j} := \begin{cases} 0 \cdot lbf & \text{if } (y_i - ycg) = 0 \cdot in \\ \dfrac{\left[Mz_boltcg_j \cdot (y_i - ycg)\right] At_i}{\sum_i \left[(y_i - ycg)^2 \cdot At_i\right]} & \end{cases}$$

$$Fmy_{i,j} := \begin{cases} 0 \cdot lbf & \text{if } (z_i - zcg) = 0 \cdot in \\ \dfrac{My_boltcg_j \cdot (z_i - zcg) \cdot At_i}{\sum_i \left[\left(\left|z_i - zcg\right|\right)^2 \cdot At_i\right]} & \end{cases}$$

$$Ft_{i,j} := Ftdirect_{i,j} + Fmz_{i,j} + Fmy_{i,j}$$

Total Tensile load

Shear on bolts

Secondary shear on bolts $\quad Fs_{i,j} := \dfrac{Mx_boltcg_j \cdot r_i \cdot As_i}{\sum_i \left[(r_i)^2 \cdot (As_i)\right]}$

Total shear load $\quad Fstot_{i,j} := Fs_{i,j}$

(Note: The direct shear is taken by the shear pin.)

The stack commands below are used to stack applied axial load (P), applied shear load (V), and applied moment (M) in asending order per bolt. These loads are put into an array with the element/bolt number and load case number from above. See the "Output" file below.

$$P := \text{stack}\left[\left(Ft^T\right)^{\langle 1\rangle}, \left(Ft^T\right)^{\langle 2\rangle}, \left(Ft^T\right)^{\langle 3\rangle}, \left(Ft^T\right)^{\langle 4\rangle}, \left(Ft^T\right)^{\langle 5\rangle}, \left(Ft^T\right)^{\langle 6\rangle}, \left(Ft^T\right)^{\langle 7\rangle}, \left(Ft^T\right)^{\langle 8\rangle}\right]$$

$$V := \text{stack}\left[\left(Fstot^T\right)^{\langle 1\rangle}, \left(Fstot^T\right)^{\langle 2\rangle}, \left(Fstot^T\right)^{\langle 3\rangle}, \left(Fstot^T\right)^{\langle 4\rangle}, \left(Fstot^T\right)^{\langle 5\rangle}, \left(Fstot^T\right)^{\langle 6\rangle}, \left(Fstot^T\right)^{\langle 7\rangle}, \left(Fstot^T\right)^{\langle 8\rangle}\right]$$

$$M := \text{stack}(M, M, M, M, M, M, M, M)$$

The "Output" file below outputs an array from left to right starting with the element identification (ID), Load case number (LC), applied load on the bolt (P), applied shear on the bolt (V), and applied moment on the bolt (M). See the output array example below. The array is then written to a text file.

$$\text{Output} := \text{augment}\left(ID, LC, \frac{P}{lbf}, \frac{V}{lbf}, \frac{M}{in \cdot lbf}\right)$$

(Note: Since the ID and LC numbers are dimensionless, the P, V, and M values are divided by their units in order to make the array dimensionless.)

$$\begin{array}{ccccc} ID & LC & P & V & M \end{array}$$
$$\begin{bmatrix} 660011 & 2001 & -1068.05 & -358.78 & 0 \\ 660011 & 2002 & -1110.33 & -465.51 & 0 \\ \ldots & \ldots & \ldots & \ldots & \ldots \\ 660011 & 2064 & -699.99 & -439.08 & 0 \\ 660012 & 2001 & -813.60 & -263.63 & 0 \\ 660012 & 2002 & -977.16 & -342.06 & 0 \\ \ldots & \ldots & \ldots & \ldots & \ldots \\ 660012 & 2064 & -658.71 & -322.63 & 0 \\ \ldots & \ldots & \ldots & \ldots & \ldots \\ \ldots & \ldots & \ldots & \ldots & \ldots \\ 660018 & 2001 & 1470.8 & -358.78 & 0 \\ 660018 & 2002 & 1166.08 & -465.51 & 0 \\ \ldots & \ldots & \ldots & \ldots & \ldots \\ 660018 & 2064 & 699.99 & -439.07 & 0 \end{bmatrix}$$

Example of Output Array

Size of the "Output" Array: $\text{rows}(\text{Output}) = 2048$

(8 bolts x 64 load cases) x 4 joints = 2048 load cases

(Note: The output array to the left is an example of the array format. The loads in this example are for format purposes only and should NOT be used in this analysis.)

WRITEPRN("output_forces_upperussipf_r2_abortland.txt") := Output

Prepared By	Name	Date	Engineering and Science Contract Group	File Name
	Brent Dyer	08/05/05		UI_USS_r3.mcd
Checked By	John Krejci		*Structural Analysis Section*	Drawing No. SDG39135724
Title	Bolts from Upper Vacuum Case Interface Plate to USS			

CHECK BOLTS (bolts SDG39135892-805, NAS1958C15 0.500-20UNJF-3A, Material-A-286, Insert MS51831CA-206, Washer NAS1149E0863R)

The array from the text file above is read:

$data := READPRN("output_forces_upperussipf_r2_abortland.txt")$

$s := 1 .. rows(data)$

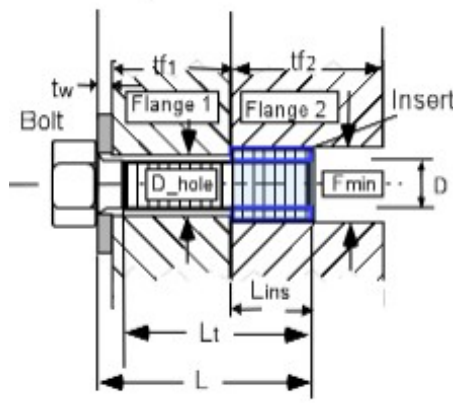

Flange 1: USS-02 Upper Vacuum Case Joint
Part number: SDG39135727
Material: 7050-T7451

Flange 2: Upper Vacuum Case Interface Plate
Part number: SDG39135788
Material: 7050-T7451

Loads from Abort Landing Load Cases

Applied tensile load $P_s := data_{s,3} \cdot lbf$

Applied shear load $V_s := data_{s,4} \cdot lbf$

Applied bending moment $M_s := data_{s,5} \cdot in \cdot lbf$

Element Identification $ID_s := data_{s,1}$

Load Case Number $LC_s := data_{s,2}$

Factors of Safety

Ultimate $SFu := 1.4$

Yield $SFy := 1.1$

Joint Separation $SFsep := 1.2$

Fitting factor $FF := 1.15$

Temperature Data (Ref Appendix C2), Abort Landing Case

Assembly $Temp_initial := 70 \cdot deg$

Maximum $Temp_max := 150 \cdot deg$

Minimum $Temp_min := 40 \cdot deg$

Bolt and Insert Data

Nominal diameter of bolt $D := 0.500 \cdot in$

Total length of bolt $L := 1.923 \cdot in$

Threaded length $Lt := 0.735 \cdot in$

(If bolt is fully threaded, input Lt = L)

Number of threads/inch $Nt := 20 \cdot \frac{1}{in}$

Length of insert $Lins := 0.688 \cdot in$

Min. external diameter of insert $Fmin := 0.615 \cdot in$

Depth of recess for insert $lr := 0.02 \cdot in$

This file uses the calculations shown in \\escfil02\2i11_mathcad\8307_bolts\thread_data.mcd

Thread Data File

Washer Data

Thickness of washer $tw := 0.063 \cdot in$

Outer Diameter of washer $Dw := .875in$

Inner Diameter of washer $Dwi := 0.515 \cdot in$

Bolt head dia. across flats $dw := 0.710 \cdot in$
(used only if there is no washer)

Flange data

Thickness of flange 1 $tf1 := .854 \cdot in$
(Ref. SDG39135727)

Thickness of flange 2 $tf2 := .688in$ (insert length)

Diameter of hole $D_hole := 0.571 \cdot in$
(Ref. SDG39135727)

Material Property Data

Bolt

Temperature correction factor for bolt strength ultimate $TSu_bolt := .96$ yield $TSy_bolt := .96$
(Ref. MIL-HDBK-5J, fig. 6.2.1.1.1)

Bolt ultimate tensile allowable stress $Ftu_bolt := 180000 \cdot psi$ (Ref. NAS1958)

Bolt ultimate shear allowable stress $Fsu_bolt := 0.6 \cdot Ftu_bolt$

Bolt yield tensile allowable $Fty_bolt := 132353 \cdot psi$ (Ref. Appendix C10)

Temperature correction factor for bolt modulus $TE_bolt := .98$ (Ref. MIL-HDBK-5J, fig. 6.2.1.1.4(a))

Modulus of elasticity of bolt $E_bolt := \left(29.1 \cdot 10^{6} \cdot psi\right)$ (Ref. MIL-HDBK-5J, table 6.2.1.0(b))

Thermal coeffecient for bolt: $\alpha_bolt_hot := 9.1 \cdot 10^{-6} \cdot \frac{\frac{in}{in}}{deg}$ $\alpha_bolt_cold := 8.9 \cdot 10^{-6} \cdot \frac{\frac{in}{in}}{deg}$
(Ref. MIL-HDBK-5J, fig. 6.2.1.0)

Insert

Temperature correction factor for insert strength $TS_ins := .96$ (Ref. MIL-HDBK-5J, fig. 6.2.1.1.1)

Ultimate tensile allowable stress $Ftu_ins := 140000 \cdot psi$ (Ref. MS51831)

Ultimate shear allowable stress $Fsu_ins := 0.6 \cdot Ftu_ins$

Washer

Temperature correction factor for washer modulus $TE_washer := .96$ (Ref. MIL-HDBK-5J, fig. 6.2.1.1.1)

Modulus of elasticity of washer $E_washer := \left(29.1 \cdot 10^{6} \cdot psi\right)$ (Ref. MIL-HDBK-5J, table 6.2.1.0(b))

Prepared By	Name	Date		File Name
	Brent Dyer	08/05/05		UI_USS_r3.mcd
Checked By	John Krejci		**Engineering and Science Contract Group** *Structural Analysis Section*	Drawing No. SDG39135724
Title	Bolts from Upper Vacuum Case Interface Plate to USS			

Flanges

Stiffness of the joint depends upon number of members in the grip of the fasteners,
Modulus of elasticity of these members, and diameters of the bolt and the washer.

Temperature correction factor for flange 1 $Tf1E := .96$ (modulus) (Ref. MIL-HDBK-5J, fig. 3.7.6.1.4 and Appendix C9)

Temperature correction factor for flange 2 $Tf2E := .96$ (modulus)

$Tf2s := .96$ (strength) (Ref. MIL-HDBK-5J, fig. 3.7.4.2.1)

Shear Strength Allowable for flanges $Fsu_f2 := 44000 \cdot psi$ (Ref. MIL-HDBK-5J, table 3.7.4.0(b1))

Modulus of elasticity for the parts in the joint (Ref. MIL-HDBK-5J, table 3.7.4.0(b1))

$E_flange1 := \left(10.3 \cdot 10^{6} \cdot psi\right)$ $E_flange2 := \left(10.3 \cdot 10^{6} \cdot psi\right)$

Coefficient of thermal expansion for flanges (Ref. MIL-HDBK-5J, table 3.7.4.0(b1) and Appendix C9)

$\alpha_flange1_hot := 12.8 \cdot 10^{-6} \cdot \frac{\frac{in}{in}}{deg}$ $\alpha_flange2_hot := 12.8 \cdot 10^{-6} \cdot \frac{\frac{in}{in}}{deg}$

$\alpha_flange1_cold := 12.1 \cdot 10^{-6} \cdot \frac{\frac{in}{in}}{deg}$ $\alpha_flange2_cold := 12.1 \cdot 10^{-6} \cdot \frac{\frac{in}{in}}{deg}$

Torque/Preload data per SDG39135724

Maximum torque (65% of yield) $Tmax := 1032 \cdot in \cdot lbf$

Minimum torque (95% of max. torque) $Tmin := 980 \cdot in \cdot lbf$

Torque coefficient (Lubricated): $k := 0.15$

Loading plane factor: $n := .5$

Preload Uncertainty: $\Gamma := 0.25$

This file uses the calculations shown in \\escfil02\2i11_mathcad\8307_bolts\multi_bolt_stiffness_insert_RevC

Insert Stiffness File

Prepared By	Name	Date		File Name
	Brent Dyer	08/05/05		UI_USS_r3.mcd
Checked By	John Krejci		**Engineering and Science Contract Group** *Structural Analysis Section*	Drawing No. SDG39135724
Title	Bolts from Upper Vacuum Case Interface Plate to USS			

Bolt Load data

Bolt/joint stiffness factor	$\phi = 0.409$	Preload due to temperature	$Pthr_pos = 1173.5\ lbf$
Max. preload	$PLDmax = 18373.5\ lbf$		$Pthr_neg = -380.6\ lbf$
Min. preload	$PLDmin = 8559.4\ lbf$	Uncertainty factor	$\Gamma = 0.25$
Joint separation load	$max(Psep) = 4423.356\ lbf$	Torque coefficient	$k = 0.15$
Max. load on the bolt(ultimate)	$max(Pb) = 19586.6\ lbf$	Loading plane factor	$n = 0.5$
Max. load on the bolt(yield)	$max(Pby) = 19326.7\ lbf$	Thread shear pullout load of bolt or insert	$Pths = 58388.7\ lbf$
Bolt ultimate tensile strength	$PAt = 27143.2\ lbf$	Thread shear pullout load in parent metal	$Ppths = 28074.2\ lbf$

Length_check = "Bolt length is sufficient"

Summary of Margins for bolt:

Joint separation	$MS_min_{1,1} = 1.115$	Direct Thread shear Ultimate	$MS_min_{6,1} = 3.731$
Direct Tension Ultimate	$MS_min_{2,1} = 3.574$	Total Thread shear Ultimate	$MS_min_{7,1} = 0.433$
Direct Tension Yield	$MS_min_{3,1} = 3.280$	Shear Ultimate	$MS_min_{8,1} = 6.21$
Total Tension Ultimate	$MS_min_{4,1} = 0.386$	Bending Ultimate	$MS_min_{9,1} = 10$
Total Tension Yield	$MS_min_{5,1} = 0.033$	Combined shear, tension and bending ultimate	$MS_min_{10,1} = 0.383$

Determination of the smallest margin of safety for the bolt, and the failure mode:

$MSbolt := min(MS)$

$MSbolt = 0.033$ Failure_Mode = "Total Tension Yield"

$MS_min_ID = 660031$	Element Identification (66003) and Bolt Number (1) for Minimum Margin
$MS_min_LC = 2035$	Load Case Number for Minimum Margin
$MS_min_P = 3686.1$	Applied Tensile Load for Minimum Margin
$MS_min_V = -1111.8$	Applied Shear Load for Minimum Margin
$MS_min_M = 0$	Applied Bending Moment for Minimum Margin

Fail-Safe Analysis for Upper Vacuum Case Interface Plate to USS-02 (Shear Pin Failure)

This portion of the analysis assumes a failure in the shear pin. The shear pin part number is SDG39135755-005. All 8 NAS1958 fasteners will take the direct shear load.

Direct shear Loads $Fsd_{i,j} := \dfrac{\sqrt{(Fy_j)^2 + (Fz_j)^2}}{num_bolts}$

Total shear load $Fstot_{i,j} := Fs_{i,j} + Fsd_{i,j}$

(Note: The Fs variable is the secondary shear and calculated above.)

The stack command below is used to stack the applied shear load (V) in asending order per bolt. The applied axial load (P) and applied moment (M) are stacked above and reused in the output file below. These loads are put into an array with the element/bolt number and load case number from above.

$$V := stack\left[(Fstot^T)^{\langle 1\rangle}, (Fstot^T)^{\langle 2\rangle}, (Fstot^T)^{\langle 3\rangle}, (Fstot^T)^{\langle 4\rangle}, (Fstot^T)^{\langle 5\rangle}, (Fstot^T)^{\langle 6\rangle}, (Fstot^T)^{\langle 7\rangle}, (Fstot^T)^{\langle 8\rangle}\right]$$

The "Output" file below outputs an array from left to right starting with the element identification (ID), Load case number (LC), applied load on the bolt (P), applied shear on the bolt (V), and applied moment on the bolt (M). The array is written to a text file. For the format of the array see the output example array above.

$$Output := augment\left(ID, LC, \frac{P}{lbf}, \frac{V}{lbf}, \frac{M}{in \cdot lbf}\right)$$

(Note: Since the ID and LC numbers are dimensionless, the P, V, and M values are divided by their units in order to make the array dimensionless.)

Size of the "Output" Array: $rows(Output) = 2048$

(8 bolts x 64 load cases) x 4 joints = 2048 load cases

WRITEPRN("output_forces_upperussipf_r2_abortland_pinfs.txt") := Output

Fail-safe Analysis (Shear Pin Failure)

The array from the text file above is read:

data_fsp := READPRN("output_forces_upperussipf_r2_abortland_pinfs.txt")

$s := 1 .. rows(data_fsp)$

Fail-safe Loads, abort landing

Applied tensile load $P_FS_s := data_fsp_{s,3} \cdot lbf$ $ID_FS_s := data_fsp_{s,1}$

Applied shear load $V_FS_s := data_fsp_{s,4} \cdot lbf$ $LC_FS_s := data_fsp_{s,2}$

Applied bending moment $M_FS_s := data_fsp_{s,5} \cdot in \cdot lbf$

Fail-safe Factors of Safety

Ultimate $SFu_FS := 1.0$

Joint Separation $SFsep_FS := 1.0$

This file uses the calculations shown in \\escfil02\2i11_mathcad\8307_bolts\ multi_bolt_stiffness_insert_FS_RevC

Fail Safe Stiffness File

Bolt Fail-safe Load data

Joint separation load $\max(Psep_FS) = 3686.13\ lbf$

Max. load on the bolt(ultimate) $\max(Pb_FS) = 19240\ lbf$

$\max(P_FS) = 3686.13\ lbf$

$\max(V_FS) = 2091.24\ lbf$

Summary of fail-safe Margins for bolt:

Joint separation	$MS_minFS_{1,1} = 1.538$	Total Thread shear Ultimate	$MS_minFS_{5,1} = 0.459$
Direct Tension Ultimate	$MS_minFS_{2,1} = 5.403$	Shear Ultimate	$MS_minFS_{6,1} = 5.41$
Total Tension Ultimate	$MS_minFS_{3,1} = 0.411$	Bending Ultimate	$MS_minFS_{7,1} = 10$
Direct Thread shear Ultimate	$MS_minFS_{4,1} = 5.62$	Combined shear, tension and bending ultimate	$MS_minFS_{8,1} = 0.4108$

Determination of the smallest fail-safe margin of safety for the bolt, and the failure mode:

$MSbolt_FS := \min(MS_FS)$

$MSbolt_FS = 0.411$ $Failure_Mode_FS = \text{"Combined Shear Tension Bending Ultimate"}$

$MS_min_ID = 660031$ Element Identification (66003) and Bolt Number (1) for Minimum Margin

$MS_min_LC = 2035$ Load Case Number for Minimum Margin

$MS_min_P = 3686.1$ Applied Tensile Load for Minimum Margin

$MS_min_V = 63.8$ Applied Shear Load for Minimum Margin

$MS_min_M = 0$ Applied Bending Moment for Minimum Margin

Bolt Fail-Safe Analysis for Upper Vacuum Case Interface Plate to USS-02

Since bolt number 1 has the lowest margin of safety it is assumed that this bolt will be the first bolt to fail. There are now 7, NAS1958C 0.50-20 UNFJ fasteners, holding the USS to the upper vacuum case interface plate. The drawing number for the USS-02 Assembly to Vaccuum Case Assembly is SDG39135724.

size thread/in

$$bolt2 := \begin{pmatrix} 0.50 & 20 \\ 0.50 & 20 \\ 0.50 & 20 \\ 0.50 & 20 \\ 0.50 & 20 \\ 0.50 & 20 \\ 0.50 & 20 \end{pmatrix}$$

$$s := 1 .. rows(bolt2)$$

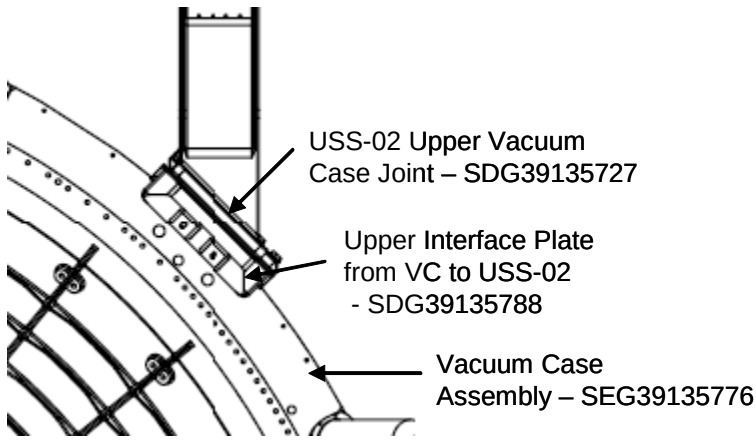

Top View of Vacuum Case and USS-02 Assembly

$N2_s := bolt2_{s,2} \cdot \frac{1}{in}$ pitch of bolt

$D2_s := bolt2_{s,1} \cdot in$ bolt diameter

$At2_s := \pi \cdot \left(\frac{D2_s - 0.9743 \cdot \frac{1}{N2_s}}{2} \right)^2$ Tensile Area of bolt

$As2_s := \pi \cdot \left(\frac{D2_s - 1.299038 \cdot \frac{1}{N2_s}}{2} \right)^2$ Shear Area of bolt

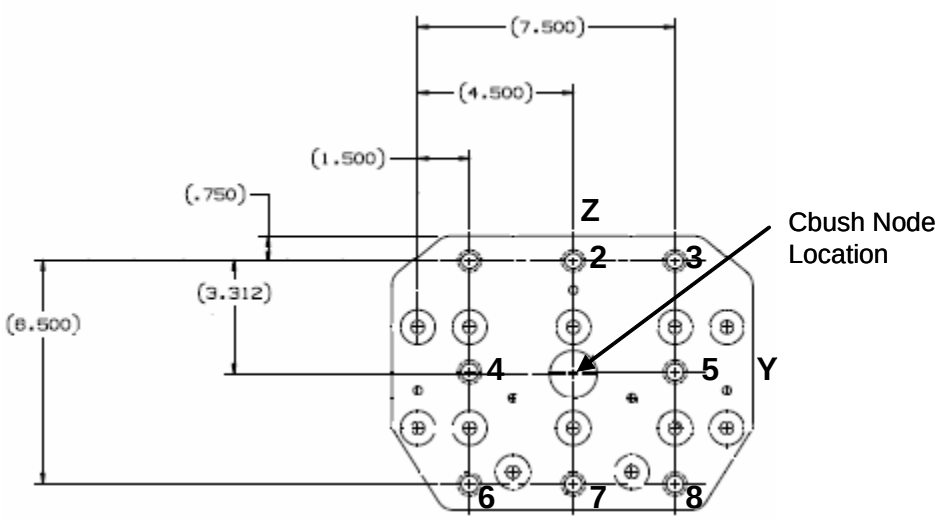

Upper Vacuum Case Interface Plate to USS Bolt Pattern for Fail-Safe Analysis

Bolt no.	x co-ord	y co-ord	z co-ord
2	0.0	0.0	3.312
3	0.0	3.0	3.312
4	0.0	–3.0	0.062
5	0.0	3.0	0.062
6	0.0	–3.0	–3.188
7	0.0	0.0	–3.188
8	0.0	3.0	–3.188

$$x2 := \begin{pmatrix} 0.0 \\ 0.0 \\ 0.0 \\ 0.0 \\ 0.0 \\ 0.0 \\ 0.0 \end{pmatrix} \cdot in \qquad y2 := \begin{pmatrix} 0.0 \\ 3.0 \\ -3.0 \\ 3.0 \\ -3.0 \\ 0.0 \\ 3.0 \end{pmatrix} \cdot in \qquad z2 := \begin{pmatrix} 3.312 \\ 3.312 \\ 0.062 \\ 0.062 \\ -3.188 \\ -3.188 \\ -3.188 \end{pmatrix} \cdot in$$

Location of applied forces and moments

$xforce2 := 0.0in \qquad yforce2 := 0.0in \qquad zforce2 := 0.0in$

$$cgload2 := \begin{pmatrix} xforce2 \\ yforce2 \\ zforce2 \end{pmatrix} \qquad cgload2 = \begin{pmatrix} 0 \\ 0 \\ 0 \end{pmatrix} in$$

Center of gravity of bolt group

$$xcg2 := \frac{\sum_s x2_s}{rows(x2)} \qquad xcg = 0\,in \qquad ycg2 := \frac{\sum_s y2_s}{rows(y2)} \qquad ycg2 = 0.429\,in \qquad zcg2 := \frac{\sum_s z2_s}{rows(z2)} \qquad zcg2 = -0.402\,in$$

$$cg_{bolt2} := \begin{pmatrix} xcg2 \\ ycg2 \\ zcg2 \end{pmatrix} \qquad cg_{bolt2} = \begin{pmatrix} 0 \\ 0.429 \\ -0.402 \end{pmatrix} in$$

Note: Since the x direction is into the plate the loads are shared equally between the bolts. However, due to a failure in bolt 1, the y and z directions in the bolt pattern are unsymmetric and have offsets from the center of gravity.

Load Vector

$$r_{load2} := cgload2 - cg_{bolt2} \qquad r_{load2} = \begin{pmatrix} 0 \\ -0.429 \\ 0.402 \end{pmatrix} in$$

Distance from CG of Bolts to Individual Bolts for shear calculations

$$r2_s := \sqrt{\left(z2_s - zcg2\right)^2 + \left(y2_s - ycg2\right)^2} \qquad r2 = \begin{pmatrix} 3.739 \\ 4.518 \\ 3.460 \\ 2.613 \\ 4.418 \\ 2.818 \\ 3.791 \end{pmatrix} in$$

Reading database file for bolted joint, abort landing case

$data := READPRN("upperussipf_r2_abortland.txt")$

$q := 1 .. rows(data) \qquad num_bolts2 := rows(bolt2)$

Loads from 2-04 loads model, abort landing case

Axial Load $\quad Fx2_q := data_{q,3} \cdot lbf$

Shear in Y axis $\quad Fy2_q := data_{q,4} \cdot lbf$

Shear in Z axis $\quad Fz2_q := data_{q,5} \cdot lbf$

Element Identification $\quad ID2_q := data_{q,1}$

Load Case Number $\quad LC2_q := data_{q,2}$

Torsion $\quad Mx2_q := data_{q,6} \cdot in \cdot lbf$

Moment about Y axis $\quad My2_q := data_{q,7} \cdot in \cdot lbf$

Moment about Z axis $\quad Mz2_q := data_{q,8} \cdot in \cdot lbf$

$ID2_q := ID2_q \cdot 10 + 1$ Counter for number of bolts in pattern

Applied Bending Moment at Bolts $\quad M2_q := 0 \cdot in \cdot lbf$

Format of Output File

The stack command below is used to stack the element identifications (ID2) and load cases (LC2) in asending order per bolt.See the array example above for explanation. Note: bolt number 1 is not included.

$ID2 := stack(ID2 + 1, ID2 + 2, ID2 + 3, ID2 + 4, ID2 + 5, ID2 + 6, ID2 + 7)$

$LC2 := stack(LC2, LC2, LC2, LC2, LC2, LC2, LC2)$

Moment Distribution

$$M_{tot2}^{\langle q \rangle} := \begin{pmatrix} Mx2_q \\ My2_q \\ Mz2_q \end{pmatrix} + r_{load} \times \begin{pmatrix} Fx2_q \\ Fy2_q \\ Fz2_q \end{pmatrix}$$

Use the cross-product to determine the additional moments acting on the fasteners.

$Mx_boltcg2_q := M_{tot2_{1,q}}$ $\quad$ $My_boltcg2_q := M_{tot2_{2,q}}$ $\quad$ $Mz_boltcg2_q := M_{tot2_{3,q}}$

Tension on bolts

$$Ftdirect2_{s,q} := \begin{cases} 0 \cdot lbf & \text{if } Fx2_q \le 0lbf \\ \dfrac{Fx2_q}{num_bolts2} & \text{otherwise} \end{cases}$$

Direct tensile load calculation

$$Fmz2_{s,q} := \begin{cases} 0 \cdot lbf & \text{if } \left(y2_s - ycg2\right) = 0 \cdot in \\ \dfrac{\left[Mz_boltcg2_q \cdot \left(y2_s - ycg2\right)\right] At2_s}{\sum_s \left[\left(y2_s - ycg2\right)^2 \cdot At2_s\right]} & \end{cases}$$

$$Fmy2_{s,q} := \begin{cases} 0 \cdot lbf & \text{if } \left(z2_s - zcg2\right) = 0 \cdot in \\ \dfrac{My_boltcg2_q \cdot \left(z2_s - zcg2\right) \cdot At2_s}{\sum_s \left[\left(\left|z2_s - zcg2\right|\right)^2 \cdot At2_s\right]} & \end{cases}$$

$Ft2_{s,q} := Ftdirect2_{s,q} + Fmz2_{s,q} + Fmy2_{s,q}$ Total Tensile load

Shear on bolts

Secondary shear on bolts $\quad$ $$Fs2_{s,q} := \frac{Mx_boltcg2_q \cdot r2_s \cdot As2_s}{\sum_s \left[\left(r2_s\right)^2 \cdot \left(As2_s\right)\right]}$$

Total shear load $\quad$ $Fstot2_{s,q} := Fs2_{s,q}$

(Note: The direct shear is taken by the shear pin.)

The stack commands below are used to stack apllied axial load (P2), applied shear load (V2), and applied moment (M2) in asending order per bolt. These loads are put into an array with the element/bolt number and load case number from above. See the "Output" file below. Notice how there is only 7 bolts, since bolt number 1 is not included.

$$P2 := \text{stack}\left[\left(Ft2^T\right)^{\langle 1\rangle}, \left(Ft2^T\right)^{\langle 2\rangle}, \left(Ft2^T\right)^{\langle 3\rangle}, \left(Ft2^T\right)^{\langle 4\rangle}, \left(Ft2^T\right)^{\langle 5\rangle}, \left(Ft2^T\right)^{\langle 6\rangle}, \left(Ft2^T\right)^{\langle 7\rangle}\right]$$

$$V2 := \text{stack}\left[\left(Fstot2^T\right)^{\langle 1\rangle}, \left(Fstot2^T\right)^{\langle 2\rangle}, \left(Fstot2^T\right)^{\langle 3\rangle}, \left(Fstot2^T\right)^{\langle 4\rangle}, \left(Fstot2^T\right)^{\langle 5\rangle}, \left(Fstot2^T\right)^{\langle 6\rangle}, \left(Fstot2^T\right)^{\langle 7\rangle}\right]$$

$$M2 := \text{stack}(M2, M2, M2, M2, M2, M2, M2)$$

The "Output2" file below outputs an array from left to right starting with the element identification (ID2), Load case number (LC2), applied load on the bolt (P2), applied shear on the bolt (V2), and applied moment on the bolt (M2). See the output array example above. The array is written to a text file.

$$Output2 := \text{augment}\left(ID2, LC2, \frac{P2}{lbf}, \frac{V2}{lbf}, \frac{M2}{in \cdot lbf}\right)$$

(Note: Since the ID2 and LC2 numbers are dimensionless, the P2, V2, and M2 values are divided by their units in order to make the array dimensionless.)

Size of the "Output2" Array: $\text{rows}(Output2) = 1792$

(7 bolts x 64 load cases) x 4 joints = 1792 load cases

$$\text{WRITEPRN}(\text{"output_forces_upperussipf_r2_abortland_fs.txt"}) := Output2$$

Bolt Fail-safe Results

The array from the text file above is read:

$$data_fs := \text{READPRN}(\text{"output_forces_upperussipf_r2_abortland_fs.txt"})$$

$$s := 1 .. \text{rows}(data_fs)$$

Prepared By	Name	Date		File Name
	Brent Dyer	08/05/05		UI_USS_r3.mcd
Checked By	John Krejci		**Engineering and Science Contract Group** *Structural Analysis Section*	Drawing No. SDG39135724
Title	Bolts from Upper Vacuum Case Interface Plate to USS			

Fail-safe Loads, abort landing

Applied tensile load $P_FS_s := data_fs_{s,3} \cdot lbf$ $ID_FS_s := data_fs_{s,1}$

Applied shear load $V_FS_s := data_fs_{s,4} \cdot lbf$ $LC_FS_s := data_fs_{s,2}$

Applied bending moment $M_FS_s := data_fs_{s,5} \cdot in \cdot lbf$

Fail-safe Factors of Safety

Ultimate $SFu_FS := 1.0$

Joint Separation $SFsep_FS := 1.0$

This file uses the calculations shown in \\escfil02\2i11_mathcad\8307_bolts\ multi_bolt_stiffness_insert_FS_RevC

Fail-Safe Stiffness File

Bolt Fail-safe Load data

Joint separation load $\max(Psep_FS) = 4037.07\ lbf$ $\max(P_FS) = 4037.07\ lbf$

Max. load on the bolt(ultimate) $\max(Pb_FS) = 19322.5\ lbf$ $\max(V_FS) = 1900.79\ lbf$

Summary of fail-safe Margins for bolt:

Joint separation	$MS_minFS_{1,1} = 1.317$	Total Thread shear Ultimate	$MS_minFS_{5,1} = 0.453$
Direct Tension Ultimate	$MS_minFS_{2,1} = 4.847$	Shear Ultimate	$MS_minFS_{6,1} = 6.05$
Total Tension Ultimate	$MS_minFS_{3,1} = 0.405$	Bending Ultimate	$MS_minFS_{7,1} = 10$
Direct Thread shear Ultimate	$MS_minFS_{4,1} = 5.05$	Combined shear, tension and bending ultimate	$MS_minFS_{8,1} = 0.4043$

Determination of the smallest fail-safe margin of safety for the bolt, and the failure mode:

$MSbolt_FS := \min(MS_FS)$

$MSbolt_FS = 0.404$ $Failure_Mode_FS = \text{"Combined Shear Tension Bending Ultimate"}$

$MS_min_ID = 660022$ Element Identification (66002) and Bolt Number (2) for Minimum Margin

$MS_min_LC = 2038$ Load Case Number for Minimum Margin

$MS_min_P = 4037.1$ Applied Tensile Load for Minimum Margin

$MS_min_V = -810.9$ Applied Shear Load for Minimum Margin

$MS_min_M = 0$ Applied Bending Moment for Minimum Margin

Prepared By	Name	Date		File Name
	Brent Dyer	08/05/05		UI_USS_r3.mcd
Checked By	John Krejci		**Engineering and Science Contract Group** *Structural Analysis Section*	Drawing No. SDG39135724
Title	Bolts from Upper Vacuum Case Interface Plate to USS			

Shear Pin Analysis for Upper Vacuum Case Interface Plate to USS-02

The USS-02 assembly consists of four Upper Vacuum Case Joints (SDG39135727). Each Upper Vacuum Case Joint has a shear pin (SDG39135755-005) installed with two bushings. The shear pin sets inside of a inner bushing SDG39135757-001 and the inner bushing sets inside of the outer bushing SDG39135757-003.

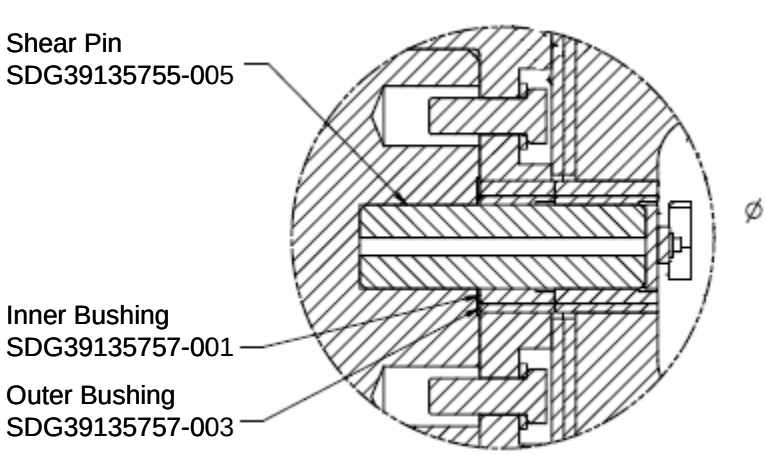

Cross Section of the Bolted Interface

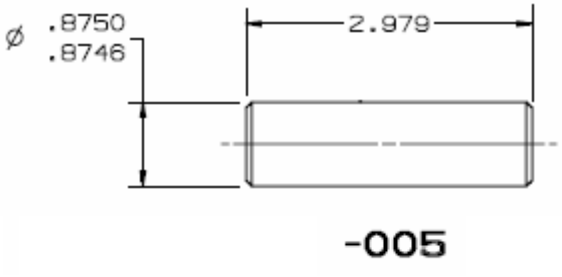

Shear Pin SDG39135755-005

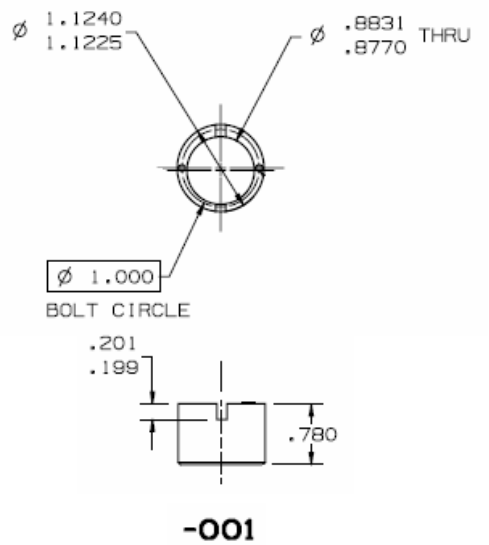

Inner Bushing SDG39135757-001

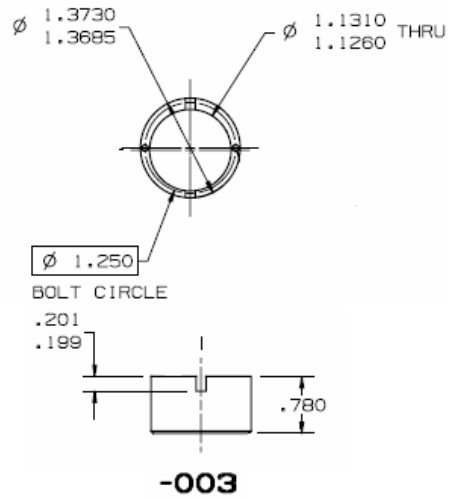

Outer Bushing SDG39135757-003

Geometry

Minimum Diameter of shear pin $dp := 0.8746 \cdot in$ (Ref. Drg. SDG39135755-005)

Outer diameter of outer bushing $do := 1.3685 \cdot in$ (Ref. Drg. SDG39135757-003)

Thickness of interface plate $tp := 0.75 \cdot in$ (Ref. Drg. SDG39135788)

Length of inner bushing $tpin := 0.78 \cdot in$ (Ref. Drg. SDG39135757-001)

Temperature Data

Shear Pin (Custom 455, H1000 bar, AMS5617):

Temperature correction factor for shear $csp := 0.96$ (Ref. MIL-HDBK-5J, table 2.6.4.1.2)

Interface Plate (Al 7050-T7451 Plate):

Temperature correction factor for ultimate $cpu := 0.96$ (Ref. MIL-HDBK-5J, fig. 3.7.4.2.1)

Temperature correction factor for yield $cpy := 0.97$

Bushings (Aluminum Bronze AMS4640, ASTM B150, alloy C63000):

Temperature correction factor for ultimate $cbu := 0.95$ (Ref. Appendix C8)

Temperature correction factor for yield $cby := 0.99$

Material Properties

Shear Pin (Custom 455, H1000 bar, AMS5617):

Allowable shear stress $Fsu := 124000 \cdot psi$ (Ref. MIL-HDBK-5J, table 2.6.4.0(b))

Interface Plate (Al 7050-T7451 Plate):

Allowable bearing stress $Fbrup := 141000 \cdot psi$ (Ref. MIL-HDBK-5J, table 3.7.4.0 (b1), 2.5 in. thick, e/D=2.0)

$Fbryp := 104000 \cdot psi$

Bushings (Aluminum Bronze AMS4640, ASTM B150, alloy C63000):

Allowable bearing stress of bushing $Fbru := 125000 \cdot psi$ (Ref. Appendix C8, Rockwell Materials data sheet 09.12.01.01,1.0)

$Fbry := 72000 \cdot psi$

Shear Pin Analysis

Loads in shear pin from Bolt Analysis (Direct Shear)

$$Fsp_j := \sqrt{\left(Fy_j\right)^2 + \left(Fz_j\right)^2}$$

$rows(Fsp) = 256$

(4 joints x 64 load cases = 256 load cases)

Shear Area of pin

$$Ash := \frac{\pi \cdot dp^2}{4}$$

$Ash = 0.601\ in^2$

Allowable shear load

$Pall := Fsu \cdot Ash \cdot csp$

$Pall = 71515.8\ lbf$

Margin of safety

$$MSp_j := \left(\frac{Pall}{Fsp_j \cdot SFu} - 1\right)$$

$min(MSp) = 1.55$

Bearing of Outer Bushing on Interface Plate

Bearing of the outer bushing on the USS-02 Upper Vacuum Case Joint is not critical since the bearing thickness is .854 in. compared to 0.75 in on the Upper Vacuum Case Interface Plate. So the margin of safety is high for bearing on the USS-02 Upper Vacuum Case. The Upper Vacuum Case Interface Plate thickness is used below.

Bearing area

$Ab := do \cdot tp$

$Ab = 1.026\ in^2$

Allowable bearing load

$Pbru := Fbrup \cdot Ab \cdot cpu$

$Pbru = 138930.1\ lbf$

$Pbry := Fbryp \cdot Ab \cdot cpy$

$Pbry = 103540.7\ lbf$

Margin of safety

$$MSu_j := \frac{Pbru}{Fsp_j \cdot SFu} - 1$$

$$MSy_j := \frac{Pbry}{Fsp_j \cdot SFy} - 1$$

$min(MSu) = 3.95$

$min(MSy) = 3.7$

Bearing of Shear Pin on Inner Bushing

Bearing area $Abp := dp \cdot tpin$ $Abp = 0.682\ in^2$

Allowable bearing load $Pbrui := Fbru \cdot Abp \cdot cbu$ $Pbrui = 81009.8\ lbf$

$Pbryi := Fbry \cdot Abp \cdot cby$ $Pbryi = 48626.4\ lbf$

Margin of safety $MSbru_j := \frac{Pbrui}{Fsp_j \cdot SFu} - 1$ $MSbry_j := \frac{Pbryi}{Fsp_j \cdot SFy} - 1$

$\min(MSbru) = 1.89$

$\min(MSbry) = 1.21$

2.4.1.2 Lower Interface Plate to USS-02

Prepared By	Name	Date	Engineering and Science Contract Group	File Name
	Brent Dyer	09/13/05		LI_USS_r3.mcd
Checked By	John Krejci		*Structural Analysis Section*	Drawing No. SDG39135726
Title	Bolts from Lower Vacuum Case Interface to USS			

Lower Vacuum Case Interface Plate to USS-02 Bolt Analysis

The USS-02 assembly consists of four Lower Vaccum Case (VC) Joints. There are a total of 10 fasteners attaching the USS-02 to the lower interface plate. The fasteners are NAS1958C (180 ksi), 0.50-20 UNFJ. There is also one shear pin 0.875" in diameter. The drawing number for the USS-02 Assembly to Vaccuum Case Assembly is SDG39135724.

Bolt Geometry

size thread/in

$$bolt := \begin{pmatrix} 0.50 & 20 \\ 0.50 & 20 \\ 0.50 & 20 \\ 0.50 & 20 \\ 0.50 & 20 \\ 0.50 & 20 \\ 0.50 & 20 \\ 0.50 & 20 \\ 0.50 & 20 \\ 0.50 & 20 \end{pmatrix}$$

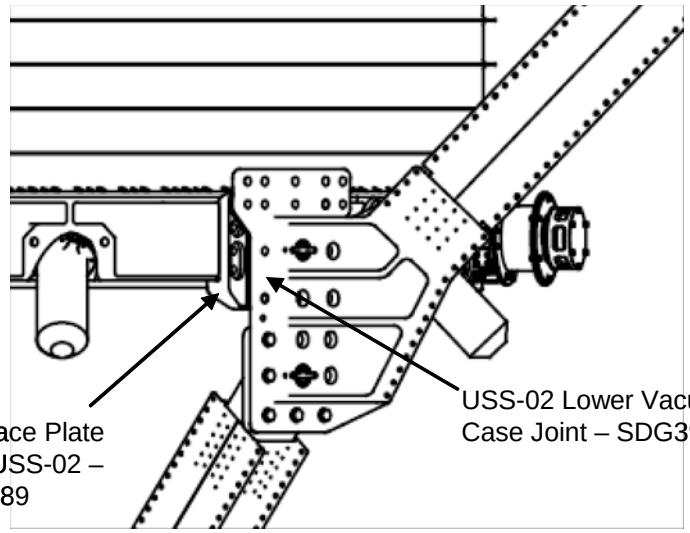

View of Vacuum Case (VC) and USS-02 Assembly

$i := 1 .. rows(bolt)$

$N_i := bolt_{i,2} \cdot \frac{1}{in}$ pitch of bolt

$D_i := bolt_{i,1} \cdot in$ bolt diameter

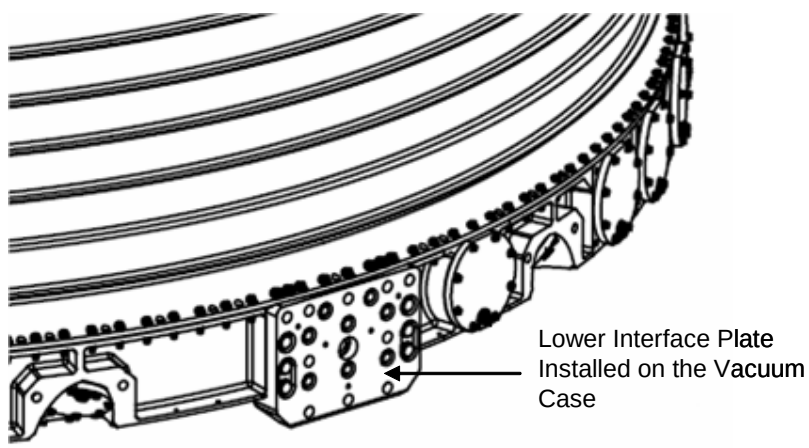

Side View of Vacuum Case Assembly

$$At_i := \pi \cdot \left(\frac{D_i - 0.9743 \cdot \frac{1}{N_i}}{2} \right)^2$$ Tensile Area of bolt

$$As_i := \pi \cdot \left(\frac{D_i - 1.299038 \cdot \frac{1}{N_i}}{2} \right)^2$$ Shear Area of bolt

Prepared By	Name	Date		File Name
	Brent Dyer	09/13/05		LI_USS_r3.mcd
Checked By	John Krejci		**Engineering and Science Contract Group** *Structural Analysis Section*	Draw ing No. SDG39135726
Title	Bolts from Lower Vacuum Case Interface to USS			

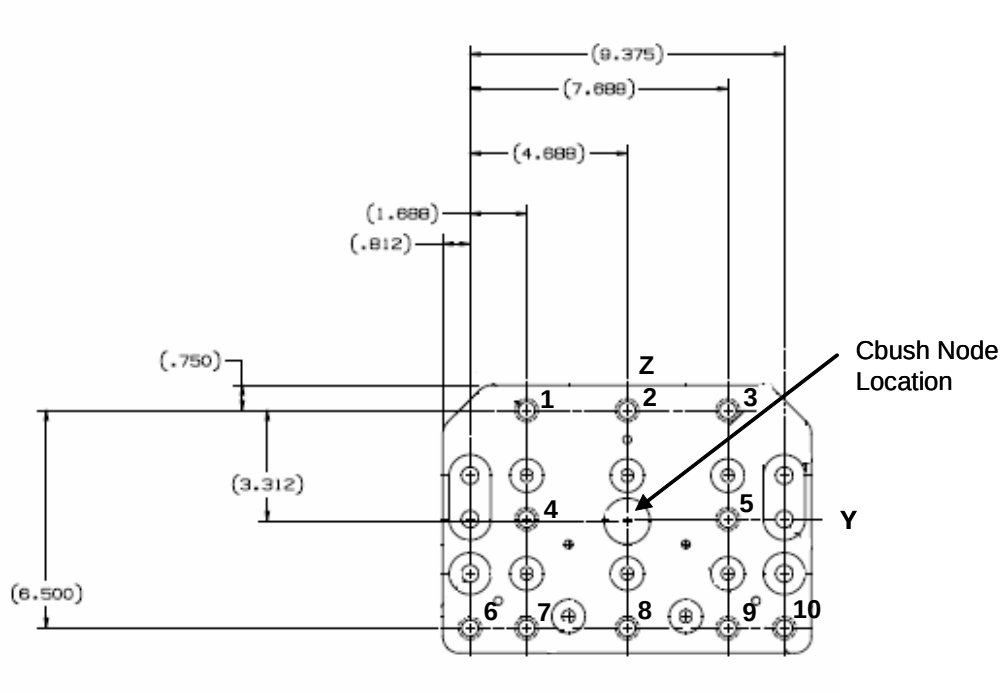

Lower Vacuum Case Interface Plate to USS-02 Bolt Pattern

Bolt no. $\begin{pmatrix} 1 \\ 2 \\ 3 \\ 4 \\ 5 \\ 6 \\ 7 \\ 8 \\ 9 \\ 10 \end{pmatrix}$

x co-ord $x := \begin{pmatrix} 0.0 \\ 0.0 \\ 0.0 \\ 0.0 \\ 0.0 \\ 0.0 \\ 0.0 \\ 0.0 \\ 0.0 \\ 0.0 \end{pmatrix} \cdot in$

y co-ord $y := \begin{pmatrix} -3.0 \\ 0.0 \\ 3.0 \\ -3.0 \\ 3.0 \\ -4.688 \\ -3.0 \\ 0.0 \\ 3.0 \\ 4.688 \end{pmatrix} \cdot in$

z co-ord $z := \begin{pmatrix} 3.3125 \\ 3.3125 \\ 3.3125 \\ 0.0625 \\ 0.0625 \\ -3.1875 \\ -3.1875 \\ -3.1875 \\ -3.1875 \\ -3.1875 \end{pmatrix} \cdot in$

<u>Location of applied forces and moments</u>

$xforce := 0.0in$ $\quad yforce := 0.0in$ $\quad zforce := 0.0in$

$cgload := \begin{pmatrix} xforce \\ yforce \\ zforce \end{pmatrix}$ $\quad cgload = \begin{pmatrix} 0 \\ 0 \\ 0 \end{pmatrix} in$

Center of gravity of bolt group

$$xcg := \frac{\sum_i x_i}{rows(x)} \qquad xcg = 0\,in \qquad ycg := \frac{\sum_i y_i}{rows(y)} \qquad ycg = 0\,in \qquad zcg := \frac{\sum_i z_i}{rows(z)} \qquad zcg = -0.587\,in$$

$$cg_{bolt} := \begin{pmatrix} xcg \\ ycg \\ zcg \end{pmatrix} \qquad cg_{bolt} = \begin{pmatrix} 0 \\ 0 \\ -0.587 \end{pmatrix} in$$

Note: Since the x direction is into the plate the loads are shared equally between the bolts. The bolt pattern is symmetric about the y-axis with a zero offset from the center of gravity. However, in the z direction the bolt pattern is unsymmetric and has a .587" offset from the center of gravity.

Load Vector

$$r_{load} := cgload - cg_{bolt} \qquad r_{load} = \begin{pmatrix} 0 \\ 0 \\ 0.587 \end{pmatrix} in$$

Distance from CG of Bolts to Individual Bolts for shear calculations

$$r_i := \sqrt{\left(z_i - zcg\right)^2 + \left(y_i - ycg\right)^2} \qquad r = \begin{pmatrix} 4.920 \\ 3.900 \\ 4.920 \\ 3.070 \\ 3.070 \\ 5.361 \\ 3.970 \\ 2.600 \\ 3.970 \\ 5.361 \end{pmatrix} in$$

Loads model 2-04 was used to retrieve loads at the four bolted interfaces. A Cbush element located at the center of each interface plate was post processed in NASPOST for forces and moments in the x, y, and z directions. The Cbush element identifications for the four bolted interfaces are 66011, 66012. 66013, and 66014. These loads are read into an array and distributed out to the 10 bolts for each interface plate.

(Note: This joint was checked for minimum margins of safety for launch, nominal landing, and abort landing load cases. The abort landing cases combined with abort landing temperature data resulted in the lowest minimimum margins of safety. Therefore, the abort landing cases are used in this analysis.)

Reading database file for bolted joint, abort landing case

data := READPRN("lowerussipf_r2_abortland.txt")

j := 1 .. rows(data)

num_bolts := rows(bolt)

Loads from 2-04 loads model, abort landing case

Axial Load $Fx_j := data_{j,3} \cdot lbf$

Shear in Y axis $Fy_j := data_{j,4} \cdot lbf$

Shear in Z axis $Fz_j := data_{j,5} \cdot lbf$

Element Identification $ID_j := data_{j,1}$

Load Case Number $LC_j := data_{j,2}$

Torsion $Mx_j := data_{j,6} \cdot in \cdot lbf$

Moment about Y axis $My_j := data_{j,7} \cdot in \cdot lbf$

Moment about Z axis $Mz_j := data_{j,8} \cdot in \cdot lbf$

$ID_j := ID_j \cdot 1000 + 1$ Counter for number of bolts in pattern

Applied Bending Moment at Bolts $M_j := 0 \cdot in \cdot lbf$

Format of Output File

The stack commands below are used to stack the element identifications (ID) and load cases (LC) in asending order per bolt. The element ID number is located in the first column and the LC numbers in the second column. For each element identification, 66011, 66012, 66013, and 66014, the bolt number within the bolt pattern is added to the end of each element identification. For example, the element identification number 66011 will have bolt numbers 1 thru 10 attached to the end for all 64 load cases. This brings the total number of load cases to 2560 (4 joints x 10 bolts x 64 load cases = 2560). See the array example to the right.

$$ID := stack(ID, ID+1, ID+2, ID+3, ID+4, ID+5, ID+6, ID+7, ID+8, ID+9)$$

$$LC := stack(LC, LC, LC, LC, LC, LC, LC, LC, LC, LC)$$

$$\begin{array}{cc} ID & LC \\ \end{array}$$
$$\begin{bmatrix} 66011001 & 2001 \\ 66011001 & 2002 \\ \ldots & \ldots \\ 66011001 & 2064 \\ 66011002 & 2001 \\ 66011002 & 2002 \\ \ldots & \ldots \\ 66011002 & 2064 \\ \ldots & \ldots \\ \ldots & \ldots \\ 66011010 & 2001 \\ 66011010 & 2002 \\ \ldots & \ldots \\ 66018010 & 2064 \end{bmatrix}$$

Array Example

Moment Distribution

$$M_{tot}^{\langle j \rangle} := \begin{pmatrix} Mx_j \\ My_j \\ Mz_j \end{pmatrix} + r_{load} \times \begin{pmatrix} Fx_j \\ Fy_j \\ Fz_j \end{pmatrix}$$

Use the cross-product to determine the additional moments acting on the fasteners.

$Mx_boltcg_j := M_{tot_{1,j}}$ $\quad$ $My_boltcg_j := M_{tot_{2,j}}$ $\quad$ $Mz_boltcg_j := M_{tot_{3,j}}$

Tension on bolts

$$Ftdirect_{i,j} := \begin{cases} 0 \cdot lbf & \text{if } Fx_j \le 0lbf \\ \dfrac{Fx_j}{num_bolts} & \text{otherwise} \end{cases}$$

Direct tensile load calculation - (The if statement checks for compression)

$$Fmz_{i,j} := \begin{cases} 0 \cdot lbf & \text{if } (y_i - ycg) = 0 \cdot in \\ \dfrac{\left[Mz_boltcg_j \cdot (y_i - ycg)\right] At_i}{\sum_i \left[(y_i - ycg)^2 \cdot At_i\right]} & \end{cases}$$

$$Fmy_{i,j} := \begin{cases} 0 \cdot lbf & \text{if } (z_i - zcg) = 0 \cdot in \\ \dfrac{My_boltcg_j \cdot (z_i - zcg) \cdot At_i}{\sum_i \left[\left(\left|z_i - zcg\right|\right)^2 \cdot At_i\right]} & \end{cases}$$

$$Ft_{i,j} := Ftdirect_{i,j} + Fmz_{i,j} + Fmy_{i,j}$$

Total Tensile load

Shear on bolts

Secondary shear on bolts $\quad Fs_{i,j} := \dfrac{Mx_boltcg_j \cdot r_i \cdot As_i}{\sum_i \left[(r_i)^2 \cdot (As_i)\right]}$

Total shear load $\quad Fstot_{i,j} := Fs_{i,j}$

(Note: The direct shear is taken by the shear pin.)

The stack commands below are used to stack applied axial load (P), applied shear load (V), and applied moment (M) in asending order per bolt. These loads are put into an array with the element/bolt number and load case number from above. See the "Output" file below.

$$P := \text{stack}\left[\left(Ft^T\right)^{\langle 1\rangle}, \left(Ft^T\right)^{\langle 2\rangle}, \left(Ft^T\right)^{\langle 3\rangle}, \left(Ft^T\right)^{\langle 4\rangle}, \left(Ft^T\right)^{\langle 5\rangle}, \left(Ft^T\right)^{\langle 6\rangle}, \left(Ft^T\right)^{\langle 7\rangle}, \left(Ft^T\right)^{\langle 8\rangle}, \left(Ft^T\right)^{\langle 9\rangle}, \left(Ft^T\right)^{\langle 10\rangle}\right]$$

$$V := \text{stack}\left[\left(Fstot^T\right)^{\langle 1\rangle}, \left(Fstot^T\right)^{\langle 2\rangle}, \left(Fstot^T\right)^{\langle 3\rangle}, \left(Fstot^T\right)^{\langle 4\rangle}, \left(Fstot^T\right)^{\langle 5\rangle}, \left(Fstot^T\right)^{\langle 6\rangle}\right]$$

$$V := \text{stack}\left[V, \left(Fstot^T\right)^{\langle 7\rangle}, \left(Fstot^T\right)^{\langle 8\rangle}, \left(Fstot^T\right)^{\langle 9\rangle}, \left(Fstot^T\right)^{\langle 10\rangle}\right]$$

$$M := \text{stack}(M, M, M, M, M, M, M, M, M, M)$$

The "Output" file below outputs an array from left to right starting with the element identification (ID), Load case number (LC), applied load on the bolt (P), applied shear on the bolt (V), and applied moment on the bolt (M). See the output array example below. The array is then written to a text file.

$$\text{Output} := \text{augment}\left(ID, LC, \frac{P}{lbf}, \frac{V}{lbf}, \frac{M}{in \cdot lbf}\right)$$

(Note: Since the ID and LC numbers are dimensionless, the P, V, and M values are divided by their units in order to make the array dimensionless.)

$$\begin{array}{ccccc} ID & LC & P & V & M \end{array}$$
$$\begin{bmatrix} 66011001 & 2001 & -1068.05 & -358.78 & 0 \\ 66011001 & 2002 & -1110.33 & -465.51 & 0 \\ \ldots & \ldots & \ldots & \ldots & \ldots \\ 66011001 & 2064 & -699.99 & -439.08 & 0 \\ 66011002 & 2001 & -813.60 & -263.63 & 0 \\ 66011002 & 2002 & -977.16 & -342.06 & 0 \\ \ldots & \ldots & \ldots & \ldots & \ldots \\ 66011002 & 2064 & -658.71 & -322.63 & 0 \\ \ldots & \ldots & \ldots & \ldots & \ldots \\ \ldots & \ldots & \ldots & \ldots & \ldots \\ 66011010 & 2001 & 1470.8 & -358.78 & 0 \\ 66011010 & 2002 & 1166.08 & -465.51 & 0 \\ \ldots & \ldots & \ldots & \ldots & \ldots \\ 66011010 & 2064 & 699.99 & -439.07 & 0 \end{bmatrix}$$

Size of the "Output" Array: $\text{rows}(\text{Output}) = 2560$

(10 bolts x 64 load cases) x 4 joints = 2560 load cases

(Note: The output array to the left is an example of the array format. The loads in this example are for format purposes only and should NOT be used in this analysis.)

Example of Output Array

$\text{WRITEPRN}(\text{"output_forces_lowerussipf_r2_abortland.txt"}) := \text{Output}$

Prepared By	Name	Date	Engineering and Science Contract Group	File Name
	Brent Dyer	09/13/05		LI_USS_r3.mcd
Checked By	John Krejci		*Structural Analysis Section*	Drawing No. SDG39135726
Title	Bolts from Lower Vacuum Case Interface to USS			

CHECK BOLTS (bolts SDG39135892-811, NAS1958C17 0.500-20UNJF-3A, Material-A-286, Insert MS51831CA206, Washer NAS1149E0863R)

The array from the text file above is read:

$data := READPRN("output_forces_lowerussipf_r2_abortland.txt")$

$s := 1 .. rows(data)$

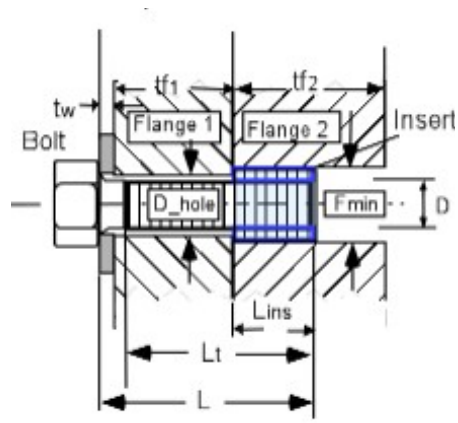

Flange 1: USS-02 Lower Vacuum Case Joint
Part number: SDG39135737
Material: 7050-T7451

Flange 2: Lower Vacuum Case Interface Plate
Part number: SDG39135789
Material: 7050-T7451

Loads from Abort Landing Load Cases

Applied tensile load $P_s := data_{s,3} \cdot lbf$

Applied shear load $V_s := data_{s,4} \cdot lbf$

Applied bending moment $M_s := data_{s,5} \cdot in \cdot lbf$

Element Identification $ID_s := data_{s,1}$

Load Case Number $LC_s := data_{s,2}$

Factors of Safety

Ultimate $SFu := 1.4$

Yield $SFy := 1.1$

Joint Separation $SFsep := 1.2$

Fitting factor $FF := 1.15$

Temperature Data (Ref Appendix C2), Abort Landing Case

Assembly $Temp_initial := 70 \cdot deg$

Maximum $Temp_max := 150 \cdot deg$

Minimum $Temp_min := 40 \cdot deg$

Bolt and Insert Data

Nominal diameter of bolt $D := 0.500 \cdot in$

Number of threads/inch $Nt := 20 \cdot \frac{1}{in}$

Total length of bolt $L := 1.797 \cdot in$

Length of insert $Lins := 0.688 \cdot in$

Threaded length $Lt := 0.735 \cdot in$

Min. external diameter of insert $Fmin := 0.615 \cdot in$

(If bolt is fully threaded, input Lt = L)

Depth of recess for insert $lr := 0.02 \cdot in$

This file uses the calculations shown in \\escfil02\2i11_mathcad\8307_bolts\thread_data.mcd

Thread Data File

Washer Data

Thickness of washer $tw := 0.063 \cdot in$

Outer Diameter of washer $Dw := .875in$

Inner Diameter of washer $Dwi := 0.515 \cdot in$

Bolt head dia. across flats (used only if there is no washer) $dw := 0.710 \cdot in$

Flange data

Thickness of flange 1 (Ref. SDG39135737) $tf1 := .854 \cdot in$

Thickness of flange 2 $tf2 := .688in$ (insert length)

Diameter of hole (Ref. SDG39135737) $D_hole := 0.571 \cdot in$

Note: If there is no washer, tw, Dw, and Dwi should be zero.

Material Property Data

Bolt

Temperature correction factor for bolt strength ultimate (Ref. MIL-HDBK-5J, fig. 6.2.1.1.1) $TSu_bolt := .96$ yield $TSy_bolt := .96$

Bolt ultimate tensile allowable stress $Ftu_bolt := 180000 \cdot psi$ (Ref. NAS1958)

Bolt ultimate shear allowable stress $Fsu_bolt := 0.6 \cdot Ftu_bolt$

Bolt yield tensile allowable $Fty_bolt := 132353 \cdot psi$ (Ref. Appendix C10)

Temperature correction factor for bolt modulus $TE_bolt := .98$ (Ref. MIL-HDBK-5J, fig. 6.2.1.1.4(a))

Modulus of elasticity of bolt $E_bolt := \left(29.1 \cdot 10^{6} \cdot psi\right)$ (Ref. MIL-HDBK-5J, table 6.2.1.0(b))

Thermal coeffecient for bolt: $\alpha_bolt_hot := 9.1 \cdot 10^{-6} \cdot \frac{\frac{in}{in}}{deg}$ $\alpha_bolt_cold := 8.9 \cdot 10^{-6} \cdot \frac{\frac{in}{in}}{deg}$

(Ref. MIL-HDBK-5J, fig. 6.2.1.0)

Insert

Temperature correction factor for insert strength $TS_ins := .96$ (Ref. MIL-HDBK-5J, fig. 6.2.1.1.1)

Ultimate tensile allowable stress $Ftu_ins := 140000 \cdot psi$ (Ref. MS51831)

Ultimate shear allowable stress $Fsu_ins := 0.6 \cdot Ftu_ins$

Washer

Temperature correction factor for washer modulus $TE_washer := .96$ (Ref. MIL-HDBK-5J, fig. 6.2.1.1.1)

Modulus of elasticity of washer $E_washer := \left(29.1 \cdot 10^{6} \cdot psi\right)$ (Ref. MIL-HDBK-5J, table 6.2.1.0(b))

Flanges

Stiffness of the joint depends upon number of members in the grip of the fasteners, Modulus of elasticity of these members, and diameters of the bolt and the washer.

Temperature correction factor for flange 1 $Tf1E := .96$ (modulus) (Ref. MIL-HDBK-5J, fig. 3.7.6.1.4 and Appendix C9)

Temperature correction factor for flange 2 $Tf2E := .96$ (modulus)

$Tf2s := .96$ (strength) (Ref. MIL-HDBK-5J, fig. 3.7.4.2.1)

Shear Strength Allowable for flanges $Fsu_f2 := 44000 \cdot psi$ (Ref. MIL-HDBK-5J, table 3.7.4.0(b1))

Modulus of elasticity for the parts in the joint (Ref. MIL-HDBK-5J, table 3.7.4.0(b1)) $E_flange1 := \left(10.3 \cdot 10^{6} \cdot psi\right)$ $E_flange2 := \left(10.3 \cdot 10^{6} \cdot psi\right)$

Coefficient of thermal expansion for flanges (Ref. MIL-HDBK-5J, table 3.7.4.0(b1) and Appendix C9)

$\alpha_flange1_hot := 12.8 \cdot 10^{-6} \cdot \frac{\frac{in}{in}}{deg}$ $\alpha_flange2_hot := 12.8 \cdot 10^{-6} \cdot \frac{\frac{in}{in}}{deg}$

$\alpha_flange1_cold := 12.1 \cdot 10^{-6} \cdot \frac{\frac{in}{in}}{deg}$ $\alpha_flange2_cold := 12.1 \cdot 10^{-6} \cdot \frac{\frac{in}{in}}{deg}$

Torque/Preload data

Maximum torque (65% of yield) $Tmax := 1032 \cdot in \cdot lbf$

Minimum torque (95 % of max. torque) $Tmin := 980 \cdot in \cdot lbf$

Torque coefficient: $k := 0.15$

Loading plane factor: $n := .5$

Preload Uncertainty: $\Gamma := 0.25$

This file uses the calculations shown in \\escfil02\2i11_mathcad\8307_bolts\multi_bolt_stiffness_insert_RevC

Insert Stiffness File

Bolt Load data

Bolt/joint stiffness factor	$\phi = 0.403$	Preload due to temperature	$Pthr_pos = 1157\ lbf$
Max. preload	$PLDmax = 18357\ lbf$		$Pthr_neg = -375.2\ lbf$
Min. preload	$PLDmin = 8564.8\ lbf$	Uncertainty factor	$\Gamma = 0.25$
Joint separation load	$max(Psep) = 3426.92\ lbf$	Torque coefficient	$k = 0.15$
Max. load on the bolt(ultimate)	$max(Pb) = 19283.6\ lbf$	Loading plane factor	$n = 0.5$
Max. load on the bolt(yield)	$max(Pby) = 19085\ lbf$	Thread shear pullout load of bolt or insert	$Pths = 50927.3\ lbf$
Bolt ultimate tensile strength	$PAt = 27143.2\ lbf$	Thread shear pullout load in parent metal	$Ppths = 28074.2\ lbf$

$Length_check = \text{"Bolt length is sufficient"}$

Summary of Margins for bolt:

Joint separation	$MS_min_{1,1} = 1.722$	Direct Thread shear Ultimate	$MS_min_{6,1} = 5.106$
Direct Tension Ultimate	$MS_min_{2,1} = 4.904$	Total Thread shear Ultimate	$MS_min_{7,1} = 0.456$
Direct Tension Yield	$MS_min_{3,1} = 4.525$	Shear Ultimate	$MS_min_{8,1} = 2.55$
Total Tension Ultimate	$MS_min_{4,1} = 0.408$	Bending Ultimate	$MS_min_{9,1} = 10$
Total Tension Yield	$MS_min_{5,1} = 0.046$	Combined shear, tension and bending ultimate	$MS_min_{10,1} = 0.379$

Determination of the smallest margin of safety for the bolt, and the failure mode:

$MSbolt := min(MS)$

$MSbolt = 0.046$ Minimum Margin of Safety

$Failure_Mode = \text{"Total Tension Yield"}$

$MS_min_ID = 66011003$	Element Identification (66011) and Bolt Number (3) for Minimum Margin
$MS_min_LC = 2031$	Load Case Number for Minimum Margin
$MS_min_P = 2855.8$	Applied Tensile Load for Minimum Margin
$MS_min_V = -2294.4$	Applied Shear Load for Minimum Margin
$MS_min_M = 0$	Applied Bending Moment for Minimum Margin

Fail-Safe Analysis for Upper Vacuum Case Interface Plate to USS-02 (Shear Pin Failure)

This portion of the analysis assumes a failure in the shear pin. The shear pin part number is SDG39135755-001. All 10 NAS1958 fasteners will take the direct shear load.

Direct shear Loads $\quad Fsd_{i,j} := \dfrac{\sqrt{\left(Fy_j\right)^2 + \left(Fz_j\right)^2}}{num_bolts}$

Total shear load $\quad Fstot_{i,j} := Fs_{i,j} + Fsd_{i,j}$

(Note: The Fs variable is the secondary shear and calculated above.)

The stack command below is used to stack the applied shear load (V) in asending order per bolt. The applied axial load (P) and applied moment (M) are stacked above and reused in the output file below. These loads are put into an array with the element/bolt number and load case number from above.

$$V := stack\left[\left(Fstot^T\right)^{\langle 1\rangle}, \left(Fstot^T\right)^{\langle 2\rangle}, \left(Fstot^T\right)^{\langle 3\rangle}, \left(Fstot^T\right)^{\langle 4\rangle}, \left(Fstot^T\right)^{\langle 5\rangle}, \left(Fstot^T\right)^{\langle 6\rangle}\right]$$

$$V := stack\left[V, \left(Fstot^T\right)^{\langle 7\rangle}, \left(Fstot^T\right)^{\langle 8\rangle}, \left(Fstot^T\right)^{\langle 9\rangle}, \left(Fstot^T\right)^{\langle 10\rangle}\right]$$

The "Output" file below outputs an array from left to right starting with the element identification (ID), Load case number (LC), applied load on the bolt (P), applied shear on the bolt (V), and applied moment on the bolt (M). The array is written to a text file. For the format of the array see the output example array above.

$$Output := augment\left(ID, LC, \frac{P}{lbf}, \frac{V}{lbf}, \frac{M}{in \cdot lbf}\right)$$

(Note: Since the ID and LC numbers are dimensionless, the P, V, and M values are divided by their units in order to make the array dimensionless.)

Size of the "Output" Array: $\quad rows(Output) = 2560$

(10 bolts x 64 load cases) x 4 joints = 2560 load cases

WRITEPRN("output_forces_lowerussipf_r2_abortland_pinfs.txt") := Output

Fail-safe Analysis (Shear Pin Failure)

The array from the text file above is read:

data_fsp := READPRN("output_forces_lowerussipf_r2_abortland_pinfs.txt")

$s := 1 .. rows(data_fsp)$

Fail-safe Loads, abort landing

Applied tensile load $P_FS_s := data_fsp_{s,3} \cdot lbf$ $ID_FS_s := data_fsp_{s,1}$

Applied shear load $V_FS_s := data_fsp_{s,4} \cdot lbf$ $LC_FS_s := data_fsp_{s,2}$

Applied bending moment $M_FS_s := data_fsp_{s,5} \cdot in \cdot lbf$

Fail-safe Factors of Safety

Ultimate $SFu_FS := 1.0$

Joint Separation $SFsep_FS := 1.0$

This file uses the calculations shown in \\escfil02\2i11_mathcad\8307_bolts\ multi_bolt_stiffness_insert_FS_RevC

Fail Safe Stiffness File

Bolt Fail-safe Load data

Joint separation load $\max(Psep_FS) = 2855.767\ lbf$

Max. load on the bolt(ultimate) $\max(Pb_FS) = 19018.8\ lbf$

Summary of fail-safe Margins for bolt:

Joint separation	$MS_minFS_{1,1} = 2.266$	Total Thread shear Ultimate	$MS_minFS_{5,1} = 0.476$
Direct Tension Ultimate	$MS_minFS_{2,1} = 7.265$	Shear Ultimate	$MS_minFS_{6,1} = 3.16$
Total Tension Ultimate	$MS_minFS_{3,1} = 0.427$	Bending Ultimate	$MS_minFS_{7,1} = 10$
Direct Thread shear Ultimate	$MS_minFS_{4,1} = 7.55$	Combined shear, tension and bending ultimate	$MS_minFS_{8,1} = 0.4217$

Determination of the smallest fail-safe margin of safety for the bolt, and the failure mode:

$MSbolt_FS := \min(MS_FS)$

$MSbolt_FS = 0.422$ $Failure_Mode_FS = \text{"Combined Shear Tension Bending Ultimate"}$

$MS_min_ID = 66012001$ Element Identification (66012) and Bolt Number (1) for Minimum Margin

$MS_min_LC = 2011$ Load Case Number for Minimum Margin

$MS_min_P = 1694$ Applied Tensile Load for Minimum Margin

$MS_min_V = 3099.7$ Applied Shear Load for Minimum Margin

$MS_min_M = 0$ Applied Bending Moment for Minimum Margin

Bolt Fail-Safe Analysis for Upper Vacuum Case Interface Plate to USS-02

Since bolt number 3 has the lowest margin of safety it is assumed that this bolt will be the first bolt to fail. There are now 9, NAS1958C 0.50-20 UNFJ fasteners, holding the USS to the lower vacuum case interface plate. The drawing number for the USS-02 Assembly to Vaccuum Case Assembly is SDG39135724.

size thread/in

$$bolt2 := \begin{pmatrix} 0.50 & 20 \\ 0.50 & 20 \\ 0.50 & 20 \\ 0.50 & 20 \\ 0.50 & 20 \\ 0.50 & 20 \\ 0.50 & 20 \\ 0.50 & 20 \\ 0.50 & 20 \end{pmatrix}$$

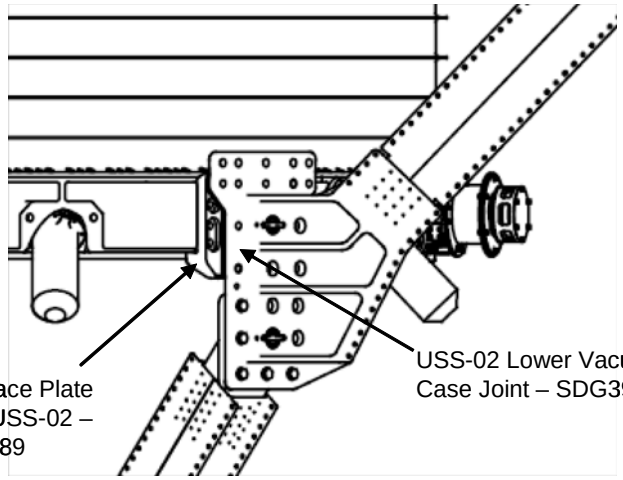

View of Vacuum Case (VC) and USS-02 Assembly

$s := 1 .. rows(bolt2)$

$N2_s := bolt2_{s,2} \cdot \frac{1}{in}$ pitch of bolt

$D2_s := bolt2_{s,1} \cdot in$ bolt diameter

$At2_s := \pi \cdot \left(\frac{D2_s - 0.9743 \cdot \frac{1}{N2_s}}{2} \right)^2$ Tensile Area of bolt

$As2_s := \pi \cdot \left(\frac{D2_s - 1.299038 \cdot \frac{1}{N2_s}}{2} \right)^2$ Shear Area of bolt

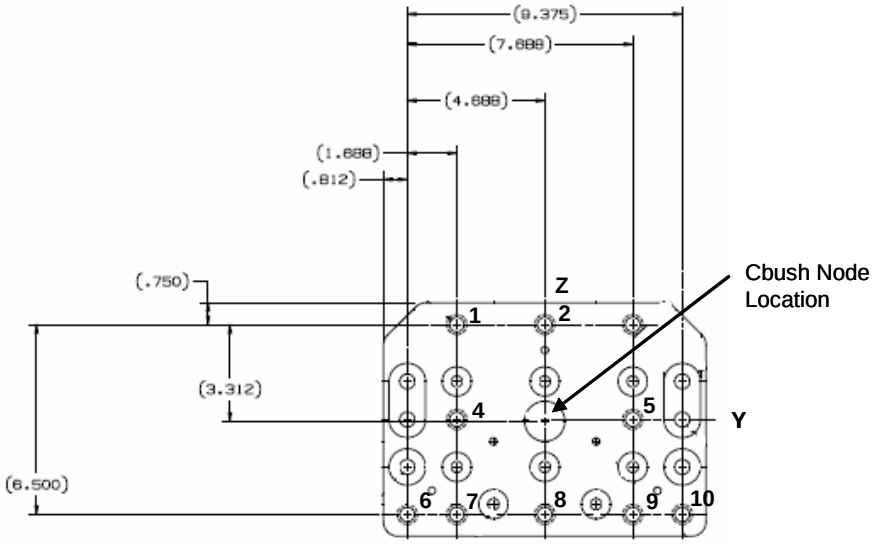

Lower Vacuum Case Interface Plate to USS Bolt Pattern for Fail-Safe Analysis

Bolt no. x co-ord y co-ord z co-ord

$$\begin{pmatrix} 1 \\ 2 \\ 4 \\ 5 \\ 6 \\ 7 \\ 8 \\ 9 \\ 10 \end{pmatrix} \quad x2 := \begin{pmatrix} 0.0 \\ 0.0 \\ 0.0 \\ 0.0 \\ 0.0 \\ 0.0 \\ 0.0 \\ 0.0 \\ 0.0 \end{pmatrix} \cdot in \quad y2 := \begin{pmatrix} -3.0 \\ 0.0 \\ -3.0 \\ 3.0 \\ -4.688 \\ -3.0 \\ 0.0 \\ 3.0 \\ 4.688 \end{pmatrix} \cdot in \quad z2 := \begin{pmatrix} 3.3125 \\ 3.3125 \\ 0.0625 \\ 0.0625 \\ -3.1875 \\ -3.1875 \\ -3.1875 \\ -3.1875 \\ -3.1875 \end{pmatrix} \cdot in$$

Location of applied forces and moments

$xforce2 := 0.0in \qquad yforce2 := 0.0in \qquad zforce2 := 0.0in$

$$cgload2 := \begin{pmatrix} xforce2 \\ yforce2 \\ zforce2 \end{pmatrix} \qquad cgload2 = \begin{pmatrix} 0 \\ 0 \\ 0 \end{pmatrix} in$$

Center of gravity of bolt group

$$xcg2 := \frac{\sum_s x2_s}{rows(x2)} \qquad xcg2 = 0\,in \qquad ycg2 := \frac{\sum_s y2_s}{rows(y2)} \qquad ycg2 = -0.333\,in \qquad zcg2 := \frac{\sum_s z2_s}{rows(z2)} \qquad zcg2 = -1.021\,in$$

$$cg_{bolt2} := \begin{pmatrix} xcg2 \\ ycg2 \\ zcg2 \end{pmatrix} \qquad cg_{bolt2} = \begin{pmatrix} 0 \\ -0.333 \\ -1.021 \end{pmatrix} in$$

Note: Since the x direction is into the plate the loads are shared equally between the bolts. However, due to a failure in bolt 3, the y and z directions in the bolt pattern are unsymmetric and have offsets from the center of gravity.

Load Vector

$$r_{load2} := cgload2 - cg_{bolt2} \qquad r_{load2} = \begin{pmatrix} 0 \\ 0.333 \\ 1.021 \end{pmatrix} in$$

Distance from CG of Bolts to Individual Bolts for shear calculations

$$r2_s := \sqrt{\left(z2_s - zcg2\right)^2 + \left(y2_s - ycg2\right)^2}$$

$$r2 = \begin{pmatrix} 5.088 \\ 4.346 \\ 2.878 \\ 3.505 \\ 4.864 \\ 3.436 \\ 2.192 \\ 3.976 \\ 5.469 \end{pmatrix} in$$

Reading database file for bolted joint, abort landing case

data := READPRN("lowerussipf_r2_abortland.txt")

$q := 1 .. rows(data)$ $\quad num_bolts2 := rows(bolt2)$

Loads from 2-04 loads model, abort landing case

Axial Load $\quad Fx2_q := data_{q,3} \cdot lbf$

Shear in Y axis $\quad Fy2_q := data_{q,4} \cdot lbf$

Shear in Z axis $\quad Fz2_q := data_{q,5} \cdot lbf$

Element Identification $\quad ID2_q := data_{q,1}$

Load Case Number $\quad LC2_q := data_{q,2}$

Torsion $\quad Mx2_q := data_{q,6} \cdot in \cdot lbf$

Moment about Y axis $\quad My2_q := data_{q,7} \cdot in \cdot lbf$

Moment about Z axis $\quad Mz2_q := data_{q,8} \cdot in \cdot lbf$

$ID2_q := ID2_q \cdot 1000 + 1$ Counter for number of bolts in pattern

Applied Bending Moment at Bolts $\quad M2_q := 0 \cdot in \cdot lbf$

Format of Output File

The stack command below is used to stack the element identifications (ID2) and load cases (LC2) in asending order per bolt.See the array example above for explanation. Note: bolt number 3 is not included.

$$ID2 := stack(ID2, ID2 + 1, ID2 + 3, ID2 + 4, ID2 + 5, ID2 + 6, ID2 + 7, ID2 + 8, ID2 + 9)$$

$$LC2 := stack(LC2, LC2, LC2, LC2, LC2, LC2, LC2, LC2, LC2)$$

Moment Distribution

$$M_{tot2}^{\langle q \rangle} := \begin{pmatrix} Mx2_q \\ My2_q \\ Mz2_q \end{pmatrix} + r_{load2} \times \begin{pmatrix} Fx2_q \\ Fy2_q \\ Fz2_q \end{pmatrix}$$

Use the cross-product to determine the additional moments acting on the fasteners.

$Mx_boltcg2_q := M_{tot2_{1,q}}$ $\quad$ $My_boltcg2_q := M_{tot2_{2,q}}$ $\quad$ $Mz_boltcg2_q := M_{tot2_{3,q}}$

Tension on bolts

$$Ftdirect2_{s,q} := \begin{cases} 0 \cdot lbf & \text{if } Fx2_q \le 0lbf \\ \dfrac{Fx2_q}{num_bolts2} & \text{otherwise} \end{cases}$$

Direct tensile load calculation

$$Fmz2_{s,q} := \begin{cases} 0 \cdot lbf & \text{if } \left(y2_s - ycg2\right) = 0 \cdot in \\ \dfrac{\left[Mz_boltcg2_q \cdot \left(y2_s - ycg2\right)\right] At2_s}{\sum_s \left[\left(y2_s - ycg2\right)^2 \cdot At2_s\right]} & \text{otherwise} \end{cases}$$

$$Fmy2_{s,q} := \begin{cases} 0 \cdot lbf & \text{if } \left(z2_s - zcg2\right) = 0 \cdot in \\ \dfrac{My_boltcg2_q \cdot \left(z2_s - zcg2\right) \cdot At2_s}{\sum_s \left[\left(\left|z2_s - zcg2\right|\right)^2 \cdot At2_s\right]} & \text{otherwise} \end{cases}$$

$Ft2_{s,q} := Ftdirect2_{s,q} + Fmz2_{s,q} + Fmy2_{s,q}$ Total Tensile load

Shear on bolts

Secondary shear on bolts $\quad$ $$Fs2_{s,q} := \frac{Mx_boltcg2_q \cdot r2_s \cdot As2_s}{\sum_s \left[\left(r2_s\right)^2 \cdot \left(As2_s\right)\right]}$$

Total shear load $\quad$ $Fstot2_{s,q} := Fs2_{s,q}$

(Note: The direct shear is taken by the shear pin.)

The stack commands below are used to stack apllied axial load (P2), applied shear load (V2), and applied moment (M2) in asending order per bolt. These loads are put into an array with the element/bolt number and load case number from above. See the "Output" file below. Notice how there is only 9 bolts, since bolt number 3 is not included.

$$P2 := \text{stack}\left[\left(Ft2^T\right)^{\langle 1\rangle}, \left(Ft2^T\right)^{\langle 2\rangle}, \left(Ft2^T\right)^{\langle 3\rangle}, \left(Ft2^T\right)^{\langle 4\rangle}, \left(Ft2^T\right)^{\langle 5\rangle}, \left(Ft2^T\right)^{\langle 6\rangle}, \left(Ft2^T\right)^{\langle 7\rangle}, \left(Ft2^T\right)^{\langle 8\rangle}, \left(Ft2^T\right)^{\langle 9\rangle}\right]$$

$$V2 := \text{stack}\left[\left(Fstot2^T\right)^{\langle 1\rangle}, \left(Fstot2^T\right)^{\langle 2\rangle}, \left(Fstot2^T\right)^{\langle 3\rangle}, \left(Fstot2^T\right)^{\langle 4\rangle}, \left(Fstot2^T\right)^{\langle 5\rangle}, \left(Fstot2^T\right)^{\langle 6\rangle}, \left(Fstot2^T\right)^{\langle 7\rangle}\right]$$

$$V2 := \text{stack}\left[V2, \left(Fstot2^T\right)^{\langle 8\rangle}, \left(Fstot2^T\right)^{\langle 9\rangle}\right]$$

$$M2 := \text{stack}(M2, M2, M2, M2, M2, M2, M2, M2, M2)$$

The "Output2" file below outputs an array from left to right starting with the element identification (ID2), Load case number (LC2), applied load on the bolt (P2), applied shear on the bolt (V2), and applied moment on the bolt (M2). See the output array example above. The array is written to a text file.

$$Output2 := \text{augment}\left(ID2, LC2, \frac{P2}{lbf}, \frac{V2}{lbf}, \frac{M2}{in \cdot lbf}\right)$$

(Note: Since the ID2 and LC2 numbers are dimensionless, the P2, V2, and M2 values are divided by their units in order to make the array dimensionless.)

Size of the "Output2" Array: $\text{rows}(Output2) = 2304$

(9 bolts x 64 load cases) x 4 joints = 2304 load cases

$\text{WRITEPRN}(\text{"output_forces_lowerussipf_r2_abortland_fs.txt"}) := Output2$

Bolt Fail-safe Results

The array from the text file above is read:

$data_fs := \text{READPRN}(\text{"output_forces_lowerussipf_r2_abortland_fs.txt"})$

$s := 1 .. \text{rows}(data_fs)$

Fail-safe Loads, abort landing

Applied tensile load $P_FS_s := data_fs_{s,3} \cdot lbf$ $ID_FS_s := data_fs_{s,1}$

Applied shear load $V_FS_s := data_fs_{s,4} \cdot lbf$ $LC_FS_s := data_fs_{s,2}$

Applied bending moment $M_FS_s := data_fs_{s,5} \cdot in \cdot lbf$

Fail-safe Factors of Safety

Ultimate $SFu_FS := 1.0$

Joint Separation $SFsep_FS := 1.0$

This file uses the calculations shown in \\escfil02\2i11_mathcad\8307_bolts\ multi_bolt_stiffness_insert_FS_RevC

Fail-Safe Stiffness File

Bolt Fail-safe Load data

Joint separation load $\max(Psep_FS) = 3007.742\ lbf$ $\max(P_FS) = 3007.742\ lbf$

Max. load on the bolt(ultimate) $\max(Pb_FS) = 19054.1\ lbf$ $\max(V_FS) = 3223.796\ lbf$

Summary of fail-safe Margins for bolt:

Joint separation	$MS_minFS_{1,1} = 2.101$	Total Thread shear Ultimate	$MS_minFS_{5,1} = 0.473$
Direct Tension Ultimate	$MS_minFS_{2,1} = 6.847$	Shear Ultimate	$MS_minFS_{6,1} = 3.16$
Total Tension Ultimate	$MS_minFS_{3,1} = 0.425$	Bending Ultimate	$MS_minFS_{7,1} = 10$
Direct Thread shear Ultimate	$MS_minFS_{4,1} = 7.12$	Combined shear, tension and bending ultimate	$MS_minFS_{8,1} = 0.4180$

Determination of the smallest fail-safe margin of safety for the bolt, and the failure mode:

$MSbolt_FS := \min(MS_FS)$

$MSbolt_FS = 0.418$ Failure_Mode_FS = "Combined Shear Tension Bending Ultimate"

$MS_min_ID = 66011002$ Element Identification (66011) and Bolt Number (2) for Minimum Margin

$MS_min_LC = 2031$ Load Case Number for Minimum Margin

$MS_min_P = 3007.7$ Applied Tensile Load for Minimum Margin

$MS_min_V = -1972.8$ Applied Shear Load for Minimum Margin

$MS_min_M = 0$ Applied Bending Moment for Minimum Margin

Shear Pin Analysis for Lower Vacuum Case Interface Plate to USS-02

The USS-02 assembly consists of four Lower Vacuum Case Joints (SDG39135737). Each Lower Vacuum Case Joint has a shear pin (SDG39135755-001) installed with two bushings. The shear pin sets inside of a inner bushing SDG39135757-001 and the inner bushing sets inside of the outer bushing SDG39135757-003.

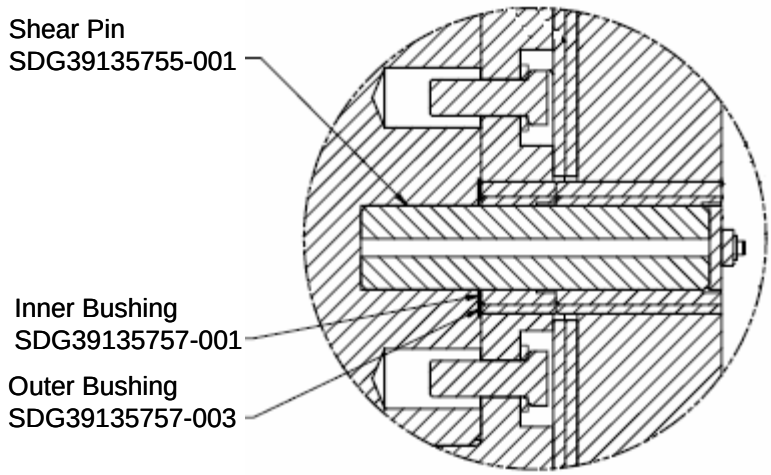

Cross Section of the Bolted Interface

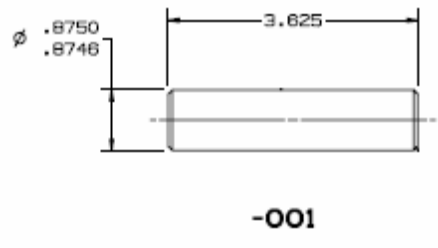

Shear Pin SDG39135755-001

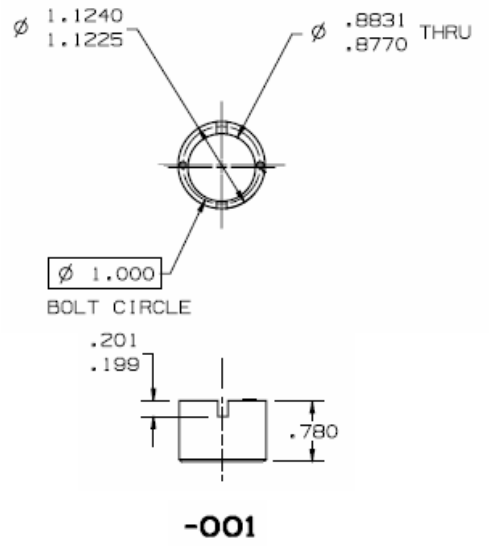

Inner Bushing SDG39135757-001

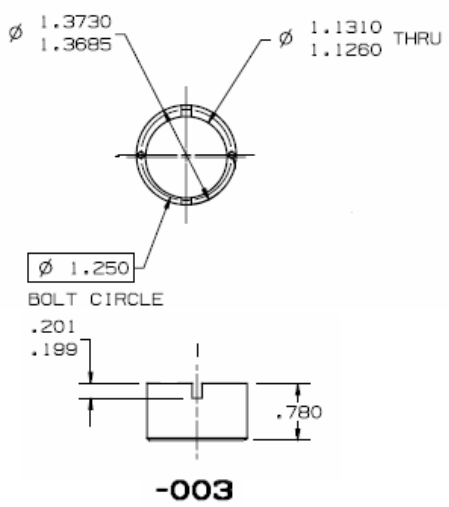

Outer Bushing SDG39135757-003

Geometry

Minimum Diameter of shear pin $dp := 0.8746 \cdot in$ (Ref. Drg. SDG39135755-001)

Outer diameter of outer bushing $do := 1.3685 \cdot in$ (Ref. Drg. SDG39135757-003)

Thickness of interface plate $tp := 0.75 \cdot in$ (Ref. Drg. SDG39135789)

Length of inner bushing $tpin := 0.78 \cdot in$ (Ref. Drg. SDG39135757-001)

Temperature Data

Shear Pin (Custom 455, H1000 bar, AMS5617):

Temperature correction factor for shear $csp := 0.96$ (Ref. MIL-HDBK-5J, table 2.6.4.1.2)

Interface Plate (Al 7050-T7451 Plate):

Temperature correction factor for ultimate $cpu := 0.96$ (Ref. MIL-HDBK-5J, fig. 3.7.4.2.1)

Temperature correction factor for yield $cpy := 0.97$

Bushings (Aluminum Bronze AMS4640, ASTM B150, alloy C63000):

Temperature correction factor for ultimate $cbu := 0.95$ (Ref. Appendix C8)

Temperature correction factor for yield $cby := 0.99$

Material Properties

Shear Pin (Custom 455, H1000 bar, AMS5617):

Allowable shear stress $Fsu := 124000 \cdot psi$ (Ref. MIL-HDBK-5J, table 2.6.4.0(b))

Interface Plate (Al 7050-T7451 Plate):

Allowable bearing stress $Fbrup := 141000 \cdot psi$ (Ref. MIL-HDBK-5J, table 3.7.4.0 (b1), 2.5 in. thick, e/D=2.0)

$Fbryp := 104000 \cdot psi$

Bushings (Aluminum Bronze AMS4640, ASTM B150, alloy C63000):

Allowable bearing stress of bushing $Fbru := 125000 \cdot psi$ (Ref. Appendix C8, Rockwell Materials data sheet 09.12.01.01,1.0)

$Fbry := 72000 \cdot psi$

Shear Pin Analysis

Loads in shear pin from Bolt Analysis (Direct Shear)

$$Fsp_j := \sqrt{\left(Fy_j\right)^2 + \left(Fz_j\right)^2}$$

$rows(Fsp) = 256$

(4 joints x 64 load cases = 256 load cases)

Shear Area of pin

$$Ash := \frac{\pi \cdot dp^2}{4}$$

$Ash = 0.601\ in^2$

Allowable shear load

$Pall := Fsu \cdot Ash \cdot csp$

$Pall = 71515.8\ lbf$

Margin of safety

$$MSp_j := \left(\frac{Pall}{Fsp_j \cdot SFu} - 1\right)$$

$min(MSp) = 0.88$

Bearing of Outer Bushing on Interface Plate

Bearing of the outer bushing on the USS-02 Lower Vacuum Case Joint is not critical since the bearing thickness is .854 in. compared to 0.75 in on the Lower Vacuum Case Interface Plate. So the margin of safety is high for bearing on the USS-02 Lower Vacuum Case. The Lower Vacuum Case Interface Plate thickness is used below.

Bearing area

$Ab := do \cdot tp$

$Ab = 1.026\ in^2$

Allowable bearing load

$Pbru := Fbrup \cdot Ab \cdot cpu$

$Pbru = 138930.1\ lbf$

$Pbry := Fbryp \cdot Ab \cdot cpy$

$Pbry = 103540.7\ lbf$

Margin of safety

$$MSu_j := \frac{Pbru}{Fsp_j \cdot SFu} - 1$$

$$MSy_j := \frac{Pbry}{Fsp_j \cdot SFy} - 1$$

$min(MSu) = 2.66$

$min(MSy) = 2.47$

Bearing of Shear Pin on Inner Bushing

Bearing area $Abp := dp \cdot tpin$ $\quad Abp = 0.682\ in^2$

Allowable bearing load $Pbrui := Fbru \cdot Abp \cdot cbu$ $\quad Pbrui = 81009.8\ lbf$

$Pbryi := Fbry \cdot Abp \cdot cby$ $\quad Pbryi = 48626.4\ lbf$

Margin of safety $MSbru_j := \frac{Pbrui}{Fsp_j \cdot SFu} - 1$ $\quad MSbry_j := \frac{Pbryi}{Fsp_j \cdot SFy} - 1$

$\min(MSbru) = 1.13$

$\min(MSbry) = 0.63$

2.4.1.3 TRD Corner Bracket to Upper Vacuum Case Joint

Prepared By	Name	Date		File Name
	Brent Dyer	12/29/06		UPVC_TRD_r5.mcd
Checked By	C. Bala		**Engineering and Science Contract Group** *Structural Analysis Section*	Drawing No. SDG39135720
Title	Bolts from Upper Vacuum Case Joint to TRD Corner Bracket			

Upper Vacuum Case Joint to TRD Corner Bracket Bolt Analysis

The AMS-02 assembly consists of four TRD (Transition Radiation Detector) Corner Brackets. There are a total of 6 fasteners attaching the Upper Vacuum Case joint to the TRD bracket. The fasteners are NAS1958C (180 ksi), 0.50-20 UNFJ. There is also one titanium shear pin and titanium bushing between the two interfaces.

There are several analyses for the TRD interface. One of the six bolt holes in the TRD bracket are thinner. (0.354" thick compared to 0.374" thick) A flange 2 thickness of .354" is used in this analysis. A stainless steel shim plate and titanium thermal bushings are assemblied between the TRD bracket and upper vacuum case joint.

size thread/in

$$bolt := \begin{pmatrix} 0.50 & 20 \\ 0.50 & 20 \\ 0.50 & 20 \\ 0.50 & 20 \\ 0.50 & 20 \\ 0.50 & 20 \end{pmatrix}$$

$i := 1 .. rows(bolt)$

pitch of bolt

$N_i := bolt_{i,2} \cdot \frac{1}{in}$

bolt diameter

$D_i := bolt_{i,1} \cdot in$

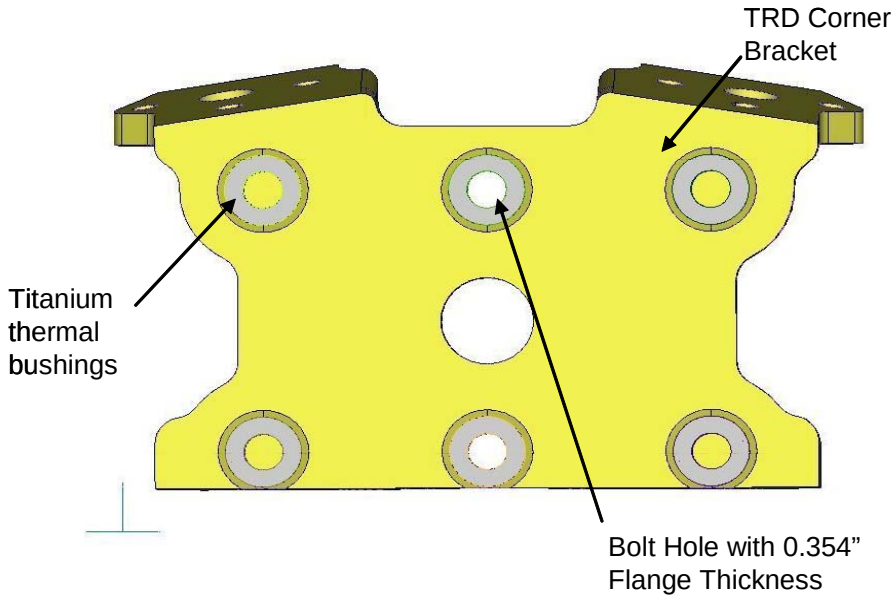

View of TRD Corner Bracket (Ref. drawing 1811/60_0001_I_VI)

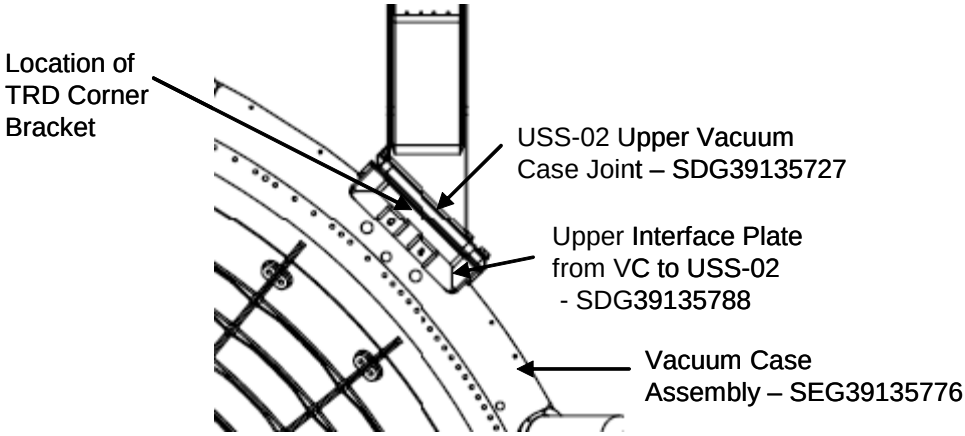

View of the AMS-02 Assembly

$$At_i := \pi \cdot \left(\frac{D_i - 0.9743 \cdot \frac{1}{N_i}}{2} \right)^2$$ Tensile Area of bolt

$$As_i := \pi \cdot \left(\frac{D_i - 1.299038 \cdot \frac{1}{N_i}}{2} \right)^2$$ Shear Area of bolt

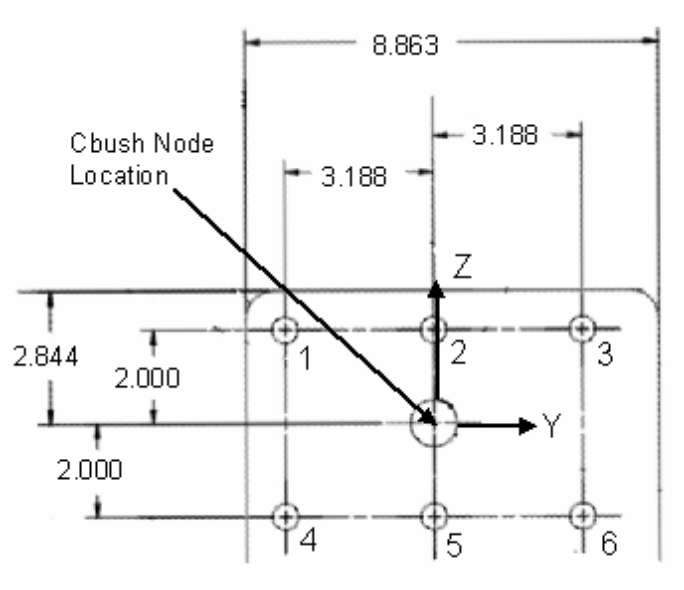

Upper Vacuum Case Joint to TRD Corner Bracket Bolt Pattern

Bolt no.	x co-ord	y co-ord	z co-ord
1	0.0	−3.188	2.0
2	0.0	0.0	2.0
3	0.0	3.188	2.0
4	0.0	−3.188	−2.0
5	0.0	0.0	−2.0
6	0.0	3.188	−2.0

$$\begin{pmatrix} 1 \\ 2 \\ 3 \\ 4 \\ 5 \\ 6 \end{pmatrix} \quad x := \begin{pmatrix} 0.0 \\ 0.0 \\ 0.0 \\ 0.0 \\ 0.0 \\ 0.0 \end{pmatrix} \cdot in \quad y := \begin{pmatrix} -3.188 \\ 0.0 \\ 3.188 \\ -3.188 \\ 0.0 \\ 3.188 \end{pmatrix} \cdot in \quad z := \begin{pmatrix} 2.0 \\ 2.0 \\ 2.0 \\ -2.0 \\ -2.0 \\ -2.0 \end{pmatrix} \cdot in$$

Location of applied forces and moments

$xforce := 0.0in$ $\quad yforce := 0.0in$ $\quad zforce := 0.0in$

$$cgload := \begin{pmatrix} xforce \\ yforce \\ zforce \end{pmatrix} \qquad cgload = \begin{pmatrix} 0 \\ 0 \\ 0 \end{pmatrix} in$$

Center of gravity of bolt group

$$xcg := \frac{\sum_i x_i}{rows(x)} \qquad xcg = 0\,in \qquad ycg := \frac{\sum_i y_i}{rows(y)} \qquad ycg = 0\,in \qquad zcg := \frac{\sum_i z_i}{rows(z)} \qquad zcg = 0\,in$$

$$cg_{bolt} := \begin{pmatrix} xcg \\ ycg \\ zcg \end{pmatrix} \qquad cg_{bolt} = \begin{pmatrix} 0 \\ 0 \\ 0 \end{pmatrix} in$$

Note: Since the x direction is into the plate the loads are shared equally between the bolts. The bolt pattern is symmetric about the y-axis and z-axis with a zero offset from the center of gravity.

Load Vector

$$r_{load} := cgload - cg_{bolt} \qquad r_{load} = \begin{pmatrix} 0 \\ 0 \\ 0 \end{pmatrix} in$$

Distance from CG of Bolts to Individual Bolts for shear calculations

$$r_i := \sqrt{\left(z_i - zcg\right)^2 + \left(y_i - ycg\right)^2} \qquad r = \begin{pmatrix} 3.763 \\ 2.000 \\ 3.763 \\ 3.763 \\ 2.000 \\ 3.763 \end{pmatrix} in$$

Loads model 2-06 was used to retrieve loads at the four bolted interfaces. A Cbush element located at the center of each TRD bracket was post processed in NASPOST for forces and moments in the x, y, and z directions. The Cbush element identifications for the four bolted interfaces are 66061, 66062. 66063, and 66064. These loads are read into an array and distributed out to the 6 bolts for each interface plate.

(Note: This joint was checked for minimum margins of safety for launch, nominal landing, and abort landing load cases. The launch cases combined with launch temperature data resulted in the lowest minimimum margins of safety. Therefore, the launch cases are used in this analysis.)

Reading database file for bolted joint , launch case

data := READPRN("trdussf_r5_launch.dat")

num_bolts := rows(bolt)

j := 1 .. rows(data) $\qquad rows(data) = 256$

Loads from 2-06 loads model, launch case

Axial Load $Fx_j := data_{j,3} \cdot lbf$

Torsion $Mx_j := data_{j,6} \cdot in \cdot lbf$

Shear in Y axis $Fy_j := data_{j,4} \cdot lbf$

Moment about Y axis $My_j := data_{j,7} \cdot in \cdot lbf$

Shear in Z axis $Fz_j := data_{j,5} \cdot lbf$

Moment about Z axis $Mz_j := data_{j,8} \cdot in \cdot lbf$

Element Identification $ID_j := data_{j,1}$

$ID_j := ID_j \cdot 10 + 1$ Counter for number of bolts in pattern

Load Case Number $LC_j := data_{j,2}$

Applied Bending Moment at Bolts $M_j := 0 \cdot in \cdot lbf$

$rows(Fy) = 256$

Format of Output File

The stack commands below are used to stack the element identifications (ID) and load cases (LC) in asending order per bolt. The element ID number is located in the first column and the LC numbers in the second column. For each element identification, 66061, 66062, 66063, and 66064, the bolt number within the bolt pattern is added to the end of each element identification. For example, the element identification number 66061 will have bolt numbers 1 thru 6 attached to the end for all 64 load cases. This brings the total number of load cases to 1536 (4 joints x 6 bolts x 64 load cases = 1536). See the array example to the right.

$ID := stack(ID, ID + 1, ID + 2, ID + 3, ID + 4, ID + 5)$

$LC := stack(LC, LC, LC, LC, LC, LC)$

$$\begin{array}{cc} ID & LC \\ \end{array}$$
$$\begin{bmatrix} 6606101 & 2001 \\ 6606101 & 2002 \\ \ldots & \ldots \\ 6606101 & 2064 \\ 6606102 & 2001 \\ 6606102 & 2002 \\ \ldots & \ldots \\ 6606102 & 2064 \\ \ldots & \ldots \\ \ldots & \ldots \\ 6606106 & 2001 \\ 6606106 & 2002 \\ \ldots & \ldots \\ 6606106 & 2064 \end{bmatrix}$$

Array Example

Moment Distribution

$$M_{tot}^{\langle j \rangle} := \begin{pmatrix} Mx_j \\ My_j \\ Mz_j \end{pmatrix} + r_{load} \times \begin{pmatrix} Fx_j \\ Fy_j \\ Fz_j \end{pmatrix}$$

Use the cross-product to determine the additional moments acting on the fasteners.

$Mx_boltcg_j := M_{tot_{1,j}}$ $\quad$ $My_boltcg_j := M_{tot_{2,j}}$ $\quad$ $Mz_boltcg_j := M_{tot_{3,j}}$

Tension on bolts

$$Ftdirect_{i,j} := \begin{cases} 0 \cdot lbf & \text{if } Fx_j \le 0lbf \\ \dfrac{Fx_j}{num_bolts} & \text{otherwise} \end{cases}$$

Direct tensile load calculation - (The if statement checks for compression)

$$Fmz_{i,j} := \begin{cases} 0 \cdot lbf & \text{if } (y_i - ycg) = 0 \cdot in \\ \dfrac{\left[Mz_boltcg_j \cdot (y_i - ycg)\right] At_i}{\sum_i \left[(y_i - ycg)^2 \cdot At_i\right]} & \end{cases}$$

$$Fmy_{i,j} := \begin{cases} 0 \cdot lbf & \text{if } (z_i - zcg) = 0 \cdot in \\ \dfrac{My_boltcg_j \cdot (z_i - zcg) \cdot At_i}{\sum_i \left[\left(\left|z_i - zcg\right|\right)^2 \cdot At_i\right]} & \end{cases}$$

$Ft_{i,j} := Ftdirect_{i,j} + Fmz_{i,j} + Fmy_{i,j}$ $\quad$ Total Tensile load

Shear on bolts

Secondary shear on bolts $\quad Fs_{i,j} := \dfrac{Mx_boltcg_j \cdot r_i \cdot As_i}{\sum_i \left[(r_i)^2 \cdot (As_i)\right]}$ $\quad$ Total shear load $\quad Fstot_{i,j} := Fs_{i,j}$

(Note: The direct shear is taken by the shear pin.)

The stack commands below are used to stack applied axial load (P), applied shear load (V), and applied moment (M) in asending order per bolt. These loads are put into an array with the element/bolt number and load case number from above. See the "Output" file below.

$$P := \text{stack}\left[\left(Ft^T\right)^{\langle 1\rangle}, \left(Ft^T\right)^{\langle 2\rangle}, \left(Ft^T\right)^{\langle 3\rangle}, \left(Ft^T\right)^{\langle 4\rangle}, \left(Ft^T\right)^{\langle 5\rangle}, \left(Ft^T\right)^{\langle 6\rangle}\right]$$

$$V := \text{stack}\left[\left(Fstot^T\right)^{\langle 1\rangle}, \left(Fstot^T\right)^{\langle 2\rangle}, \left(Fstot^T\right)^{\langle 3\rangle}, \left(Fstot^T\right)^{\langle 4\rangle}, \left(Fstot^T\right)^{\langle 5\rangle}, \left(Fstot^T\right)^{\langle 6\rangle}\right]$$

$$M := \text{stack}(M, M, M, M, M, M)$$

The "Output" file below outputs an array from left to right starting with the element identification (ID), Load case number (LC), applied load on the bolt (P), applied shear on the bolt (V), and applied moment on the bolt (M). See the output array example below. The array is then written to a text file.

$$\text{Output} := \text{augment}\left(ID, LC, \frac{P}{lbf}, \frac{V}{lbf}, \frac{M}{in \cdot lbf}\right)$$

(Note: Since the ID and LC numbers are dimensionless, the P, V, and M values are divided by their units in order to make the array dimensionless.)

$$\begin{array}{ccccc} ID & LC & P & V & M \end{array}$$
$$\begin{bmatrix} 6606101 & 2001 & -1068.05 & -358.78 & 0 \\ 6606101 & 2002 & -1110.33 & -465.51 & 0 \\ \ldots & \ldots & \ldots & \ldots & \ldots \\ 6606101 & 2064 & -699.99 & -439.08 & 0 \\ 6606102 & 2001 & -813.60 & -263.63 & 0 \\ 6606102 & 2002 & -977.16 & -342.06 & 0 \\ \ldots & \ldots & \ldots & \ldots & \ldots \\ 6606102 & 2064 & -658.71 & -322.63 & 0 \\ \ldots & \ldots & \ldots & \ldots & \ldots \\ \ldots & \ldots & \ldots & \ldots & \ldots \\ 6606106 & 2001 & 1470.8 & -358.78 & 0 \\ 6606106 & 2002 & 1166.08 & -465.51 & 0 \\ \ldots & \ldots & \ldots & \ldots & \ldots \\ 6606106 & 2064 & 699.99 & -439.07 & 0 \end{bmatrix}$$

Example of Output Array

Size of the "Output" Array: $\text{rows}(\text{Output}) = 1536$

(6 bolts x 64 load cases) x 4 joints = 1536 load cases

(Note: The output array to the left is an example of the array format. The loads in this example are for format purposes only and should NOT be used in this analysis.)

WRITEPRN("output_forces_trdussf_r5_launch.txt") := Output

CHECK BOLTS (NAS1958C24 0.500"-20 Material-A-286), Nut NAS1291-C8M, Washer NAS1587-8C

data := READPRN("output_forces_trdussf_r5_launch.txt")

$s := 1 .. rows(data)$

Flange 1: Upper USS VC Joint
Part number: SEG39135727
Material: 7050-T7451

Flange 2: TRD Bracket
Part number: 1811/60_0001_1_VI (I.S.A. tec)
Material: 7050-T7451

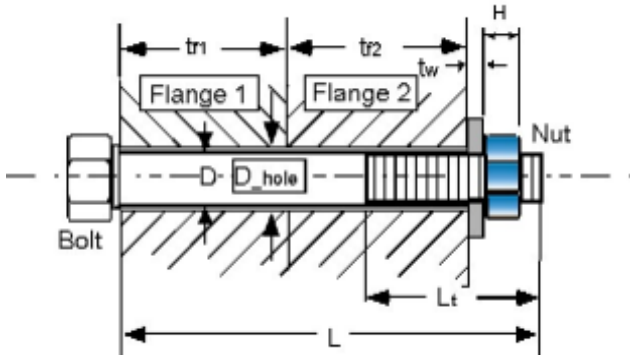

Loads from Launch Load Cases

Applied tensile load $P_s := data_{s,3} \cdot lbf$

Applied shear load $V_s := data_{s,4} \cdot lbf$

Applied bending moment $M_s := data_{s,5} \cdot in \cdot lbf$

Element Identification $ID_s := data_{s,1}$

Load Case Number $LC_s := data_{s,2}$

Factors of Safety

Ultimate $SFu := 1.4$

Yield $SFy := 1.1$

Joint Separation $SFsep := 1.2$

Fitting factor $FF := 1.15$

Temperature Data (Ref Appendix C2), Launch Case

Assembly $Temp_initial := 70 \cdot deg$

Maximum $Temp_max := 120 \cdot deg$

Minimum $Temp_min := 40 \cdot deg$

Bolt and Nut Data

Nominal diameter of bolt $D := .500 \cdot in$

Total length of bolt $L := 2.235 \cdot in$

Threaded length $Lt := 0.735 \cdot in$

(If bolt is fully threaded, input Lt = L)

Number of threads/inch $Nt := 20 \cdot \frac{1}{in}$

Height of nut $H := 0.350 \cdot in$

This file uses the calculations shown in \\escfil02\2i11_mathcad\8307_bolts\thread_data.mcd

Prepared By	Name	Date	Engineering and Science Contract Group	File Name
	Brent Dyer	12/29/06		UPVC_TRD_r5.mcd
Checked By	C. Bala		*Structural Analysis Section*	Drawing No. SDG39135720
Title	Bolts from Upper Vacuum Case Joint to TRD Corner Bracket			

Washer Data

Thickness of washers (2X) $tw := 0.156 \cdot in$

Outer Diameter of washer $Dw := 0.875in$

Inner Diameter of washer $Dwi := 0.515 \cdot in$

Bolt head dia. across flats $dw := 0.741 \cdot in$
(used only if there is no washer)

Flange data

Thickness of flange 1 $tf1 := 0.854 \cdot in$
(Ref. drawing 1811/60_0001_I_VI)

Thickness of flange 2 $tf2 := .354in$

Diameter of hole $D_hole := 0.563 \cdot in$
(Ref. drawing 1811/60_0001_I_VI)

Shim Data

Thickness of Shim $tsh := .0787 \cdot in$ (2mm)
(Ref. ams02-1697e)

Bushing Data
(Ref. new drawing for bushing, ams02-06-3044c)

Thickness of bushing $tb := .630 \cdot in$

Outer Diameter of bushing $Dbo := .9567 \cdot in$

Inner Diameter of bushing $Dbi := .563 \cdot in$

Material Property Data

Bolt

Temperature correction factor for bolt strength ultimate. $TSu_bolt := .96$ Yield $TSy_bolt := .96$
(Ref. MIL-HDBK-5J, fig. 6.2.1.1.1)

Bolt ultimate tensile allowable stress $Ftu_bolt := 180000 \cdot psi$ (Ref. NAS1958)

Bolt ultimate shear allowable stress $Fsu_bolt := 0.6 \cdot Ftu_bolt$

Bolt yield Tensile allowable stress $Fty_bolt := 132353 \cdot psi$ (Ref. Appendix C10)

Temperature correction factor for bolt modulus $TE_bolt := .98$ (Ref. MIL-HDBK-5J, fig. 6.2.1.1.4(a))

Modulus of elasticity of bolt $E_bolt := \left(29.1 \cdot 10^{6} \cdot psi\right)$ (Ref. MIL-HDBK-5J, table 6.2.1.0(b))

Thermal coeffecient for bolt $\alpha_bolt_hot := 9.1 \cdot 10^{-6} \cdot \frac{\frac{in}{in}}{deg}$ $\alpha_bolt_cold := 8.9 \cdot 10^{-6} \cdot \frac{\frac{in}{in}}{deg}$
(Ref. MIL-HDBK-5J, fig. 6.2.1.0)

Nut

Temperature correction factor for nut strength $TS_nut := .96$

Ultimate tensile allowable stress $Ftu_nut := 125000 \cdot psi$

Ultimate Shear allowable stress: $Fsu_nut := 0.6 \cdot Ftu_nut$

Ultimate axial strength of nut $Ptu_nut := 21110 \cdot lbf$ (Ref. NAS1291 page 1)

Washer

Temperature correction factor for washer modulus $TE_washer := .96$ (Ref. MIL-HDBK-5J, fig. 6.2.1.1.1)

Modulus of elasticity of washer: $E_washer := \left(29.1 \cdot 10^{6} \cdot psi\right)$ (Ref. MIL-HDBK-5J, table 6.2.1.0(b))

Shim

Temperature correction factor for shim modulus $TE_shim := .96$ (Ref. MIL-HDBK-5J, fig. 6.2.1.1.1)

Modulus of elasticity of shim: $E_shim := \left(29.1 \cdot 10^{6} \cdot psi\right)$ (Ref. MIL-HDBK-5J, table 6.2.1.0(b))

Thermal coeffecient for shim (Ref. MIL-HDBK-5J, fig. 6.2.1.0) $\alpha_shim_hot := 9.1 \cdot 10^{-6} \cdot \frac{\frac{in}{in}}{deg}$ $\alpha_shim_cold := 8.9 \cdot 10^{-6} \cdot \frac{\frac{in}{in}}{deg}$

Bushing

Temperature correction factor for bushing modulus $TE_bushing := .97$ (Ref. MIL-HDBK-5J, fig. 5.4.1.1.1)

Modulus of elasticity of bushing: $E_bushing := \left(16 \cdot 10^{6} \cdot psi\right)$
(Ref. MIL-HDBK-5J, table 5.4.1.0(c1))

Thermal coeffecient for bushing (Ref. MIL-HDBK-5J, fig 5.4.1.0) $\alpha_bushing_hot := 4.9 \cdot 10^{-6} \cdot \frac{\frac{in}{in}}{deg}$ $\alpha_bushing_cold := 4.7 \cdot 10^{-6} \cdot \frac{\frac{in}{in}}{deg}$

Flanges

Stiffness of the joint depends upon number of members in the grip of the fasteners, Modulus of elasticity of these members, and diameters of the bolt and the washer.

Temperature correction factor for flange 1 $Tf1E := .96$ (modulus)

Temperature correction factor for flange 2 $Tf2E := .96$ (modulus)

(Ref. MIL-HDBK-5J, fig. 3.7.6.1.4 and Appendix C9)

Modulus of elasticity for the parts in the joint $E_flange1 := \left(10.3 \cdot 10^{6} \cdot psi\right)$ $E_flange2 := \left(10.3 \cdot 10^{6} \cdot psi\right)$
(Ref. MIL-HDBK-5J, table 3.7.4.0(b1))

Coefficient of thermal expansion for flanges $\alpha_flange1_hot := 12.8 \cdot 10^{-6} \cdot \frac{\frac{in}{in}}{deg}$ $\alpha_flange2_hot := 12.8 \cdot 10^{-6} \cdot \frac{\frac{in}{in}}{deg}$

(Ref. MIL-HDBK-5J, table 3.7.4.0(b1) and Appendix C9) $\alpha_flange1_cold := 12.1 \cdot 10^{-6} \cdot \frac{\frac{in}{in}}{deg}$ $\alpha_flange2_cold := 12.1 \cdot 10^{-6} \cdot \frac{\frac{in}{in}}{deg}$

Torque/Preload data

Maximum torque (65% of yield) $Tmax := 1032 \cdot in \cdot lbf$

Minimum torque (95% of max. torque) $Tmin := 980 in \cdot lbf$

Torque coefficient $k := 0.15$

Loading plane factor $n := 0.5$

Preload Uncertainty $\Gamma := 0.25$

This collasped section includes the strength calculations as in the bolt template.

Joint load factor:

The joint load factor (f) is specified by Ref. 1 as:

$$\phi = \frac{Kb}{Kb + Kj}$$

where Kb is the stiffness of the bolt and Kj the stiffness of the joint. Ref. 1, does not give a method for calculating these stiffnesses. Kb and Kj will be calculated using a cylindrical stiffness method.

$$k_bolt := \frac{Ad \cdot At \cdot E_bolt}{Ad \cdot lt + At \cdot ld}$$ (Ref. 2, page 461)

This gives the washer area as: $A_washer := \pi \cdot \frac{Dw^2 - Dwi^2}{4}$

This gives the flange 1 area as: $A_f1 := \pi \cdot \frac{Dbo^2 - Dbi^2}{4}$

This gives the shim area as: $A_shim := \pi \cdot \frac{Dbo^2 - Dbi^2}{4}$

This gives the titanium bushing area as: $A_bushing := \pi \cdot \frac{Dbo^2 - Dbi^2}{4}$

This gives the flange 2 area as: $A_f2 := \pi \cdot \frac{Dbo^2 - Dbi^2}{4}$

The stiffness for each of the members is then given by treating each one as a cylinder:

$$k_washer := \begin{cases} 0.0 \cdot \frac{lbf}{in} & \text{if } tw = 0.0 \\ \frac{A_washer \cdot E_washer}{tw} & \text{otherwise} \end{cases}$$

$$k_flange1 := \frac{A_f1 \cdot E_flange1}{tf1} \qquad k_bushing := \frac{A_bushing \cdot E_bushing}{tb}$$

$$k_shim := \frac{A_shim \cdot E_shim}{tsh} \qquad k_flange2 := \frac{A_f2 \cdot E_flange2}{tf2}$$

The joint stiffness will be

$$Kj := \begin{cases} \dfrac{1}{\dfrac{1}{k_flange1} + \dfrac{1}{k_shim} + \dfrac{1}{k_bushing} + \dfrac{1}{k_flange2}} & \text{if } tw = 0 \\ \dfrac{1}{\dfrac{1}{k_flange1} + \dfrac{1}{k_shim} + \dfrac{1}{k_bushing} + \dfrac{1}{k_flange2} + \dfrac{1}{k_washer}} & \text{otherwise} \end{cases}$$

The joint load factor will then be:

$$\phi := \frac{k_bolt}{Kj + k_bolt}$$

stiffness of joint

$$K_therm := \frac{k_bolt \cdot Kj}{k_bolt + Kj}$$

Calculation of Preload on the Bolt:

Increase in preload due to increase in temperature

$$Pthr_1 := \begin{bmatrix} [(tf1)\cdot(Temp_max - Temp_initial)\cdot(\alpha_flange1_hot - \alpha_bolt_hot)] \ldots \\ +[(tf2)\cdot(Temp_max - Temp_initial)\cdot(\alpha_flange2_hot - \alpha_bolt_hot)] \ldots \\ +[(tsh)\cdot(Temp_max - Temp_initial)\cdot(\alpha_shim_hot - \alpha_bolt_hot)] \ldots \\ +[(tb)\cdot(Temp_max - Temp_initial)\cdot(\alpha_bushing_hot - \alpha_bolt_hot)] \end{bmatrix} \cdot K_therm$$

Decrease in preload due to reduction in temperature:

$$Pthr_2 := \begin{bmatrix} [(tf1)\cdot(Temp_min - Temp_initial)\cdot(\alpha_flange1_cold - \alpha_bolt_cold)] \ldots \\ +[(tf2)\cdot(Temp_min - Temp_initial)\cdot(\alpha_flange2_cold - \alpha_bolt_cold)] \ldots \\ +[(tsh)\cdot(Temp_min - Temp_initial)\cdot(\alpha_shim_cold - \alpha_bolt_cold)] \ldots \\ +[(tb)\cdot(Temp_min - Temp_initial)\cdot(\alpha_bushing_cold - \alpha_bolt_cold)] \end{bmatrix} \cdot K_therm$$

This collasped section includes the rest of the calculations for the bolt template.

Prepared By	Name	Date		File Name
	Brent Dyer	12/29/06		UPVC_TRD_r5.mcd
Checked By	C. Bala		**Engineering and Science Contract Group** *Structural Analysis Section*	Drawing No. SDG39135720
Title	Bolts from Upper Vacuum Case Joint to TRD Corner Bracket			

Bolt Load data

Bolt/joint stiffness factor	$\phi = 0.607$	Preload due to temperature	$Pthr_pos = 150.9\ lbf$
Max. preload	$PLDmax = 17350.9\ lbf$		$Pthr_neg = -60.6\ lbf$
Min. preload	$PLDmin = 8879.4\ lbf$	Uncertainty factor	$\Gamma = 0.25$
Joint separation load	$max(Psep) = 2754.298\ lbf$	Torque coefficient	$k = 0.15$
Max. load on the bolt(ultimate)	$max(Pb) = 18472.1\ lbf$	Loading plane factor	$n = 0.5$
Max. load on the bolt(yield)	$max(Pby) = 18231.9\ lbf$	Thread pullout strength required to develop full strength of bolt	$PAs = 32571.8\ lbf$
Bolt ultimate tensile strength	$PAt = 20265.6\ lbf$	Nut ultimate tensile strength	$Ptu_nut = 20265.6\ lbf$

Length_check = "Bolt length is sufficient"

Summary of Margins for bolt:

Joint separation	$MS_min_{1,1} = 3.024$	Direct Thread shear Ultimate	$MS_min_{6,1} = 7.814$
Direct Tension Ultimate	$MS_min_{2,1} = 4.484$	Total Thread shear Ultimate	$MS_min_{7,1} = 0.763$
Direct Tension Yield	$MS_min_{3,1} = 5.874$	Shear Ultimate	$MS_min_{8,1} = 9.76$
Total Tension Ultimate	$MS_min_{4,1} = 0.097$	Bending Ultimate	$MS_min_{9,1} = 10$
Total Tension Yield	$MS_min_{5,1} = 0.095$	Combined shear, tension and bending ultimate	$MS_min_{10,1} = 0.097$

Determination of the smallest margin of safety for the bolt, and the failure mode:

$MSbolt := min(MS)$ $MSbolt = 0.095$ Failure_Mode = "Total Tension Yield"

$MS_min_ID = 660633$	Element Identification (66063) and Bolt Number (3) for Minimum Margin
$MS_min_LC = 1019$	Load Case Number for Minimum Margin
$MS_min_P = 2295.2$	Applied Tensile Load for Minimum Margin
$MS_min_V = -1130$	Applied Shear Load for Minimum Margin
$MS_min_M = 0$	Applied Bending Moment for Minimum Margin

Fail-Safe Analysis for Upper Vacuum Case Interface Plate to TRD Corner Bracket (Shear Pin Failure)

This portion of the analysis assumes a failure in the shear pin. The shear pin part number is SDG39135755-005. All 6 NAS1958 fasteners will take the direct shear load.

Direct shear Loads $Fsd_{i,j} := \dfrac{\sqrt{(Fy_j)^2 + (Fz_j)^2}}{num_bolts}$

Total shear load $Fstot_{i,j} := Fs_{i,j} + Fsd_{i,j}$

(Note: The Fs variable is the secondary shear and calculated above.)

The stack command below is used to stack the applied shear load (V) in asending order per bolt. The applied axial load (P) and applied moment (M) are stacked above and reused in the output file below. These loads are put into an array with the element/bolt number and load case number from above.

$$V := stack\left[(Fstot^T)^{\langle 1\rangle}, (Fstot^T)^{\langle 2\rangle}, (Fstot^T)^{\langle 3\rangle}, (Fstot^T)^{\langle 4\rangle}, (Fstot^T)^{\langle 5\rangle}, (Fstot^T)^{\langle 6\rangle}\right]$$

The "Output" file below outputs an array from left to right starting with the element identification (ID), Load case number (LC), applied load on the bolt (P), applied shear on the bolt (V), and applied moment on the bolt (M). The array is written to a text file. For the format of the array see the output example array above.

$$Output := augment\left(ID, LC, \frac{P}{lbf}, \frac{V}{lbf}, \frac{M}{in \cdot lbf}\right)$$

(Note: Since the ID and LC numbers are dimensionless, the P, V, and M values are divided by their units in order to make the array dimensionless.)

Size of the "Output" Array: $rows(Output) = 1536$

(6 bolts x 64 load cases) x 4 joints = 1536 load cases

WRITEPRN("output_forces_upperussipf_r5_launch_pinfs.txt") := Output

Fail-safe Analysis (Shear Pin Failure)

The array from the text file above is read:

data_fsp := READPRN("output_forces_upperussipf_r5_launch_pinfs.txt")

$s := 1 .. rows(data_fsp)$

Fail-safe Loads, launch cases

Applied tensile load $P_FS_s := data_fsp_{s,3} \cdot lbf$ $ID_FS_s := data_fsp_{s,1}$

Applied shear load $V_FS_s := data_fsp_{s,4} \cdot lbf$ $LC_FS_s := data_fsp_{s,2}$

Applied bending moment $M_FS_s := data_fsp_{s,5} \cdot in \cdot lbf$

Fail-safe Factors of Safety

Ultimate $SFu_FS := 1.0$

Joint Separation $SFsep_FS := 1.0$

This file uses the calculations shown in \\escfil02\2i11_mathcad\8307_bolts\ multi_bolt_stiffness_insert_FS_RevC

Fail Safe Stiffness File

Bolt Fail-safe Load data

Joint separation load $\max(Psep_FS) = 2295.248\ lbf$

Max. load on the bolt(ultimate) $\max(Pb_FS) = 18151.8\ lbf$

$\max(P_FS) = 2295.248\ lbf$

$\max(V_FS) = 2273.481\ lbf$

Summary of fail-safe Margins for bolt:

Joint separation	$MS_minFS_{1,1} = 3.829$	Total Thread shear Ultimate	$MS_minFS_{5,1} = 0.794$
Direct Tension Ultimate	$MS_minFS_{2,1} = 6.678$	Shear Ultimate	$MS_minFS_{6,1} = 6.79$
Total Tension Ultimate	$MS_minFS_{3,1} = 0.116$	Bending Ultimate	$MS_minFS_{7,1} = 10$
Direct Thread shear Ultimate	$MS_minFS_{4,1} = 10.000$	Combined shear, tension and bending ultimate	$MS_minFS_{8,1} = 0.1165$

Determination of the smallest fail-safe margin of safety for the bolt, and the failure mode:

$MSbolt_FS := \min(MS_FS)$

$MSbolt_FS = 0.116$ Failure_Mode_FS = "Combined Shear Tension Bending Ultimate"

$MS_min_ID = 660633$ Element Identification (66063) and Bolt Number (3) for Minimum Margin

$MS_min_LC = 1019$ Load Case Number for Minimum Margin

$MS_min_P = 2295.2$ Applied Tensile Load for Minimum Margin

$MS_min_V = 28.5$ Applied Shear Load for Minimum Margin

$MS_min_M = 0$ Applied Bending Moment for Minimum Margin

Bolt Fail-Safe Analysis for Upper Vacuum Case Interface Plate to TRD Corner Bracket

Since bolt number 3 has the lowest margin of safety it is assumed that this bolt will be the first bolt to fail. There are now 5, NAS1958C 0.50-20 UNFJ fasteners, holding the upper vacuum case joint to the TRD corner bracket. The drawing number for the USS-02 Assembly to Vaccuum Case Assembly is SDG39135724.

size thread/in

$$bolt2 := \begin{pmatrix} 0.50 & 20 \\ 0.50 & 20 \\ 0.50 & 20 \\ 0.50 & 20 \\ 0.50 & 20 \end{pmatrix}$$

$$s := 1 .. rows(bolt2)$$

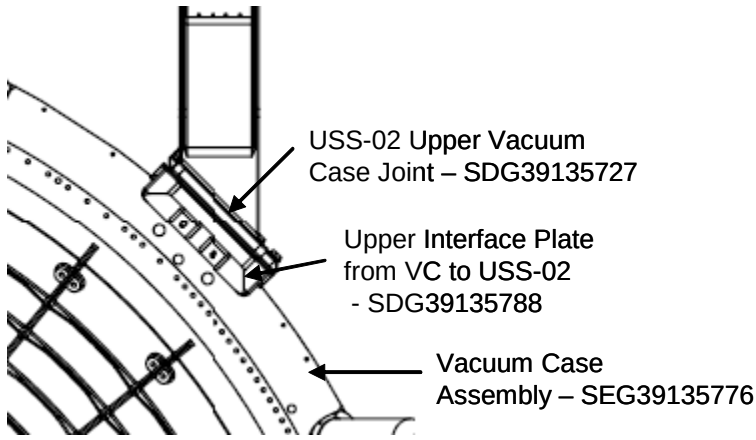

Top View of Vacuum Case and USS-02 Assembly

$N2_s := bolt2_{s,2} \cdot \frac{1}{in}$ pitch of bolt

$D2_s := bolt2_{s,1} \cdot in$ bolt diameter

$$At2_s := \pi \cdot \left(\frac{D2_s - 0.9743 \cdot \frac{1}{N2_s}}{2} \right)^2$$ Tensile Area of bolt

$$As2_s := \pi \cdot \left(\frac{D2_s - 1.299038 \cdot \frac{1}{N2_s}}{2} \right)^2$$ Shear Area of bolt

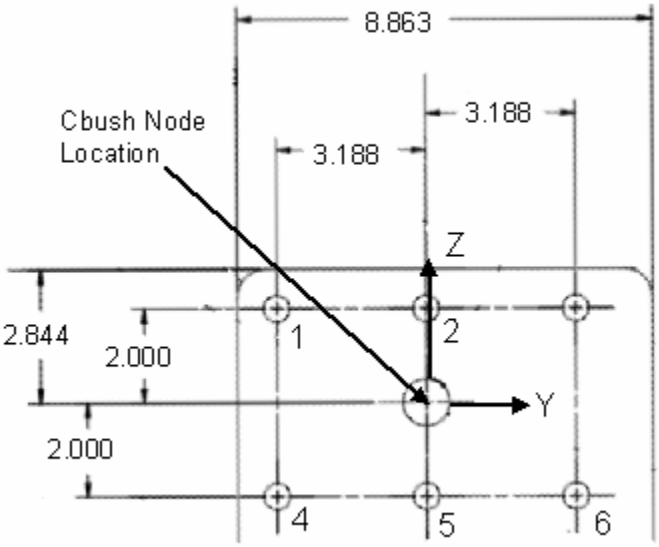

Upper Vacuum Case Joint to TRD Corner Bracket Bolt Pattern

Bolt no.	x co-ord	y co-ord	z co-ord
$\begin{pmatrix}1\\2\\4\\5\\6\end{pmatrix}$	$x2 := \begin{pmatrix}0.0\\0.0\\0.0\\0.0\\0.0\end{pmatrix}\cdot in$	$y2 := \begin{pmatrix}-3.188\\0.0\\-3.188\\0.0\\3.188\end{pmatrix}\cdot in$	$z2 := \begin{pmatrix}2.0\\2.0\\-2.0\\-2.0\\-2.0\end{pmatrix}\cdot in$

Location of applied forces and moments

$xforce2 := 0.0in$ $\quad yforce2 := 0.0in$ $\quad zforce2 := 0.0in$

$$cgload2 := \begin{pmatrix}xforce2\\yforce2\\zforce2\end{pmatrix} \qquad cgload2 = \begin{pmatrix}0\\0\\0\end{pmatrix} in$$

Center of gravity of bolt group

$$xcg2 := \frac{\sum_s x2_s}{rows(x2)} \qquad xcg2 = 0\,in \qquad ycg2 := \frac{\sum_s y2_s}{rows(y2)} \qquad ycg2 = -0.638\,in \qquad zcg2 := \frac{\sum_s z2_s}{rows(z2)} \qquad zcg2 = -0.4\,in$$

$$cg_{bolt2} := \begin{pmatrix}xcg2\\ycg2\\zcg2\end{pmatrix} \qquad cg_{bolt2} = \begin{pmatrix}0\\-0.638\\-0.4\end{pmatrix} in$$

Note: Since the x direction is into the plate the loads are shared equally between the bolts. However, due to a failure in bolt 3, the y and z directions in the bolt pattern are unsymmetric and have offsets from the center of gravity.

Load Vector

$$r_{load2} := cgload2 - cg_{bolt2} \qquad r_{load2} = \begin{pmatrix}0\\0.638\\0.4\end{pmatrix} in$$

Distance from CG of Bolts to Individual Bolts for shear calculations

$$r2_s := \sqrt{\left(z2_s - zcg2\right)^2 + \left(y2_s - ycg2\right)^2} \qquad r2 = \begin{pmatrix} 3.502 \\ 2.483 \\ 3.011 \\ 1.722 \\ 4.147 \end{pmatrix} in$$

Reading database file for bolted joint, launch case

$data := READPRN("trdussf_r5_launch.dat")$

$q := 1 .. rows(data) \qquad num_bolts2 := rows(bolt2)$

Loads from 2-04 loads model, launch case

Axial Load $\quad Fx2_q := data_{q,3} \cdot lbf$

Shear in Y axis $\quad Fy2_q := data_{q,4} \cdot lbf$

Shear in Z axis $\quad Fz2_q := data_{q,5} \cdot lbf$

Torsion $\quad Mx2_q := data_{q,6} \cdot in \cdot lbf$

Moment about Y axis $\quad My2_q := data_{q,7} \cdot in \cdot lbf$

Moment about Z axis $\quad Mz2_q := data_{q,8} \cdot in \cdot lbf$

Element Identification $\quad ID2_q := data_{q,1}$

$ID2_q := ID2_q \cdot 10 + 1$ Counter for number of bolts in pattern

Load Case Number $\quad LC2_q := data_{q,2}$

Applied Bending Moment at Bolts $\quad M2_q := 0 \cdot in \cdot lbf$

Format of Output File

The stack command below is used to stack the element identifications (ID2) and load cases (LC2) in asending order per bolt.See the array example above for explanation. Note: bolt number 3 is not included.

$ID2 := stack(ID2, ID2 + 1, ID2 + 3, ID2 + 4, ID2 + 5)$

$LC2 := stack(LC2, LC2, LC2, LC2, LC2)$

Moment Distribution

$$M_{tot2}^{\langle q \rangle} := \begin{pmatrix} Mx2_q \\ My2_q \\ Mz2_q \end{pmatrix} + r_{load2} \times \begin{pmatrix} Fx2_q \\ Fy2_q \\ Fz2_q \end{pmatrix}$$

Use the cross-product to determine the additional moments acting on the fasteners.

$Mx_boltcg2_q := M_{tot2_{1,q}}$ $\quad$ $My_boltcg2_q := M_{tot2_{2,q}}$ $\quad$ $Mz_boltcg2_q := M_{tot2_{3,q}}$

Tension on bolts

$$Ftdirect2_{s,q} := \begin{cases} 0 \cdot lbf & \text{if } Fx2_q \le 0lbf \\ \dfrac{Fx2_q}{num_bolts2} & \text{otherwise} \end{cases}$$

Direct tensile load calculation

$$Fmz2_{s,q} := \begin{cases} 0 \cdot lbf & \text{if } \left(y2_s - ycg2\right) = 0 \cdot in \\ \dfrac{\left[Mz_boltcg2_q \cdot \left(y2_s - ycg2\right)\right] At2_s}{\sum_s \left[\left(y2_s - ycg2\right)^2 \cdot At2_s\right]} & \end{cases}$$

$$Fmy2_{s,q} := \begin{cases} 0 \cdot lbf & \text{if } \left(z2_s - zcg2\right) = 0 \cdot in \\ \dfrac{My_boltcg2_q \cdot \left(z2_s - zcg2\right) \cdot At2_s}{\sum_s \left[\left(\left|z2_s - zcg2\right|\right)^2 \cdot At2_s\right]} & \end{cases}$$

$Ft2_{s,q} := Ftdirect2_{s,q} + Fmz2_{s,q} + Fmy2_{s,q}$ Total Tensile load

Shear on bolts

Secondary shear on bolts $\quad$ $$Fs2_{s,q} := \frac{Mx_boltcg2_q \cdot r2_s \cdot As2_s}{\sum_s \left[\left(r2_s\right)^2 \cdot \left(As2_s\right)\right]}$$

Total shear load $\quad$ $Fstot2_{s,q} := Fs2_{s,q}$

(Note: The direct shear is taken by the shear pin.)

The stack commands below are used to stack apllied axial load (P2), applied shear load (V2), and applied moment (M2) in asending order per bolt. These loads are put into an array with the element/bolt number and load case number from above. See the "Output" file below. Notice how there is only 7 bolts, since bolt number 3 is not included.

$$P2 := \text{stack}\left[\left(Ft2^T\right)^{\langle 1\rangle}, \left(Ft2^T\right)^{\langle 2\rangle}, \left(Ft2^T\right)^{\langle 3\rangle}, \left(Ft2^T\right)^{\langle 4\rangle}, \left(Ft2^T\right)^{\langle 5\rangle}\right]$$

$$V2 := \text{stack}\left[\left(Fstot2^T\right)^{\langle 1\rangle}, \left(Fstot2^T\right)^{\langle 2\rangle}, \left(Fstot2^T\right)^{\langle 3\rangle}, \left(Fstot2^T\right)^{\langle 4\rangle}, \left(Fstot2^T\right)^{\langle 5\rangle}\right]$$

$$M2 := \text{stack}(M2, M2, M2, M2, M2)$$

The "Output2" file below outputs an array from left to right starting with the element identification (ID2), Load case number (LC2), applied load on the bolt (P2), applied shear on the bolt (V2), and applied moment on the bolt (M2). See the output array example above. The array is written to a text file.

$$Output2 := \text{augment}\left(ID2, LC2, \frac{P2}{lbf}, \frac{V2}{lbf}, \frac{M2}{in \cdot lbf}\right)$$

(Note: Since the ID2 and LC2 numbers are dimensionless, the P2, V2, and M2 values are divided by their units in order to make the array dimensionless.)

Size of the "Output2" Array: $\text{rows}(Output2) = 1280$

(5 bolts x 64 load cases) x 4 joints = 1280 load cases

$$\text{WRITEPRN}(\text{"output_forces_upperussipf_r5_launch_fs.txt"}) := Output2$$

Bolt Fail-safe Results

The array from the text file above is read:

$$data_fs := \text{READPRN}(\text{"output_forces_upperussipf_r5_launch_fs.txt"})$$

$$s := 1 .. \text{rows}(data_fs)$$

Prepared By	Name	Date	Engineering and Science Contract Group	File Name
	Brent Dyer	12/29/06		UPVC_TRD_r5.mcd
Checked By	C. Bala		*Structural Analysis Section*	Drawing No. SDG39135720
Title	Bolts from Upper Vacuum Case Joint to TRD Corner Bracket			

Fail-safe Loads, launch cases

Applied tensile load $P_FS_s := data_fs_{s,3} \cdot lbf$ $ID_FS_s := data_fs_{s,1}$

Applied shear load $V_FS_s := data_fs_{s,4} \cdot lbf$ $LC_FS_s := data_fs_{s,2}$

Applied bending moment $M_FS_s := data_fs_{s,5} \cdot in \cdot lbf$

Fail-safe Factors of Safety

Ultimate $SFu_FS := 1.0$

Joint Separation $SFsep_FS := 1.0$

This file uses the calculations shown in \\escfil02\2i11_mathcad\8307_bolts\ multi_bolt_stiffness_insert_FS_RevC

Fail-Safe Stiffness File

Bolt Fail-safe Load data

Joint separation load $\max(Psep_FS) = 3749.381\ lbf$ $\max(P_FS) = 3749.381\ lbf$

Max. load on the bolt(ultimate) $\max(Pb_FS) = 18659.2\ lbf$ $\max(V_FS) = 2273.481\ lbf$

Summary of fail-safe Margins for bolt:

Joint separation	$MS_minFS_{1,1} = 1.956$	Total Thread shear Ultimate	$MS_minFS_{5,1} = 0.746$
Direct Tension Ultimate	$MS_minFS_{2,1} = 3.700$	Shear Ultimate	$MS_minFS_{6,1} = 6.79$
Total Tension Ultimate	$MS_minFS_{3,1} = 0.086$	Bending Ultimate	$MS_minFS_{7,1} = 10$
Direct Thread shear Ultimate	$MS_minFS_{4,1} = 6.55$	Combined shear, tension and bending ultimate	$MS_minFS_{8,1} = 0.086$

Determination of the smallest fail-safe margin of safety for the bolt, and the failure mode:

$MSbolt_FS := \min(MS_FS)$

$MSbolt_FS = 0.086$ $Failure_Mode_FS = \text{"Combined Shear Tension Bending Ultimate"}$

$MS_min_ID = 660616$ Element Identification (66061) and Bolt Number (6) for Minimum Margin

$MS_min_LC = 1032$ Load Case Number for Minimum Margin

$MS_min_P = 3749.4$ Applied Tensile Load for Minimum Margin

$MS_min_V = -1235.9$ Applied Shear Load for Minimum Margin

$MS_min_M = 0$ Applied Bending Moment for Minimum Margin

Prepared By	Name	Date		File Name
	Brent Dyer	12/29/06		UPVC_TRD_r5.mcd
Checked By	C. Bala		**Engineering and Science Contract Group** *Structural Analysis Section*	Drawing No. SDG39135720
Title	Bolts from Upper Vacuum Case Joint to TRD Corner Bracket			

Shear Pin Analysis for Upper Vacuum Case Joint to TRD Corner Bracket

The USS-02 assembly consists of four Upper Vacuum Case Joints (SDG39135727). Each Upper Vacuum Case Joint to TRD corner bracket has a titanium shear pin (ams02-06-3045b). The shear pin sets inside of a bushing (ams02-06-3044b).

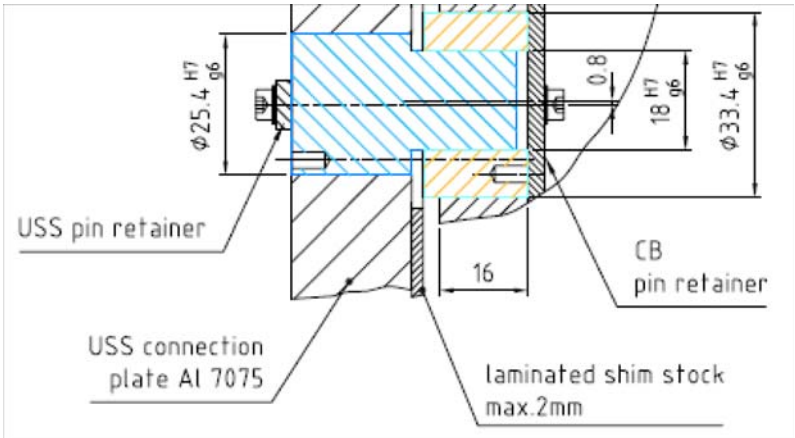

Cross Section of the Shear Pin Interface

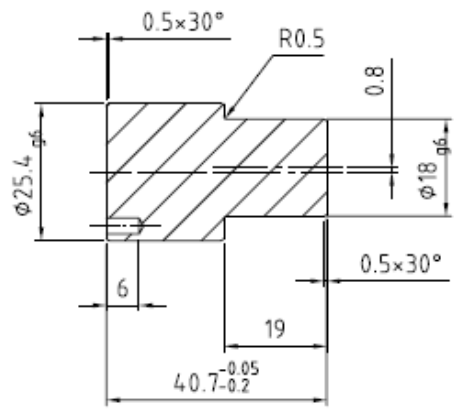

Shear Pin ams02-06-3045b

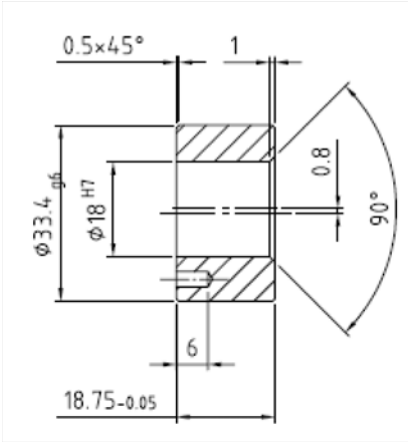

Bushing ams02-06-3044b

Reading database file for bolted joint , launch case

data3 := READPRN("trdussf_r5_launch.dat")

num_bolts := rows(bolt)

j := 1 .. rows(data3)

rows(data3) = 256

Loads from 2-06 loads model, launch case

Shear in Y axis $Fy_j := data3_{j,4} \cdot lbf$

Shear in Z axis $Fz_j := data3_{j,5} \cdot lbf$

Element Identification $ID3_j := data3_{j,1}$

Load Case Number $LC3_j := data3_{j,2}$

Geometry

(Note: Shear Pin is stepped. Small diameter geometry is used)

Minimum Diameter of shear pin $dp := 0.7087 \cdot in$ (Ref. Drg. ams02-06-3045b)

Outer diameter of eccentric bushing $do := 1.315 \cdot in$ (Ref. Drg. ams02-06-3044b)

Thickness of TRD Bracket $tp := 0.630 \cdot in$ (Ref. Drg. 1811/60_0001_1_VI)

Length of eccentric bushing $tpin := 0.630 \cdot in$ (Ref. Drg. ams02-06-3044b)

(Ref. new drawing for bushing for tpin, was 18.75mm now 16.00mm)

Temperature Data

Shear Pin (Titanium TI6AL4V, AMS4928):

Temperature correction factor for shear $csp := 0.94$ (Ref. MIL-HDBK-5J, fig. 5.4.1.1.1)

TRD Bracket (Al 7050-T7451 Plate):

Temperature correction factor for ultimate $cpu := 0.91$ (Ref. MIL-HDBK-5J, fig. 3.7.4.2.1)

Temperature correction factor for yield $cpy := 0.97$

Bushings (Titanium TI6AL4V AMS4928):

Temperature correction factor for ultimate $cbu := 0.94$ (Ref. MIL-HDBK-5J, fig. 5.4.1.1.1)

Temperature correction factor for yield $cby := 0.93$ (Ref. MIL-HDBK-5J, fig. 5.4.1.1.1)

Material Properties

Shear Pin (Titanium TI6AL4V, AMS4928):

Allowable shear stress $Fsu := 82000 \cdot psi$ (Ref. MIL-HDBK-5J, table 5.4.1.0(c1))

Allowable ultimate stress $Ftu := 134000 \cdot psi$ (Ref. MIL-HDBK-5J, table 5.4.1.0(c1))

TRD Bracket (Al 7050-T7451 Plate):

Allowable bearing stress $Fbru := 141000 \cdot psi$ (Ref. MIL-HDBK-5J, table 3.7.4.0 (b1), 2.5 in. thick, e/D=2.0)

$Fbry := 104000 \cdot psi$

Bushings (Titanium TI6AL4V AMS4928):

Allowable bearing stress of bushing $Fbru := 200000 \cdot psi$ (Ref. MIL-HDBK-5J, table 5.4.1.0(c1))

$Fbry := 177000 \cdot psi$

Shear Pin Analysis

Shear Loads in shear pin from Bolt Analysis (Direct Shear) $Fsp_j := \sqrt{(Fy_j)^2 + (Fz_j)^2}$ $\quad rows(Fsp) = 256$

(4 joints x 64 load cases = 256 load cases)

Gap between Interface Face $gap := .197 \cdot in$ (Maximum gap of 5mm) (Ref. ams02-1697e)

Moment due to Gap (Pin is guided) $Mg_j := \frac{Fsp_j \cdot gap}{2}$

Shear Area of pin $Ash := \frac{\pi \cdot dp^2}{4}$ $\quad Ash = 0.394\ in^2$

Moment of Inertia of pin $Int := \frac{\pi \cdot dp^4}{64}$ $\quad Int = 0.012\ in^4$

Outer Most Fiber $c1 := \frac{dp}{2}$ $\quad c = 0.226\ in$

Stresses on cross section:

Normal Stress is bending: $\sigma g_j := \frac{Mg_j \cdot c1}{Int}$ $\quad max(\sigma g) = 20507\ psi$

Shear due to transverse loading $\tau v_j := \sqrt{\left(\frac{Fy_j}{Ash}\right)^2 + \left(\frac{Fz_j}{Ash}\right)^2}$ $\quad max(\tau v) = 18443\ psi$

Principal Stresses:

$$\sigma 1pg_j := \frac{\sigma g_j}{2} + \left[\left(\frac{\sigma g_j}{2}\right)^2 + (\tau v_j)^2\right]^{\frac{1}{2}}$$

$max(\sigma 1pg) = 31355\ psi$

$min(\sigma 1pg) = 2654\ psi$

$$\sigma 2pg_j := \frac{\sigma g_j}{2} - \left[\left(\frac{\sigma g_j}{2}\right)^2 + (\tau v_j)^2\right]^{\frac{1}{2}}$$

$min(\sigma 2pg) = -10848\ psi$

$max(\sigma 2pg) = -918.176\ psi$

Maximum principal stress is:

$$\sigma maxg_j := \begin{cases} |\sigma 1pg_j| & \text{if } |\sigma 1pg_j| \geq |\sigma 2pg_j| \\ |\sigma 2pg_j| & \text{otherwise} \end{cases}$$

$\max(\sigma maxg) = 31354.788\ \text{psi}$

Maximum shear:

$$\tau max_j := \sqrt{(\sigma g_j)^2 + (\tau v_j)^2}$$

$\max(\tau max) = 27580\ \text{psi}$

Margins of safety:

Ultimate

$$MSu_j := \begin{cases} \dfrac{Ftu}{SFu \cdot \sigma maxg_j} - 1 & \text{if } \sigma maxg_j \neq 0 \cdot psi \\ 10000 & \text{otherwise} \end{cases}$$

$\min(MSu) = 2.05$

Ultimate, shear

$$MSsu_j := \begin{cases} \left(\dfrac{Fsu}{SFu \cdot \tau max_j}\right) - 1 & \text{if } \tau max_j \neq 0 \cdot psi \\ 10000 & \text{otherwise} \end{cases}$$

$\min(MSsu) = 1.12$

Determine Elem ID and Load Case

Idendifying Element ID Number, Load Case Number, and Loads for Minimum Margin

$MS_min_ID4 = 66063$ Element Identification for Minimum Margin

$MS_min_LC4 = 1020$ Load Case Number for Minimum Margin

$MS_min_Fy4 = 7035$ Shear in Y axis

$MS_min_Fz4 = -1854$ Shear in Z axis

$output := augment(ID3, LC3, MSsu)$ $sorted := csort(output, 3)$

$$\left(sorted^T\right)^{\langle 1 \rangle^T} = (66063 \quad 1020 \quad 1.12)$$

Bearing of Titanium Shear Pin Bushing on TRD Bracket

Bearing of the shear pin on the USS-02 Upper Vacuum Case Joint is not critical since the bearing thickness is .854" compared to 0.630" on the TRD Bracket. So the margin of safety is high for bearing on the USS-02 Upper Vacuum Case. The TRD Bracket thickness is used below.

Bearing area $Ab := do \cdot tp$ $Ab = 0.828\ in^2$

Allowable bearing load $Pbru := Fbru \cdot Ab \cdot cpu$ $Pbru = 150777.9\ lbf$

$Pbry := Fbry \cdot Ab \cdot cpy$ $Pbry = 142236.6\ lbf$

Margin of safety $MSu := \frac{Pbru}{Fsp \cdot SFu} - 1$

$MSy := \frac{Pbry}{Fsp \cdot SFy} - 1$

$\min(MSu) = 13.804$

$\min(MSy) = 16.774$

Bearing of Shear Pin on Bushing

Gap between shear pin and retainer $gap2 := .0787 \cdot in$ (2mm from drawing ams02-1697e)

Bearing area $Abp := dp \cdot (tpin - gap2)$ $Abp = 0.391\ in^2$

Allowable bearing load $Pbrui := Fbru \cdot Abp \cdot cbu$ $Pbrui = 73452.8\ lbf$

$Pbryi := Fbry \cdot Abp \cdot cby$ $Pbryi = 64314.2\ lbf$

Margin of safety $MSbru := \frac{Pbrui}{Fsp \cdot SFu} - 1$ $MSbry := \frac{Pbryi}{Fsp \cdot SFy} - 1$

$\min(MSbru) = 6.212$

$\min(MSbry) = 7.037$

Prepared By	Name	Date	Engineering and Science Contract Group	File Name
	Brent Dyer	12/29/06		UPVC_TRD_r5.mcd
Checked By	C. Bala		*Structural Analysis Section*	Drawing No. SDG39135720
Title	Bolts from Upper Vacuum Case Joint to TRD Corner Bracket			

Stress Concentration Factor on Stepped Shear Pin:

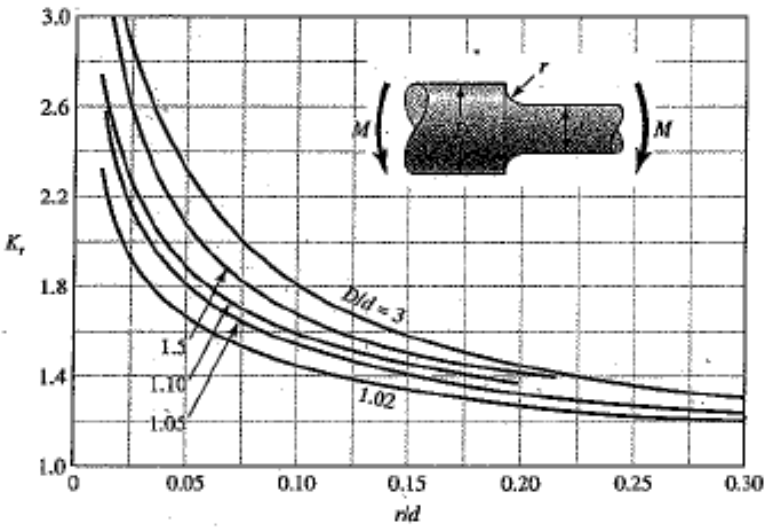

Diameter of large portion of shear pin $Dlo := 1.00 \cdot in$

Radius on stepped shear pin $rad := .0787 \cdot in$ (radius of 2.0mm) **(Ref. new drawing for shear pin for rad, was .5mm now 2.0mm)**

$\frac{Dlo}{dp} = 1.411$

Stress Concentration Factor $SCF := 1.61$

$\frac{rad}{dp} = 0.111$

Peak Stress $\sigma peak_j := SCF \cdot \sigma g_j$ $\max(\sigma peak) = 33015.7\ psi$

$\tau peak_j := SCF \cdot \tau v_j$ $\max(\tau peak) = 29693.1\ psi$

$$MSup_j := \frac{Ftu}{SFu \cdot \sigma peak_j} - 1$$ $\min(MSup) = 1.899$

$$MSsup_j := \frac{Fsu}{SFu \cdot \tau peak_j} - 1$$ $\min(MSsup) = 0.973$

Fracture Assessment for Stepped Titanium Shear Pin:

Radius on stepped shear pin $\text{rad} = 0.0787\,\text{in}$ (radius of 2.0mm) **(Ref. new drawing for shear pin for rad, was .5mm now 2.0mm)**

```
FATIGUE CRACK GROWTH ANALYSIS
-----------------------------
DATE: 19-Jan-07   TIME: 09:48:34
NASGRO(R) Version 4.2, December 2004.
Copyright (c) 2004 Southwest Research Institute(R).
All Rights Reserved.

PROBLEM TITLE
-------------
TI Shear Pin rad 2.0mm
U.S. customary units [inches, ksi, ksi sqrt(in)]

Crack Growth Model: Non Interaction
Ratio of growth increment to current crk size=  0.0050

Mode of Computations: Regular
 Beta factors computed regularly
 (Cycle-by-cycle, if the block is such)

Equation/Table    : NASGRO Equation

Material Data Entry : Manual


GEOMETRY
--------
MODEL: SC13-Surface crack at fillet (cut) - shear bolt.

Major Diameter,  D =    0.7500

Fillet Radius =    0.0787

a/c is constant    =    0.6450

FLAW SIZE: (User specified)

a   (init.) =  0.5000E-01
c   (init.) =  0.7752E-01
a/c (init.) =  0.6450
```

```
MATERIAL
--------

MATL 1:   TITANIUM ALLOYS [**Manual data input**]
          Ternary alloys

Material Header Info.:

Material  1 Data ID: P3EM23AB1
Alloy Description :   Ti-6Al-4V (ELI); RA(1700F/4h)

Alloy Cond/HT : Forged; L-T & T-L; LA; Room temp

Product Form :

Environment :

Specimen Type :
Specimen Orientation :
Specimen Thickness :
Specimen Width :
Specimen Test Frequency :
Data Reference :

Material Properties:

:Matl:  UTS :  YS  :  K1e :  K1c :  Ak :  Bk :  Thk  :  Kc  : Keac :
: No.:      :      :      :      :     :     :       :      :      :
:----:------:------:------:------:-----:-----:-------:------:------:
:  1 : 134.0:  82.0:  95.0:  75.0:     :     :       :  75.0:      :

:Matl:--------------- Crack Growth Eqn Constants -------------:
: No.:    C    :  n  :  p :  q :  DK1 : Cth+ :Cth- :Alpha:Smax/:
:    :         :     :    :    :      :      :     :     :SIGo :
:----:---------:-----:----:----:------:------:-----:-----:-----:
:  1 :0.150D-08:3.000:0.50:0.75:  5.27:  0.06: 0.10: 2.50: 0.30:

Small crack threshold parameters:
a0 =     0.00150
Limit of ratio DKth(S)/DKth(L) =    0.20

Environmental FCG factor for matl no.  1  is =   1.0000


Cth+ = 0, Cth- = 0 are used throughout
```

```
TI Shear Pin rad 2.0mm
 MODEL: SC13

 FATIGUE SPECTRUM
 ----------------


 [Note: Stress = Input Value * Scale Factor]

 Stress Scaling Factors for Block Case:  1

 Scale Factor for Stress S0:   0.20507
 Scale Factor for Stress S1:    0.0000

 Equiv. flights or hours for Block Case:  1

 No. Flights per block :    1.0000

 Schedule info. was input manually

 Total No. of Blocks in Schedule =     4

    Block Number and Case Correspondences
  Block Number                Block Case No.
 From   -   To
     1   -      4                       1

 Stresses: Tension, bending or pin

 ---------------------------------

  TI Shear Pin rad 2.0mm
   MODEL: SC13

   FATIGUE SCHEDULE BLOCK INPUT TABLE
   ----------------------------------


   SINGLE DISTINCT BLOCK


    S  : M:  NUMBER     :        S0         :        S1         :
    T  : A:    OF       :                   :                   :
    E  : T:  FATIGUE    :                   :                   :
    P  : L:  CYCLES     :    (t1) :  (t2)   :    (t1) :  (t2)   :
   ----:--:-------------:---------:---------:---------:---------:
       1: 1:        2.00 :  -100.00:   100.00:  -100.00:   100.00:
       2: 1:        4.00 :   -90.00:    90.00:   -90.00:    90.00:
       3: 1:        8.00 :   -80.00:    80.00:   -80.00:    80.00:
       4: 1:       15.00 :   -70.00:    70.00:   -70.00:    70.00:
       5: 1:       49.00 :   -60.00:    60.00:   -60.00:    60.00:
       6: 1:       81.00 :   -50.00:    50.00:   -50.00:    50.00:
       7: 1:      178.00 :   -40.00:    40.00:   -40.00:    40.00:
       8: 1:      641.00 :   -30.00:    30.00:   -30.00:    30.00:
       9: 1:     3120.00 :   -20.00:    20.00:   -20.00:    20.00:
      10: 1:     3405.00 :   -10.00:    10.00:   -10.00:    10.00:
      11: 1:     5019.00 :    -7.00:     7.00:    -7.00:     7.00:
      12: 1:    28853.00 :    -5.00:     5.00:    -5.00:     5.00:
      13: 1:    91655.00 :    -3.00:     3.00:    -3.00:     3.00:

   Environmental Crack Growth Check for Sustained Stresses
   (Kmax less than Keac):  NOT SET
                           -------
```

```
TI Shear Pin rad 2.0mm
 MODEL: SC13

 FATIGUE SCHEDULE BLOCK STRESS TABLE
 -----------------------------------


  S  : M:  NUMBER     :        S0         :        S1         :
  T  : A:    OF       :                   :                   :
  E  : T:  FATIGUE    :       (ksi)       :       (ksi)       :
  P  : L:  CYCLES     :    (t1) :  (t2)   :    (t1) :  (t2)   :
 ----:--:------------:---------:---------:---------:---------:
    1: 1:        2.00 :   -20.51:    20.51:     0.00:     0.00:
    2: 1:        4.00 :   -18.46:    18.46:     0.00:     0.00:
    3: 1:        8.00 :   -16.41:    16.41:     0.00:     0.00:
    4: 1:       15.00 :   -14.35:    14.35:     0.00:     0.00:
    5: 1:       49.00 :   -12.30:    12.30:     0.00:     0.00:
    6: 1:       81.00 :   -10.25:    10.25:     0.00:     0.00:
    7: 1:      178.00 :    -8.20:     8.20:     0.00:     0.00:
    8: 1:      641.00 :    -6.15:     6.15:     0.00:     0.00:
    9: 1:     3120.00 :    -4.10:     4.10:     0.00:     0.00:
   10: 1:     3405.00 :    -2.05:     2.05:     0.00:     0.00:
   11: 1:     5019.00 :    -1.44:     1.44:     0.00:     0.00:
   12: 1:    28853.00 :    -1.03:     1.03:     0.00:     0.00:
   13: 1:    91655.00 :    -0.62:     0.62:     0.00:     0.00:

 Environmental Crack Growth Check for Sustained Stresses
 (Kmax less than Keac):  NOT SET
                         -------
TI Shear Pin rad 2.0mm
 MODEL: SC13

 ANALYSIS RESULTS:
 -----------------

 Schedule Block  Step         Cycles        Crack a        Crack c

        0     0     0           0.00    0.50000E-01    0.77519E-01
        1     1     -      133030.00    0.50002E-01    0.77522E-01
        1     2     -      266060.00    0.50004E-01    0.77525E-01
        1     3     -      399090.00    0.50005E-01    0.77528E-01
        1     4     -      532120.00    0.50007E-01    0.77530E-01
        2     1     -      665150.00    0.50009E-01    0.77533E-01
        2     2     -      798180.00    0.50011E-01    0.77536E-01
        2     3     -      931210.00    0.50013E-01    0.77539E-01
        2     4     -     1064240.00    0.50014E-01    0.77542E-01

 FINAL RESULTS:
 Critical Crack Size has NOT been reached.

 at Cycle No.     91655.00
 of Load Step No.        13
 of Block No.             4
 of Schedule No.          2
 Crack Size     a =  0.500143E-01
 Total Cycles =   1064240.0
 Total Flights =   8.0000000
 Corresponding semi crack length, c = 0.775416E-01

  ==============================
   General spectrum diagnostics
  ==============================


Execution time (hh:mm:ss): 00:00:00.0
Note: this is elapsed wall-clock time, not CPU time!
```

2.4.1.4 Sill Bracket to Sill Joint

Prepared By	Name	Date		File Name
	Brent Dyer	06/02/06		Sill_Bracket_r3.mcd
Checked By	C. Bala		**Engineering and Science Contract Group** *Structural Analysis Section*	Drawing No. SDG39135726
Title	Bolts from Sill Bracket to Sill Joint			

Sill Bracket to Sill Joint Bolt Analysis

The USS-02 assembly consists of two Sill Brackets. There are a total of 6 fasteners attaching the Sill Bracket to the Sill Joint. The fasteners are NAS1958C (180 ksi), 0.50-20 UNFJ. The drawing number for the Upper USS-02 Assembly is SDG39135726.

size thread/in

$$bolt := \begin{pmatrix} 0.50 & 20 \\ 0.50 & 20 \\ 0.50 & 20 \\ 0.50 & 20 \\ 0.50 & 20 \\ 0.50 & 20 \end{pmatrix}$$

$$i := 1..\,rows(bolt)$$

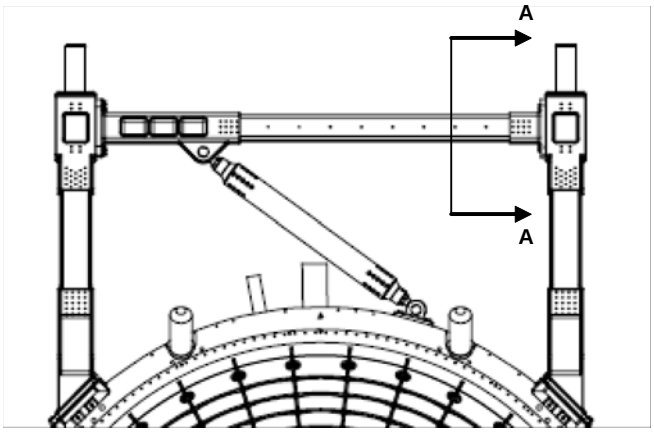

View of Upper USS-02 Assembly SDG39135726

$N_i := bolt_{i,2} \cdot \frac{1}{in}$ pitch of bolt

$D_i := bolt_{i,1} \cdot in$ bolt diameter

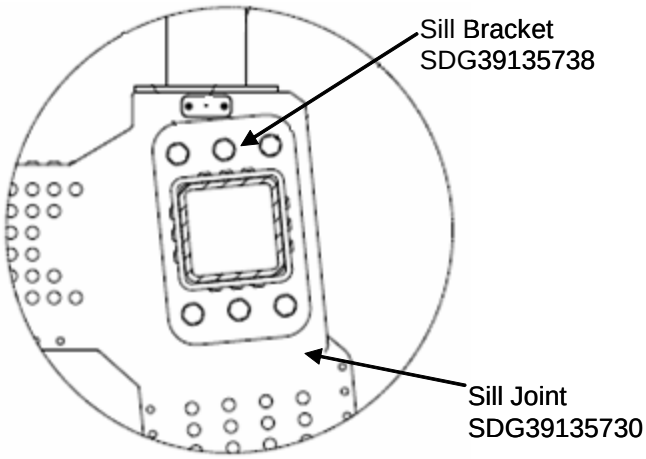

Cross Section A-A

$$At_i := \pi \cdot \left(\frac{D_i - 0.9743 \cdot \frac{1}{N_i}}{2} \right)^2$$ Tensile Area of bolt

$$As_i := \pi \cdot \left(\frac{D_i - 1.299038 \cdot \frac{1}{N_i}}{2} \right)^2$$ Shear Area of bolt

Prepared By	Name	Date	Engineering and Science Contract Group	File Name
	Brent Dyer	06/02/06		Sill_Bracket_r3.mcd
Checked By	C. Bala		*Structural Analysis Section*	Drawing No. SDG39135726
Title	Bolts from Sill Bracket to Sill Joint			

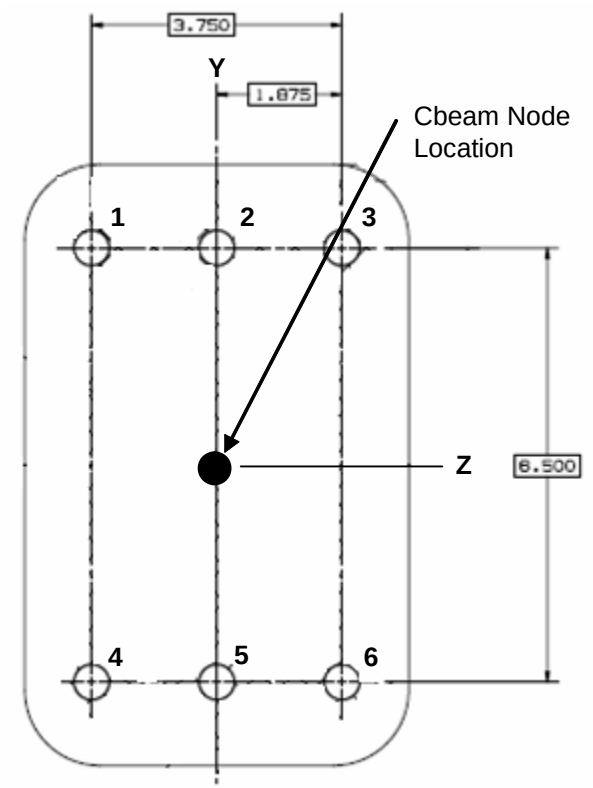

Sill Bracket to Sill Joint Bolt Pattern

Bolt no.	x co-ord	y co-ord	z co-ord
1	0.0	3.25	−1.875
2	0.0	3.25	0.0
3	0.0	3.25	1.875
4	0.0	−3.25	−1.875
5	0.0	−3.25	0.0
6	0.0	−3.25	1.875

$$\begin{pmatrix}1\\2\\3\\4\\5\\6\end{pmatrix} \qquad x := \begin{pmatrix}0.0\\0.0\\0.0\\0.0\\0.0\\0.0\end{pmatrix}\cdot in \qquad y := \begin{pmatrix}3.25\\3.25\\3.25\\-3.25\\-3.25\\-3.25\end{pmatrix}\cdot in \qquad z := \begin{pmatrix}-1.875\\0.0\\1.875\\-1.875\\0.0\\1.875\end{pmatrix} in$$

Location of applied forces and moments

$xforce := 0.0in \qquad yforce := 0.0in \qquad zforce := 0.0in$

$$cgload := \begin{pmatrix}xforce\\yforce\\zforce\end{pmatrix} \qquad cgload = \begin{pmatrix}0\\0\\0\end{pmatrix} in$$

Center of gravity of bolt group

$$xcg := \frac{\sum_i x_i}{rows(x)} \qquad xcg = 0\,in \qquad ycg := \frac{\sum_i y_i}{rows(y)} \qquad ycg = 0\,in \qquad zcg := \frac{\sum_i z_i}{rows(z)} \qquad zcg = 0\,in$$

$$cg_{bolt} := \begin{pmatrix} xcg \\ ycg \\ zcg \end{pmatrix} \qquad cg_{bolt} = \begin{pmatrix} 0 \\ 0 \\ 0 \end{pmatrix} in$$

Note: Since the x direction is into the plate the loads are shared equally between the bolts. The bolt pattern is symmetric about the y-axis and z-axis with a zero offset from the center of gravity.

Load Vector

$$r_{load} := cgload - cg_{bolt} \qquad r_{load} = \begin{pmatrix} 0 \\ 0 \\ 0 \end{pmatrix} in$$

Distance from CG of Bolts to Individual Bolts for shear calculations

$$r_i := \sqrt{(z_i - zcg)^2 + (y_i - ycg)^2} \qquad r = \begin{pmatrix} 3.752 \\ 3.250 \\ 3.752 \\ 3.752 \\ 3.250 \\ 3.752 \end{pmatrix} in$$

Loads model 2-04 was used to retrieve loads at the two bolted interfaces. A Cbeam element located at the center of each sill bracket was post processed in NASPOST for forces and moments in the x, y, and z directions. The Cbeam element identifications for the two bolted interfaces are 1705 and 1706. These loads are read into an array and distributed out to the 6 bolts for each interface plate.

(Note: This joint was checked for minimum margins of safety for launch, nominal landing, and abort landing load cases. The launch cases combined with launch temperature data resulted in the lowest minimimum margins of safety. Therefore, the launch cases are used in this analysis.)

Reading database file for bolted joint, launch case

data := READPRN("sillbracket_r2_launch.txt")

j := 1 .. rows(data)

num_bolts := rows(bolt)

Loads from 2-04 loads model, launch case

Axial Load $Fx_j := data_{j,7} \cdot lbf$

Shear in Y axis $Fy_j := data_{j,5} \cdot lbf$

Shear in Z axis $Fz_j := data_{j,6} \cdot lbf$

Torsion $Mx_j := data_{j,8} \cdot in \cdot lbf$

Moment about Y axis $My_j := data_{j,4} \cdot in \cdot lbf$

Moment about Z axis $Mz_j := data_{j,3} \cdot in \cdot lbf$

Element Identification $ID_j := data_{j,1}$

$ID_j := ID_j \cdot 100 + 1$ Counter for number of bolts in pattern

Load Case Number $LC_j := data_{j,2}$

Applied Bending Moment at Bolts $M_j := 0 \cdot in \cdot lbf$

Format of Output File

The stack commands below are used to stack the element identifications (ID) and load cases (LC) in asending order per bolt. The element ID number is located in the first column and the LC numbers in the second column. For each element identification, 1705 and 1706, the bolt number within the bolt pattern is added to the end of each element identification. For example, the element identification number 1705 will have bolt numbers 1 thru 6 attached to the end for all 64 load cases. This brings the total number of load cases to 768 (2 joints x 6 bolts x 64 load cases = 768). See the array example to the right.

$ID := stack(ID, ID+1, ID+2, ID+3, ID+4, ID+5)$

$LC := stack(LC, LC, LC, LC, LC, LC)$

$$\begin{array}{cc} ID & LC \\ \end{array}$$
$$\begin{bmatrix} 170501 & 2001 \\ 170501 & 2002 \\ \ldots & \ldots \\ 170501 & 2064 \\ 170502 & 2001 \\ 170502 & 2002 \\ \ldots & \ldots \\ 170502 & 2064 \\ \ldots & \ldots \\ \ldots & \ldots \\ 170506 & 2001 \\ 170506 & 2002 \\ \ldots & \ldots \\ 170506 & 2064 \end{bmatrix}$$

Array Example

Moment Distribution

$$M_{tot}^{\langle j \rangle} := \begin{pmatrix} Mx_j \\ My_j \\ Mz_j \end{pmatrix} + r_{load} \times \begin{pmatrix} Fx_j \\ Fy_j \\ Fz_j \end{pmatrix}$$

Use the cross-product to determine the additional moments acting on the fasteners.

$Mx_boltcg_j := M_{tot_{1,j}}$ $\quad$ $My_boltcg_j := M_{tot_{2,j}}$ $\quad$ $Mz_boltcg_j := M_{tot_{3,j}}$

Tension on bolts

$$Ftdirect_{i,j} := \begin{cases} 0 \cdot lbf & \text{if } Fx_j \le 0lbf \\ \dfrac{Fx_j}{num_bolts} & \text{otherwise} \end{cases}$$

Direct tensile load calculation - (The if statement checks for compression)

$$Fmz_{i,j} := \begin{cases} 0 \cdot lbf & \text{if } (y_i - ycg) = 0 \cdot in \\ \dfrac{\left[Mz_boltcg_j \cdot (y_i - ycg)\right] At_i}{\sum_i \left[(y_i - ycg)^2 \cdot At_i\right]} & \end{cases}$$

$$Fmy_{i,j} := \begin{cases} 0 \cdot lbf & \text{if } (z_i - zcg) = 0 \cdot in \\ \dfrac{My_boltcg_j \cdot (z_i - zcg) \cdot At_i}{\sum_i \left[\left(\left|z_i - zcg\right|\right)^2 \cdot At_i\right]} & \end{cases}$$

$$Ft_{i,j} := Ftdirect_{i,j} + Fmz_{i,j} + Fmy_{i,j}$$

Total Tensile load

Shear on bolts

Secondary shear on bolts $\quad Fs_{i,j} := \dfrac{Mx_boltcg_j \cdot r_i \cdot As_i}{\sum_i \left[(r_i)^2 \cdot (As_i)\right]}$

Direct shear on bolts $\quad Fsd_{i,j} := \dfrac{\sqrt{(Fz_j)^2 + (Fy_j)^2}}{num_bolts}$

Total shear load $\quad Fstot_{i,j} := Fsd_{i,j} + Fs_{i,j}$

The stack commands below are used to stack applied axial load (P), applied shear load (V), and applied moment (M) in asending order per bolt. These loads are put into an array with the element/bolt number and load case number from above. See the "Output" file below.

$$P := \text{stack}\left[\left(Ft^T\right)^{\langle 1\rangle}, \left(Ft^T\right)^{\langle 2\rangle}, \left(Ft^T\right)^{\langle 3\rangle}, \left(Ft^T\right)^{\langle 4\rangle}, \left(Ft^T\right)^{\langle 5\rangle}, \left(Ft^T\right)^{\langle 6\rangle}\right]$$

$$V := \text{stack}\left[\left(Fstot^T\right)^{\langle 1\rangle}, \left(Fstot^T\right)^{\langle 2\rangle}, \left(Fstot^T\right)^{\langle 3\rangle}, \left(Fstot^T\right)^{\langle 4\rangle}, \left(Fstot^T\right)^{\langle 5\rangle}, \left(Fstot^T\right)^{\langle 6\rangle}\right]$$

$$M := \text{stack}(M, M, M, M, M, M)$$

The "Output" file below outputs an array from left to right starting with the element identification (ID), Load case number (LC), applied load on the bolt (P), applied shear on the bolt (V), and applied moment on the bolt (M). See the output array example below. The array is then written to a text file.

$$\text{Output} := \text{augment}\left(ID, LC, \frac{P}{lbf}, \frac{V}{lbf}, \frac{M}{in \cdot lbf}\right)$$

(Note: Since the ID and LC numbers are dimensionless, the P, V, and M values are divided by their units in order to make the array dimensionless.)

$$\begin{array}{ccccc} ID & LC & P & V & M \end{array}$$
$$\begin{bmatrix} 170501 & 2001 & -1068.05 & -358.78 & 0 \\ 170501 & 2002 & -1110.33 & -465.51 & 0 \\ \ldots & \ldots & \ldots & \ldots & \ldots \\ 170501 & 2064 & -699.99 & -439.08 & 0 \\ 170502 & 2001 & -813.60 & -263.63 & 0 \\ 170502 & 2002 & -977.16 & -342.06 & 0 \\ \ldots & \ldots & \ldots & \ldots & \ldots \\ 170502 & 2064 & -658.71 & -322.63 & 0 \\ \ldots & \ldots & \ldots & \ldots & \ldots \\ \ldots & \ldots & \ldots & \ldots & \ldots \\ 170506 & 2001 & 1470.8 & -358.78 & 0 \\ 170506 & 2002 & 1166.08 & -465.51 & 0 \\ \ldots & \ldots & \ldots & \ldots & \ldots \\ 170506 & 2064 & 699.99 & -439.07 & 0 \end{bmatrix}$$

Size of the "Output" Array: $\text{rows}(\text{Output}) = 768$

(6 bolts x 64 load cases) x 2 joints = 768 load cases

(Note: The output array to the left is an example of the array format. The loads in this example are for format purposes only and should NOT be used in this analysis.)

Example of Output Array

$$\text{WRITEPRN}(\text{"output_forces_sillbracket_r2_launch.txt"}) := \text{Output}$$

CHECK BOLTS (bolts SDG39135892-815, NAS1958C13 0.500-20UNJF-3A, Material-A-286, Insert MS51831CA206, Washer NAS1149E0863R)

The array from the text file above is read:

$data := READPRN("output_forces_sillbracket_r2_launch.txt")$

$s := 1 .. rows(data)$

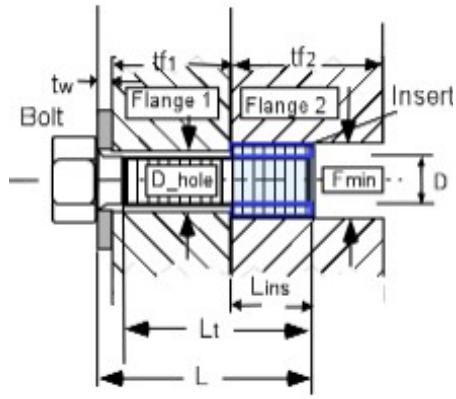

Flange 1: Sill Bracket
Part number: SDG39135738
Material: 7050-T7451

Flange 2: Sill Joint
Part number: SEG39135730
Material: 7050-T7451

Loads

Applied tensile load $P_s := data_{s,3} \cdot lbf$

Applied shear load $V_s := data_{s,4} \cdot lbf$

Applied bending moment $M_s := data_{s,5} \cdot in \cdot lbf$

Element Identification $ID_s := data_{s,1}$

Load Case Number $LC_s := data_{s,2}$

Factors of Safety

Ultimate $SFu := 1.4$

Yield $SFy := 1.1$

Joint Separation $SFsep := 1.2$

Fitting factor $FF := 1.15$

Temperature Data (Ref Appendix C2), Launch Case

Assembly $Temp_initial := 70 \cdot deg$

Maximum $Temp_max := 120 \cdot deg$

Minimum $Temp_min := 40 \cdot deg$

Bolt and Insert Data

Nominal diameter of bolt $D := 0.500 \cdot in$

Total length of bolt $L := 1.547 \cdot in$

Threaded length $Lt := 0.735 \cdot in$

(If bolt is fully threaded, input Lt = L)

Number of threads/inch $Nt := 20 \cdot \frac{1}{in}$

Length of insert $Lins := 0.688 \cdot in$

Min. external diameter of insert $Fmin := 0.615 \cdot in$

Depth of recess for insert $lr := 0.02 \cdot in$

This file uses the calculations shown in \\escfil02\2i11_mathcad\8307_bolts\thread_data.mcd

Thread Data File

Washer Data

Thickness of washer $tw := 0.063 \cdot in$

Outer Diameter of washer $Dw := .875in$

Inner Diameter of washer $Dwi := 0.515 \cdot in$

Bolt head dia. across flats (used only if there is no washer) $dw := 0.710 \cdot in$

Flange data

Thickness of flange 1 (Ref. SDG39135738) $tf1 := .750 \cdot in$

Thickness of flange 2 (Ref. SDG39135730) $tf2 := .688in$ (insert length)

Diameter of hole $D_hole := 0.539 \cdot in$

Note: If there is no washer, tw, Dw, and Dwi should be zero.

Material Property Data

Bolt

Temperature correction factor for bolt strength ultimate (Ref. MIL-HDBK-5J, fig. 6.2.1.1.1) $TSu_bolt := .98$ yield $TSy_bolt := .98$

Bolt ultimate tensile allowable stress $Ftu_bolt := 180000 \cdot psi$ (Ref. NAS1958)

Bolt ultimate shear allowable stress $Fsu_bolt := 0.6 \cdot Ftu_bolt$

Bolt yield tensile allowable $Fty_bolt := 132353 \cdot psi$ (Ref. Appendix C10)

Temperature correction factor for bolt modulus $TE_bolt := .98$ (Ref. MIL-HDBK-5J, fig. 6.2.1.1.4(a))

Modulus of elasticity of bolt $E_bolt := \left(29.1 \cdot 10^{6} \cdot psi\right)$ (Ref. MIL-HDBK-5J, table 6.2.1.0(b))

Thermal coeffecient for bolt: $\alpha_bolt_hot := 9.1 \cdot 10^{-6} \cdot \frac{\frac{in}{in}}{deg}$ $\alpha_bolt_cold := 8.9 \cdot 10^{-6} \cdot \frac{\frac{in}{in}}{deg}$

(Ref. MIL-HDBK-5J, fig. 6.2.1.0)

Insert

Temperature correction factor for insert strength $TS_ins := .98$ (Ref. MIL-HDBK-5J, fig. 6.2.1.1.1)

Ultimate tensile allowable stress $Ftu_ins := 140000 \cdot psi$ (Ref. MS51831)

Ultimate shear allowable stress $Fsu_ins := 0.6 \cdot Ftu_ins$

Washer

Temperature correction factor for washer modulus $TE_washer := .98$ (Ref. MIL-HDBK-5J, fig. 6.2.1.1.1)

Modulus of elasticity of washer $E_washer := \left(29.1 \cdot 10^{6} \cdot psi\right)$ (Ref. MIL-HDBK-5J, table 6.2.1.0(b))

Flanges

Stiffness of the joint depends upon number of members in the grip of the fasteners, Modulus of elasticity of these members, and diameters of the bolt and the washer.

Temperature correction factor for flange 1 $Tf1E := .98$ (modulus) (Ref. MIL-HDBK-5J, fig. 3.7.6.1.4 and Appendix C9)

Temperature correction factor for flange 2 $Tf2E := .98$ (modulus)

$Tf2s := .98$ (strength) (Ref. MIL-HDBK-5J, fig. 3.7.4.2.1)

Shear Strength Allowable for flanges $Fsu_f2 := 44000 \cdot psi$ (Ref. MIL-HDBK-5J, table 3.7.4.0(b1))

Modulus of elasticity for the parts in the joint (Ref. MIL-HDBK-5J, table 3.7.4.0(b1)) $E_flange1 := \left(10.3 \cdot 10^{6} \cdot psi\right)$ $E_flange2 := \left(10.3 \cdot 10^{6} \cdot psi\right)$

Coefficient of thermal expansion for flanges (Ref. MIL-HDBK-5J, table 3.7.4.0(b1) and Appendix C9)

$\alpha_flange1_hot := 12.8 \cdot 10^{-6} \cdot \frac{\frac{in}{in}}{deg}$ $\alpha_flange2_hot := 12.8 \cdot 10^{-6} \cdot \frac{\frac{in}{in}}{deg}$

$\alpha_flange1_cold := 12.1 \cdot 10^{-6} \cdot \frac{\frac{in}{in}}{deg}$ $\alpha_flange2_cold := 12.1 \cdot 10^{-6} \cdot \frac{\frac{in}{in}}{deg}$

Torque/Preload data

Maximum torque (65% of yield) $Tmax := 1032 \cdot in \cdot lbf$

Minimum torque (95% of max. torque) $Tmin := 980 \cdot in \cdot lbf$

Torque coefficient: $k := 0.15$

Loading plane factor: $n := .5$

Preload Uncertainty: $\Gamma := 0.25$

This file uses the calculations shown in \\escfil02\2i11_mathcad\8307_bolts\multi_bolt_stiffness_insert_RevC

Insert Stiffness File

Bolt Load data

Bolt/joint stiffness factor	$\phi = 0.391$	Preload due to temperature	$Pthr_pos = 725.8\ lbf$
Max. preload	$PLDmax = 17925.8\ lbf$		$Pthr_neg = -376.6\ lbf$
Min. preload	$PLDmin = 8563.4\ lbf$	Uncertainty factor	$\Gamma = 0.25$
Joint separation load	$max(Psep) = 5888.489\ lbf$	Torque coefficient	$k = 0.15$
Max. load on the bolt(ultimate)	$max(Pb) = 19468.5\ lbf$	Loading plane factor	$n = 0.5$
Max. load on the bolt(yield)	$max(Pby) = 19137.9\ lbf$	Thread shear pullout load of bolt or insert	$Pths = 43162.3\ lbf$
Bolt ultimate tensile strength	$PAt = 27708.6\ lbf$	Thread shear pullout load in parent metal	$Ppths = 28659.1\ lbf$

Length_check = "Bolt length is sufficient"

Summary of Margins for bolt:

Joint separation	$MS_min_{1,1} = 0.571$	Direct Thread shear Ultimate	$MS_min_{6,1} = 2.628$
Direct Tension Ultimate	$MS_min_{2,1} = 2.507$	Total Thread shear Ultimate	$MS_min_{7,1} = 0.472$
Direct Tension Yield	$MS_min_{3,1} = 2.282$	Shear Ultimate	$MS_min_{8,1} = 74.13$
Total Tension Ultimate	$MS_min_{4,1} = 0.423$	Bending Ultimate	$MS_min_{9,1} = 10$
Total Tension Yield	$MS_min_{5,1} = 0.065$	Combined shear, tension and bending ultimate	$MS_min_{10,1} = 0.423$

Determination of the smallest margin of safety for the bolt, and the failure mode:

$MSbolt := min(MS)$

$MSbolt = 0.065$

Failure_Mode = "Total Tension Yield"

$MS_min_ID = 170601$	Element Identification (1706) and Bolt Number (1) for Minimum Margin
$MS_min_LC = 1016$	Load Case Number for Minimum Margin
$MS_min_P = 4907.1$	Applied Tensile Load for Minimum Margin
$MS_min_V = 65$	Applied Shear Load for Minimum Margin
$MS_min_M = 0$	Applied Bending Moment for Minimum Margin

Bolt Fail-Safe Analysis for Sill Bracket to Sill Joint

Since bolt number 1 has the lowest margin of safety it is assumed that this bolt will be the first bolt to fail. There are now 5, NAS1958C 0.50-20 UNFJ fasteners, holding the sill bracket to the sill joint. The drawing number for the Upper USS-02 Assembly is SDG39135726.

size thread/in

$$bolt2 := \begin{pmatrix} 0.50 & 20 \\ 0.50 & 20 \\ 0.50 & 20 \\ 0.50 & 20 \\ 0.50 & 20 \end{pmatrix}$$

$$s := 1 .. rows(bolt2)$$

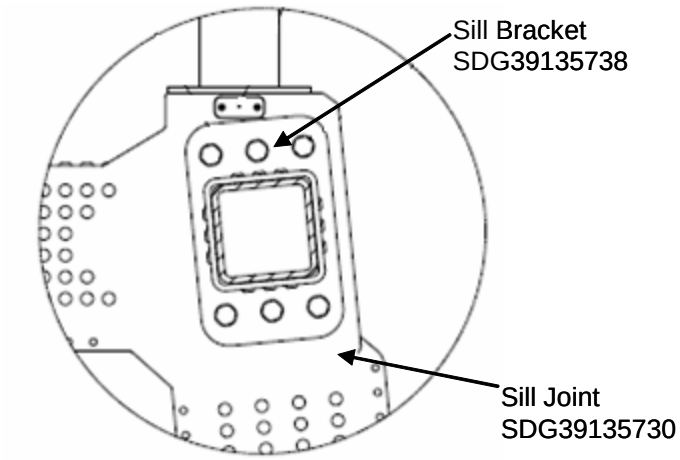

View of Sill Bracket attached to Sill Joint

$N2_s := bolt2_{s,2} \cdot \frac{1}{in}$ pitch of bolt

$D2_s := bolt2_{s,1} \cdot in$ bolt diameter

$$At2_s := \pi \cdot \left(\frac{D2_s - 0.9743 \cdot \frac{1}{N2_s}}{2} \right)^2$$ Tensile Area of bolt

$$As2_s := \pi \cdot \left(\frac{D2_s - 1.299038 \cdot \frac{1}{N2_s}}{2} \right)^2$$ Shear Area of bolt

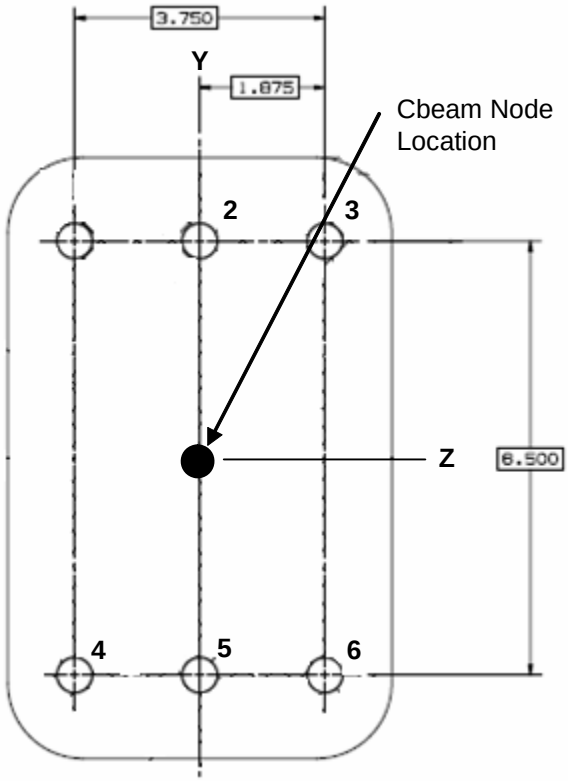

Sill Bracket to Sill Joint Bolt Pattern

Bolt no. x co-ord y co-ord z co-ord

$$\begin{pmatrix} 2 \\ 3 \\ 4 \\ 5 \\ 6 \end{pmatrix} \quad x2 := \begin{pmatrix} 0.0 \\ 0.0 \\ 0.0 \\ 0.0 \\ 0.0 \end{pmatrix} \cdot in \quad y2 := \begin{pmatrix} 3.25 \\ 3.25 \\ -3.25 \\ -3.25 \\ -3.25 \end{pmatrix} \cdot in \quad z2 := \begin{pmatrix} 0.0 \\ 1.875 \\ -1.875 \\ 0.0 \\ 1.875 \end{pmatrix} in$$

Location of applied forces and moments

$xforce2 := 0.0in \qquad yforce2 := 0.0in \qquad zforce2 := 0.0in$

$$cgload2 := \begin{pmatrix} xforce2 \\ yforce2 \\ zforce2 \end{pmatrix} \qquad cgload2 = \begin{pmatrix} 0 \\ 0 \\ 0 \end{pmatrix} in$$

Center of gravity of bolt group

$$xcg2 := \frac{\sum_s x2_s}{rows(x2)} \quad xcg2 = 0\,in \quad ycg2 := \frac{\sum_s y2_s}{rows(y2)} \quad ycg2 = -0.65\,in \quad zcg2 := \frac{\sum_s z2_s}{rows(z2)} \quad zcg2 = 0.375\,in$$

$$cg_{bolt2} := \begin{pmatrix} xcg2 \\ ycg2 \\ zcg2 \end{pmatrix} \qquad cg_{bolt2} = \begin{pmatrix} 0 \\ -0.65 \\ 0.375 \end{pmatrix} in$$

Note: Since the x direction is into the plate the loads are shared equally between the bolts. However, due to a failure in bolt 1, the y and z directions in the bolt pattern are unsymmetric and have offsets from the center of gravity.

Load Vector

$$r_{load2} := cgload2 - cg_{bolt2} \qquad r_{load2} = \begin{pmatrix} 0 \\ 0.65 \\ -0.375 \end{pmatrix} in$$

Distance from CG of Bolts to Individual Bolts for shear calculations

$$r2_s := \sqrt{\left(z2_s - zcg2\right)^2 + \left(y2_s - ycg2\right)^2}$$

$$r2_s = \begin{pmatrix} 3.918 \\ 4.179 \\ 3.438 \\ 2.627 \\ 3.002 \end{pmatrix} in$$

Reading database file for bolted joint, abort landing case

data := READPRN("sillbracket_r2_launch.txt")

$q := 1 .. rows(data)$ $\quad$ $num_bolts2 := rows(bolt2)$

Loads from 2-04 loads model, abort landing case

Axial Load $\quad Fx2_q := data_{q,7} \cdot lbf$

Torsion $\quad Mx2_q := data_{q,8} \cdot in \cdot lbf$

Shear in Y axis $\quad Fy2_q := data_{q,5} \cdot lbf$

Moment about Y axis $\quad My2_q := data_{q,4} \cdot in \cdot lbf$

Shear in Z axis $\quad Fz2_q := data_{q,6} \cdot lbf$

Moment about Z axis $\quad Mz2_q := data_{q,3} \cdot in \cdot lbf$

Element Identification $\quad ID2_q := data_{q,1}$

$ID2_q := ID2_q \cdot 100 + 1$ Counter for number of bolts in pattern

Load Case Number $\quad LC2_q := data_{q,2}$

Applied Bending Moment at Bolts $\quad M2_q := 0 \cdot in \cdot lbf$

Format of Output File

The stack command below is used to stack the element identifications (ID2) and load cases (LC2) in asending order per bolt.See the array example above for explanation. Note: bolt number 1 is not included.

$ID2 := stack(ID2 + 1, ID2 + 2, ID2 + 3, ID2 + 4, ID2 + 5)$

$LC2 := stack(LC2, LC2, LC2, LC2, LC2)$

Moment Distribution

$$M_{tot2}^{\langle q \rangle} := \begin{pmatrix} Mx2_q \\ My2_q \\ Mz2_q \end{pmatrix} + r_{load2} \times \begin{pmatrix} Fx2_q \\ Fy2_q \\ Fz2_q \end{pmatrix}$$

Use the cross-product to determine the additional moments acting on the fasteners.

$Mx_boltcg2_q := M_{tot2_{1,q}}$ $\quad$ $My_boltcg2_q := M_{tot2_{2,q}}$ $\quad$ $Mz_boltcg2_q := M_{tot2_{3,q}}$

Tension on bolts

$$Ftdirect2_{s,q} := \begin{cases} 0 \cdot lbf & \text{if } Fx2_q \le 0lbf \\ \dfrac{Fx2_q}{num_bolts2} & \text{otherwise} \end{cases}$$

Direct tensile load calculation

$$Fmz2_{s,q} := \begin{cases} 0 \cdot lbf & \text{if } \left(y2_s - ycg2\right) = 0 \cdot in \\ \dfrac{\left[Mz_boltcg2_q \cdot \left(y2_s - ycg2\right)\right] At2_s}{\sum_s \left[\left(y2_s - ycg2\right)^2 \cdot At2_s\right]} & \end{cases}$$

$$Fmy2_{s,q} := \begin{cases} 0 \cdot lbf & \text{if } \left(z2_s - zcg2\right) = 0 \cdot in \\ \dfrac{My_boltcg2_q \cdot \left(z2_s - zcg2\right) \cdot At2_s}{\sum_s \left[\left(\left|z2_s - zcg2\right|\right)^2 \cdot At2_s\right]} & \end{cases}$$

$$Ft2_{s,q} := Ftdirect2_{s,q} + Fmz2_{s,q} + Fmy2_{s,q}$$

Total Tensile load

Shear on bolts

Secondary shear on bolts $\quad Fs2_{s,q} := \dfrac{Mx_boltcg2_q \cdot r2_s \cdot As2_s}{\sum_s \left[\left(r2_s\right)^2 \cdot \left(As2_s\right)\right]}$

Direct shear on bolts $\quad Fsd2_{s,q} := \dfrac{\sqrt{\left(Fz2_q\right)^2 + \left(Fy2_q\right)^2}}{num_bolts2}$

Total shear load $\quad Fstot2_{s,q} := Fsd2_{s,q} + Fs2_{s,q}$

The stack commands below are used to stack apllied axial load (P2), applied shear load (V2), and applied moment (M2) in asending order per bolt. These loads are put into an array with the element/bolt number and load case number from above. See the "Output" file below. Notice how there is only 5 bolts, since bolt number 1 is not included.

$$P2 := \text{stack}\left[\left(Ft2^T\right)^{\langle 1\rangle}, \left(Ft2^T\right)^{\langle 2\rangle}, \left(Ft2^T\right)^{\langle 3\rangle}, \left(Ft2^T\right)^{\langle 4\rangle}, \left(Ft2^T\right)^{\langle 5\rangle}\right]$$

$$V2 := \text{stack}\left[\left(Fstot2^T\right)^{\langle 1\rangle}, \left(Fstot2^T\right)^{\langle 2\rangle}, \left(Fstot2^T\right)^{\langle 3\rangle}, \left(Fstot2^T\right)^{\langle 4\rangle}, \left(Fstot2^T\right)^{\langle 5\rangle}\right]$$

$$M2 := \text{stack}(M2, M2, M2, M2, M2)$$

The "Output2" file below outputs an array from left to right starting with the element identification (ID2), Load case number (LC2), applied load on the bolt (P2), applied shear on the bolt (V2), and applied moment on the bolt (M2). See the output array example above. The array is written to a text file.

$$Output2 := \text{augment}\left(ID2, LC2, \frac{P2}{lbf}, \frac{V2}{lbf}, \frac{M2}{in \cdot lbf}\right)$$

(Note: Since the ID2 and LC2 numbers are dimensionless, the P2, V2, and M2 values are divided by their units in order to make the array dimensionless.)

Size of the "Output2" Array: $\text{rows}(Output2) = 640$

(5 bolts x 64 load cases) x 2 joints = 640 load cases

$$\text{WRITEPRN}(\text{"output_forces_sillbracket_r2_launch_fs.txt"}) := Output2$$

Bolt Fail-safe Results

The array from the text file above is read:

$$data_fs := \text{READPRN}(\text{"output_forces_sillbracket_r2_launch_fs.txt"})$$

$$s := 1 .. \text{rows}(data_fs)$$

Fail-safe Analysis, launch

Applied tensile load $P_FS_s := data_fs_{s,3} \cdot lbf$ $ID_FS_s := data_fs_{s,1}$

Applied shear load $V_FS_s := data_fs_{s,4} \cdot lbf$ $LC_FS_s := data_fs_{s,2}$

Applied bending moment $M_FS_s := data_fs_{s,5} \cdot in \cdot lbf$

Fail-safe Factors of Safety

Ultimate $SFu_FS := 1.0$

Joint Separation $SFsep_FS := 1.0$

This file uses the calculations shown in \\escfil02\2i11_mathcad\8307_bolts\ multi_bolt_stiffness_insert_FS_RevC

Fail-Safe Stiffness File

Bolt Fail-safe Load data

Joint separation load $\max(Psep_FS) = 5626.781\ lbf$

Max. load on the bolt(ultimate) $\max(Pb_FS) = 19189.4\ lbf$

Summary of fail-safe Margins for bolt:

Joint separation	$MS_minFS_{1,1} = 0.645$	Total Thread shear Ultimate	$MS_minFS_{5,1} = 0.493$
Direct Tension Ultimate	$MS_minFS_{2,1} = 3.282$	Shear Ultimate	$MS_minFS_{6,1} = 101.25$
Total Tension Ultimate	$MS_minFS_{3,1} = 0.444$	Bending Ultimate	$MS_minFS_{7,1} = 10$
Direct Thread shear Ultimate	$MS_minFS_{4,1} = 3.43$	Combined shear, tension and bending ultimate	$MS_minFS_{8,1} = 0.4440$

Determination of the smallest fail-safe margin of safety for the bolt, and the failure mode:

$MSbolt_FS := \min(MS_FS)$

$MSbolt_FS = 0.444$

Failure_Mode_FS = "Combined Shear Tension Bending Ultimate"

$MS_min_ID = 170604$	Element Identification (1706) and Bolt Number (4) for Minimum Margin
$MS_min_LC = 1004$	Load Case Number for Minimum Margin
$MS_min_P = 5626.8$	Applied Tensile Load for Minimum Margin
$MS_min_V = 67.9$	Applied Shear Load for Minimum Margin
$MS_min_M = 0$	Applied Bending Moment for Minimum Margin

2.4.1.5 Diagonal Sill Bracket to Sill Joint

Prepared By	Name	Date		File Name
	Brent Dyer	09/16/05		Diag_Sill_Brack_r3.mcd
Checked By	John Krejci		**Engineering and Science Contract Group** *Structural Analysis Section*	Drawing No. SDG39135726
Title	Bolts from Diagonal Sill Bracket to Sill Joint			

Diagonal Sill Bracket to Sill Joint Bolt Analysis

The USS-02 assembly consists of two Diagonal Sill Brackets. There are a total of 10 fasteners attaching the Diagonal Sill Bracket to the Sill Joint. The fasteners are EWB0420 (200 ksi), 0.50-20 UNFJ. The drawing number for the Upper USS-02 Assembly is SDG39135726.

size thread/in

$$bolt := \begin{pmatrix} 0.50 & 20 \\ 0.50 & 20 \\ 0.50 & 20 \\ 0.50 & 20 \\ 0.50 & 20 \\ 0.50 & 20 \\ 0.50 & 20 \\ 0.50 & 20 \\ 0.50 & 20 \\ 0.50 & 20 \end{pmatrix}$$

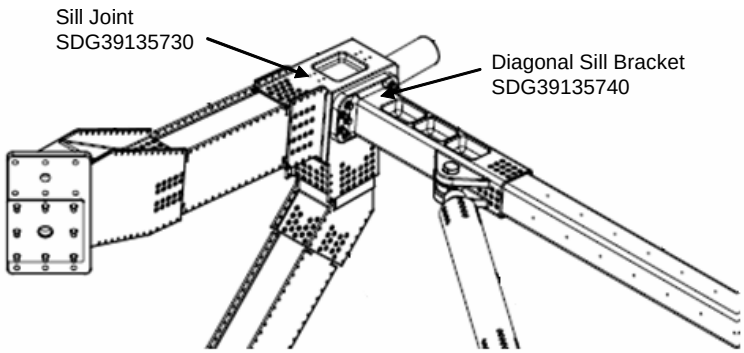

View of Upper USS-02 Assembly SDG39135726

$$i := 1 .. rows(bolt)$$

$$N_i := bolt_{i,2} \cdot \frac{1}{in}$$ pitch of bolt

$$D_i := bolt_{i,1} \cdot in$$ bolt diameter

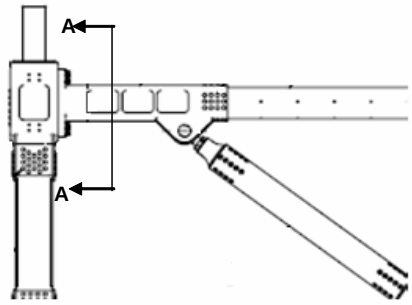

Top View of Upper USS-02 Assembly SDG39135726

$$At_i := \pi \cdot \left(\frac{D_i - 0.9743 \cdot \frac{1}{N_i}}{2} \right)^2$$ Tensile Area of bolt

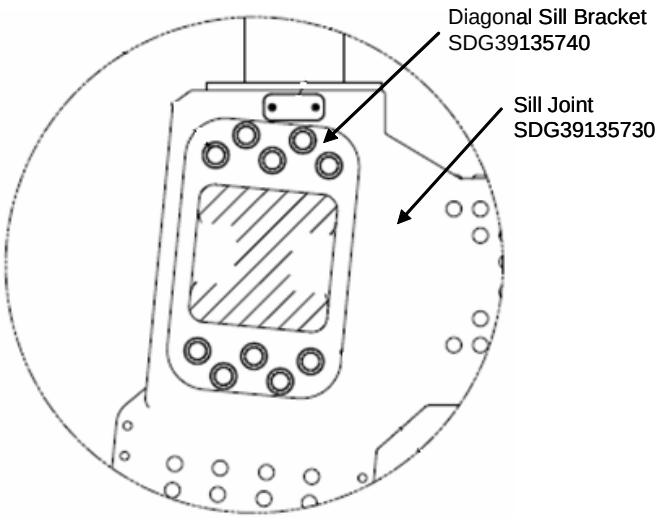

$$As_i := \pi \cdot \left(\frac{D_i - 1.299038 \cdot \frac{1}{N_i}}{2} \right)^2$$ Shear Area of bolt

Cross Section A-A

Prepared By	Name	Date		File Name
	Brent Dyer	09/16/05	Engineering and Science Contract Group	Diag_Sill_Brack_r3.mcd
Checked By	John Krejci		*Structural Analysis Section*	Drawing No. SDG39135726
Title	Bolts from Diagonal Sill Bracket to Sill Joint			

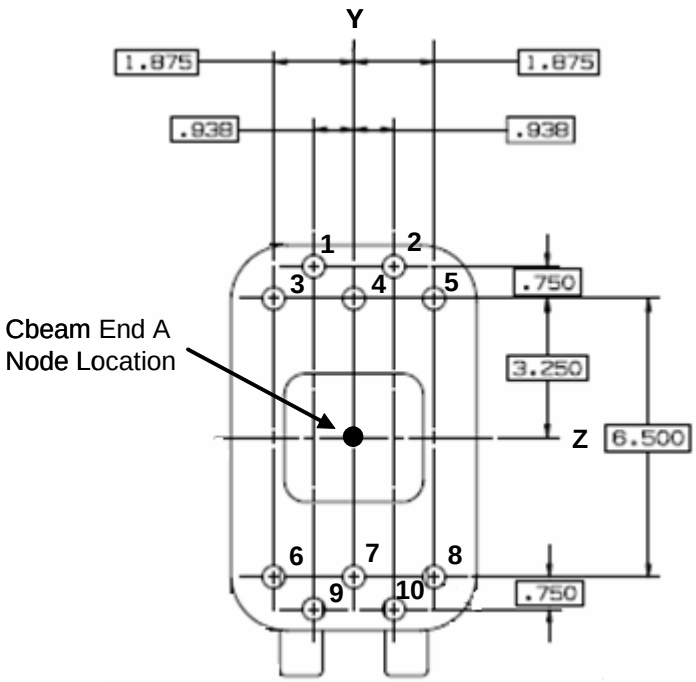

Diagonal Sill Bracket to Sill Joint Bolt Pattern

Bolt no.	x co-ord	y co-ord	z co-ord
1	0.0	4.00	–.9375
2	0.0	4.00	.9375
3	0.0	3.25	–1.875
4	0.0	3.25	0.0
5	0.0	3.25	1.875
6	0.0	–3.25	–1.875
7	0.0	–3.25	0.0
8	0.0	–3.25	1.875
9	0.0	–4.0	–0.9375
10	0.0	–4.0	0.9375

$$x := \begin{pmatrix} 0.0 \\ 0.0 \\ 0.0 \\ 0.0 \\ 0.0 \\ 0.0 \\ 0.0 \\ 0.0 \\ 0.0 \\ 0.0 \end{pmatrix} \cdot in \qquad y := \begin{pmatrix} 4.00 \\ 4.00 \\ 3.25 \\ 3.25 \\ 3.25 \\ -3.25 \\ -3.25 \\ -3.25 \\ -4.0 \\ -4.0 \end{pmatrix} \cdot in \qquad z := \begin{pmatrix} -.9375 \\ .9375 \\ -1.875 \\ 0.0 \\ 1.875 \\ -1.875 \\ 0.0 \\ 1.875 \\ -0.9375 \\ 0.9375 \end{pmatrix} in$$

Location of applied forces and moments

$xforce := 0.0in \qquad yforce := 0.0in \qquad zforce := 0.0in$

$$cgload := \begin{pmatrix} xforce \\ yforce \\ zforce \end{pmatrix} \qquad cgload = \begin{pmatrix} 0 \\ 0 \\ 0 \end{pmatrix} in$$

Center of gravity of bolt group

$$xcg := \frac{\sum_i x_i}{rows(x)} \qquad xcg = 0\,in \qquad ycg := \frac{\sum_i y_i}{rows(y)} \qquad ycg = 0\,in \qquad zcg := \frac{\sum_i z_i}{rows(z)} \qquad zcg = 0\,in$$

$$cg_{bolt} := \begin{pmatrix} xcg \\ ycg \\ zcg \end{pmatrix} \qquad cg_{bolt} = \begin{pmatrix} 0 \\ 0 \\ 0 \end{pmatrix} in$$

Note: Since the x direction is into the plate the loads are shared equally between the bolts. The bolt pattern is symmetric about the y-axis and z-axis with a zero offset from the center of gravity.

Load Vector

$$r_{load} := cgload - cg_{bolt} \qquad r_{load} = \begin{pmatrix} 0 \\ 0 \\ 0 \end{pmatrix} in$$

Distance from CG of Bolts to Individual Bolts for shear calculations

$$r_i := \sqrt{\left(z_i - zcg\right)^2 + \left(y_i - ycg\right)^2} \qquad r = \begin{pmatrix} 4.108 \\ 4.108 \\ 3.752 \\ 3.250 \\ 3.752 \\ 3.752 \\ 3.250 \\ 3.752 \\ 4.108 \\ 4.108 \end{pmatrix} in$$

Loads model 2-04 was used to retrieve loads at the two bolted interfaces. A Cbeam element located at the center of each diagonal sill bracket was post processed in NASPOST for end A forces and moments in the x, y, and z directions. The Cbeam element identifications for the two bolted interfaces are 1722 and 1721. These loads are read into an array and distributed out to the 10 bolts for each interface plate.

(Note: This joint was checked for minimum margins of safety for launch, nominal landing, and abort landing load cases. The launch cases combined with launch temperature data resulted in the lowest minimum margins of safety. Therefore, the launch cases are used in this analysis.)

Reading database file for bolted joint, launch case

data := READPRN("diagsillforces_r2_launch.txt")

j := 1 .. rows(data)

num_bolts := rows(bolt)

Loads from 2-04 loads model, launch case (Note: These loads are taken from end A of the Cbeam element)

Axial Load $Fx_j := data_{j,7} \cdot lbf$

Shear in Y axis $Fy_j := data_{j,5} \cdot lbf$

Shear in Z axis $Fz_j := data_{j,6} \cdot lbf$

Torsion $Mx_j := data_{j,8} \cdot in \cdot lbf$

Moment about Y axis $My_j := data_{j,4} \cdot in \cdot lbf$

Moment about Z axis $Mz_j := data_{j,3} \cdot in \cdot lbf$

Element Identification $ID_j := data_{j,1}$

$ID_j := ID_j \cdot 1000 + 1$ Counter for number of bolts in pattern

Load Case Number $LC_j := data_{j,2}$

Applied Bending Moment at Bolts $M_j := 0 \cdot in \cdot lbf$

Format of Output File

The stack commands below are used to stack the element identifications (ID) and load cases (LC) in ascending order per bolt. The element ID number is located in the first column and the LC numbers in the second column. For each element identification, 1722 and 1721, the bolt number within the bolt pattern is added to the end of each element identification. For example, the element identification number 1722 will have bolt numbers 1 thru 10 attached to the end for all 64 load cases. This brings the total number of load cases to 1280 (2 joints x 10 bolts x 64 load cases = 1280). See the array example to the right.

$$ID := stack(ID, ID+1, ID+2, ID+3, ID+4, ID+5, ID+6, ID+7, ID+8, ID+9)$$

$$LC := stack(LC, LC, LC, LC, LC, LC, LC, LC, LC, LC)$$

$$\begin{array}{cc} ID & LC \\ \end{array}$$
$$\begin{bmatrix} 1722001 & 1001 \\ 1722001 & 1002 \\ \dots & \dots \\ 1722001 & 1064 \\ 1722002 & 1001 \\ 1722002 & 1002 \\ \dots & \dots \\ 1722002 & 1064 \\ \dots & \dots \\ \dots & \dots \\ 1722010 & 1001 \\ 1722010 & 1002 \\ \dots & \dots \\ 1722010 & 1064 \end{bmatrix}$$

Array Example

Moment Distribution

$$M_{tot}^{\langle j \rangle} := \begin{pmatrix} Mx_j \\ My_j \\ Mz_j \end{pmatrix} + r_{load} \times \begin{pmatrix} Fx_j \\ Fy_j \\ Fz_j \end{pmatrix}$$

Use the cross-product to determine the additional moments acting on the fasteners.

$Mx_boltcg_j := M_{tot_{1,j}}$ $\quad$ $My_boltcg_j := M_{tot_{2,j}}$ $\quad$ $Mz_boltcg_j := M_{tot_{3,j}}$

Tension on bolts

$$Ftdirect_{i,j} := \begin{cases} 0 \cdot lbf & \text{if } Fx_j \le 0lbf \\ \dfrac{Fx_j}{num_bolts} & \text{otherwise} \end{cases}$$

Direct tensile load calculation - (The if statement checks for compression)

$$Fmz_{i,j} := \begin{cases} 0 \cdot lbf & \text{if } (y_i - ycg) = 0 \cdot in \\ \dfrac{\left[Mz_boltcg_j \cdot (y_i - ycg)\right] At_i}{\sum_i \left[(y_i - ycg)^2 \cdot At_i\right]} & \end{cases}$$

$$Fmy_{i,j} := \begin{cases} 0 \cdot lbf & \text{if } (z_i - zcg) = 0 \cdot in \\ \dfrac{My_boltcg_j \cdot (z_i - zcg) \cdot At_i}{\sum_i \left[\left(\left|z_i - zcg\right|\right)^2 \cdot At_i\right]} & \end{cases}$$

$$Ft_{i,j} := Ftdirect_{i,j} + Fmz_{i,j} + Fmy_{i,j}$$

Total Tensile load

Shear on bolts

Secondary shear on bolts $\quad Fs_{i,j} := \dfrac{Mx_boltcg_j \cdot r_i \cdot As_i}{\sum_i \left[(r_i)^2 \cdot (As_i)\right]}$

Direct shear on bolts $\quad Fsd_{i,j} := \dfrac{\sqrt{(Fz_j)^2 + (Fy_j)^2}}{num_bolts}$

Total shear load $\quad Fstot_{i,j} := Fsd_{i,j} + Fs_{i,j}$

The stack commands below are used to stack applied axial load (P), applied shear load (V), and applied moment (M) in ascending order per bolt. These loads are put into an array with the element/bolt number and load case number from above. See the "Output" file below.

$$P := \text{stack}\left[\left(Ft^T\right)^{\langle 1\rangle}, \left(Ft^T\right)^{\langle 2\rangle}, \left(Ft^T\right)^{\langle 3\rangle}, \left(Ft^T\right)^{\langle 4\rangle}, \left(Ft^T\right)^{\langle 5\rangle}, \left(Ft^T\right)^{\langle 6\rangle}, \left(Ft^T\right)^{\langle 7\rangle}, \left(Ft^T\right)^{\langle 8\rangle}, \left(Ft^T\right)^{\langle 9\rangle}, \left(Ft^T\right)^{\langle 10\rangle}\right]$$

$$V := \text{stack}\left[\left(Fstot^T\right)^{\langle 1\rangle}, \left(Fstot^T\right)^{\langle 2\rangle}, \left(Fstot^T\right)^{\langle 3\rangle}, \left(Fstot^T\right)^{\langle 4\rangle}, \left(Fstot^T\right)^{\langle 5\rangle}, \left(Fstot^T\right)^{\langle 6\rangle}\right]$$

$$V := \text{stack}\left[V, \left(Fstot^T\right)^{\langle 7\rangle}, \left(Fstot^T\right)^{\langle 8\rangle}, \left(Fstot^T\right)^{\langle 9\rangle}, \left(Fstot^T\right)^{\langle 10\rangle}\right] \qquad M := \text{stack}(M, M, M, M, M, M, M, M, M, M)$$

The "Output" file below outputs an array from left to right starting with the element identification (ID), Load case number (LC), applied load on the bolt (P), applied shear on the bolt (V), and applied moment on the bolt (M). See the output array example below. The array is then written to a text file.

$$\text{Output} := \text{augment}\left(ID, LC, \frac{P}{lbf}, \frac{V}{lbf}, \frac{M}{in \cdot lbf}\right)$$

(Note: Since the ID and LC numbers are dimensionless, the P, V, and M values are divided by their units in order to make the array dimensionless.)

$$\begin{array}{ccccc} ID & LC & P & V & M \end{array}$$

$$\begin{bmatrix} 1722001 & 1001 & -1068.05 & -358.78 & 0 \\ 1722001 & 1002 & -1110.33 & -465.51 & 0 \\ \ldots & \ldots & \ldots & \ldots & \ldots \\ 1722001 & 1064 & -699.99 & -439.08 & 0 \\ 1722002 & 1001 & -813.60 & -263.63 & 0 \\ 1722002 & 1002 & -977.16 & -342.06 & 0 \\ \ldots & \ldots & \ldots & \ldots & \ldots \\ 1722002 & 1064 & -658.71 & -322.63 & 0 \\ \ldots & \ldots & \ldots & \ldots & \ldots \\ \ldots & \ldots & \ldots & \ldots & \ldots \\ 1722010 & 1001 & 1470.8 & -358.78 & 0 \\ 1722010 & 1002 & 1166.08 & -465.51 & 0 \\ \ldots & \ldots & \ldots & \ldots & \ldots \\ 1722010 & 1064 & 699.99 & -439.07 & 0 \end{bmatrix}$$

Size of the "Output" Array: $\text{rows}(\text{Output}) = 1280$

(10 bolts x 64 load cases) x 2 joints = 1280 load cases

(Note: The output array to the left is an example of the array format. The loads in this example are for format purposes only and should NOT be used in this analysis.)

Example of Output Array

$\text{WRITEPRN}(\text{"output_forces_diagsillbrack_r2_launch.txt"}) := \text{Output}$

Prepared By	Name	Date	Engineering and Science Contract Group	File Name
	Brent Dyer	09/16/05		Diag_Sill_Brack_r3.mcd
Checked By	John Krejci		*Structural Analysis Section*	Drawing No. SDG39135726
Title	Bolts from Diagonal Sill Bracket to Sill Joint			

CHECK BOLTS (bolts SDG39135892-813, EWB 0420-8-16 0.50-20UNJF-3A, Material-A-286), Insert MS51832CA206, Washer NAS1587-8C

data := READPRN("output_forces_diagsillbrack_r2_launch.txt")

s := 1 .. rows(data)

Flange 1: Diagonal Sill Bracket
Part number:SDG39135740
Material: 7050-T7451

Flange 2: Sill Joint
Part number: SDG39135730
Material: 7050-T7451

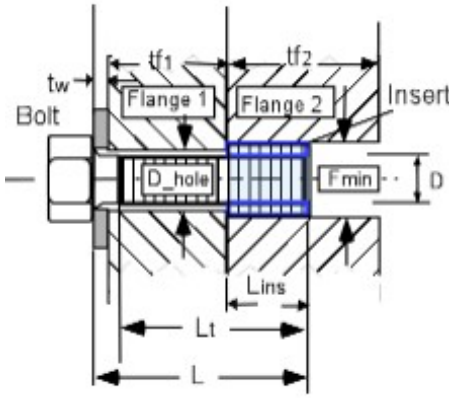

Loads

Applied tensile load $P_s := data_{s,3} \cdot lbf$

Applied shear load $V_s := data_{s,4} \cdot lbf$

Applied bending moment $M_s := data_{s,5} \cdot in \cdot lbf$

Element Identification $ID_s := data_{s,1}$

Load Case Number $LC_s := data_{s,2}$

Temperature Data (Ref Appendix C2), Launch Case

Assembly $Temp_initial := 70 \cdot deg$

Maximum $Temp_max := 120 \cdot deg$

Minimum $Temp_min := 40 \cdot deg$

Factors of Safety

Ultimate $SFu := 1.4$

Yield $SFy := 1.1$

Joint Separation $SFsep := 1.2$

Fitting factor $FF := 1.15$

Bolt and Insert Data

Nominal diameter of bolt $D := 0.500 \cdot in$

Number of threads/inch $Nt := 20 \cdot \frac{1}{in}$

Total length of bolt $L := 1.838 \cdot in$

Length of insert $Lins := 0.688 \cdot in$

Threaded length $Lt := 0.838 \cdot in$

Min. external diameter of insert $Fmin := 0.744 \cdot in$

(If bolt is fully threaded, input Lt = L)

Depth of recess for insert $lr := 0.02 \cdot in$

This file uses the calculations shown in \\escfil02\2i11_mathcad\8307_bolts\thread_data.mcd

Thread Data File

Prepared By	Name	Date		File Name
	Brent Dyer	09/16/05	Engineering and Science Contract Group	Diag_Sill_Brack_r3.mcd
Checked By	John Krejci		*Structural Analysis Section*	Drawing No. SDG39135726
Title	Bolts from Diagonal Sill Bracket to Sill Joint			

Washer Data

Thickness of washer $tw := 0.078 \cdot in$

Outer Diameter of washer $Dw := .875in$

Inner Diameter of washer $Dwi := 0.515 \cdot in$

Bolt head dia. across flats (used only if there is no washer) $dw := 0.818 \cdot in$

Flange data

Thickness of flange 1 (Ref. SDG39135740) $tf1 := 1.0 \cdot in$

Thickness of flange 2 (Ref. SDG39135730) $tf2 := .688in$ (Insert Length)

Diameter of hole $D_hole := 0.539 \cdot in$

Note: If there is no washer, tw, Dw, and Dwi should be zero.

Material Property Data

Bolt

Temperature correction factor for bolt strength ultimate (Ref. MIL-HDBK-5J, fig. 6.2.1.1.1) $TSu_bolt := .97$ yield $TSy_bolt := .97$

Bolt ultimate tensile allowable stress $Ftu_bolt := 200000 \cdot psi$

Bolt ultimate shear allowable stress $Fsu_bolt := 0.6 \cdot Ftu_bolt$

Bolt yield tensile allowable $Fty_bolt := 180000 \cdot psi$

Temperature correction factor for bolt modulus $TE_bolt := .98$ (Ref. MIL-HDBK-5J, fig. 6.2.1.1.4(a))

Modulus of elasticity of bolt $E_bolt := \left(29.1 \cdot 10^{6} \cdot psi\right)$ (Ref. MIL-HDBK-5J, table 6.2.1.0(b))

Thermal coefficient for bolt: $\alpha_bolt_hot := 9.1 \cdot 10^{-6} \cdot \frac{\frac{in}{in}}{deg}$ $\alpha_bolt_cold := 8.9 \cdot 10^{-6} \cdot \frac{\frac{in}{in}}{deg}$

(Ref. MIL-HDBK-5J, fig. 6.2.1.0)

Insert

Temperature correction factor for insert strength $TS_ins := .97$ (Ref. MIL-HDBK-5J, fig. 6.2.1.1.1)

Ultimate tensile allowable stress $Ftu_ins := 140000 \cdot psi$ (Ref. MS51831)

Ultimate shear allowable stress $Fsu_ins := 0.6 \cdot Ftu_ins$

Washer

Temperature correction factor for washer modulus $TE_washer := .97$ (Ref. MIL-HDBK-5J, fig. 6.2.1.1.1)

Modulus of elasticity of washer $E_washer := \left(29.1 \cdot 10^{6} \cdot psi\right)$ (Ref. MIL-HDBK-5J, table 6.2.1.0(b))

Flanges

Stiffness of the joint depends upon number of members in the grip of the fasteners, Modulus of elasticity of these members, and diameters of the bolt and the washer.

Temperature correction factor for flange 1 $Tf1E := .97$ (modulus) (Ref. MIL-HDBK-5J, fig. 3.7.6.1.4 and Appendix C9)

Temperature correction factor for flange 2 $Tf2E := .97$ (modulus)

$Tf2s := .97$ (strength) (Ref. MIL-HDBK-5J, fig. 3.7.4.2.1)

Shear Strength Allowable for flanges $Fsu_f2 := 44000 \cdot psi$ (Ref. MIL-HDBK-5J, table 3.7.4.0(b1))

Modulus of elasticity for the parts in the joint (Ref. MIL-HDBK-5J, table 3.7.4.0(b1))

$E_flange1 := \left(10.3 \cdot 10^{6} \cdot psi\right)$ $E_flange2 := \left(10.3 \cdot 10^{6} \cdot psi\right)$

Coefficient of thermal expansion for flanges (Ref. MIL-HDBK-5J, table 3.7.4.0(b1) and Appendix C9)

$\alpha_flange1_hot := 12.8 \cdot 10^{-6} \cdot \frac{\frac{in}{in}}{deg}$ $\alpha_flange2_hot := 12.8 \cdot 10^{-6} \cdot \frac{\frac{in}{in}}{deg}$

$\alpha_flange1_cold := 12.1 \cdot 10^{-6} \cdot \frac{\frac{in}{in}}{deg}$ $\alpha_flange2_cold := 12.1 \cdot 10^{-6} \cdot \frac{\frac{in}{in}}{deg}$

Torque/Preload data

Maximum torque (65% of yield) $Tmax := 1403.1 \cdot in \cdot lbf$

Minimum torque (95% of max. torque) $Tmin := 1333 \cdot in \cdot lbf$

Loading plane factor: $n := .5$

Preload Uncertainty: $\Gamma := 0.25$

Torque coefficient: $k := 0.15$

This file uses the calculations shown in \\escfil02\2i11_mathcad\8307_bolts\multi_bolt_stiffness_insert_RevC

Insert Stiffness File

Bolt Load data

Bolt/joint stiffness factor	$\phi = 0.370$	Preload due to temperature	$Pthr_pos = 718.5\ lbf$
Max. preload	$PLDmax = 24103.5\ lbf$		$Pthr_neg = -372.9\ lbf$
Min. preload	$PLDmin = 11787.9\ lbf$	Uncertainty factor	$\Gamma = 0.25$
Joint separation load	$max(Psep) = 14914.308\ lbf$	Torque coefficient	$k = 0.15$
Max. load on the bolt(ultimate)	$max(Pb) = 27800.6\ lbf$	Loading plane factor	$n = 0.5$
Max. load on the bolt(yield)	$max(Pby) = 27008.4\ lbf$	Thread shear pullout load of bolt or insert	$Pths = 44277.6\ lbf$
Bolt ultimate tensile strength	$PAt = 30473.2\ lbf$	Thread shear pullout load in parent metal	$Ppths = 34316.7\ lbf$

$Length_check = \text{"Bolt length is sufficient"}$

Summary of Margins for bolt:

Joint separation	$MS_min_{1,1} = -0.157$	Direct Thread shear Ultimate	$MS_min_{6,1} = 0.715$
Direct Tension Ultimate	$MS_min_{2,1} = 0.523$	Total Thread shear Ultimate	$MS_min_{7,1} = 0.234$
Direct Tension Yield	$MS_min_{3,1} = 0.744$	Shear Ultimate	$MS_min_{8,1} = 4.27$
Total Tension Ultimate	$MS_min_{4,1} = 0.096$	Bending Ultimate	$MS_min_{9,1} = 10$
Total Tension Yield	$MS_min_{5,1} = 0.015$	Combined shear, tension and bending ultimate	$MS_min_{10,1} = 0.091$

Determination of the smallest margin of safety for the bolt, and the failure mode:

$MSbolt := min(MS)$

$MSbolt = -0.157$	Minimum Margin of Safety (Note: See Minimum Margin of Safety Summary below.)
$Failure_Mode = \text{"Joint Separation"}$	
$MS_min_ID = 1721009$	Element Identification (1721) and Bolt Number (9) for Minimum Margin
$MS_min_LC = 1032$	Load Case Number for Minimum Margin
$MS_min_P = 12428.6$	Applied Tensile Load for Minimum Margin
$MS_min_V = 2029.9$	Applied Shear Load for Minimum Margin
$MS_min_M = 0$	Applied Bending Moment for Minimum Margin

Prepared By	Name	Date		File Name
	Brent Dyer	09/16/05		Diag_Sill_Brack_r3.mcd
Checked By	John Krejci		**Engineering and Science Contract Group** *Structural Analysis Section*	Drawing No. SDG39135726
Title	Bolts from Diagonal Sill Bracket to Sill Joint			

Minimum Margin of Safety Summary:

Although the minimum margin of safety is negative for joint separation, all other margins of safety are positive. Even though two out of 10 bolts result in negative margins of safety on joint separation across 13 load cases, the joint flanges do not separate.

Bolts 6 and 9, in joint 1721, have negative margins of safety on joint separation for 12 load cases. Negative margins of safety on joint separation occurs at the same time for bolts 6 and 9. Negative margins of safety on joint separation occurs 4 times for bolt 9 only. See table below. For liftoff and landing, the fatigue spectrum (ref NASGRO manual for Goddard spectrum) for these fasteners shows that bolts 6 and 9 incur only 14 cycles above which the fastener experiences 80% of applied axial load. At 84% of applied axial load, analysis shows these fasteners have positive margins of safety against joint separation.

Bolts 1 and 3, in joint 1722, have negative margins of safety on joint separation for 2 load cases. Negative margins of safety on joint separation occurs at the same time for bolts 1 and 3. Negative margins of safety on joint separation occurs 6 times for bolt 1 only. See table below. For liftoff and landing, the fatigue spectrum (ref NASGRO manual for Goddard spectrum) for these fasteners shows that bolts 1 and 3 incur only 6 cycles above which the fastener experiences 90% of applied axial load. At 92% of applied axial load, analysis shows these fasteners have positive margins of safety against joint separation.

Joint 1721, bolt numbers 6 and 9 result in joint separation in 12 load cases

Bolt ID	Load Case	M.S. for Joint Seperation
1721009 1721006	1032	-0.157 -0.145
1721009 1721006	1031	-0.058 -0.048
1721009 1721006	1030	-0.12 -0.088
1721009	1029	-0.026
1721009 1721006	1028	-0.141 -0.126
1721009 1721006	1027	-0.056 -0.042
1721009 1721006	1026	-0.117 -0.08
1721009	1025	-0.02
1721009 1721006	1024	-0.142 -0.121
1721009 1721006	1023	-0.044 -0.025
1721009 1721006	1022	-0.106 -0.064
1721009	1021	-0.01
1721009 1721006	1020	-0.134 -0.11
1721009 1721006	1019	-0.043 -0.018
1721009 1721006	1018	-0.113 -0.067
1721009	1017	-0.02

Joint 1722, bolt numbers 1 and 3 result in joint separation in 1 load case

Bolt ID	Load Case	M.S. for Joint Seperation
1722003 1722001	1015	-0.012 -0.075
1722001	1013	-0.027
1722003 1722001	1011	-0.019 -0.077
1722001	1009	-0.031
1722001	1007	-0.059
1722001	1005	-0.021
1722001	1003	-0.065
1722001	1001	-0.031

Goddard Spectrum

Cycles	S0	S1
2	-100	100
4	-90	90
8	-80	80
15	-70	70
49	-60	60
81	-50	50
178	-40	40
641	-30	30
3120	-20	20
3405	-10	10
5019	-7	7
28853	-5	5
91655	-3	3

Bolt Fail-Safe Analysis for Diagonal Sill Bracket to Sill Joint

Since bolt number 9 has the lowest margin of safety it is assumed that this bolt will be the first bolt to fail. There are now 9, EWB0420 0.50-20 UNFJ fasteners, holding the Diagonal Sill Bracket to Sill Joint. The drawing number for the USS-02 Assembly is SDG39135726.

size thread/in

$$bolt2 := \begin{pmatrix} 0.50 & 20 \\ 0.50 & 20 \\ 0.50 & 20 \\ 0.50 & 20 \\ 0.50 & 20 \\ 0.50 & 20 \\ 0.50 & 20 \\ 0.50 & 20 \\ 0.50 & 20 \end{pmatrix}$$

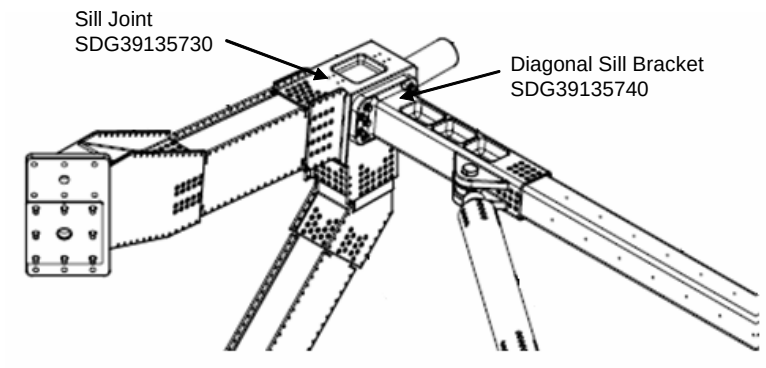

View of Upper USS-02 Assembly SDG39135726

$s := 1 .. rows(bolt2)$

$N2_s := bolt2_{s,2} \cdot \frac{1}{in}$ pitch of bolt

$D2_s := bolt2_{s,1} \cdot in$ bolt diameter

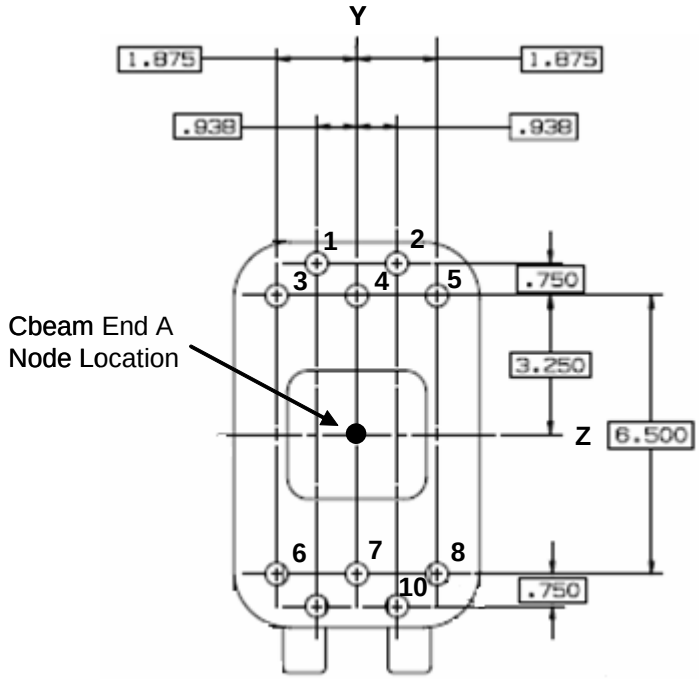

Diagonal Sill Bracket to Sill Joint Bolt Pattern for Fail-Safe Analysis

$$At2_s := \pi \cdot \left(\frac{D2_s - 0.9743 \cdot \frac{1}{N2_s}}{2} \right)^2$$ Tensile Area of bolt

$$As2_s := \pi \cdot \left(\frac{D2_s - 1.299038 \cdot \frac{1}{N2_s}}{2} \right)^2$$ Shear Area of bolt

Prepared By	Name	Date		File Name
	Brent Dyer	09/16/05	Engineering and Science Contract Group	Diag_Sill_Brack_r3.mcd
Checked By	John Krejci		*Structural Analysis Section*	Drawing No. SDG39135726
Title	Bolts from Diagonal Sill Bracket to Sill Joint			

Bolt no.	x co-ord	y co-ord	z co-ord
1	0.0	4.0	–.9375
2	0.0	4.0	.9375
3	0.0	3.25	–1.875
4	0.0	3.25	0.0
5	0.0	3.25	1.875
6	0.0	–3.25	–1.875
7	0.0	–3.25	0.0
8	0.0	–3.25	1.875
10	0.0	–4.0	.9375

$$x2 := \begin{pmatrix} 0.0 \\ 0.0 \\ 0.0 \\ 0.0 \\ 0.0 \\ 0.0 \\ 0.0 \\ 0.0 \\ 0.0 \end{pmatrix} \cdot in \qquad y2 := \begin{pmatrix} 4.0 \\ 4.0 \\ 3.25 \\ 3.25 \\ 3.25 \\ -3.25 \\ -3.25 \\ -3.25 \\ -4.0 \end{pmatrix} \cdot in \qquad z2 := \begin{pmatrix} -.9375 \\ .9375 \\ -1.875 \\ 0.0 \\ 1.875 \\ -1.875 \\ 0.0 \\ 1.875 \\ .9375 \end{pmatrix} \cdot in$$

Location of applied forces and moments

$xforce2 := 0.0in \qquad yforce2 := 0.0in \qquad zforce2 := 0.0in$

$$cgload2 := \begin{pmatrix} xforce2 \\ yforce2 \\ zforce2 \end{pmatrix} \qquad cgload2 = \begin{pmatrix} 0 \\ 0 \\ 0 \end{pmatrix} in$$

Center of gravity of bolt group

$$xcg2 := \frac{\sum_s x2_s}{rows(x2)} \qquad xcg2 = 0\,in \qquad ycg2 := \frac{\sum_s y2_s}{rows(y2)} \qquad ycg2 = 0.444\,in \qquad zcg2 := \frac{\sum_s z2_s}{rows(z2)} \qquad zcg2 = 0.104\,in$$

$$cg_{bolt2} := \begin{pmatrix} xcg2 \\ ycg2 \\ zcg2 \end{pmatrix} \qquad cg_{bolt2} = \begin{pmatrix} 0 \\ 0.444 \\ 0.104 \end{pmatrix} in$$

Note: Since the x direction is into the plate the loads are shared equally between the bolts. However, due to a failure in bolt 9, the y and z directions in the bolt pattern are unsymmetric and have offsets from the center of gravity.

Load Vector

$$r_{load2} := cgload2 - cg_{bolt2} \qquad r_{load2} = \begin{pmatrix} 0 \\ -0.444 \\ -0.104 \end{pmatrix} in$$

Distance from CG of Bolts to Individual Bolts for shear calculations

$$r2_s := \sqrt{\left(z2_s - zcg2\right)^2 + \left(y2_s - ycg2\right)^2}$$

$$r2_s = \begin{pmatrix} 3.705 \\ 3.652 \\ 3.433 \\ 2.807 \\ 3.318 \\ 4.191 \\ 3.696 \\ 4.097 \\ 4.522 \end{pmatrix} in$$

Reading database file for bolted joint, launch case

$data := READPRN("diagsillforces_r2_launch.txt")$

$q := 1 .. rows(data)$ $\quad num_bolts2 := rows(bolt2)$

Loads from 2-04 loads model, launch case

Axial Load $\quad Fx2_q := data_{q,7} \cdot lbf$

Shear in Y axis $\quad Fy2_q := data_{q,5} \cdot lbf$

Shear in Z axis $\quad Fz2_q := data_{q,6} \cdot lbf$

Element Identification $\quad ID2_q := data_{q,1}$

Load Case Number $\quad LC2_q := data_{q,2}$

Torsion $\quad Mx2_q := data_{q,8} \cdot in \cdot lbf$

Moment about Y axis $\quad My2_q := data_{q,4} \cdot in \cdot lbf$

Moment about Z axis $\quad Mz2_q := data_{q,3} \cdot in \cdot lbf$

$ID2_q := ID2_q \cdot 1000 + 1$ Counter for number of bolts in pattern

Applied Bending Moment at Bolts $\quad M2_q := 0 \cdot in \cdot lbf$

Format of Output File

The stack command below is used to stack the element identifications (ID2) and load cases (LC2) in ascending order per bolt.See the array example above for explanation. Note: bolt number 9 is not included.

$ID2 := stack(ID2, ID2 + 1, ID2 + 2, ID2 + 3, ID2 + 4, ID2 + 5, ID2 + 6, ID2 + 7, ID2 + 9)$

$LC2 := stack(LC2, LC2, LC2, LC2, LC2, LC2, LC2, LC2, LC2)$

Moment Distribution

$$M_{tot2}^{\langle q \rangle} := \begin{pmatrix} Mx2_q \\ My2_q \\ Mz2_q \end{pmatrix} + r_{load2} \times \begin{pmatrix} Fx2_q \\ Fy2_q \\ Fz2_q \end{pmatrix}$$

Use the cross-product to determine the additional moments acting on the fasteners.

$Mx_boltcg2_q := M_{tot2_{1,q}}$ $\quad$ $My_boltcg2_q := M_{tot2_{2,q}}$ $\quad$ $Mz_boltcg2_q := M_{tot2_{3,q}}$

Tension on bolts

$$Ftdirect2_{s,q} := \begin{cases} 0 \cdot lbf & \text{if } Fx2_q \le 0lbf \\ \dfrac{Fx2_q}{num_bolts2} & \text{otherwise} \end{cases}$$

Direct tensile load calculation

$$Fmz2_{s,q} := \begin{cases} 0 \cdot lbf & \text{if } \left(y2_s - ycg2\right) = 0 \cdot in \\ \dfrac{\left[Mz_boltcg2_q \cdot \left(y2_s - ycg2\right)\right] At2_s}{\sum_s \left[\left(y2_s - ycg2\right)^2 \cdot At2_s\right]} & \text{otherwise} \end{cases}$$

$$Fmy2_{s,q} := \begin{cases} 0 \cdot lbf & \text{if } \left(z2_s - zcg2\right) = 0 \cdot in \\ \dfrac{My_boltcg2_q \cdot \left(z2_s - zcg2\right) \cdot At2_s}{\sum_s \left[\left(\left|z2_s - zcg2\right|\right)^2 \cdot At2_s\right]} & \text{otherwise} \end{cases}$$

$$Ft2_{s,q} := Ftdirect2_{s,q} + Fmz2_{s,q} + Fmy2_{s,q}$$

Total Tensile load

Shear on bolts

Secondary shear on bolts $\quad Fs2_{s,q} := \dfrac{Mx_boltcg2_q \cdot r2_s \cdot As2_s}{\sum_s \left[\left(r2_s\right)^2 \cdot \left(As2_s\right)\right]}$

Direct shear on bolts $\quad Fsd2_{s,q} := \dfrac{\sqrt{\left(Fz2_q\right)^2 + \left(Fy2_q\right)^2}}{num_bolts2}$

Total shear load $\quad Fstot2_{s,q} := Fsd2_{s,q} + Fs2_{s,q}$

The stack commands below are used to stack applied axial load (P2), applied shear load (V2), and applied moment (M2) in ascending order per bolt. These loads are put into an array with the element/bolt number and load case number from above. See the "Output2" file below. Notice how there is only 9 bolts, since bolt number 9 is not included.

$$P2 := \text{stack}\left[\left(Ft2^T\right)^{\langle 1\rangle}, \left(Ft2^T\right)^{\langle 2\rangle}, \left(Ft2^T\right)^{\langle 3\rangle}, \left(Ft2^T\right)^{\langle 4\rangle}, \left(Ft2^T\right)^{\langle 5\rangle}, \left(Ft2^T\right)^{\langle 6\rangle}, \left(Ft2^T\right)^{\langle 7\rangle}, \left(Ft2^T\right)^{\langle 8\rangle}, \left(Ft2^T\right)^{\langle 9\rangle}\right]$$

$$V2 := \text{stack}\left[\left(Fstot2^T\right)^{\langle 1\rangle}, \left(Fstot2^T\right)^{\langle 2\rangle}, \left(Fstot2^T\right)^{\langle 3\rangle}, \left(Fstot2^T\right)^{\langle 4\rangle}, \left(Fstot2^T\right)^{\langle 5\rangle}, \left(Fstot2^T\right)^{\langle 6\rangle}\right]$$

$$V2 := \text{stack}\left[V2, \left(Fstot2^T\right)^{\langle 7\rangle}, \left(Fstot2^T\right)^{\langle 8\rangle}, \left(Fstot2^T\right)^{\langle 9\rangle}\right]$$

$$M2 := \text{stack}(M2, M2, M2, M2, M2, M2, M2, M2, M2)$$

The "Output2" file below outputs an array from left to right starting with the element identification (ID2), Load case number (LC2), applied load on the bolt (P2), applied shear on the bolt (V2), and applied moment on the bolt (M2). See the output array example above. The array is written to a text file.

$$Output2 := \text{augment}\left(ID2, LC2, \frac{P2}{lbf}, \frac{V2}{lbf}, \frac{M2}{in \cdot lbf}\right)$$

(Note: Since the ID2 and LC2 numbers are dimensionless, the P2, V2, and M2 values are divided by their units in order to make the array dimensionless.)

Size of the "Output2" Array: $\text{rows}(Output2) = 1152$

(9 bolts x 64 load cases) x 2 joints = 1152 load cases

$$\text{WRITEPRN}(\text{"output_forces_diagsillbrack_r2_launch_fs.txt"}) := Output2$$

Bolt Fail-safe Results

The array from the text file above is read:

$$data_fs := \text{READPRN}(\text{"output_forces_diagsillbrack_r2_launch_fs.txt"})$$

$$s := 1 .. \text{rows}(data_fs)$$

Prepared By	Name	Date	Engineering and Science Contract Group	File Name
	Brent Dyer	09/16/05		Diag_Sill_Brack_r3.mcd
Checked By	John Krejci		*Structural Analysis Section*	Drawing No. SDG39135726
Title	Bolts from Diagonal Sill Bracket to Sill Joint			

Fail-safe Loads, launch

Applied tensile load $P_FS_s := data_fs_{s,3} \cdot lbf$ $ID_FS_s := data_fs_{s,1}$

Applied shear load $V_FS_s := data_fs_{s,4} \cdot lbf$ $LC_FS_s := data_fs_{s,2}$

Applied bending moment $M_FS_s := data_fs_{s,5} \cdot in \cdot lbf$

Fail-safe Factors of Safety

Ultimate $SFu_FS := 1.0$

Joint Separation $SFsep_FS := 1.0$

This file uses the calculations shown in \\escfil02\2i11_mathcad\8307_bolts\ multi_bolt_stiffness_insert_FS_RevC

Fail-Safe Stiffness File

Bolt Fail-safe Load data

Joint separation load $\max(Psep_FS) = 14893.56\ lbf$ $\max(P_FS) = 14893.56\ lbf$

Max. load on the bolt(ultimate) $\max(Pb_FS) = 27268\ lbf$ $\max(V_FS) = 2330.345\ lbf$

Summary of fail-safe Margins for bolt:

Joint separation	$MS_minFS_{1,1} = -0.156$	Total Thread shear Ultimate	$MS_minFS_{5,1} = 0.258$
Direct Tension Ultimate	$MS_minFS_{2,1} = 0.779$	Shear Ultimate	$MS_minFS_{6,1} = 5.46$
Total Tension Ultimate	$MS_minFS_{3,1} = 0.118$	Bending Ultimate	$MS_minFS_{7,1} = 10$
Direct Thread shear Ultimate	$MS_minFS_{4,1} = 1$	Combined shear, tension and bending ultimate	$MS_minFS_{8,1} = 0.1151$

Determination of the smallest fail-safe margin of safety for the bolt, and the failure mode:

$MSbolt_FS := \min(MS_FS)$

$MSbolt_FS = -0.156$ $Failure_Mode_FS = \text{"Joint Separation"}$ (Note: For fail-safe analysis, negative margins of safety are allowed for joint separation)

$MS_min_ID = 1721006$	Element Identification (1721) and Bolt Number (6) for Minimum Margin
$MS_min_LC = 1032$	Load Case Number for Minimum Margin
$MS_min_P = 14893.6$	Applied Tensile Load for Minimum Margin
$MS_min_V = 2192.2$	Applied Shear Load for Minimum Margin
$MS_min_M = 0$	Applied Bending Moment for Minimum Margin

2.4.1.6 WIF to Sill Tube Bolted Interfaces

WIF to Sill Tube Bolted Interfaces

The WIF to Sill Tube Bolt Analysis is performed in the following report sections.

2.4.1.6.1	WIF Adaptor Plate to Sill Tube
2.4.1.6.1	WIF Adaptor Plate to Sill Tube Fail-Safe
2.4.1.6.2	WIF Socket to WIF Adaptor Plate
2.4.1.6.2	WIF Socket to WIF Adaptor Plate Fail-Safe

2.4.1.6.1 WIF Adaptor Plate to Sill Tube

WIF Adapter Plate to Sill Tube

Drawing:SDG31135747

Part number: NAS1953C6

The objective of this analysis is to demonstrate the structural strength of the fasteners connecting the WIF Adapter Plate (SDG31135747) to Sill Tube (SDG39135739).
The WIF adapter plate is mounted on the sill tube to support the WIF socket. Finite element analysis of the WIF Adapter Plate was performed (see section 2.1.15).

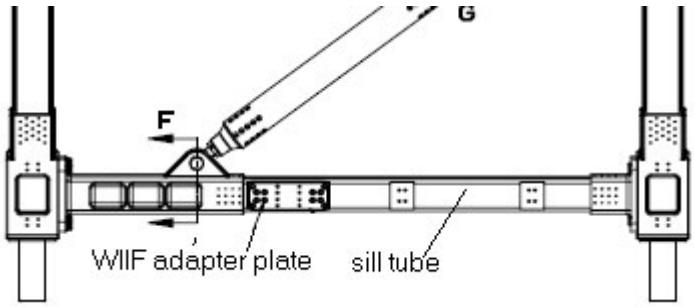

Load

Per CARD JSC-33499, WIF Socket is subjected to
4200in-lbf (bending moment), 4200 in-lbf (torsional moment),
274 (shear force), and 274 lbf (axial force).

Load case 1

ID =1011 for normal analysis
ID=10011 for fail-safe analysis

$Fx := 274lbf$	Axial force
$Fy := 274 \cdot lbf$	Shear force
$Mx := 4200 \cdot in \cdot lbf$	Torsion moment
$Mz := 4200 \cdot in \cdot lbf$	Bending moment

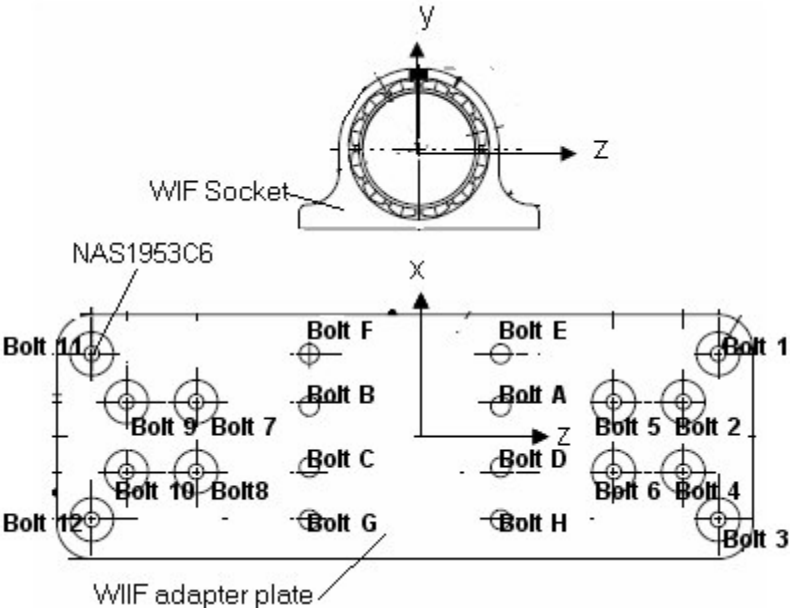

Load case 2

ID =1022 for normal analysis
ID=10022 for fail-safe analysis

$Fx := 274lbf$	Axial force
$Fz := 274 \cdot lbf$	Shear force
$Mx := 4200 \cdot in \cdot lbf$	Torsion moment
$My := 4200 \cdot in \cdot lbf$	Bending moment

Bolt forces were retrieved from the post-processing of FE model data:

1. Normal analysis (file name: bolt12.txt)

Bolt ID	Element ID	Load Case ID	Tension	Shear	Moment
1	30000	1011	579	73	0
2	30001	1011	141	21	0
3	30002	1011	934	157	0
4	30003	1011	8	56	0
5	30004	1011	310	49	0
6	30005	1011	791	19	0
7	30006	1011	604	22	0
8	30007	1011	426	48	0
9	30008	1011	37	8	0
10	30009	1011	87	29	0
11	30010	1011	825	113	0
12	30011	1011	523	84	0
1	30000	1022	218	83	0
2	30001	1022	59	66	0
3	30002	1022	137	112	0
4	30003	1022	74	83	0
5	30004	1022	288	23	0
6	30005	1022	193	73	0
7	30006	1022	48	74	0
8	30007	1022	130	107	0
9	30008	1022	32	95	0
10	30009	1022	18	116	0
11	30010	1022	66	110	0
12	30011	1022	235	157	0

2. Fail-safe analysis (file name: bolt12f.txt)

Bolt ID	Element ID	Load Case ID	Tension	Shear	Moment
1	30000	10011	496	64	0
2	30001	10011	188	29	0
4	30003	10011	965	112	0
5	30004	10011	561	61	0
6	30005	10011	1036	69	0
7	30006	10011	727	4	0
8	30007	10011	525	39	0
9	30008	10011	45	32	0
10	30009	10011	106	23	0
11	30010	10011	985	142	0
12	30011	10011	644	88	0
1	30000	10022	234	99	0
2	30001	10022	68	79	0
4	30003	10022	64	117	0
5	30004	10022	251	33	0
6	30005	10022	230	102	0
7	30006	10022	67	73	0
8	30007	10022	114	109	0
9	30008	10022	30	98	0
10	30009	10022	20	120	0
11	30010	10022	90	113	0
12	30011	10022	216	161	0

(In the fail safe analysis, one critical fastener is removed.)

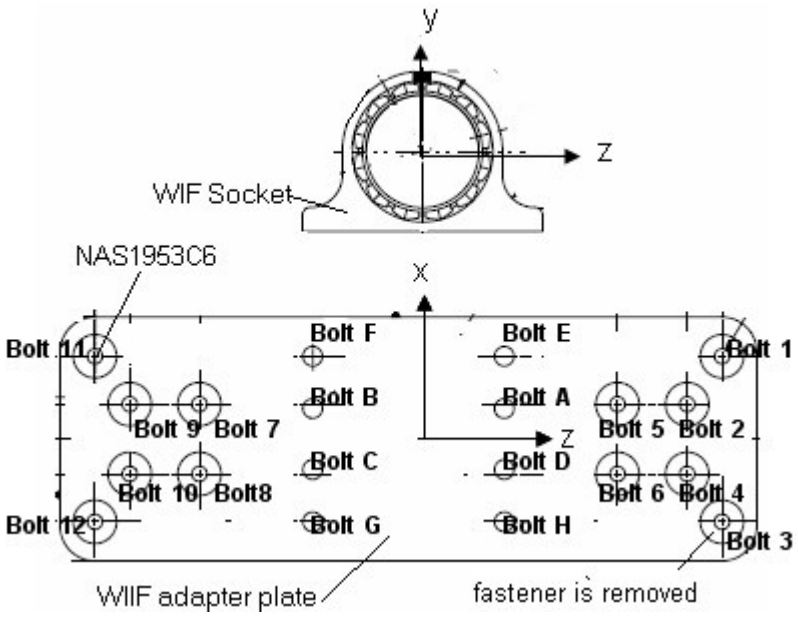

CHECK BOLTS (NAS1953C6 Socket Head Screw Material A286 CRES, Washer NAS1587A3C , Insert MS21209F1-10L, dry film lubricated)

data := READPRN("BOLT12.txt")

s := 1 .. rows(data)

Flange 1: Adapter plate
Part number: SDG39135747
Material: 6061-T651

Flange 2: Still Tube
Part number: SDG39135739
Material: 7075-T7351

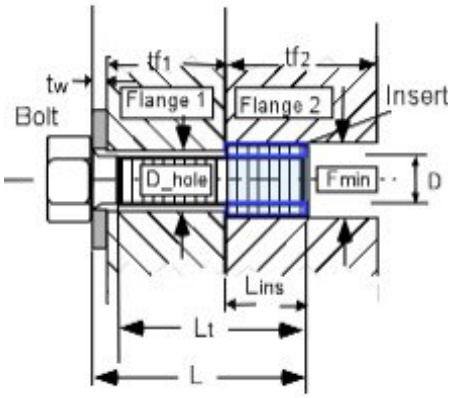

Loads

Applied tensile load $P_s := data_{s,3} \cdot lbf$ $ID_s := data_{s,1}$

Applied shear load $V_s := data_{s,4} \cdot lbf$ $LC_s := data_{s,2}$

Applied bending moment $M_s := data_{s,5} \cdot in \cdot lbf$

Factors of Safety

Ultimate $SFu := 2.0$ Yield $SFy := 1.25$

Joint Separation $SFsep := 1.2$ Fitting factor $FF := 1.15$

Temperature data (Ref. Appendix C2)

Assembly $Temp_initial := 70 \cdot deg$

Maximum $Temp_max := 140 \cdot deg$

Minimum $Temp_min := -50 \cdot deg$

Bolt and Insert Data

Nominal diameter of bolt $D := 0.19 \cdot in$

Number of threads/inch $Nt := 32 \cdot \frac{1}{in}$

Total length of bolt $L := 0.713 \cdot in$

Length of insert $Lins := 0.19 \cdot in$

Threaded length $Lt := 0.338 \cdot in$

Min. external diameter of insert $Fmin := 0.236 \cdot in$

(If bolt is fully threaded, input Lt = L)

Depth of recess for insert $lr := 0.02 \cdot in$

This file uses the calculations shown in \\escfil02\2i11_mathcad\8307_bolts\thread_data.mcd

Washer Data

Thickness of washer $tw := 0.062 \cdot in$

Outer Diameter of washer $Dw := 0.469 \cdot in$

Inner Diameter of washer $Dwi := 0.192 \cdot in$

Bolt head dia. across flats $dw := 0.335 \cdot in$

Flange data

Thickness of flange 1 $tf1 := 0.435 \cdot in$

Thickness of flange 2 $tf2 := 0.25in$

Diameter of hole $D_hole := 0.218 \cdot in$

(used only if there is no washer)

Note: If there is no washer, tw, Dw, and Dwi should be zero.

Material Property Data

Bolt

Temperature correction factor for bolt strength ultimate $TSu_bolt := 0.98$ yield $TSy_bolt := 0.98$

Bolt ultimate tensile allowable stress $Ftu_bolt := 180000 \cdot psi$

Bolt ultimate shear allowable stress $Fsu_bolt := 0.6 \cdot Ftu_bolt$

Bolt yield tensile allowable $Fty_bolt := 132000 \cdot psi$

Temperature correction factor for bolt modulus $TE_bolt := 0.98$

Modulus of elasticity of bolt $E_bolt := \left(29.1 \cdot 10^{6} \cdot psi\right)$ Thermal coefficient for bolt: $\beta_bolt_hot := 9.1 \cdot 10^{-6} \cdot \frac{\frac{in}{in}}{deg}$

$\beta_bolt_cold := 8.5 \cdot 10^{-6} \cdot \frac{\frac{in}{in}}{deg}$

Insert

Temperature correction factor for insert strength $TS_ins := 0.98$

Ultimate tensile allowable stress $Ftu_ins := 150000 \cdot psi$

Ultimate shear allowable stress $Fsu_ins := 0.6 \cdot Ftu_ins$

Washer

Temperature correction factor for washer modulus $TE_washer := 0.98$

Modulus of elasticity of washer $E_washer := \left(29.1 \cdot 10^{6} \cdot psi\right)$

Flanges

Stiffness of the joint depends upon number of members in the grip of the fasteners, Modulus of elasticity of these members, and diameters of the bolt and the washer.

Temperature correction factor for flange 1 $Tf1E := 0.99$ (modulus) $Tf2s := 0.96$ (strength)

Temperature correction factor for flange 2 $Tf2E := 0.98$ (modulus) $Fsu_f2 := 37000 \cdot psi$

Modulus of elasticity for the parts in the joint $E_flange1 := \left(10.1 \cdot 10^{6} \cdot psi\right)$ $E_flange2 := \left(10.6 \cdot 10^{6} \cdot psi\right)$

Coefficient of thermal expansion for flanges $\beta_flange1_hot := 12.8 \cdot 10^{-6} \cdot \frac{\frac{in}{in}}{deg}$ $\beta_flange2_hot := 12.6 \cdot 10^{-6} \cdot \frac{\frac{in}{in}}{deg}$

$\beta_flange1_cold := 12.2 \cdot 10^{-6} \cdot \frac{\frac{in}{in}}{deg}$ $\beta_flange2_cold := 12.2 \cdot 10^{-6} \cdot \frac{\frac{in}{in}}{deg}$

Torque/Preload data

Maximum torque $Tmax := 48.257 \cdot in \cdot lbf$ Loading plane factor: $n := 0.5$

Minimum torque $Tmin := 45.844 \cdot in \cdot lbf$ Preload Uncertainty: $u := 0.25$

Torque coefficient: $k := 0.15$

This file uses the calculations shown in \\escfil02\2i11_mathcad\8307_bolts\multi_bolt_stiffness_insert_RevA

Bolt Load data

Bolt/joint stiffness factor	$= 0.204$	Preload due to temperature	$Pthr_pos = 145.8 \cdot lbf$
Max. preload	$PLDmax = 2262.4 \cdot lbf$		$Pthr_neg = -254.5 \cdot lbf$
Min. preload	$PLDmin = 846.1 \cdot lbf$	Uncertainty factor	$u = 0.25$
Joint separation load	$max(Psep) = 1120.899 \cdot lbf$	Torque coefficient	$k = 0.15$
Max. load on the bolt(ultimate)	$max(Pb) = 2481.8 \cdot lbf$	Loading plane factor	$n = 0.5$
Max. load on the bolt(yield)	$max(Pby) = 2399.5 \cdot lbf$	Thread shear pullout load of bolt or insert	$Pths = 4608.1 \cdot lbf$
Bolt ultimate tensile strength	$PAt = 3395.5 \cdot lbf$	Thread shear pullout load in parent metal	$Ppths = 2501.8 \cdot lbf$

Length_check = "Bolt length is sufficient"

Summary of Margins for bolt:

Joint separation	$MS_min_{1,1} = -0.269$	Direct Thread shear Ultimate	$MS_min_{6,1} = 0.165$
Direct Tension Ultimate	$MS_min_{2,1} = 0.580$	Total Thread shear Ultimate	$MS_min_{7,1} = 0.008$
Direct Tension Yield	$MS_min_{3,1} = 0.854$	Shear Ultimate	$MS_min_{8,1} = 4.15$
Total Tension Ultimate	$MS_min_{4,1} = 0.368$	Bending Ultimate	$MS_min_{9,1} = 10$
Total Tension Yield	$MS_min_{5,1} = 0.038$	Combined shear, tension and bending ultimate	$MS_min_{10,1} = 0.356$

Determination of the smallest margin of safety for the bolt, and the failure mode:

$MSbolt := min(MS)$

$MSbolt = -0.269$ Failure_Mode = "Joint Separation"

$MS_min_ID = 30002$

$MS_min_LC = 1011$

Note : As shown in the next page, three out of twelve bolts of the bolt group have negative Margin of Safety against Joint Separation.

Prepared By	Name	Date	Engineering and Science Contract Group	File Name
	KC San	06/22/05		adapter plate to sill tube
Checked By	J. Krejci		*Structural Analysis Section*	Draw ing No. SDG39135747
Title	WIF Adapter Plate to Sill Tube			

Summary of Margins for bolts:

Load Case 1:

MS =

	Joint separation	Direct Tension Ultimate	Direct Tension Yield	Total Tension Ultimate	Total Tension Yield	Direct Thread shear Ultimate	Total Thread shear Ultimate	Shear Ultimate	Bending Ultimate	Combined shear, tension and bending ultimate
	1	2	3	4	5	6	7	8	9	10
1	0.18	1.55	1.992	0.416	0.061	0.879	0.043	10.063	10	0.414
2	3.833	9.449	11.26	0.479	0.091	6.699	0.09	37.38	10	0.479
3	-0.269	0.58	0.854	0.368	0.038	0.165	$8.08 \cdot 10^{-3}$	4.151	10	0.356
4	82.611	179.755	211.086	0.5	0.1	132.183	0.105	13.453	10	0.499
5	1.203	3.762	4.588	0.454	0.079	2.509	0.071	15.307	10	0.454
6	-0.137	0.866	1.189	0.387	0.047	0.375	0.022	41.82	10	0.387
7	0.131	1.446	1.87	0.412	0.059	0.802	0.041	35.642	10	0.412
8	0.603	2.465	3.066	0.437	0.071	1.553	0.059	15.821	10	0.437
9	17.559	39.123	46.077	0.495	0.098	28.563	0.102	105.151	10	0.495
10	6.894	16.065	19.023	0.487	0.094	11.574	0.096	26.372	10	0.487
11	-0.172	0.79	1.1	0.382	0.045	0.319	0.019	6.134	10	0.377
12	0.305	1.821	2.31	0.424	0.064	1.079	0.049	8.614	10	...

Load Case 2:

MS =

	1	2	3	4	5	6	7	8	9	10
1	0.18	1.55	1.992	0.416	0.061	0.879	0.043	10.063	10	0.414
2	3.833	9.449	11.26	0.479	0.091	6.699	0.09	37.38	10	0.479
3	-0.269	0.58	0.854	0.368	0.038	0.165	$8.08 \cdot 10^{-3}$	4.151	10	0.356
4	82.611	179.755	211.086	0.5	0.1	132.183	0.105	13.453	10	0.499
5	1.203	3.762	4.588	0.454	0.079	2.509	0.071	15.307	10	0.454
6	-0.137	0.866	1.189	0.387	0.047	0.375	0.022	41.82	10	0.387
7	0.131	1.446	1.87	0.412	0.059	0.802	0.041	35.642	10	0.412
8	0.603	2.465	3.066	0.437	0.071	1.553	0.059	15.821	10	0.437
9	17.559	39.123	46.077	0.495	0.098	28.563	0.102	105.151	10	0.495
10	6.894	16.065	19.023	0.487	0.094	11.574	0.096	26.372	10	0.487
11	-0.172	0.79	1.1	0.382	0.045	0.319	0.019	6.134	10	0.377
12	0.305	1.821	2.31	0.424	0.064	1.079	0.049	8.614	10	...

Fail-safe Analysis

data_fs := READPRN("BOLT12f.txt")

$s := 1 .. rows(data_fs)$

Applied tensile load $P_FS_s := data_fs_{s,3} \cdot lbf$ $ID_FS_s := data_fs_{s,1}$

Applied shear load $V_FS_s := data_fs_{s,4} \cdot lbf$ $LC_FS_s := data_fs_{s,2}$

Applied bending moment $M_FS_s := data_fs_{s,5} \cdot in \cdot lbf$

Fail-safe Factors of Safety

Ultimate $SFu_FS := 1.0$

Joint Separation $SFsep_FS := 1.0$

This file uses the calculations shown in \\escfil02\2i11_mathcad\8307_bolts\ multi_bolt_stiffness_insert_FS_RevA

Bolt Fail-safe Load data

Joint separation load $\max(Psep_FS) = 1035.94 \cdot lbf$

Max. load on the bolt(ultimate) $\max(Pb_FS) = 2384 \cdot lbf$

Summary of fail-safe Margins for bolt:

Joint separation	$MS_minFS_{1,1} = -0.209$	Total Thread shear Ultimate	$MS_minFS_{5,1} = 0.049$
Direct Tension Ultimate	$MS_minFS_{2,1} = 1.850$	Shear Ultimate	$MS_minFS_{6,1} = 9.02$
Total Tension Ultimate	$MS_minFS_{3,1} = 0.424$	Bending Ultimate	$MS_minFS_{7,1} = 10$
Direct Thread shear Ultimate	$MS_minFS_{4,1} = 1.1$	Combined shear, tension and bending ultimate	$MS_minFS_{8,1} = 0.424$

Determination of the smallest fail-safe margin of safety for the bolt, and the failure mode:

$MSbolt_FS := \min(MS_FS)$

$MSbolt_FS = -0.209$ Failure_Mode_FS = "Joint Separation"

$MS_min_ID = 30005$

$MS_min_LC = 10011$

Note : The fail-safe does not require the Margin of Safety against Joint Separation.Therefore, the minimum Margin of Safety should be 0.049 with the failure mode of Total Thread shear Ultimate.

Prepared By	Name	Date	Engineering and Science Contract Group	File Name
	KC San	06/22/05		adapter plate to sill tube
Checked By	J. Krejci		*Structural Analysis Section*	Draw ing No. SDG39135747
Title	WIF Adapter Plate to Sill Tube			

Bearing on Hole Wall SDG39135747

Edge distance $e := 0.5 \cdot in$ Ref. Drg. SDG39135747

Hole diameter $dh := 0.218 \cdot in$

Plate thickness $tp := 0.435 \cdot in$

Bearing area $Ab := dh \cdot tp$ $Ab = 0.095 \cdot in^2$

Nominal diameter of bolt $D = 0.19 \cdot in$ $\frac{e}{D} = 2.632$

Plate material 6061-T651, e/D=2

Allowable bearing strength $Fbru := 88 \cdot 10^3 \cdot psi$ Ref. MIL-HDBK-5J, Table 3.6.2.0(b2)

load per bolt

$V =$

	1
1	72.9
2	21
3	156.6
4	55.8
5	49.5
6	18.8
7	22
8	48
9	7.6
10	29.5
11	113.1
12	83.9
13	83.3
14	66.2
15	112
16	82.9
17	23.1
18	72.8
19	73.6
20	107.3
21	95.1
22	116.3
23	109.9
24	156.6

$\cdot lbf$

Max. load per bolt

$Vmax := max(V)$

$Vmax = 156.641\ lbf$

bearing stress

$=b := \frac{V}{Ab}$

$=b =$

	1
1	769
2	221.7
3	1651.5
4	588.6
5	521.7
6	198.7
7	232.2
8	505.8
9	80.1
10	310.8
11	1192.5
12	884.9
13	878
14	698.4
15	1181.6
16	874.2
17	243.1
18	767.2
19	775.6
20	1131.6
21	1002.9
22	1226.2
23	1159
24	1651.8

$\cdot psi$

Max. bearing stress

$=bmax := max(=b)$

$=bmax = 1.652 \times 10^3\ psi$

Margin of safety

$MS := \frac{Fbru \cdot .96}{=b \cdot SFu} - 1$

$MS =$

	1
1	53.931
2	189.561
3	24.577
4	70.76
5	79.968
6	211.603
7	180.93
8	82.517
9	526.052
10	134.905
11	34.42
12	46.735
13	47.108
14	59.477
15	34.749
16	47.32
17	172.731
18	54.055
19	53.459
20	36.328
21	41.12
22	33.449
23	35.447
24	24.572

Margin of safety

$MSmin := min(MS)$

$MSmin = 24.572$

Prepared By	Name	Date	Engineering and Science Contract Group	File Name
	KC San	06/22/05		adapter plate to sill tube
Checked By	J. Krejci		*Structural Analysis Section*	Drawing No. SDG39135747
Title	WIF Adapter Plate to Sill Tube			

Shear tear out

Shear out area $As := 2\cdot\left(e - \frac{dh}{2}\right)\cdot tp$ $As = 0.34\cdot in^2$

Plate material 6061-T651

Allowable shear strength $Fsu := 27\cdot 10^3\cdot psi$ Ref. MIL-HDBK-5J, Table 3.6.2.0(b2)

load per bolt

$V =$

	1
1	72.921
2	21.02
3	156.612
4	55.82
5	49.472
6	18.841
7	22.017
8	47.961
9	7.6
10	29.474
11	113.089
12	83.913
13	83.263
14	66.233
15	112.048
16	82.899
17	23.056
18	72.757
19	73.553
20	107.309
21	95.101
22	116.278
23	109.904
24	156.641

lbf

Max. load per bolt

$Vmax := max(V)$

$Vmax = 156.641\ lbf$

shear tear out stress

$ys := \frac{V}{As}$

$ys =$

	1
1	214.4
2	61.8
3	460.4
4	164.1
5	145.4
6	55.4
7	64.7
8	141
9	22.3
10	86.6
11	332.4
12	246.7
13	244.8
14	194.7
15	329.4
16	243.7
17	67.8
18	213.9
19	216.2
20	315.5
21	279.6
22	341.8
23	323.1
24	460.5

$\cdot psi$

Max. shear tear out stress

$ysmax := max(ys)$

$ysmax = 460.477\ psi$

Margin of safety

$MS := \frac{Fsu\cdot .96}{ys\cdot SFu} - 1$

$MS =$

	1
1	59.46
2	208.73
3	27.15
4	77.98
5	88.11
6	232.99
7	199.23
8	90.92
9	579.08
10	148.58
11	37.98
12	51.54
13	51.95
14	65.56
15	38.35
16	52.18
17	190.21
18	59.59
19	58.94
20	40.08
21	45.36
22	36.91
23	39.11
24	27.14

Margin of safety

$MSmin := min(MS)$

$MSmin = 27.145$

2.4.1.6.2 WIF Socket to WIF Adaptor Plate

WIF Socket to WIF Adapter Plate

Drawing:SDG39135747

Part number: NAS1954C6 HEX HEAD

The objective of this analysis is to demonstrate the structural strength of the fasteners connecting the WIF Socket (SEG33106860) to WIF Adapter Plate(SDG39135747).
The WIF adapter plate is mounted on the sill tube to support the WIF socket. Finite element analysis of the WIF Adapter Plate was performed (see section 2.1.15).

Load

Per CARD JSC-33499, WIF Socket is subjected to
4200in-lbf (bending moment), 4200 in-lbf (torsional moment),
274 (shear force), and 274 lbf (axial force).

Load case 1

ID =1001 for normal analysis
ID=1011for fail-safe analysis

$Fx := 274lbf$	Axial force
$Fy := 274 \cdot lbf$	Shear force
$Mx := 4200 \cdot in \cdot lbf$	Torsion moment
$Mz := 4200 \cdot in \cdot lbf$	Bending moment

Load case 2

ID =1002 for normal analysis
ID=1022 for fail-safe analysis

$Fx := 274lbf$	Axial force
$Fz := 274 \cdot lbf$	Shear force
$Mx := 4200 \cdot in \cdot lbf$	Torsion moment
$My := 4200 \cdot in \cdot lbf$	Bending moment

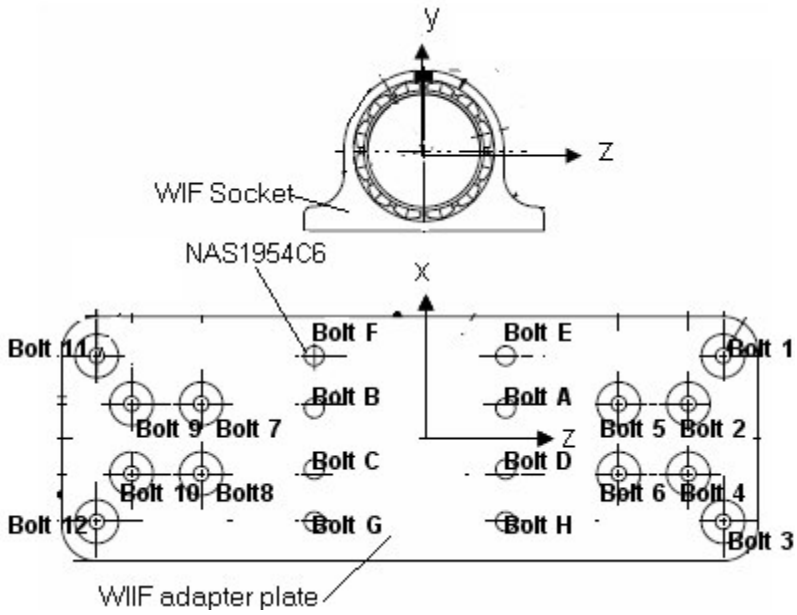

Bolt forces were retrieved from the post-processing of FE model data:

1. Normal analysis (file name: bolt1-4.txt)

Bolt ID	Element ID	Load Case ID	Tension	Shear	Moment
A	75	1001	328	48	0
B	87	1001	577	47	0
C	108	1001	220	28	0
D	120	1001	736	32	0
E	244	1001	646	103	0
F	286	1001	1122	109	0
G	373	1001	529	68	0
H	415	1001	1246	65	0
A	75	1002	553	175	0
B	87	1002	390	225	0
C	108	1002	407	246	0
D	120	1002	512	152	0
E	244	1002	394	407	0
F	286	1002	257	545	0
G	373	1002	336	586	0
H	415	1002	206	368	0

2. Fail-safe analysis (file name: bolt1-4f.txt)

Bolt ID	Element ID	Load Case ID	Tension	Shear	Moment
A	75	1011	284	53	0
B	87	1011	665	45	0
C	108	1011	242	25	0
E	120	1011	2306	64	0
F	244	1011	925	109	0
G	286	1011	1241	106	0
H	373	1011	757	56	0
A	75	1022	545	202	0
B	87	1022	405	233	0
C	108	1022	411	291	0
E	120	1022	771	351	0
F	244	1022	348	455	0
G	286	1022	276	549	0
H	373	1022	298	675	0

In the fail safe analysis, one critical fastener is removed.

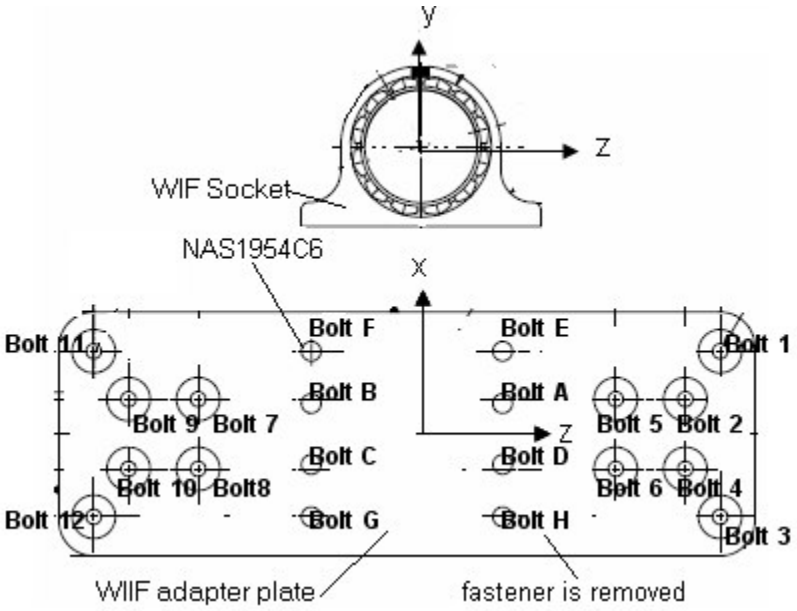

CHECK BOLTS (NAS1954C6 HEX Head Screw Material A286 CRES, Washer NAS1587-4C, Insert MS21209F4-15, dry film lubricated)

data := READPRN("bolt1-4.txt")

$s := 1..rows(data)$

Flange 1
Part name: WIF Adapter Plate
Part number: SDG39135747
Material: AL 6061-T651

Flange 2
Part name: Side Mounted Passive WIF
Part number: SEG33106860
Material: AL 7075-T7351

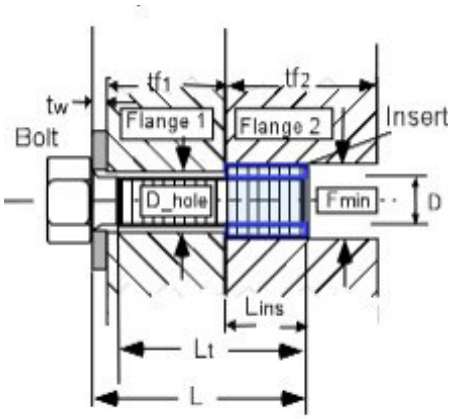

Loads

Applied tensile load $P_s := data_{s,3} \cdot lbf$ $ID_s := data_{s,1}$

Applied shear load $V_s := data_{s,4} \cdot lbf$ $LC_s := data_{s,2}$

Applied bending moment $M_s := data_{s,5} \cdot in \cdot lbf$

Factors of Safety

Ultimate $SFu := 2.0$ Yield $SFy := 1.25$

Joint Separation $SFsep := 1.2$ Fitting factor $FF := 1.15$

Temperature data

Assembly $Temp_initial := 70 \cdot deg$

Maximum $Temp_max := 140 \cdot deg$

Minimum $Temp_min := -50 \cdot deg$

Bolt and Insert Data

Nominal diameter of bolt $D := 0.250 \cdot in$

Number of threads/inch $Nt := 28 \cdot \frac{1}{in}$

Total length of bolt $L := 0.8 \cdot in$

Length of insert $Lins := 0.375 \cdot in$

Threaded length $Lt := 0.425 \cdot in$

Min. external diameter of insert $Fmin := 0.306 \cdot in$

(If bolt is fully threaded, input Lt = L)

Depth of recess for insert $lr := 0.02 \cdot in$

This file uses the calculations shown in \\escfil02\2i11_mathcad\8307_bolts\thread_data.mcd

Washer Data

Thickness of washer $tw := 0.078 \cdot in$

Outer Diameter of washer $Dw := 0.531in$

Inner Diameter of washer $Dwi := 0.252 \cdot in$

Bolt head dia. across flats $dw := 0.398 \cdot in$

Flange data

Thickness of flange 1 $tf1 := 0.375 \cdot in$

Thickness of flange 2 $tf2 := 0.375in$

Diameter of hole $D_hole := 0.281 \cdot in$

(used only if there is no washer)

Note: If there is no washer, tw, Dw, and Dwi should be zero.

Material Property Data

Bolt

Temperature correction factor for bolt strength ultimate $TSu_bolt := 0.98$ yield $TSy_bolt := 0.98$

Bolt ultimate tensile allowable stress $Ftu_bolt := 180000 \cdot psi$

Bolt ultimate shear allowable stress $Fsu_bolt := 0.6 \cdot Ftu_bolt$

Bolt yield tensile allowable $Fty_bolt := 132000 \cdot psi$

Temperature correction factor for bolt modulus $TE_bolt := 0.98$

Modulus of elasticity of bolt $E_bolt := \left(29.1 \cdot 10^{6} \cdot psi\right)$ Thermal coefficient for bolt: $\beta_bolt_hot := 9.1 \cdot 10^{-6} \cdot \frac{\frac{in}{in}}{deg}$

$\beta_bolt_cold := 8.5 \cdot 10^{-6} \cdot \frac{\frac{in}{in}}{deg}$

Insert

Temperature correction factor for insert strength $TS_ins := 0.98$

Ultimate tensile allowable stress $Ftu_ins := 150000 \cdot psi$

Ultimate shear allowable stress $Fsu_ins := 0.6 \cdot Ftu_ins$

Washer

Temperature correction factor for washer modulus $TE_washer := 0.98$

Modulus of elasticity of washer $E_washer := \left(29.1 \cdot 10^{6} \cdot psi\right)$

Flanges

Stiffness of the joint depends upon number of members in the grip of the fasteners, Modulus of elasticity of these members, and diameters of the bolt and the washer.

Temperature correction factor for flange 1 $Tf1E := 0.99$ (modulus) $Tf2s := 0.96$ (strength)

Temperature correction factor for flange 2 $Tf2E := 0.98$ (modulus) $Fsu_f2 := 39000 \cdot psi$

Modulus of elasticity for the parts in the joint $E_flange1 := \left(10.1 \cdot 10^{6} \cdot psi\right)$ $E_flange2 := \left(10.6 \cdot 10^{6} \cdot psi\right)$

Coefficient of thermal expansion for flanges $\beta_flange1_hot := 12.8 \cdot 10^{-6} \cdot \frac{\frac{in}{in}}{deg}$ $\beta_flange2_hot := 12.6 \cdot 10^{-6} \cdot \frac{\frac{in}{in}}{deg}$

$\beta_flange1_cold := 12.2 \cdot 10^{-6} \cdot \frac{\frac{in}{in}}{deg}$ $\beta_flange2_cold := 12.2 \cdot 10^{-6} \cdot \frac{\frac{in}{in}}{deg}$

Torque/Preload data

Maximum torque $Tmax := 121.521 \cdot in \cdot lbf$ Loading plane factor: $n := 0.5$

Minimum torque $Tmin := 115.445 \cdot in \cdot lbf$ Preload Uncertainty: $u := 0.25$

Torque coefficient: $k := 0.15$

This file uses the calculations shown in \\escfil02\2i11_mathcad\8307_bolts\multi_bolt_stiffness_insert_RevA

Bolt Load data

Bolt/joint stiffness factor	$= 0.278$	Preload due to temperature	$Pthr_pos = 249.2 \cdot lbf$
Max. preload	$PLDmax = 4299.9 \cdot lbf$		$Pthr_neg = -438.6 \cdot lbf$
Min. preload	$PLDmin = 1667.8 \cdot lbf$	Uncertainty factor	$u = 0.25$
Joint separation load	$max(Psep) = 1494.83 \cdot lbf$	Torque coefficient	$k = 0.15$
Max. load on the bolt(ultimate)	$max(Pb) = 4698.1 \cdot lbf$	Loading plane factor	$n = 0.5$
Max. load on the bolt(yield)	$max(Pby) = 4548.8 \cdot lbf$	Thread shear pullout load of bolt or insert	$Pths = 10274.9 \cdot lbf$
Bolt ultimate tensile strength	$PAt = 6223.9 \cdot lbf$	Thread shear pullout load in parent metal	$Ppths = 6748.5 \cdot lbf$

Length_check = "Bolt length is sufficient"

Summary of Margins for bolt:

Joint separation	$MS_min_{1,1} = 0.127$	Direct Thread shear Ultimate	$MS_min_{6,1} = 1.355$
Direct Tension Ultimate	$MS_min_{2,1} = 1.172$	Total Thread shear Ultimate	$MS_min_{7,1} = 0.436$
Direct Tension Yield	$MS_min_{3,1} = 1.549$	Shear Ultimate	$MS_min_{8,1} = 1.56$
Total Tension Ultimate	$MS_min_{4,1} = 0.325$	Bending Ultimate	$MS_min_{9,1} = 10$
Total Tension Yield	$MS_min_{5,1} = 0.003$	Combined shear, tension and bending ultimate	$MS_min_{10,1} = 0.313$

Determination of the smallest margin of safety for the bolt, and the failure mode:

$MSbolt := min(MS)$

$MSbolt = 0.003$ Failure_Mode = "Total Tension Yield"

$MS_min_ID = 415$

$MS_min_LC = 1001$

Fail-safe Analysis

$data_fs := READPRN("bolt1\text{-}4f.txt")$

$s := 1 .. rows(data_fs)$

Fail-safe Factors of Safety

Applied tensile load $P_FS_s := data_fs_{s,3} \cdot lbf$ $ID_FS_s := data_fs_{s,1}$

Applied shear load $V_FS_s := data_fs_{s,4} \cdot lbf$ $LC_FS_s := data_fs_{s,2}$

Applied bending moment $M_FS_s := data_fs_{s,5} \cdot in \cdot lbf$

Ultimate $SFu_FS := 1.0$

Joint Separation $SFsep_FS := 1.0$

This file uses the calculations shown in \\escfil02\2i11_mathcad\8307_bolts\ multi_bolt_stiffness_insert_FS_RevA

Bolt Fail-safe Load data

Joint separation load $\max(Psep_FS) = 2305.979 \cdot lbf$

Max. load on the bolt(ultimate) $\max(Pb_FS) = 4668.5 \cdot lbf$

Summary of fail-safe Margins for bolt:

Joint separation	$MS_minFS_{1,1} = -0.270$	Total Thread shear Ultimate	$MS_minFS_{5,1} = 0.446$
Direct Tension Ultimate	$MS_minFS_{2,1} = 1.347$	Shear Ultimate	$MS_minFS_{6,1} = 3.44$
Total Tension Ultimate	$MS_minFS_{3,1} = 0.333$	Bending Ultimate	$MS_minFS_{7,1} = 10$
Direct Thread shear Ultimate	$MS_minFS_{4,1} = 1.54$	Combined shear, tension and bending ultimate	$MS_minFS_{8,1} = 0.333$

Determination of the smallest fail-safe margin of safety for the bolt, and the failure mode:

$MSbolt_FS := \min(MS_FS)$

$MSbolt_FS = -0.270$ $Failure_Mode_FS = "Joint\ Separation"$

$MS_min_ID = 120$

$MS_min_LC = 1011$

Note : The fail-safe does not require the Margin of Safety against Joint Separation. Therefore, the minimum Margin of Safety should be 0.333 with the failure mode of Total Tension Ultimate.

Prepared By	Name	Date	Engineering and Science Contract Group	File Name
	KC San	06/22/05		WIF socket to plate
Checked By	J. Krejci		*Structural Analysis Section*	Draw ing No. SDG39135747
Title	WIF Socket to WIF Adapter Plate			

Bearing on Hole Wall SDG39135747

Edge distance $e := 0.562 \cdot in$ Ref. Drg. SDG39135747

Hole diameter $dh := 0.281 \cdot in$

Plate thickness $tp := 0.375 \cdot in$

Bearing area $Ab := dh \cdot tp$ $Ab = 0.105 \cdot in^2$

Nominal diameter of bolt $D := 0.250 \cdot in$ $\frac{e}{D} = 2.248$

Plate material 6061-T651, e/D=2

Allowable bearing strength $Fbru := 88 \cdot 10^3 \cdot psi$ Ref. MIL-HDBK-5J, Table 3.6.2.0(b2)

load per bolt

$V =$

	1
1	48.4
2	46.5
3	28
4	31.8
5	102.7
6	108.7
7	67.7
8	64.5
9	175.1
10	224.9
11	245.8
12	152.4
13	406.8
14	544.6
15	585.7
16	368.1

$\cdot lbf$

bearing stress

$=b := \frac{V}{Ab}$

$=b =$

	1
1	459.5
2	441.7
3	265.7
4	301.6
5	974.8
6	1031.3
7	642.7
8	612.6
9	1662
10	2134.6
11	2332.8
12	1446.5
13	3860.4
14	5168.5
15	5558.1
16	3492.8

$\cdot psi$

Margin of safety

$MS := \frac{Fbru \cdot .96}{=b \cdot SFu} - 1$

$MS =$

	1
1	90.93
2	94.623
3	157.988
4	139.046
5	42.33
6	39.96
7	64.726
8	67.955
9	24.416
10	18.788
11	17.107
12	28.201
13	9.942
14	7.173
15	6.6
16	11.093

Max. load per bolt

$Vmax := max(V)$

$Vmax = 585.686\,lbf$

Max. bearing stress

$=bmax := max(=b)$

$=bmax = 5.558 \times 10^3\,psi$

Margin of safety

$MSmin := min(MS)$

$MSmin = 6.6$

Prepared By	Name	Date		File Name
	KC San	06/22/05		WIF socket to plate
Checked By	J. Krejci		**Engineering and Science Contract Group** *Structural Analysis Section*	Draw ing No. SDG39135747
Title	WIF Socket to WIF Adapter Plate			

Shear tear out

Shear out area $As := 2\cdot\left(e - \frac{dh}{2}\right)\cdot tp$ $As = 0.316\cdot in^2$

Plate material 6061-T651

Allowable shear strength $Fsu := 27\cdot 10^3\cdot psi$ Ref. MIL-HDBK-5H, Table 3.6.2.0(b2)

load per bolt

$V =$

	1
1	48.418
2	46.548
3	27.996
4	31.783
5	102.723
6	108.668
7	67.721
8	64.55
9	175.131
10	224.938
11	245.814
12	152.43
13	406.787
14	544.634
15	585.686
16	368.052

lbf

shear tear out stress

$ys := \frac{V}{As}$

$ys =$

	1
1	153.2
2	147.2
3	88.6
4	100.5
5	324.9
6	343.8
7	214.2
8	204.2
9	554
10	711.5
11	777.6
12	482.2
13	1286.8
14	1722.8
15	1852.7
16	1164.3

$\cdot psi$

Margin of safety

$MS := \frac{Fsu\cdot .96}{ys\cdot SFu} - 1$

$MS =$

	1
1	83.62
2	87.02
3	145.34
4	127.91
5	38.88
6	36.7
7	59.5
8	62.47
9	22.39
10	17.21
11	15.67
12	25.88
13	9.07
14	6.52
15	6
16	10.13

Max. load per bolt

$Vmax := max(V)$

$Vmax = 585.686\,lbf$

Max. shear tear out stress

$ysmax := max(ys)$

$ysmax = 1.853\times 10^3\,psi$

Margin of safety

$MSmin := min(MS)$

$MSmin = 5.995$

2.4.1.7 Bushing Plate to Upper and Lower USS-02 Vacuum Case Joint

Prepared By	Name	Date		File Name
	Brent Dyer	03/29/06	**Engineering and Science Contract Group**	BP_VCJ.mcd
Checked By	C. Bala	4/11/06	*Structural Analysis Section*	Draw ing No. SEG39135726
Title	Bolts from Bushing Plate to Vacuum Case Joint			

The USS Vacuum Case Joints are connected to the the Interface Plates with a combination of fasteners and shear pins. Each Joint has one shear pin. The shear pin is prevented from backing out of the joint by the Bushing plate. The Bushing plate is held in place with two .086-56 screws. This is shown in the figure below.

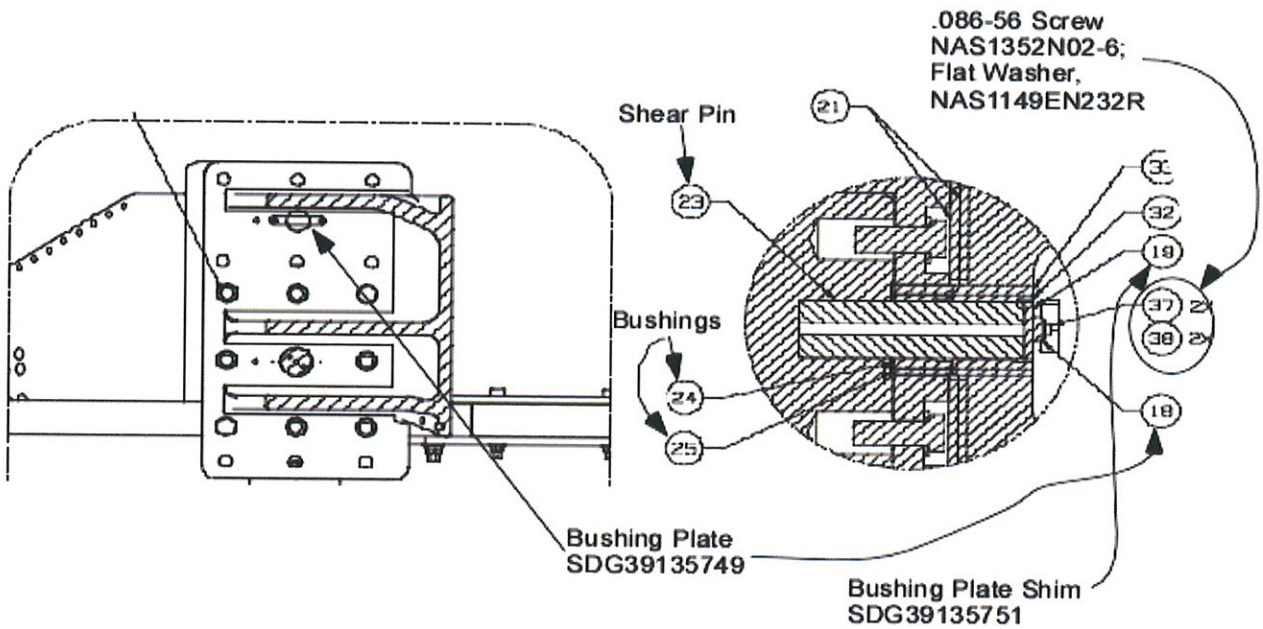

Loading on the screws will come from inertial loading of the plate. We'll use simplified design options which means we'll use 40g as the inertial load.

$$LF := 40 \cdot g$$

Since there is also a shim (SDG39135751), we'll use the mass of both the plate and the shim to calculate the resultant load.

Shim is shown here:

$dia := .875 \cdot in$

$ts := .125 \cdot in$

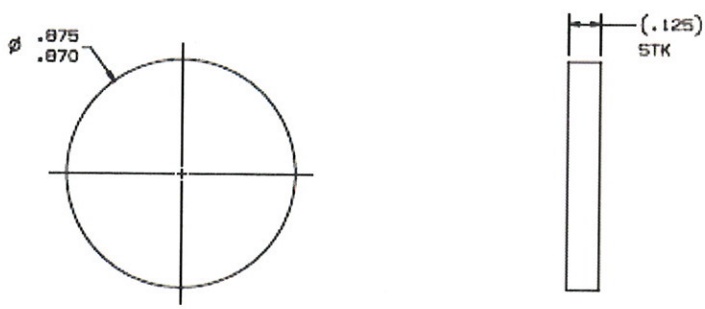

-801

Prepared By	Name	Date		File Name
	Brent Dyer	03/29/06	**Engineering and Science Contract Group** *Structural Analysis Section*	BP_VCJ.mcd
Checked By	C. Bala	4/11/06		Draw ing No. SEG39135726
Title	Bolts from Bushing Plate to Vacuum Case Joint			

Bushing Plate is shown in the figure to the right

Plate dimensions are:

$Lp := 2.407 \cdot in$

$Wp := .376 \cdot in$

$Tp := .125 \cdot in$

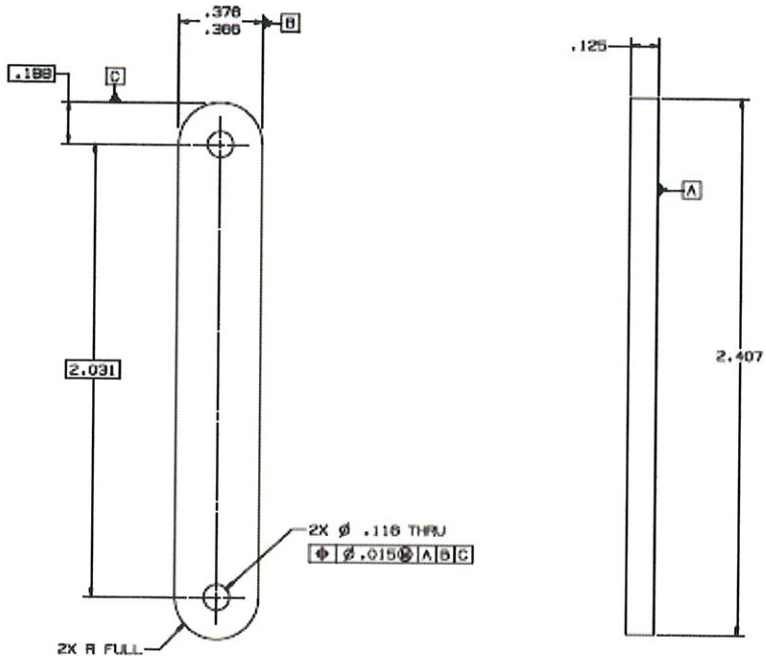

Volume of plate and shim is therefore: $V := Lp \cdot Wp \cdot Tp + \pi \cdot \left(\frac{dia}{2}\right)^2 \cdot ts$ $\quad V = 0.188\,in^3$

Plate is made of 6061-T651 aluminium. Use density as: $\omega := .098 \cdot \frac{lb}{in^3}$

this gives the mass of the plate as: $W := V \cdot \omega$ $\quad W = 0.018\,lb$

$P := W \cdot LF$ $\quad P = 0.738\,lbf$

Assume that the plate sees this load in two directions simultaneously

$V := P$

Prepared By	Name	Date	Engineering and Science Contract Group	File Name
	Brent Dyer	03/29/06		BP_VCJ.mcd
Checked By	C. Bala	4/11/06	*Structural Analysis Section*	Draw ing No. SEG39135726
Title	Bolts from Bushing Plate to Vacuum Case Joint			

CHECK BOLTS (NAS1352N02-6 bolts 0.086-56UNJC-3A, Material-A-286), Insert MS21209C0220L, Washer NAS1149EN232R

Flange 1: Bushing Plate
Part number: SDG39135749-001
Material: 6061-T651

Flange 2: Vacuum Case Joint
Part number: SEG39135737
Material: 7050-T7451

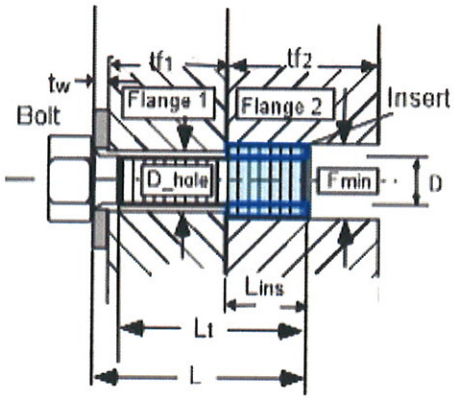

Loads - loads model 0602

Applied tensile load $P = 0.738\,lbf$

Applied shear load $V = 0.738\,lbf$

Applied bending moment $M := 0 \cdot in \cdot lbf$

Factors of Safety

Ultimate $SFu := 1.4$ Yield $SFy := 1.1$

Joint Separation $SFsep := 1.2$ Fitting factor $FF := 1.15$

Temperature data

Assembly $Temp_initial := 70 \cdot deg$

Maximum $Temp_max := 70 \cdot deg$

Minimum $Temp_min := 70 \cdot deg$

Bolt and Insert Data

Nominal diameter of bolt $D := 0.086 \cdot in$

Number of threads/inch $Nt := 56 \cdot \frac{1}{in}$

Total length of bolt $L := .375 \cdot in$

Length of insert $Lins := 0.172 \cdot in$

Threaded length $Lt := 0.375 \cdot in$

Min. external diameter of insert $Fmin := 0.110 \cdot in$

(If bolt is fully threaded, input Lt = L)

Depth of recess for insert $lr := 0.02 \cdot in$

This file uses the calculations shown in \\escfil02\2i11_mathcad\8307_bolts\thread_data.mcd
Tue Feb 15 10:38:17 AM 2005

Washer Data

Thickness of washer $tw := 0.032 \cdot in$

Outer Diameter of washer $Dw := .250in$

Inner Diameter of washer $Dwi := 0.099 \cdot in$

Bolt head dia. across flats $dw := 0.134 \cdot in$ (used only if there is no washer)

Flange data

Thickness of flange 1 $tf1 := .125 \cdot in$

Thickness of flange 2 $tf2 := .172in$ (insert length)

Diameter of hole $D_hole := 0.116 \cdot in$

Note: If there is no washer, tw, Dw, and Dwi should be zero.

Prepared By	Name	Date		File Name
	Brent Dyer	03/29/06	Engineering and Science Contract Group	BP_VCJ.mcd
Checked By	C. Bala	4/11/06	*Structural Analysis Section*	Drawing No. SEG39135726
Title	Bolts from Bushing Plate to Vacuum Case Joint			

Material Property Data

Bolt

Temperature correction factor for bolt strength ultimate $TSu_bolt := 1.0$ yield $TSy_bolt := 1.0$

Bolt ultimate tensile allowable stress $Ftu_bolt := 160000 \cdot psi$

Bolt ultimate shear allowable stress $Fsu_bolt := 0.6 \cdot Ftu_bolt$

Bolt yield tensile allowable $Fty_bolt := 120000 \cdot psi$

Temperature correction factor for bolt modulus $TE_bolt := 1.0$

Modulus of elasticity of bolt $E_bolt := \left(29.1 \cdot 10^{6} \cdot psi\right)$ Thermal coeffecient for bolt: $\alpha_bolt_hot := 8.9 \cdot 10^{-6} \cdot \frac{\frac{in}{in}}{deg}$

Insert

$\alpha_bolt_cold := 8.9 \cdot 10^{-6} \cdot \frac{\frac{in}{in}}{deg}$

Temperature correction factor for insert strength $TS_ins := 1.0$

Ultimate tensile allowable stress $Ftu_ins := 140000 \cdot psi$

Ultimate shear allowable stress $Fsu_ins := 0.6 \cdot Ftu_ins$

Washer

Temperature correction factor for washer modulus $TE_washer := 1.0$

Modulus of elasticity of washer $E_washer := \left(29.1 \cdot 10^{6} \cdot psi\right)$

Flanges

Stiffness of the joint depends upon number of members in the grip of the fasteners, Modulus of elasticity of these members, and diameters of the bolt and the washer.

Temperature correction factor for flange 1 $Tf1E := 1.0$ (modulus) $Tf2s := 1.0$ (strength)

Temperature correction factor for flange 2 $Tf2E := 1.0$ (modulus) $Fsu_f2 := 46000 \cdot psi$

Modulus of elasticity for the parts in the joint $E_flange1 := \left(9.9 \cdot 10^{6} \cdot psi\right)$ $E_flange2 := \left(10.3 \cdot 10^{6} \cdot psi\right)$

Coefficient of thermal expansion for flanges $\alpha_flange1_hot := 12.6 \cdot 10^{-6} \cdot \frac{\frac{in}{in}}{deg}$ $\alpha_flange2_hot := 12.6 \cdot 10^{-6} \cdot \frac{\frac{in}{in}}{deg}$

$\alpha_flange1_cold := 12.6 \cdot 10^{-6} \cdot \frac{\frac{in}{in}}{deg}$ $\alpha_flange2_cold := 12.6 \cdot 10^{-6} \cdot \frac{\frac{in}{in}}{deg}$

Torque/Preload data

Maximum torque (63% of yield) $Tmax := 3.6 \cdot in \cdot lbf$ Loading plane factor: $n := .5$

Minimum torque (85% of max. torque) $Tmin := 3.1 \cdot in \cdot lbf$ Preload Uncertainty: $\Gamma := 0.25$

Torque coefficient: $k := 0.15$

Prepared By	Name	Date		File Name
	Brent Dyer	03/29/06	Engineering and Science Contract Group *Structural Analysis Section*	BP_VCJ.mcd
Checked By	C. Bala	4/11/06		Draw ing No. SEG39135726
Title	Bolts from Bushing Plate to Vacuum Case Joint			

This file uses the calculations shown in \\escfil02\2i11_mathcad\8307_bolts\bolt_stiffness_insert_RevC

Mon Feb 14 12:49:24 2005

Bolt Load data

Bolt/joint stiffness factor	$\phi = 0.123$	Preload due to temperature	$Pthr_pos = 0\,lbf$
Max. preload	$PLDmax = 348.8\,lbf$		$Pthr_neg = 0\,lbf$
Min. preload	$PLDmin = 162.8\,lbf$	Uncertainty factor	$\Gamma = 0.25$
Joint separation load	$Psep = 0.886\,lbf$	Torque coefficient	$k = 0.15$
Max. load on the bolt(ultimate)	$Pb = 348.9\,lbf$	Loading plane factor	$n = 0.5$
Max. load on the bolt(yield)	$Pby = 348.9\,lbf$	Thread shear pullout load of bolt or insert	$Pths = 1943.7\,lbf$
Bolt ultimate tensile strength	$PAt = 556.6\,lbf$	Thread shear pullout load in parent metal	$Ppths = 1367.1\,lbf$

Length_check = "Bolt length is sufficient"

Summary of Margins for bolt:

Joint separation	$MS_1 = 169.308$	Direct Thread shear Ultimate	$MS_6 = 1.15 \times 10^3$
Direct Tension Ultimate	$MS_2 = 467.35$	Total Thread shear Ultimate	$MS_7 = 2.9182$
Direct Tension Yield	$MS_3 = 446.06$	Shear Ultimate	$MS_8 = 249.25$
Total Tension Ultimate	$MS_4 = 0.6$	Bending Ultimate	$MS_9 = 10$
Total Tension Yield	$MS_5 = 0.196$	Combined shear, tension and bending ultimate	$MS_{10} = 0.595$

Determination of the smallest margin of safety for the bolt, and the failure mode:

MSbolt := min(MS)

MSbolt = 0.196 Failure_Mode = "Total Tension Yield"

Prepared By	Name	Date		File Name
	Brent Dyer	03/29/06	**Engineering and Science Contract Group**	BP_VCJ.mcd
Checked By	C. Bala	4/11/06	*Structural Analysis Section*	Draw ing No. SEG39135726
Title	Bolts from Bushing Plate to Vacuum Case Joint			

Fail-safe Analysis

Assume one of the two fasteners have failed.

The remaining fastener must take the increased load (i.e., 2*P and 2*V), but must also help couple out the moment caused by the c.g. offset from the remaining fastener

Assume this moment is coupled out in contact with the Sill Joint. This is shown in the adjacent figure

$l2 := 1.2035 \cdot in \quad l3 := .188 \cdot in$

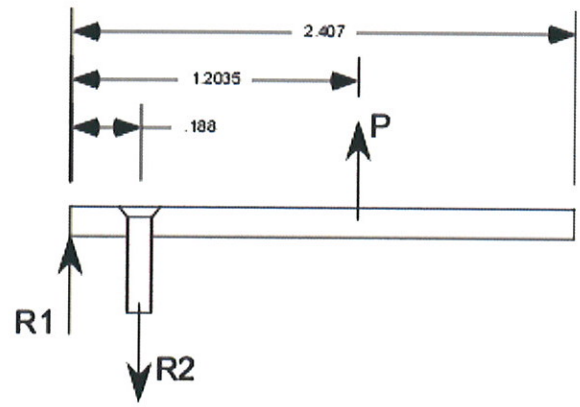

Fail-safe Loads

Applied tensile load $P_FS := P + P \cdot \frac{l2}{l3}$ $P_FS = 5.463\,lbf$

Applied shear load $V_FS := 2 \cdot V$

Applied bending moment $M_FS := 0 \cdot in \cdot lbf$

Fail-safe Factors of Safety

Ultimate $SFu_FS := 1.0$

Joint Separation $SFsep_FS := 1.0$

Mon Feb 14 12:51:39 2005

Bolt Fail-safe Load data

Joint separation load $Psep_FS = 5.463\,lbf$

Max. load on the bolt(ultimate) $Pb_FS = 349.2\,lbf$

Summary of fail-safe Margins for bolt:

Joint separation	$MS_FS_1 = 26.61$	Total Thread shear Ultimate	$MS_FS_5 = 2.91$
Direct Tension Ultimate	$MS_FS_2 = 87.59$	Shear Ultimate	$MS_FS_6 = 174.17$
Total Tension Ultimate	$MS_FS_3 = 0.59$	Bending Ultimate	$MS_FS_7 = 10$
Direct Thread shear Ultimate	$MS_FS_4 = 216.6$	Combined shear, tension and bending ultimate	$MS_FS_8 = 0.59$

Determination of the smallest fail-safe margin of safety for the bolt, and the failure mode:

$MSbolt_FS := \min(MS_FS)$

$MSbolt_FS = 0.59$ Failure_Mode_FS = "Combined Shear Tension Bending Ultimate"

2.4.1.8 Sill Plate to USS-02 Sill Joint

Prepared By	Name	Date		File Name
	Brent Dyer	03/24/06	**Engineering and Science Contract Group**	SP_Silljoint.mcd
Checked By	C. Bala	3/29/06	*Structural Analysis Section*	Draw ing No. SEG39135726
Title	Bolts from Sill Plate to Sill Joint			

The Sill Plate is used as a cover to prevent backout of the Sill Pins; thus, there are 4 total plates. Each plate is held in place with 2 .112-40 flat head screws which go into inserts in the Sill Joint.

The Plate with it's position in the USS assembly is shown below

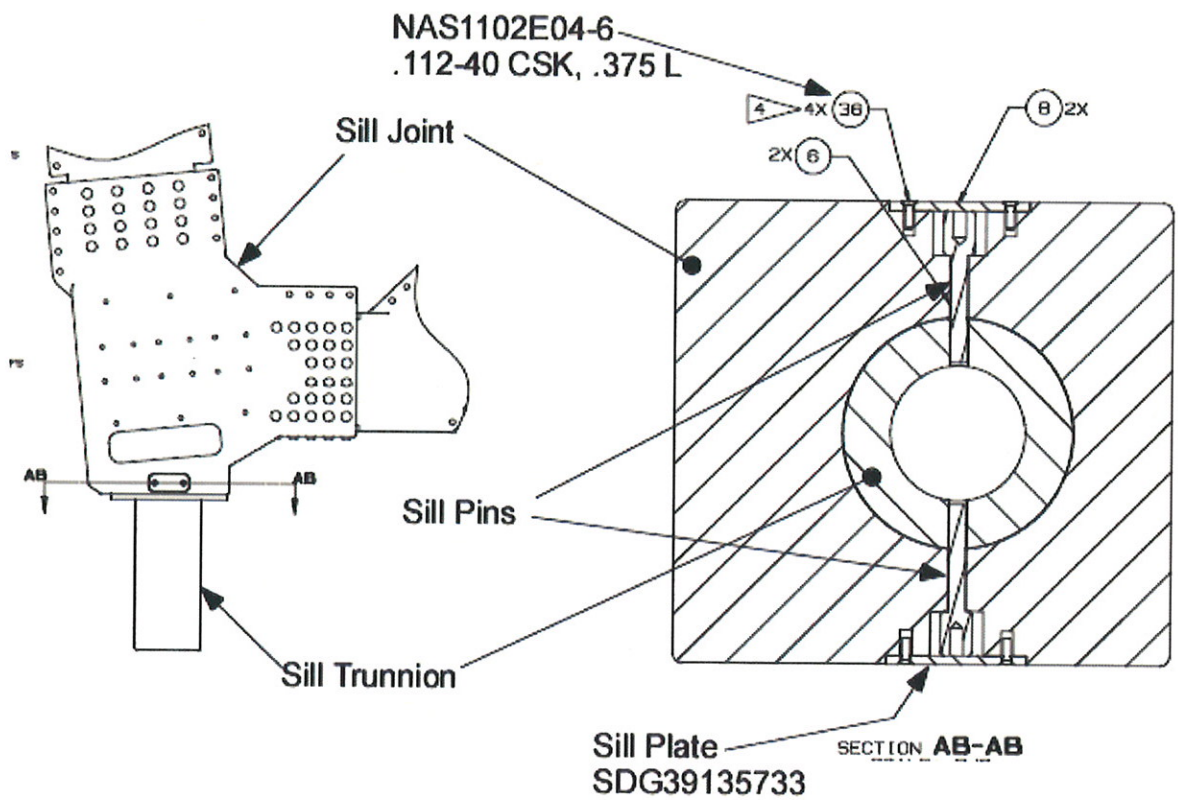

Loading on the screws will come from inertial loading of the plate. We'll use simplified design options which means we'll use 40g as the inertial load

$LF := 40 \cdot g$

Prepared By	Name	Date		File Name
	Brent Dyer	03/24/06	**Engineering and Science Contract Group**	SP_Silljoint.mcd
Checked By	C. Bala	3/29/06	*Structural Analysis Section*	Draw ing No. SEG39135726
Title	Bolts from Sill Plate to Sill Joint			

Plate is shown in the figure below.

Plate dimensions are:

$Lp := 1.98 \cdot in$

$Wp := .855 \cdot in$

$Tp := .125 \cdot in$

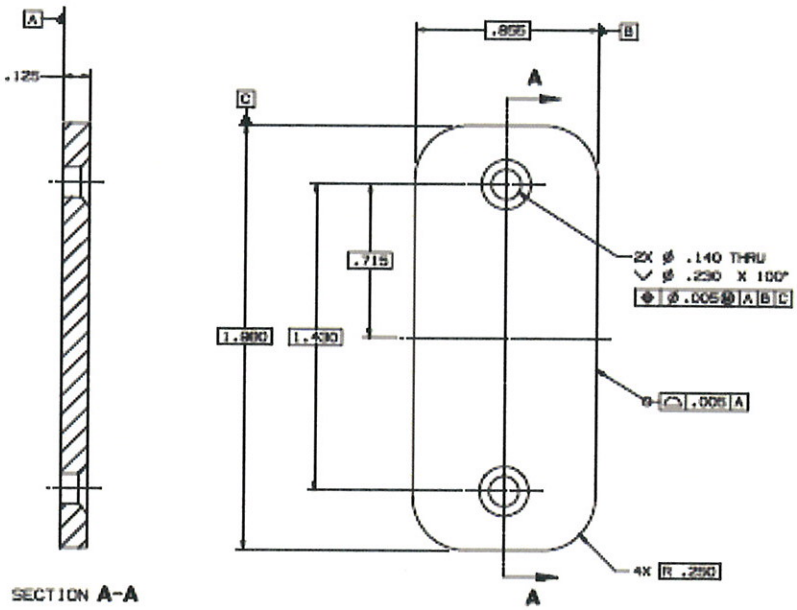

Volume of plate is therefore: $V := Lp \cdot Wp \cdot Tp$ $\quad V = 0.212\,in^3$

Plate is made of 6061-T651 aluminium. Use density as: $\omega := .098 \cdot \frac{lb}{in^3}$

this gives the mass of the plate as: $W := V \cdot \omega$ $\quad W = 0.021\,lb$

$P := W \cdot LF$ $\quad P = 0.83\,lbf$

Assume that the plate sees this load in two directions simultaneously

$V := P$

Prepared By	Name	Date	Engineering and Science Contract Group	File Name
	Brent Dyer	03/24/06		SP_Silljoint.mcd
Checked By	C. Bala	3/29/06	*Structural Analysis Section*	Draw ing No. SEG39135726
Title	Bolts from Sill Plate to Sill Joint			

CHECK BOLTS (NAS1102E04-6 bolts 0.112-40UNJC-3A, Material-A-286), Insert MS51830CA102L

Flange 1: Sill Plate
Part number: SDG39135733
Material: 6061-T651

Flange 2: Sill Joint
Part number: SEG39135730
Material: 7075-T7451

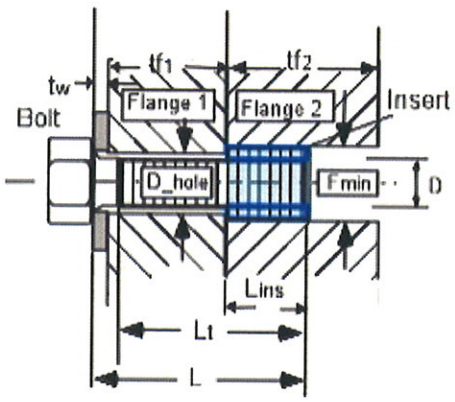

Loads - loads model 0602

Applied tensile load $P = 0.83\,lbf$

Applied shear load $V = 0.83\,lbf$

Applied bending moment $M := 0 \cdot in \cdot lbf$

Factors of Safety

Ultimate $SFu := 1.4$ Yield $SFy := 1.1$

Joint Separation $SFsep := 1.2$ Fitting factor $FF := 1.15$

Temperature data

Assembly $Temp_initial := 70 \cdot deg$

Maximum $Temp_max := 70 \cdot deg$

Minimum $Temp_min := 70 \cdot deg$

Bolt and Insert Data

Nominal diameter of bolt $D := 0.112 \cdot in$

Number of threads/inch $Nt := 40 \cdot \frac{1}{in}$

Total length of bolt $L := .375 \cdot in$

Length of insert $Lins := 0.170 \cdot in$

Threaded length $Lt := 0.317 \cdot in$

Min. external diameter of insert $Fmin := 0.134 \cdot in$

(If bolt is fully threaded, input Lt = L)

Depth of recess for insert $lr := 0.02 \cdot in$

This file uses the calculations shown in \\escfil02\2i11_mathcad\8307_bolts\thread_data.mcd
Tue Feb 15 10:38:17 AM 2005

Washer Data

Thickness of washer $tw := 0.0 \cdot in$

Outer Diameter of washer $Dw := 0.0in$

Inner Diameter of washer $Dwi := 0.0 \cdot in$

Bolt head dia. across flats $dw := 0.177 \cdot in$ (used only if there is no washer)

Flange data

Thickness of flange 1 $tf1 := .125 \cdot in$

Thickness of flange 2 $tf2 := .170in$ (insert length)

Diameter of hole $D_hole := 0.140 \cdot in$

Note: If there is no washer, tw, Dw, and Dwi should be zero.

Prepared By	Name	Date		File Name
	Brent Dyer	03/24/06	ESC GROUP	SP_Silljoint.mcd
Checked By	C. Bala	3/29/06	Engineering and Science Contract Group *Structural Analysis Section*	Draw ing No. SEG39135726
Title	Bolts from Sill Plate to Sill Joint			

Material Property Data

Bolt

Temperature correction factor for bolt strength ultimate $TSu_bolt := 1.0$ yield $TSy_bolt := 1.0$

Bolt ultimate tensile allowable stress $Ftu_bolt := 160000 \cdot psi$

Bolt ultimate shear allowable stress $Fsu_bolt := 0.6 \cdot Ftu_bolt$

Bolt yield tensile allowable $Fty_bolt := 120000 \cdot psi$

Temperature correction factor for bolt modulus $TE_bolt := 1.0$

Modulus of elasticity of bolt $E_bolt := \left(29.1 \cdot 10^{6} \cdot psi\right)$ Thermal coeffecient for bolt: $\alpha_bolt_hot := 8.9 \cdot 10^{-6} \cdot \frac{\frac{in}{in}}{deg}$

$\alpha_bolt_cold := 8.9 \cdot 10^{-6} \cdot \frac{\frac{in}{in}}{deg}$

Insert

Temperature correction factor for insert strength $TS_ins := 1.0$

Ultimate tensile allowable stress $Ftu_ins := 140000 \cdot psi$

Ultimate shear allowable stress $Fsu_ins := 0.6 \cdot Ftu_ins$

Washer

Temperature correction factor for washer modulus $TE_washer := 1.0$

Modulus of elasticity of washer $E_washer := \left(29.1 \cdot 10^{6} \cdot psi\right)$

Flanges

Stiffness of the joint depends upon number of members in the grip of the fasteners,
Modulus of elasticity of these members, and diameters of the bolt and the washer.

Temperature correction factor for flange 1 $Tf1E := 1.0$ (modulus) $Tf2s := 1.0$ (strength)

Temperature correction factor for flange 2 $Tf2E := 1.0$ (modulus) $Fsu\ f2 := 44000 \cdot psi$

Modulus of elasticity for the parts in the joint $E_flange1 := \left(10.3 \cdot 10^{6} \cdot psi\right)$ $E_flange2 := \left(10.3 \cdot 10^{6} \cdot psi\right)$

Coefficient of thermal expansion for flanges $\alpha_flange1_hot := 12.6 \cdot 10^{-6} \cdot \frac{\frac{in}{in}}{deg}$ $\alpha_flange2_hot := 12.6 \cdot 10^{-6} \cdot \frac{\frac{in}{in}}{deg}$

$\alpha_flange1_cold := 12.6 \cdot 10^{-6} \cdot \frac{\frac{in}{in}}{deg}$ $\alpha_flange2_cold := 12.6 \cdot 10^{-6} \cdot \frac{\frac{in}{in}}{deg}$

Torque/Preload data

Maximum torque (69% of yield) $Tmax := 7.9 \cdot in \cdot lbf$ Loading plane factor: $n := .5$

Minimum torque (85% of max. torque) $Tmin := 6.7 \cdot in \cdot lbf$ Preload Uncertainty: $\Gamma := 0.25$

Torque coefficient: $k := 0.15$

Prepared By	Name	Date		File Name
	Brent Dyer	03/24/06	Engineering and Science Contract Group *Structural Analysis Section*	SP_Silljoint.mcd
Checked By	C. Bala	3/28/06		Draw ing No. SEG39135726
Title	Bolts from Sill Plate to Sill Joint			

This file uses the calculations shown in \\escfil02\2i11_mathcad\8307_bolts\bolt_stiffness_insert_RevC

Mon Feb 14 12:49:24 2005

Bolt Load data

Bolt/joint stiffness factor	$\phi = 0.41$	Preload due to temperature	$Pthr_pos = 0\ lbf$
Max. preload	$PLDmax = 587.8\ lbf$		$Pthr_neg = 0\ lbf$
Min. preload	$PLDmin = 269.7\ lbf$	Uncertainty factor	$\Gamma = 0.25$
Joint separation load	$Psep = 0.995\ lbf$	Torque coefficient	$k = 0.15$
Max. load on the bolt(ultimate)	$Pb = 588.1\ lbf$	Loading plane factor	$n = 0.5$
Max. load on the bolt(yield)	$Pby = 588\ lbf$	Thread shear pullout load of bolt or insert	$Pths = 2907.3\ lbf$
Bolt ultimate tensile strength	$PAt = 910.7\ lbf$	Thread shear pullout load in parent metal	$Ppths = 1574.4\ lbf$

Length_check = "Bolt length is sufficient"

Summary of Margins for bolt:

Joint separation	$MS_1 = 295.350$	Direct Thread shear Ultimate	$MS_6 = 1.18 \times 10^3$
Direct Tension Ultimate	$MS_2 = 680.92$	Total Thread shear Ultimate	$MS_7 = 1.6773$
Direct Tension Yield	$MS_3 = 649.92$	Shear Ultimate	$MS_8 = 356.03$
Total Tension Ultimate	$MS_4 = 0.55$	Bending Ultimate	$MS_9 = 10$
Total Tension Yield	$MS_5 = 0.162$	Combined shear, tension and bending ultimate	$MS_{10} = 0.549$

Determination of the smallest margin of safety for the bolt, and the failure mode:

$MSbolt := \min(MS)$

$MSbolt = 0.162$ Failure_Mode = "Total Tension Yield"

Prepared By	Name	Date		File Name
	Brent Dyer	03/24/06	Engineering and Science Contract Group	SP_Silljoint.mcd
Checked By	C. Bala	3/29/06	*Structural Analysis Section*	Draw ing No. SEG39135726
Title	Bolts from Sill Plate to Sill Joint			

Fail-safe Analysis

Assume one of the two fasteners have failed.

The remaining fastener must take the increased load (i.e., 2*P and 2*V), but must also help couple out the moment caused by the c.g. offset from the remaining fastener

Assume this moment is coupled out in contact with the Sill Joint. This is shown in the adjacent figure

$l2 := .99 \cdot in$ $\quad l3 := .275 \cdot in$

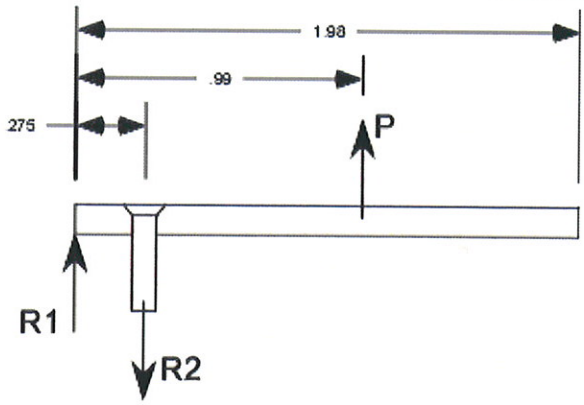

Fail-safe Loads

Applied tensile load $\quad P_FS := P + P \cdot \frac{l2}{l3}$ $\quad P_FS = 3.816\,lbf$

Applied shear load $\quad V_FS := 2 \cdot V$

Applied bending moment $\quad M_FS := 0 \cdot in \cdot lbf$

Fail-safe Factors of Safety

Ultimate $\quad SFu_FS := 1.0$

Joint Separation $\quad SFsep_FS := 1.0$

This file uses the calculations shown in \\escfil02\2i11_mathcad\8307_bolts\bolt_stiffness_insert_FS_RevC

Mon Feb 14 12:51:39 2005

Bolt Fail-safe Load data

Joint separation load $\quad Psep_FS = 3.816\,lbf$

Max. load on the bolt(ultimate) $\quad Pb_FS = 588.7\,lbf$

Summary of fail-safe Margins for bolt:

Joint separation	$MS_FS_1 = 76.31$	Total Thread shear Ultimate	$MS_FS_5 = 1.67$
Direct Tension Ultimate	$MS_FS_2 = 206.54$	Shear Ultimate	$MS_FS_6 = 248.92$
Total Tension Ultimate	$MS_FS_3 = 0.55$	Bending Ultimate	$MS_FS_7 = 10$
Direct Thread shear Ultimate	$MS_FS_4 = 357.79$	Combined shear, tension and bending ultimate	$MS_FS_8 = 0.55$

Determination of the smallest fail-safe margin of safety for the bolt, and the failure mode:

$MSbolt_FS := \min(MS_FS)$

$MSbolt_FS = 0.55$ $\quad$ Failure_Mode_FS = "Combined Shear Tension Bending Ultimate"

2.4.2 Lower USS-02 Bolted Interfaces

Lower USS-02 Bolted Interfaces

The Lower USS-02 Bolt Analysis is performed in the following report sections.

2.4.2.1	Lower USS to Upper USS
2.4.2.1	Lower USS to Upper USS Fail-Safe
2.4.2.1	Lower USS to Upper USS Fail-Safe (Shear Pin Failure)
2.4.2.2	Lower Angle Beam Flange to Cenerbody Box Joint
2.4.2.2	Lower Angle Beam Flange to Centerbody Box Joint Fail-Safe

2.4.2.1 Lower USS to Upper USS

Lower USS-02 to Upper USS-02 Bolt Analysis

The USS-02 assembly consists of four Lower Vaccum Case (VC) Joints. There are a total of 8 fasteners attaching the Lower USS-02 joint to the Lower Vacuum Case joint. The fasteners are NAS1958C (180 ksi), 0.50-20 UNFJ. There is also one shear pin 0.875" in diameter. The drawing number for the USS-02 Assembly to Vaccuum Case Assembly is SDG39135724.

Bolt Geometry

size thread/in

$$bolt := \begin{pmatrix} 0.50 & 20 \\ 0.50 & 20 \\ 0.50 & 20 \\ 0.50 & 20 \\ 0.50 & 20 \\ 0.50 & 20 \\ 0.50 & 20 \\ 0.50 & 20 \end{pmatrix}$$

$i := 1 .. rows(bolt)$

$N_i := bolt_{i,2} \cdot \frac{1}{in}$ pitch of bolt

$D_i := bolt_{i,1} \cdot in$ bolt diameter

Tensile Area of bolt

$$At_i := \beta \cdot \left(\frac{D_i - 0.9743 \cdot \frac{1}{N_i}}{2} \right)^2$$

Shear Area of bolt

$$As_i := \beta \cdot \left(\frac{D_i - 1.299038 \cdot \frac{1}{N_i}}{2} \right)^2$$

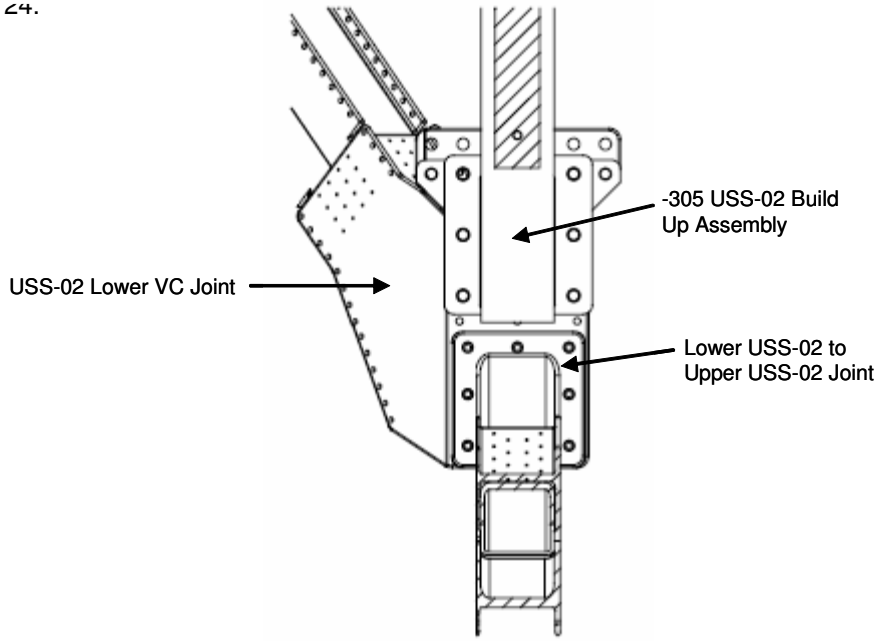

View of USS-02 Build Up Assembly and USS-02 Lower/Upper Joints Assembly

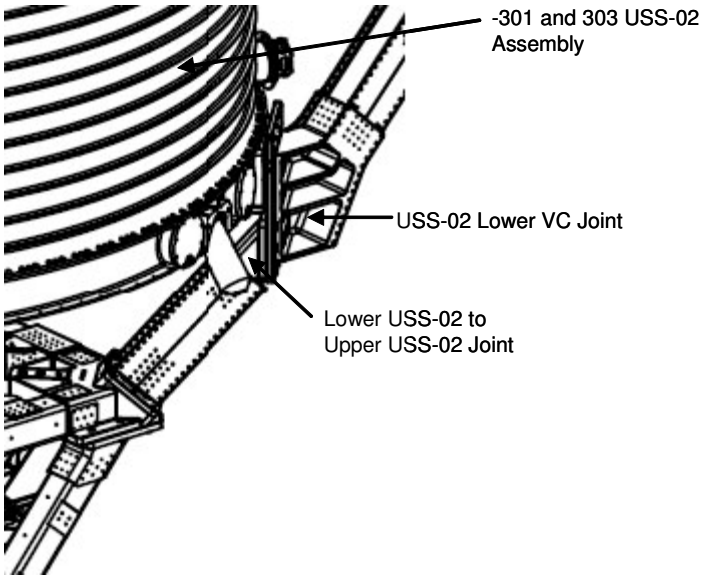

View of USS-02 Assembly and USS-02 Lower/Upper Joints Assembly

Prepared By	Name	Date	Engineering and Science Contract Group	File Name
	Brent Dyer	10/06/05		LwUSS_upUSS_r3.mcd
Checked By	John Krejci		*Structural Analysis Section*	Drawing No. SDG39135724
Title	Bolts from Lower USS-02 to Upper USS-02			

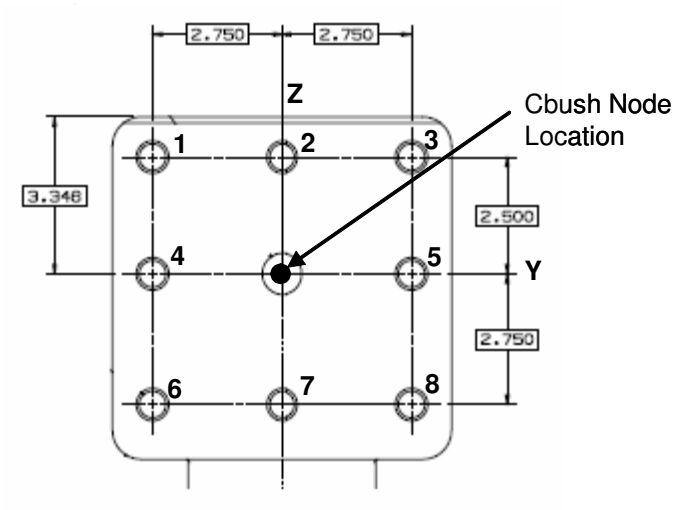

Lower VC Joint to Lower/Upper USS-02 Bolt Pattern

Bolt no. x co-ord y co-ord z co-ord

$$\begin{pmatrix}1\\2\\3\\4\\5\\6\\7\\8\end{pmatrix} \quad x := \begin{pmatrix}0.0\\0.0\\0.0\\0.0\\0.0\\0.0\\0.0\\0.0\end{pmatrix}\cdot in \quad y := \begin{pmatrix}-2.75\\0.0\\2.75\\-2.75\\2.75\\-2.75\\0.0\\2.75\end{pmatrix}\cdot in \quad z := \begin{pmatrix}2.50\\2.50\\2.50\\0.0\\0.0\\-2.75\\-2.75\\-2.75\end{pmatrix}\cdot in$$

<u>Location of applied forces and moments</u>

$xforce := 0.0in \qquad yforce := 0.0in \qquad zforce := 0.0in$

$$cgload := \begin{pmatrix}xforce\\yforce\\zforce\end{pmatrix} \qquad cgload = \begin{pmatrix}0\\0\\0\end{pmatrix} in$$

Center of gravity of bolt group

$$xcg := \frac{\sum_i x_i}{rows(x)} \qquad xcg = 0\,in \qquad ycg := \frac{\sum_i y_i}{rows(y)} \qquad ycg = 0\,in \qquad zcg := \frac{\sum_i z_i}{rows(z)} \qquad zcg = -0.094\,in$$

$$cg_{bolt} := \begin{pmatrix} xcg \\ ycg \\ zcg \end{pmatrix} \qquad cg_{bolt} = \begin{pmatrix} 0 \\ 0 \\ -0.094 \end{pmatrix} in$$

Note: Since the x direction is into the plate the loads are shared equally between the bolts. The bolt pattern is symmetric about the y-axis with a zero offset from the center of gravity. However, in the z direction the bolt pattern is unsymmetric and has a .094" offset from the center of gravity.

Load Vector

$$r_{load} := cgload - cg_{bolt} \qquad r_{load} = \begin{pmatrix} 0 \\ 0 \\ 0.094 \end{pmatrix} in$$

Distance from CG of Bolts to Individual Bolts for shear calculations

$$r_i := \sqrt{(z_i - zcg)^2 + (y_i - ycg)^2} \qquad r = \begin{pmatrix} 3.780 \\ 2.594 \\ 3.780 \\ 2.752 \\ 2.752 \\ 3.823 \\ 2.656 \\ 3.823 \end{pmatrix} in$$

Loads model 2-04 was used to retrieve loads at the four bolted interfaces. A Cbush element located at the center of each Lower USS-02 joint was post processed in NASPOST for forces and moments in the x, y, and z directions. The Cbush element identifications for the four bolted interfaces are 66041, 66042. 66043, and 66044. These loads are read into an array and distributed out to the 8 bolts for each interface plate.

(Note: This joint was checked for minimum margins of safety for launch, nominal landing, and abort landing load cases. The nominal landing cases combined with nominal landing temperature data resulted in the lowest minimimum margins of safety. Therefore, the nominal landing cases are used in this analysis.)

Reading database file for bolted joint, nominal landing case

data := READPRN("lowerussvcf_r2_nomland.txt")

j := 1 .. rows(data)

num_bolts := rows(bolt)

Loads from 2-04 loads model, nominal landing case

Axial Load $Fx_j := data_{j,3} \cdot lbf$

Shear in Y axis $Fy_j := data_{j,4} \cdot lbf$

Shear in Z axis $Fz_j := data_{j,5} \cdot lbf$

Element Identification $ID_j := data_{j,1}$

Load Case Number $LC_j := data_{j,2}$

Torsion $Mx_j := data_{j,6} \cdot in \cdot lbf$

Moment about Y axis $My_j := data_{j,7} \cdot in \cdot lbf$

Moment about Z axis $Mz_j := data_{j,8} \cdot in \cdot lbf$

$ID_j := ID_j \cdot 1000 + 1$ Counter for number of bolts in pattern

Applied Bending Moment at Bolts $M_j := 0 \cdot in \cdot lbf$

Format of Output File

The stack commands below are used to stack the element identifications (ID) and load cases (LC) in asending order per bolt. The element ID number is located in the first column and the LC numbers in the second column. For each element identification, 66041, 66042, 66043, and 66044, the bolt number within the bolt pattern is added to the end of each element identification. For example, the element identification number 66041 will have bolt numbers 1 thru 8 attached to the end for all 64 load cases. This brings the total number of load cases to 2048 (4 joints x 8 bolts x 64 load cases = 2048). See the array example to the right.

$$ID := stack(ID, ID+1, ID+2, ID+3, ID+4, ID+5, ID+6, ID+7)$$

$$LC := stack(LC, LC, LC, LC, LC, LC, LC, LC)$$

$$\begin{array}{cc} ID & LC \\ \end{array}$$
$$\begin{bmatrix} 6604101 & 4001 \\ 6604101 & 4002 \\ \ldots & \ldots \\ 6604101 & 4064 \\ 6604102 & 4001 \\ 6604102 & 4002 \\ \ldots & \ldots \\ 6604102 & 4064 \\ \ldots & \ldots \\ \ldots & \ldots \\ 6604108 & 4001 \\ 6604108 & 4002 \\ \ldots & \ldots \\ 6604108 & 4064 \end{bmatrix}$$

Array Example

Moment Distribution

$$M_{tot}^{\langle j \rangle} := \begin{pmatrix} Mx_j \\ My_j \\ Mz_j \end{pmatrix} + r_{load} \times \begin{pmatrix} Fx_j \\ Fy_j \\ Fz_j \end{pmatrix}$$

Use the cross-product to determine the additional moments acting on the fasteners.

$Mx_boltcg_j := M_{tot_{1,j}}$ $\quad$ $My_boltcg_j := M_{tot_{2,j}}$ $\quad$ $Mz_boltcg_j := M_{tot_{3,j}}$

Tension on bolts

$$Ftdirect_{i,j} := \begin{cases} 0 \cdot lbf & \text{if } Fx_j \le 0lbf \\ \dfrac{Fx_j}{num_bolts} & \text{otherwise} \end{cases}$$

Direct tensile load calculation - (The if statement checks for compression)

$$Fmz_{i,j} := \begin{cases} 0 \cdot lbf & \text{if } (y_i - ycg) = 0 \cdot in \\ \dfrac{\left[Mz_boltcg_j \cdot (y_i - ycg)\right] At_i}{\sum_i \left[(y_i - ycg)^2 \cdot At_i\right]} & \end{cases}$$

$$Fmy_{i,j} := \begin{cases} 0 \cdot lbf & \text{if } (z_i - zcg) = 0 \cdot in \\ \dfrac{My_boltcg_j \cdot (z_i - zcg) \cdot At_i}{\sum_i \left[\left(\left|z_i - zcg\right|\right)^2 \cdot At_i\right]} & \end{cases}$$

$$Ft_{i,j} := Ftdirect_{i,j} + Fmz_{i,j} + Fmy_{i,j}$$

Total Tensile load

Shear on bolts

Secondary shear on bolts $\quad Fs_{i,j} := \dfrac{Mx_boltcg_j \cdot r_i \cdot As_i}{\sum_i \left[(r_i)^2 \cdot (As_i)\right]}$

Total shear load $\quad Fstot_{i,j} := Fs_{i,j}$

(Note: The direct shear is taken by the shear pin.)

The stack commands below are used to stack applied axial load (P), applied shear load (V), and applied moment (M) in asending order per bolt. These loads are put into an array with the element/bolt number and load case number from above. See the "Output" file below.

$$P := \text{stack}\left[\left(Ft^T\right)^{\langle 1\rangle}, \left(Ft^T\right)^{\langle 2\rangle}, \left(Ft^T\right)^{\langle 3\rangle}, \left(Ft^T\right)^{\langle 4\rangle}, \left(Ft^T\right)^{\langle 5\rangle}, \left(Ft^T\right)^{\langle 6\rangle}, \left(Ft^T\right)^{\langle 7\rangle}, \left(Ft^T\right)^{\langle 8\rangle}\right]$$

$$V := \text{stack}\left[\left(Fstot^T\right)^{\langle 1\rangle}, \left(Fstot^T\right)^{\langle 2\rangle}, \left(Fstot^T\right)^{\langle 3\rangle}, \left(Fstot^T\right)^{\langle 4\rangle}, \left(Fstot^T\right)^{\langle 5\rangle}, \left(Fstot^T\right)^{\langle 6\rangle}, \left(Fstot^T\right)^{\langle 7\rangle}, \left(Fstot^T\right)^{\langle 8\rangle}\right]$$

$$M := \text{stack}(M, M, M, M, M, M, M, M)$$

The "Output" file below outputs an array from left to right starting with the element identification (ID), Load case number (LC), applied load on the bolt (P), applied shear on the bolt (V), and applied moment on the bolt (M). See the output array example below. The array is then written to a text file.

$$\text{Output} := \text{augment}\left(ID, LC, \frac{P}{lbf}, \frac{V}{lbf}, \frac{M}{in \cdot lbf}\right)$$

(Note: Since the ID and LC numbers are dimensionless, the P, V, and M values are divided by their units in order to make the array dimensionless.)

$$\begin{array}{ccccc} ID & LC & P & V & M \end{array}$$
$$\begin{bmatrix} 6604101 & 4001 & -1068.05 & -358.78 & 0 \\ 6604101 & 4002 & -1110.33 & -465.51 & 0 \\ \ldots & \ldots & \ldots & \ldots & \ldots \\ 6604101 & 4064 & -699.99 & -439.08 & 0 \\ 6604102 & 4001 & -813.60 & -263.63 & 0 \\ 6604102 & 4002 & -977.16 & -342.06 & 0 \\ \ldots & \ldots & \ldots & \ldots & \ldots \\ 6604102 & 4064 & -658.71 & -322.63 & 0 \\ \ldots & \ldots & \ldots & \ldots & \ldots \\ \ldots & \ldots & \ldots & \ldots & \ldots \\ 6604108 & 4001 & 1470.8 & -358.78 & 0 \\ 6604108 & 4002 & 1166.08 & -465.51 & 0 \\ \ldots & \ldots & \ldots & \ldots & \ldots \\ 6604108 & 4064 & 699.99 & -439.07 & 0 \end{bmatrix}$$

Size of the "Output" Array: $\text{rows}(\text{Output}) = 2048$

(8 bolts x 64 load cases) x 4 joints = 2048 load cases

(Note: The output array to the left is an example of the array format. The loads in this example are for format purposes only and should NOT be used in this analysis.)

Example of Output Array

$\text{WRITEPRN}(\text{"output_forces_lowerussvcf_r2_nomland.txt"}) := \text{Output}$

Prepared By	Name	Date		File Name
	Brent Dyer	10/06/05	Engineering and Science Contract Group	LwUSS_upUSS_r3.mcd
Checked By	John Krejci		*Structural Analysis Section*	Draw ing No. SDG39135724
Title	Bolts from Lower USS-02 to Upper USS-02			

CHECK BOLTS (bolts SDG39135892-805, NAS1958C15, 0.500-20UNJF-3A, Material-A-286), Insert MS51831CA206, Washer NAS1587-8C

data := READPRN("output_forces_lowerussvcf_r2_nomland.txt")

s := 1 .. rows(data)

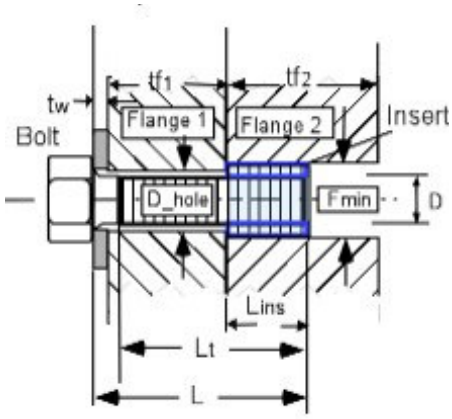

Flange 1: Lower VC Joint
Part number: SDG39135737
Material: 7050-T7451

Flange 2: Lower USS to Upper USS Joint
Part number: SDG39135762
Material: 7050-T7451

Loads

Applied tensile load $P_s := data_{s,3} \cdot lbf$

Applied shear load $V_s := data_{s,4} \cdot lbf$

Applied bending moment $M_s := data_{s,5} \cdot in \cdot lbf$

Element Identification $ID_s := data_{s,1}$

Load Case Number $LC_s := data_{s,2}$

Factors of Safety

Ultimate $SFu := 1.4$

Yield $SFy := 1.1$

Joint Separation $SFsep := 1.2$

Fitting factor $FF := 1.15$

Temperature Data (Ref Appendix C2), Nominal Landing Case

Assembly $Temp_initial := 70 \cdot deg$

Maximum $Temp_max := 161 \cdot deg$

Minimum $Temp_min := -41 \cdot deg$

Bolt and Insert Data

Nominal diameter of bolt $D := 0.500 \cdot in$

Total length of bolt $L := 1.673 \cdot in$

Threaded length $Lt := 0.735 \cdot in$

(If bolt is fully threaded, input Lt = L)

Number of threads/inch $Nt := 20 \cdot \frac{1}{in}$

Length of insert $Lins := 0.688 \cdot in$

Min. external diameter of insert $Fmin := 0.615 \cdot in$

Depth of recess for insert $lr := 0.02 \cdot in$

This file uses the calculations shown in \\escfil02\2i11_mathcad\8307_bolts\thread_data.mcd

Thread Data File

Washer Data

Thickness of washer $tw := 0.078 \cdot in$

Outer Diameter of washer $Dw := .875in$

Inner Diameter of washer $Dwi := 0.515 \cdot in$

Bolt head dia. across flats (used only if there is no washer) $dw := 0.710 \cdot in$

Note: If there is no washer, tw, Dw, and Dwi should be zero.

Flange data

Thickness of flange 1 (Ref. SDG39135737) $tf1 := .750 \cdot in$

Thickness of flange 2 (Ref. SDG39135737) $tf2 := .688in$ (insert length)

Diameter of hole $D_hole := 0.562 \cdot in$

Material Property Data

Bolt

Temperature correction factor for bolt strength ultimate (Ref. MIL-HDBK-5J, fig. 6.2.1.1.1) $TSu_bolt := .97$ yield $TSy_bolt := .97$

Bolt ultimate tensile allowable stress $Ftu_bolt := 180000 \cdot psi$ (Ref. NAS1958)

Bolt ultimate shear allowable stress $Fsu_bolt := 0.6 \cdot Ftu_bolt$

Bolt yield tensile allowable $Fty_bolt := 132353 \cdot psi$ (Ref. Appendix C10)

Temperature correction factor for bolt modulus $TE_bolt := .97$ (Ref. MIL-HDBK-5J, fig. 6.2.1.1.4(a))

Modulus of elasticity of bolt $E_bolt := \left(29.1 \cdot 10^{6} \cdot psi\right)$ (Ref. MIL-HDBK-5J, table 6.2.1.0(b))

Thermal coeffecient for bolt: (Ref. MIL-HDBK-5J, fig. 6.2.1.0) $u_bolt_hot := 9.1 \cdot 10^{-6} \cdot \frac{\frac{in}{in}}{deg}$ $u_bolt_cold := 8.6 \cdot 10^{-6} \cdot \frac{\frac{in}{in}}{deg}$

Insert

Temperature correction factor for insert strength $TS_ins := .97$ (Ref. MIL-HDBK-5J, fig. 6.2.1.1.1)

Ultimate tensile allowable stress $Ftu_ins := 140000 \cdot psi$ (Ref. MS51831)

Ultimate shear allowable stress $Fsu_ins := 0.6 \cdot Ftu_ins$

Washer

Temperature correction factor for washer modulus $TE_washer := .97$ (Ref. MIL-HDBK-5J, fig. 6.2.1.1.1)

Modulus of elasticity of washer $E_washer := \left(29.1 \cdot 10^{6} \cdot psi\right)$ (Ref. MIL-HDBK-5J, table 6.2.1.0(b))

Flanges

Stiffness of the joint depends upon number of members in the grip of the fasteners, Modulus of elasticity of these members, and diameters of the bolt and the washer.

Temperature correction factor for flange 1 $Tf1E := .95$ (modulus) (Ref. MIL-HDBK-5J, fig. 3.7.6.1.4 and Appendix C9)

Temperature correction factor for flange 2 $Tf2E := .95$ (modulus)

$Tf2s := .89$ (strength) (Ref. MIL-HDBK-5J, fig. 3.7.4.2.1)

Shear Strength Allowable for flanges $Fsu_f2 := 44000 \cdot psi$ (Ref. MIL-HDBK-5J, table 3.7.4.0(b1))

Modulus of elasticity for the parts in the joint (Ref. MIL-HDBK-5J, table 3.7.4.0(b1))

$E_flange1 := \left(10.3 \cdot 10^{6} \cdot psi\right)$ $E_flange2 := \left(10.3 \cdot 10^{6} \cdot psi\right)$

Coefficient of thermal expansion for flanges (Ref. MIL-HDBK-5J, table 3.7.4.0(b1) and Appendix C9)

$u_flange1_hot := 12.8 \cdot 10^{-6} \cdot \frac{\frac{in}{in}}{deg}$ $u_flange2_hot := 12.8 \cdot 10^{-6} \cdot \frac{\frac{in}{in}}{deg}$

$u_flange1_cold := 12.1 \cdot 10^{-6} \cdot \frac{\frac{in}{in}}{deg}$ $u_flange2_cold := 12.1 \cdot 10^{-6} \cdot \frac{\frac{in}{in}}{deg}$

Torque/Preload data

Maximum torque (63% of yield) $Tmax := 1000 \cdot in \cdot lbf$

Minimum torque (95% of max. torque) $Tmin := 950 \cdot in \cdot lbf$

Torque coefficient: $k := 0.15$

Loading plane factor: $n := .5$

Preload Uncertainty: $:= 0.25$

This file uses the calculations shown in \\escfil02\2i11_mathcad\8307_bolts\multi_bolt_stiffness_insert_RevC

Insert Stiffness File

Prepared By	Name	Date		File Name
	Brent Dyer	10/06/05		LwUSS_upUSS_r3.mcd
Checked By	John Krejci		**Engineering and Science Contract Group** *Structural Analysis Section*	Drawing No. SDG39135724
Title	Bolts from Lower USS-02 to Upper USS-02			

Bolt Load data

Bolt/joint stiffness factor	$= = 0.407$	Preload due to temperature	$Pthr_pos = 1285.2\,lbf$
Max. preload	$PLDmax = 17951.8\,lbf$		$Pthr_neg = -1482.9\,lbf$
Min. preload	$PLDmin = 7183.8\,lbf$	Uncertainty factor	$= 0.25$
Joint separation load	$max(Psep) = 7362.823\,lbf$	Torque coefficient	$k = 0.15$
Max. load on the bolt(ultimate)	$max(Pb) = 19961.9\,lbf$	Loading plane factor	$n = 0.5$
Max. load on the bolt(yield)	$max(Pby) = 19531.2\,lbf$	Thread shear pullout load of bolt or insert	$Pths = 49363.6\,lbf$
Bolt ultimate tensile strength	$PAt = 27425.9\,lbf$	Thread shear pullout load in parent metal	$Ppths = 26027.1\,lbf$

Length_check = "Bolt length is sufficient"

Summary of Margins for bolt:

Joint separation	$MS_min_{1,1} = 0.065$	Direct Thread shear Ultimate	$MS_min_{6,1} = 1.635$
Direct Tension Ultimate	$MS_min_{2,1} = 1.776$	Total Thread shear Ultimate	$MS_min_{7,1} = 0.304$
Direct Tension Yield	$MS_min_{3,1} = 1.598$	Shear Ultimate	$MS_min_{8,1} = 2.28$
Total Tension Ultimate	$MS_min_{4,1} = 0.374$	Bending Ultimate	$MS_min_{9,1} = 10$
Total Tension Yield	$MS_min_{5,1} = 0.033$	Combined shear, tension and bending ultimate	$MS_min_{10,1} = 0.327$

Determination of the smallest margin of safety for the bolt, and the failure mode:

$MSbolt := min(MS)$

$MSbolt = 0.033$ Minimum Margin of Safety

Failure_Mode = "Total Tension Yield"

$MS_min_ID = 66041008$ Element Identification (66041) and Bolt Number (8) for Minimum Margin

$MS_min_LC = 4015$ Load Case Number for Minimum Margin

$MS_min_P = 6135.7$ Applied Tensile Load for Minimum Margin

$MS_min_V = -2951.7$ Applied Shear Load for Minimum Margin

$MS_min_M = 0$ Applied Bending Moment for Minimum Margin

Fail-Safe Analysis for Lower USS-02 to Upper USS-02 (Shear Pin Failure)

This portion of the analysis assumes a failure in the shear pin. The shear pin part number is SDG39135755-003. All 8 NAS1958 fasteners will take the direct shear load.

Direct shear Loads $\quad Fsd_{i,j} := \dfrac{\sqrt{\left(Fy_j\right)^2 + \left(Fz_j\right)^2}}{num_bolts}$

Total shear load $\quad Fstot_{i,j} := Fs_{i,j} + Fsd_{i,j}$

(Note: The Fs variable is the secondary shear and calculated above.)

The stack command below is used to stack the applied shear load (V) in asending order per bolt. The applied axial load (P) and applied moment (M) are stacked above and reused in the output file below. These loads are put into an array with the element/bolt number and load case number from above.

$$V := stack\left[\left(Fstot^T\right)^{\langle 1\rangle}, \left(Fstot^T\right)^{\langle 2\rangle}, \left(Fstot^T\right)^{\langle 3\rangle}, \left(Fstot^T\right)^{\langle 4\rangle}, \left(Fstot^T\right)^{\langle 5\rangle}, \left(Fstot^T\right)^{\langle 6\rangle}, \left(Fstot^T\right)^{\langle 7\rangle}, \left(Fstot^T\right)^{\langle 8\rangle}\right]$$

The "Output" file below outputs an array from left to right starting with the element identification (ID), Load case number (LC), applied load on the bolt (P), applied shear on the bolt (V), and applied moment on the bolt (M). The array is written to a text file. For the format of the array see the output example array above.

$$Output := augment\left(ID, LC, \frac{P}{lbf}, \frac{V}{lbf}, \frac{M}{in \cdot lbf}\right)$$

(Note: Since the ID and LC numbers are dimensionless, the P, V, and M values are divided by their units in order to make the array dimensionless.)

Size of the "Output" Array: $\quad rows(Output) = 2048$

(8 bolts x 64 load cases) x 4 joints = 2048 load cases

WRITEPRN("output_forces_lowerussvcf_r2_nomland_pinfs.txt") := Output

Fail-safe Analysis (Shear Pin Failure)

The array from the text file above is read:

data_fsp := READPRN("output_forces_lowerussvcf_r2_nomland_pinfs.txt")

$s := 1 .. rows(data_fsp)$

Fail-safe Loads, nominal landing

Applied tensile load $P_FS_s := data_fsp_{s,3} \cdot lbf$ $ID_FS_s := data_fsp_{s,1}$

Applied shear load $V_FS_s := data_fsp_{s,4} \cdot lbf$ $LC_FS_s := data_fsp_{s,2}$

Applied bending moment $M_FS_s := data_fsp_{s,5} \cdot in \cdot lbf$

Fail-safe Factors of Safety

Ultimate $SFu_FS := 1.0$

Joint Separation $SFsep_FS := 1.0$

This file uses the calculations shown in \\escfil02\2i11_mathcad\8307_bolts\ multi_bolt_stiffness_insert_FS_RevC

Fail Safe Stiffness File

Bolt Fail-safe Load data

Joint separation load $\max(Psep_FS) = 6135.686\,lbf$

Max. load on the bolt(ultimate) $\max(Pb_FS) = 19387.6\,lbf$

Summary of fail-safe Margins for bolt:

Joint separation	$MS_minFS_{1,1} = 0.278$	Total Thread shear Ultimate	$MS_minFS_{5,1} = 0.342$
Direct Tension Ultimate	$MS_minFS_{2,1} = 2.887$	Shear Ultimate	$MS_minFS_{6,1} = 1.74$
Total Tension Ultimate	$MS_minFS_{3,1} = 0.415$	Bending Ultimate	$MS_minFS_{7,1} = 10$
Direct Thread shear Ultimate	$MS_minFS_{4,1} = 2.69$	Combined shear, tension and bending ultimate	$MS_minFS_{8,1} = 0.3489$

Determination of the smallest fail-safe margin of safety for the bolt, and the failure mode:

$MSbolt_FS := \min(MS_FS)$

$MSbolt_FS = 0.278$ Failure_Mode_FS = "Joint Separation"

$MS_min_ID = 66041008$ Element Identification (66041) and Bolt Number (8) for Minimum Margin

$MS_min_LC = 4015$ Load Case Number for Minimum Margin

$MS_min_P = 6135.7$ Applied Tensile Load for Minimum Margin

$MS_min_V = -641$ Applied Shear Load for Minimum Margin

$MS_min_M = 0.0$ Applied Bending Moment for Minimum Margin

Bolt Fail-Safe Analysis for Lower USS-02 to Upper USS-02

Since bolt number 8 has the lowest margin of safety it is assumed that this bolt will be the first bolt to fail. There are now 7, NAS1958C15 0.50-20 UNFJ fasteners, holding the lower USS to the lower vacuum case joint. The drawing number for the USS-02 Assembly to Vaccuum Case Assembly is SDG39135724.

size thread/in

$$bolt2 := \begin{pmatrix} 0.500 & 20 \\ 0.500 & 20 \\ 0.500 & 20 \\ 0.500 & 20 \\ 0.500 & 20 \\ 0.500 & 20 \\ 0.500 & 20 \end{pmatrix}$$

$s := 1 .. rows(bolt2)$

$N_s := bolt2_{s,2} \cdot \frac{1}{in}$ pitch of bolt

$D_s := bolt2_{s,1} \cdot in$ bolt diameter

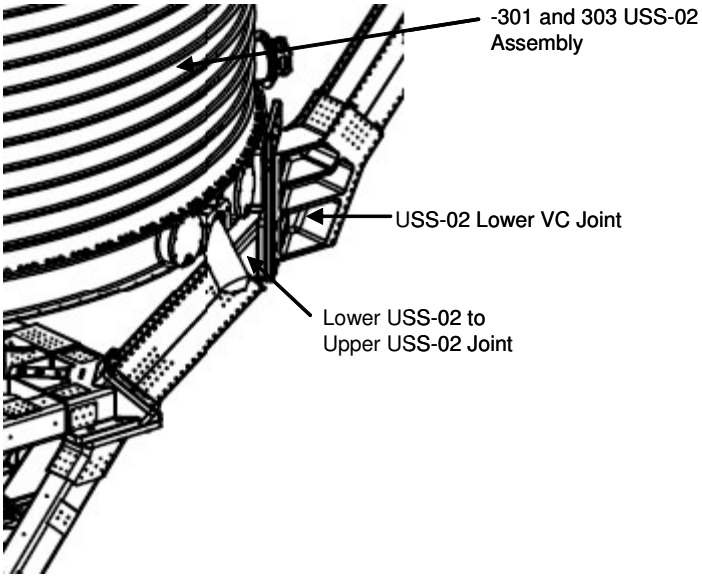

View of USS-02 Assembly and USS-02 Lower/Upper Joints Assembly

Tensile Area of bolt

$$At_s := \beta \cdot \left(\frac{D_s - 0.9743 \cdot \frac{1}{N_s}}{2} \right)^2$$

Shear Area of bolt

$$As_s := \beta \cdot \left(\frac{D_s - 1.299038 \cdot \frac{1}{N_s}}{2} \right)^2$$

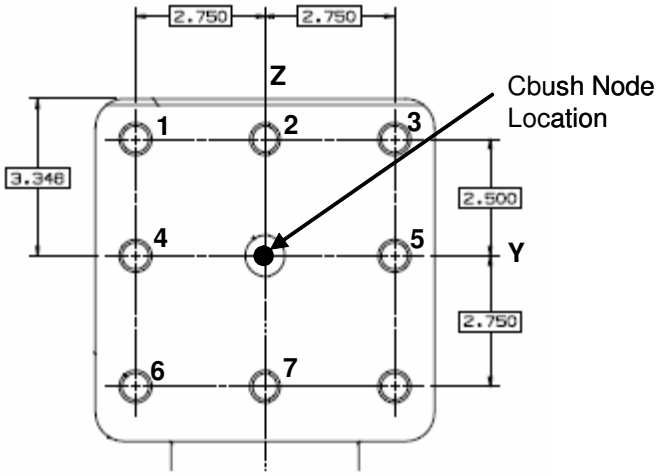

Lower USS-02 to Lower Vacuum Case Joint Bolt Pattern for Fail-Safe Analysis

Bolt no. x co-ord y co-ord z co-ord

$$\begin{pmatrix}1\\2\\3\\4\\5\\6\\7\end{pmatrix} \quad x := \begin{pmatrix}0.0\\0.0\\0.0\\0.0\\0.0\\0.0\\0.0\end{pmatrix}\cdot in \quad y := \begin{pmatrix}-2.75\\0.0\\2.75\\-2.75\\2.75\\-2.75\\0.0\end{pmatrix}\cdot in \quad z := \begin{pmatrix}2.50\\2.50\\2.50\\0.0\\0.0\\-2.75\\-2.75\end{pmatrix}\cdot in$$

Location of applied forces and moments

$xforce := 0.0in$ $yforce := 0.0in$ $zforce := 0.0in$

$$cgload := \begin{pmatrix}xforce\\yforce\\zforce\end{pmatrix} \qquad cgload = \begin{pmatrix}0\\0\\0\end{pmatrix} in$$

Center of gravity of bolt group

$$xcg := \frac{\sum_s x_s}{rows(x)} \quad xcg = 0\,in \qquad ycg := \frac{\sum_s y_s}{rows(y)} \quad ycg = -0.393\,in \qquad zcg := \frac{\sum_s z_s}{rows(z)} \quad zcg = 0.286\,in$$

$$cg_{bolt} := \begin{pmatrix}xcg\\ycg\\zcg\end{pmatrix} \qquad cg_{bolt} = \begin{pmatrix}0\\-0.393\\0.286\end{pmatrix} in$$

Note: Since the x direction is into the plate the loads are shared equally between the bolts. However, due to a failure in bolt 8, the y and z directions in the bolt pattern are unsymmetric and have offsets from the center of gravity.

Load Vector

$$r_{load} := cgload - cg_{bolt} \qquad r_{load} = \begin{pmatrix}0\\0.393\\-0.286\end{pmatrix} in$$

Distance from CG of Bolts to Individual Bolts for shear calculations

$$r_s := \sqrt{(z_s - zcg)^2 + (y_s - ycg)^2}$$

$$r = \begin{pmatrix} 3.234 \\ 2.249 \\ 3.845 \\ 2.374 \\ 3.156 \\ 3.843 \\ 3.061 \\ 3.823 \end{pmatrix} in$$

Reading database file for bolted joint, nominal landing case

data := READPRN("lowerussvcf_r2_nomland.txt")

$q := 1 .. rows(data)$ $\quad$ $num_bolts := rows(bolt2)$

Loads from 2-04 loads model, nominal landing case

Axial Load $\quad Fx_q := data_{q,3} \cdot lbf$

Shear in Y axis $\quad Fy_q := data_{q,4} \cdot lbf$

Shear in Z axis $\quad Fz_q := data_{q,5} \cdot lbf$

Element Identification $\quad ID2_q := data_{q,1}$

Load Case Number $\quad LC2_q := data_{q,2}$

Torsion $\quad Mx_q := data_{q,6} \cdot in \cdot lbf$

Moment about Y axis $\quad My_q := data_{q,7} \cdot in \cdot lbf$

Moment about Z axis $\quad Mz_q := data_{q,8} \cdot in \cdot lbf$

$ID2_q := ID2_q \cdot 100 + 1$ Counter for number of bolts in pattern

Applied Bending Moment at Bolts $\quad M2_q := 0 \cdot in \cdot lbf$

Format of Output File

The stack command below is used to stack the element identifications (ID2) and load cases (LC2) in asending order per bolt.See the array example above for explanation. Note: bolt number 8 is not included.

ID2 := stack(ID2, ID2 + 1, ID2 + 2, ID2 + 3, ID2 + 4, ID2 + 5, ID2 + 6)

LC2 := stack(LC2, LC2, LC2, LC2, LC2, LC2, LC2)

Moment Distribution

$$M_{tot}^{\langle q \rangle} := \begin{pmatrix} Mx_q \\ My_q \\ Mz_q \end{pmatrix} + r_{load} \times \begin{pmatrix} Fx_q \\ Fy_q \\ Fz_q \end{pmatrix}$$

Use the cross-product to determine the additional moments acting on the fasteners.

$Mx_boltcg_q := M_{tot_{1,q}}$ $\quad$ $My_boltcg_q := M_{tot_{2,q}}$ $\quad$ $Mz_boltcg_q := M_{tot_{3,q}}$

Tension on bolts

$$Ftdirect_{s,q} := \begin{cases} 0 \cdot lbf & \text{if } Fx_q \le 0 lbf \\ \dfrac{Fx_q}{num_bolts} & \text{otherwise} \end{cases}$$

Direct tensile load calculation

$$Fmz_{s,q} := \begin{cases} 0 \cdot lbf & \text{if } (y_s - ycg) = 0 \cdot in \\ \dfrac{\left[Mz_boltcg_q \cdot (y_s - ycg)\right] At_s}{\sum_s \left[(y_s - ycg)^2 \cdot At_s\right]} & \end{cases}$$

$$Fmy_{s,q} := \begin{cases} 0 \cdot lbf & \text{if } (z_s - zcg) = 0 \cdot in \\ \dfrac{My_boltcg_q \cdot (z_s - zcg) \cdot At_s}{\sum_s \left[\left(\left|z_s - zcg\right|\right)^2 \cdot At_s\right]} & \end{cases}$$

$Ft2_{s,q} := Ftdirect_{s,q} + Fmz_{s,q} + Fmy_{s,q}$ Total Tensile load

Shear on bolts

Secondary shear on bolts $\quad Fs_{s,q} := \dfrac{Mx_boltcg_q \cdot r_s \cdot As_s}{\sum_s \left[(r_s)^2 \cdot (As_s)\right]}$ $\quad$ Total shear load $\quad Fstot_{s,q} := Fs_{s,q}$

(Note: The direct shear is taken by the shear pin.)

The stack commands below are used to stack apllied axial load (P2), applied shear load (V2), and applied moment (M2) in asending order per bolt. These loads are put into an array with the element/bolt number and load case number from above. See the "Output" file below. Notice how there is only 7 bolts, since bolt number 8 is not included.

$$P2 := \text{stack}\left[\left(Ft2^T\right)^{\langle 1\rangle}, \left(Ft2^T\right)^{\langle 2\rangle}, \left(Ft2^T\right)^{\langle 3\rangle}, \left(Ft2^T\right)^{\langle 4\rangle}, \left(Ft2^T\right)^{\langle 5\rangle}, \left(Ft2^T\right)^{\langle 6\rangle}, \left(Ft2^T\right)^{\langle 7\rangle}\right]$$

$$V2 := \text{stack}\left[\left(Fstot^T\right)^{\langle 1\rangle}, \left(Fstot^T\right)^{\langle 2\rangle}, \left(Fstot^T\right)^{\langle 3\rangle}, \left(Fstot^T\right)^{\langle 4\rangle}, \left(Fstot^T\right)^{\langle 5\rangle}, \left(Fstot^T\right)^{\langle 6\rangle}, \left(Fstot^T\right)^{\langle 7\rangle}\right]$$

$$M2 := \text{stack}(M2, M2, M2, M2, M2, M2, M2)$$

The "Output2" file below outputs an array from left to right starting with the element identification (ID2), Load case number (LC2), applied load on the bolt (P2), applied shear on the bolt (V2), and applied moment on the bolt (M2). See the output array example above. The array is written to a text file.

$$Output2 := \text{augment}\left(ID2, LC2, \frac{P2}{lbf}, \frac{V2}{lbf}, \frac{M2}{in \cdot lbf}\right)$$

(Note: Since the ID2 and LC2 numbers are dimensionless, the P2, V2, and M2 values are divided by their units in order to make the array dimensionless.)

Size of the "Output2" Array: $\text{rows}(Output2) = 1792$

(7 bolts x 64 load cases) x 4 joints = 1792 load cases

$$\text{WRITEPRN}(\text{"output_forces_lowerussvcf_r2_nomland_fs.txt"}) := Output2$$

Bolt Fail-safe Results

The array from the text file above is read:

$$data_fs := \text{READPRN}(\text{"output_forces_lowerussvcf_r2_nomland_fs.txt"})$$

$$s := 1 .. \text{rows}(data_fs)$$

Prepared By	Name	Date		File Name
	Brent Dyer	10/06/05	Engineering and Science Contract Group	LwUSS_upUSS_r3.mcd
Checked By	John Krejci		*Structural Analysis Section*	Draw ing No. SDG39135724
Title	Bolts from Lower USS-02 to Upper USS-02			

Fail-safe Loads, nominal landing

Applied tensile load $P_FS_s := data_fs_{s,3} \cdot lbf$ $ID_FS_s := data_fs_{s,1}$

Applied shear load $V_FS_s := data_fs_{s,4} \cdot lbf$ $LC_FS_s := data_fs_{s,2}$

Applied bending moment $M_FS_s := data_fs_{s,5} \cdot in \cdot lbf$

Fail-safe Factors of Safety

Ultimate $SFu_FS := 1.0$

Joint Separation $SFsep_FS := 1.0$

This file uses the calculations shown in \\escfil02\2i11_mathcad\8307_bolts\ multi_bolt_stiffness_insert_FS_RevC

Fail-Safe Stiffness File

Bolt Fail-safe Load data

Joint separation load $\max(Psep_FS) = 6341.621\,lbf$ $\max(P_FS) = 6341.621\,lbf$

Max. load on the bolt(ultimate) $\max(Pb_FS) = 19435.8\,lbf$ $\max(V_FS) = 4942.859\,lbf$

Summary of fail-safe Margins for bolt:

Joint separation	$MS_minFS_{1,1} = 0.237$	Total Thread shear Ultimate	$MS_minFS_{5,1} = 0.339$
Direct Tension Ultimate	$MS_minFS_{2,1} = 2.761$	Shear Ultimate	$MS_minFS_{6,1} = 1.74$
Total Tension Ultimate	$MS_minFS_{3,1} = 0.411$	Bending Ultimate	$MS_minFS_{7,1} = 10$
Direct Thread shear Ultimate	$MS_minFS_{4,1} = 2.57$	Combined shear, tension and bending ultimate	$MS_minFS_{8,1} = 0.3657$

Determination of the smallest fail-safe margin of safety for the bolt, and the failure mode:

$MSbolt_FS := \min(MS_FS)$

$MSbolt_FS = 0.237$ Failure_Mode_FS = "Joint Separation"

$MS_min_ID = 6604206$ Element Identification (66041) and Bolt Number (5) for Minimum Margin

$MS_min_LC = 4028$ Load Case Number for Minimum Margin

$MS_min_P = 6341.6$ Applied Tensile Load for Minimum Margin

$MS_min_V = 3953.4$ Applied Shear Load for Minimum Margin

$MS_min_M = 0$ Applied Bending Moment for Minimum Margin

Prepared By	Name	Date		File Name
	Brent Dyer	10/06/05		LwUSS_upUSS_r3.mcd
Checked By	John Krejci		**Engineering and Science Contract Group** *Structural Analysis Section*	Draw ing No. SDG39135724
Title	Bolts from Lower USS-02 to Upper USS-02			

Shear Pin Analysis for Lower USS-02 to Upper USS-02

The USS-02 assembly consists of four Lower Vacuum Case Joints (SDG39135737). Each Lower Vacuum Case Joint to Lower USS-02 joint has a shear pin (SDG39135755-003) installed with two bushings. The shear pin sets inside of a inner bushing SDG39135757-009 and the inner bushing sets inside of the outer bushing SDG39135757-011.

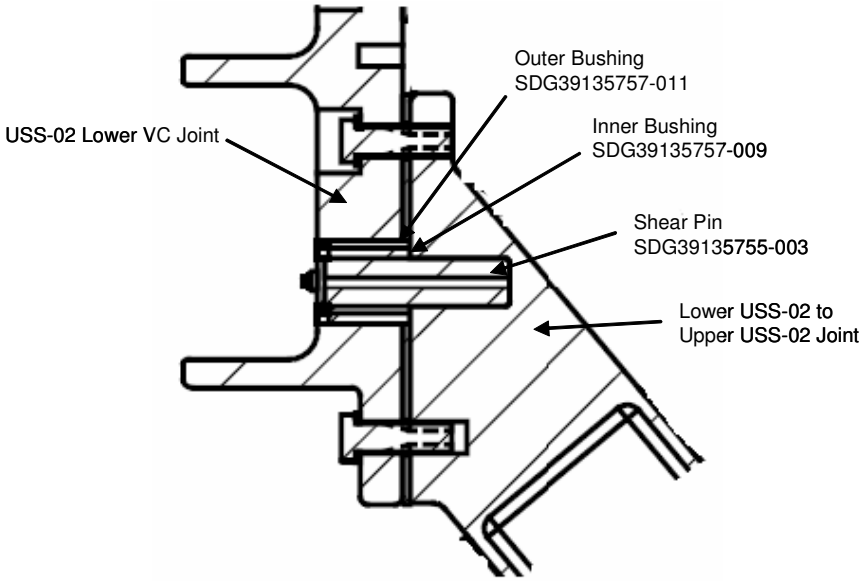

Cross Section of the Bolted Interface

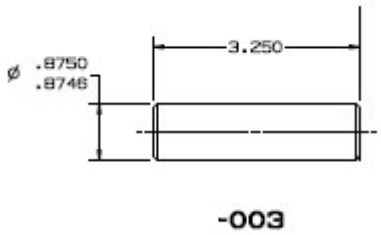

Shear Pin SDG39135755-003

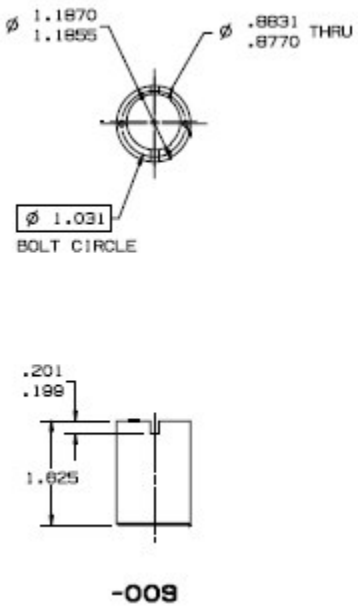

Inner Bushing SDG39135757-009

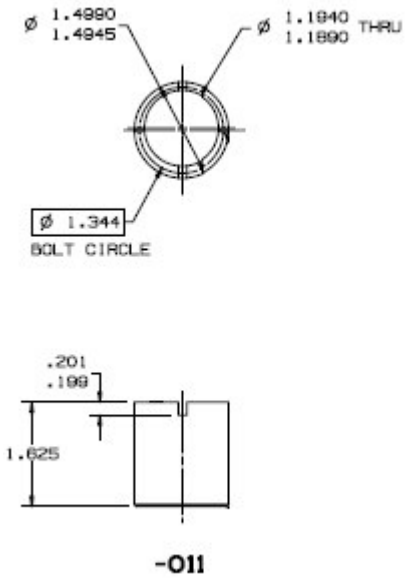

Outer Bushing SDG39135757-011

Geometry

Minimum Diameter of shear pin	$dp := 0.8746 \cdot in$	(Ref. Drg. SDG39135755-003)
Outer diameter of outer bushing	$do := 1.4945 \cdot in$	(Ref. Drg. SDG39135757-011)
Thickness of lower VC joint	$tp := 1.5 \cdot in$	(Ref. Drg. SDG39135737)
Length of inner bushing	$tpin := 1.625 \cdot in$	(Ref. Drg. SDG39135757-009)

Temperature Data

Shear Pin (Custom 455, H1000 bar, AMS5617):

Temperature correction factor for shear	$csp := 0.96$	(Ref. MIL-HDBK-5J, table 2.6.4.1.2)

Interface Plate (Al 7050-T7451 Plate):

Temperature correction factor for ultimate	$cpu := 0.89$	(Ref. MIL-HDBK-5J, fig. 3.7.4.2.1)
Temperature correction factor for yield	$cpy := 0.96$	

Bushings (Aluminum Bronze AMS4640, ASTM B150, alloy C63000):

Temperature correction factor for ultimate	$cbu := 0.95$	(Ref. Appendix C8)
Temperature correction factor for yield	$cby := 0.99$	

Material Properties

Shear Pin (Custom 455, H1000 bar, AMS5617):

Allowable shear stress	$Fsu := 124000 \cdot psi$	(Ref. MIL-HDBK-5J, table 2.6.4.0(b))

Interface Plate (Al 7050-T7451 Plate):

Allowable bearing stress	$Fbrup := 141000 \cdot psi$	(Ref. MIL-HDBK-5J, table 3.7.4.0 (b1), 2.5 in. thick, e/D=2.0)
	$Fbryp := 104000 \cdot psi$	

Bushings (Aluminum Bronze AMS4640, ASTM B150, alloy C63000):

Allowable bearing stress of bushing	$Fbru := 125000 \cdot psi$	(Ref. Appendix C8, Rockwell Materials data sheet 09.12.01.01,1.0)
	$Fbry := 72000 \cdot psi$	

Shear Pin Analysis

Loads in shear pin from Bolt Analysis (Direct Shear)

$$Fsp_j := \sqrt{(Fy_j)^2 + (Fz_j)^2}$$

$rows(Fsp) = 256$

(4 joints x 64 load cases = 256 load cases)

Shear Area of pin

$$Ash := \frac{\beta \cdot dp^2}{4}$$

$Ash = 0.601\,in^2$

Allowable shear load

$Pall := Fsu \cdot Ash \cdot csp$

$Pall = 71515.8\,lbf$

Margin of safety

$$MSp_j := \left(\frac{Pall}{Fsp_j \cdot SFu} - 1\right)$$

$min(MSp) = 1.76$

Bearing of Outer Bushing on Interface Plate

Bearing of the outer bushing on the Lower USS-02 to Upper USS-02 Joint is not critical since the bearing thickness is 1.750 in. compared to 1.500 in. on the Lower Vacuum Case Joint. So the margin of safety is high for bearing on the Lower USS-02 to Upper USS-02 Joint. The Lower Vacuum Case Joint thickness is used below.

Bearing area

$Ab := do \cdot tp$

$Ab = 2.242\,in^2$

Allowable bearing load

$Pbru := Fbrup \cdot Ab \cdot cpu$

$Pbru = 281317.2\,lbf$

$Pbry := Fbryp \cdot Ab \cdot cpy$

$Pbry = 223816.3\,lbf$

Margin of safety

$$MSu_j := \frac{Pbru}{Fsp_j \cdot SFu} - 1$$

$$MSy_j := \frac{Pbry}{Fsp_j \cdot SFy} - 1$$

$min(MSu) = 9.87$

$min(MSy) = 10.01$

Bearing of Shear Pin on Inner Bushing

Bearing area $Abp := dp \cdot tpin$ $\quad Abp = 1.421\,in^2$

Allowable bearing load $Pbrui := Fbru \cdot Abp \cdot cbu$ $\quad Pbrui = 168770.5\,lbf$

$Pbryi := Fbry \cdot Abp \cdot cby$ $\quad Pbryi = 101304.9\,lbf$

Margin of safety $MSbru_j := \frac{Pbrui}{Fsp_j \cdot SFu} - 1$ $\quad MSbry_j := \frac{Pbryi}{Fsp_j \cdot SFy} - 1$

$\min(MSbru) = 5.52$

$\min(MSbry) = 3.98$

2.4.2.2 Lower Angle Beam Flange to Centerbody Box Joint

Prepared By	Name	Date	Engineering and Science Contract Group	File Name
	Brent Dyer	06/02/06		Lwabf_cbj_r3.mcd
Checked By	C. Bala		*Structural Analysis Section*	Drawing No. SDG39135758
Title	Bolts from Lower Angle Beam Flange to Centerbody Box Joint			

Lower Angle Beam Flange to Centerbody Box Joint Bolt Analysis

The Lower USS-02 assembly consists of four Lower Angle Beam Flanges and Centerbody Box Joints. There are a total of 8 fasteners attaching the Lower Angle Beam Flange to the Centerbody Box Joint. The fasteners are EWB0420 (200 ksi), 0.50-20 UNFJ. The drawing number for the Lower USS-02 Assembly is SDG39135758.

thread/in

$$bolt := \begin{pmatrix} 0.500 & 20 \\ 0.500 & 20 \\ 0.500 & 20 \\ 0.500 & 20 \\ 0.500 & 20 \\ 0.500 & 20 \\ 0.500 & 20 \\ 0.500 & 20 \end{pmatrix}$$

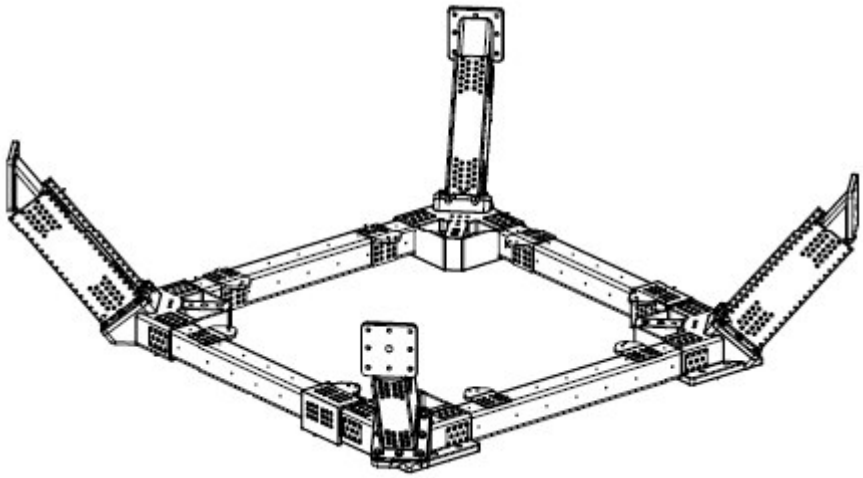

View of Lower USS-02 Assembly SDG39135758

$i := 1 .. rows(bolt)$

$N_i := bolt_{i,2} \cdot \frac{1}{in}$ pitch of bolt

$D_i := bolt_{i,1} \cdot in$ bolt diameter

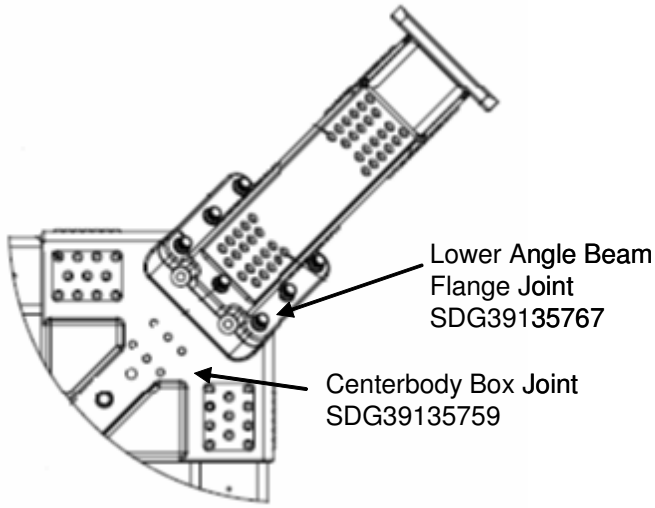

Lower Angle Beam Flange to Centerbody Box Joint

$$At_i := \beta \cdot \left(\frac{D_i - 0.9743 \cdot \frac{1}{N_i}}{2} \right)^2$$ Tensile Area of bolt

$$As_i := \beta \cdot \left(\frac{D_i - 1.299038 \cdot \frac{1}{N_i}}{2} \right)^2$$ Shear Area of bolt

Prepared By	Name	Date		File Name
	Brent Dyer	06/02/06		Lwabf_cbj_r3.mcd
Checked By	C. Bala		**Engineering and Science Contract Group** *Structural Analysis Section*	Draw ing No. SDG39135758
Title	Bolts from Lower Angle Beam Flange to Centerbody Box Joint			

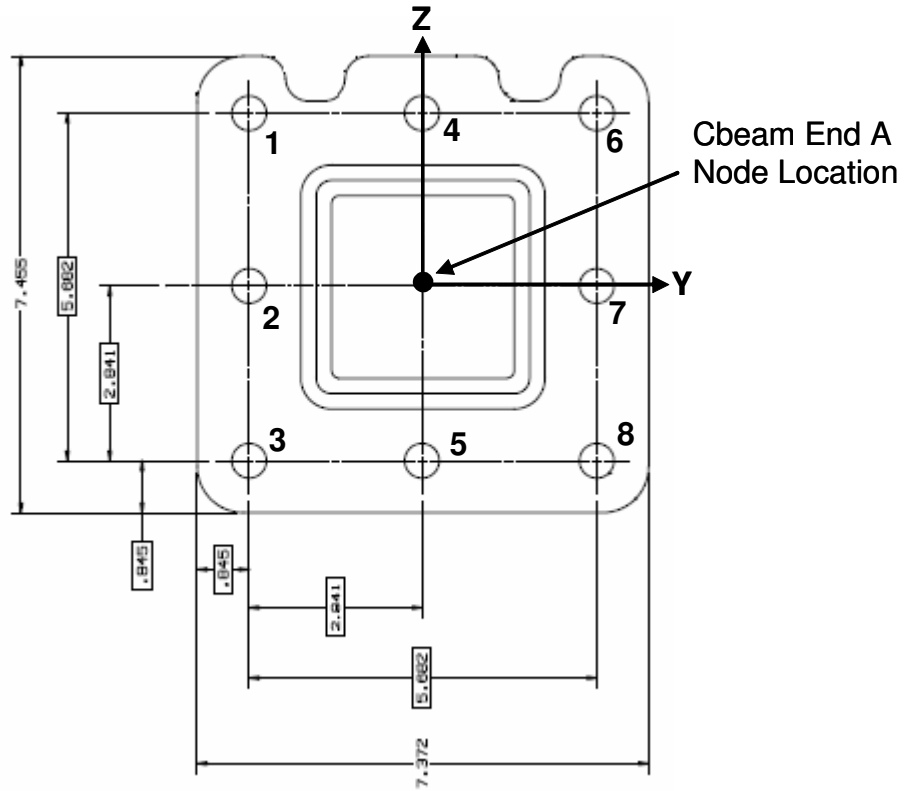

Lower Angle Beam Flange to Centerbody Box Joint Bolt Pattern

Bolt no. x co-ord y co-ord z co-ord

$$\begin{pmatrix}1\\2\\3\\4\\5\\6\\7\\8\end{pmatrix} \quad x := \begin{pmatrix}0.0\\0.0\\0.0\\0.0\\0.0\\0.0\\0.0\\0.0\end{pmatrix}\cdot in \quad y := \begin{pmatrix}-2.841\\-2.841\\-2.841\\0.0\\0.0\\2.841\\2.841\\2.841\end{pmatrix}\cdot in \quad z := \begin{pmatrix}2.841\\0.0\\-2.841\\2.841\\-2.841\\2.841\\0.0\\-2.841\end{pmatrix} in$$

Location of applied forces and moments

$xforce := 0.0in \qquad yforce := 0.0in \qquad zforce := 0.0in$

$$cgload := \begin{pmatrix}xforce\\yforce\\zforce\end{pmatrix} \qquad cgload = \begin{pmatrix}0\\0\\0\end{pmatrix} in$$

Center of gravity of bolt group

$$xcg := \frac{\sum_i x_i}{rows(x)} \qquad xcg = 0\,in \qquad ycg := \frac{\sum_i y_i}{rows(y)} \qquad ycg = 0\,in \qquad zcg := \frac{\sum_i z_i}{rows(z)} \qquad zcg = 0\,in$$

$$cg_{bolt} := \begin{pmatrix} xcg \\ ycg \\ zcg \end{pmatrix} \qquad cg_{bolt} = \begin{pmatrix} 0 \\ 0 \\ 0 \end{pmatrix} in$$

Note: Since the x direction is into the plate the loads are shared equally between the bolts. The bolt pattern is symmetric about the y-axis and z-axis with a zero offset from the center of gravity.

Load Vector

$$r_{load} := cgload - cg_{bolt} \qquad r_{load} = \begin{pmatrix} 0 \\ 0 \\ 0 \end{pmatrix} in$$

Distance from CG of Bolts to Individual Bolts for shear calculations

$$r_i := \sqrt{(z_i - zcg)^2 + (y_i - ycg)^2} \qquad r = \begin{pmatrix} 4.018 \\ 2.841 \\ 4.018 \\ 2.841 \\ 2.841 \\ 4.018 \\ 2.841 \\ 4.018 \end{pmatrix} in$$

Loads model 2-06 was used to retrieve loads at the four bolted interfaces. A Cbeam element located at the center of each lower angle beam flange was post processed in NASPOST for end A forces and moments in the x, y, and z directions. The Cbeam element identifications for the four bolted interfaces are 1625, 1628, 1630, and 1632. These loads are read into an array and distributed out to the 8 bolts for each lower angle beam flange.

(Note: This joint was checked for minimum margins of safety for launch and abort landing load cases. The abort landing cases combined with abort landing temperature data resulted in the lowest minimimum margins of safety. Therefore, the abort landing cases are used in this analysis.)

Reading database file for bolted joint, abort landing case

data := READPRN("lowerusstocenter_r2_abortland.txt")

$j := 1 .. rows(data)$

$num_bolts := rows(bolt)$

Loads from 2-06 loads model, abort landing case

(Note: These loads are taken from end A of the Cbeam element)

Axial Load $Fx_j := data_{j,7} \cdot lbf$

Torsion $Mx_j := data_{j,8} \cdot in \cdot lbf$

Shear in Y axis $Fy_j := data_{j,5} \cdot lbf$

Moment about Y axis $My_j := data_{j,4} \cdot in \cdot lbf$

Shear in Z axis $Fz_j := data_{j,6} \cdot lbf$

Moment about Z axis $Mz_j := data_{j,3} \cdot in \cdot lbf$

Element Identification $ID_j := data_{j,1}$

$ID_j := ID_j \cdot 1000 + 1$ Counter for number of bolts in pattern

Load Case Number $LC_j := data_{j,2}$

Applied Bending Moment at Bolts $M_j := 0 \cdot in \cdot lbf$

Format of Output File

The stack commands below are used to stack the element identifications (ID) and load cases (LC) in asending order per bolt. The element ID number is located in the first column and the LC numbers in the second column. For each element identification, 1625, 1628, 1630, and 1632, the bolt number within the bolt pattern is added to the end of each element identification. For example, the element identification number 1625 will have bolt numbers 1 thru 8 attached to the end for all 64 load cases. This brings the total number of load cases to 2048 (4 joints x 8 bolts x 64 load cases = 2048). See the array example to the right.

$ID := stack(ID, ID+1, ID+2, ID+3, ID+4, ID+5, ID+6, ID+7)$

$LC := stack(LC, LC, LC, LC, LC, LC, LC, LC)$

$$\begin{array}{cc} ID & LC \\ \end{array}$$
$$\begin{bmatrix} 1625001 & 1001 \\ 1625001 & 1002 \\ \ldots & \ldots \\ 1625001 & 1064 \\ 1625002 & 1001 \\ 1625002 & 1002 \\ \ldots & \ldots \\ 1625002 & 1064 \\ \ldots & \ldots \\ \ldots & \ldots \\ 1625008 & 1001 \\ 1625008 & 1002 \\ \ldots & \ldots \\ 1625008 & 1064 \end{bmatrix}$$

Array Example

Moment Distribution

$$M_{tot}^{\langle j \rangle} := \begin{pmatrix} Mx_j \\ My_j \\ Mz_j \end{pmatrix} + r_{load} \times \begin{pmatrix} Fx_j \\ Fy_j \\ Fz_j \end{pmatrix}$$

Use the cross-product to determine the additional moments acting on the fasteners.

$Mx_boltcg_j := M_{tot_{1,j}}$ $\quad$ $My_boltcg_j := M_{tot_{2,j}}$ $\quad$ $Mz_boltcg_j := M_{tot_{3,j}}$

Tension on bolts

$$Ftdirect_{i,j} := \begin{cases} 0 \cdot lbf & \text{if } Fx_j \le 0lbf \\ \dfrac{Fx_j}{num_bolts} & \text{otherwise} \end{cases}$$

Direct tensile load calculation - (The if statement checks for compression)

$$Fmz_{i,j} := \begin{cases} 0 \cdot lbf & \text{if } (y_i - ycg) = 0 \cdot in \\ \dfrac{\left[Mz_boltcg_j \cdot (y_i - ycg)\right] At_i}{\sum_i \left[(y_i - ycg)^2 \cdot At_i\right]} & \end{cases}$$

$$Fmy_{i,j} := \begin{cases} 0 \cdot lbf & \text{if } (z_i - zcg) = 0 \cdot in \\ \dfrac{My_boltcg_j \cdot (z_i - zcg) \cdot At_i}{\sum_i \left[\left(\left|z_i - zcg\right|\right)^2 \cdot At_i\right]} & \end{cases}$$

$$Ft_{i,j} := Ftdirect_{i,j} + Fmz_{i,j} + Fmy_{i,j}$$

Total Tensile load

Shear on bolts

Secondary shear on bolts $\quad Fs_{i,j} := \dfrac{Mx_boltcg_j \cdot r_i \cdot As_i}{\sum_i \left[(r_i)^2 \cdot (As_i)\right]}$

Direct shear on bolts $\quad Fsd_{i,j} := \dfrac{\sqrt{(Fz_j)^2 + (Fy_j)^2}}{num_bolts}$

Total shear load $\quad Fstot_{i,j} := Fsd_{i,j} + Fs_{i,j}$

The stack commands below are used to stack applied axial load (P), applied shear load (V), and applied moment (M) in asending order per bolt. These loads are put into an array with the element/bolt number and load case number from above. See the "Output" file below.

$$P := \text{stack}\left[\left(Ft^T\right)^{\langle 1\rangle}, \left(Ft^T\right)^{\langle 2\rangle}, \left(Ft^T\right)^{\langle 3\rangle}, \left(Ft^T\right)^{\langle 4\rangle}, \left(Ft^T\right)^{\langle 5\rangle}, \left(Ft^T\right)^{\langle 6\rangle}, \left(Ft^T\right)^{\langle 7\rangle}, \left(Ft^T\right)^{\langle 8\rangle}\right]$$

$$V := \text{stack}\left[\left(Fstot^T\right)^{\langle 1\rangle}, \left(Fstot^T\right)^{\langle 2\rangle}, \left(Fstot^T\right)^{\langle 3\rangle}, \left(Fstot^T\right)^{\langle 4\rangle}, \left(Fstot^T\right)^{\langle 5\rangle}, \left(Fstot^T\right)^{\langle 6\rangle}, \left(Fstot^T\right)^{\langle 7\rangle}, \left(Fstot^T\right)^{\langle 8\rangle}\right]$$

$$M := \text{stack}(M, M, M, M, M, M, M, M)$$

The "Output" file below outputs an array from left to right starting with the element identification (ID), Load case number (LC), applied load on the bolt (P), applied shear on the bolt (V), and applied moment on the bolt (M). See the output array example below. The array is then written to a text file.

$$\text{Output} := \text{augment}\left(ID, LC, \frac{P}{lbf}, \frac{V}{lbf}, \frac{M}{in \cdot lbf}\right)$$

(Note: Since the ID and LC numbers are dimensionless, the P, V, and M values are divided by their units in order to make the array dimensionless.)

$$\begin{array}{ccccc} ID & LC & P & V & M \end{array}$$
$$\begin{bmatrix} 1625001 & 1001 & -1068.05 & -358.78 & 0 \\ 1625001 & 1002 & -1110.33 & -465.51 & 0 \\ \ldots & \ldots & \ldots & \ldots & \ldots \\ 1625001 & 1064 & -699.99 & -439.08 & 0 \\ 1625002 & 1001 & -813.60 & -263.63 & 0 \\ 1625002 & 1002 & -977.16 & -342.06 & 0 \\ \ldots & \ldots & \ldots & \ldots & \ldots \\ 1625002 & 1064 & -658.71 & -322.63 & 0 \\ \ldots & \ldots & \ldots & \ldots & \ldots \\ \ldots & \ldots & \ldots & \ldots & \ldots \\ 1625008 & 1001 & 1470.8 & -358.78 & 0 \\ 1625008 & 1002 & 1166.08 & -465.51 & 0 \\ \ldots & \ldots & \ldots & \ldots & \ldots \\ 1625008 & 1064 & 699.99 & -439.07 & 0 \end{bmatrix}$$

Example of Output Array

Size of the "Output" Array: $\text{rows}(\text{Output}) = 2048$

(8 bolts x 64 load cases) x 4 joints = 2048 load cases

(Note: The output array to the left is an example of the array format. The loads in this example are for format purposes only and should NOT be used in this analysis.)

WRITEPRN("output_forces_lowerusstocenter_r2_abortland.txt") := Output

Prepared By	Name	Date	Engineering and Science Contract Group	File Name
	Brent Dyer	06/02/06		Lwabf_cbj_r3.mcd
Checked By	C. Bala		*Structural Analysis Section*	Draw ing No. SDG39135758
Title	Bolts from Lower Angle Beam Flange to Centerbody Box Joint			

CHECK BOLTS (bolts SDG39135892-807, EWB 0420-8-13, 0.50-20UNJF-3A, Material-A-286), Insert MS51831CA206L, Washer NAS1587-8C

data := READPRN("output_forces_lowerusstocenter_r2_abortland.txt")

$s := 1..rows(data)$

Flange 1: Lower Angle Beam Flange
Part number:SDG39135767
Material: 7050-T7451

Flange 2: Centerbody Box Joint
Part number: SEG39135759
Material: 7050-T7451

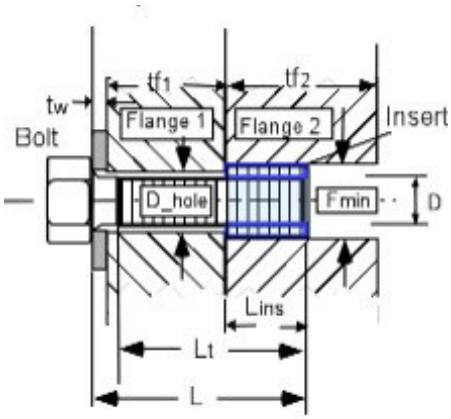

Loads

Applied tensile load $P_s := data_{s,3} \cdot lbf$

Applied shear load $V_s := data_{s,4} \cdot lbf$

Applied bending moment $M_s := data_{s,5} \cdot in \cdot lbf$

Element Identification $ID_s := data_{s,1}$

Load Case Number $LC_s := data_{s,2}$

Factors of Safety

Ultimate $SFu := 1.4$

Yield $SFy := 1.1$

Joint Separation $SFsep := 1.2$

Fitting factor $FF := 1.15$

Temperature Data (Ref Appendix C2), Abort Landing Case

Assembly $Temp_initial := 70 \cdot deg$

Maximum $Temp_max := 150 \cdot deg$

Minimum $Temp_min := 40 \cdot deg$

Bolt and Insert Data

Nominal diameter of bolt $D := 0.500 \cdot in$

Number of threads/inch $Nt := 20 \cdot \frac{1}{in}$

Total length of bolt $L := 1.651 \cdot in$

Length of insert $Lins := 0.688 \cdot in$

Threaded length $Lt := 0.838 \cdot in$

Min. external diameter of insert $Fmin := 0.615 \cdot in$

(If bolt is fully threaded, input Lt = L)

Depth of recess for insert $lr := 0.02 \cdot in$

This file uses the calculations shown in \\escfil02\2i11_mathcad\8307_bolts\thread_data.mcd

Thread Data File

Washer Data

Thickness of washer $tw := 0.078 \cdot in$

Outer Diameter of washer $Dw := .875in$

Inner Diameter of washer $Dwi := 0.515 \cdot in$

Bolt head dia. across flats $dw := 0.823 \cdot in$

(used only if there is no washer)

Flange data

Thickness of flange 1 (Ref. SDG39135767) $tf1 := .750 \cdot in$

Thickness of flange 2 (Ref. SDG39135759) $tf2 := .688in$ (Insert Length)

Diameter of hole $D_hole := 0.563 \cdot in$

Note: If there is no washer, tw, Dw, and Dwi should be zero.

Material Property Data

Bolt

Temperature correction factor for bolt strength ultimate (Ref. MIL-HDBK-5J, fig. 6.2.1.1.1) $TSu_bolt := .96$ yield $TSy_bolt := .96$

Bolt ultimate tensile allowable stress $Ftu_bolt := 200000 \cdot psi$

Bolt ultimate shear allowable stress $Fsu_bolt := 0.6 \cdot Ftu_bolt$

Bolt yield tensile allowable $Fty_bolt := 180000 \cdot psi$

Temperature correction factor for bolt modulus $TE_bolt := .97$ (Ref. MIL-HDBK-5J, fig. 6.2.1.1.4(a))

Modulus of elasticity of bolt $E_bolt := \left(29.1 \cdot 10^{6} \cdot psi\right)$ (Ref. MIL-HDBK-5J, table 6.2.1.0(b))

Thermal coeffecient for bolt: (Ref. MIL-HDBK-5J, fig. 6.2.1.0) $u_bolt_hot := 9.1 \cdot 10^{-6} \cdot \frac{\frac{in}{in}}{deg}$ $u_bolt_cold := 8.8 \cdot 10^{-6} \cdot \frac{\frac{in}{in}}{deg}$

Insert

Temperature correction factor for insert strength $TS_ins := .96$ (Ref. MIL-HDBK-5J, fig. 6.2.1.1.1)

Ultimate tensile allowable stress $Ftu_ins := 140000 \cdot psi$ (Ref. MS51831)

Ultimate shear allowable stress $Fsu_ins := 0.6 \cdot Ftu_ins$

Washer

Temperature correction factor for washer modulus $TE_washer := .96$ (Ref. MIL-HDBK-5J, fig. 6.2.1.1.1)

Modulus of elasticity of washer $E_washer := \left(29.1 \cdot 10^{6} \cdot psi\right)$ (Ref. MIL-HDBK-5J, table 6.2.1.0(b))

Prepared By	Name	Date	Engineering and Science Contract Group	File Name
	Brent Dyer	06/02/06		Lwabf_cbj_r3.mcd
Checked By	C. Bala		*Structural Analysis Section*	Drawing No. SDG39135758
Title	Bolts from Lower Angle Beam Flange to Centerbody Box Joint			

Flanges

Stiffness of the joint depends upon number of members in the grip of the fasteners, Modulus of elasticity of these members, and diameters of the bolt and the washer.

Temperature correction factor for flange 1 $Tf1E := .96$ (modulus) (Ref. MIL-HDBK-5J, fig. 3.7.6.1.4 and Appendix C9)

Temperature correction factor for flange 2 $Tf2E := .96$ (modulus)

$Tf2s := .95$ (strength) (Ref. MIL-HDBK-5J, fig. 3.7.4.2.1)

Shear Strength Allowable for flanges $Fsu_f2 := 44000 \cdot psi$ (Ref. MIL-HDBK-5J, table 3.7.4.0(b1))

Modulus of elasticity for the parts in the joint (Ref. MIL-HDBK-5J, table 3.7.4.0(b1)) $E_flange1 := \left(10.3 \cdot 10^{6} \cdot psi\right)$ $E_flange2 := \left(10.3 \cdot 10^{6} \cdot psi\right)$

Coefficient of thermal expansion for flanges (Ref. MIL-HDBK-5J, table 3.7.4.0(b1) and Appendix C9)

$u_flange1_hot := 12.8 \cdot 10^{-6} \cdot \frac{\frac{in}{in}}{deg}$ $u_flange2_hot := 12.8 \cdot 10^{-6} \cdot \frac{\frac{in}{in}}{deg}$

$u_flange1_cold := 12.1 \cdot 10^{-6} \cdot \frac{\frac{in}{in}}{deg}$ $u_flange2_cold := 12.1 \cdot 10^{-6} \cdot \frac{\frac{in}{in}}{deg}$

Torque/Preload data

Maximum torque (63% of yield) $Tmax := 1360 \cdot in \cdot lbf$

Minimum torque (95% of max. torque) $Tmin := 1292 \cdot in \cdot lbf$

Torque coefficient: $k := 0.15$

Loading plane factor: $n := .5$

Preload Uncertainty: $:= 0.25$

This file uses the calculations shown in \\escfil02\2i11_mathcad\8307_bolts\multi_bolt_stiffness_insert_RevC

Insert Stiffness File

Prepared By	Name	Date	Engineering and Science Contract Group	File Name
	Brent Dyer	06/02/06		Lwabf_cbj_r3.mcd
Checked By	C. Bala		*Structural Analysis Section*	Drawing No. SDG39135758
Title	Bolts from Lower Angle Beam Flange to Centerbody Box Joint			

Bolt Load data

Bolt/joint stiffness factor	$= = 0.399$	Preload due to temperature	$Pthr_pos = 1117\,lbf$
Max. preload	$PLDmax = 23783.7\,lbf$		$Pthr_neg = -373.6\,lbf$
Min. preload	$PLDmin = 11413.1\,lbf$	Uncertainty factor	$= 0.25$
Joint separation load	$max(Psep) = 9212.491\,lbf$	Torque coefficient	$k = 0.15$
Max. load on the bolt(ultimate)	$max(Pb) = 26250\,lbf$	Loading plane factor	$n = 0.5$
Max. load on the bolt(yield)	$max(Pby) = 25721.5\,lbf$	Thread shear pullout load of bolt or insert	$Pths = 47551.9\,lbf$
Bolt ultimate tensile strength	$PAt = 30159.1\,lbf$	Thread shear pullout load in parent metal	$Ppths = 27781.8\,lbf$

Length_check = "Bolt length is sufficient"

Summary of Margins for bolt:

Joint separation	$MS_min_{1,1} = 0.346$	Direct Thread shear Ultimate	$MS_min_{6,1} = 1.248$
Direct Tension Ultimate	$MS_min_{2,1} = 1.440$	Total Thread shear Ultimate	$MS_min_{7,1} = 0.058$
Direct Tension Yield	$MS_min_{3,1} = 1.795$	Shear Ultimate	$MS_min_{8,1} = 12.64$
Total Tension Ultimate	$MS_min_{4,1} = 0.149$	Bending Ultimate	$MS_min_{9,1} = 10$
Total Tension Yield	$MS_min_{5,1} = 0.055$	Combined shear, tension and bending ultimate	$MS_min_{10,1} = 0.149$

Determination of the smallest margin of safety for the bolt, and the failure mode:

$MSbolt := min(MS)$

$MSbolt = 0.055$ Minimum Margin of Safety

Failure_Mode = "Total Tension Yield"

$MS_min_ID = 1625001$ Element Identification (1625) and Bolt Number (1) for Minimum Margin

$MS_min_LC = 2015$ Load Case Number for Minimum Margin

$MS_min_P = 7677.1$ Applied Tensile Load for Minimum Margin

$MS_min_V = 436.1$ Applied Shear Load for Minimum Margin

$MS_min_M = 0$ Applied Bending Moment for Minimum Margin

Bolt Fail-Safe Analysis for Lower Angle Beam Flange to Centerbody Box Joint

Since bolt number 1 has the lowest margin of safety it is assumed that this bolt will be the first bolt to fail. There are now 7, EWB0420 0.50-20 UNFJ fasteners, holding the Lower Angle Beam Flange to the Centerbody Box Joint. The drawing number for the Lower USS-02 Assemblv is SDG39135758.

thread/in

$$bolt2 := \begin{pmatrix} 0.500 & 20 \\ 0.500 & 20 \\ 0.500 & 20 \\ 0.500 & 20 \\ 0.500 & 20 \\ 0.500 & 20 \\ 0.500 & 20 \end{pmatrix}$$

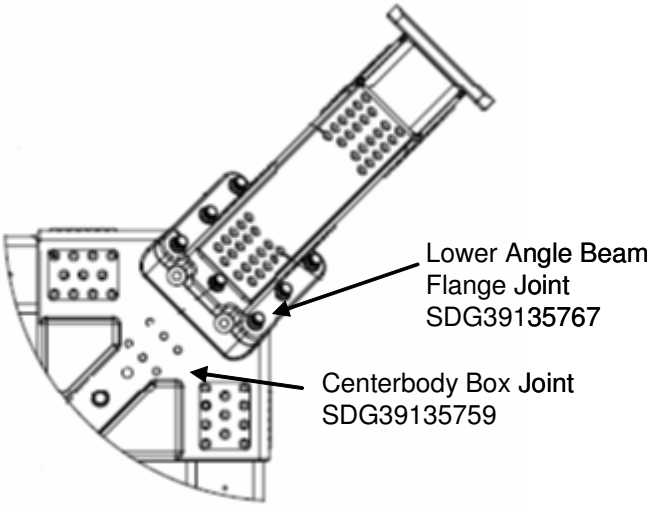

Lower Angle Beam Flange to Centerbody Box Joint

$s := 1 .. rows(bolt2)$

$N2_s := bolt2_{s,2} \cdot \frac{1}{in}$ pitch of bolt

$D2_s := bolt2_{s,1} \cdot in$ bolt diameter

Tensile Area of bolt

$$At2_s := \beta \cdot \left(\frac{D2_s - 0.9743 \cdot \frac{1}{N2_s}}{2} \right)^2$$

Shear Area of bolt

$$As2_s := \beta \cdot \left(\frac{D2_s - 1.299038 \cdot \frac{1}{N2_s}}{2} \right)^2$$

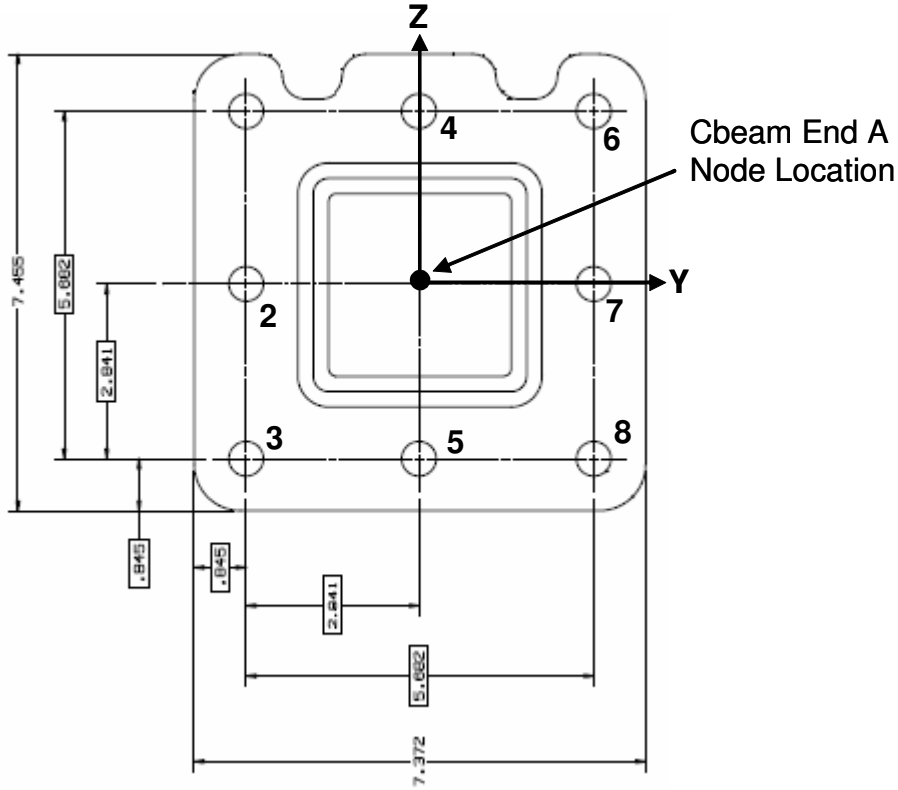

Fail-Safe Lower Angle Beam Flange to Centerbody Box Joint Bolt Pattern

Bolt no. x co-ord y co-ord z co-ord

$$\begin{pmatrix} 2 \\ 3 \\ 4 \\ 5 \\ 6 \\ 7 \\ 8 \end{pmatrix} \quad x2 := \begin{pmatrix} 0.0 \\ 0.0 \\ 0.0 \\ 0.0 \\ 0.0 \\ 0.0 \\ 0.0 \end{pmatrix} \cdot in \quad y2 := \begin{pmatrix} -2.841 \\ -2.841 \\ 0.0 \\ 0.0 \\ 2.841 \\ 2.841 \\ 2.841 \end{pmatrix} \cdot in \quad z2 := \begin{pmatrix} 0.0 \\ -2.841 \\ 2.841 \\ -2.841 \\ 2.841 \\ 0.0 \\ -2.841 \end{pmatrix} in$$

Location of applied forces and moments

$xforce2 := 0.0in \qquad yforce2 := 0.0in \qquad zforce2 := 0.0in$

$$cgload2 := \begin{pmatrix} xforce2 \\ yforce2 \\ zforce2 \end{pmatrix} \qquad cgload2 = \begin{pmatrix} 0 \\ 0 \\ 0 \end{pmatrix} in$$

Center of gravity of bolt group

$$xcg2 := \frac{\sum_s x2_s}{rows(x2)} \quad xcg2 = 0\,in \qquad ycg2 := \frac{\sum_s y2_s}{rows(y2)} \quad ycg2 = 0.406\,in \qquad zcg2 := \frac{\sum_s z2_s}{rows(z2)} \quad zcg2 = -0.406\,in$$

$$cg_{bolt2} := \begin{pmatrix} xcg2 \\ ycg2 \\ zcg2 \end{pmatrix} \qquad cg_{bolt2} = \begin{pmatrix} 0 \\ 0.406 \\ -0.406 \end{pmatrix} in$$

Note: Since the x direction is into the plate the loads are shared equally between the bolts. However, due to a failure in bolt 1, the y and z directions in the bolt pattern are unsymmetric and have offsets from the center of gravity.

Load Vector

$$r_{load2} := cgload2 - cg_{bolt2} \qquad r_{load2} = \begin{pmatrix} 0 \\ -0.406 \\ 0.406 \end{pmatrix} in$$

Distance from CG of Bolts to Individual Bolts for shear calculations

$$r2_s := \sqrt{\left(z2_s - zcg2\right)^2 + \left(y2_s - ycg2\right)^2}$$

$$r2_s = \begin{pmatrix} 3.272 \\ 4.059 \\ 3.272 \\ 2.469 \\ 4.059 \\ 2.469 \\ 3.444 \end{pmatrix} in$$

Reading database file for bolted joint, abort landing case

$data := READPRN(\text{"lowerusstocenter_r2_abortland.txt"})$

$q := 1 .. rows(data)$ $\quad num_bolts2 := rows(bolt2)$

Loads from 2-06 loads model, abort landing case

Axial Load $\quad Fx2_q := data_{q,7} \cdot lbf$

Shear in Y axis $\quad Fy2_q := data_{q,5} \cdot lbf$

Shear in Z axis $\quad Fz2_q := data_{q,6} \cdot lbf$

Element Identification $\quad ID2_q := data_{q,1}$

Load Case Number $\quad LC2_q := data_{q,2}$

Torsion $\quad Mx2_q := data_{q,8} \cdot in \cdot lbf$

Moment about Y axis $\quad My2_q := data_{q,4} \cdot in \cdot lbf$

Moment about Z axis $\quad Mz2_q := data_{q,3} \cdot in \cdot lbf$

$ID2_q := ID2_q \cdot 1000 + 1$ Counter for number of bolts in pattern

Applied Bending Moment at Bolts $\quad M2_q := 0 \cdot in \cdot lbf$

Format of Output File

The stack command below is used to stack the element identifications (ID2) and load cases (LC2) in asending order per bolt.See the array example above for explanation. Note: bolt number 1 is not included.

$ID2 := stack(ID2 + 1, ID2 + 2, ID2 + 3, ID2 + 4, ID2 + 5, ID2 + 6, ID2 + 7)$

$LC2 := stack(LC2, LC2, LC2, LC2, LC2, LC2, LC2)$

Moment Distribution

$$M_{tot2}^{\langle q \rangle} := \begin{pmatrix} Mx2_q \\ My2_q \\ Mz2_q \end{pmatrix} + r_{load2} \times \begin{pmatrix} Fx2_q \\ Fy2_q \\ Fz2_q \end{pmatrix}$$

Use the cross-product to determine the additional moments acting on the fasteners.

$Mx_boltcg2_q := M_{tot2_{1,q}}$ $\quad$ $My_boltcg2_q := M_{tot2_{2,q}}$ $\quad$ $Mz_boltcg2_q := M_{tot2_{3,q}}$

Tension on bolts

$$Ftdirect2_{s,q} := \begin{cases} 0 \cdot lbf & \text{if } Fx2_q \le 0lbf \\ \dfrac{Fx2_q}{num_bolts2} & \text{otherwise} \end{cases}$$

Direct tensile load calculation

$$Fmz2_{s,q} := \begin{cases} 0 \cdot lbf & \text{if } (y2_s - ycg2) = 0 \cdot in \\ \dfrac{\left[Mz_boltcg2_q \cdot (y2_s - ycg2)\right] At2_s}{\sum_s \left[(y2_s - ycg2)^2 \cdot At2_s\right]} & \end{cases}$$

$$Fmy2_{s,q} := \begin{cases} 0 \cdot lbf & \text{if } (z2_s - zcg2) = 0 \cdot in \\ \dfrac{My_boltcg2_q \cdot (z2_s - zcg2) \cdot At2_s}{\sum_s \left[\left(\left|z2_s - zcg2\right|\right)^2 \cdot At2_s\right]} & \end{cases}$$

$$Ft2_{s,q} := Ftdirect2_{s,q} + Fmz2_{s,q} + Fmy2_{s,q}$$

Total Tensile load

Shear on bolts

Secondary shear on bolts $\quad Fs2_{s,q} := \dfrac{Mx_boltcg2_q \cdot r2_s \cdot As2_s}{\sum_s \left[(r2_s)^2 \cdot (As2_s)\right]}$

Direct shear on bolts $\quad Fsd2_{s,q} := \dfrac{\sqrt{(Fz2_s)^2 + (Fy2_s)^2}}{num_bolts2}$

Total shear load $\quad Fstot2_{s,q} := Fsd2_{s,q} + Fs2_{s,q}$

The stack commands below are used to stack apllied axial load (P2), applied shear load (V2), and applied moment (M2) in asending order per bolt. These loads are put into an array with the element/bolt number and load case number from above. See the "Output2" file below. Notice how there is only 7 bolts, since bolt number 1 is not included.

$$P2 := \text{stack}\left[\left(Ft2^T\right)^{\langle 1\rangle}, \left(Ft2^T\right)^{\langle 2\rangle}, \left(Ft2^T\right)^{\langle 3\rangle}, \left(Ft2^T\right)^{\langle 4\rangle}, \left(Ft2^T\right)^{\langle 5\rangle}, \left(Ft2^T\right)^{\langle 6\rangle}, \left(Ft2^T\right)^{\langle 7\rangle}\right]$$

$$V2 := \text{stack}\left[\left(Fstot2^T\right)^{\langle 1\rangle}, \left(Fstot2^T\right)^{\langle 2\rangle}, \left(Fstot2^T\right)^{\langle 3\rangle}, \left(Fstot2^T\right)^{\langle 4\rangle}, \left(Fstot2^T\right)^{\langle 5\rangle}, \left(Fstot2^T\right)^{\langle 6\rangle}, \left(Fstot2^T\right)^{\langle 7\rangle}\right]$$

$$M2 := \text{stack}(M2, M2, M2, M2, M2, M2, M2)$$

The "Output2" file below outputs an array from left to right starting with the element identification (ID2), Load case number (LC2), applied load on the bolt (P2), applied shear on the bolt (V2), and applied moment on the bolt (M2). See the output array example above. The array is written to a text file.

$$Output2 := \text{augment}\left(ID2, LC2, \frac{P2}{lbf}, \frac{V2}{lbf}, \frac{M2}{in \cdot lbf}\right)$$

(Note: Since the ID2 and LC2 numbers are dimensionless, the P2, V2, and M2 values are divided by their units in order to make the array dimensionless.)

Size of the "Output2" Array: $\text{rows}(Output2) = 1792$

(7 bolts x 64 load cases) x 4 joints = 1792 load cases

$$\text{WRITEPRN}(\text{"output_forces_lowerusstocenter_r2_abortland_fs.txt"}) := Output2$$

Bolt Fail-safe Results

The array from the text file above is read:

$$data_fs := \text{READPRN}(\text{"output_forces_lowerusstocenter_r2_abortland_fs.txt"})$$

$$s := 1 .. \text{rows}(data_fs)$$

Fail-safe Loads, abort landing

Applied tensile load $P_FS_s := data_fs_{s,3} \cdot lbf$ $ID_FS_s := data_fs_{s,1}$

Applied shear load $V_FS_s := data_fs_{s,4} \cdot lbf$ $LC_FS_s := data_fs_{s,2}$

Applied bending moment $M_FS_s := data_fs_{s,5} \cdot in \cdot lbf$

Fail-safe Factors of Safety

Ultimate $SFu_FS := 1.0$

Joint Separation $SFsep_FS := 1.0$

This file uses the calculations shown in \\escfil02\2i11_mathcad\8307_bolts\ multi_bolt_stiffness_insert_FS_RevC

Fail-Safe Stiffness File

Bolt Fail-safe Load data

Joint separation load $\max(Psep_FS) = 7663.254\,lbf$ $\max(P_FS) = 7663.254\,lbf$

Max. load on the bolt(ultimate) $\max(Pb_FS) = 25542.2\,lbf$ $\max(V_FS) = 935.556\,lbf$

Summary of fail-safe Margins for bolt:

Joint separation	$MS_minFS_{1,1} = 0.618$	Total Thread shear Ultimate	$MS_minFS_{5,1} = 0.088$
Direct Tension Ultimate	$MS_minFS_{2,1} = 2.422$	Shear Ultimate	$MS_minFS_{6,1} = 14.92$
Total Tension Ultimate	$MS_minFS_{3,1} = 0.181$	Bending Ultimate	$MS_minFS_{7,1} = 10$
Direct Thread shear Ultimate	$MS_minFS_{4,1} = 2.15$	Combined shear, tension and bending ultimate	$MS_minFS_{8,1} = 0.1807$

Determination of the smallest fail-safe margin of safety for the bolt, and the failure mode:

$MSbolt_FS := \min(MS_FS)$

$MSbolt_FS = 0.088$ Failure_Mode_FS = "Total Thread Shear Ultimate"

$MS_min_ID = 1625003$ Element Identification (1632) and Bolt Number (3) for Minimum Margin

$MS_min_LC = 2032$ Load Case Number for Minimum Margin

$MS_min_P = 7663.3$ Applied Tensile Load for Minimum Margin

$MS_min_V = 587.1$ Applied Shear Load for Minimum Margin

$MS_min_M = 0$ Applied Bending Moment for Minimum Margin

2.4.3 Keel Assembly Bolted Interfaces

Keel Assembly Bolted Interfaces

The Keel Assembly Bolt Analysis is performed in the following report sections.

2.4.3.1	Keel Angle Joint to Lower USS Assembly
2.4.3.1	Keel Angle Joint to Lower USS Assembly Fail-Safe
2.4.3.2	Keel Retainer to Keel Trunnion and Keel Block
2.4.3.2	Keel Retainer to Keel Trunnion and Keel Block Fail-Safe

2.4.3.1 Keel Angle Joint to Lower USS Assembly

Prepared By	Name	Date		File Name
	Brent Dyer	10/27/05	**Engineering and Science Contract Group**	KAJ_LwUSS_r3.mcd
Checked By	John Krejci		*Structural Analysis Section*	Drawing No. SEG39135724
Title	Bolts from Keel Angle Joint to Lower USS-02 Assembly			

Keel Angle Joint to Lower USS-02 Assembly Bolt Analysis

The Keel Assembly consists of two Keel Angle Joints. There are a total of 7 fasteners attaching the Keel Angle Joint to the Lower USS-02 Centerbody Box Joint. The fasteners are EWB0420 (200 ksi), 0.50-20 UNFJ. The drawing number for the USS-02 Assembly is SEG39135724.

size thread/in

$$bolt := \begin{pmatrix} 0.50 & 20 \\ 0.50 & 20 \\ 0.50 & 20 \\ 0.50 & 20 \\ 0.50 & 20 \\ 0.50 & 20 \\ 0.50 & 20 \end{pmatrix}$$

$$i := 1 .. rows(bolt)$$

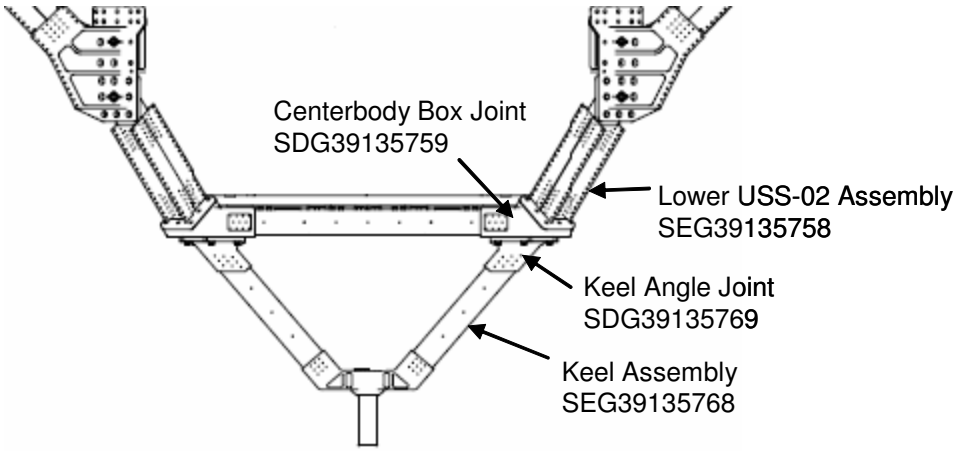

Front View of Keel Assembly and Lower USS-02 Assembly

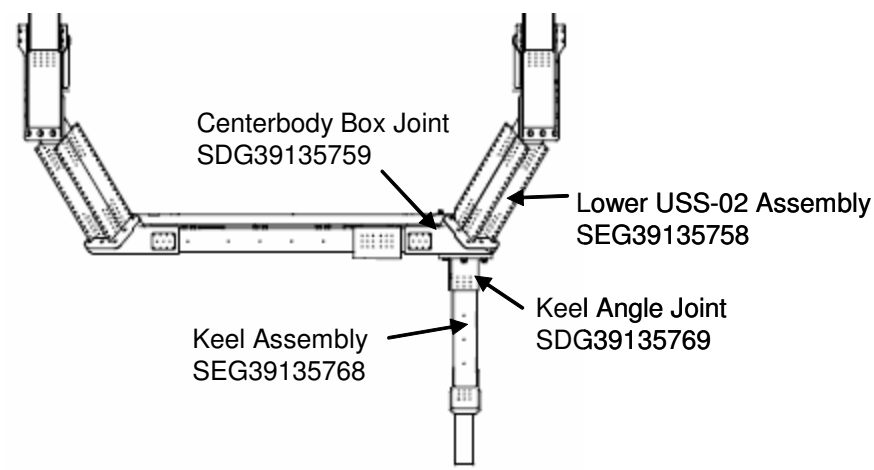

Side View of Keel Assembly and Lower USS-02 Assembly

$N_i := bolt_{i,2} \cdot \frac{1}{in}$ pitch of bolt

$D_i := bolt_{i,1} \cdot in$ bolt diameter

$$At_i := \beta \cdot \left(\frac{D_i - 0.9743 \cdot \frac{1}{N_i}}{2} \right)^2$$ Tensile Area of bolt

$$As_i := \beta \cdot \left(\frac{D_i - 1.299038 \cdot \frac{1}{N_i}}{2} \right)^2$$ Shear Area of bolt

Prepared By	Name	Date	Engineering and Science Contract Group	File Name
	Brent Dyer	10/27/05		KAJ_LwUSS_r3.mcd
Checked By	John Krejci		*Structural Analysis Section*	Drawing No. SEG39135724
Title	Bolts from Keel Angle Joint to Lower USS-02 Assembly			

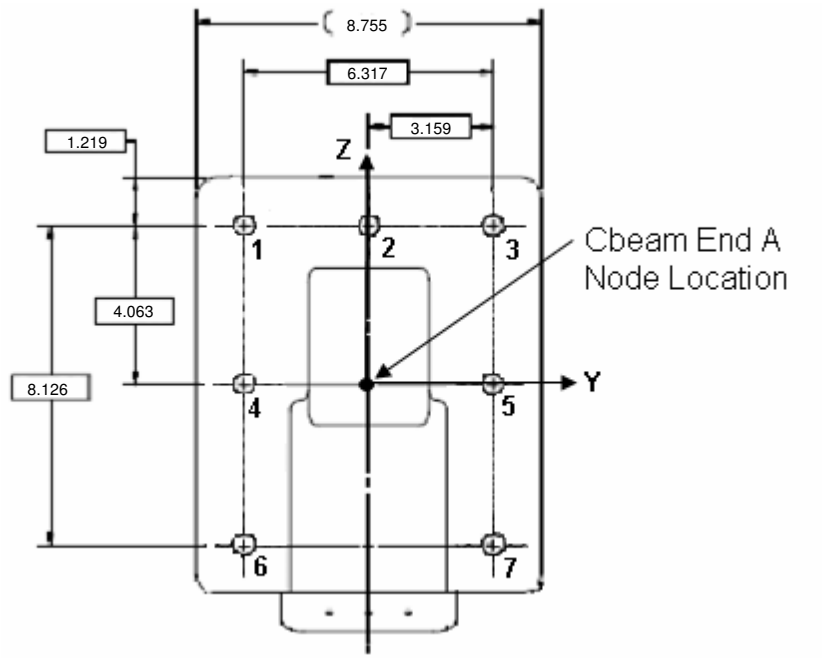

Keel Angle Joint to Lower USS-02 Centerbody Box Joint Bolt Pattern

Bolt no. x co-ord y co-ord z co-ord

$$\begin{pmatrix}1\\2\\3\\4\\5\\6\\7\end{pmatrix} \quad x := \begin{pmatrix}0.0\\0.0\\0.0\\0.0\\0.0\\0.0\\0.0\end{pmatrix}\cdot in \quad y := \begin{pmatrix}-3.159\\0.0\\3.159\\-3.159\\3.159\\-3.159\\3.159\end{pmatrix}\cdot in \quad z := \begin{pmatrix}4.063\\4.063\\4.063\\0.0\\0.0\\-4.063\\-4.063\end{pmatrix} in$$

Location of applied forces and moments

$xforce := 0.0in$ $yforce := 0.0in$ $zforce := 0.0in$

$$cgload := \begin{pmatrix}xforce\\yforce\\zforce\end{pmatrix} \qquad cgload = \begin{pmatrix}0\\0\\0\end{pmatrix} in$$

Center of gravity of bolt group

$$xcg := \frac{\sum_i x_i}{rows(x)} \qquad xcg = 0\,in \qquad ycg := \frac{\sum_i y_i}{rows(y)} \qquad ycg = 0\,in \qquad zcg := \frac{\sum_i z_i}{rows(z)} \qquad zcg = 0.58\,in$$

$$cg_{bolt} := \begin{pmatrix} xcg \\ ycg \\ zcg \end{pmatrix} \qquad cg_{bolt} = \begin{pmatrix} 0 \\ 0 \\ 0.58 \end{pmatrix} in$$

Note: Since the x direction is into the plate the loads are shared equally between the bolts. The bolt pattern is unsymmetric about the z-axis and has an offset of 0.58". The y-axis has a zero offset from the center of gravity.

Load Vector

$$r_{load} := cgload - cg_{bolt} \qquad r_{load} = \begin{pmatrix} 0 \\ 0 \\ -0.58 \end{pmatrix} in$$

Distance from CG of Bolts to Individual Bolts for shear calculations

$$r_i := \sqrt{\left(z_i - zcg\right)^2 + \left(y_i - ycg\right)^2} \qquad r = \begin{pmatrix} 4.702 \\ 3.483 \\ 4.702 \\ 3.212 \\ 3.212 \\ 5.616 \\ 5.616 \end{pmatrix} in$$

Loads model 2-04 was used to retrieve loads at the two bolted interfaces. A Cbeam element located at the center of each keel angle joint was post processed in NASPOST for end A forces and moments in the x, y, and z directions. The Cbeam element identifications for the two bolted interfaces are 66045 and 66046. These loads are read into an array and distributed out to the 7 bolts for each keel angle joint.

(Note: This joint was checked for minimum margins of safety for launch, nominal landing, and abort landing load cases. The nominal landing cases combined with nominal landing temperature data resulted in the lowest minimimum margins of safety. Therefore, the nominal landing cases are used in this analysis.)

Reading database file for bolted joint, nominal landing case

$data := READPRN("keelboltsf_r2_nomland.txt")$

$j := 1..rows(data)$

$num_bolts := rows(bolt)$

Loads from 2-04 loads model, nominal landing case

(Note: These loads are taken from end A of the Cbeam element)

Axial Load $Fx_j := data_{j,7} \cdot lbf$

Torsion $Mx_j := data_{j,8} \cdot in \cdot lbf$

Shear in Y axis $Fy_j := data_{j,5} \cdot lbf$

Moment about Y axis $My_j := data_{j,4} \cdot in \cdot lbf$

Shear in Z axis $Fz_j := data_{j,6} \cdot lbf$

Moment about Z axis $Mz_j := data_{j,3} \cdot in \cdot lbf$

Element Identification $ID_j := data_{j,1}$

$ID_j := ID_j \cdot 1000 + 1$ Counter for number of bolts in pattern

Load Case Number $LC_j := data_{j,2}$

Applied Bending Moment at Bolts $M_j := 0 \cdot in \cdot lbf$

Format of Output File

The stack commands below are used to stack the element identifications (ID) and load cases (LC) in asending order per bolt. The element ID number is located in the first column and the LC numbers in the second column. For each element identification, 66045 and 66046, the bolt number within the bolt pattern is added to the end of each element identification. For example, the element identification number 66045 will have bolt numbers 1 thru 7 attached to the end for all 64 load cases. This brings the total number of load cases to 896 (2 joints x 7 bolts x 64 load cases = 896). See the array example to the right.

$ID := stack(ID, ID+1, ID+2, ID+3, ID+4, ID+5, ID+6)$

$LC := stack(LC, LC, LC, LC, LC, LC, LC)$

$$\begin{array}{cc} ID & LC \\ \end{array}$$
$$\begin{bmatrix} 6604501 & 4001 \\ 6604501 & 4002 \\ \ldots & \ldots \\ 6604501 & 4064 \\ 6604502 & 4001 \\ 6604502 & 4002 \\ \ldots & \ldots \\ 6604502 & 4064 \\ \ldots & \ldots \\ \ldots & \ldots \\ 6604507 & 4001 \\ 6604507 & 4002 \\ \ldots & \ldots \\ 6604507 & 4064 \end{bmatrix}$$

Array Example

Moment Distribution

$$M_{tot}^{\langle j \rangle} := \begin{pmatrix} Mx_j \\ My_j \\ Mz_j \end{pmatrix} + r_{load} \times \begin{pmatrix} Fx_j \\ Fy_j \\ Fz_j \end{pmatrix}$$

Use the cross-product to determine the additional moments acting on the fasteners.

$Mx_boltcg_j := M_{tot_{1,j}}$ $\quad$ $My_boltcg_j := M_{tot_{2,j}}$ $\quad$ $Mz_boltcg_j := M_{tot_{3,j}}$

Tension on bolts

$$Ftdirect_{i,j} := \begin{cases} 0 \cdot lbf & \text{if } Fx_j \le 0lbf \\ \dfrac{Fx_j}{num_bolts} & \text{otherwise} \end{cases}$$

Direct tensile load calculation - (The if statement checks for compression)

$$Fmz_{i,j} := \begin{cases} 0 \cdot lbf & \text{if } (y_i - ycg) = 0 \cdot in \\ \dfrac{\left[Mz_boltcg_j \cdot (y_i - ycg)\right] At_i}{\sum_i \left[(y_i - ycg)^2 \cdot At_i\right]} & \end{cases}$$

$$Fmy_{i,j} := \begin{cases} 0 \cdot lbf & \text{if } (z_i - zcg) = 0 \cdot in \\ \dfrac{My_boltcg_j \cdot (z_i - zcg) \cdot At_i}{\sum_i \left[\left(\left|z_i - zcg\right|\right)^2 \cdot At_i\right]} & \end{cases}$$

$$Ft_{i,j} := Ftdirect_{i,j} + Fmz_{i,j} + Fmy_{i,j}$$

Total Tensile load

Shear on bolts

Secondary shear on bolts $\quad Fs_{i,j} := \dfrac{Mx_boltcg_j \cdot r_i \cdot As_i}{\sum_i \left[(r_i)^2 \cdot (As_i)\right]}$

Direct shear on bolts $\quad Fsd_{i,j} := \dfrac{\sqrt{(Fz_j)^2 + (Fy_j)^2}}{num_bolts}$

Total shear load $\quad Fstot_{i,j} := Fsd_{i,j} + Fs_{i,j}$

The stack commands below are used to stack applied axial load (P), applied shear load (V), and applied moment (M) in asending order per bolt. These loads are put into an array with the element/bolt number and load case number from above. See the "Output" file below.

$$P := \text{stack}\left[\left(Ft^T\right)^{\langle 1\rangle}, \left(Ft^T\right)^{\langle 2\rangle}, \left(Ft^T\right)^{\langle 3\rangle}, \left(Ft^T\right)^{\langle 4\rangle}, \left(Ft^T\right)^{\langle 5\rangle}, \left(Ft^T\right)^{\langle 6\rangle}, \left(Ft^T\right)^{\langle 7\rangle}\right]$$

$$V := \text{stack}\left[\left(Fstot^T\right)^{\langle 1\rangle}, \left(Fstot^T\right)^{\langle 2\rangle}, \left(Fstot^T\right)^{\langle 3\rangle}, \left(Fstot^T\right)^{\langle 4\rangle}, \left(Fstot^T\right)^{\langle 5\rangle}, \left(Fstot^T\right)^{\langle 6\rangle}, \left(Fstot^T\right)^{\langle 7\rangle}\right]$$

$$M := \text{stack}(M, M, M, M, M, M, M)$$

The "Output" file below outputs an array from left to right starting with the element identification (ID), Load case number (LC), applied load on the bolt (P), applied shear on the bolt (V), and applied moment on the bolt (M). See the output array example below. The array is then written to a text file.

$$\text{Output} := \text{augment}\left(ID, LC, \frac{P}{lbf}, \frac{V}{lbf}, \frac{M}{in \cdot lbf}\right)$$

(Note: Since the ID and LC numbers are dimensionless, the P, V, and M values are divided by their units in order to make the array dimensionless.)

$$\begin{array}{ccccc} ID & LC & P & V & M \end{array}$$
$$\begin{bmatrix} 6604501 & 4001 & -1068.05 & -358.78 & 0 \\ 6604501 & 4002 & -1110.33 & -465.51 & 0 \\ \ldots & \ldots & \ldots & \ldots & \ldots \\ 6604501 & 4064 & -699.99 & -439.08 & 0 \\ 6604502 & 4001 & -813.60 & -263.63 & 0 \\ 6604502 & 4002 & -977.16 & -342.06 & 0 \\ \ldots & \ldots & \ldots & \ldots & \ldots \\ 6604502 & 4064 & -658.71 & -322.63 & 0 \\ \ldots & \ldots & \ldots & \ldots & \ldots \\ \ldots & \ldots & \ldots & \ldots & \ldots \\ 6604507 & 4001 & 1470.8 & -358.78 & 0 \\ 6604507 & 4002 & 1166.08 & -465.51 & 0 \\ \ldots & \ldots & \ldots & \ldots & \ldots \\ 6604507 & 4064 & 699.99 & -439.07 & 0 \end{bmatrix}$$

Example of Output Array

Size of the "Output" Array: $\text{rows}(\text{Output}) = 896$

(7 bolts x 64 load cases) x 2 joints = 896 load cases

(Note: The output array to the left is an example of the array format. The loads in this example are for format purposes only and should NOT be used in this analysis.)

WRITEPRN("output_forces_keelbolts_r2_nomland.txt") := Output

Prepared By	Name	Date		File Name
	Brent Dyer	10/27/05		KAJ_LwUSS_r3.mcd
Checked By	John Krejci		**Engineering and Science Contract Group** *Structural Analysis Section*	Drawing No. SEG39135724
Title	Bolts from Keel Angle Joint to Lower USS-02 Assembly			

CHECK BOLTS (bolts SDG39135892-807, EWB 0420-8, 0.50-20UNJF-3A, Material-A-286), Insert MS51831CA206L, Washer NAS1587-8C

data := READPRN("output_forces_keelbolts_r2_nomland.txt")

s := 1 .. rows(data)

Flange 1: Keel Angle Joint
Part number:SDG39135769
Material: 7050-T7451

Flange 2: Lower USS Centerbody
Part number: SEG39135759
Material: 7050-T7451

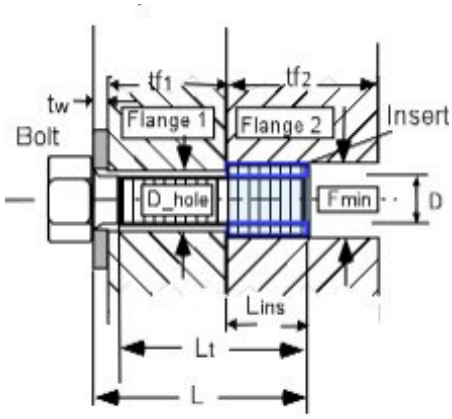

Loads

Applied tensile load	$P_s := data_{s,3} \cdot lbf$	Element Identification	$ID_s := data_{s,1}$
Applied shear load	$V_s := data_{s,4} \cdot lbf$	Load Case Number	$LC_s := data_{s,2}$
Applied bending moment	$M_s := data_{s,5} \cdot in \cdot lbf$		

Factors of Safety

Ultimate	SFu := 1.4	Yield	SFy := 1.1
Joint Separation	SFsep := 1.2	Fitting factor	FF := 1.15

Temperature Data (Ref Appendix C2), Nominal Landing Case

Assembly	$Temp_initial := 70 \cdot deg$
Maximum	$Temp_max := 173 \cdot deg$
Minimum	$Temp_min := -53 \cdot deg$

Bolt and Insert Data

Nominal diameter of bolt	$D := 0.500 \cdot in$	Number of threads/inch	$Nt := 20 \cdot \frac{1}{in}$
Total length of bolt	$L := 1.651 \cdot in$	Length of insert	$Lins := 0.688 \cdot in$
Threaded length	$Lt := 0.838 \cdot in$	Min. external diameter of insert	$Fmin := 0.615 \cdot in$
(If bolt is fully threaded, input Lt = L)		Depth of recess for insert	$lr := 0.02 \cdot in$

This file uses the calculations shown in \\escfil02\2i11_mathcad\8307_bolts\thread_data.mcd

Thread Data File

Prepared By	Name	Date	Engineering and Science Contract Group	File Name
	Brent Dyer	10/27/05		KAJ_LwUSS_r3.mcd
Checked By	John Krejci		*Structural Analysis Section*	Drawing No. SEG39135724
Title	Bolts from Keel Angle Joint to Lower USS-02 Assembly			

Washer Data

Thickness of washer $tw := 0.078 \cdot in$

Outer Diameter of washer $Dw := .875in$

Inner Diameter of washer $Dwi := 0.515 \cdot in$

Bolt head dia. across flats (used only if there is no washer) $dw := 0.823 \cdot in$

Flange data

Thickness of flange 1 (Ref. SDG39135769) $tf1 := .750 \cdot in$

Thickness of flange 2 (Ref. SDG39135759) $tf2 := .688in$ (Insert Length)

Diameter of hole $D_hole := 0.539 \cdot in$

Note: If there is no washer, tw, Dw, and Dwi should be zero.

Material Property Data

Bolt

Temperature correction factor for bolt strength ultimate (Ref. MIL-HDBK-5J, fig. 6.2.1.1.1) $TSu_bolt := .96$ yield $TSy_bolt := .96$

Bolt ultimate tensile allowable stress $Ftu_bolt := 200000 \cdot psi$

Bolt ultimate shear allowable stress $Fsu_bolt := 0.6 \cdot Ftu_bolt$

Bolt yield tensile allowable $Fty_bolt := 180000 \cdot psi$

Temperature correction factor for bolt modulus $TE_bolt := .97$ (Ref. MIL-HDBK-5J, fig. 6.2.1.1.4(a))

Modulus of elasticity of bolt $E_bolt := \left(29.1 \cdot 10^{6} \cdot psi\right)$ (Ref. MIL-HDBK-5J, table 6.2.1.0(b))

Thermal coeffecient for bolt: (Ref. MIL-HDBK-5J, fig. 6.2.1.0) $u_bolt_hot := 9.1 \cdot 10^{-6} \cdot \frac{\frac{in}{in}}{deg}$ $u_bolt_cold := 8.6 \cdot 10^{-6} \cdot \frac{\frac{in}{in}}{deg}$

Insert

Temperature correction factor for insert strength $TS_ins := .96$ (Ref. MIL-HDBK-5J, fig. 6.2.1.1.1)

Ultimate tensile allowable stress $Ftu_ins := 140000 \cdot psi$ (Ref. MS51831)

Ultimate shear allowable stress $Fsu_ins := 0.6 \cdot Ftu_ins$

Washer

Temperature correction factor for washer modulus $TE_washer := .96$ (Ref. MIL-HDBK-5J, fig. 6.2.1.1.1)

Modulus of elasticity of washer $E_washer := \left(29.1 \cdot 10^{6} \cdot psi\right)$ (Ref. MIL-HDBK-5J, table 6.2.1.0(b))

Flanges

Stiffness of the joint depends upon number of members in the grip of the fasteners, Modulus of elasticity of these members, and diameters of the bolt and the washer.

Temperature correction factor for flange 1 $Tf1E := .96$ (modulus) (Ref. MIL-HDBK-5J, fig. 3.7.6.1.4 and Appendix C9)

Temperature correction factor for flange 2 $Tf2E := .96$ (modulus)

$Tf2s := .89$ (strength) (Ref. MIL-HDBK-5J, fig. 3.7.4.2.1)

Shear Strength Allowable for flanges $Fsu_f2 := 44000 \cdot psi$ (Ref. MIL-HDBK-5J, table 3.7.4.0(b1))

Modulus of elasticity for the parts in the joint (Ref. MIL-HDBK-5J, table 3.7.4.0(b1)) $E_flange1 := \left(10.3 \cdot 10^{6} \cdot psi\right)$ $E_flange2 := \left(10.3 \cdot 10^{6} \cdot psi\right)$

Coefficient of thermal expansion for flanges (Ref. MIL-HDBK-5J, table 3.7.4.0(b1) and Appendix C9)

$u_flange1_hot := 12.8 \cdot 10^{-6} \cdot \frac{\frac{in}{in}}{deg}$ $u_flange2_hot := 12.8 \cdot 10^{-6} \cdot \frac{\frac{in}{in}}{deg}$

$u_flange1_cold := 12.1 \cdot 10^{-6} \cdot \frac{\frac{in}{in}}{deg}$ $u_flange2_cold := 12.1 \cdot 10^{-6} \cdot \frac{\frac{in}{in}}{deg}$

Torque/Preload data

Maximum torque (62% of yield) $Tmax := 1339 \cdot in \cdot lbf$

Minimum torque (95% of max. torque) $Tmin := 1272 \cdot in \cdot lbf$

Torque coefficient: $k := 0.15$

Loading plane factor: $n := .5$

Preload Uncertainty: $:= 0.25$

This file uses the calculations shown in \\escfil02\2i11_mathcad\8307_bolts\multi_bolt_stiffness_insert_RevC

Insert Stiffness File

Prepared By	Name	Date	Engineering and Science Contract Group	File Name
	Brent Dyer	10/27/05		KAJ_LwUSS_r3.mcd
Checked By	John Krejci		*Structural Analysis Section*	Draw ing No. SEG39135724
Title	Bolts from Keel Angle Joint to Lower USS-02 Assembly			

Bolt Load data

Bolt/joint stiffness factor	$= = 0.392$	Preload due to temperature	$Pthr_pos = 1455.7\ lbf$
Max. preload	$PLDmax = 23772.4\ lbf$		$Pthr_neg = -1644.4\ lbf$
Min. preload	$PLDmin = 9959.7\ lbf$	Uncertainty factor	$= 0.25$
Joint separation load	$max(Psep) = 2259.897\ lbf$	Torque coefficient	$k = 0.15$
Max. load on the bolt(ultimate)	$max(Pb) = 24366.3\ lbf$	Loading plane factor	$n = 0.5$
Max. load on the bolt(yield)	$max(Pby) = 24239\ lbf$	Thread shear pullout load of bolt or insert	$Pths = 47551.9\ lbf$
Bolt ultimate tensile strength	$PAt = 30159.1\ lbf$	Thread shear pullout load in parent metal	$Ppths = 26027.1\ lbf$

$Length_check$ = "Bolt length is sufficient"

Summary of Margins for bolt:

Joint separation	$MS_min_{1,1} = 3.766$	Direct Thread shear Ultimate	$MS_min_{6,1} = 7.584$
Direct Tension Ultimate	$MS_min_{2,1} = 8.947$	Total Thread shear Ultimate	$MS_min_{7,1} = 0.068$
Direct Tension Yield	$MS_min_{3,1} = 10.000$	Shear Ultimate	$MS_min_{8,1} = 3.13$
Total Tension Ultimate	$MS_min_{4,1} = 0.238$	Bending Ultimate	$MS_min_{9,1} = 10$
Total Tension Yield	$MS_min_{5,1} = 0.120$	Combined shear, tension and bending ultimate	$MS_min_{10,1} = 0.226$

Determination of the smallest margin of safety for the bolt, and the failure mode:

$MSbolt := min(MS)$

$MSbolt = 0.068$ Minimum Margin of Safety

$Failure_Mode$ = "Total Thread Shear Ultimate"

$MS_min_ID = 66046006$	Element Identification (66045) and Bolt Number (1) for Minimum Margin
$MS_min_LC = 4020$	Load Case Number for Minimum Margin
$MS_min_P = 1883.2$	Applied Tensile Load for Minimum Margin
$MS_min_V = 1752.1$	Applied Shear Load for Minimum Margin
$MS_min_M = 0$	Applied Bending Moment for Minimum Margin

Bolt Fail-Safe Analysis for Keel Angle Joint to Lower USS-02 Centerbody Box Joint

Since bolt number 1 has the lowest margin of safety it is assumed that this bolt will be the first bolt to fail. There are now 6, EWB0420 0.50-20 UNFJ fasteners, holding the Keel Angle Joint to the Lower USS-02 Centerbody Box Joint. The drawing number for the USS-02 Assembly is SDG39135724.

size thread/in

$$bolt2 := \begin{pmatrix} 0.50 & 20 \\ 0.50 & 20 \\ 0.50 & 20 \\ 0.50 & 20 \\ 0.50 & 20 \\ 0.50 & 20 \end{pmatrix}$$

$s := 1 .. rows(bolt2)$

$N2_s := bolt2_{s,2} \cdot \frac{1}{in}$ pitch of bolt

$D2_s := bolt2_{s,1} \cdot in$ bolt diameter

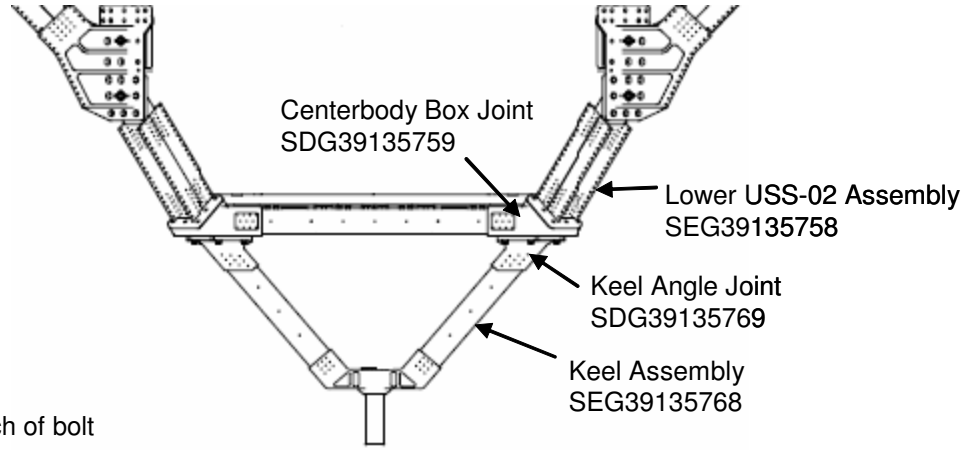

Front View of Keel Assembly and Lower USS-02 Assembly

Tensile Area of bolt

$$At2_s := \beta \cdot \left(\frac{D2_s - 0.9743 \cdot \frac{1}{N2_s}}{2} \right)^2$$

Shear Area of bolt

$$As2_s := \beta \cdot \left(\frac{D2_s - 1.299038 \cdot \frac{1}{N2_s}}{2} \right)^2$$

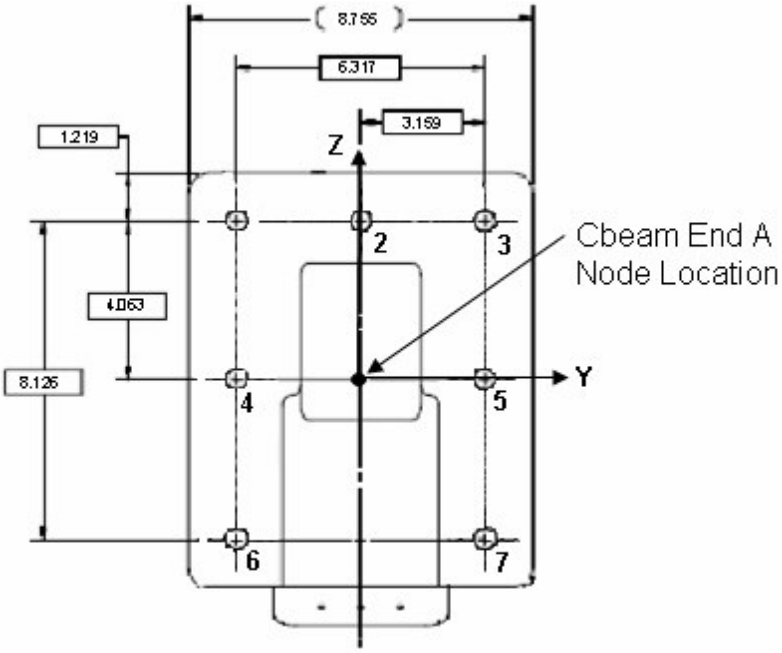

Keel Angle Joint to Lower USS-02 Centerbody Box Joint Bolt Pattern

Bolt no. x co-ord y co-ord z co-ord

$$\begin{pmatrix} 2 \\ 3 \\ 4 \\ 5 \\ 6 \\ 7 \end{pmatrix} \quad x2 := \begin{pmatrix} 0.0 \\ 0.0 \\ 0.0 \\ 0.0 \\ 0.0 \\ 0.0 \end{pmatrix} \cdot in \quad y2 := \begin{pmatrix} 0.0 \\ 3.159 \\ -3.159 \\ 3.159 \\ -3.159 \\ 3.159 \end{pmatrix} \cdot in \quad z2 := \begin{pmatrix} 4.063 \\ 4.063 \\ 0.0 \\ 0.0 \\ -4.063 \\ -4.063 \end{pmatrix} in$$

Location of applied forces and moments

$xforce2 := 0.0in \qquad yforce2 := 0.0in \qquad zforce2 := 0.0in$

$$cgload2 := \begin{pmatrix} xforce2 \\ yforce2 \\ zforce2 \end{pmatrix} \qquad cgload2 = \begin{pmatrix} 0 \\ 0 \\ 0 \end{pmatrix} in$$

Center of gravity of bolt group

$$xcg2 := \frac{\sum_s x2_s}{rows(x2)} \quad xcg2 = 0\,in \quad ycg2 := \frac{\sum_s y2_s}{rows(y2)} \quad ycg2 = 0.526\,in \quad zcg2 := \frac{\sum_s z2_s}{rows(z2)} \quad zcg2 = 0\,in$$

$$cg_{bolt2} := \begin{pmatrix} xcg2 \\ ycg2 \\ zcg2 \end{pmatrix} \qquad cg_{bolt2} = \begin{pmatrix} 0 \\ 0.526 \\ 0 \end{pmatrix} in$$

Note: Since the x direction is into the plate the loads are shared equally between the bolts. However, due to a failure in bolt 1, the y direction in the bolt pattern is unsymmetric and has a offset from the center of gravity.

Load Vector

$$r_{load2} := cgload2 - cg_{bolt2} \qquad r_{load2} = \begin{pmatrix} 0 \\ -0.526 \\ 0 \end{pmatrix} in$$

Distance from CG of Bolts to Individual Bolts for shear calculations

$$r2_s := \sqrt{\left(z2_s - zcg2\right)^2 + \left(y2_s - ycg2\right)^2}$$

$$r2_s = \begin{pmatrix} 4.097 \\ 4.841 \\ 3.685 \\ 2.632 \\ 5.486 \\ 4.841 \end{pmatrix} in$$

Reading database file for bolted joint, nominal landing case

$data := READPRN("keelboltsf_r2_nomland.txt")$

$q := 1 .. rows(data)$ $\quad num_bolts2 := rows(bolt2)$

Loads from 2-04 loads model, nominal landing case

Axial Load $\quad Fx2_q := data_{q,7} \cdot lbf$

Shear in Y axis $\quad Fy2_q := data_{q,5} \cdot lbf$

Shear in Z axis $\quad Fz2_q := data_{q,6} \cdot lbf$

Element Identification $\quad ID2_q := data_{q,1}$

Load Case Number $\quad LC2_q := data_{q,2}$

Torsion $\quad Mx2_q := data_{q,8} \cdot in \cdot lbf$

Moment about Y axis $\quad My2_q := data_{q,4} \cdot in \cdot lbf$

Moment about Z axis $\quad Mz2_q := data_{q,3} \cdot in \cdot lbf$

$ID2_q := ID2_q \cdot 1000 + 1$ Counter for number of bolts in pattern

Applied Bending Moment at Bolts $\quad M2_q := 0 \cdot in \cdot lbf$

Format of Output File

The stack command below is used to stack the element identifications (ID2) and load cases (LC2) in asending order per bolt.See the array example above for explanation. Note: bolt number 1 is not included.

$ID2 := stack(ID2 + 1, ID2 + 2, ID2 + 3, ID2 + 4, ID2 + 5, ID2 + 6)$

$LC2 := stack(LC2, LC2, LC2, LC2, LC2, LC2)$

Moment Distribution

$$M_{tot2}^{\langle q \rangle} := \begin{pmatrix} Mx2_q \\ My2_q \\ Mz2_q \end{pmatrix} + r_{load2} \times \begin{pmatrix} Fx2_q \\ Fy2_q \\ Fz2_q \end{pmatrix}$$

Use the cross-product to determine the additional moments acting on the fasteners.

$$Mx_boltcg2_q := M_{tot2_{1,q}} \qquad My_boltcg2_q := M_{tot2_{2,q}} \qquad Mz_boltcg2_q := M_{tot2_{3,q}}$$

Tension on bolts

$$Ftdirect2_{s,q} := \begin{cases} 0 \cdot lbf & \text{if } Fx2_q \le 0lbf \\ \dfrac{Fx2_q}{num_bolts2} & \text{otherwise} \end{cases}$$

Direct tensile load calculation

$$Fmz2_{s,q} := \begin{cases} 0 \cdot lbf & \text{if } \left(y2_s - ycg2\right) = 0 \cdot in \\ \dfrac{\left[Mz_boltcg2_q \cdot \left(y2_s - ycg2\right)\right] At2_s}{\sum_s \left[\left(y2_s - ycg2\right)^2 \cdot At2_s\right]} & \end{cases}$$

$$Fmy2_{s,q} := \begin{cases} 0 \cdot lbf & \text{if } \left(z2_s - zcg2\right) = 0 \cdot in \\ \dfrac{My_boltcg2_q \cdot \left(z2_s - zcg2\right) \cdot At2_s}{\sum_s \left[\left(\left|z2_s - zcg2\right|\right)^2 \cdot At2_s\right]} & \end{cases}$$

$$Ft2_{s,q} := Ftdirect2_{s,q} + Fmz2_{s,q} + Fmy2_{s,q}$$

Total Tensile load

Shear on bolts

Secondary shear on bolts $$Fs2_{s,q} := \frac{Mx_boltcg2_q \cdot r2_s \cdot As2_s}{\sum_s \left[\left(r2_s\right)^2 \cdot \left(As2_s\right)\right]}$$

Direct shear on bolts $$Fsd2_{s,q} := \frac{\sqrt{\left(Fz2_s\right)^2 + \left(Fy2_s\right)^2}}{num_bolts2}$$

Total shear load $$Fstot2_{s,q} := Fsd2_{s,q} + Fs2_{s,q}$$

The stack commands below are used to stack apllied axial load (P2), applied shear load (V2), and applied moment (M2) in asending order per bolt. These loads are put into an array with the element/bolt number and load case number from above. See the "Output2" file below. Notice how there is only 6 bolts, since bolt number 1 is not included.

$$P2 := \text{stack}\left[\left(Ft2^T\right)^{\langle 1\rangle}, \left(Ft2^T\right)^{\langle 2\rangle}, \left(Ft2^T\right)^{\langle 3\rangle}, \left(Ft2^T\right)^{\langle 4\rangle}, \left(Ft2^T\right)^{\langle 5\rangle}, \left(Ft2^T\right)^{\langle 6\rangle}\right]$$

$$V2 := \text{stack}\left[\left(Fstot2^T\right)^{\langle 1\rangle}, \left(Fstot2^T\right)^{\langle 2\rangle}, \left(Fstot2^T\right)^{\langle 3\rangle}, \left(Fstot2^T\right)^{\langle 4\rangle}, \left(Fstot2^T\right)^{\langle 5\rangle}, \left(Fstot2^T\right)^{\langle 6\rangle}\right]$$

$$M2 := \text{stack}(M2, M2, M2, M2, M2, M2)$$

The "Output2" file below outputs an array from left to right starting with the element identification (ID2), Load case number (LC2), applied load on the bolt (P2), applied shear on the bolt (V2), and applied moment on the bolt (M2). See the output array example above. The array is written to a text file.

$$Output2 := \text{augment}\left(ID2, LC2, \frac{P2}{lbf}, \frac{V2}{lbf}, \frac{M2}{in \cdot lbf}\right)$$

(Note: Since the ID2 and LC2 numbers are dimensionless, the P2, V2, and M2 values are divided by their units in order to make the array dimensionless.)

Size of the "Output2" Array: $\text{rows}(Output2) = 768$

(6 bolts x 64 load cases) x 2 joints = 768 load cases

$$\text{WRITEPRN}(\text{"output_forces_keelbolts_r2_nomland_fs.txt"}) := Output2$$

Bolt Fail-safe Results

The array from the text file above is read:

$$data_fs := \text{READPRN}(\text{"output_forces_keelbolts_r2_nomland_fs.txt"})$$

$$s := 1 .. \text{rows}(data_fs)$$

Fail-safe Loads, nominal landing

Applied tensile load $P_FS_s := data_fs_{s,3} \cdot lbf$ $ID_FS_s := data_fs_{s,1}$

Applied shear load $V_FS_s := data_fs_{s,4} \cdot lbf$ $LC_FS_s := data_fs_{s,2}$

Applied bending moment $M_FS_s := data_fs_{s,5} \cdot in \cdot lbf$

Fail-safe Factors of Safety

Ultimate $SFu_FS := 1.0$

Joint Separation $SFsep_FS := 1.0$

This file uses the calculations shown in \\escfil02\2i11_mathcad\8307_bolts\ multi_bolt_stiffness_insert_FS_RevC

Fail-Safe Stiffness File

Bolt Fail-safe Load data

Joint separation load $\max(Psep_FS) = 2766.612\,lbf$ $\max(P_FS) = 2766.612\,lbf$

Max. load on the bolt(ultimate) $\max(Pb_FS) = 24395.6\,lbf$ $\max(V_FS) = 2104.709\,lbf$

Summary of fail-safe Margins for bolt:

Joint separation	$MS_minFS_{1,1} = 2.893$	Total Thread shear Ultimate	$MS_minFS_{5,1} = 0.067$
Direct Tension Ultimate	$MS_minFS_{2,1} = 8.479$	Shear Ultimate	$MS_minFS_{6,1} = 6.08$
Total Tension Ultimate	$MS_minFS_{3,1} = 0.236$	Bending Ultimate	$MS_minFS_{7,1} = 10$
Direct Thread shear Ultimate	$MS_minFS_{4,1} = 7.18$	Combined shear, tension and bending ultimate	$MS_minFS_{8,1} = 0.2351$

Determination of the smallest fail-safe margin of safety for the bolt, and the failure mode:

$MSbolt_FS := \min(MS_FS)$

$MSbolt_FS = 0.067$ Failure_Mode_FS = "Total Thread Shear Ultimate"

$MS_min_ID = 66045003$	Element Identification (66045) and Bolt Number (2) for Minimum Margin
$MS_min_LC = 4015$	Load Case Number for Minimum Margin
$MS_min_P = 2766.6$	Applied Tensile Load for Minimum Margin
$MS_min_V = 1490.7$	Applied Shear Load for Minimum Margin
$MS_min_M = 0$	Applied Bending Moment for Minimum Margin

2.4.3.2 Keel Retainer to Keel Trunnion and Keel Block

Keel Retainer to Keel Trunnion and Keel Block Bolt Analysis

The Keel Assembly consists of one keel retainer to keel trunnion interface. There are a total of 8 fasteners attaching the Keel Retainer to the Keel Trunnion. These 8 fasteners are NAS8103PU8 (160 ksi), 0.190-32 UNF. The Keel Assembly also consist of one keel retainer to keel block interface. There are a total of 8 fasteners attaching the Keel Retainer to the Keel Block. These 8 fasteners are HTH1978-3-3 (200 ksi), 0.190-32 UNJF. The drawing number for the Keel Assembly is SEG39135768.

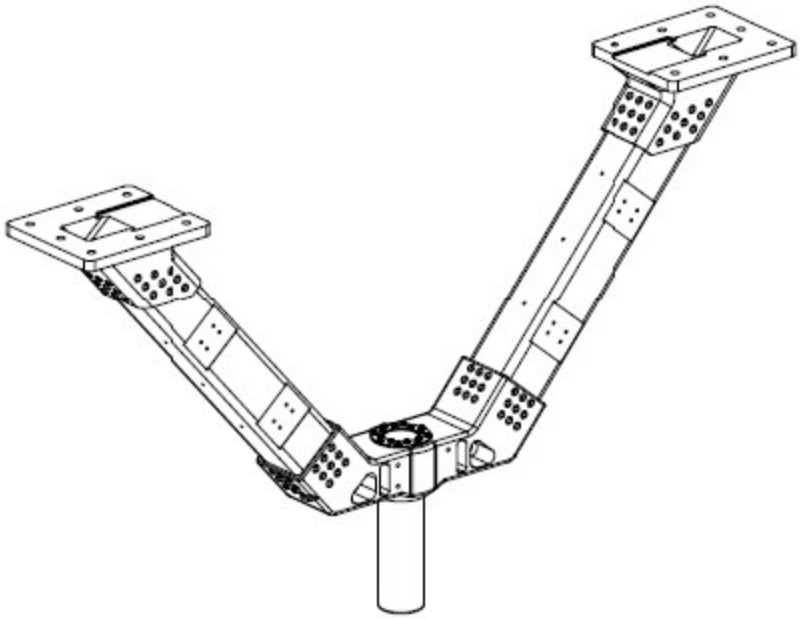

ISO View of USS-02 Keel Assembly - SDG39135768

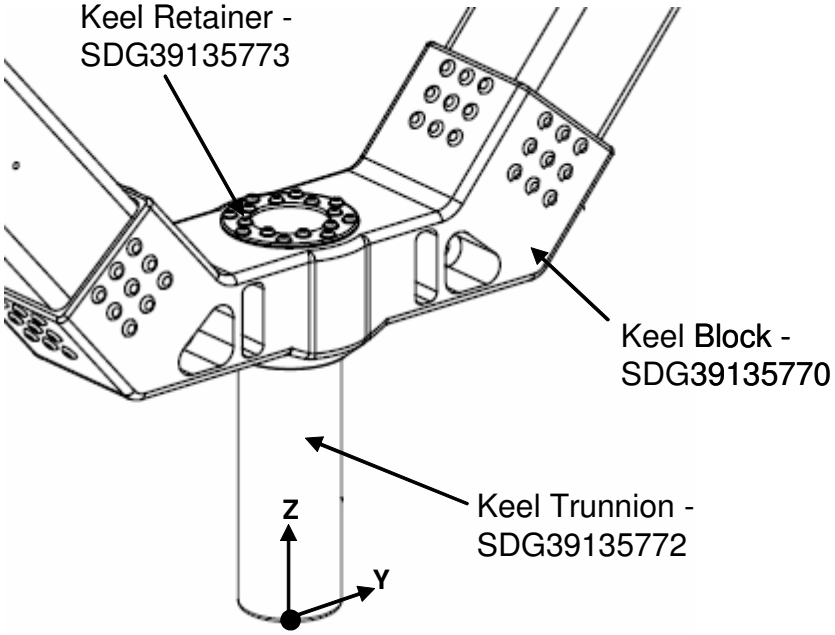

ISO View of the components for USS-02 Keel Assembly - SDG39135768

NASPOST Results

The following NASPOST results were sorted for maximum forces in the y-direction for all trunnions. The keel trunnion has element ID 5 in the loads model (Ref. Appendix A2 for NASPOST sort):

```
                                        +++ MAX Y LAUNCH TRUNNION FORCES +++

 ID    SUBCASE       FX            FY            FZ

   5     1060  0.000000E+00  2.411519E+04  0.000000E+00
                                        +++ MAX Y ABORT LANDING TRUNNION FORCES +++

 ID    SUBCASE       FX            FY            FZ

   5     2017  0.000000E+00  9.118636E+03  0.000000E+00

                                        +++ MAX Y NOMLANDING TRUNNION FORCES +++

 ID    SUBCASE       FX            FY            FZ

   5     4051  0.000000E+00  1.559590E+04  0.000000E+00
```

Maximum Load for Keel Retainer to Keel Trunnion Interface:

Due to temperature and friction, a percent of the normal load (Pr) is used for calculating the axial load (Pf) to the trunnion.

The launch case 1060 from above, has an normal load of 24115.9 lbf at a minimum temperature of 40F. At 40F this gives a coeffient of friction of .100, per the table in Appendix C7. The axial load is then 10% of the 24115.9 lbf normal load. The axial load is then 2411.59 lbf.

The launch case 4051 from above, has an normal load of 15595.9 lbf at a minimum temperature of -56F. At -56F this gives a coeffient of friction of .168, per the table in Appendix C7. The axial load is then 16.8% of the 15595.9 lbf normal load. The axial load is then 2620.1 lbf. Therefore the nominal landing case is used in this analysis. Reference section 2.3.4 "Keel Trunnion" for the keel trunnion analysis.

Normal load in y direction $Pr := 15595.9 \cdot lbf$ (Ref.AMS-02, loads model 2-04, Load case 4051, element ID 5, data file: maxtrunnionforces4000.lis)

Axial Friction load 16.8% of load $Pf := Pr \cdot 0.168$ $Pf = 2620.1 \cdot lbf$

The 8 bolts attaching the keel retainer to the keel trunnion share an equal amouint of the axial load due to friction.

Number of Bolts $nb := 8$

Applied tensile load on each bolt $P := \frac{Pf}{nb}$ $P = 328 \cdot lbf$

Prepared By	Name	Date	Engineering and Science Contract Group	File Name
	Brent Dyer	11/10/05		Keel_Trunnion_r3.mcd
Checked By	C. Bala		*Structural Analysis Section*	Drawing No. SEG39135768
Title	Bolts from Keel Retainer to Keel Trunnion and Keel Block			

CHECK BOLTS: Keel Retainer to Keel Trunnion (NAS8103PU8 Material-A-286 CRES), Tapped hole .190-32UNJF-3B, Washer NAS1149E0332R

Flange 1:Keel Retainer
Part number: SDG39135773
Material: CRES 15-5PH H1025

Flange 2:Keel Trunnion
Part number SDG39135772
Material: Custom 455 H1000

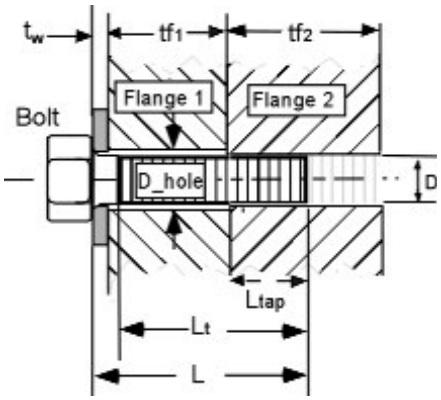

Loads - 4051 Nominal Landing Case

Applied tensile load $P = 328 \cdot lbf$

Applied shear load $V := 0lbf$

Applied bending moment: $M := 0in \cdot lbf$

Factors of Safety

Ultimate: $SFu := 1.4$ Yield $SFy := 1.1$

Joint Separation $SFsep := 1.2$ Fitting factor $FF := 1.15$

Temperature Data (Ref Appendix C2), Nominal Landing Case

Assembly $Temp_initial := 70 \cdot deg$

Maximum $Temp_max := 181 \cdot deg$

Minimum $Temp_min := -56 \cdot deg$

Bolt and tapped hole Data

Nominal diameter of bolt $D := .190 \cdot in$

Total length of bolt $L := 0.5 \cdot in$

Threaded length $Lt := L$

(If bolt is fully threaded, input Lt = L)

Number of threads/inch $Nt := 32 \cdot \frac{1}{in}$

Depth of bolt into tapped hole $Ltap := 0.375 \cdot in$

This file uses the calculations shown in \\escfil02\2i11_mathcad\8307_bolts\thread_data.mcd

Tue Feb 15 10:29:25 AM 2005

Washer Data

Thickness of washers $tw := .032 \cdot in$

Outer Diameter of washer $Dw := 0.438in$

Inner Diameter of washer $Dwi := 0.203 \cdot in$

Bolt head dia. across flats $dw := .357 \cdot in$

Note: If there is no washer, tw, Dw and Dwi should be zero.
(used only if there is no washer)

Flange data

Thickness of flange 1 (Ref. SDG39135773) $tf1 := 0.125 \cdot in$

Thickness of flange 2 (Ref. SDG39135772) $tf2 := .375in$ (Depth of tapped hole)

Diameter of hole $D_hole := .213 \cdot in$

Material Property Data

Bolt

Temperature correction factor for bolt strength ultimate (Ref. MIL-HDBK-5J, fig. 6.2.1.1.1) $TSu_bolt := .97$ Yield $TSy_bolt := .97$

Bolt ultimate tensile allowable stress $Ftu_bolt := 160000 \cdot psi$ (Ref. AMS 5726)

Bolt ultimate shear allowable stress $Fsu_bolt := 0.6 \cdot Ftu_bolt$

Bolt yield tensile allowable stress $Fty_bolt := 120000 \cdot psi$ (Ref. AMS 5726)

Temperature correction factor for bolt modulus $TE_bolt := .97$ (Ref. MIL-HDBK-5J, fig. 6.2.1.1.4(a))

Modulus of elasticity of bolt $E_bolt := \left(29.1 \cdot 10^{6} \cdot psi\right)$ (Ref. MIL-HDBK-5J, table 6.2.1.0(b))

Thermal coeffecient for bolt (Ref. MIL-HDBK-5J, fig. 6.2.1.0) $\beta_bolt_hot := 9.1 \cdot 10^{-6} \cdot \frac{\frac{in}{in}}{deg}$ $\beta_bolt_cold := 8.6 \cdot 10^{-6} \cdot \frac{\frac{in}{in}}{deg}$

Washer

Temperature correction factor for washer modulus $TE_washer := .97$ (Ref. MIL-HDBK-5J, fig. 6.2.1.1.4(a))

Modulus of elasticity of washer $E_washer := \left(29.1 \cdot 10^{6} \cdot psi\right)$ (Ref. MIL-HDBK-5J, table 6.2.1.0(b))

Flanges

Stiffness of the joint depends upon number of members in the grip of the fasteners,
Modulus of elasticity of these members, and diameters of the bolt and the washer.

Temperature correction factor for flange 1 modulus $Tf1E := .99$ (Ref. MIL-HDBK-5J, fig. 2.6.7.1.4)

Temperature correction factor for flange 2 modulus $Tf2E := .99$ (Ref. MIL-HDBK-5J, fig. 2.6.7.1.4 and Appendix C11)

Modulus of elasticity for the parts in the joint (Ref. MIL-HDBK-5J, table 2.6.7.0(c) and table 2.6.4.0 (b))

$E_flange1 := \left(28.5 \cdot 10^{6} \cdot psi\right)$ $E_flange2 := \left(28.9 \cdot 10^{6} \cdot psi\right)$

Coefficient of thermal expansion for flanges (For flange 1 Ref. MIL-HDBK-5J, table 2.6.7.0(H1075) and Appendix C12)

$\beta_flange1_hot := 6.3 \cdot 10^{-6} \cdot \frac{\frac{in}{in}}{deg}$ $\beta_flange2_hot := 5.8 \cdot 10^{-6} \cdot \frac{\frac{in}{in}}{deg}$

(For flange 2 Ref. MIL-HDBK-5J, table 2.6.4.0 (H950) and Appendix C11)

$\beta_flange1_cold := 5.9 \cdot 10^{-6} \cdot \frac{\frac{in}{in}}{deg}$ $\beta_flange2_cold := 5.5 \cdot 10^{-6} \cdot \frac{\frac{in}{in}}{deg}$

Flange with tapped hole

Temperature correction factor for flange with tapped hole strength (Ref. MIL-HDBK-5J, fig. 2.6.4.2.1) $TS_f2 := .97$

Tension allowable ultimate $Ftu_f2 := 200000 \cdot psi$ (Ref. MIL-HDBK-5J, table 2.6.4.0(b))

Shear allowable $Fsu_f2 := 124000 \cdot psi$ (Ref. MIL-HDBK-5J, table 2.6.4.0(b))

Torque/Preload data

Maximum torque (60% of yield) $Tmax := 41.0 \cdot in \cdot lbf$

Minimum torque (95% of max. torque) $Tmin := 39.0 \cdot in \cdot lbf$

Torque coefficient $k := 0.15$

Loading plane factor $n := 0.5$

Preload Uncertainty $u := 0.25$

This file uses the calculations shown in \\escfil02\2i11_mathcad\8307_bolts\bolt_stiffness_tap_RevC

Mon Feb 14 12:25:48 2005

Bolt Load data

Bolt/joint stiffness factor	$= 0.104$	Preload due to temperature	$Pthr_pos = 261.6 \cdot lbf$
Max. preload	$PLDmax = 2059.8 \cdot lbf$		$Pthr_neg = -243.8 \cdot lbf$
Min. preload	$PLDmin = 692.6 \cdot lbf$	Uncertainty factor	$u = 0.25$
Joint separation load	$Psep = 393.017 \cdot lbf$	Torque coefficient	$k = 0.15$
Max. load on the bolt(ultimate)	$Pb = 2087.2 \cdot lbf$	Loading plane factor	$n = 0.5$
Max. load on the bolt(yield)	$Pby = 2081.4 \cdot lbf$	Thread shear pullout required to develop full strength of bolt	$PAs = 3584.9 \cdot lbf$
Bolt ultimate tensile strength	$PAt = 2987.4 \cdot lbf$	Actual thread shear pullout load	$Pths = 8514.1 \cdot lbf$

Length_check = "Bolt length is sufficient"

Summary of Margins for bolt:

Joint separation	$MS_1 = 0.616$	Direct Thread shear Ultimate	$MS_6 = 15.15$
Direct Tension Ultimate	$MS_2 = 4.67$	Total Thread shear Ultimate	$MS_7 = 3.08$
Direct Tension Yield	$MS_3 = 4.41$	Shear Ultimate	$MS_8 = 10$
Total Tension Ultimate	$MS_4 = 0.431$	Bending Ultimate	$MS_9 = 10$
Total Tension Yield	$MS_5 = 0.076$	Combined shear, tension and bending ultimate	$MS_{10} = 0.431$

Determination of the smallest margin of safety for the bolt, and the failure mode:

$$MSbolt := \min(MS)$$

$MSbolt = 0.076$ Failure_Mode = "Total Tension Yield"

Fail-safe Analysis

Total Number of bolts for fail-safe $n_fs := 7$

Applied tensile load $P_FS := \frac{Pf}{n_fs}$

Fail-safe Loads

Applied tensile load $P_FS = 374.302 \cdot lbf$

Applied shear load $V_FS := 0 \cdot lbf$

Applied bending moment $M_FS := 0 \cdot in \cdot lbf$

Fail-safe Factors of Safety

Ultimate $SFu_FS := 1.0$

Joint Separation $SFsep_FS := 1.0$

This file uses the calculations shown in \\escfil02\2i11_mathcad\8307_bolts\bolt_stiffness_tap_FS_RevC

Mon Feb 14 12:25:23 2005

Bolt Fail-safe Load data

Joint separation load $Psep_FS = 374.302 \cdot lbf$

Max. load on the bolt(ultimate) $Pb_FS = 2082.2 \cdot lbf$

Summary of fail-safe Margins for bolt:

Joint separation	$MS_FS_1 = 0.697$	Total Thread shear Ultimate	$MS_FS_5 = 3.09$
Direct Tension Ultimate	$MS_FS_2 = 5.94$	Shear Ultimate	$MS_FS_6 = 10$
Total Tension Ultimate	$MS_FS_3 = 0.435$	Bending Ultimate	$MS_FS_7 = 10$
Direct Thread shear Ultimate	$MS_FS_4 = 18.78$	Combined shear, tension and bending ultimate	$MS_FS_8 = 0.435$

Determination of the smallest fail-safe margin of safety for the bolt, and the failure mode:

$MSbolt_FS := \min(MS_FS)$

$MSbolt_FS = 0.435$ Failure_Mode_FS = "Combined Shear Tension Bending Ultimate"

Free Body Diagram and Hand Calculations for Keel Retainer to Keel Block Interface:

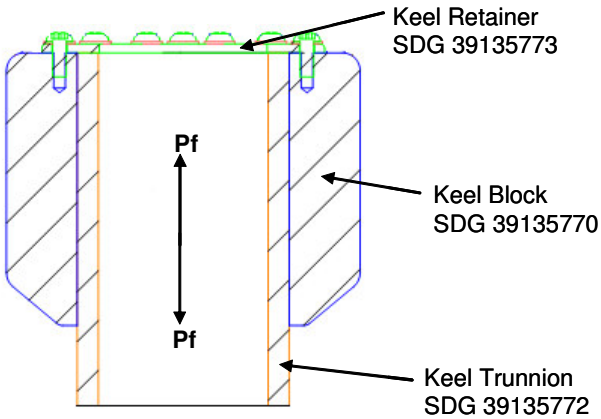

Cross Sectional View of USS-02 Keel Assembly - SDG39135768

Geometry:
(Ref. SDG39135773 and SDG39135770)

Inner Diameter of Trunnion Block	$IDbl := 3.001 \cdot in$
Outer Diameter of Trunnion Retainer	$ODtr := 4.00 \cdot in$
Diameter of Retainer to Block Bolt Pattern	$ODbbp := 3.50 \cdot in$
Diameter of Retainer to Trunnion Bolt Pattern	$ODtbp := 2.698 \cdot in$

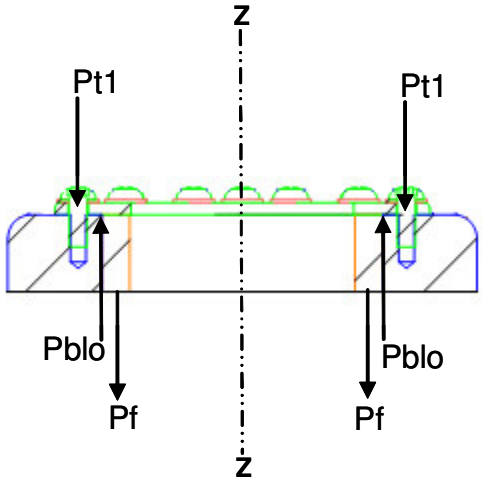

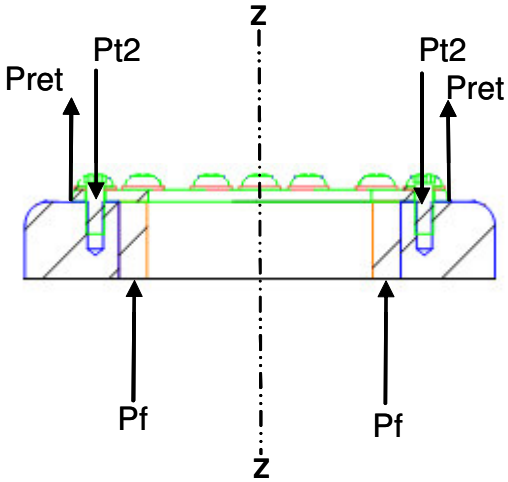

Summation of Moments with a Downward Motion of Trunnion

$$Pt1 := \frac{Pf \cdot \frac{IDbl - ODtbp}{2}}{\frac{ODbbp - IDbl}{2}} \qquad Pt1 = 1591 \cdot lbf$$

$$P2 := \frac{Pt1}{nb} \qquad P2 = 199 \cdot lbf$$

Summation of Moments with an Upward Motion of Trunnion

$$Pt2 := \frac{Pf \cdot \frac{ODtr - ODtbp}{2}}{\frac{ODtr - ODbbp}{2}} \qquad Pt2 = 6823 \cdot lbf$$

$$P3 := \frac{Pt2}{nb} \qquad P3 = 853 \cdot lbf$$

Finite Element Anlysis for Keel Retainer to Keel Block Interface:

A finite element analysis was performed on the keel retainer plate in order to extract loads for the bolts at the keel retainer to keel block interface. One load case was performed for the keel trunnion;s upward motion. See free body diagram above. MSC/NASTRAN v.2005 was used as a solver for analyzing the keel plate. The keel retainer plate is machined from CRES 15-5PH H1025.

Description of Model

A FEM model was built for the keel retainer plate using FEMAP.

1. The plate was modeled as CQUAD4 elements.
2. Z-direction constraints were added to the outside diameter of the plate to represent the outer contact between the plate and the keel block. See ODtr variable above.
3. X, Y, and Z direction constraints were added to the bolt locations for the keel retainer to keel block. Constraints lay on the diameter of the bolt circle for keel retainer to keel plate.
   See ODbbp variable from above.
4. A force of 328 lbf was applied at 8 bolt locations (grid IDs 1 thru 8) for the keel retainer to keel trunnion interface. These loads simulate the upward motion of the trunnion. Grid IDs 1 thru 8 are also constrained in the X and Y direction. See Pf and ODtbp variable from above.

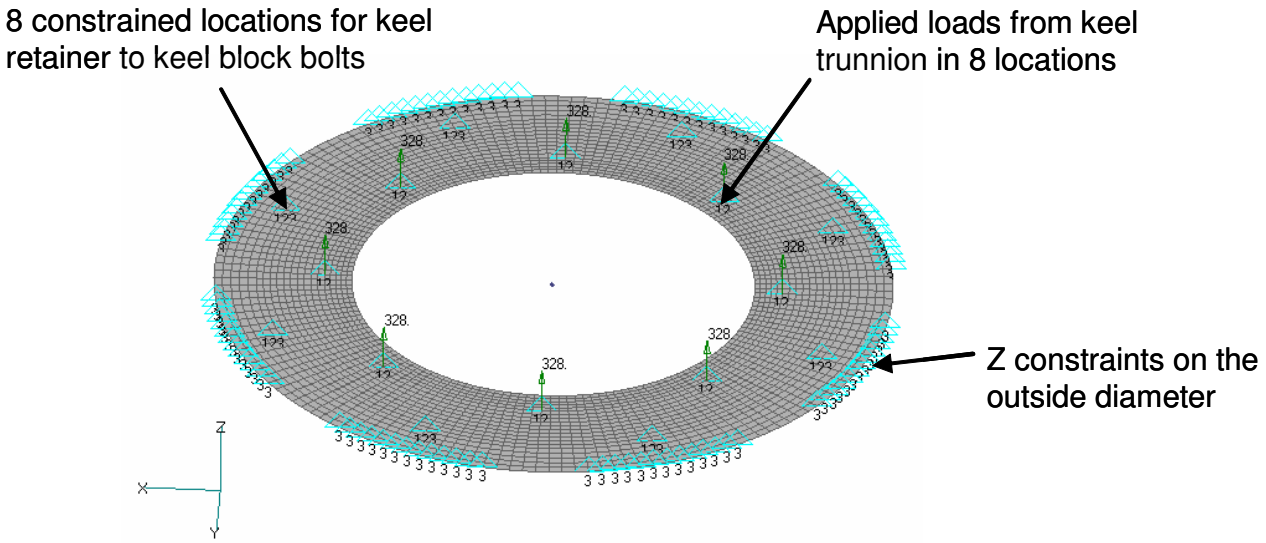

Model Checks

Rigid body checks were performed using MSC/NASTRAN. The KGG, KNN and KFF matrices all pass with low strain energies. Reference file, keelretainerck06.f06 , for additional information.

```
*** USER INFORMATION MESSAGE 7570 (GPWG1D)
     RESULTS OF RIGID BODY CHECKS OF MATRIX KGG      (G-SET)  FOLLOW:
     PRINT RESULTS IN ALL SIX DIRECTIONS AGAINST THE LIMIT OF
1.000000E-02
           DIRECTION        STRAIN ENERGY        PASS/FAIL
           ---------        -------------        ---------
             1               1.584249E-08          PASS
             2               2.793968E-09          PASS
             3               6.693881E-09          PASS
             4               2.263432E-08          PASS
             5               1.801301E-08          PASS
             6               1.189150E-07          PASS
```

```
*** USER INFORMATION MESSAGE 7570 (GPWG1D)
     RESULTS OF RIGID BODY CHECKS OF MATRIX KNN      (N-SET)  FOLLOW:
     PRINT RESULTS IN ALL SIX DIRECTIONS AGAINST THE LIMIT OF
1.000000E-02
           DIRECTION        STRAIN ENERGY        PASS/FAIL
           ---------        -------------        ---------
             1               1.584249E-08          PASS
             2               2.793968E-09          PASS
             3               6.693881E-09          PASS
             4               2.263432E-08          PASS
             5               1.801301E-08          PASS
             6               1.189150E-07          PASS
```

```
*** USER INFORMATION MESSAGE 7570 (GPWG1D)
     RESULTS OF RIGID BODY CHECKS OF MATRIX KFF      (F-SET)  FOLLOW:
     PRINT RESULTS IN ALL SIX DIRECTIONS AGAINST THE LIMIT OF
1.000000E-02
           DIRECTION        STRAIN ENERGY        PASS/FAIL
           ---------        -------------        ---------
             1               1.584249E-08          PASS
             2               2.793968E-09          PASS
             3               6.693881E-09          PASS
             4               2.263432E-08          PASS
             5               1.801301E-08          PASS
             6               1.189150E-07          PASS
```

REAL EIGENVALUES						
MODE NO.	**EXTRACTION ORDER**	**EIGENVALUE**	**RADIANS**	**CYCLES**	**GENERALIZED MASS**	**GENERALIZED STIFFNESS**
1	1	-6.43E-05	8.02E-03	1.28E-03	1.00E+00	-6.43E-05
2	2	-5.96E-05	7.72E-03	1.23E-03	1.00E+00	-5.96E-05
3	3	-3.83E-05	6.19E-03	9.85E-04	1.00E+00	-3.83E-05
4	4	2.75E-05	5.24E-03	8.34E-04	1.00E+00	2.75E-05
5	5	5.73E-05	7.57E-03	1.21E-03	1.00E+00	5.73E-05
6	6	1.44E-04	1.20E-02	1.91E-03	1.00E+00	1.44E-04
7	7	5.30E+07	7.28E+03	1.16E+03	1.00E+00	5.30E+07
8	8	5.30E+07	7.28E+03	1.16E+03	1.00E+00	5.30E+07
9	9	3.83E+08	1.96E+04	3.11E+03	1.00E+00	3.83E+08
0	10	3.93E+08	1.98E+04	3.16E+03	1.00E+00	3.93E+08

Loads from FEA:

SPC Force Resultant is `2624.0 lbf`

Forces at the 8 single point constraints are -818.65 lbf

Total Axial load from FEM in z-direction: $Pt2 := 6549.2 \cdot lbf$

Number of Bolts: $nb := 8$

Applied tensile load on each bolt from FEM: $P := \frac{Pt2}{nb}$ $\qquad P = 818.65 \cdot lbf$

Prepared By	Name	Date	Engineering and Science Contract Group	File Name
	Brent Dyer	11/10/05		Keel_Trunnion_r3.mcd
Checked By	C. Bala		*Structural Analysis Section*	Drawing No. SEG39135768
Title	Bolts from Keel Retainer to Keel Trunnion and Keel Block			

CHECK BOLTS: Keel Retainer to Keel Block (SDG39135892-817 - HTH1978-3-3 Material-A-286 CRES), Insert MS124775, Washer NAS1587A3C

Flange 1:Keel Retainer
Part number: SDG39135773
Material: CRES 15-5PH H1025

Flange 2:Keel Block
Part number SDG39135770
Material: Al 7050-T7451

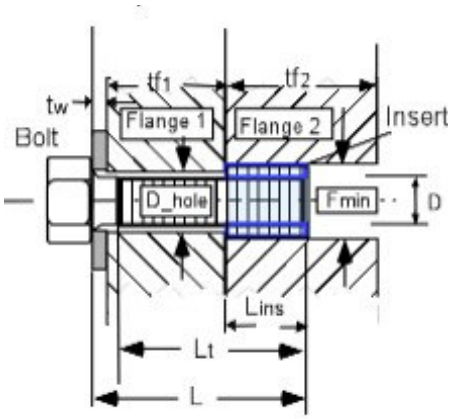

Loads - 4051 Nominal Landing Case

Applied tensile load $P = 818.65 \cdot lbf$

Applied shear load $V := 0 \cdot lbf$

Applied bending moment $M := 0 \cdot in \cdot lbf$

Factors of Safety

Ultimate $SFu := 1.4$ Yield $SFy := 1.1$

Joint Separation $SFsep := 1.2$ Fitting factor $FF := 1.15$

Temperature Data (Ref Appendix C2), Nominal Landing Case

Assembly $Temp_initial := 70 \cdot deg$

Maximum $Temp_max := 181 \cdot deg$

Minimum $Temp_min := -56 \cdot deg$

Bolt and Insert Data

Nominal diameter of bolt $D := 0.190 \cdot in$

Total length of bolt $L := .5955 \cdot in$

Threaded length $Lt := .408 \cdot in$

(If bolt is fully threaded, input Lt = L)

Number of threads/inch $Nt := 32 \cdot \frac{1}{in}$

Length of insert (Based on 2.5 Diameter) $Lins := 0.475 \cdot in$

Min. external diameter of insert $Fmin := 0.236 \cdot in$

Depth of recess for insert $lr := 0.02 \cdot in$

This file uses the calculations shown in \\escfil02\2i11_mathcad\8307_bolts\thread_data.mcd

Tue Feb 15 10:38:17 AM 2005

Prepared By	Name	Date	Engineering and Science Contract Group	File Name
	Brent Dyer	11/10/05		Keel_Trunnion_r3.mcd
Checked By	C. Bala		*Structural Analysis Section*	Drawing No. SEG39135768
Title	Bolts from Keel Retainer to Keel Trunnion and Keel Block			

Washer Data

Thickness of washers $tw := .062 \cdot in$

Outer Diameter of washer $Dw := 0.469in$

Inner Diameter of washer $Dwi := 0.192 \cdot in$

Bolt head dia. across flats $dw := .345 \cdot in$

Flange data

Thickness of flange 1 (Ref. SDG39135773) $tf1 := 0.125 \cdot in$

Thickness of flange 2 (Ref. SDG39135770) $tf2 := .475in$ (Insert length)

Diameter of hole $D_hole := .213 \cdot in$

Note: If there is no washer, tw, Dw and Dwi should be zero.
(used only if there is no washer)

Material Property Data

Bolt

Temperature correction factor for bolt strength ultimate $TSu_bolt := .97$ yield $TSy_bolt := .97$

Bolt ultimate tensile allowable stress $Ftu_bolt := 200000 \cdot psi$

Bolt ultimate shear allowable stress $Fsu_bolt := 0.6 \cdot Ftu_bolt$

Bolt yield tensile allowable $Fty_bolt := 180000 \cdot psi$

Temperature correction factor for bolt modulus $TE_bolt := .97$

Modulus of elasticity of bolt $E_bolt := \left(29.1 \cdot 10^{6} \cdot psi\right)$

Thermal coeffecient for bolt: $\beta_bolt_hot := 9.1 \cdot 10^{-6} \cdot \frac{\frac{in}{in}}{deg}$ $\beta_bolt_cold := 8.6 \cdot 10^{-6} \cdot \frac{\frac{in}{in}}{deg}$

Insert

Temperature correction factor for insert strength $TS_ins := .97$

Ultimate tensile allowable stress $Ftu_ins := 150000 \cdot psi$

Ultimate shear allowable stress $Fsu_ins := 0.6 \cdot Ftu_ins$

Washer

Temperature correction factor for washer modulus $TE_washer := .97$

Modulus of elasticity of washer $E_washer := \left(29.1 \cdot 10^{6} \cdot psi\right)$

Flanges

Stiffness of the joint depends upon number of members in the grip of the fasteners, Modulus of elasticity of these members, and diameters of the bolt and the washer.

Temperature correction factor for flange 1 $Tf1E := .99$ (modulus) (Ref. page 2.4.3.2-6)

Temperature correction factor for flange 2 $Tf2E := .97$ (modulus)

$Tf2s := .88$ (strength) (Ref. Fig. 3.7.3.2.1 MIL-HDBK-5H)

$Fsu_f2 := 44000 \cdot psi$

Modulus of elasticity for the parts in the joint $E_flange1 := \left(28.5 \cdot 10^{6} \cdot psi\right)$ $E_flange2 := \left(10.3 \cdot 10^{6} \cdot psi\right)$

Coefficient of thermal expansion for flanges $\beta_flange1_hot := 6.3 \cdot 10^{-6} \cdot \frac{\frac{in}{in}}{deg}$ $\beta_flange2_hot := 13.0 \cdot 10^{-6} \cdot \frac{\frac{in}{in}}{deg}$

$\beta_flange1_cold := 5.9 \cdot 10^{-6} \cdot \frac{\frac{in}{in}}{deg}$ $\beta_flange2_cold := 12.1 \cdot 10^{-6} \cdot \frac{\frac{in}{in}}{deg}$

Torque/Preload data

Maximum torque (60% of Yield) $Tmax := 61.5 \cdot in \cdot lbf$ Loading plane factor: $n := .5$

Minimum torque (95% of max. torque) $Tmin := 58.5 \cdot in \cdot lbf$ Preload Uncertainty: $u := 0.25$

Torque coefficient: $k := 0.15$

This file uses the calculations shown in \\escfil02\2i11_mathcad\8307_bolts\bolt_stiffness_insert_RevC

Mon Feb 06 3:57:46 PM 2006

Bolt Load data

Bolt/joint stiffness factor	$= 0.178$	Preload due to temperature	$Pthr_pos = 180.6 \cdot lbf$
Max. preload	$PLDmax = 2878 \cdot lbf$		$Pthr_neg = -180.2 \cdot lbf$
Min. preload	$PLDmin = 1224.4 \cdot lbf$	Uncertainty factor	$u = 0.25$
Joint separation load	$Psep = 982.38 \cdot lbf$	Torque coefficient	$k = 0.15$
Max. load on the bolt(ultimate)	$Pb = 2995.5 \cdot lbf$	Loading plane factor	$n = 0.5$
Max. load on the bolt(yield)	$Pby = 2970.3 \cdot lbf$	Thread shear pullout load of bolt or insert	$Pths = 9040.8 \cdot lbf$
Bolt ultimate tensile strength	$PAt = 3734.3 \cdot lbf$	Thread shear pullout load in parent metal	$Ppths = 6818.1 \cdot lbf$

Length_check = "Bolt length is sufficient"

(Note: Insert length is based on 2.5 times the nominal bolt diameter. Bolt length is sufficent.)

Summary of Margins for bolt:

Joint separation	$MS_1 = 0.190$	Direct Thread shear Ultimate	$MS_6 = 4.17$
Direct Tension Ultimate	$MS_2 = 1.83$	Total Thread shear Ultimate	$MS_7 = 1.28$
Direct Tension Yield	$MS_3 = 2.25$	Shear Ultimate	$MS_8 = 10$
Total Tension Ultimate	$MS_4 = 0.25$	Bending Ultimate	$MS_9 = 10$
Total Tension Yield	$MS_5 = 0.131$	Combined shear, tension and bending ultimate	$MS_{10} = 0.247$

Determination of the smallest margin of safety for the bolt, and the failure mode:

$$MSbolt := \min(MS)$$

$MSbolt = 0.131$ Failure_Mode = "Total Tension Yield"

Fail-safe Analysis

Total Number of bolts for fail-safe $n_fs := 7$

Applied tensile load $P_FS := \frac{Pt2}{n_fs}$

Fail-safe Loads

Applied tensile load $P_FS = 935.6 \cdot lbf$

Applied shear load $V_FS := 0 \cdot lbf$

Applied bending moment $M_FS := 0 \cdot in \cdot lbf$

Fail-safe Factors of Safety

Ultimate $SFu_FS := 1.0$

Joint Separation $SFsep_FS := 1.0$

This file uses the calculations shown in \\escfil02\2i11_mathcad\8307_bolts\bolt_stiffness_insert_FS_RevC

Mon Feb 14 12:51:39 2005

Bolt Fail-safe Load data

Joint separation load $Psep_FS = 935.6 \cdot lbf$

Max. load on the bolt(ultimate) $Pb_FS = 2973.9 \cdot lbf$

Summary of fail-safe Margins for bolt:

Joint separation	$MS_FS_1 = 0.249$	Total Thread shear Ultimate	$MS_FS_5 = 1.29$
Direct Tension Ultimate	$MS_FS_2 = 2.47$	Shear Ultimate	$MS_FS_6 = 10$
Total Tension Ultimate	$MS_FS_3 = 0.256$	Bending Ultimate	$MS_FS_7 = 10$
Direct Thread shear Ultimate	$MS_FS_4 = 5.34$	Combined shear, tension and bending ultimate	$MS_FS_8 = 0.256$

Determination of the smallest fail-safe margin of safety for the bolt, and the failure mode:

$MSbolt_FS := \min(MS_FS)$

$MSbolt_FS = 0.249$ Failure_Mode_FS = "Joint Separation"

2.5 USS-02 Rivet Strength Assessment

2.5.1 Upper USS-02 Riveted Joints

Upper USS-02 Riveted Joints

The Upper USS-02 Rivet Analysis is performed in the following report sections.

2.5.1.1	Upper Vacuum Case Joint to Upper Trunnion Bridge
2.5.1.2	Lower Trunnion Bridge Beam Elbow to Sill Joint
2.5.1.3	Sill Bracket to Sill Tube
2.5.1.4	Diagonal Sill Bracket to Sill Tube
2.5.1.5	Diagonal Strut Tube to Diagonal Strut End Fitting
2.5.1.6	Upper Trunnion Bridge Beam to Sill Joint
2.5.1.7	Lower Trunnion Bridge Beam to Lower Trunnion Bridge Beam Elbow
2.5.1.8	Lower Trunnion Bridge Beam to Lower Vacuum Case Joint

2.5.1.1 Upper Vacuum Case Joint to Upper Trunnion Bridge

Upper Vacuum Case Joint to Upper Trunnion Bridge Beam Rivet Analysis

The Upper Vacuum Case Joint SDG39135727 connects to the Upper Trunnion Bridge Beam SDG39135728 in 4 locations. The upper vacuum case is fastened to the upper bridge beam, with NAS1398M8, 0.25 in rivets. The upper vacuum case is machined from 7050-T7451 plate and the upper trunnion bridge beam is extruded from 7075-T73511. CBEAM elements 1121, 1122, 1123, and 1124 in the loads model represents the portion of the vacuum case joint that interfaces with the bridge beam.

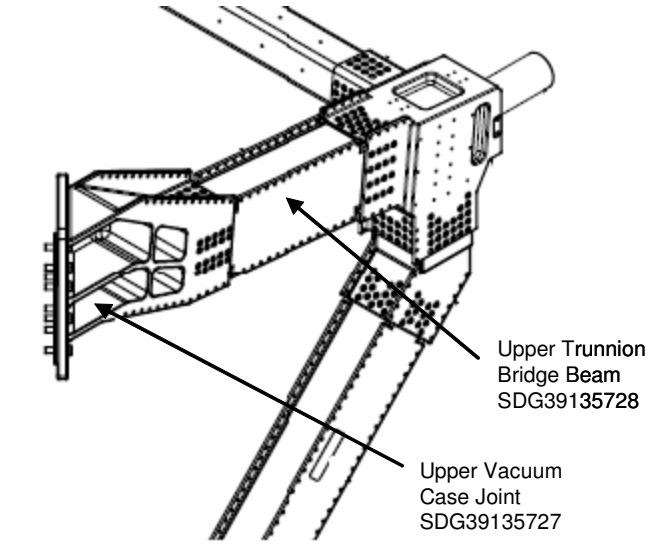

Material Strength for Rivets:

Rivets are NAS1398 type M, 0.25 in. blind protruding head Monel rivets

(Ref. NAS1400, sheet 5)

Max. rivet shear strength $Fs := 2840 \cdot lbf$

Material Strength for Upper Trunnion Bridge Beam:

Tube material is extruded 7075-T73511 with e/D=2.0

(Ref. MIL-HDBK-5J, Table 3.7.6.0(g2))

Allowable bearing strength $Fbru := 119000 \cdot psi$

Allowable shear strength $Fsu := 35000 \cdot psi$

Factors of safety:

Ultimate Factor of Safety: $FSu := 1.4$

Fitting Factor: $FF := 1.15$

Temperature:

Maximum Temperature $Tmax := 150 \cdot deg$

(Ref. Appendix C2, AMS-02 Temperature Table)

Temperature Correction Factor (For Fs) $cf := .98$

(Ref. Appendix C5)

Temperature Correction Factor (For Fsu) $cd := .99$

(Ref. MIL-HDBK-5J, Figure 3.7.6.1.2(b))

Temperature Correction Factor (For Fbru) $cb := .92$

(Ref. MIL-HDBK-5J, Figure 3.7.6.1(a))

Loads model 2-06 was run in NASTRAN for 192 load cases. Beam element forces were recovered, and given in the data file "upperVCJtoUTBB.dat" for elements 1121, 1122, 1123, and 1124.

Beam Section Properties:

Thickness of tube $t := 0.25 \cdot in$ (Ref. SDG39135728)

Width of tube $ap := 5.062 \cdot in$ (Ref. SDG39135728)

Depth of tube $bp := 6.312 \cdot in$ (Ref. SDG39135728)

Enclosed area of mean width and mean height $Am := (ap - t) \cdot (bp - t)$ $Am = 29.17 \cdot in^2$

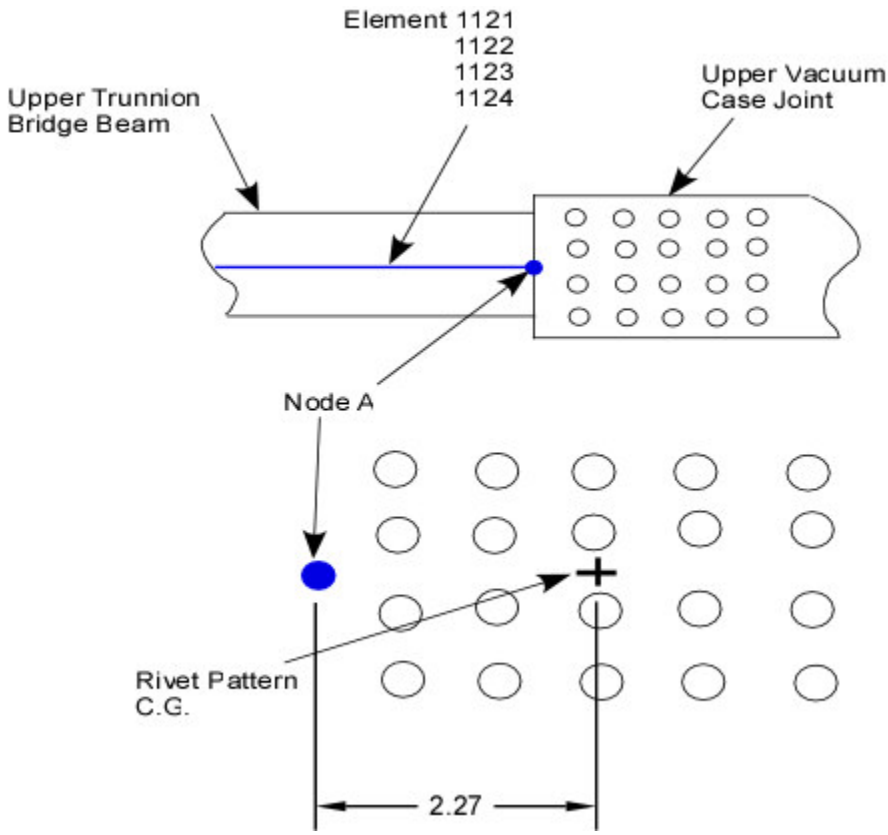

Figure 2.5.1.1-1 Rivet Pattern Dimensions for Beam Element End A.
Note: Figure is for reference only.

Note: The A and B ends of the beam elements that lay inside of the socket of the Vacuum Case Joint are tied to RBE elements that are "spidered" out to shell elements. This modeling technique stiffens the beam element inside of the socket allowing for lower loads at ends A and B. Therefore, loads are taken from end A of elements 1121, 1122, 1123, and 1124. A moment extrapolation from End A is performed to locate the moments at the center of the rivet pattern.

Reading in Data File:

data := READPRN("upperVCJtoUTBB.dat") ORIGIN := 1 i := 1 .. rows(data)

Loads at End A of the Rivet Pattern:

Axial Load: $Fxa_i := data_{i,7} \cdot lbf$

Shear in Y axis: $Fya_i := data_{i,5} \cdot lbf$

Shear in Z axis: $Fza_i := data_{i,6} \cdot lbf$

Torsion: $Mxa_i := data_{i,8} \cdot in \cdot lbf$

Moment about Y axis: $Mya_i := -data_{i,4} \cdot in \cdot lbf$

Moment about Z axis: $Mza_i := data_{i,3} \cdot in \cdot lbf$

Element Identification: $ID_i := data_{i,1}$

Load Case Number: $LC_i := data_{i,2}$

Extrapolation of Moments:

A moment extrapolation from End A is performed to locate moments at the center of the rivet pattern.

Distance from beam end A to the center of the rivet pattern: $dist := 2.27 \cdot in$ (Ref. Figure 2.5.1.1-1 and Appendix C4)

Extrapolation of My Moment: $My_i := Mya_i + Fza_i \cdot dist$

Extrapolation of Mz Moment: $Mz_i := Mza_i + Fya_i \cdot dist$

Load in Rivets at Upper Bridge Beam to Vacuum Case Joint:

Total Number of rivets in beam end:

$Nsps := 80$

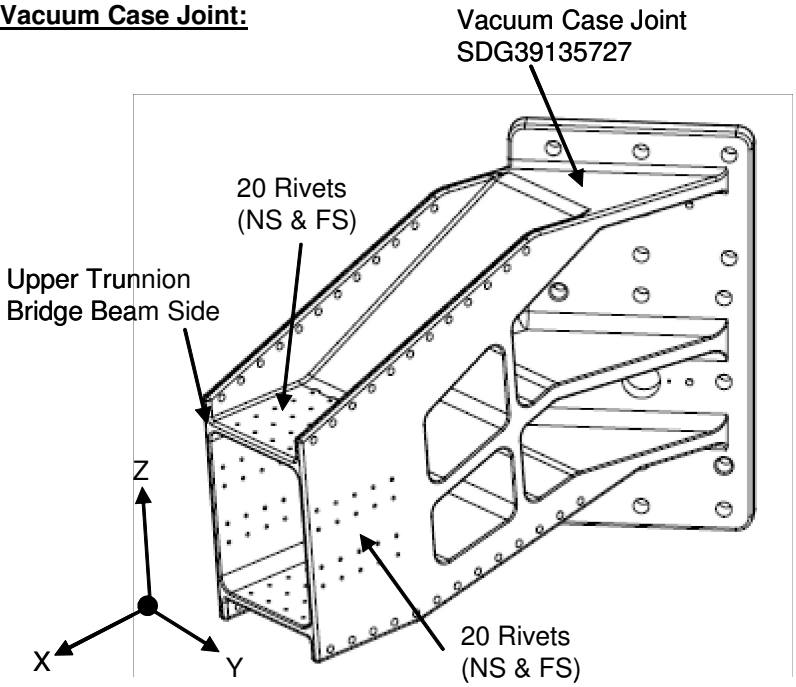

Number of rivets reacting Fz shear load:

$psz := 40$

Number of rivets reacting Fy shear loads:

$psy := 40$

Shear load/rivet due to Fy $\quad Fsry := \frac{Fya}{psy} \quad \max(Fsry) = 45.9 \cdot lbf$

Shear load/rivet due to Fz $\quad Fsrz := \frac{Fza}{psz} \quad \max(Fsrz) = 63.6 \cdot lbf$

Shear flow due to torsion
(Ref. Bruhn section A6.8) $\quad Fsrt := \frac{Mxa}{2 \cdot Am} \quad \max(Fsrt) = 361 \cdot \frac{lbf}{in}$

Note: The shear load (Fsrt) is used to calculate the torsional load (Psrt) in the rivet due to the pitch on the rivet pattern. See Figure 2.5.1.1-2.

Prepared By	B. Dyer	04/26/06	Engineering and Science Contract Group *Structural Analysis Section*	File Name upperVCJtoUTBB.mcd
Revised By	G. Reyes	06/23/09		
Checked By	C. Bala			Draw ing No. SEG39135726
Title	Upper Vacuum Case Joint to Upper Trunnion Bridge Beam Rivet Analysis			

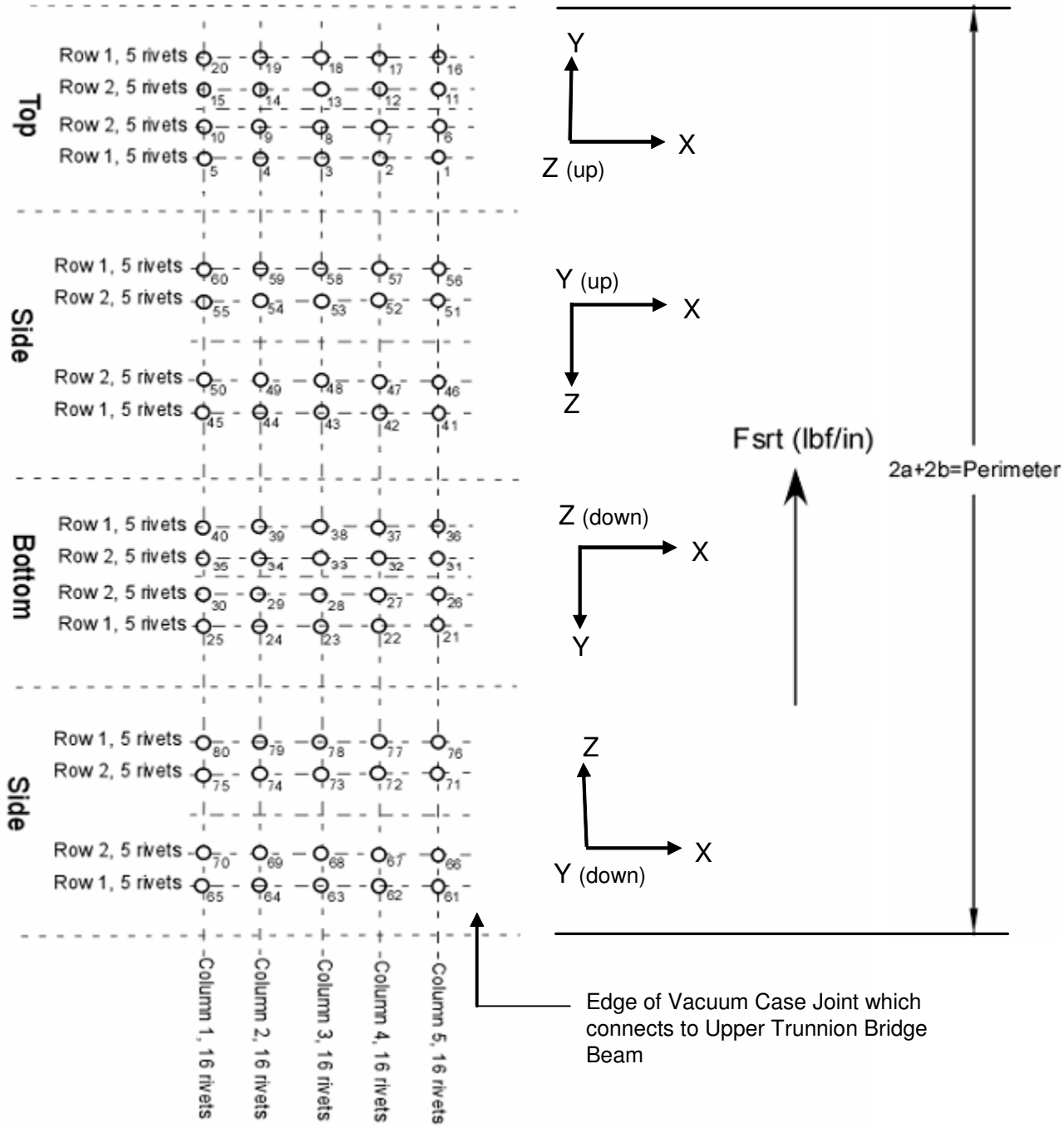

Figure 2.5.1.1-2 Layout of Rivet Patterns used to Calculate Rivet Pitch for Torsional Load

Calculation of Rivet Pitch:

It is assumed that all rivets share the torsion load equally. Therefore, each column of rivets has the same maximum load per rivet due to torsion.

Perimeter of rivet pattern $per := 2 \cdot ap + 2 \cdot bp$ $per = 22.7 \cdot in$

Loads in rivet due to torsion $Psrt := Fsrt \cdot \left(\frac{per}{Nsps} \right)$ $\max(Psrt) = 102.7 \cdot lbf$

Shear load in rivets due to beam axial load $Prta := \frac{Fxa}{Nsps}$ $\max(Prta) = 443.8 \cdot lbf$

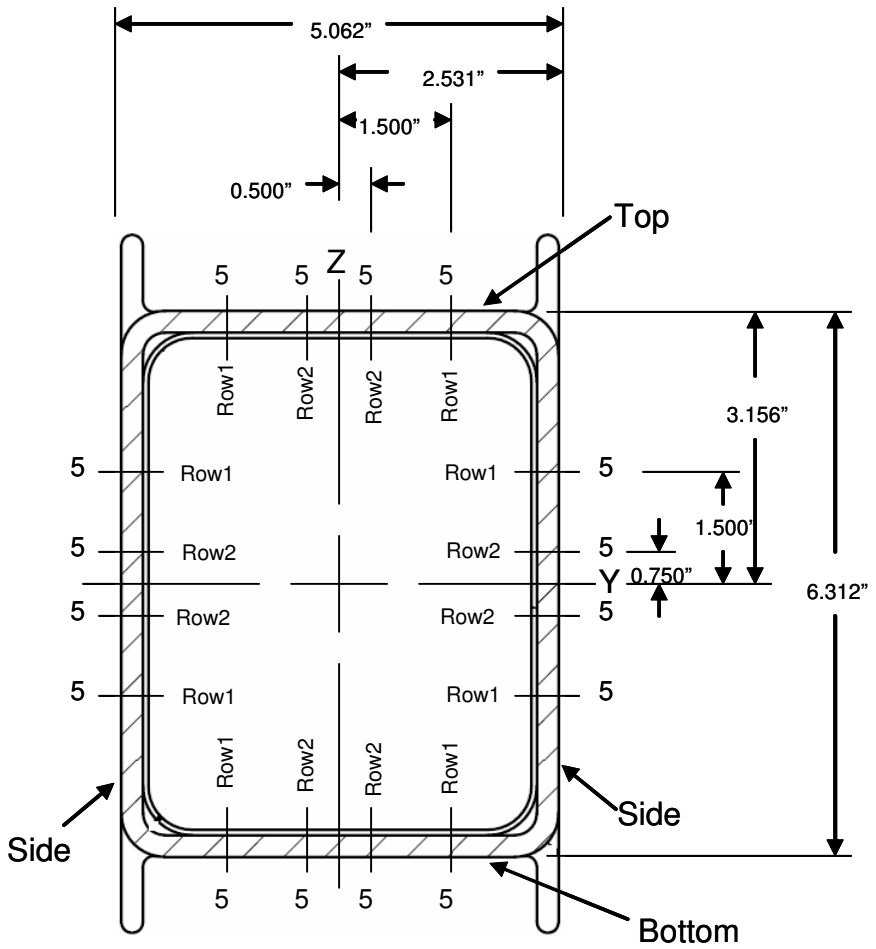

Note: Figure is for reference only.

Rivet Dimension Variables:
(Ref. SDG39135728)

$z1 := .500 \cdot in$

$z2 := 1.500 \cdot in$

$z3 := 2.531 \cdot in$

$y1 := .750 \cdot in$

$y2 := 1.500 \cdot in$

$y3 := 3.156 \cdot in$

Eccentrically Loaded Rivets due to My and Mz Moments:

Rivet Coordinate System Data

$j := 1 .. rows(coord)$ Counter for Coordinate Points

$x_j := coord_{j,2}$ Rivet Coordinate Points for x-direction

$y_j := coord_{j,3}$ Rivet Coordinate Points for y-direction

$z_j := coord_{j,4}$ Rivet Coordinate Points for z-direction

$$rivet_counter_j := \frac{coord_{j,1}}{in}$$

Prepared By	B. Dyer	04/26/06	Engineering and Science Contract Group *Structural Analysis Section*	File Name upperVCJtoUTBB.mcd
Revised By	G. Reyes	06/23/09		
Checked By	C. Bala			Draw ing No. SEG39135726
Title	Upper Vacuum Case Joint to Upper Trunnion Bridge Beam Rivet Analysis			

For Moment My:

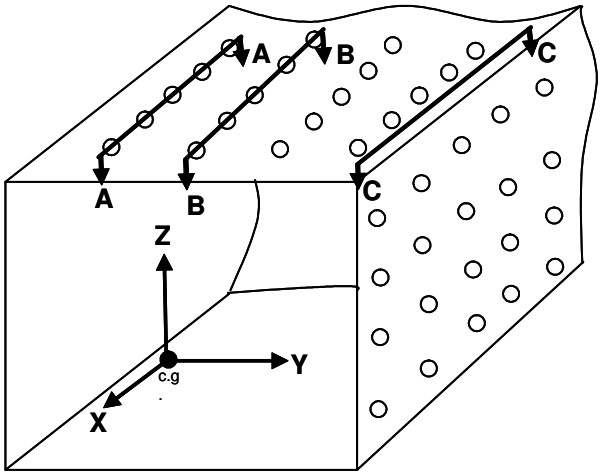

Eccentrically Loaded Rivet Pattern about My

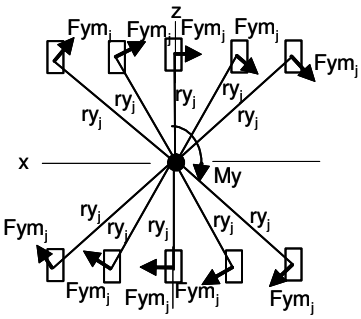

Cross-Section A-A

(Row 1, 20 rivets)

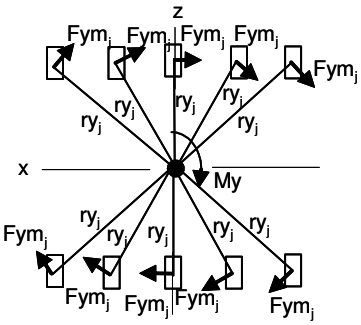

Cross-Section B-B

(Row 2, 20 rivets)

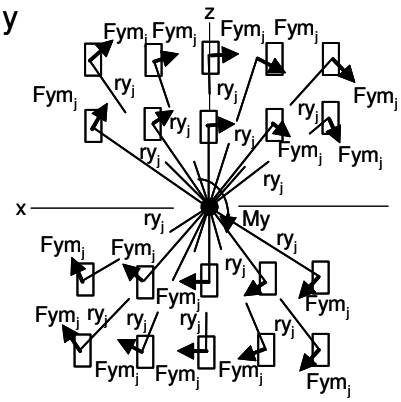

Cross-Section C-C

(Represents both sides, 40 rivets)

Note: Figure is for reference only.

$$ry_j := \left[\left(x_j\right)^2 + \left(z_j\right)^2\right]^{\frac{1}{2}}$$

Radial distance to each rivet from the centroid of the rivet pattern

$$sigry := \sum_{j=1}^{rows(coord)} \left(ry_j\right)^2$$

Sum of the radial directions for all rivets in the rivet pattern

$$\beta y_j := atan2\left(x_j, z_j\right)$$

Angle between resultant vector
and tension or shear vectors

(Note: The angle θ is defined off of the x-axis.
See below.)

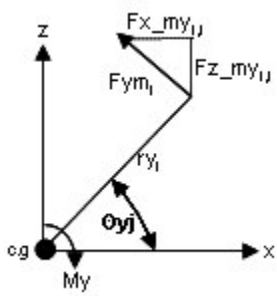

$$Fym_{i,j} := \frac{-My_i \cdot ry_j}{sigry}$$

Resultant Load at
Each Rivet

$$Fz_my_{i,j} := Fym_{i,j} \cdot \sin\left(\frac{u}{2} - \beta y_j\right)$$

z - component of Fym

$$Fx_my_{i,j} := Fym_{i,j} \cdot -\cos\left(\frac{u}{2} - \beta y_j\right)$$

x - component of Fym

Prepared By	B. Dyer	04/26/06	Engineering and Science Contract Group *Structural Analysis Section*	File Name upperVCJtoUTBB.mcd
Revised By	G. Reyes	06/23/09		
Checked By	C. Bala			Draw ing No. SEG39135726
Title	Upper Vacuum Case Joint to Upper Trunnion Bridge Beam Rivet Analysis			

For Moment Mz:

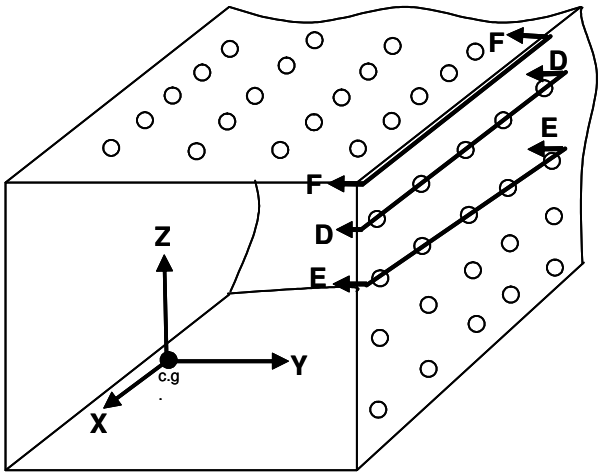

Eccentrically Loaded Rivet Pattern about Mz

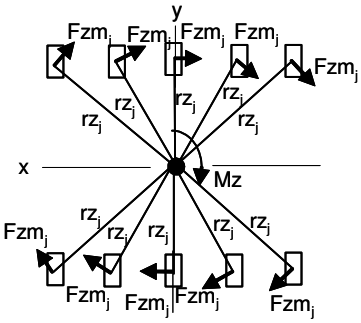

Cross-Section D-D

(Row 1, 20 rivets)

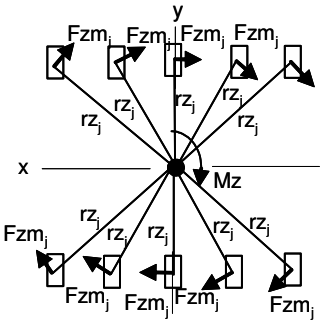

Cross-Section E-E

(Row 2, 20 rivets)

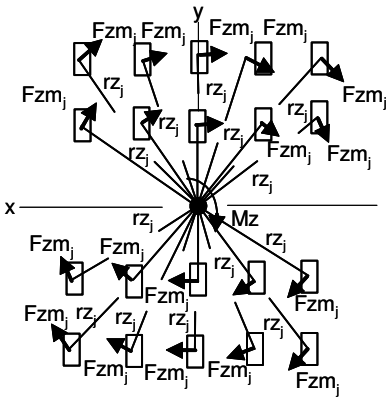

Cross-Section F-F

(Represents top and bottom, 40 rivets)

Note: Figure is for reference only.

$$rz_j := \left[\left(x_j\right)^2 + \left(y_j\right)^2\right]^{\frac{1}{2}}$$

Radial distance to each rivet from the centroid of the rivet pattern

$$sigrz := \sum_{j=1}^{rows(coord)} \left(rz_j\right)^2$$

Sum of the radial directions for all rivets in the rivet pattern

$$\beta z_j := atan2\left(x_j, y_j\right)$$

Angle between resultant vector and tension or shear vectors

$$Fzm_{i,j} := \frac{Mz_i \cdot rz_j}{sigrz}$$

Resultant Load at Each Rivet

(Note: The angle θ is defined off of the x-axis.
See below.)

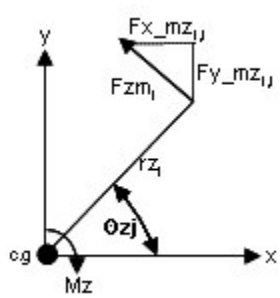

$$Fy_mz_{i,j} := Fzm_{i,j} \cdot \sin\left(\frac{u}{2} - \beta z_j\right)$$

y - component of Fzm

$$Fx_mz_{i,j} := Fzm_{i,j} \cdot -\cos\left(\frac{u}{2} - \beta z_j\right)$$

x - component of Fzm

$$F_{i,j} := \begin{cases} Fz_my_{i,j} & \text{if } rivet_counter_j \le 40 \\ Fy_mz_{i,j} & \text{otherwise} \end{cases}$$

Total Axial Load due to My and Mz Moments

$$\max\left(\overrightarrow{|F|}\right) = 449.8 \cdot lbf$$

Note: The axial loading is reacted by the beam and socket and not taken by the rivet. See section 2.1.2 for beam and socket analysis.

Total Rivet Shear Load:

$$Pt_{i,j} := \begin{cases} \sqrt{\left(Prta_i + Fx_my_{i,j} + Fx_mz_{i,j}\right)^2 + \left(Psrt_i + Fsry_i + Fy_mz_{i,j}\right)^2} & \text{if } j \le 40 \\ \sqrt{\left(Prta_i + Fx_my_{i,j} + Fx_mz_{i,j}\right)^2 + \left(Psrt_i + Fsrz_i + Fz_my_{i,j}\right)^2} & \text{otherwise} \end{cases}$$

$\max(Pt) = 1476.8 \cdot lbf$

$Pt_{575,40} = 1476.8 \cdot lbf$

Margin of safety for Total Rivet Load:

$$MS1t := \frac{Fs \cdot cf}{Pt \cdot FSu \cdot FF} - 1$$

$\min(MS1t) = 0.171$

(Note: Fitting Factor (FF) included for misalignment, different shim thicknesses, etc. ...)

The following will output an array for each row of rivets with element identity, load case, load, and margin of safety from left to right.

$output := augment(ID, LC, MS1t)$

$rows(output) = 768$ Number of rows in the "output" array

$cols(output) = 82$ Number of columns in the "output" array

The "output" array is then searched for the location of the minimum margin. The match function is used to locate the minimum margin of safety and the element identity, load case, rivet location, and maximum load are pulled from the array.

$$match(\min(MS1t), MS1t) = \left[\begin{pmatrix} 575 \\ 40 \end{pmatrix}\right]$$

$min_LC := output_{575,2}$ Load Case for Minimum Margin of Safety

$min_ID := output_{575,1}$ Element ID for Minimum Margin of Safety

Rivet number 40 is the rivet with the minimum margins of safety of 0.171.

Minimum Margin of Safety:

Minimum Margin of Safety	$\min(MS1t) = 0.171$
Element ID for Minimum Margin of Safety	$min_ID = 1123$
Load Case for Minimum Margin of Safety	$min_LC = 4016$
Maximum Rivet Load for Minimum Margin of Safety	$\max(Pt) = 1476.8 \cdot lbf$
Rivets with Minimum Margin of Safety	Rivet number 40 (See figure 2.5.1.1 - 6 for rivet location)

Bearing on Hole Wall:

Hole diameter $dh := 0.257 \cdot in$ (Ref. SEG39135726, Flag Note 2)

Tube thickness $tp := 0.25 \cdot in$ (Ref. SDG39135728)

Bearing area $Ab := dh \cdot tp$ $Ab = 0.06425 \cdot in^2$

Max. load per rivet $max(Pt) = 1476.8 \cdot lbf$

Max. bearing stress $b := \frac{max(Pt)}{Ab}$ $b = 22985.8 \cdot psi$

Margin of safety $MSb := \frac{Fbru \cdot cb}{b \cdot FSu \cdot FF} - 1$ $MSb = 1.96$

Shear tear out:

Edge distance $e := 0.520 \cdot in$ (Ref. SDG39135727)

Note: Using this e is conservative, since actual rivet force is in general at some angle.

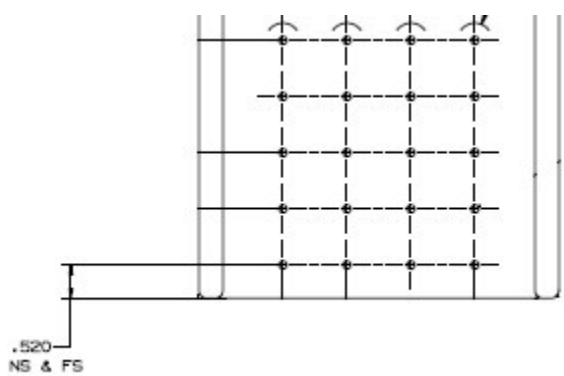

Hole diameter $dh := 0.257 \cdot in$

E over D ratio $\frac{e}{dh} = 2.023$

Tube thickness $tp := 0.25 \cdot in$

Shear out area $As := 2 \cdot \left(e - \frac{dh}{2} \cdot \cos(40 \cdot deg) \right) \cdot tp$ $As = 0.2108 \cdot in^2$

Max. load per rivet $max(Pt) = 1476.8 \cdot lbf$

Max. shear tear out stress $=s := \frac{max(Pt)}{As}$ $=s = 7006.5 \cdot psi$

Margin of safety $MSsh := \frac{Fsu \cdot cd}{=s \cdot FSu \cdot FF} - 1$ $MSsh = 2.072$

2.5.1.2 Lower Trunnion Bridge Beam Elbow to Sill Joint

Lower Trunnion Bridge Beam Elbow to Sill Joint Rivet Analysis

The elbow joint SDG39135734 connects the sill joint SDG39135730 to the lower trunnion bridge beam, SDG39135735 in 4 locations. The upper end of the elbow joint is fastened to the sill joint, with NAS1398M8, 0.25 in rivets. The elbow joint and the sill joint are machined from 7050-T7451 plate. CBEAM elements 1217, 1218, 1219, and 1220 in the loads model represent the portion of the elbow joint that interfaces with the sill joint. The rivet pattern centroid is 2.250 in from end A of the beam element. Element length is 7.164 in. See Appendix C4 for AMS Rivet Pattern Location Table.

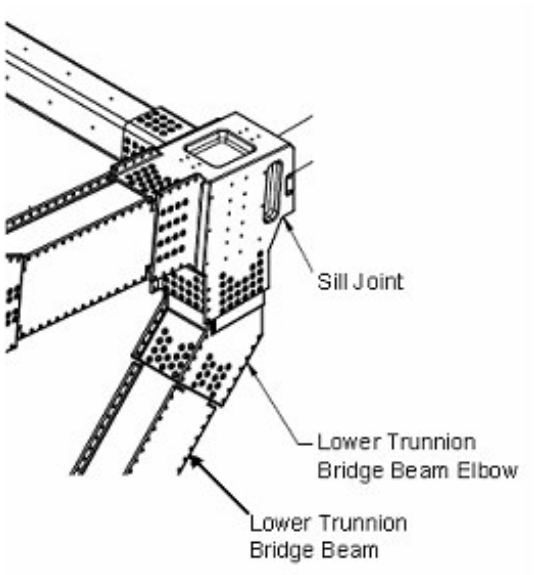

Material Strength for Rivets:

Rivets are NAS1398 type M, 0.25 in. blind protruding head Monel rivets

(Ref. NAS1400, sheet 5)

Max. rivet shear strength $Fs := 2840 \cdot lbf$

Material Strength for Lower Trunnion Bridge Beam Elbow:

Joint material is 7050-T7451 with e/D=2.0

(Ref. MIL-HDBK-5J, Table 3.7.4.0(b1))

Allowable bearing strength $Fbru := 132000 \cdot psi$

Allowable shear strength $Fsu := 44000 \cdot psi$

Factors of safety:

Ultimate Factor of Safety: $FSu := 1.4$

Fitting Factor: $FF := 1.15$

Temperature:

Maximum Temperature $Tmax := 150 \cdot deg$

(Ref. Appendix C2, AMS-02 Temperature Table)

Temperature Correction Factor (For Fs) $cf := .99$

(Ref. Appendix C5)

Temperature Correction Factor (For Fsu) $cd := .94$

(Ref. MIL-HDBK-5J, Figure 3.7.4.2.1)

Temperature Correction Factor (For Fbru) $cb := .94$

(Ref. MIL-HDBK-5J, Figure 3.7.4.2.1)

Loads model 2-06 was run in NASTRAN for 128 load cases, launch and abort landing. Beam element forces were recovered, and given in the data file "ElbowtoTSillJoint_launch_abort.dat" for elements 1217, 1218, 1219, and 1220.

$data := READPRN("ElbowtoTSillJoint_launch_abort.dat")$ $ORIGIN := 1$ $i := 1 .. rows(data)$

Loads from Beam End A:

Axial Load $Fxa_i := data_{i,7} \cdot lbf$

Shear in Y axis $Fya_i := data_{i,5} \cdot lbf$

Shear in Z axis $Fza_i := data_{i,6} \cdot lbf$

Torsion $Mxa_i := data_{i,8} \cdot in \cdot lbf$

Moment about Y axis $Mya_i := -data_{i,4} \cdot in \cdot lbf$

Moment about Z axis $Mza_i := data_{i,3} \cdot in \cdot lbf$

$ID_i := data_{i,1}$ $LC_i := data_{i,2}$

Loads from Beam End B:

Axial Load $Fxb_i := data_{i,13} \cdot lbf$

Shear in Y axis $Fyb_i := data_{i,11} \cdot lbf$

Shear in Z axis $Fzb_i := data_{i,12} \cdot lbf$

Torsion $Mxb_i := data_{i,14} \cdot in \cdot lbf$

Moment about Y axis $Myb_i := -data_{i,10} \cdot in \cdot lbf$

Moment about Z axis $Mzb_i := data_{i,9} \cdot in \cdot lbf$

Beam Section Properties:

Thickness of tube $t := 0.25 \cdot in$ (Ref. SDG39135734)

Width of tube $a := 5.938 \cdot in$ (Ref. SDG39135734)

Depth of tube $b := 5.938 \cdot in$ (Ref. SDG39135734)

Enclosed area of mean width and mean height $Am := (a - t) \cdot (b - t)$ $Am = 32.35 \cdot in^2$

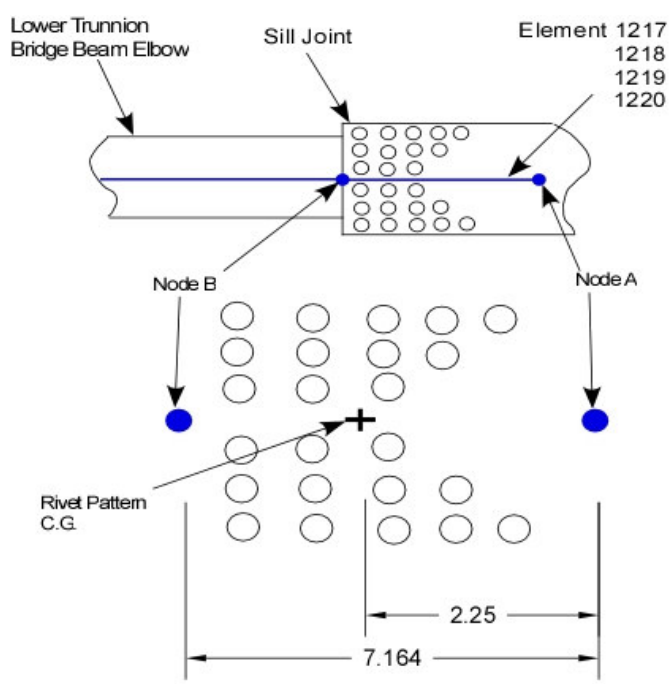

Figure 2.5.1.2-1 Rivet Pattern Dimensions for Beam Element Ends A and B.

Note: Figure is for reference only.

Bending Moment Interpolation:

NASTRAN gives beam moments at ends A and B of the beam element. The center of gravity of the rivet pattern falls between nodes A and B, therefore, the moment at the center of the rivet pattern needs to be interpolated.

Distance from end A to the center of the rivet pattern $c := 2.250 \cdot in$

Total length of beam element $d := 7.164 \cdot in$

(See Figure 2.5.1.2-1 and Ref. Appendix C4)

Moment My:

Difference $Mydiff_i := \left(Mya_i - Myb_i\right)$

Lineraly interpolate at centroid of rivets

$$My1 := \frac{c}{d} \cdot Mydiff \qquad My2 := \frac{d - c}{d} \cdot Mydiff$$

Moment My interpolated at centriod of rivets

$$My := Myb + My2$$

Moment Mz:

Difference $Mzdiff_i := \left(Mza_i - Mzb_i\right)$

Lineraly interpolate at centroid of rivets

$$Mz1 := \frac{c}{d} \cdot Mzdiff \qquad Mz2 := \frac{d - c}{d} \cdot Mzdiff$$

Moment Mz interpolated at centriod of rivets

$$Mz := Mzb + Mz2$$

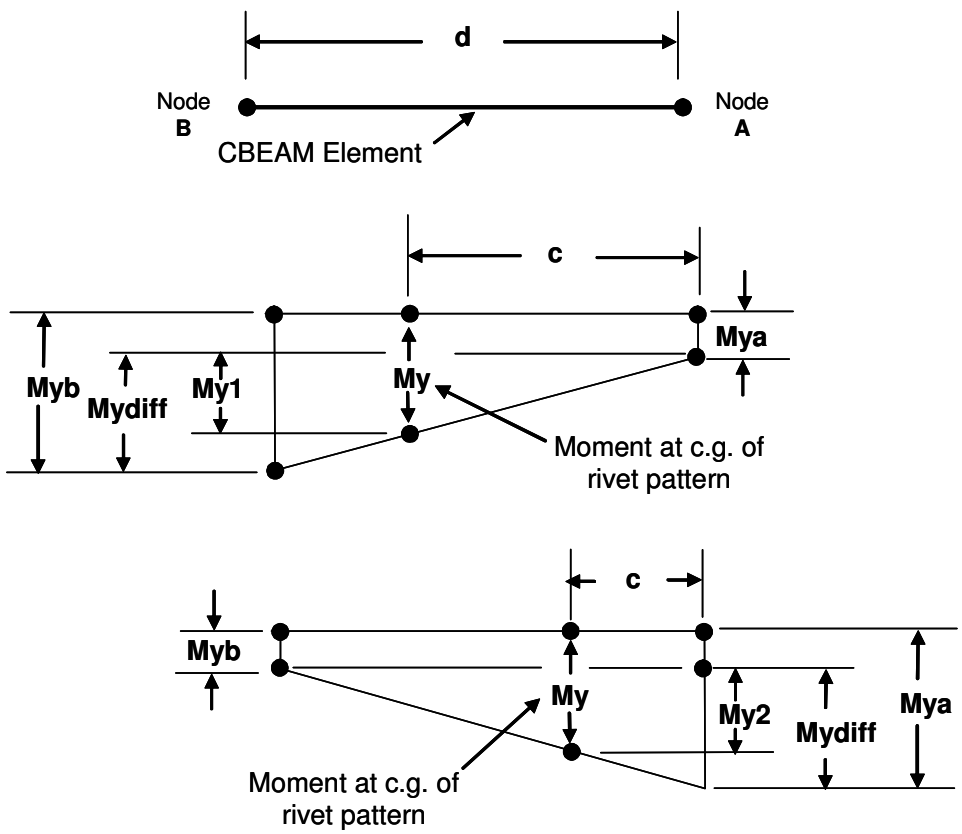

Free Body Diagram for Moment Distribution for My Interpolation
(Note: Simular moment distribution is used for Mz interpolation.)

Beam and Socket

Assume Beam and Socket takes 5% of the entire load. Therefore moments My and Mz have been reduced to 95%.

Moment My $My := My \cdot .95$

Moment Mz $Mz := Mz \cdot .95$

Load in Rivets at Lower Bridge Beam to Elbow Joint:

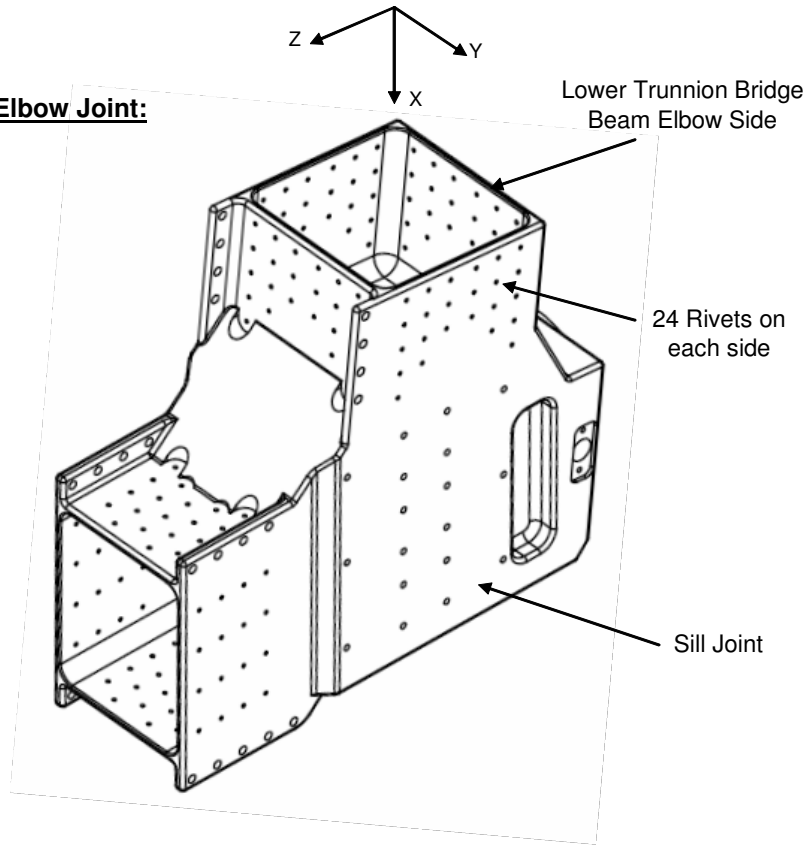

Total Number of rivets in beam end:

$Nsps := 96$

Number of rivets reacting Fz shear load:

$psz := 48$

Number of rivets reacting Fy shear loads:

$psy := 48$

Shear load/rivet due to Fy $Fsry := \frac{Fya}{psy}$ $\max(Fsry) = 34.9 \cdot lbf$

Shear load/rivet due to Fz $Fsrz := \frac{Fza}{psz}$ $\max(Fsrz) = 698.2 \cdot lbf$

Note: The Fya and Fza forces have the same magnitude as the Fyb and Fzb forces. The end A forces are used above.

Shear flow due to torsion (Ref. Bruhn section A6.8) $Fsrt := \frac{Mxa}{2 \cdot Am}$ $\max(Fsrt) = 234.2 \cdot \frac{lbf}{in}$

Note: The shear load (Fsrt) is used to calculate the torsional load (Psrt) in the rivet due to the pitch on the rivet pattern. See Figure 2.5.1.2-2.

Prepared By	B. Dyer	04/14/05	Engineering and Science Contract Group *Structural Analysis Section*	File Name ElbowtoSilljnt.mcd
Revised By	G. Reyes	06/23/09		
Checked By	C. Bala			Draw ing No. SEG39135726
Title	Lower Trunnion Bridge Beam Elbow to Sill Joint Rivet Analysis			

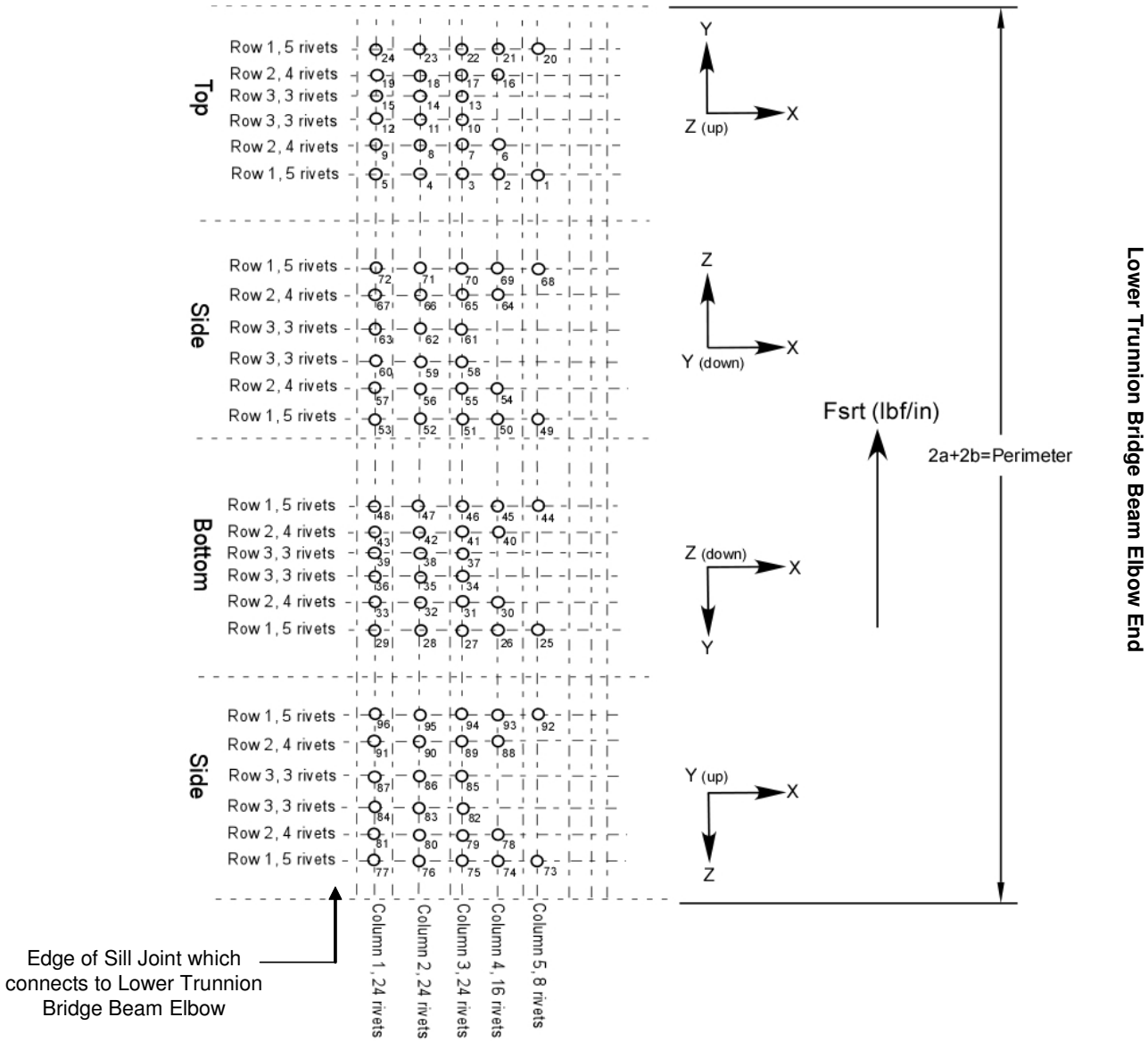

Figure 2.5.1.2-2 Layout of Rivet Patterns used to Calculate Rivet Pitch for Torsional Load

Calculation of Rivet Pitch:

It is assumed that all rivets share the torsion load equally. Therefore, each column of rivets has the same maximum load per rivet due to torsion.

Perimeter of rivet pattern $per := 2 \cdot a + 2 \cdot b$ $per = 23.8 \cdot in$

Loads in rivet due to torsion $Psrt := Fsrt \cdot \left(\frac{per}{Nsps} \right)$ $\max(Psrt) = 57.9 \cdot lbf$

Shear load in rivets due to beam axial load $Prta := \frac{Fxa}{Nsps}$ $\max(Prta) = 347 \cdot lbf$

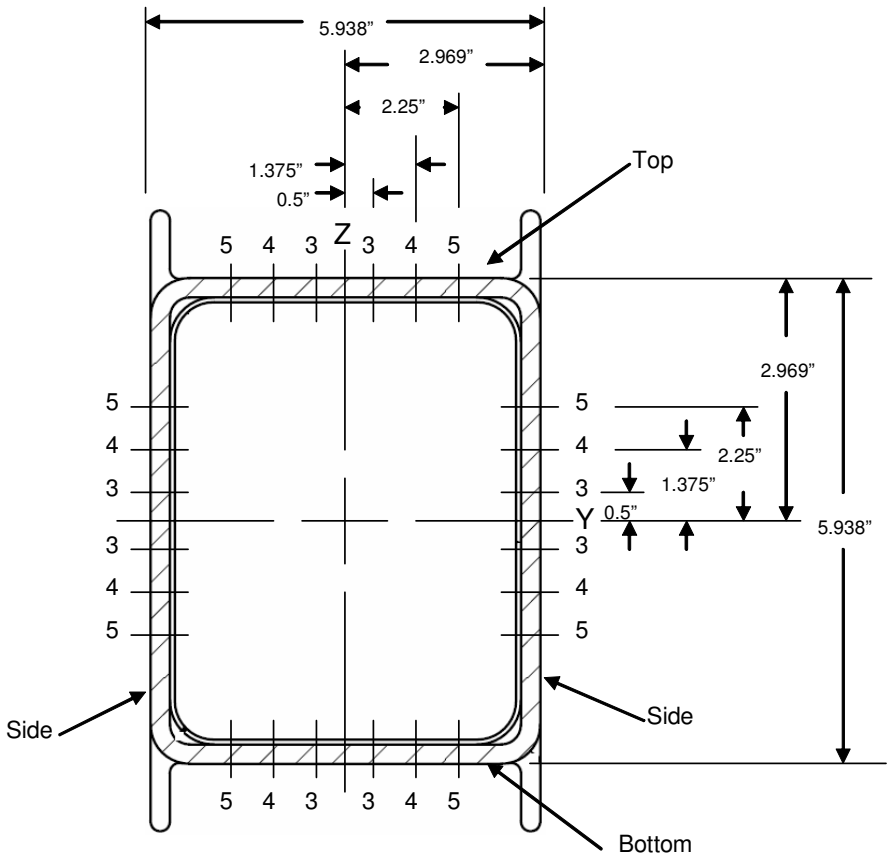

Rivet Dimension Variables:
(Ref. SDG39135735 and SDG39135734)

$z1 := .500 \cdot in$

$z2 := 1.375 \cdot in$

$z3 := 2.250 \cdot in$

$z4 := 2.969 \cdot in$

$y1 := .500 \cdot in$

$y2 := 1.375 \cdot in$

$y3 := 2.250 \cdot in$

$y4 := 2.969 \cdot in$

Note: Figure is for reference only.

Eccentrically Loaded Rivets due to My and Mz Moments:

Rivet Coordinate System Data

$j := 1 .. rows(coord)$ Counter for Coordinate Points

$x_j := coord_{j,2}$ Rivet Coordinate Points for x-direction

$y_j := coord_{j,3}$ Rivet Coordinate Points for y-direction

$z_j := coord_{j,4}$ Rivet Coordinate Points for z-direction

$$rivet_counter_j := \frac{coord_{j,1}}{in}$$

Prepared By	B. Dyer	04/14/05	Engineering and Science Contract Group *Structural Analysis Section*	File Name ElbowtoSilljnt.mcd
Revised By	G. Reyes	06/23/09		
Checked By	C. Bala			Draw ing No. SEG39135726
Title	Lower Trunnion Bridge Beam Elbow to Sill Joint Rivet Analysis			

For Moment My:

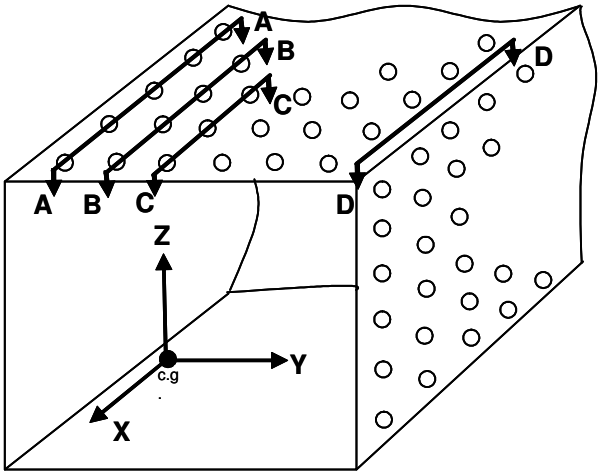

Eccentrically Loaded Rivet Pattern about My

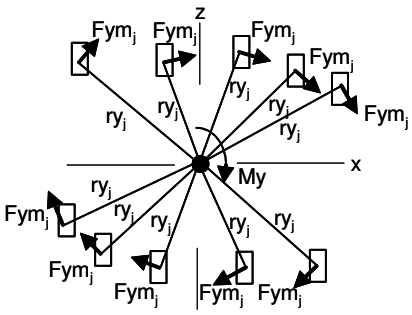

Cross-Section A-A

(Row 1, 20 rivets)

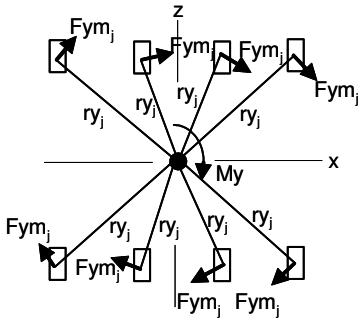

Cross-Section B-B

(Row 2, 16 rivets)

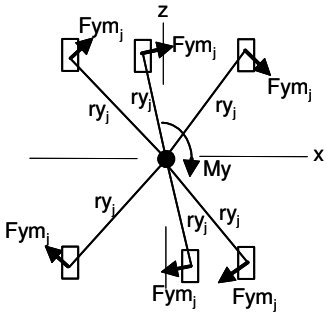

Cross-Section C-C

(Row 3, 12 rivets)

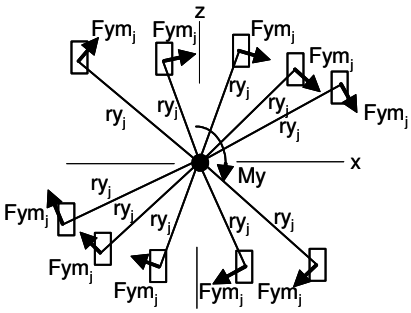

Cross-Section D-D

(Represents both sides, 24 rivets)

Note: Figure is for reference only.

$$ry_j := \left[\left(x_j\right)^2 + \left(z_j\right)^2\right]^{\frac{1}{2}}$$

radial distance to each rivet from the centriod of the rivet pattern

$$sigry := \sum_{j=1}^{rows(coord)} \left(ry_j\right)^2$$

Sum of the radial directions for all rivets in the rivet pattern

$$\beta y_j := atan2\left(x_j, z_j\right)$$

Angle between resultant vector
and tension or shear vectors

(Note: The angle θ is defined off of the x-axis.
See below.)

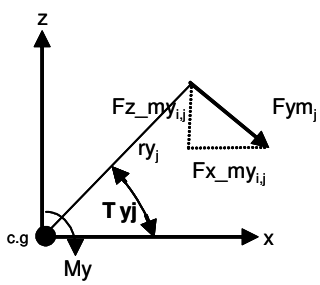

$$Fym_{i,j} := \frac{(-My)_i \cdot ry_j}{sigry}$$

Resultant Load at
Each Rivet

$$Fz_my_{i,j} := Fym_{i,j} \cdot \sin\left(\frac{u}{2} - \beta y_j\right)$$

z - component of Fym

$$Fx_my_{i,j} := Fym_{i,j} \cdot -\cos\left(\frac{u}{2} - \beta y_j\right)$$

x - component of Fym

For Moment Mz:

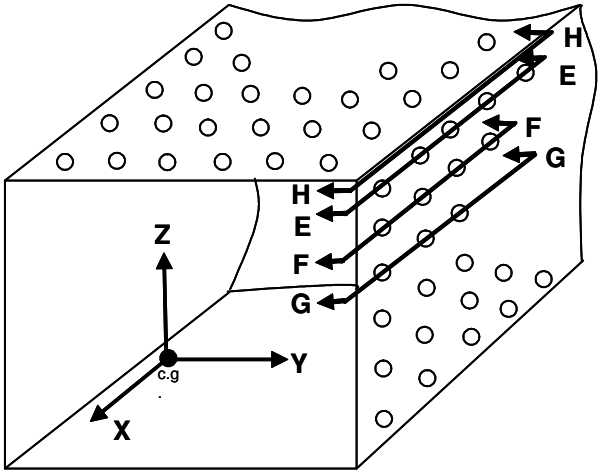

Eccentrically Loaded Rivet Pattern about Mz

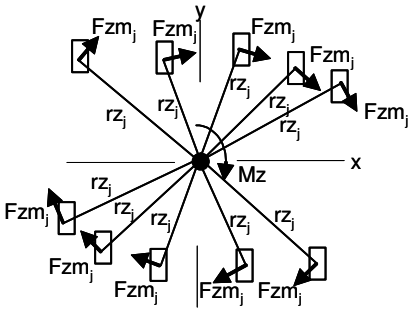

Cross-Section E-E

(Row 1, 20 rivets)

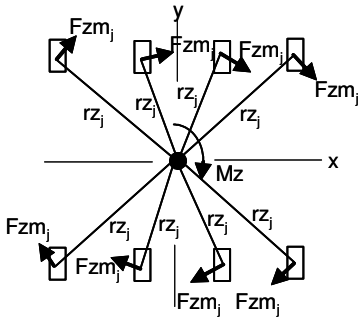

Cross-Section F-F

(Row 2, 16 rivets)

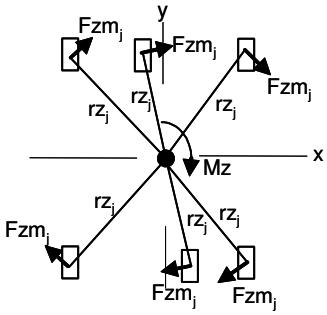

Cross-Section G-G

(Row 3, 12 rivets)

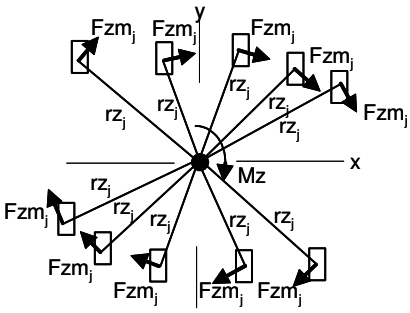

Cross-Section H-H

(Represents both sides, 24 rivets)

Note: Figure is for reference only.

$$rz_j := \left[\left(x_j\right)^2 + \left(y_j\right)^2\right]^{\frac{1}{2}}$$

Radial distance to each rivet from the centriod of the rivet pattern along the z-axis

$$sigrz := \sum_{j=1}^{rows(coord)} \left(rz_j\right)^2$$

Sum of the radial directions for all rivets in the rivet pattern

$$\beta z_j := atan2\left(x_j, y_j\right)$$

Angle between resultant vector and tension or shear vectors

$$Fzm_{i,j} := \frac{(Mz)_i \cdot rz_j}{sigrz}$$

Resultant Load at Each Rivet

(Note: The angle θ is defined off of the x-axis.
See below.)

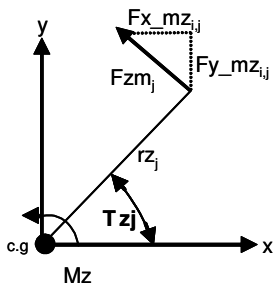

$$Fy_mz_{i,j} := Fzm_{i,j} \cdot \sin\left(\frac{u}{2} - \beta z_j\right)$$

y - component of Fzm

$$Fx_mz_{i,j} := Fzm_{i,j} \cdot -\cos\left(\frac{u}{2} - \beta z_j\right)$$

x - component of Fzm

$$F_{i,j} := \begin{cases} Fz_my_{i,j} & \text{if } rivet_counter_j \le 48 \\ Fy_mz_{i,j} & \text{otherwise} \end{cases}$$

Total Axial Load due to My and Mz Moments

$$\max\left(\overrightarrow{|F|}\right) = 635.2 \cdot lbf$$

Note: The axial loading is reacted by the beam and socket and not taken by the rivet. See section 2.1.8 for beam and socket analysis.

Total Rivet Shear Load:

$$Pt_{i,j} := \begin{cases} \sqrt{\left(Prta_i + Fx_my_{i,j} + Fx_mz_{i,j}\right)^2 + \left(Psrt_i + Fsry_i + Fy_mz_{i,j}\right)^2} & \text{if } j \le 48 \\ \sqrt{\left(Prta_i + Fx_my_{i,j} + Fx_mz_{i,j}\right)^2 + \left(Psrt_i + Fsrz_i + Fz_my_{i,j}\right)^2} & \text{otherwise} \end{cases}$$

$$\max(Pt) = 1703.1 \cdot lbf$$

Margin of safety for Total Rivet Load:

$$MS1t := \frac{Fs \cdot cf}{Pt \cdot FSu \cdot FF} - 1$$

$$\min(MS1t) = 0.025$$

(Note: Fitting Factor (FF) included for misalignment, different shim thicknesses, etc. ...)

The following will output an array for each row of rivets with element identity, load case, load, and margin of safety from left to right.

$$output := augment(ID, LC, MS1t)$$

$rows(output) = 512$ Number of rows in the "output" array

$cols(output) = 98$ Number of columns in the "output" array

The "output" array is then searched for the location of the minimum margin. The match function is used to locate the minimum margin of safety and the element identity, load case, rivet location, and maximum load are pulled from the array.

$$match(\min(MS1t), MS1t) = \begin{bmatrix} 313 \\ 49 \end{bmatrix}$$

$min_LC := output_{313,2}$ Load Case for Minimum Margin of Safety

$min_ID := output_{313,1}$ Element ID for Minimum Margin of Safety

Rivet number 49 is the rivets with the minimum margin of safety of 0.025

Minimum Margin of Safety:

Minimum Margin of Safety	$\min(MS1t) = 0.025$
Element ID for Minimum Margin of Safety	$min_ID = 1217$
Load Case for Minimum Margin of Safety	$min_LC = 2015$
Maximum Rivet Load for Minimum Margin of Safety	$\max(Pt) = 1703.1 \cdot lbf$
Rivets with Minimum Margin of Safety	Rivet number 49 (See figure 2.5.1.2 - 2 for rivet location)

Bearing on Hole Wall:

Hole diameter $dh := 0.257 \cdot in$ (Ref. SEG39135726, Flag Note 2)

Tube thickness $tp := 0.25 \cdot in$ (Ref. SDG39135734)

Bearing area $Ab := dh \cdot tp$ $Ab = 0.06425 \cdot in^2$

Max. load per rivet $max(Pt) = 1703.1 \cdot lbf$

Max. bearing stress $b := \frac{max(Pt)}{Ab}$ $b = 26507.2 \cdot psi$

Margin of safety $MSb := \frac{Fbru \cdot cb}{b \cdot FSu \cdot FF} - 1$ $MSb = 1.91$

Shear tear out:

Edge distance $e := 0.500 \cdot in$ (Ref. SDG39135730)

Note: Using this e is conservative, since actual rivet force is in general at some angle.

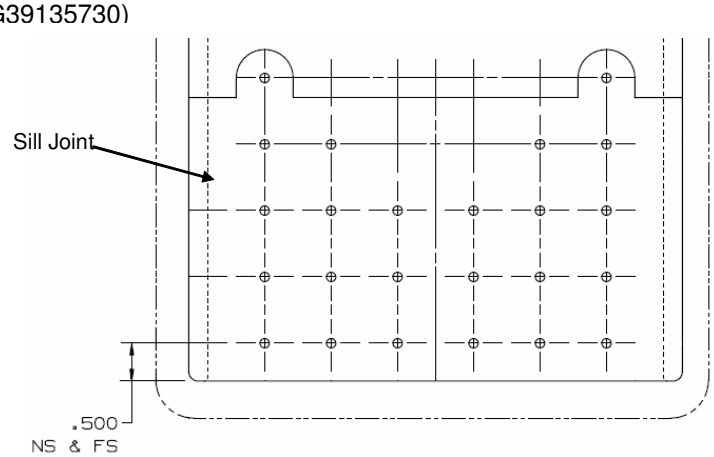

Hole diameter $dh := 0.257 \cdot in$

E over D ratio $\frac{e}{dh} = 1.946$

Tube thickness $tp := 0.25 \cdot in$

Shear out area $As := 2 \cdot \left(e - \frac{dh}{2} \cdot \cos(40 \cdot deg)\right) \cdot tp$ $As = 0.2008 \cdot in^2$

Max. load per rivet $max(Pt) = 1703.1 \cdot lbf$

Max. shear tear out stress $=s := \frac{max(Pt)}{As}$ $=s = 8482.3 \cdot psi$

Margin of safety $MSsh := \frac{Fsu \cdot cd}{=s \cdot FSu \cdot FF} - 1$ $MSsh = 2.029$

2.5.1.3 Sill Bracket to Sill Tube

Sill Bracket to Sill Tube Rivet Analysis

The sill bracket SDG39135738 connects to the sill tube SDG39135739 in 2 locations. The sill bracket is fastened to the sill tube, with NAS1398DFC8, 0.25 in rivets. The sill bracket is machined from 7050-T7451 plate and the sill tube is extruded from 7075-T73511. CBEAM elements 1705 and 1706 in the loads model represents the portion of the sill bracket that interfaces with the sill tube. The rivet pattern centroid is 3.918 in from end A of the beam element. Element length is 5.750 in. See Appendix C4 for AMS Rivet Pattern Location Table.

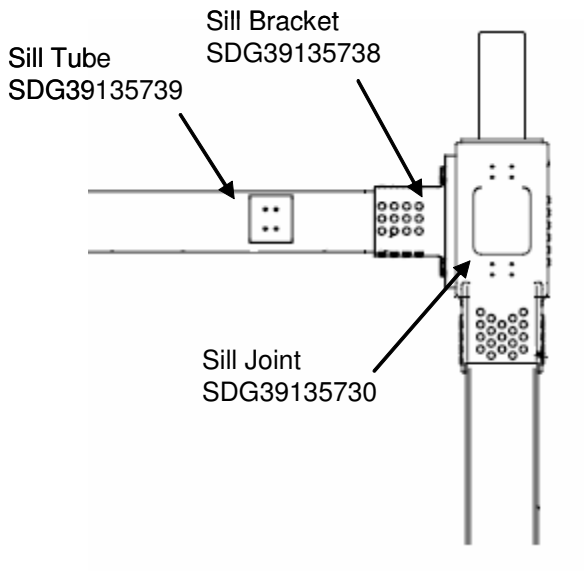

Material Strength for Rivets:

Rivets are NAS1398 type D, 0.25 in. blind protruding head 2017 Aluminum rivets

(Ref. NAS1400, sheet 5)

Max. rivet shear strength $Fs := 1970 \cdot lbf$

Material Strength for Sill Tube:

Tube material is extruded 7075-T73511 with e/D=2.0

(Ref. MIL-HDBK-5J, Table 3.7.6.0(g2))

Allowable bearing strength $Fbru := 119000 \cdot psi$

Allowable shear strength $Fsu := 35000 \cdot psi$

Factors of safety:

Ultimate Factor of Safety: $FSu := 1.4$

Fitting Factor: $FF := 1.15$

Temperature:

Maximum Temperature $Tmax := 150 \cdot deg$

(Ref. Appendix C2, AMS-02 Temperature Table)

Temperature Correction Factor (For Fs) $cf := .98$

(Ref. Appendix C13)

Temperature Correction Factor (For Fsu) $cd := .99$

(Ref. MIL-HDBK-5J, Figure 3.7.6.1.2(b))

Temperature Correction Factor (For Fbru) $cb := .92$

(Ref. MIL-HDBK-5J, Figure 3.7.6.1(a))

Loads model 2-06 was run in NASTRAN for 192 load cases. Beam element forces were recovered, and given in the data file "SjointtoStube.dat" for elements 1705 and 1706.

$data := READPRN("SjointtoStube.dat")$ $ORIGIN := 1$ $i := 1 .. rows(data)$

Loads from Beam End A:

Axial Load $Fxa_i := data_{i,7} \cdot lbf$

Shear in Y axis $Fya_i := data_{i,5} \cdot lbf$

Shear in Z axis $Fza_i := data_{i,6} \cdot lbf$

Torsion $Mxa_i := data_{i,8} \cdot in \cdot lbf$

Moment about Y axis $Mya_i := -data_{i,4} \cdot in \cdot lbf$

Moment about Z axis $Mza_i := data_{i,3} \cdot in \cdot lbf$

$ID_i := data_{i,1}$ $LC_i := data_{i,2}$

Loads from Beam End B:

Axial Load $Fxb_i := data_{i,13} \cdot lbf$

Shear in Y axis $Fyb_i := data_{i,11} \cdot lbf$

Shear in Z axis $Fzb_i := data_{i,12} \cdot lbf$

Torsion $Mxb_i := data_{i,14} \cdot in \cdot lbf$

Moment about Y axis $Myb_i := -data_{i,10} \cdot in \cdot lbf$

Moment about Z axis $Mzb_i := data_{i,9} \cdot in \cdot lbf$

Beam Section Properties:

Thickness of tube $t := 0.25 \cdot in$ (Ref. SDG39135739)

Width of tube $a := 4.0 \cdot in$ (Ref. SDG39135739)

Depth of tube $b := 4.0 \cdot in$ (Ref. SDG39135739)

Enclosed area of mean width and mean height $Am := (a - t) \cdot (b - t)$ $Am = 14.06 \cdot in^2$

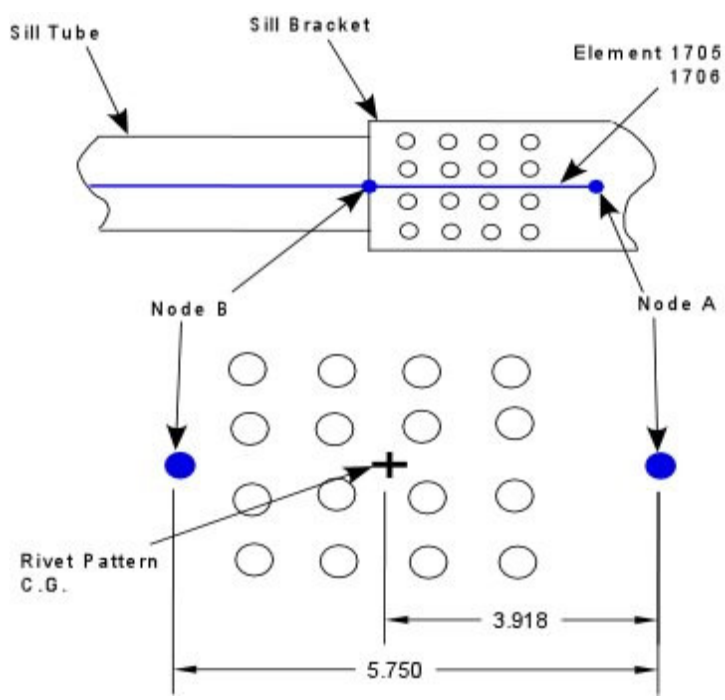

Figure 2.5.1.3-1 Rivet Pattern Dimensions for Beam Element Ends A and B.

Note: Figure is for reference only.

Bending Moment Interpolation:

NASTRAN gives beam moments at ends A and B of the beam element. The center of gravity of the rivet pattern falls between nodes A and B, therefore, the moment at the center of the rivet pattern needs to be interpolated.

Distance from end A to the center of the rivet pattern $c := 3.918 \cdot in$

Total length of beam element $d := 5.750 \cdot in$

(See Figure 2.5.1.3-1 and Ref. Appendix C4)

Moment My:

Difference $Mydiff_i := (Mya_i - Myb_i)$

Linearly interpolate at centroid of rivets

$My1 := \frac{c}{d} \cdot Mydiff \qquad My2 := \frac{d-c}{d} \cdot Mydiff$

Moment My interpolated at centroid of rivets

$My := Myb + My2$

Moment Mz:

Difference $Mzdiff_i := (Mza_i - Mzb_i)$

Linearly interpolate at centroid of rivets

$Mz1 := \frac{c}{d} \cdot Mzdiff \qquad Mz2 := \frac{d-c}{d} \cdot Mzdiff$

Moment Mz interpolated at centroid of rivets

$Mz := Mzb + Mz2$

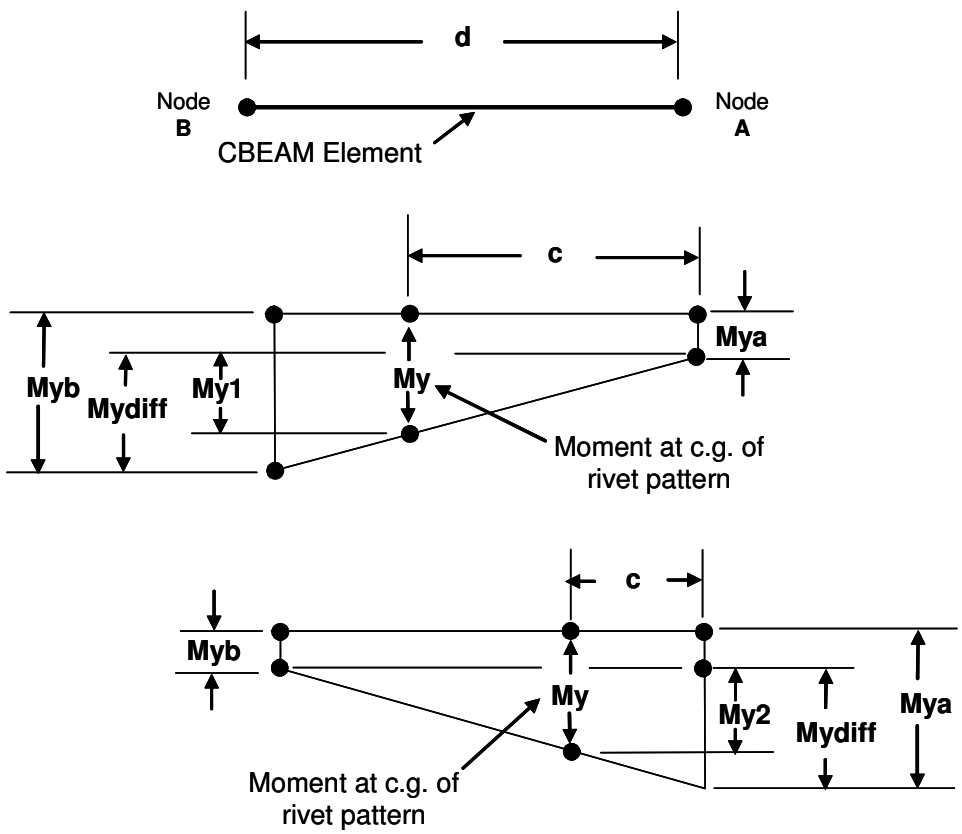

Free Body Diagram for Moment Distribution for My Interpolation
(Note: Similar moment distribution is used for Mz interpolation.)

Load in Rivets at Lower Bridge Beam to Elbow Joint:

Total Number of rivets in beam end:

$Nsps := 48$

Number of rivets reacting Fz shear load:

$psz := 24$

Number of rivets reacting Fy shear loads:

$psy := 24$

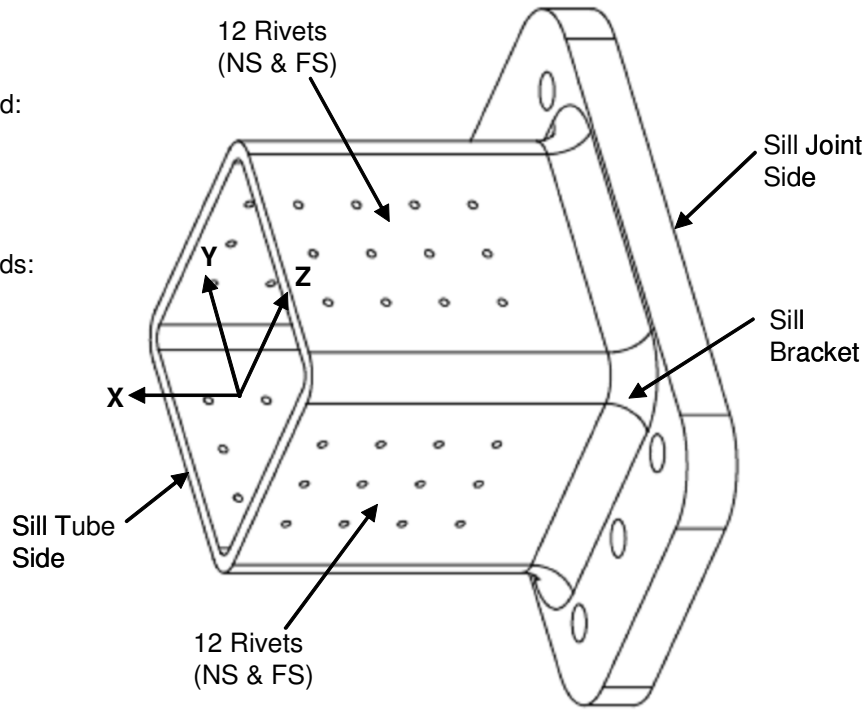

Shear load/rivet due to Fy $\quad Fsry := \frac{Fya}{psy} \quad max(Fsry) = 21.5 \cdot lbf$

Shear load/rivet due to Fz $\quad Fsrz := \frac{Fza}{psz} \quad max(Fsrz) = 35.4 \cdot lbf$

Note: The Fya and Fza forces have the same magnitude as the Fyb and Fzb forces. The end A forces are used above.

Shear flow due to torsion (Ref. Bruhn section A6.8) $\quad Fsrt := \frac{Mxa}{2 \cdot Am} \quad max(Fsrt) = 20.2 \cdot \frac{lbf}{in}$

Note: The shear load (Fsrt) is used to calculate the torsional load (Psrt) in the rivet due to the pitch on the rivet pattern. See Figure 2.5.1.3-2.

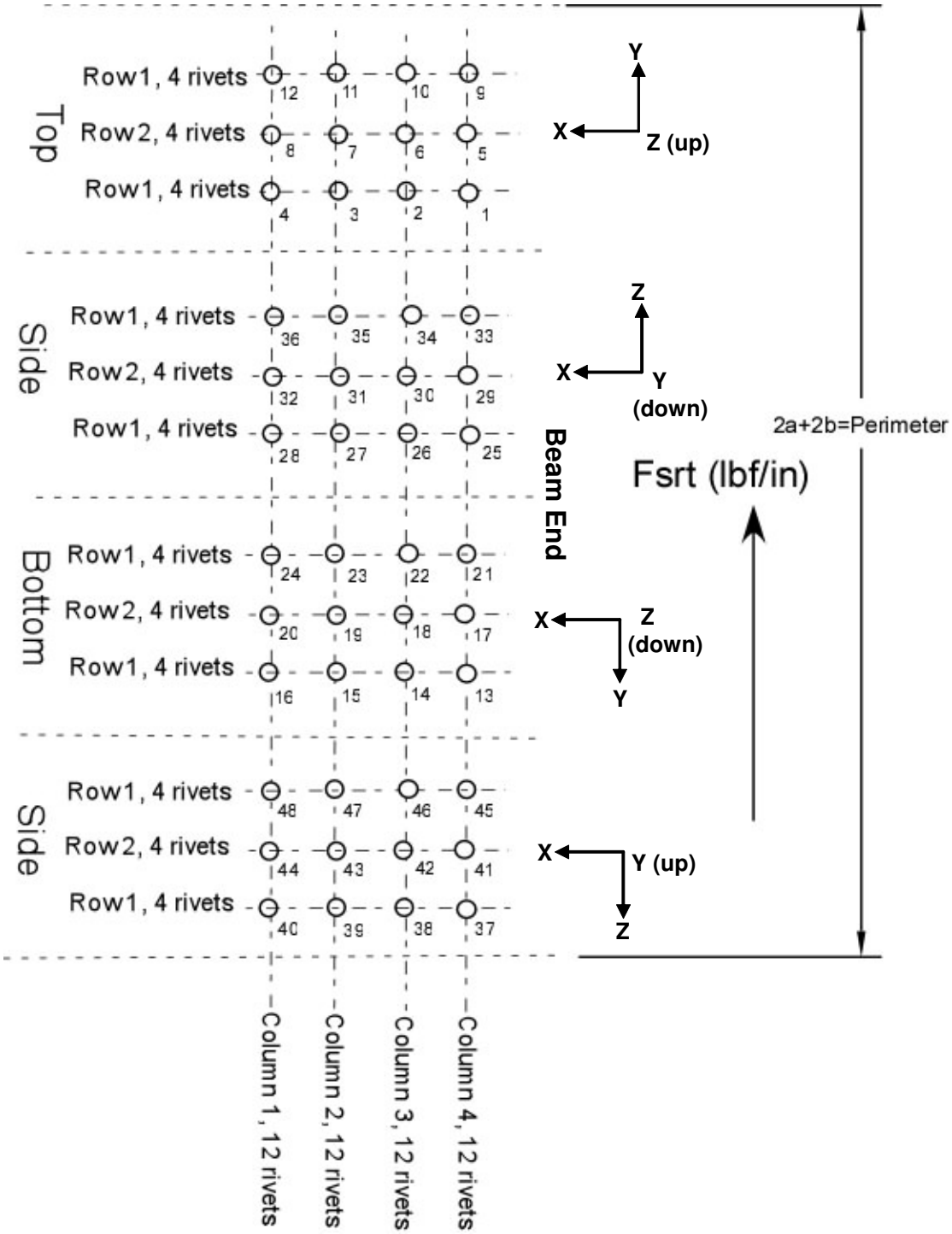

Figure 2.5.1.3-2 Layout of Rivet Patterns used to Calculate Rivet Pitch for Torsional Load

Calculation of Rivet Pitch:

It is assumed that all rivets share the torsion load equally. Therefore, each column of rivets has the same maximum load per rivet due to torsion.

Perimeter of rivet pattern $per := 2 \cdot a + 2 \cdot b$ $per = 16 \cdot in$

Loads in rivet due to torsion $Psrt := Fsrt \cdot \left(\frac{per}{Nsps} \right)$ $\max(Psrt) = 6.7 \cdot lbf$

Shear load in rivets due to beam axial load $Prta := \frac{Fxa}{Nsps}$ $\max(Prta) = 100.9 \cdot lbf$

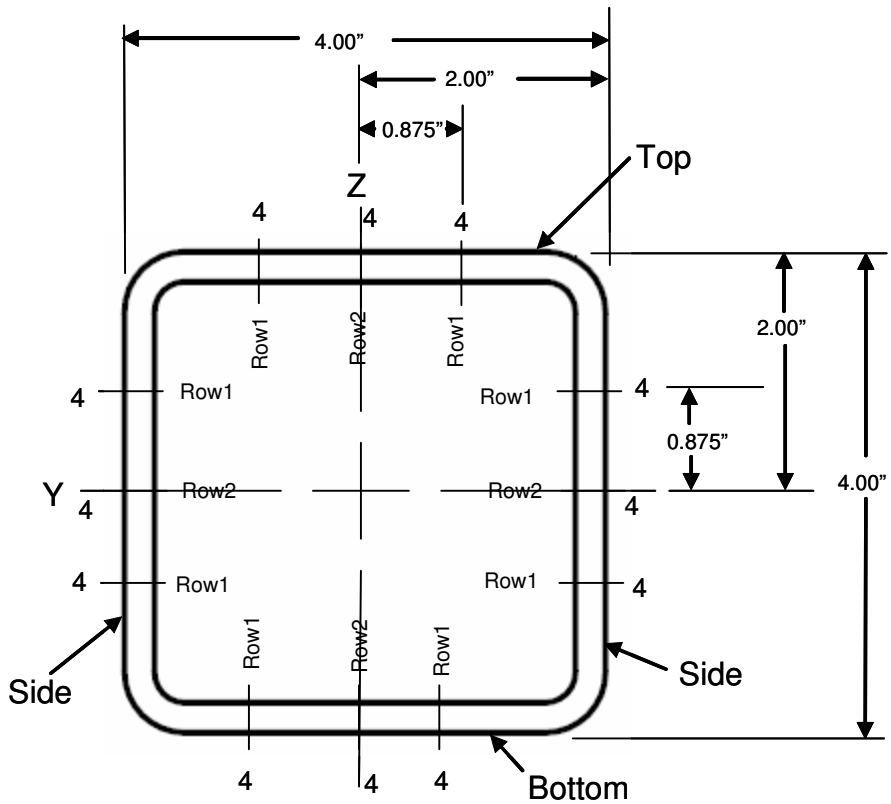

Rivet Dimension Variables:
(Ref. SDG39135738)

$z1 := .875 \cdot in$

$z2 := 2.00 \cdot in$

$z3 := 4.00 \cdot in$

$y1 := .875 \cdot in$

$y2 := 2.00 \cdot in$

$y3 := 4.00 \cdot in$

Note: Figure is for reference only.

Eccentrically Loaded Rivets due to My and Mz Moments:

Rivet Coordinate System Data

$j := 1 .. rows(coord)$ Counter for Coordinate Points

$x_j := coord_{j,2}$ Rivet Coordinate Points for x-direction

$y_j := coord_{j,3}$ Rivet Coordinate Points for y-direction

$z_j := coord_{j,4}$ Rivet Coordinate Points for z-direction

$$rivet_counter_j := \frac{coord_{j,1}}{in}$$

For Moment My:

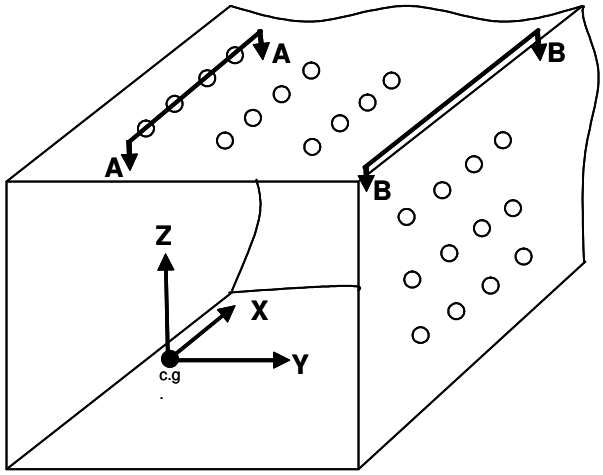

Eccentrically Loaded Rivet Pattern about My

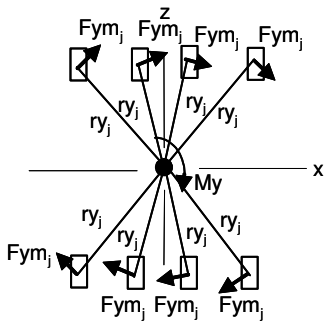

Cross-Section A-A

(Row 1and Row 2, 8 rivets ea.)

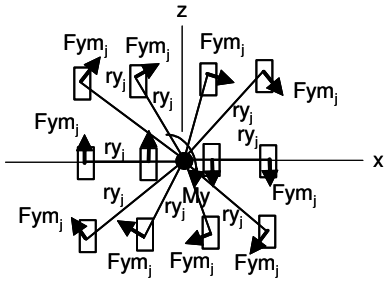

Cross-Section B-B

(Represents both sides, 12 rivets)

Note: Figure is for reference only.

$$ry_j := \left[\left(x_j\right)^2 + \left(z_j\right)^2\right]^{\frac{1}{2}}$$

Radial distance to each rivet from the centroid of the rivet pattern

$$sigry := \sum_{j=1}^{rows(coord)} \left(ry_j\right)^2$$

Sum of the radial directions for all rivets in the rivet pattern

$$\beta y_j := atan2\left(x_j, z_j\right)$$

Angle between resultant vector
and tension or shear vectors

(Note: The angle θ is defined off of the x-axis.
See below.)

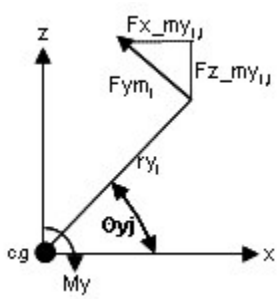

$$Fym_{i,j} := \frac{My_i \cdot ry_j}{sigry}$$

Resultant Load at
Each Rivet

$$Fz_my_{i,j} := Fym_{i,j} \cdot \sin\left(\frac{u}{2} - \beta y_j\right)$$

z - component of Fym

$$Fx_my_{i,j} := Fym_{i,j} \cdot -\cos\left(\frac{u}{2} - \beta y_j\right)$$

x - component of Fym

Prepared By	B. Dyer	04/17/05	Engineering and Science Contract Group *Structural Analysis Section*	File Name SillbrktoStube.mcd
Revised By	G. Reyes	06/23/09		
Checked By	C. Bala			Draw ing No. SEG39135726
Title	Sill Bracket to Sill Tube Rivet Analysis			

For Moment Mz:

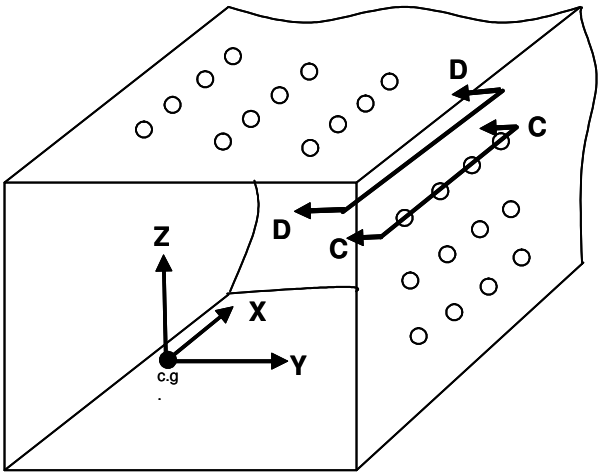

Eccentrically Loaded Rivet Pattern about Mz

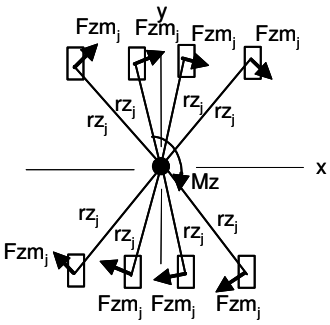

Cross-Section C-C

(Row 1and Row 2, 8 rivets ea.)

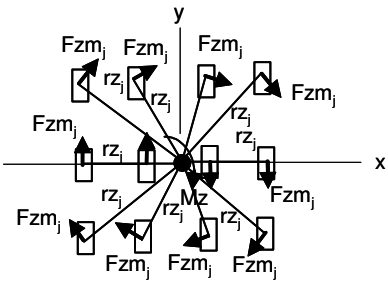

Cross-Section D-D

(Represents both sides, 12 rivets)

Note: Figure is for reference only.

$$rz_j := \left[\left(x_j\right)^2 + \left(y_j\right)^2\right]^{\frac{1}{2}}$$

Radial distance to each rivet from the centroid of the rivet pattern

$$sigrz := \sum_{j=1}^{rows(coord)} \left(rz_j\right)^2$$

Sum of the radial directions for all rivets in the rivet pattern

$$\beta z_j := atan2\left(x_j, y_j\right)$$

Angle between resultant vector and tension or shear vectors

$$Fzm_{i,j} := \frac{(-Mz)_i \cdot rz_j}{sigrz}$$

Resultant Load at Each Rivet

(Note: The angle θ is defined off of the x-axis.
See below.)

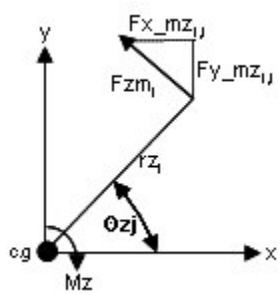

$$Fy_mz_{i,j} := Fzm_{i,j} \cdot \sin\left(\frac{u}{2} - \beta z_j\right)$$

y - component of Fzm

$$Fx_mz_{i,j} := Fzm_{i,j} \cdot -\cos\left(\frac{u}{2} - \beta z_j\right)$$

x - component of Fzm

$$F_{i,j} := \begin{cases} Fz_my_{i,j} & \text{if } rivet_counter_j \le 24 \\ Fy_mz_{i,j} & \text{otherwise} \end{cases}$$

Total Axial Load due to My and Mz Moments

$$\max\left(\overrightarrow{|F|}\right) = 210.9 \cdot lbf$$

Note: The axial loading is reacted by the beam and socket and not taken by the rivet. See section 2.1.11 for beam and socket analysis.

Total Rivet Shear Load:

$$Pt_{i,j} := \begin{cases} \sqrt{\left(Prta_i + Fx_my_{i,j} + Fx_mz_{i,j}\right)^2 + \left(Psrt_i + Fsry_i + Fy_mz_{i,j}\right)^2} & \text{if } j \le 24 \\ \sqrt{\left(Prta_i + Fx_my_{i,j} + Fx_mz_{i,j}\right)^2 + \left(Psrt_i + Fsrz_i + Fz_my_{i,j}\right)^2} & \text{otherwise} \end{cases}$$

$\max(Pt) = 532.2 \cdot lbf$

$Pt_{40,13} = 532.2 \cdot lbf$

Margin of safety for Total Rivet Load:

$$MS1t := \frac{Fs \cdot cf}{Pt \cdot FSu \cdot FF} - 1$$

$\min(MS1t) = 1.253$

(Note: Fitting Factor (FF) included for misalignment, different shim thicknesses, etc. ...)

The following will output an array for each row of rivets with element identity, load case, load, and margin of safety from left to right.

$output := augment(ID, LC, MS1t)$

$rows(output) = 384$ Number of rows in the "output" array

$cols(output) = 50$ Number of columns in the "output" array

The "output" array is then searched for the location of the minimum margin. The match function is used to locate the minimum margin of safety and the element identity, load case, rivet location, and maximum load are pulled from the array.

$$match(\min(MS1t), MS1t) = \begin{bmatrix} \begin{pmatrix} 40 \\ 13 \end{pmatrix} \end{bmatrix}$$

$min_LC := output_{40,2}$ Load Case for Minimum Margin of Safety

$min_ID := output_{40,1}$ Element ID for Minimum Margin of Safety

Rivet numbers 13 are the rivets with the minimum margin of safety of 1.253.

Minimum Margin of Safety:

Minimum Margin of Safety	$min(MS1t) = 1.253$
Element ID for Minimum Margin of Safety	$min_ID = 1706$
Load Case for Minimum Margin of Safety	$min_LC = 1020$
Maximum Rivet Load for Minimum Margin of Safety	$max(Pt) = 532.2 \cdot lbf$
Rivets with Minimum Margin of Safety	Rivet numbers 13 (See figure 2.5.1.3 - 2 for rivet location)

Bearing on Hole Wall:

Hole diameter $dh := 0.257 \cdot in$ (Ref. SEG39135726, Flag Note 2)

Tube thickness $tp := 0.25 \cdot in$ (Ref. SDG39135739)

Bearing area $Ab := dh \cdot tp$ $Ab = 0.064 \cdot in^2$

Max. load per rivet $max(Pt) = 532.2 \cdot lbf$

Max. bearing stress $b := \frac{max(Pt)}{Ab}$ $b = 8282.6 \cdot psi$

Margin of safety $MSb := \frac{Fbru \cdot cb}{b \cdot FSu \cdot FF} - 1$ $MSb = 7.21$

Shear tear out:

Edge distance $e := 0.520 \cdot in$ (Ref. SDG39135738)

Note: Using this e is conservative, since actual rivet force is in general at some angle.

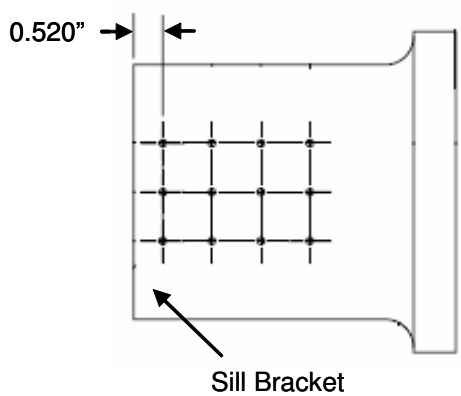

Hole diameter $dh := 0.257 \cdot in$

E over D ratio $\frac{e}{dh} = 2.023$

Tube thickness $tp := 0.25 \cdot in$

Shear out area $As := 2 \cdot \left(e - \frac{dh}{2} \cdot \cos(40 \cdot deg)\right) \cdot tp$ $As = 0.2108 \cdot in^2$

Max. load per rivet $max(Pt) = 532.2 \cdot lbf$

Max. shear tear out stress $=s := \frac{max(Pt)}{As}$ $=s = 2524.7 \cdot psi$

Margin of safety $MSsh := \frac{Fsu \cdot cd}{=s \cdot FSu \cdot FF} - 1$ $MSsh = 7.525$

2.5.1.4 Diagonal Sill Bracket to Sill Tube

Prepared By	B. Dyer	04/24/06	Engineering and Science Contract Group *Structural Analysis Section*	File Name diagStoStube.mcd
Revised By	G. Reyes	06/23/09		
Checked By	C. Bala			Drawing No. SEG39135726
Title	Diagonal Sill Bracket to Sill Tube Rivet Analysis			

Diagonal Sill Bracket to Sill Tube Rivet Analysis

The diagonal sill bracket SDG39135740 connects to the sill tube SDG39135739 in 2 locations. The diagonal sill bracket is fastened to the sill tube, with NAS1398DFC8, 0.25 in rivets. The diagonal sill bracket is machined from 7050-T7451 plate and the sill tube is extruded from 7075-T73511. CBEAM elements 1711 and 1712 in the loads model represents the portion of the diagonal sill bracket that interfaces with the sill tube. The rivet pattern centroid is 2.667 in from end A of the beam element. Element length is 4.500 in. See Appendix C4 for AMS Rivet Pattern Location Table.

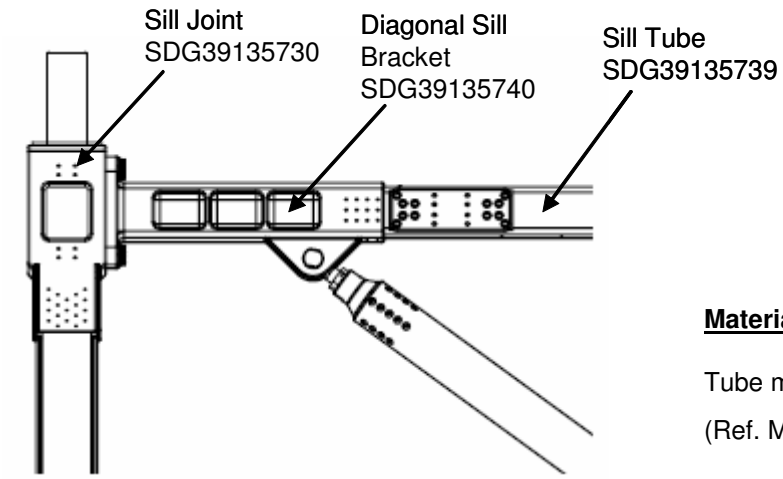

Material Strength for Rivets:

Rivets are NAS1398 type D, 0.25 in. blind protruding head 2017 Aluminum rivets

(Ref. NAS1400, sheet 5)

Max. rivet shear strength $Fs := 1970 \cdot lbf$

Material Strength for Sill Tube:

Tube material is extruded 7075-T73511 with e/D=2.0

(Ref. MIL-HDBK-5J, Table 3.7.6.0(g2))

Allowable bearing strength $Fbru := 119000 \cdot psi$

Allowable shear strength $Fsu := 35000 \cdot psi$

Factors of safety:

Ultimate Factor of Safety: $FSu := 1.4$

Fitting Factor: $FF := 1.15$

Temperature:

Maximum Temperature $Tmax := 150 \cdot deg$

(Ref. Appendix C2, AMS-02 Temperature Table)

Temperature Correction Factor (For Fs) $cf := .98$

(Ref. Appendix C13)

Temperature Correction Factor (For Fsu) $cd := .99$

(Ref. MIL-HDBK-5J, Figure 3.7.6.1.2(b))

Temperature Correction Factor (For Fbru) $cb := .92$

(Ref. MIL-HDBK-5J, Figure 3.7.6.1(a))

Loads model 2-06 was run in NASTRAN for 192 load cases. Beam element forces were recovered, and given in the data file "SjointtoStube.dat" for elements 1711 and 1712.

$data := READPRN(\text{"diagStoStube.dat"})$ $ORIGIN := 1$ $i := 1 .. rows(data)$

Loads from Beam End A:

Axial Load $Fxa_i := data_{i,7} \cdot lbf$

Shear in Y axis $Fya_i := data_{i,5} \cdot lbf$

Shear in Z axis $Fza_i := data_{i,6} \cdot lbf$

Torsion $Mxa_i := data_{i,8} \cdot in \cdot lbf$

Moment about Y axis $Mya_i := -data_{i,4} \cdot in \cdot lbf$

Moment about Z axis $Mza_i := data_{i,3} \cdot in \cdot lbf$

Loads from Beam End B:

Axial Load $Fxb_i := data_{i,13} \cdot lbf$

Shear in Y axis $Fyb_i := data_{i,11} \cdot lbf$

Shear in Z axis $Fzb_i := data_{i,12} \cdot lbf$

Torsion $Mxb_i := data_{i,14} \cdot in \cdot lbf$

Moment about Y axis $Myb_i := -data_{i,10} \cdot in \cdot lbf$

Moment about Z axis $Mzb_i := data_{i,9} \cdot in \cdot lbf$

$ID_i := data_{i,1}$ $LC_i := data_{i,2}$

$ycg := .182 \cdot in$ y direction offset due to unsymetrical rivet pattern

$Mxa_i := Mxa_i + (Fza_i \cdot ycg)$ Total Torsional Moment due to y direction offset

Beam Section Properties:

Thickness of tube $t := 0.25 \cdot in$ (Ref. SDG39135739)

Width of tube $a := 4.0 \cdot in$ (Ref. SDG39135739)

Depth of tube $b := 4.0 \cdot in$ (Ref. SDG39135739)

Enclosed area of mean width and mean height $Am := (a - t) \cdot (b - t)$ $Am = 14.06 \cdot in^2$

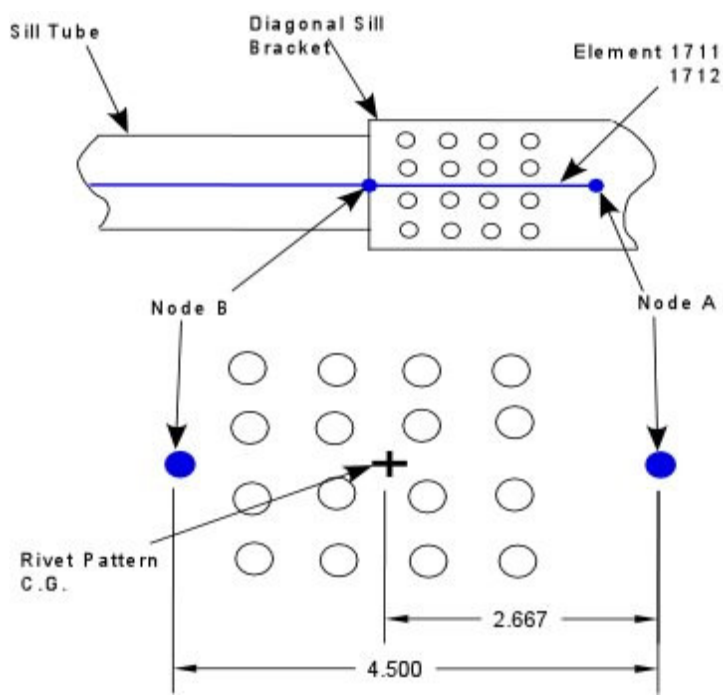

Figure 2.5.1.4-1 Rivet Pattern Dimensions for Beam Element Ends A and B.

Note: Figure is for reference only.

Bending Moment Interpolation:

NASTRAN gives beam moments at ends A and B of the beam element. The center of gravity of the rivet pattern falls between nodes A and B, therefore, the moment at the center of the rivet pattern needs to be interpolated.

Distance from end A to the center of the rivet pattern $c := 2.667 \cdot in$

Total length of beam element $d := 4.500 \cdot in$

(See Figure 2.5.1.4-1 and Ref. Appendix C4)

Moment My:

Difference $Mydiff_i := (Mya_i - Myb_i)$

Linearly interpolate at centroid of rivets

$My1_i := \frac{c}{d} \cdot Mydiff_i \qquad My2_i := \frac{d-c}{d} \cdot Mydiff_i$

Moment My interpolated at centroid of rivets

$My := Myb + My2$

Moment Mz:

Difference $Mzdiff_i := (Mza_i - Mzb_i)$

Linearly interpolate at centroid of rivets

$Mz1_i := \frac{c}{d} \cdot Mzdiff_i \qquad Mz2_i := \frac{d-c}{d} \cdot Mzdiff_i$

Moment Mz interpolated at centroid of rivets

$Mz := Mzb + Mz2$

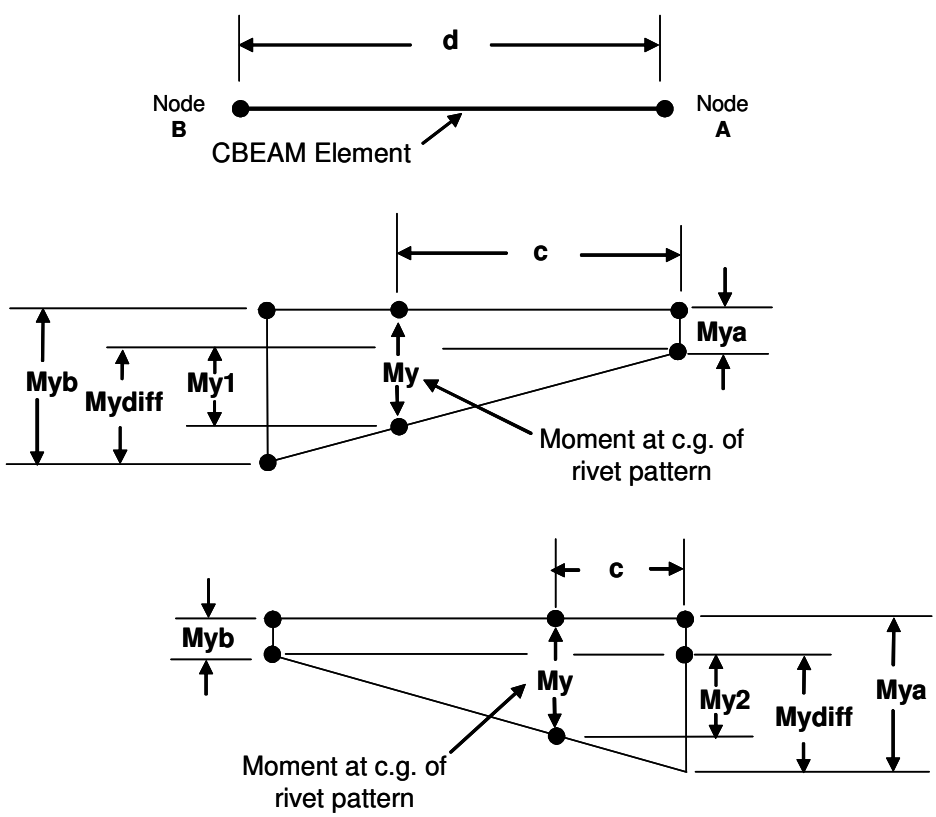

Free Body Diagram for Moment Distribution for My Interpolation
(Note: Similar moment distribution is used for Mz interpolation.)

Load in Rivets at Diagonal Sill Bracket:

Total Number of rivets in beam end:

$Nsps := 44$

Number of rivets reacting Fz shear load:

$psz := 20$

Number of rivets reacting Fy shear loads:

$psy := 24$

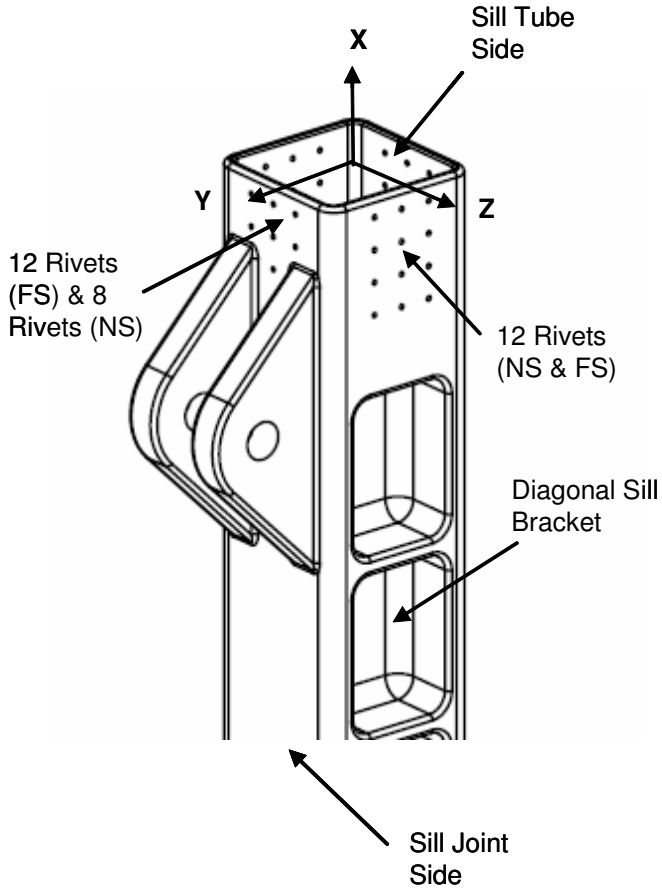

Shear load/rivet due to Fy $\quad Fsry := \frac{Fya}{psy} \quad max(Fsry) = 17.9 \cdot lbf$

Shear load/rivet due to Fz $\quad Fsrz := \frac{Fza}{psz} \quad max(Fsrz) = 33.9 \cdot lbf$

Note: The Fya and Fza forces have the same magnitude as the Fyb and Fzb forces. The end A forces are used above.

Shear flow due to torsion (Ref. Bruhn section A6.8) $\quad Fsrt := \frac{Mxa}{2 \cdot Am} \quad max(Fsrt) = 17.6 \cdot \frac{lbf}{in}$

Note: The shear load (Fsrt) is used to calculate the torsional load (Psrt) in the rivet due to the pitch on the rivet pattern. See Figure 2.5.1.4-2.

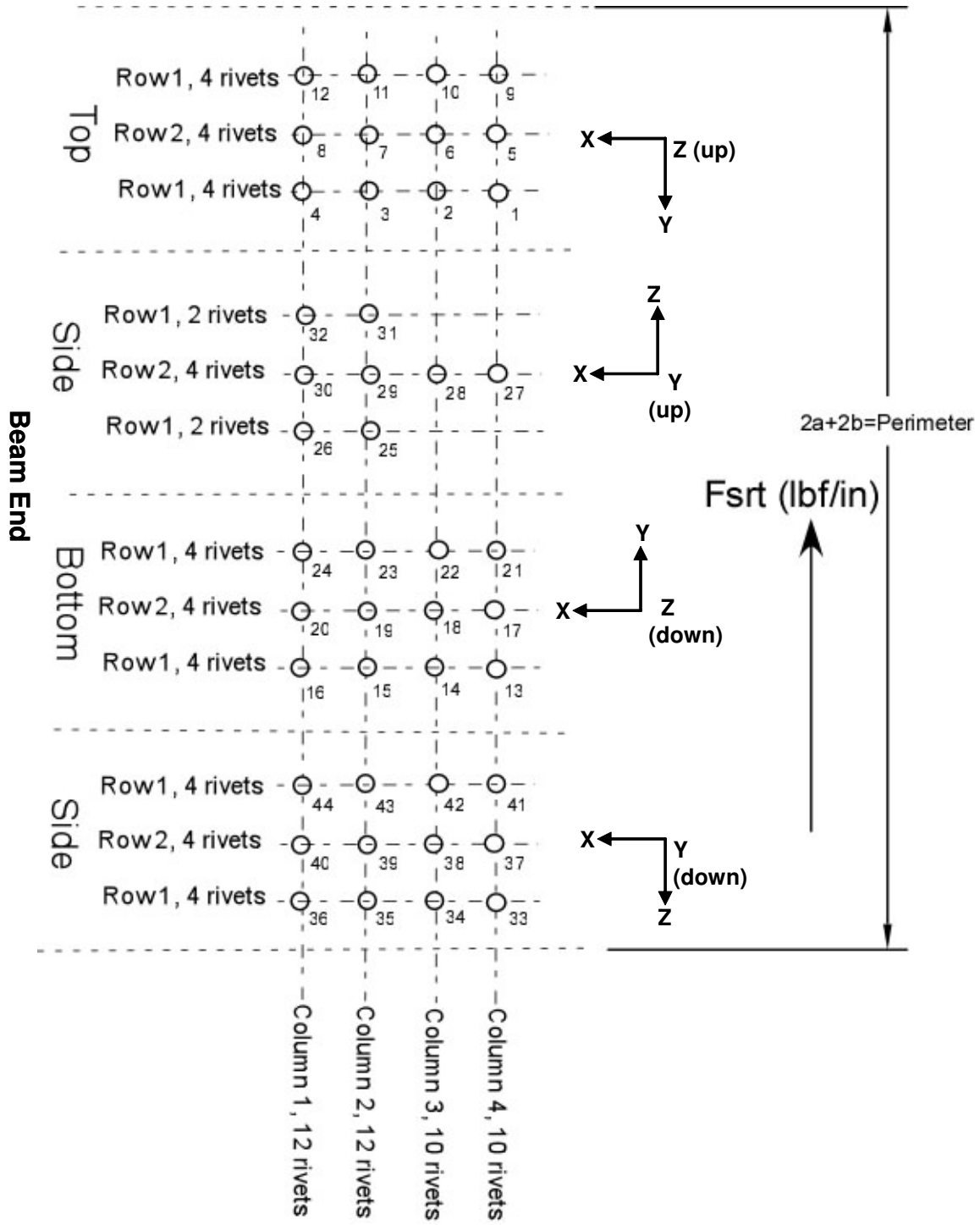

Figure 2.5.1.4-2 Layout of Rivet Patterns used to Calculate Rivet Pitch for Torsional Load

Calculation of Rivet Pitch:

It is assumed that all rivets share the torsion load equally. Therefore, each column of rivets has the same maximum load per rivet due to torsion.

Perimeter of rivet pattern $per := 2 \cdot a + 2 \cdot b$ $per = 16 \cdot in$

Loads in rivet due to torsion $Psrt := Fsrt \cdot \left(\frac{per}{Nsps} \right)$ $\max(Psrt) = 6.4 \cdot lbf$

Shear load in rivets due to beam axial load $Prta := \frac{Fxa}{Nsps}$ $\max(Prta) = 113.6 \cdot lbf$

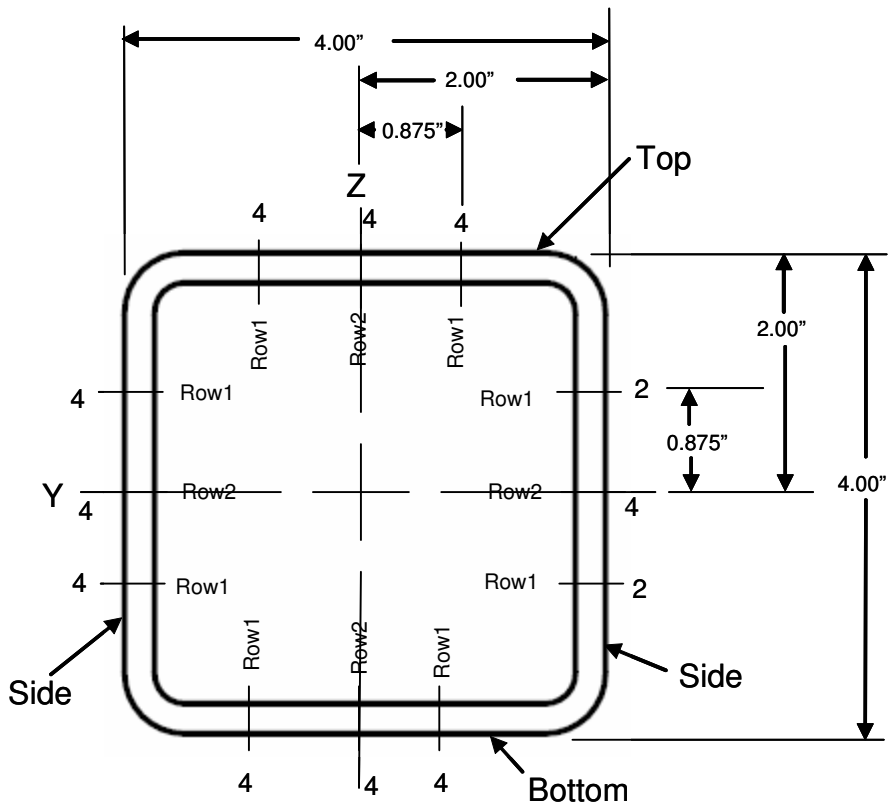

Rivet Dimension Variables:
(Ref. SDG39135738)

$z1 := .875 \cdot in$

$z2 := 2.00 \cdot in$

$z3 := 4.00 \cdot in$

$y1 := .875 \cdot in$

$y2 := 2.00 \cdot in$

$y3 := 4.00 \cdot in$

Note: Figure is for reference only.

Eccentrically Loaded Rivets due to My and Mz Moments:

Rivet Coordinate System Data

$j := 1 .. rows(coord)$ Counter for Coordinate Points

$x_j := coord_{j,2}$ Rivet Coordinate Points for x-direction

$y_j := coord_{j,3}$ Rivet Coordinate Points for y-direction

$z_j := coord_{j,4}$ Rivet Coordinate Points for z-direction

$$rivet_counter_j := \frac{coord_{j,1}}{in}$$

For Moment My:

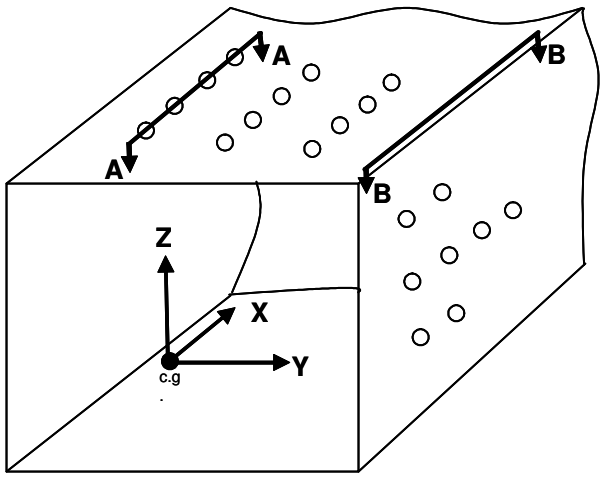

Eccentrically Loaded Rivet Pattern about My

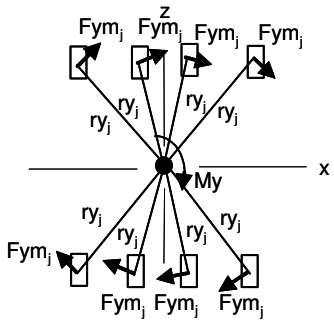

Cross-Section A-A

(Row 1and Row 2, 8 rivets ea.)

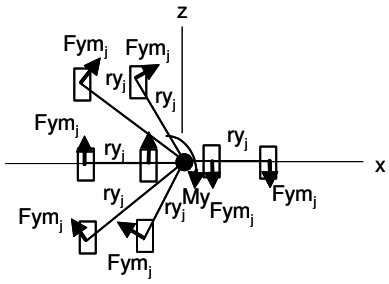

Cross-Section B-B

(Represents both sides, 8 rivets,

12 rivets FS)

Note: Figure is for reference only.

$$ry_j := \left[\left(x_j\right)^2 + \left(z_j\right)^2\right]^{\frac{1}{2}}$$

Radial distance to each rivet from the centroid of the rivet pattern

$$sigry := \sum_{j=1}^{rows(coord)} \left(ry_j\right)^2$$

Sum of the radial directions for all rivets in the rivet pattern

$$\beta y_j := atan2\left(x_j, z_j\right)$$

Angle between resultant vector
and tension or shear vectors

(Note: The angle θ is defined off of the x-axis.
See below.)

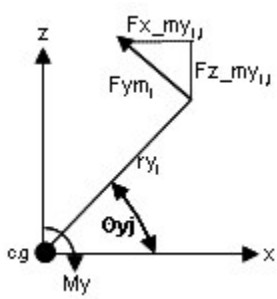

$$My_{1,1} = 2016.9 \cdot in \cdot lbf$$

$$Fym_{i,j} := \frac{-My_i \cdot ry_j}{sigry}$$

Resultant Load at
Each Rivet

$$Fz_my_{i,j} := Fym_{i,j} \cdot \sin\left(\frac{u}{2} - \beta y_j\right)$$

z - component of Fym

$$Fx_my_{i,j} := Fym_{i,j} \cdot -\cos\left(\frac{u}{2} - \beta y_j\right)$$

x - component of Fym

Prepared By	B. Dyer	04/24/06	Engineering and Science Contract Group *Structural Analysis Section*	File Name diagStoStube.mcd
Revised By	G. Reyes	06/23/09		
Checked By	C. Bala			Draw ing No. SEG39135726
Title	Diagonal Sill Bracket to Sill Tube Rivet Analysis			

For Moment Mz:

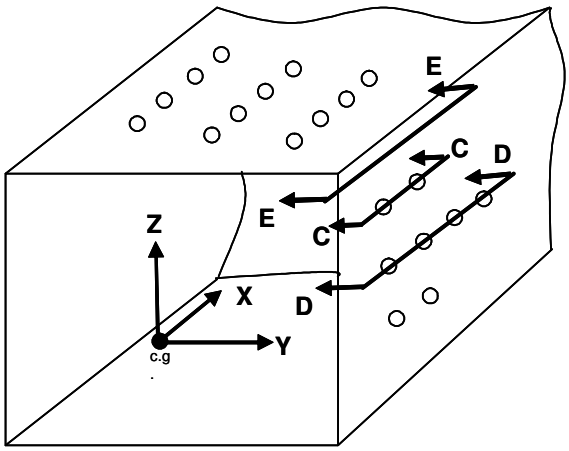

Eccentrically Loaded Rivet Pattern about Mz

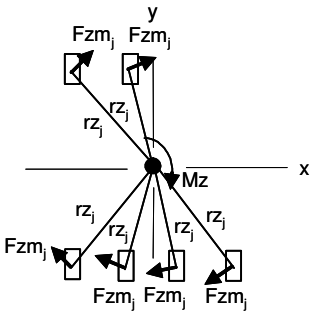

Cross-Section C-C

(Row 1, 6 rivets ea.)

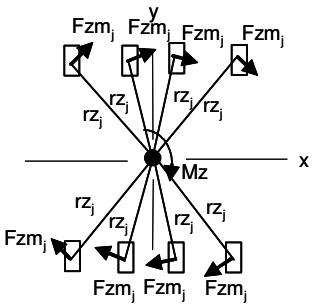

Cross-Section D-D

(Row 2, 8 rivets ea.)

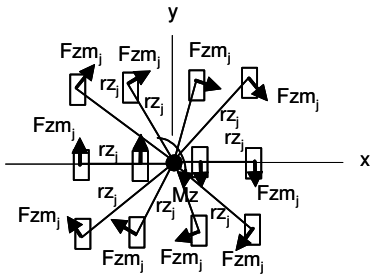

Cross-Section E-E

(Represents both sides, 24 rivets)

Note: Figure is for reference only.

$Mz_i := Mz_i + (Fxa_i \cdot ycg)$ Radial distance to each rivet from the centroid of the rivet pattern

$rz_j := \left[(x_j)^2 + (y_j)^2\right]^{\frac{1}{2}}$ Sum of the radial directions for all rivets in the rivet pattern

$sigrz := \sum_{j=1}^{rows(coord)} (rz_j)^2$ Sum of the linear directions for all rivets in the rivet pattern

$\beta z_j := atan2(x_j, y_j)$ Angle between resultant vector and tension or shear vectors

$Fzm_{i,j} := \frac{Mz_i \cdot rz_j}{sigrz}$ Resultant Load at Each Rivet

(Note: The angle θ is defined off of the x-axis.
See below.)

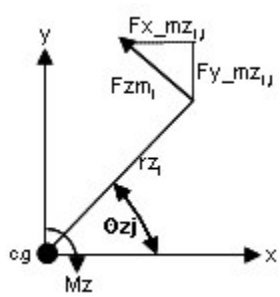

$Fy_mz_{i,j} := Fzm_{i,j} \cdot \sin\left(\frac{u}{2} - \beta z_j\right)$ y - component of Fzm

$Fx_mz_{i,j} := Fzm_{i,j} \cdot -\cos\left(\frac{u}{2} - \beta z_j\right)$ x - component of Fzm

$F_{i,j} := \begin{cases} Fz_my_{i,j} & \text{if } rivet_counter_j \le 24 \\ Fy_mz_{i,j} & \text{otherwise} \end{cases}$ Total Axial Load due to My and Mz Moments

$\max\left(\overrightarrow{|F|}\right) = 112.5 \cdot lbf$

Note: The axial loading is reacted by the beam and socket and not taken by the rivet. See section 2.1.11 for beam and socket analysis.

Total Rivet Shear Load:

$$Pt_{i,j} := \begin{cases} \sqrt{\left(Prta_i + Fx_my_{i,j} + Fx_mz_{i,j}\right)^2 + \left(Psrt_i + Fsry_i + Fy_mz_{i,j}\right)^2} & \text{if } j \le 24 \\ \sqrt{\left(Prta_i + Fx_my_{i,j} + Fx_mz_{i,j}\right)^2 + \left(Psrt_i + Fsrz_i + Fz_my_{i,j}\right)^2} & \text{otherwise} \end{cases} \qquad \max(Pt) = 319.9 \cdot lbf$$

Margin of safety for Total Rivet Load:

$$MS1t := \frac{Fs \cdot cf}{Pt \cdot FSu \cdot FF} - 1 \qquad \min(MS1t) = 2.75$$

(Note: Fitting Factor (FF) included for misalignment, different shim thicknesses, etc. ...)

The following will output an array for each row of rivets with element identity, load case, load, and margin of safety from left to right.

$$output := augment(ID, LC, MS1t)$$

$rows(output) = 384$ Number of rows in the "output" array

$cols(output) = 46$ Number of columns in the "output" array

The "output" array is then searched for the location of the minimum margin. The match function is used to locate the minimum margin of safety and the element identity, load case, rivet location, and maximum load are pulled from the array.

$$match(\min(MS1t), MS1t) = \begin{bmatrix} 32 \\ 4 \end{bmatrix}$$

$min_LC := output_{32,2}$ Load Case for Minimum Margin of Safety

$min_ID := output_{32,1}$ Element ID for Minimum Margin of Safety

Rivet number 4 is the rivet with the minimum margin of safety of 2.75.

Minimum Margin of Safety:

Minimum Margin of Safety	$\min(MS1t) = 2.75$
Element ID for Minimum Margin of Safety	$min_ID = 1712$
Load Case for Minimum Margin of Safety	$min_LC = 1016$
Maximum Rivet Load for Minimum Margin of Safety	$\max(Pt) = 319.9 \cdot lbf$
Rivets with Minimum Margin of Safety	Rivet numbers 4 (See figure 2.5.1.4 - 2 for rivet location)

Bearing on Hole Wall:

Hole diameter $dh := 0.257 \cdot in$ (Ref. SEG39135726, Flag Note 2)

Tube thickness $tp := 0.25 \cdot in$ (Ref. SDG39135739)

Bearing area $Ab := dh \cdot tp$ $Ab = 0.064 \cdot in^2$

Max. load per rivet $max(Pt) = 319.9 \cdot lbf$

Max. bearing stress $b := \frac{max(Pt)}{Ab}$ $b = 4978.5 \cdot psi$

Margin of safety $MSb := \frac{Fbru \cdot cb}{b \cdot FSu \cdot FF} - 1$ $MSb = 12.66$

Shear tear out:

Edge distance $e := 0.520 \cdot in$ (Ref. SDG39135740)

Note: Using this e is conservative, since actual rivet force is in general at some angle.

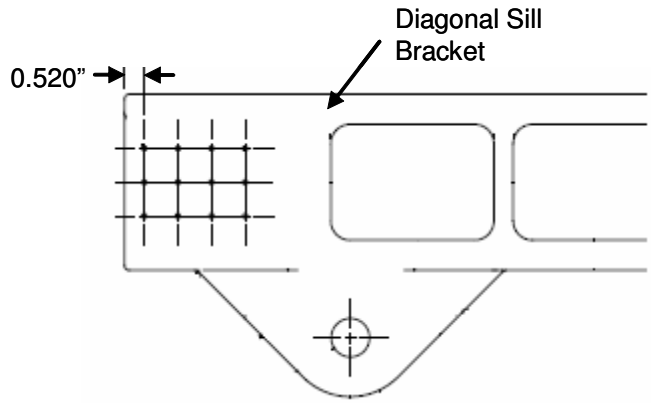

Hole diameter $dh := 0.257 \cdot in$

E over D ratio $\frac{e}{dh} = 2.023$

Tube thickness $tp := 0.25 \cdot in$

Shear out area $As := 2 \cdot \left(e - \frac{dh}{2} \cdot \cos(40 \cdot deg)\right) \cdot tp$ $As = 0.211 \cdot in^2$

Max. load per rivet $max(Pt) = 319.9 \cdot lbf$

Max. shear tear out stress $=s := \frac{max(Pt)}{As}$ $=s = 1517.5 \cdot psi$

Margin of safety $MSsh := \frac{Fsu \cdot cd}{=s \cdot FSu \cdot FF} - 1$ $MSsh = 13.18$

2.5.1.5 Diagonal Strut Tube to Diagonal Strut End Fitting

Prepared By	Name	Date		File Name
	Brent Dyer	05/02/06		diagstruttube.mcd
Checked By	C. Bala		**Engineering and Science Contract Group** *Structural Analysis Section*	Drawing No. SEG39135741
Title	Diagonal Strut Tube to Diagonal Strut Endfitting Rivet Analysis			

Diagonal Strut Tube to Diagonal Strut Endfitting Rivet Analysis

The diagonal strut tube SDG39135742 connects to the diagonal strut endfitting SDG39135743 on both ends of the tube. There are a total of two diagonal struts in the USS-02 assembly. The diagonal strut tube is fastened to the endfitting, with NAS1398M8, 0.25 in rivets. The diagonal strut endfitting is machined from 7075-T7351 bar and the diagonal strut tube is extruded from 6061-T6511. CBEAM elements 1801 and 1803 in the loads model represents the portion of the diagonal strut tube that interfaces with the diagonal strut endfitting.

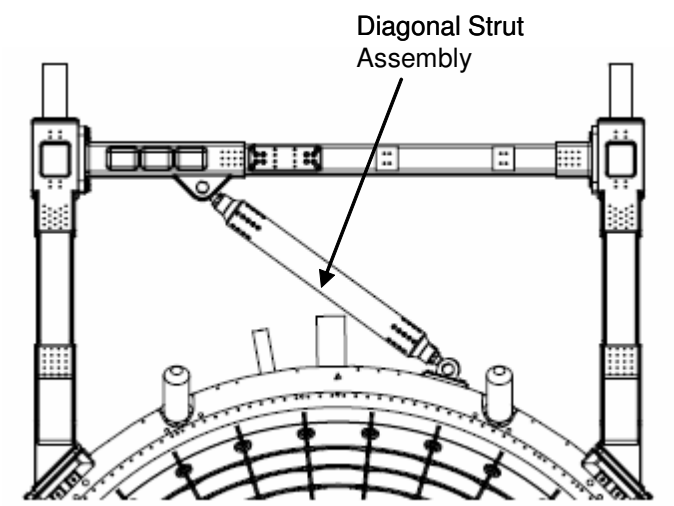

Material Strength for Rivets:

Rivets are NAS1398 type M, 0.25 in. blind protruding head Monel rivets

(Ref. NAS1400, sheet 5)

Max. rivet shear strength $Fs := 2840 \cdot lbf$

Material Strength for Diagonal Strut Tube:

Tube material is extruded 6061-T6511 with e/D=2.0

(Ref. MIL-HDBK-5J, Table 3.6.2.0(g))

Allowable bearing strength $Fbru := 82000 \cdot psi$

Allowable shear strength $Fsu := 26000 \cdot psi$

Factors of safety:

Ultimate Factor of Safety: $FSu := 1.4$

Fitting Factor: $FF := 1.15$

Temperature:

Maximum Temperature $Tmax := 150 \cdot deg$

(Ref. Appendix C2, AMS-02 Temperature Table)

Temperature Correction Factor (For Fs) $cf := .98$

(Ref. Appendix C5)

Temperature Correction Factor (For Fsu) $cd := .94$

(Ref. MIL-HDBK-5J, Figure 3.6.2.2.1(a))

Temperature Correction Factor (For Fbru) $cb := .94$

(Ref. MIL-HDBK-5J, Figure 3.6.2.2.1(a))

Loads model 2-06 was run in NASTRAN for 192 load cases. Maximum axial beam element forces were recovered, and given in the data file "diagstrutloads.dat" for elements 1801 and 1803.

$data := READPRN("diagstrutloads.dat")$ $ORIGIN := 1$ $i := 1 .. rows(data)$

Loads from Beam End A:

Axial Load $Fxa_i := \left|data_{i,3}\right| \cdot lbf$ $\max(Fxa) = 34094.6\,lbf$

Load Case $LC_i := data_{i,2}$

Element ID $ID_i := data_{i,1}$

Number of Rivets:

Total Number of rivets in beam:

$Nsps := 54$

Number of rivets reacting Fx axial load in beam end:

$psx := 27$

Total Rivet Shear Load:

The Fxa axial load is distributed equally to all 27 rivets in the beam end.

Shear load/rivet due to Fxa $Pt := \frac{\overrightarrow{\left|Fxa\right|}}{psx}$ $\max(Pt) = 1262.8\,lbf$

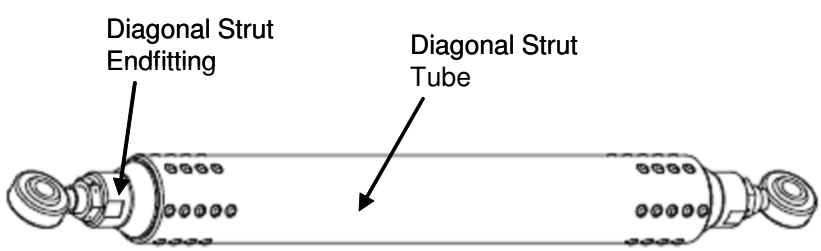

Margin of safety for Total Rivet Load:

$$MS1t := \frac{Fs \cdot cf}{Pt \cdot FSu \cdot FF} - 1$$

$min(MS1t) = 0.37$

(Note: Fitting Factor (FF) included for misalignment, different shim thicknesses, etc. ...)

The following will output an array for each row of rivets with element identity, load case, load, and margin of safety from left to right.

$output := augment(ID, LC, MS1t)$

$rows(output) = 9$ Number of rows in the "output" array

$cols(output) = 3$ Number of columns in the "output" array

The "output" array is then searched for the location of the minimum margin. The match function is used to locate the minimum margin of safety and the element identity, load case, rivet location, and maximum load are pulled from the array.

$min_LC := output_{9,2}$ Load Case for Minimum Margin of Safety

$match(min(MS1t), MS1t) = (9)$

$min_ID := output_{9,1}$ Element ID for Minimum Margin of Safety

Minimum Margin of Safety Summary:

Minimum Margin of Safety	$min(MS1t) = 0.37$
Element ID for Minimum Margin of Safety	$min_ID = 1803$
Load Case for Minimum Margin of Safety	$min_LC = 1020$
Maximum Rivet Load for Minimum Margin of Safety	$max(Pt) = 1262.8\,lbf$

Bearing on Hole Wall:

Hole diameter $dh := 0.257 \cdot in$ (Ref. SEG39135726, Flag Note 2)

Tube thickness (with counterbore) $tp := 0.174 \cdot in$ (Ref. SDG39135742)

Bearing area $Ab := dh \cdot tp$ $Ab = 0.045\,in^2$

Max. load per rivet $max(Pt) = 1262.8\,lbf$

Max. bearing stress $\beta b := \frac{max(Pt)}{Ab}$ $\beta b = 28238.4\,psi$

Margin of safety $MSb := \frac{Fbru \cdot cb}{\beta b \cdot FSu \cdot FF} - 1$ $MSb = 0.70$

Shear tear out:

Edge distance $e := 0.520 \cdot in$ (Ref. SDG39135742)

Note: Using this e is conservative, since actual rivet force is in general at some angle.

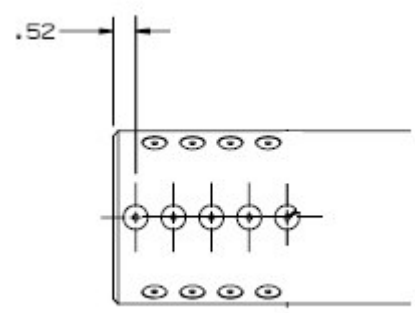

Hole diameter $dh := 0.257 \cdot in$

E over D ratio $\frac{e}{dh} = 2.023$

Tube thickness $tp := 0.25 \cdot in$

Shear out area $As := 2 \cdot \left(e - \frac{dh}{2} \cdot \cos(40 \cdot deg)\right) \cdot tp$ $As = 0.211\,in^2$

Max. load per rivet $max(Pt) = 1262.8\,lbf$

Max. shear tear out stress $us := \frac{max(Pt)}{As}$ $us = 5990.9\,psi$

Margin of safety $MSsh := \frac{Fsu \cdot cd}{us \cdot FSu \cdot FF} - 1$ $MSsh = 1.53$

2.5.1.6 Upper Trunnion Bridge Beam to Sill Joint

Upper Trunnion Bridge Beam to Sill Joint Rivet Analysis

The Upper Trunnion Bridge Beam SDG39135728 connects to the Sill Joint SDG39135730 in 4 locations. The upper bridge beam is fastened to the sill joint, with NAS1398M8, 0.25 in rivets. The sill joint is machined from 7050-T7451 plate and the upper trunnion bridge beam is extruded from 7075-T73511. CBEAM elements 1113, 1114, 1115, and 1116 in the loads model represents the portion of the sill joint that interfaces with the bridge beam. The rivet pattern centroid is 2.989 in from end A of the beam element. Element length is 4.977 in. See Appendix C4 for AMS Rivet Pattern Location Table.

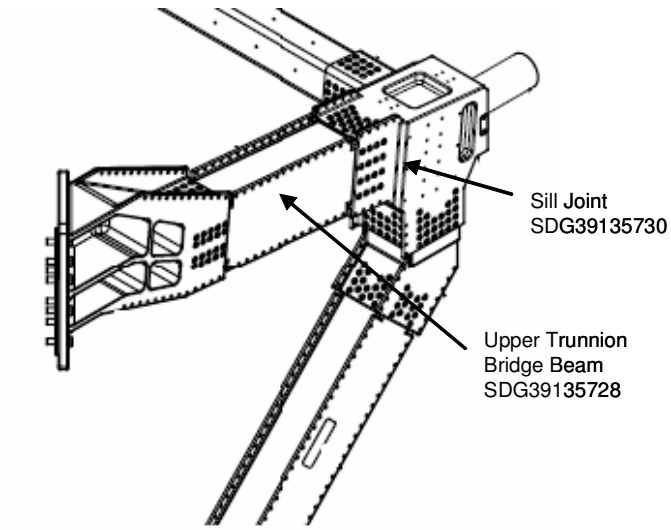

Material Strength for Rivets:

Rivets are NAS1398 type M, 0.25 in. blind protruding head Monel rivets

(Ref. NAS1400, sheet 5)

Max. rivet shear strength $Fs := 2840 \cdot lbf$

Material Strength for Upper Trunnion Bridge Beam:

Tube material is extruded 7075-T73511 with e/D=2.0

(Ref. MIL-HDBK-5J, Table 3.7.6.0(g2))

Allowable bearing strength $Fbru := 119000 \cdot psi$

Allowable shear strength $Fsu := 35000 \cdot psi$

Factors of safety:

Ultimate Factor of Safety: $FSu := 1.4$

Fitting Factor: $FF := 1.15$

Temperature:

Maximum Temperature $Tmax := 150 \cdot deg$

(Ref. Appendix C2, AMS-02 Temperature Table)

Temperature Correction Factor (For Fs) $cf := .98$

(Ref. Appendix C5)

Temperature Correction Factor (For Fsu) $cd := .99$

(Ref. MIL-HDBK-5J, Figure 3.7.6.1.2(b))

Temperature Correction Factor (For Fbru) $cb := .92$

(Ref. MIL-HDBK-5J, Figure 3.7.6.1(a))

Loads model 2-06 was run in NASTRAN for 192 load cases. Beam element forces were recovered, and given in the data file "UTBBtoTSillJoint.dat" for elements 1113, 1114, 1115, and 1116.

$data := READPRN(\text{"UTBBtoTSillJoint.dat"})$ $ORIGIN := 1$ $i := 1 .. rows(data)$

Loads from Beam End A:

Axial Load $Fxa_i := data_{i,7} \cdot lbf$

Shear in Y axis $Fya_i := data_{i,5} \cdot lbf$

Shear in Z axis $Fza_i := data_{i,6} \cdot lbf$

Torsion $Mxa_i := data_{i,8} \cdot in \cdot lbf$

Moment about Y axis $Mya_i := -data_{i,4} \cdot in \cdot lbf$

Moment about Z axis $Mza_i := data_{i,3} \cdot in \cdot lbf$

Loads from Beam End B:

Axial Load $Fxb_i := data_{i,13} \cdot lbf$

Shear in Y axis $Fyb_i := data_{i,11} \cdot lbf$

Shear in Z axis $Fzb_i := data_{i,12} \cdot lbf$

Torsion $Mxb_i := data_{i,14} \cdot in \cdot lbf$

Moment about Y axis $Myb_i := -data_{i,10} \cdot in \cdot lbf$

Moment about Z axis $Mzb_i := data_{i,9} \cdot in \cdot lbf$

$ID_i := data_{i,1}$ $LC_i := data_{i,2}$

Beam Section Properties:

Thickness of tube $t := 0.25 \cdot in$ (Ref. SDG39135728)

Width of tube $a := 5.062 \cdot in$ (Ref. SDG39135728)

Depth of tube $b := 6.312 \cdot in$ (Ref. SDG39135728)

Enclosed area of mean width and mean height $Am := (a - t) \cdot (b - t)$ $Am = 29.17 \cdot in^2$

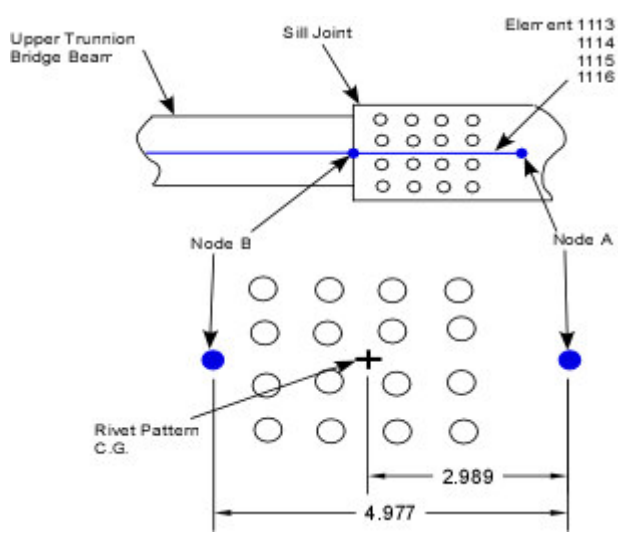

Figure 2.5.1.6-1 Rivet Pattern Dimensions for Beam Element Ends A and B.

Note: Figure is for reference only.

Bending Moment Interpolation:

NASTRAN gives beam moments at ends A and B of the beam element. The center of gravity of the rivet pattern falls between nodes A and B, therefore, the moment at the center of the rivet pattern needs to be interpolated.

Distance from end A to the center of the rivet pattern $c := 2.989 \cdot in$

Total length of beam element $d := 4.977 \cdot in$

(See Figure 2.5.1.6-1 and Ref. Appendix C4)

Moment My:

Difference $Mydiff_i := (Mya_i - Myb_i)$

Linearly interpolate at centroid of rivets

$My1 := \frac{c}{d} \cdot Mydiff \quad My2 := \frac{d-c}{d} \cdot Mydiff$

Moment My interpolated at centroid of rivets

$My := Myb + My2$

Moment Mz:

Difference $Mzdiff_i := (Mza_i - Mzb_i)$

Linearly interpolate at centroid of rivets

$Mz1 := \frac{c}{d} \cdot Mzdiff \quad Mz2 := \frac{d-c}{d} \cdot Mzdiff$

Moment Mz interpolated at centroid of rivets

$Mz := Mzb + Mz2$

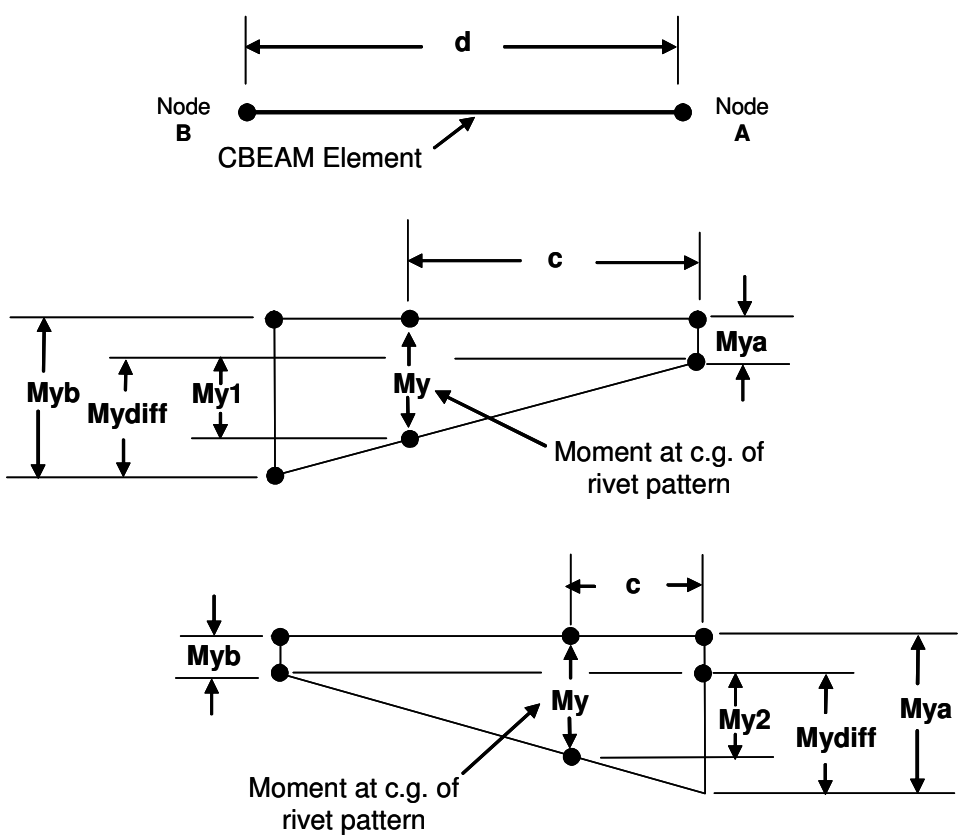

Free Body Diagram for Moment Distribution for My Interpolation
(Note: Similar moment distribution is used for Mz interpolation.)

Load in Rivets at Upper Bridge Beam to Sill Joint:

Total Number of rivets in beam end:

$Nsps := 70$

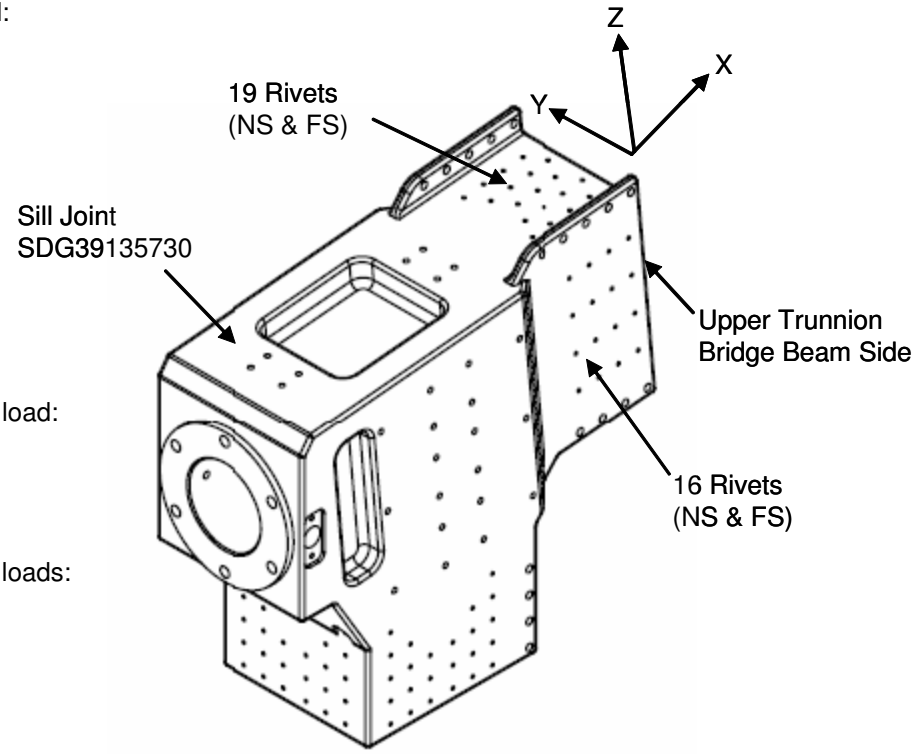

Number of rivets reacting Fz shear load:

$psz := 32$

Number of rivets reacting Fy shear loads:

$psy := 38$

Shear load/rivet due to Fy $\quad Fsry := \frac{Fya}{psy} \quad \max(Fsry) = 80 \cdot lbf$

Shear load/rivet due to Fz $\quad Fsrz := \frac{Fza}{psz} \quad \max(Fsrz) = 227.1 \cdot lbf$

Note: The Fya and Fza forces have the same magnitude as the Fyb and Fzb forces. The end A forces are used above.

Shear flow due to torsion
(Ref. Bruhn section A6.8) $\quad Fsrt := \frac{Mxa}{2 \cdot Am} \quad \max(Fsrt) = 787.6 \cdot \frac{lbf}{in}$

Note: The shear load (Fsrt) is used to calculate the torsional load (Psrt) in the rivet due to the pitch on the rivet pattern. See Figure 2.5.1.6-2.

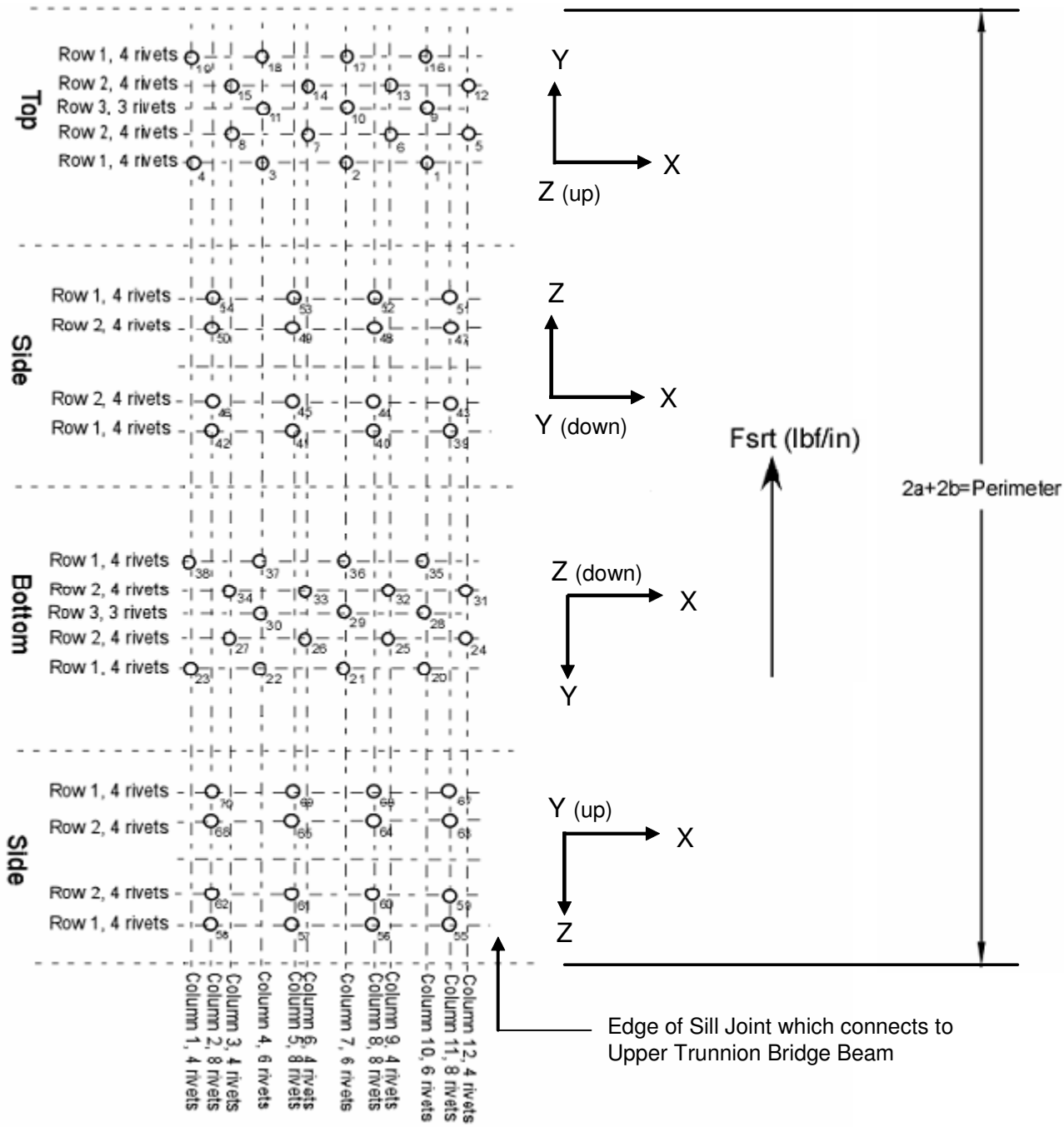

Figure 2.5.1.6-2 Layout of Rivet Patterns used to Calculate Rivet Pitch for Torsional Load

Calculation of Rivet Pitch:

It is assumed that all rivets share the torsion load equally. Therefore, each column of rivets has the same maximum load per rivet due to torsion.

Perimeter of rivet pattern $per := 2 \cdot a + 2 \cdot b$ $per = 22.7 \cdot in$

Loads in rivet due to torsion $Psrt := Fsrt \cdot \left(\frac{per}{Nsps} \right)$ $\max(Psrt) = 256 \cdot lbf$

Shear load in rivets due to beam axial load $Prta := \frac{Fxa}{Nsps}$ $\max(Prta) = 521.7 \cdot lbf$

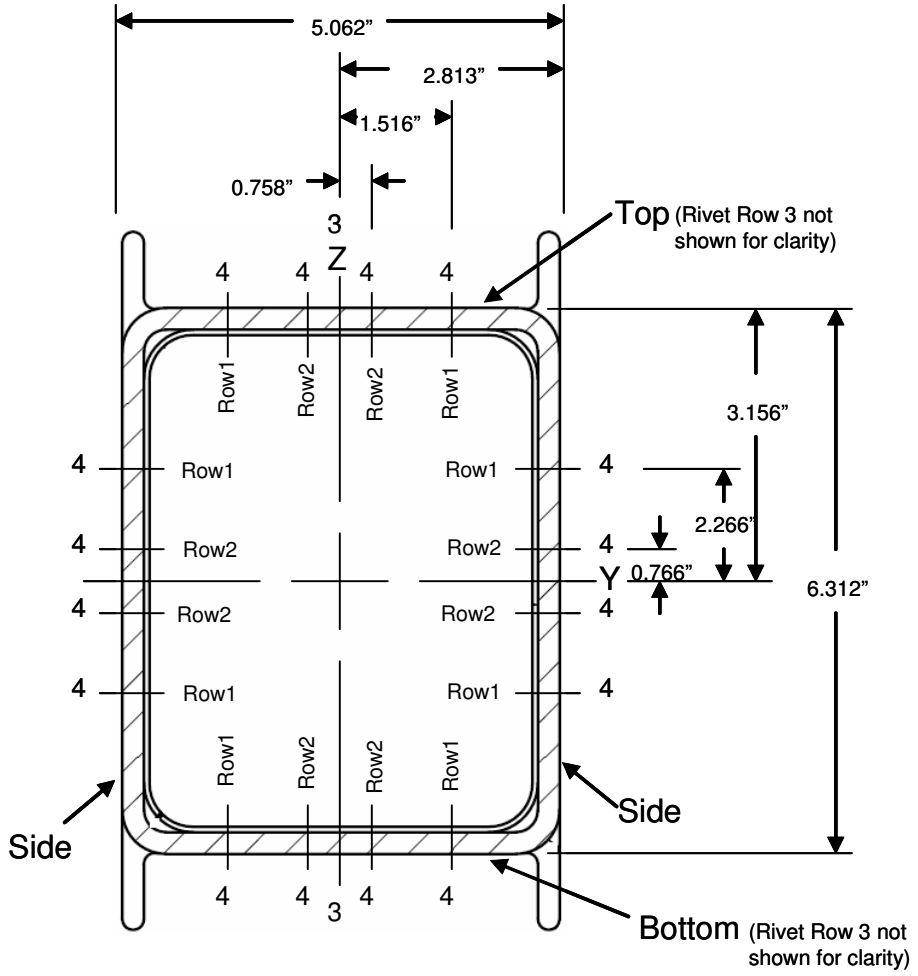

Note: Figure is for reference only.

Rivet Dimension Variables:
(Ref. SDG39135730)

$z1 := .766 \cdot in$

$z2 := 2.266 \cdot in$

$z3 := 3.156 \cdot in$

$y1 := .758 \cdot in$

$y2 := 1.516 \cdot in$

$y3 := 2.813 \cdot in$

Eccentrically Loaded Rivets due to My and Mz Moments:

Rivet Coordinate System Data

$j := 1 .. rows(coord)$ Counter for Coordinate Points

$x_j := coord_{j,2}$ Rivet Coordinate Points for x-direction

$y_j := coord_{j,3}$ Rivet Coordinate Points for y-direction

$z_j := coord_{j,4}$ Rivet Coordinate Points for z-direction

$$rivet_counter_j := \frac{coord_{j,1}}{in}$$

For Moment My:

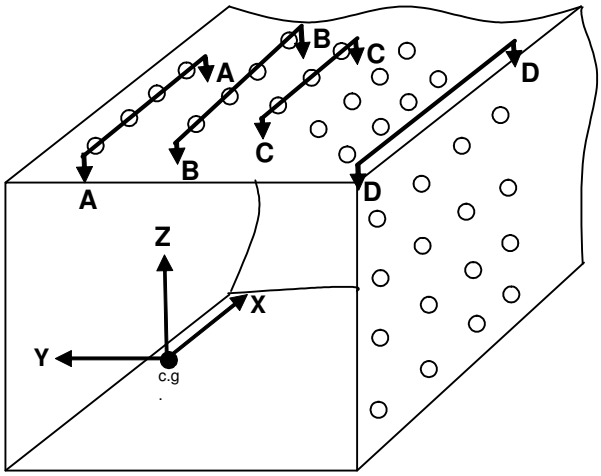

Eccentrically Loaded Rivet Pattern about My

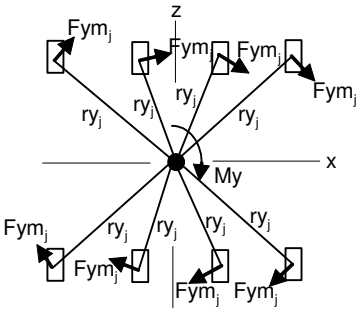

Cross-Section A-A

(Row 1, 16 rivets)

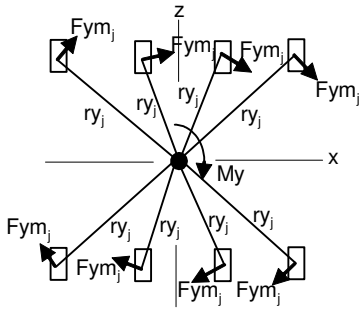

Cross-Section B-B

(Row 2, 16 rivets)

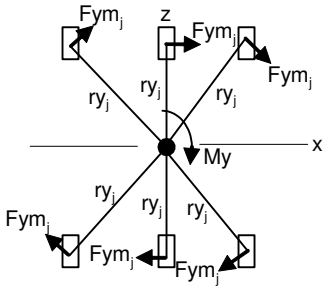

Cross-Section C-C

(Row 3, 6 rivets)

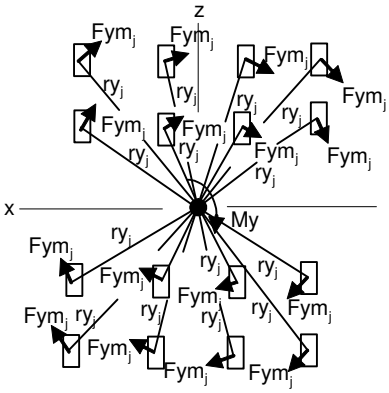

Cross-Section D-D

(Represents both sides, 32 rivets)

Note: Figure is for reference only.

$$ry_j := \left[\left(x_j\right)^2 + \left(z_j\right)^2\right]^{\frac{1}{2}}$$

Radial distance to each rivet from the centroid of the rivet pattern

$$sigry := \sum_{j=1}^{rows(coord)} \left(ry_j\right)^2$$

Sum of the radial directions for all rivets in the rivet pattern

$$\beta y_j := atan2\left(x_j, z_j\right)$$

Angle between resultant vector
and tension or shear vectors

(Note: The angle θ is defined off of the x-axis.
See below.)

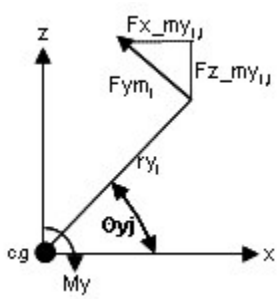

$$Fym_{i,j} := \frac{-My_i \cdot ry_j}{sigry}$$

Resultant Load at
Each Rivet

$$Fz_my_{i,j} := Fym_{i,j} \cdot \sin\left(\frac{u}{2} - \beta y_j\right)$$

z - component of Fym

$$Fx_my_{i,j} := Fym_{i,j} \cdot -\cos\left(\frac{u}{2} - \beta y_j\right)$$

x - component of Fym

For Moment Mz:

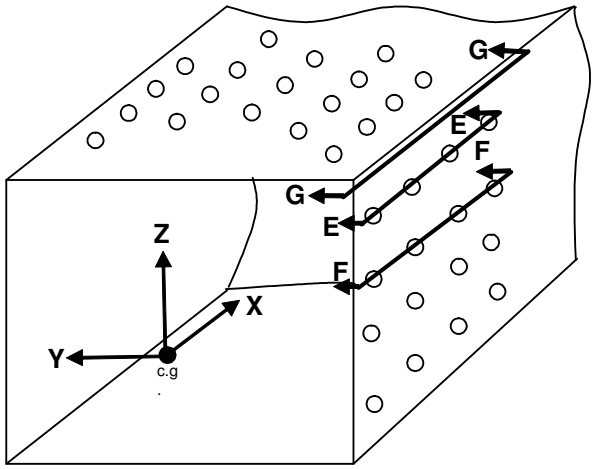

Eccentrically Loaded Rivet Pattern about Mz

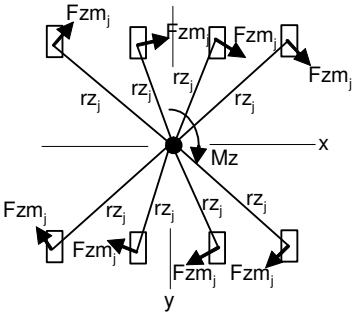

Cross-Section E-E

(Row 1, 16 rivets)

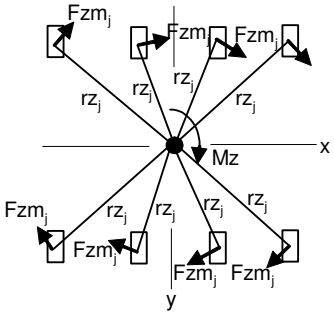

Cross-Section F-F

(Row 2, 16 rivets)

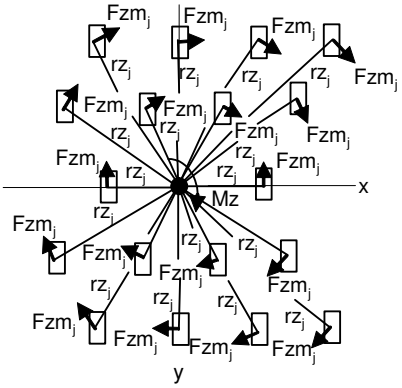

Cross-Section G-G

(Represents top and bottom, 38 rivets)

Note: Figure is for reference only.

$$rz_j := \left[\left(x_j\right)^2 + \left(y_j\right)^2\right]^{\frac{1}{2}}$$

Radial distance to each rivet from the centroid of the rivet pattern

$$sigrz := \sum_{j=1}^{rows(coord)} \left(rz_j\right)^2$$

Sum of the radial directions for all rivets in the rivet pattern

$$\beta z_j := atan2\left(x_j, y_j\right)$$

Angle between resultant vector and tension or shear vectors

$$Fzm_{i,j} := \frac{Mz_i \cdot rz_j}{sigrz}$$

Resultant Load at Each Rivet

(Note: The angle θ is defined off of the x-axis.
See below.)

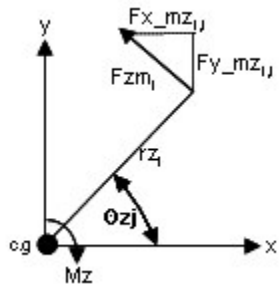

$$Mz_{1,1} = -43240.7 \cdot in \cdot lbf$$

$$Fy_mz_{i,j} := Fzm_{i,j} \cdot \sin\left(\frac{u}{2} - \beta z_j\right)$$

y - component of Fzm

$$Fy_mz_{1,19} = 188.7 \cdot lbf$$

$$Fx_mz_{i,j} := Fzm_{i,j} \cdot -\cos\left(\frac{u}{2} - \beta z_j\right)$$

x - component of Fzm

$$Fx_mz_{1,19} = 179.4 \cdot lbf$$

$$F_{i,j} := \begin{cases} Fz_my_{i,j} & \text{if } rivet_counter_j \le 38 \\ Fy_mz_{i,j} & \text{otherwise} \end{cases}$$

Total Axial Load due to My and Mz Moments

$$\max\left(\overrightarrow{|F|}\right) = 256.6 \cdot lbf$$

Note: The axial loading is reacted by the beam and socket and not taken by the rivet. See section 2.1.2 for beam and socket analysis.

Total Rivet Shear Load:

$$Pt_{i,j} := \begin{cases} \sqrt{\left(Prta_i + Fx_my_{i,j} + Fx_mz_{i,j}\right)^2 + \left(Psrt_i + Fsry_i + Fy_mz_{i,j}\right)^2} & \text{if } j \le 38 \\ \sqrt{\left(Prta_i + Fx_my_{i,j} + Fx_mz_{i,j}\right)^2 + \left(Psrt_i + Fsrz_i + Fz_my_{i,j}\right)^2} & \text{otherwise} \end{cases}$$

$$\max(Pt) = 1355.6 \cdot lbf$$

Margin of safety for Total Rivet Load:

$$MS1t := \frac{Fs \cdot cf}{Pt \cdot FSu \cdot FF} - 1$$

$$\min(MS1t) = 0.275$$

(Note: Fitting Factor (FF) included for misalignment, different shim thicknesses, etc. ...)

The following will output an array for each row of rivets with element identity, load case, load, and margin of safety from left to right.

$$output := augment(ID, LC, MS1t)$$

$rows(output) = 768$ Number of rows in the "output" array

$cols(output) = 72$ Number of columns in the "output" array

The "output" array is then searched for the location of the minimum margin. The match function is used to locate the minimum margin of safety and the element identity, load case, rivet location, and maximum load are pulled from the array.

$$match(\min(MS1t), MS1t) = \begin{bmatrix} 573 \\ 4 \end{bmatrix}$$

$min_LC := output_{573,2}$ Load Case for Minimum Margin of Safety

$min_ID := output_{573,1}$ Element ID for Minimum Margin of Safety

Rivet number 4 is the rivet with the minimum margin of safety of 0.275.

Minimum Margin of Safety:

Minimum Margin of Safety	$\min(MS1t) = 0.275$
Element ID for Minimum Margin of Safety	$min_ID = 1113$
Load Case for Minimum Margin of Safety	$min_LC = 4016$
Maximum Rivet Load for Minimum Margin of Safety	$\max(Pt) = 1355.6 \cdot lbf$
Rivets with Minimum Margin of Safety	Rivet number 4 (See figure 2.5.1.6 - 6 for rivet location)

Bearing on Hole Wall:

Hole diameter $dh := 0.257 \cdot in$ (Ref. SEG39135726, Flag Note 2)

Tube thickness $tp := 0.25 \cdot in$ (Ref. SDG39135728)

Bearing area $Ab := dh \cdot tp$ $Ab = 0.06425 \cdot in^2$

Max. load per rivet $\max(Pt) = 1355.6 \cdot lbf$

Max. bearing stress $b := \frac{\max(Pt)}{Ab}$ $b = 21098.2 \cdot psi$

Margin of safety $MSb := \frac{Fbru \cdot cb}{b \cdot FSu \cdot FF} - 1$ $MSb = 2.22$

Shear tear out:

Edge distance $e := 0.520 \cdot in$ (Ref. SDG39135730)

Note: Using this e is conservative, since actual rivet force is in general at some angle.

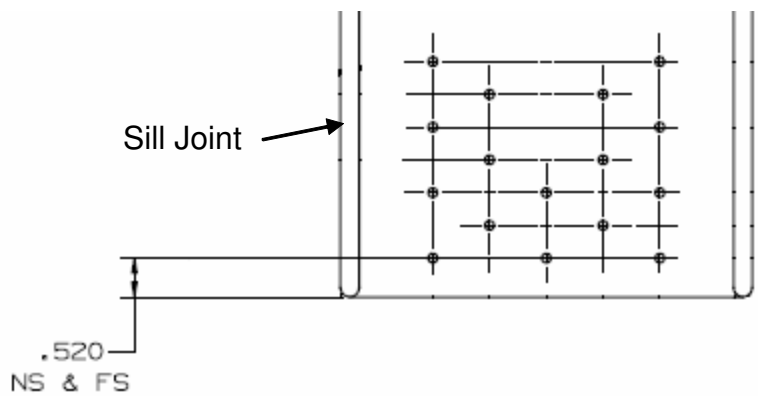

Hole diameter $dh := 0.257 \cdot in$

E over D ratio $\frac{e}{dh} = 2.023$

Tube thickness $tp := 0.25 \cdot in$

Shear out area $As := 2 \cdot \left(e - \frac{dh}{2} \cdot \cos(40 \cdot deg) \right) \cdot tp$ $As = 0.2108 \cdot in^2$

Max. load per rivet $\max(Pt) = 1355.6 \cdot lbf$

Max. shear tear out stress $=s := \frac{\max(Pt)}{As}$ $=s = 6431.1 \cdot psi$

Margin of safety $MSsh := \frac{Fsu \cdot cd}{=s \cdot FSu \cdot FF} - 1$ $MSsh = 2.347$

2.5.1.7 Lower Trunnion Bridge Beam to Lower Trunnion Bridge Beam Elbow

Lower Trunnion Bridge Beam to Lower Trunnion Bridge Beam Elbow Rivet Analysis

The elbow joint SDG39135734 connects the sill joint SDG39135730 to the lower trunnion bridge beam, SDG39135735 in 4 locations. The lower end of the elbow joint is fastened to the lower trunnion bridge, with NAS1398M8, 0.25 in rivets. The elbow joint is machined from 7050-T7451 plate and the lower trunnion bridge beam is extruded from 7075-T73511. CBEAM elements 1221, 1222, 1223, and 1224 in the loads model represents the portion of the elbow joint that interfaces with the bridge beam. The rivet pattern centroid is 4.484 in from end A of the beam element. Element length is 6.316 in. See Appendix C4 for AMS Rivet Pattern Location Table.

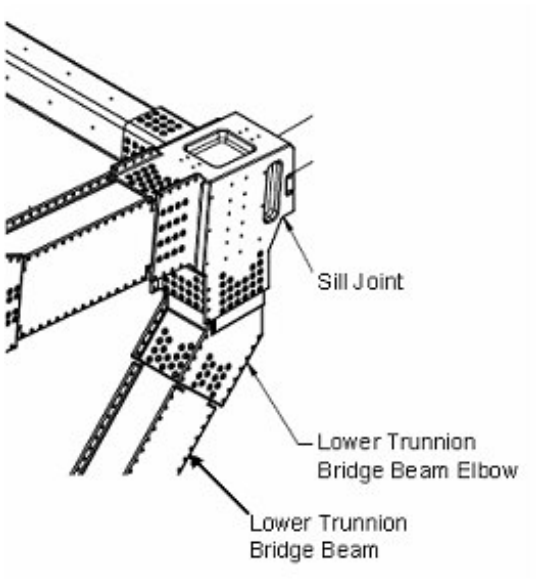

Material Strength for Rivets:

Rivets are NAS1398 type M, 0.25 in. blind protruding head Monel rivets

(Ref. NAS1400, sheet 5)

Max. rivet shear strength $Fs := 2840 \cdot lbf$

Material Strength for Lower Trunnion Bridge Beam:

Tube material is extruded 7075-T73511 with e/D=2.0

(Ref. MIL-HDBK-5J, Table 3.7.6.0(g2))

Allowable bearing strength $Fbru := 119000 \cdot psi$

Allowable shear strength $Fsu := 35000 \cdot psi$

Factors of safety:

Ultimate Factor of Safety: $FSu := 1.4$

Fitting Factor: $FF := 1.15$

Temperature:

Maximum Temperature $Tmax := 150 \cdot deg$

(Ref. Appendix C2, AMS-02 Temperature Table)

Temperature Correction Factor (For Fs) $cf := .98$

(Ref. Appendix C5)

Temperature Correction Factor (For Fsu) $cd := .99$

(Ref. MIL-HDBK-5J, Figure 3.7.6.1.2(b))

Temperature Correction Factor (For Fbru) $cb := .92$

(Ref. MIL-HDBK-5J, Figure 3.7.6.1(a))

Loads model 2-06 was run in NASTRAN for 192 load cases. Beam element forces were recovered, and given in the data file "ElbowtoLTBB.dat" for elements 1221, 1222, 1223, and 1224.

$data := READPRN(\text{"ElbowtoLTBB.dat"})$ $ORIGIN := 1$ $i := 1 .. rows(data)$

Loads from Beam End A:

Axial Load $Fxa_i := data_{i,7} \cdot lbf$

Shear in Y axis $Fya_i := data_{i,5} \cdot lbf$

Shear in Z axis $Fza_i := data_{i,6} \cdot lbf$

Torsion $Mxa_i := data_{i,8} \cdot in \cdot lbf$

Moment about Y axis $Mya_i := -data_{i,4} \cdot in \cdot lbf$

Moment about Z axis $Mza_i := data_{i,3} \cdot in \cdot lbf$

$ID_i := data_{i,1}$ $LC_i := data_{i,2}$

Loads from Beam End B:

Axial Load $Fxb_i := data_{i,13} \cdot lbf$

Shear in Y axis $Fyb_i := data_{i,11} \cdot lbf$

Shear in Z axis $Fzb_i := data_{i,12} \cdot lbf$

Torsion $Mxb_i := data_{i,14} \cdot in \cdot lbf$

Moment about Y axis $Myb_i := -data_{i,10} \cdot in \cdot lbf$

Moment about Z axis $Mzb_i := data_{i,9} \cdot in \cdot lbf$

Beam Section Properties:

Thickness of tube $t := 0.25 \cdot in$ (Ref. SDG39135735)

Width of tube $a := 4.938 \cdot in$ (Ref. SDG39135735)

Depth of tube $b := 4.938 \cdot in$ (Ref. SDG39135735)

Enclosed area of mean width and mean height $Am := (a - t) \cdot (b - t)$ $Am = 21.98 \cdot in^2$

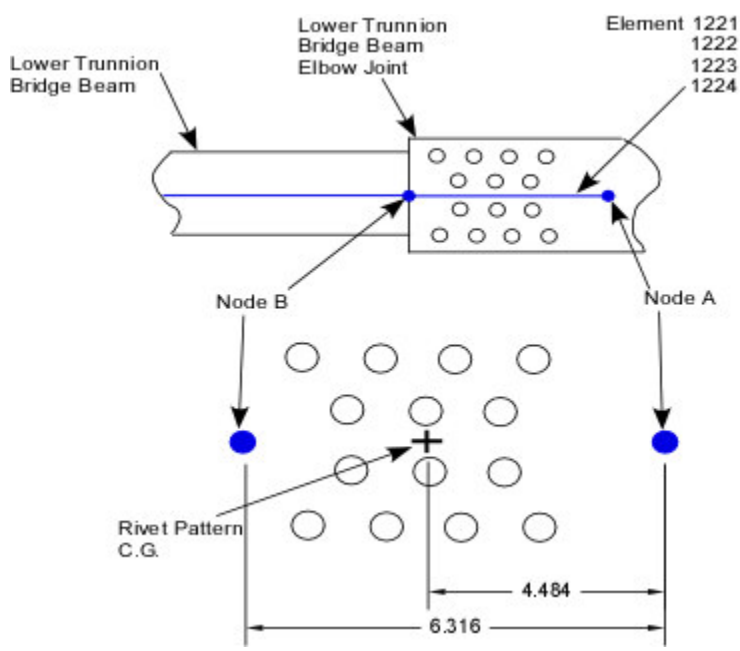

Figure 2.5.1.7-1 Rivet Pattern Dimensions for Beam Element Ends A and B.
Note: Figure is for reference only.

Bending Moment Interpolation:

NASTRAN gives beam moments at ends A and B of the beam element. The center of gravity of the rivet pattern falls between nodes A and B, therefore, the moment at the center of the rivet pattern needs to be interpolated.

Distance from end A to the center of the rivet pattern $c := 4.484 \cdot in$

Total length of beam element $d := 6.316 \cdot in$

(See Figure 2.5.1.7-1 and Ref. Appendix C4)

Moment My:

Difference $Mydiff_i := \left(Mya_i - Myb_i\right)$

Linearly interpolate at centroid of rivets

$My1 := \frac{c}{d} \cdot Mydiff \qquad My2 := \frac{d-c}{d} \cdot Mydiff$

Moment My interpolated at centroid of rivets

$My := Myb + My2$

Moment Mz:

Difference $Mzdiff_i := \left(Mza_i - Mzb_i\right)$

Linearly interpolate at centroid of rivets

$Mz1 := \frac{c}{d} \cdot Mzdiff \qquad Mz2 := \frac{d-c}{d} \cdot Mzdiff$

Moment Mz interpolated at centroid of rivets

$Mz := Mzb + Mz2$

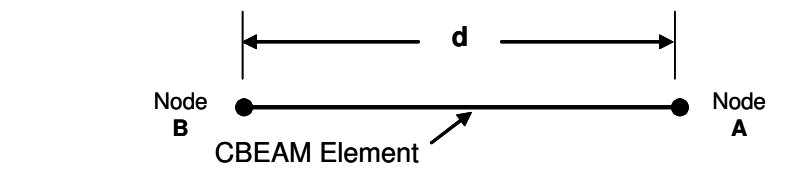

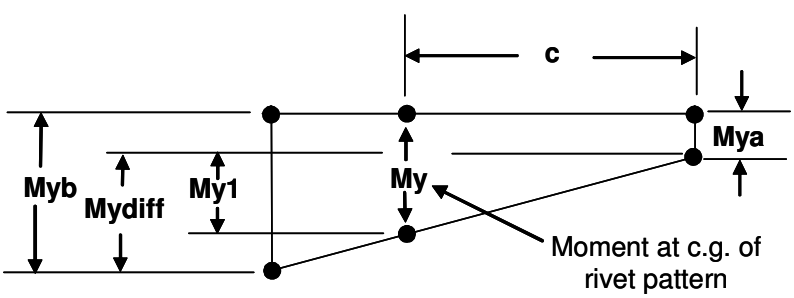

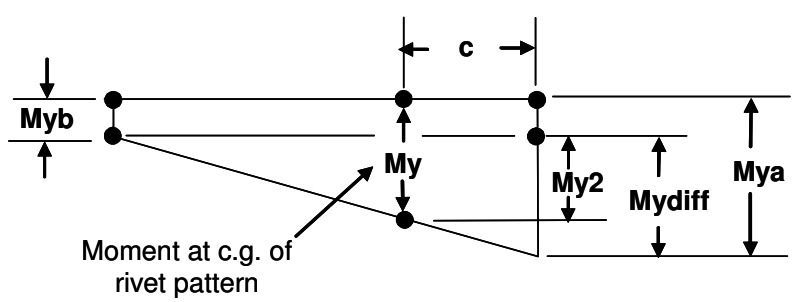

Free Body Diagram for Moment Distribution for My Interpolation
(Note: Similar moment distribution is used for Mz interpolation.)

Load in Rivets at Lower Bridge Beam to Elbow Joint:

Total Number of rivets in beam end:

$Nsps := 60$

Number of rivets reacting Fz shear load:

$psz := 28$

Number of rivets reacting Fy shear loads:

$psy := 32$

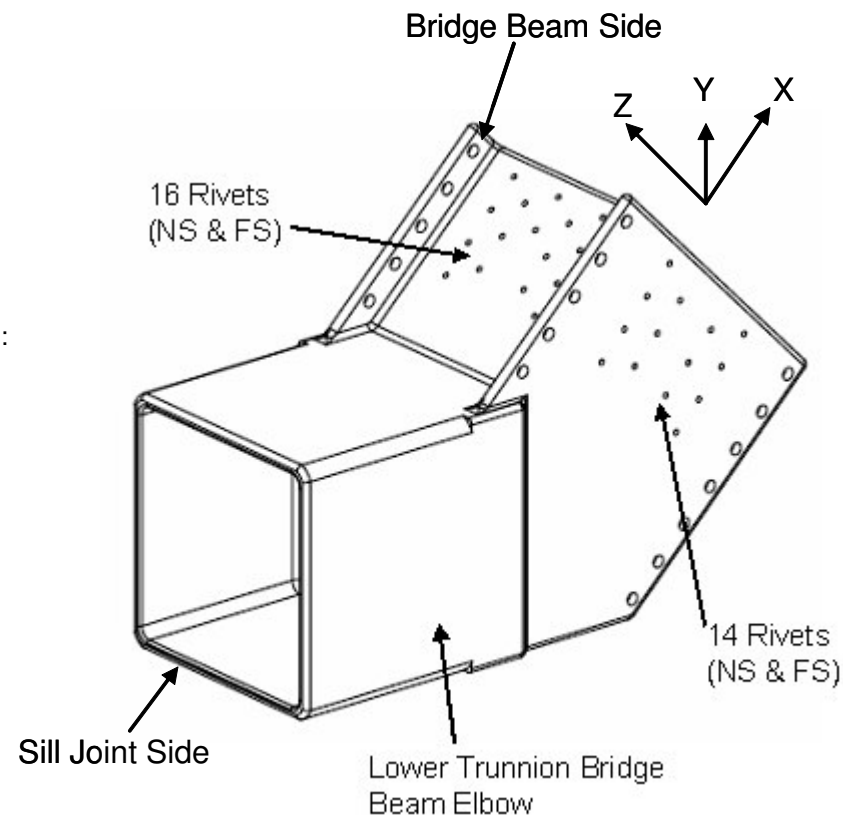

Shear load/rivet due to Fy $\quad Fsry := \frac{Fya}{psy} \quad max(Fsry) = 41.1 \cdot lbf$

Shear load/rivet due to Fz $\quad Fsrz := \frac{Fza}{psz} \quad max(Fsrz) = 87.6 \cdot lbf$

Note: The Fya and Fza forces have the same magnitude as the Fyb and Fzb forces. The end A forces are used above.

Shear flow due to torsion (Ref. Bruhn section A6.8) $\quad Fsrt := \frac{Mxa}{2 \cdot Am} \quad max(Fsrt) = 351.1 \cdot \frac{lbf}{in}$

Note: The shear load (Fsrt) is used to calculate the torsional load (Psrt) in the rivet due to the pitch on the rivet pattern. See Figure 2.5.1.7-2.

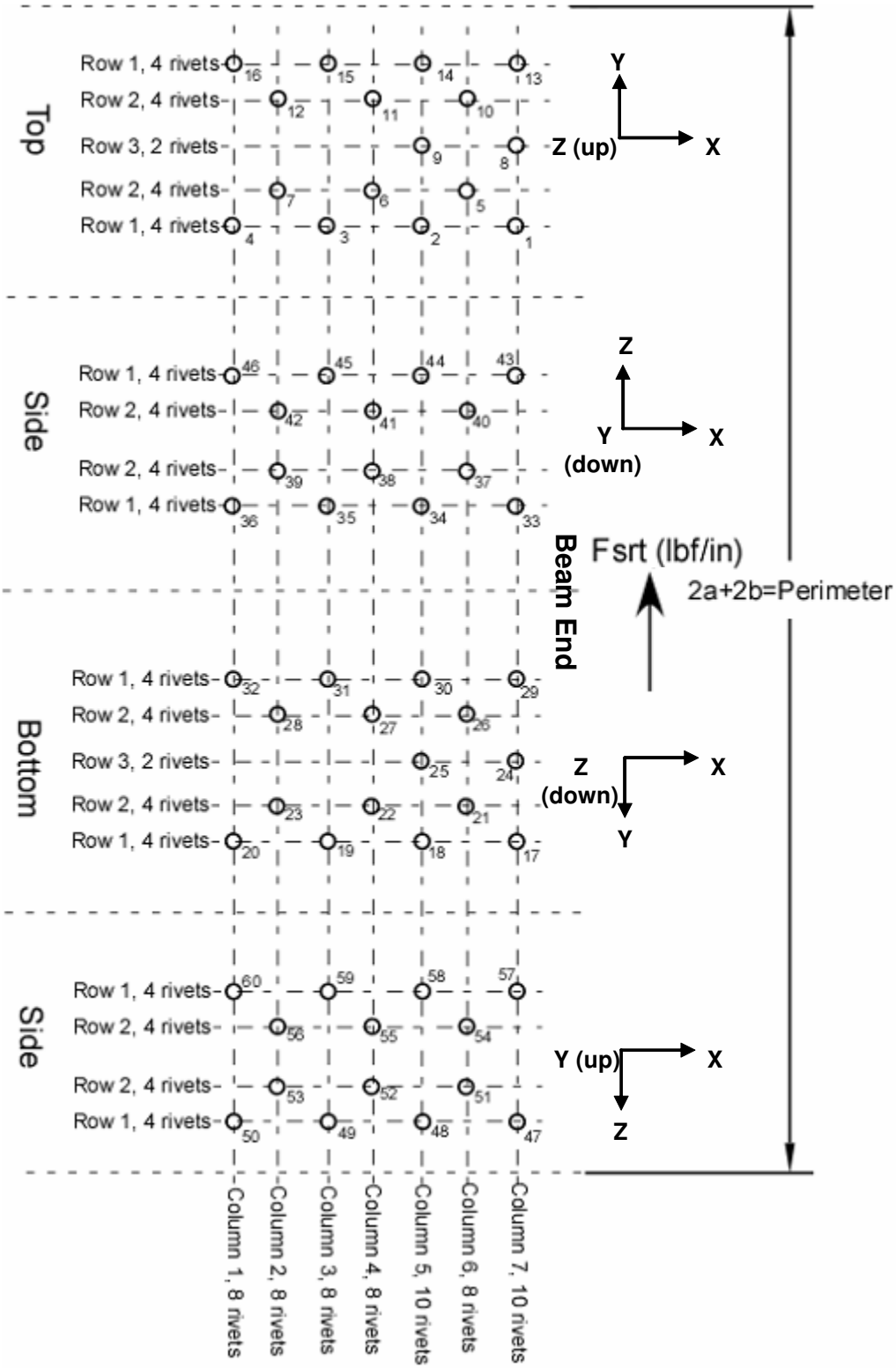

Figure 2.5.1.7-2 Layout of Rivet Patterns used to Calculate Rivet Pitch for Torsional Load

Calculation of Rivet Pitch:

It is assumed that all rivets share the torsion load equally. Therefore, each column of rivets has the same maximum load per rivet due to torsion.

Perimeter of rivet pattern $per := 2 \cdot a + 2 \cdot b$ $per = 19.8 \cdot in$

Loads in rivet due to torsion $Psrt := Fsrt \cdot \left(\frac{per}{Nsps} \right)$ $\max(Psrt) = 115.6 \cdot lbf$

Shear load in rivets due to beam axial load $Prta := \frac{Fxa}{Nsps}$ $\max(Prta) = 1000.7 \cdot lbf$

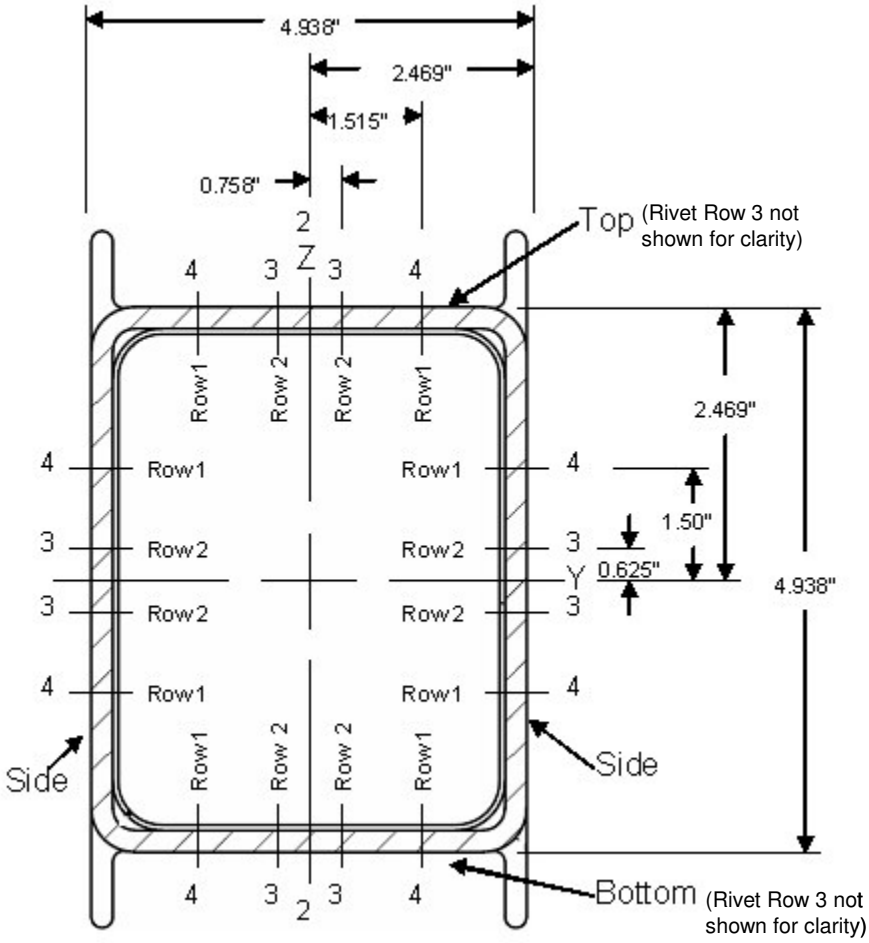

Note: Figure is for reference only.

Rivet Dimension Variables:
(Ref. SDG39135735 and SDG39135734)

$z1 := .625 \cdot in$

$z2 := 1.50 \cdot in$

$z3 := 2.469 \cdot in$

$y1 := .758 \cdot in$

$y2 := 1.515 \cdot in$

$y3 := 2.469 \cdot in$

Eccentrically Loaded Rivets due to My and Mz Moments:

Rivet Coordinate System Data

$j := 1 .. rows(coord)$ Counter for Coordinate Points

$x_j := coord_{j,2}$ Rivet Coordinate Points for x-direction

$y_j := coord_{j,3}$ Rivet Coordinate Points for y-direction

$z_j := coord_{j,4}$ Rivet Coordinate Points for z-direction

$$rivet_counter_j := \frac{coord_{j,1}}{in}$$

For Moment My:

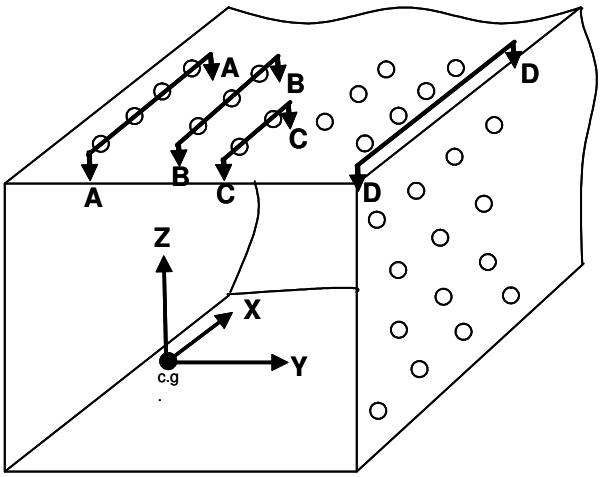

Eccentrically Loaded Rivet Pattern about My

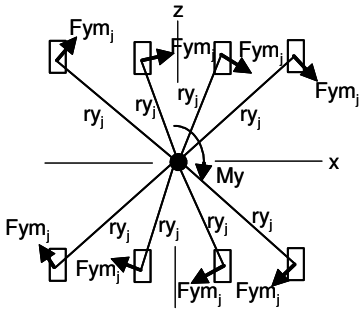

Cross-Section A-A

(Row 1, 16 rivets)

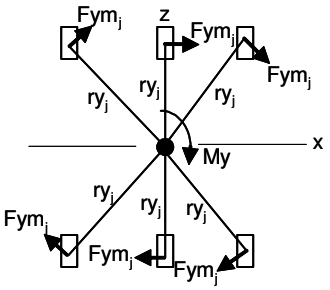

Cross-Section B-B

(Row 2, 12 rivets)

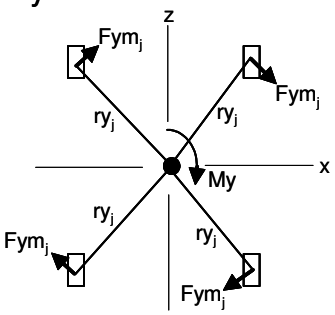

Cross-Section C-C

(Row 3, 4 rivets)

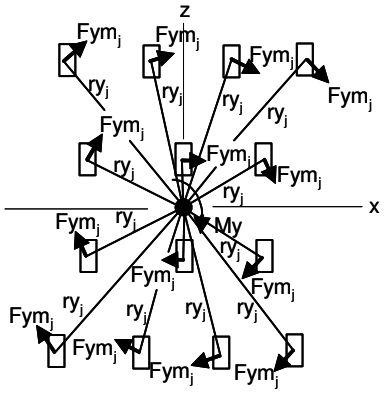

Cross-Section D-D

(Represents both sides, 28 rivets)

Note: Figure is for reference only.

$$ry_j := \left[\left(x_j\right)^2 + \left(z_j\right)^2\right]^{\frac{1}{2}}$$

Radial distance to each rivet from the centroid of the rivet pattern

$$sigry := \sum_{j=1}^{rows(coord)} \left(ry_j\right)^2$$

Sum of the radial directions for all rivets in the rivet pattern

$$\beta y_j := atan2\left(x_j, z_j\right)$$

Angle between resultant vector
and tension or shear vectors

(Note: The angle θ is defined off of the x-axis.
See below.)

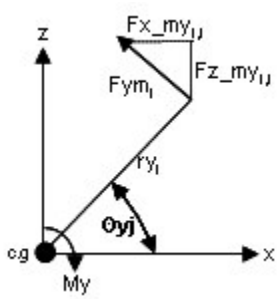

$$Fym_{i,j} := \frac{-My_i \cdot ry_j}{sigry}$$

Resultant Load at
Each Rivet

$$Fz_my_{i,j} := Fym_{i,j} \cdot \sin\left(\frac{u}{2} - \beta y_j\right)$$

z - component of Fym

$$Fx_my_{i,j} := Fym_{i,j} \cdot -\cos\left(\frac{u}{2} - \beta y_j\right)$$

x - component of Fym

Prepared By	B. Dyer	04/20/06	Engineering and Science Contract Group *Structural Analysis Section*	File Name ElbowtoLTBB.mcd
Revised By	G. Reyes	06/23/09		
Checked By	C. Bala			Draw ing No. SEG39135726
Title	Lower Trunnion Bridge Beam to Lower Trunnion Bridge Beam Elbow Rivet Analysis			

For Moment Mz:

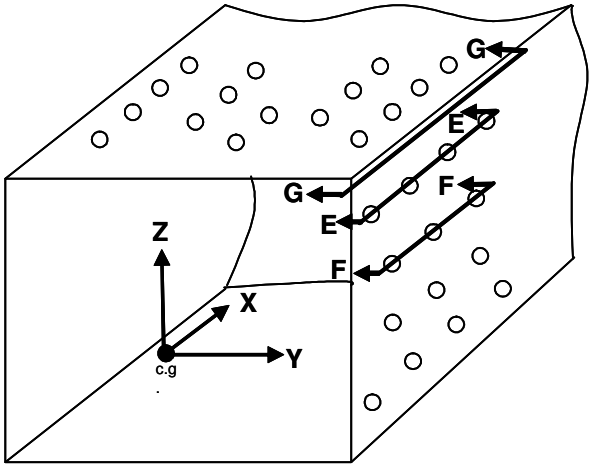

Eccentrically Loaded Rivet Pattern about Mz

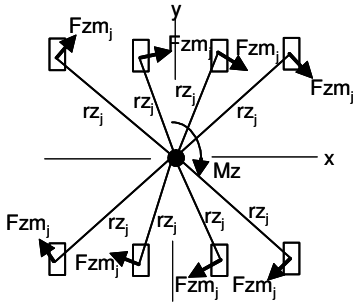

Cross-Section E-E

(Row 1, 16 rivets)

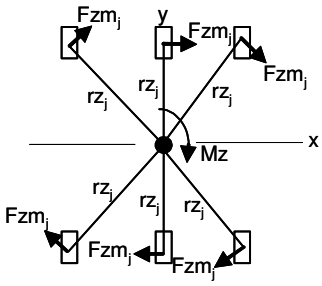

Cross-Section F-F

(Row 2, 12 rivets)

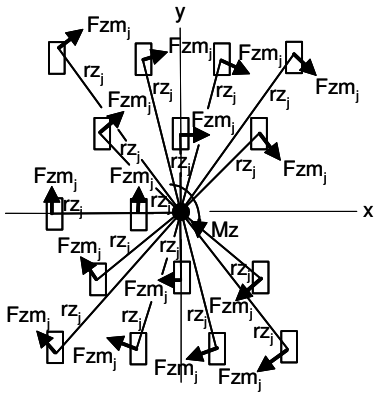

Cross-Section G-G

(Represents top and bottom, 32 rivets)

Note: Figure is for reference only.

$$rz_j := \left[\left(x_j\right)^2 + \left(y_j\right)^2\right]^{\frac{1}{2}}$$

Radial distance to each rivet from the centroid of the rivet pattern

$$sigrz := \sum_{j=1}^{rows(coord)} \left(rz_j\right)^2$$

Sum of the radial directions for all rivets in the rivet pattern

$$\beta z_j := atan2\left(x_j, y_j\right)$$

Angle between resultant vector and tension or shear vectors

$$Fzm_{i,j} := \frac{Mz_i \cdot rz_j}{sigrz}$$

Resultant Load at Each Rivet

(Note: The angle θ is defined off of the x-axis.
See below.)

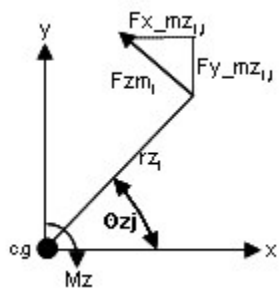

$$Fy_mz_{i,j} := Fzm_{i,j} \cdot \sin\left(\frac{u}{2} - \beta z_j\right)$$

y - component of Fzm

$$Fx_mz_{i,j} := Fzm_{i,j} \cdot -\cos\left(\frac{u}{2} - \beta z_j\right)$$

x - component of Fzm

$$F_{i,j} := \begin{cases} Fz_my_{i,j} & \text{if } rivet_counter_j \le 32 \\ Fy_mz_{i,j} & \text{otherwise} \end{cases}$$

Total Axial Load due to My and Mz Moments

$$\max\left(\overrightarrow{|F|}\right) = 299.3 \cdot lbf$$

Note: The axial loading is reacted by the beam and socket and not taken by the rivet. See section 2.1.8 for beam and socket analysis.

Total Rivet Shear Load:

$$Pt_{i,j} := \begin{cases} \sqrt{\left(Prta_i + Fx_my_{i,j} + Fx_mz_{i,j}\right)^2 + \left(Psrt_i + Fsry_i + Fy_mz_{i,j}\right)^2} & \text{if } j \le 32 \\ \sqrt{\left(Prta_i + Fx_my_{i,j} + Fx_mz_{i,j}\right)^2 + \left(Psrt_i + Fsrz_i + Fz_my_{i,j}\right)^2} & \text{otherwise} \end{cases} \qquad \max(Pt) = 1425.2 \cdot lbf$$

Margin of safety for Total Rivet Load:

$$MS1t := \frac{Fs \cdot cf}{Pt \cdot FSu \cdot FF} - 1 \qquad \min(MS1t) = 0.213$$

(Note: Fitting Factor (FF) included for misalignment, different shim thicknesses, etc. ...)

The following will output an array for each row of rivets with element identity, load case, load, and margin of safety from left to right.

$$output := augment(ID, LC, MS1t)$$

$rows(output) = 768$ Number of rows in the "output" array

$cols(output) = 62$ Number of columns in the "output" array

The "output" array is then searched for the location of the minimum margin. The match function is used to locate the minimum margin of safety and the element identity, load case, rivet location, and maximum load are pulled from the array.

$$match(\min(MS1t), MS1t) = \begin{bmatrix} 569 \\ 1 \end{bmatrix}$$

$min_LC := output_{569,2}$ Load Case for Minimum Margin of Safety

$min_ID := output_{569,1}$ Element ID for Minimum Margin of Safety

Rivet number 1 is the rivet with the minimum margin of safety of 0.213.

Minimum Margin of Safety:

Minimum Margin of Safety	$\min(MS1t) = 0.213$
Element ID for Minimum Margin of Safety	$min_ID = 1221$
Load Case for Minimum Margin of Safety	$min_LC = 4015$
Maximum Rivet Load for Minimum Margin of Safety	$\max(Pt) = 1425.2 \cdot lbf$
Rivets with Minimum Margin of Safety	Rivet number 1 (See figure 2.5.1.7 - 2 for rivet location)

Bearing on Hole Wall:

Hole diameter $dh := 0.257 \cdot in$ (Ref. SEG39135726, Flag Note 2)

Tube thickness $tp := 0.25 \cdot in$ (Ref. SDG39135735)

Bearing area $Ab := dh \cdot tp$ $Ab = 0.064 \cdot in^2$

Max. load per rivet $max(Pt) = 1425.2 \cdot lbf$

Max. bearing stress $b := \frac{max(Pt)}{Ab}$ $b = 22181.7 \cdot psi$

Margin of safety $MSb := \frac{Fbru \cdot cb}{b \cdot FSu \cdot FF} - 1$ $MSb = 2.07$

Shear tear out:

Edge distance $e := 0.520 \cdot in$ (Ref. SDG39135734)

Note: Using this e is conservative, since actual rivet force is in general at some angle.

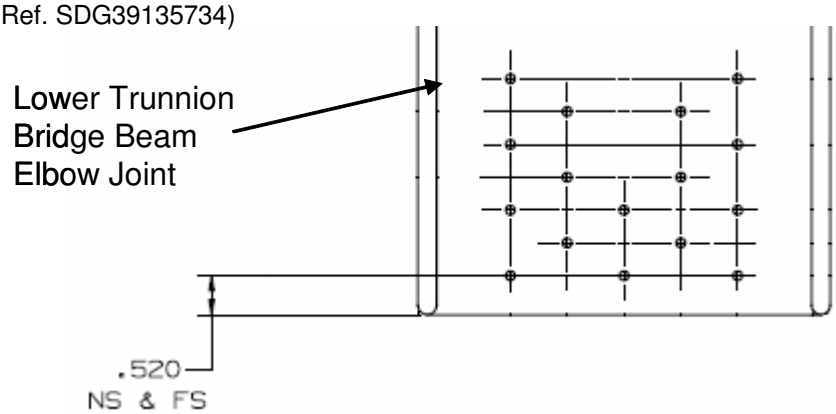

Hole diameter $dh := 0.257 \cdot in$

E over D ratio $\frac{e}{dh} = 2.023$

Tube thickness $tp := 0.25 \cdot in$

Shear out area $As := 2 \cdot \left(e - \frac{dh}{2} \cdot \cos(40 \cdot deg) \right) \cdot tp$ $As = 0.211 \cdot in^2$

Max. load per rivet $max(Pt) = 1425.2 \cdot lbf$

Max. shear tear out stress $=s := \frac{max(Pt)}{As}$ $=s = 6761.4 \cdot psi$

Margin of safety $MSsh := \frac{Fsu \cdot cd}{=s \cdot FSu \cdot FF} - 1$ $MSsh = 2.18$

2.5.1.8 Lower Trunnion Bridge Beam to Lower Vacuum Case Joint

Lower Trunnion Bridge Beam to Lower Vacuum Case Joint Rivet Analysis

The lower vacuum case joint SDG39135737 connects to the lower trunnion bridge beam SDG39135735, in 4 locations. The lower vacuum case joint is fastened to the lower trunnion bridge beam, with NAS1398M8, 0.25 in rivets. The lower vacuum case joint is machined from 7050-T7451 plate and the lower trunnion bridge beam is extruded from 7075-T73511. CBEAM elements 1203, 1206, 1209, and 1212 in the loads model represents the portion of the elbow joint that interfaces with the bridge beam. The rivet pattern centroid is 1.832 in from end A of the beam element outside of the joint. See Appendix C4 for AMS Rivet Pattern Location Table.

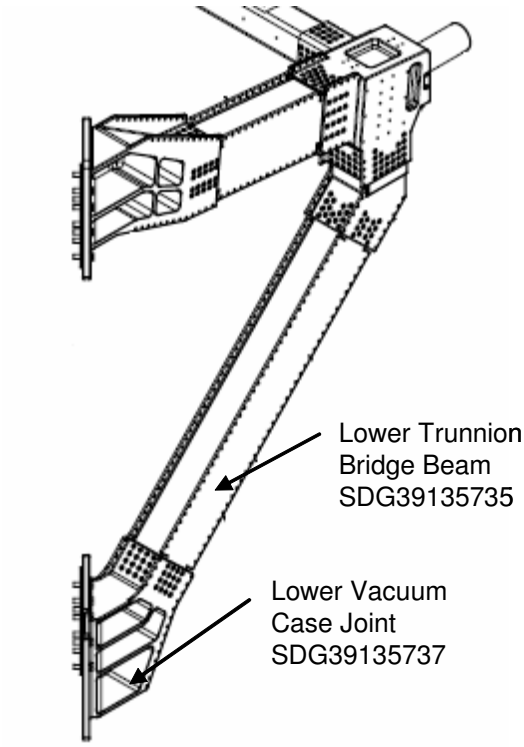

Factors of safety:

Ultimate Factor of Safety: $FSu := 1.4$

Fitting Factor: $FF := 1.15$

Loads model 2-06 was run in NASTRAN for 192 load cases. Beam element forces were recovered, and given in the data file "LTBBtolowerVCJ.dat" for elements 1203, 1206, 1209, and 1212.

Material Strength for Rivets:

Rivets are NAS1398 type M, 0.25 in. blind protruding head Monel rivets

(Ref. NAS1400, sheet 5)

Max. rivet shear strength $Fs := 2840 \cdot lbf$

Material Strength for Lower Trunnion Bridge Beam:

Tube material is extruded 7075-T73511 with e/D=2.0

(Ref. MIL-HDBK-5J, Table 3.7.6.0(g2))

Allowable bearing strength $Fbru := 119000 \cdot psi$

Allowable shear strength $Fsu := 35000 \cdot psi$

Temperature:

Maximum Temperature $Tmax := 150 \cdot deg$

(Ref. Appendix C2, AMS-02 Temperature Table)

Temperature Correction Factor (For Fs) $cf := .98$

(Ref. Appendix C5)

Temperature Correction Factor (For Fsu) $cd := .99$

(Ref. MIL-HDBK-5J, Figure 3.7.6.1.2(b))

Temperature Correction Factor (For Fbru) $cb := .92$

(Ref. MIL-HDBK-5J, Figure 3.7.6.1(a))

$data := READPRN("LTBBtolowerVCJ.dat")$ $ORIGIN := 1$ $i := 1 .. rows(data)$

Beam Section Properties:

Thickness of tube $t := 0.25 \cdot in$ (Ref. SDG39135735)

Width of tube $a := 4.938 \cdot in$ (Ref. SDG39135735)

Depth of tube $b := 4.938 \cdot in$ (Ref. SDG39135735)

Enclosed area of mean width and mean height $Am := (a - t) \cdot (b - t)$ $Am = 21.98 \cdot in^2$

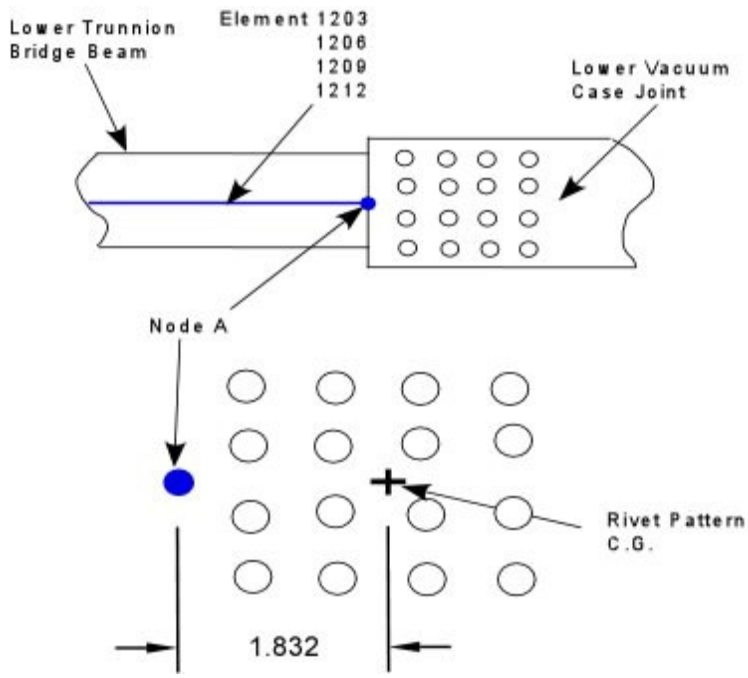

Figure 2.5.1.8-1 Rivet Pattern Dimensions for Beam Element Ends A and B.
Note: Figure is for reference only.

Note: The A and B ends of the beam elements that lay inside of the socket of the Vacuum Case Joint are tied to RBE elements that are "spidered" out to shell elements. This modeling technique stiffens the beam element inside of the socket allowing for lower loads at ends A and B. Therefore, loads are taken from end A of elements 1203, 1206, 1209, and 1212. A moment extrapolation from End A is performed to locate the moments at the center of the rivet pattern.

Reading in Data File:

$data := READPRN("LTBBtolowerVCJ.dat")$ $ORIGIN := 1$ $i := 1 .. rows(data)$

Loads from Beam End A:

Axial Load $Fxa_i := data_{i,7} \cdot lbf$

Shear in Y axis $Fya_i := data_{i,5} \cdot lbf$

Shear in Z axis $Fza_i := data_{i,6} \cdot lbf$

Torsion $Mxa_i := data_{i,8} \cdot in \cdot lbf$

Moment about Y axis $Mya_i := -data_{i,4} \cdot in \cdot lbf$

Moment about Z axis $Mza_i := data_{i,3} \cdot in \cdot lbf$

$ID_i := data_{i,1}$ $LC_i := data_{i,2}$

Extrapolation of Moments:

A moment extrapolation from End A is performed to locate moments at the center of the rivet pattern.

Distance from beam end A to the center of the rivet pattern: $dist := 1.832 \cdot in$

Extrapolation of My Moment: $My_i := Mya_i + Fza_i \cdot dist$

Extrapolation of Mz Moment: $Mz_i := Mza_i + Fya_i \cdot dist$

Load in Rivets at Lower Bridge Beam to Elbow Joint:

Total Number of rivets in beam end:

$Nsps := 64$

Number of rivets reacting Fz shear load:

$psz := 32$

Number of rivets reacting Fy shear loads:

$psy := 32$

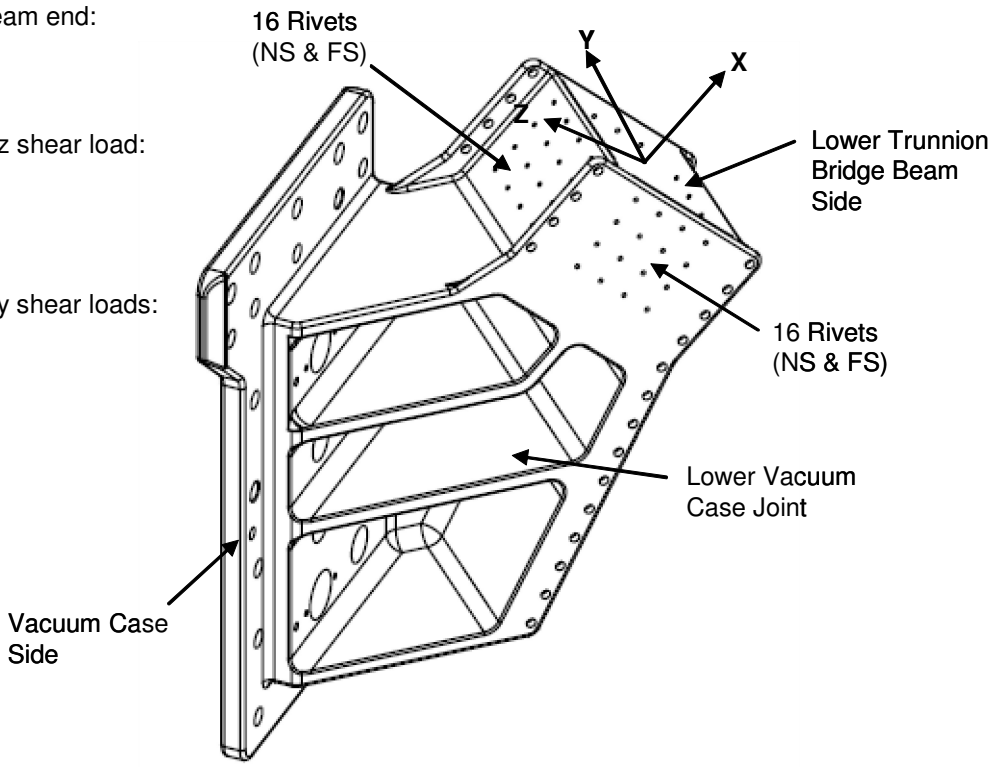

Shear load/rivet due to Fy $\quad Fsry := \frac{Fya}{psy} \quad max(Fsry) = 62 \cdot lbf$

Shear load/rivet due to Fz $\quad Fsrz := \frac{Fza}{psz} \quad max(Fsrz) = 99.9 \cdot lbf$

Note: The Fya and Fza forces have the same magnitude as the Fyb and Fzb forces. The end A forces are used above.

Shear flow due to torsion
(Ref. Bruhn section A6.8) $\quad Fsrt := \frac{Mxa}{2 \cdot Am} \quad max(Fsrt) = 206.3 \cdot \frac{lbf}{in}$

Note: The shear load (Fsrt) is used to calculate the torsional load (Psrt) in the rivet due to the pitch on the rivet pattern. See Figure 2.5.1.8-2.

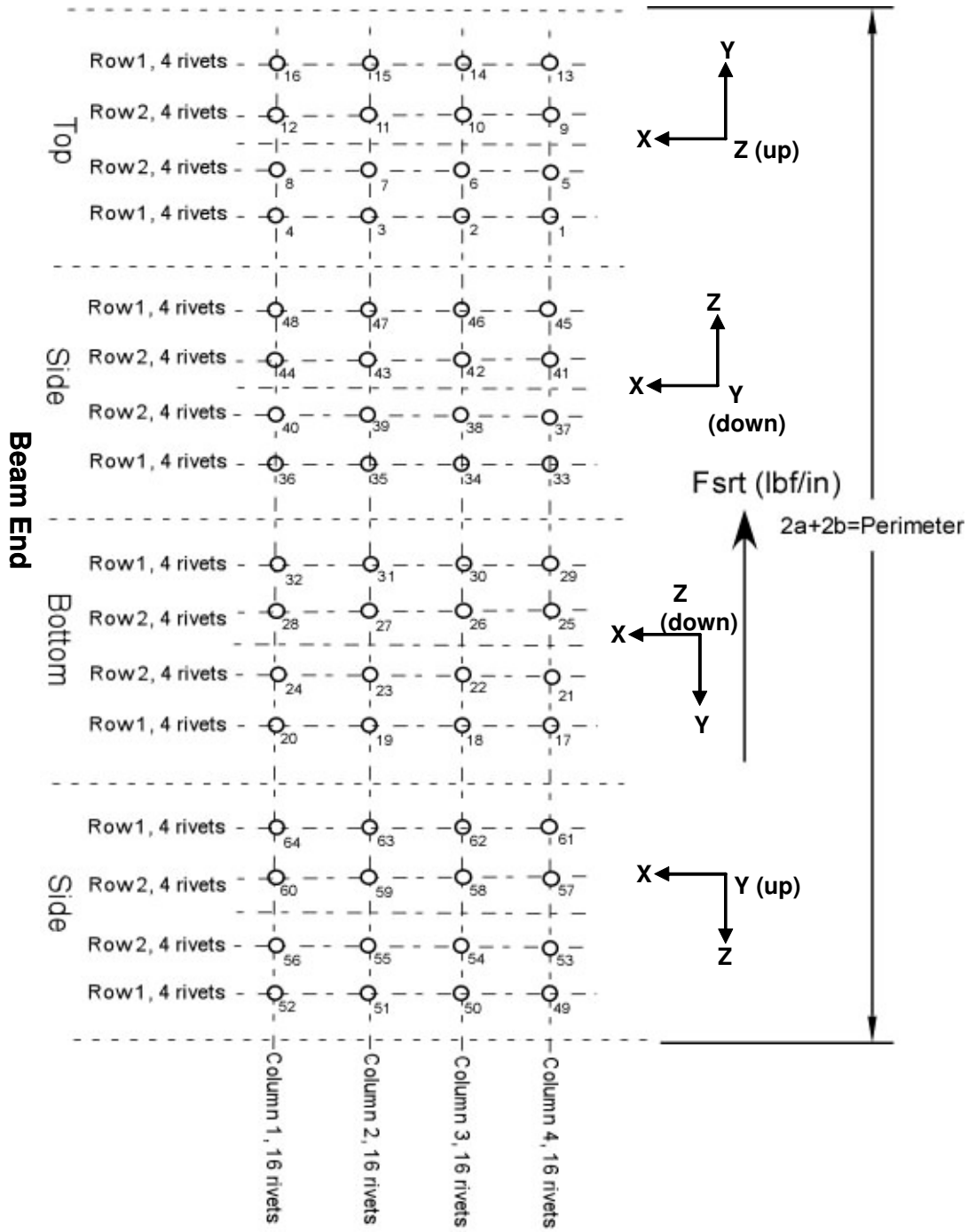

Figure 2.5.1.8-2 Layout of Rivet Patterns used to Calculate Rivet Pitch for Torsional Load

Calculation of Rivet Pitch:

It is assumed that all rivets share the torsion load equally. Therefore, each column of rivets has the same maximum load per rivet due to torsion.

Perimeter of rivet pattern $per := 2 \cdot a + 2 \cdot b$ $per = 19.8 \cdot in$

Loads in rivet due to torsion $Psrt := Fsrt \cdot \left(\frac{per}{Nsps} \right)$ $\max(Psrt) = 63.7 \cdot lbf$

Shear load in rivets due to beam axial load $Prta := \frac{Fxa}{Nsps}$ $\max(Prta) = 919.4 \cdot lbf$

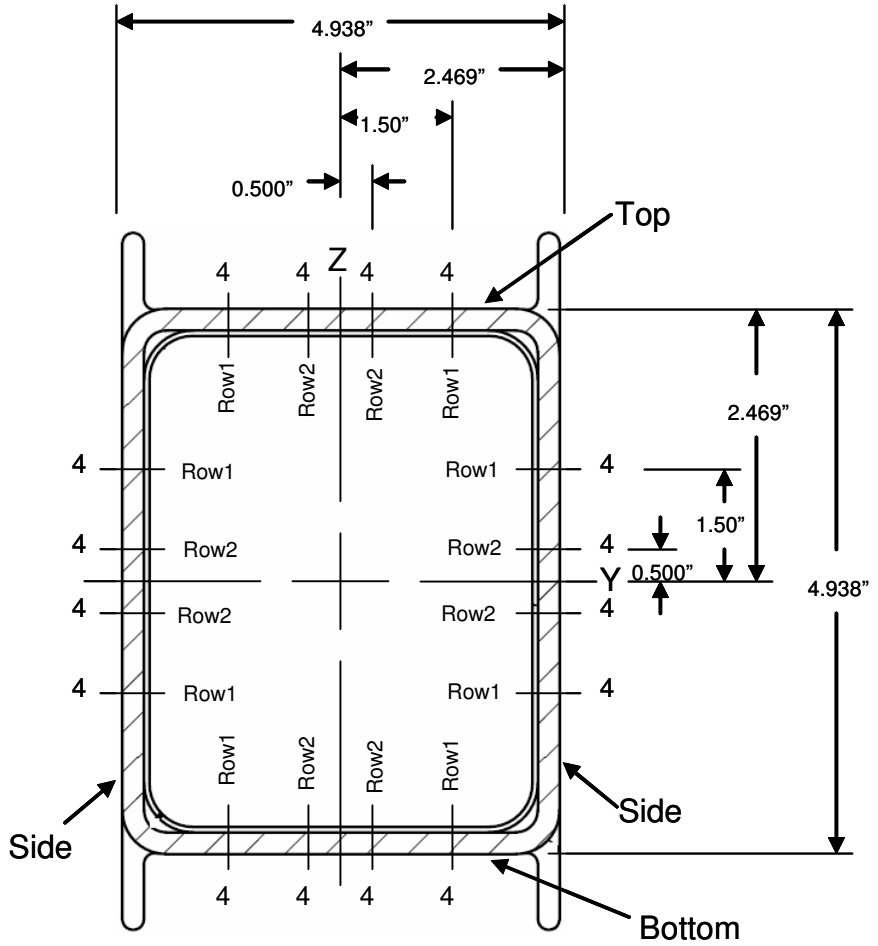

Note: Figure is for reference only.

Rivet Dimension Variables:
(Ref. SDG39135735 and SDG39135734)

$z1 := .500 \cdot in$

$z2 := 1.50 \cdot in$

$z3 := 2.469 \cdot in$

$y1 := .500 \cdot in$

$y2 := 1.50 \cdot in$

$y3 := 2.469 \cdot in$

Eccentrically Loaded Rivets due to My and Mz Moments:

Rivet Coordinate System Data

$j := 1 .. rows(coord)$ Counter for Coordinate Points

$x_j := coord_{j,2}$ Rivet Coordinate Points for x-direction

$y_j := coord_{j,3}$ Rivet Coordinate Points for y-direction

$z_j := coord_{j,4}$ Rivet Coordinate Points for z-direction

$$rivet_counter_j := \frac{coord_{j,1}}{in}$$

Prepared By	B. Dyer	04/25/06	Engineering and Science Contract Group *Structural Analysis Section*	File Name LTBBtolowerVCJ.mcd
Revised By	G. Reyes	06/23/09		
Checked By	C. Bala			Draw ing No. SEG39135726
Title	Lower Trunnion Bridge Beam to Lower Vacuum Case Joint Rivet Analysis			

For Moment My:

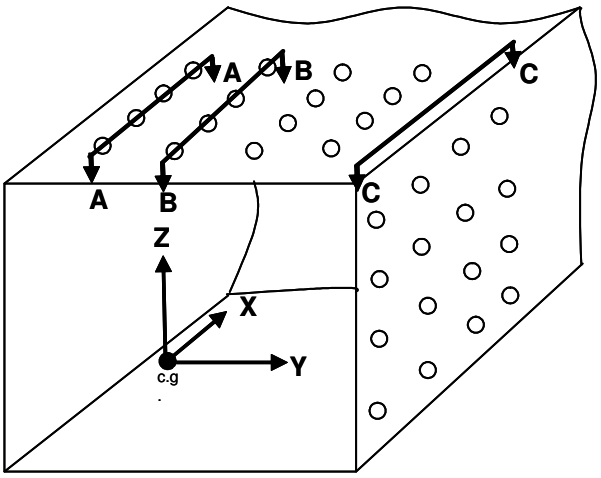

Eccentrically Loaded Rivet Pattern about My

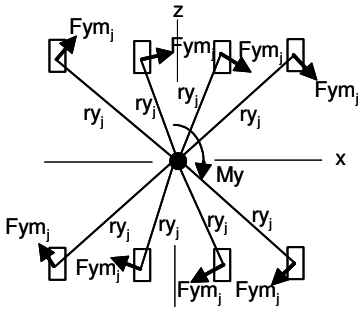

Cross-Section A-A

(Row 1, 16 rivets)

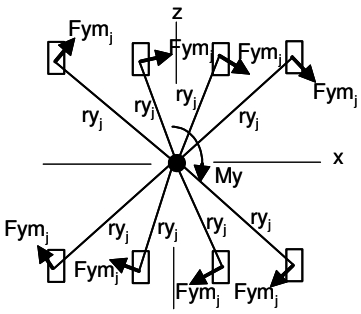

Cross-Section B-B

(Row 2, 16 rivets)

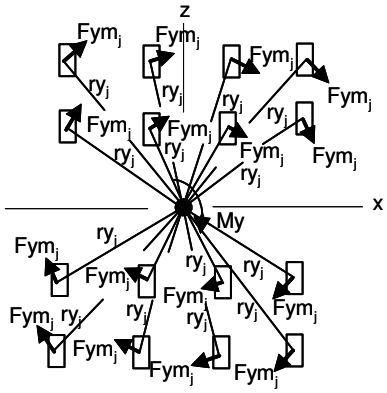

Cross-Section C-C

(Represents both sides, 32 rivets)

Note: Figure is for reference only.

$$ry_j := \left[\left(x_j\right)^2 + \left(z_j\right)^2\right]^{\frac{1}{2}}$$

Radial distance to each rivet from the centroid of the rivet pattern

$$sigry := \sum_{j=1}^{rows(coord)} \left(ry_j\right)^2$$

Sum of the radial directions for all rivets in the rivet pattern

$$\beta y_j := atan2\left(x_j, z_j\right)$$

Angle between resultant vector
and tension or shear vectors

(Note: The angle θ is defined off of the x-axis.
See below.)

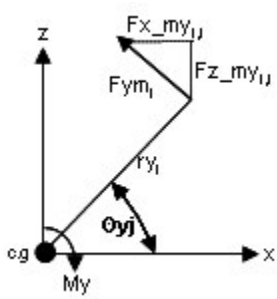

$$Fym_{i,j} := \frac{My_i \cdot ry_j}{sigry}$$

Resultant Load at
Each Rivet

$$Fz_my_{i,j} := Fym_{i,j} \cdot \sin\left(\frac{u}{2} - \beta y_j\right)$$

z - component of Fym

$$Fx_my_{i,j} := Fym_{i,j} \cdot -\cos\left(\frac{u}{2} - \beta y_j\right)$$

x - component of Fym

Prepared By	B. Dyer	04/25/06	Engineering and Science Contract Group *Structural Analysis Section*	File Name LTBBtolowerVCJ.mcd
Revised By	G. Reyes	06/23/09		
Checked By	C. Bala			Draw ing No. SEG39135726
Title	Lower Trunnion Bridge Beam to Lower Vacuum Case Joint Rivet Analysis			

For Moment Mz:

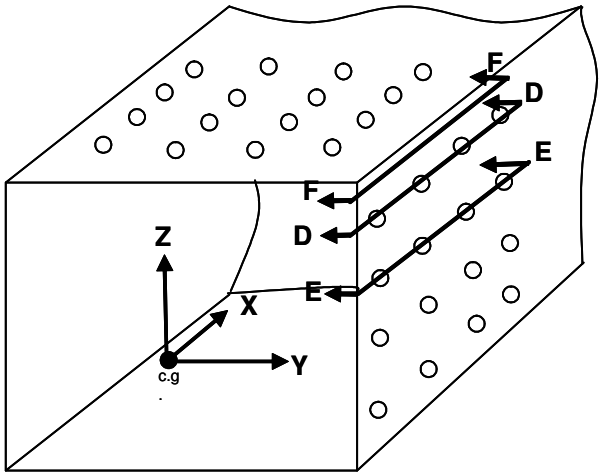

Eccentrically Loaded Rivet Pattern about Mz

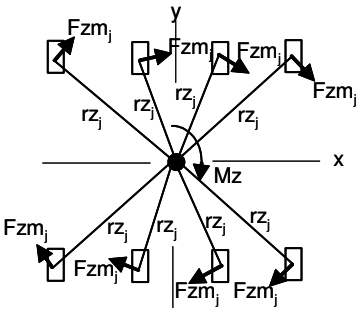

Cross-Section D-D

(Row 1, 16 rivets)

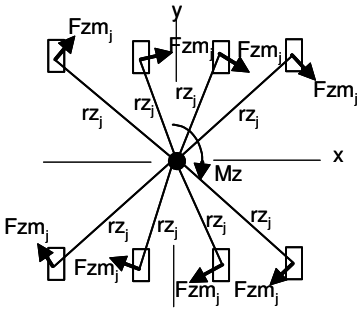

Cross-Section E-E

(Row 2, 16 rivets)

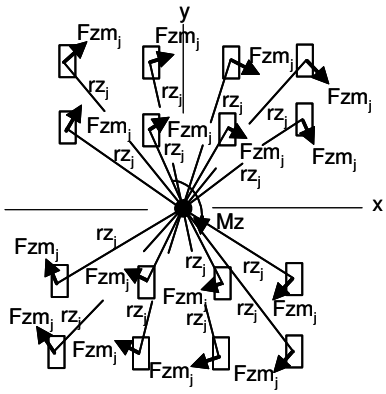

Cross-Section F-F

(Represents both sides, 32 rivets)

Note: Figure is for reference only.

$$rz_j := \left[\left(x_j\right)^2 + \left(y_j\right)^2\right]^{\frac{1}{2}}$$

Radial distance to each rivet from the centroid of the rivet pattern

$$sigrz := \sum_{j=1}^{rows(coord)} \left(rz_j\right)^2$$

Sum of the radial directions for all rivets in the rivet pattern

$$\beta z_j := atan2\left(x_j, y_j\right)$$

Angle between resultant vector and tension or shear vectors

$$Fzm_{i,j} := \frac{(-Mz)_i \cdot rz_j}{sigrz}$$

Resultant Load at Each Rivet

(Note: The angle θ is defined off of the x-axis.
See below.)

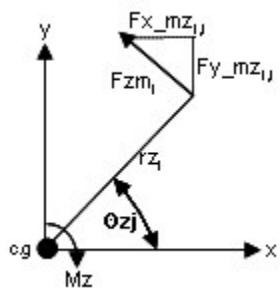

$$Fy_mz_{i,j} := Fzm_{i,j} \cdot \sin\left(\frac{u}{2} - \beta z_j\right)$$

y - component of Fzm

$$Fx_mz_{i,j} := Fzm_{i,j} \cdot -\cos\left(\frac{u}{2} - \beta z_j\right)$$

x - component of Fzm

$$F_{i,j} := \begin{cases} Fz_my_{i,j} & \text{if } rivet_counter_j \le 32 \\ Fy_mz_{i,j} & \text{otherwise} \end{cases}$$

Total Axial Load due to My and Mz Moments

$$\max\left(\overrightarrow{|F|}\right) = 271.8 \cdot lbf$$

Note: The axial loading is reacted by the beam and socket and not taken by the rivet. See section 2.1.8 for beam and socket analysis.

Total Rivet Shear Load:

$$Pt_{i,j} := \begin{cases} \sqrt{\left(Prta_i + Fx_my_{i,j} + Fx_mz_{i,j}\right)^2 + \left(Psrt_i + Fsry_i + Fy_mz_{i,j}\right)^2} & \text{if } j \le 32 \\ \sqrt{\left(Prta_i + Fx_my_{i,j} + Fx_mz_{i,j}\right)^2 + \left(Psrt_i + Fsrz_i + Fz_my_{i,j}\right)^2} & \text{otherwise} \end{cases}$$

$$\max(Pt) = 1520.2 \cdot lbf$$

Margin of safety for Total Rivet Load:

$$Pt_{570,45} = 1520.2 \cdot lbf$$

$$MS1t := \frac{Fs \cdot cf}{Pt \cdot FSu \cdot FF} - 1$$

$$\min(MS1t) = 0.137$$

(Note: Fitting Factor (FF) included for misalignment, different shim thicknesses, etc. ...)

The following will output an array for each row of rivets with element identity, load case, load, and margin of safety from left to right.

$$output := augment(ID, LC, MS1t)$$

$rows(output) = 768$ Number of rows in the "output" array

$cols(output) = 66$ Number of columns in the "output" array

The "output" array is then searched for the location of the minimum margin. The match function is used to locate the minimum margin of safety and the element identity, load case, rivet location, and maximum load are pulled from the array.

$$match(\min(MS1t), MS1t) = \begin{bmatrix} 570 \\ 45 \end{bmatrix}$$

$min_LC := output_{570,2}$ Load Case for Minimum Margin of Safety

$min_ID := output_{570,1}$ Element ID for Minimum Margin of Safety

Rivet number 45 is the rivet with the minimum margin of safety of 0.137.

Minimum Margin of Safety:

Minimum Margin of Safety	$\min(MS1t) = 0.137$
Element ID for Minimum Margin of Safety	$min_ID = 1206$
Load Case for Minimum Margin of Safety	$min_LC = 4015$
Maximum Rivet Load for Minimum Margin of Safety	$\max(Pt) = 1520.2 \cdot lbf$
Rivets with Minimum Margin of Safety	Rivet number 45 (See figure 2.5.1.8 - 2 for rivet location)

Bearing on Hole Wall:

Hole diameter $dh := 0.257 \cdot in$ (Ref. SEG39135726, Flag Note 2)

Tube thickness $tp := 0.25 \cdot in$ (Ref. SDG39135735)

Bearing area $Ab := dh \cdot tp$ $Ab = 0.064 \cdot in^2$

Max. load per rivet $max(Pt) = 1520.2 \cdot lbf$

Max. bearing stress $b := \frac{max(Pt)}{Ab}$ $b = 23660.1 \cdot psi$

Margin of safety $MSb := \frac{Fbru \cdot cb}{b \cdot FSu \cdot FF} - 1$ $MSb = 1.87$

Shear tear out:

Edge distance $e := 0.520 \cdot in$ (Ref. SDG39135737)

Note: Using this e is conservative, since actual rivet force is in general at some angle.

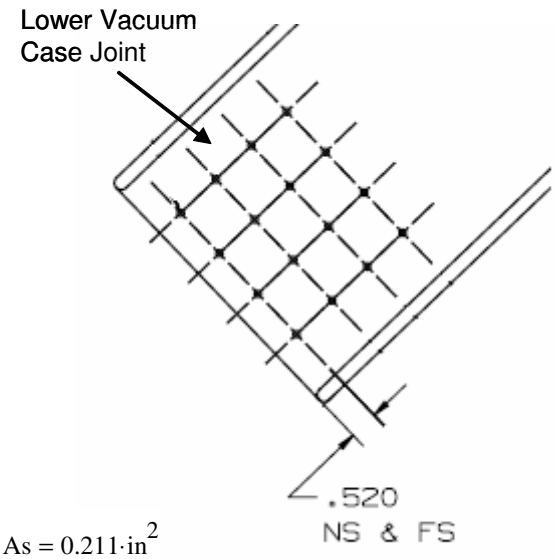

Hole diameter $dh := 0.257 \cdot in$

E over D ratio $\frac{e}{dh} = 2.023$

Tube thickness $tp := 0.25 \cdot in$

Shear out area $As := 2 \cdot \left(e - \frac{dh}{2} \cdot \cos(40 \cdot deg)\right) \cdot tp$ $As = 0.211 \cdot in^2$

Max. load per rivet $max(Pt) = 1520.2 \cdot lbf$

Max. shear tear out stress $=s := \frac{max(Pt)}{As}$ $=s = 7212 \cdot psi$

Margin of safety $MSsh := \frac{Fsu \cdot cd}{=s \cdot FSu \cdot FF} - 1$ $MSsh = 1.98$

2.5.2 Lower USS-02 Riveted Joints

Lower USS-02 Riveted Joints

The Lower USS-02 Rivet Analysis is performed in the following report sections.

2.5.2.1	Lower USS-02 to Upper USS-02 to Lower Angle Beam
2.5.2.2	Lower Angle Beam to Lower Angle Flange Beam Flange
2.5.2.3	EMC Box Tubes to Centerbody Joints
2.5.2.4	RICH Bracket to EMC Box Tubes
2.5.2.5	RICH PAS Brackets to EMC Box Tubes

2.5.2.1 Lower USS-02 to Upper USS-02 to Lower Angle Beam

Lower Angle Beam to Lower to Upper USS-02 Joint Rivet Analysis

The Lower Angle Beam SDG39135764 connects to the Lower to Upper USS-02 Joint SDG39135762 in 4 locations. The lower angle beam is fastened to the lower to upper joint, with NAS1398DFC, 0.25 in rivets. The lower to upper joint is machined from 7050-T7451 plate and the lower angle beam is extruded from 7075-T73511. CBEAM elements 1604, 1609, 1614, and 1619 in the loads model represents the portion of the lower to upper joint that interfaces with the lower angle beam. The rivet pattern centroid is 2.688 in from end A of the beam element. Element length is 5.375 in. See Appendix C4 for AMS Rivet Pattern Location Table.

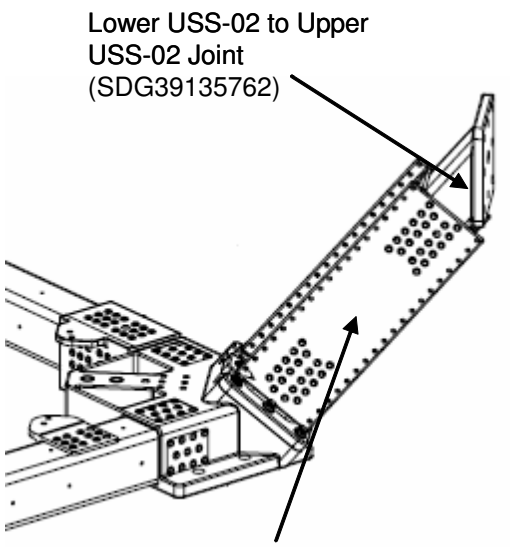

Lower USS-02 Assembly (SEG39135758)

Material Strength for Rivets:

Rivets are NAS1398 type D, 0.25 in. blind protruding head 2017 Aluminum rivets

(Ref. NAS1400, sheet 5)

Max. rivet shear strength $Fs := 1970 \cdot lbf$

Material Strength for Lower Angle Beam:

Tube material is extruded 7075-T73511 with e/D=2.0

(Ref. MIL-HDBK-5J, Table 3.7.6.0(g2))

Allowable bearing strength $Fbru := 119000 \cdot psi$

Allowable shear strength $Fsu := 35000 \cdot psi$

Factors of safety:

Ultimate Factor of Safety: $FSu := 1.4$

Fitting Factor: $FF := 1.15$

Temperature:

Maximum Temperature $Tmax := 161 \cdot deg$

(Ref. Appendix C2, AMS-02 Temperature Table)

Temperature Correction Factor (For Fs) $cf := .97$

(Ref. Appendix C13)

Temperature Correction Factor (For Fsu) $cd := .99$

(Ref. MIL-HDBK-5J, Figure 3.7.6.1.2(b))

Temperature Correction Factor (For Fbru) $cb := .92$

(Ref. MIL-HDBK-5J, Figure 3.7.6.1(a))

Loads model 2-06 was run in NASTRAN for 192 load cases. Beam element forces were recovered, and given in the data file "uppertolowertoLAB.dat" for elements 1604, 1609, 1614, and 1619.

$data := READPRN(\text{"uppertolowertoLAB.dat"})$ $ORIGIN := 1$ $i := 1 .. rows(data)$

Loads from Beam End A:

Axial Load $Fxa_i := data_{i,7} \cdot lbf$

Shear in Y axis $Fya_i := data_{i,5} \cdot lbf$

Shear in Z axis $Fza_i := data_{i,6} \cdot lbf$

Torsion $Mxa_i := data_{i,8} \cdot in \cdot lbf$

Moment about Y axis $Mya_i := -data_{i,4} \cdot in \cdot lbf$

Moment about Z axis $Mza_i := data_{i,3} \cdot in \cdot lbf$

Loads from Beam End B:

Axial Load $Fxb_i := data_{i,13} \cdot lbf$

Shear in Y axis $Fyb_i := data_{i,11} \cdot lbf$

Shear in Z axis $Fzb_i := data_{i,12} \cdot lbf$

Torsion $Mxb_i := data_{i,14} \cdot in \cdot lbf$

Moment about Y axis $Myb_i := -data_{i,10} \cdot in \cdot lbf$

Moment about Z axis $Mzb_i := data_{i,9} \cdot in \cdot lbf$

$ID_i := data_{i,1}$ $LC_i := data_{i,2}$

Beam Section Properties:

Thickness of tube $t := 0.25 \cdot in$ (Ref. SDG39135764)

Width of tube $a := 4.062 \cdot in$ (Ref. SDG39135764)

Depth of tube $b := 4.062 \cdot in$ (Ref. SDG39135764)

Enclosed area of mean width and mean height $Am := (a - t) \cdot (b - t)$ $Am = 14.53 \cdot in^2$

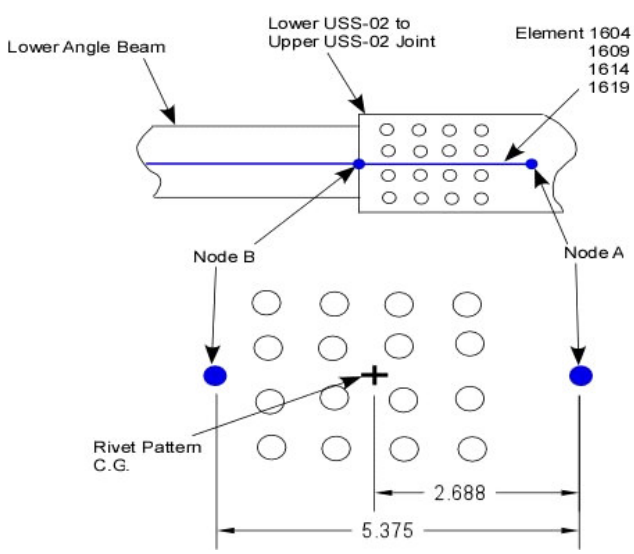

Figure 2.5.2.1-1 Rivet Pattern Dimensions for Beam Element Ends A and B.

Note: Figure is for reference only.

Bending Moment Interpolation:

NASTRAN gives beam moments at ends A and B of the beam element. The center of gravity of the rivet pattern falls between nodes A and B, therefore, the moment at the center of the rivet pattern needs to be interpolated.

Distance from end A to the center of the rivet pattern $c := 2.688 \cdot in$

Total length of beam element $d := 5.375 \cdot in$

(See Figure 2.5.2.1-1 and Ref. Appendix C4)

Moment My:

Difference $Mydiff_i := \left(Mya_i - Myb_i\right)$

Linearly interpolate at centroid of rivets

$My1 := \frac{c}{d} \cdot Mydiff \qquad My2 := \frac{d - c}{d} \cdot Mydiff$

Moment My interpolated at centroid of rivets

$My := Myb + My2$

Moment Mz:

Difference $Mzdiff_i := \left(Mza_i - Mzb_i\right)$

Linearly interpolate at centroid of rivets

$Mz1 := \frac{c}{d} \cdot Mzdiff \qquad Mz2 := \frac{d - c}{d} \cdot Mzdiff$

Moment Mz interpolated at centroid of rivets

$Mz := Mzb + Mz2$

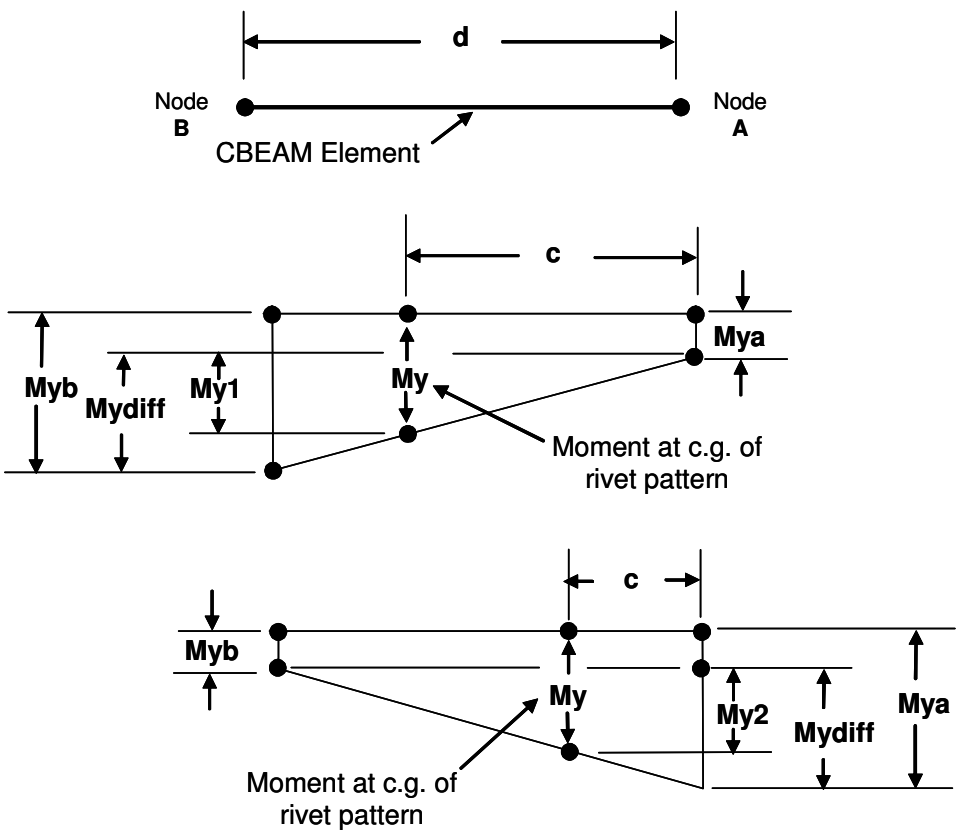

Free Body Diagram for Moment Distribution for My Interpolation
(Note: Similar moment distribution is used for Mz interpolation.)

Load in Rivets at Lower Angle Beam to Lower USS-02 to Upper USS-02 Joint:

Total Number of rivets in beam end:

$Nsps := 88$

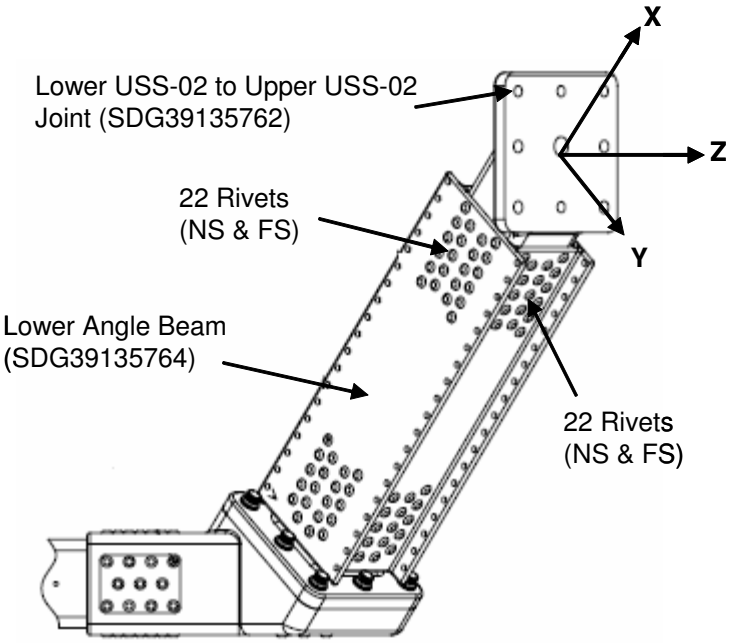

Number of rivets reacting Fz shear load:

$psz := 44$

Number of rivets reacting Fy shear loads:

$psy := 44$

Shear load/rivet due to Fy $\quad Fsry := \frac{Fya}{psy} \quad \max(Fsry) = 128 \cdot lbf$

Shear load/rivet due to Fz $\quad Fsrz := \frac{Fza}{psz} \quad \max(Fsrz) = 136.4 \cdot lbf$

Note: The Fya and Fza forces have the same magnitude as the Fyb and Fzb forces. The end A forces are used above.

Shear flow due to torsion (Ref. Bruhn section A6.8) $\quad Fsrt := \frac{Mxa}{2 \cdot Am} \quad \max(Fsrt) = 331.5 \cdot \frac{lbf}{in}$

Note: The shear load (Fsrt) is used to calculate the torsional load (Psrt) in the rivet due to the pitch on the rivet pattern. See Figure 2.5.2.1-2.

Prepared By	B. Dyer	04/10/06	Engineering and Science Contract Group *Structural Analysis Section*	File Name lwup_LAB.mcd
Revised By	G. Reyes	06/23/09		
Checked By	C. Bala			Draw ing No. SEG39135758
Title	Lower Angle Beam to Lower to Upper USS-02 Joint Rivet Analysis			

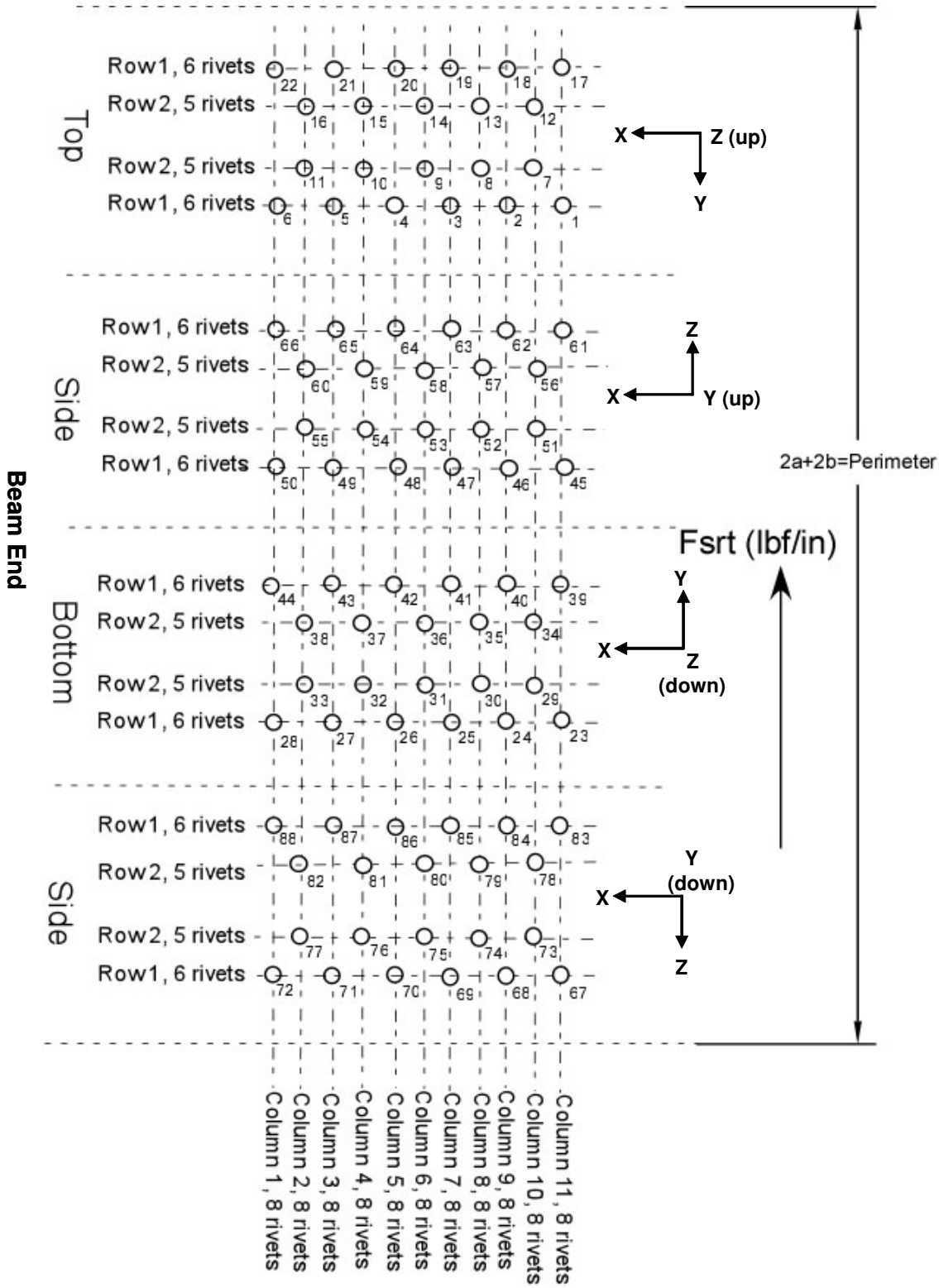

Figure 2.5.2.1-2 Layout of Rivet Patterns used to Calculate Rivet Pitch for Torsional Load

Calculation of Rivet Pitch:

It is assumed that all rivets share the torsion load equally. Therefore, each column of rivets has the same maximum load per rivet due to torsion.

Perimeter of rivet pattern $per := 2 \cdot a + 2 \cdot b$ $per = 16.2 \cdot in$

Loads in rivet due to torsion $Psrt := Fsrt \cdot \left(\frac{per}{Nsps} \right)$ $\max(Psrt) = 61.2 \cdot lbf$

Shear load in rivets due to beam axial load $Prta := \frac{Fxa}{Nsps}$ $\max(Prta) = 299.8 \cdot lbf$

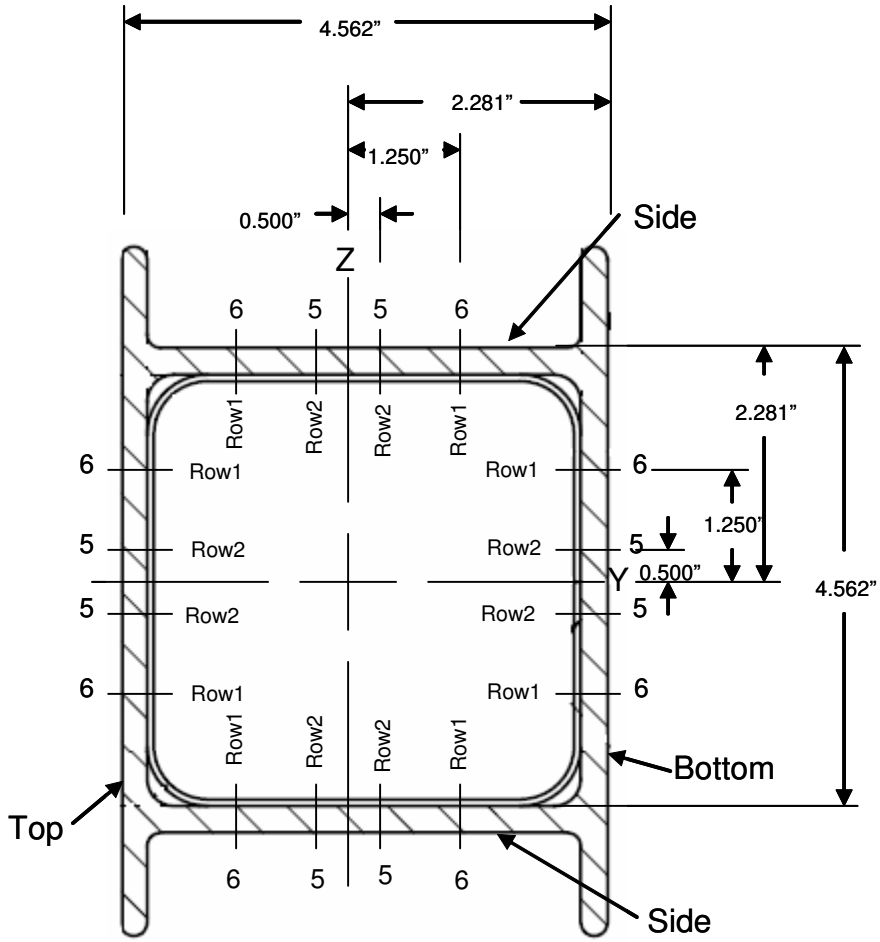

Note: Figure is for reference only.

Rivet Dimension Variables:
(Ref. SDG39135764)

$z1 := .500 \cdot in$

$z2 := 1.250 \cdot in$

$z3 := 2.281 \cdot in$

$y1 := .500 \cdot in$

$y2 := 1.250 \cdot in$

$y3 := 2.281 \cdot in$

Eccentrically Loaded Rivets due to My and Mz Moments:

Rivet Coordinate System Data

$j := 1 .. rows(coord)$ Counter for Coordinate Points

$x_j := coord_{j,2}$ Rivet Coordinate Points for x-direction

$y_j := coord_{j,3}$ Rivet Coordinate Points for y-direction

$z_j := coord_{j,4}$ Rivet Coordinate Points for z-direction

$$rivet_counter_j := \frac{coord_{j,1}}{in}$$

Prepared By	B. Dyer	04/10/06	Engineering and Science Contract Group *Structural Analysis Section*	File Name lwup_LAB.mcd
Revised By	G. Reyes	06/23/09		
Checked By	C. Bala			Draw ing No. SEG39135758
Title	Lower Angle Beam to Lower to Upper USS-02 Joint Rivet Analysis			

For Moment My:

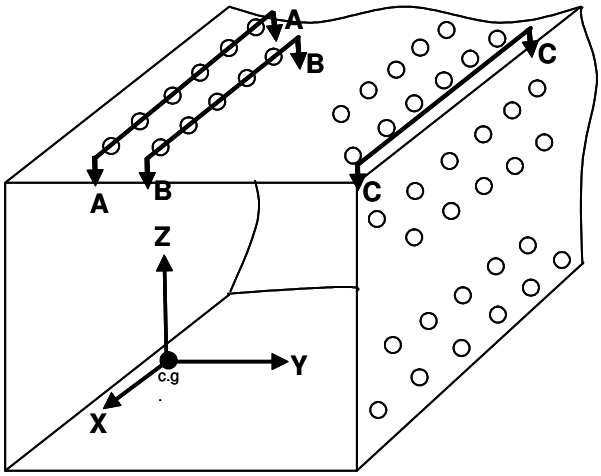

Eccentrically Loaded Rivet Pattern about My

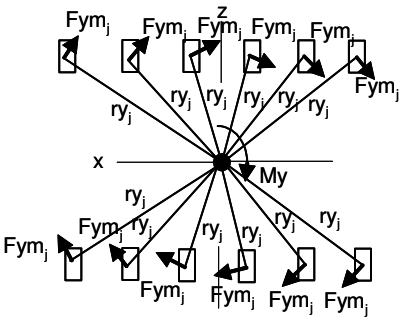

Cross-Section A-A

(Row 1, 24 rivets)

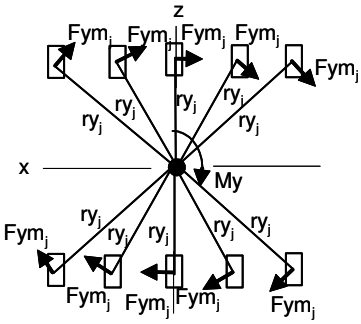

Cross-Section B-B

(Row 2, 20 rivets)

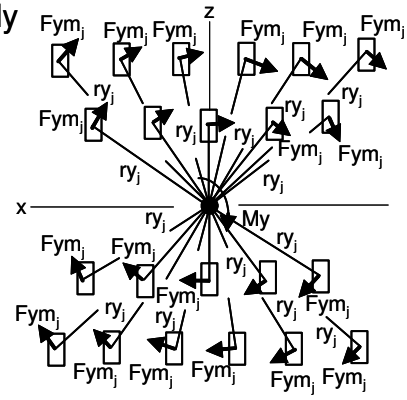

Cross-Section C-C

(Represents both sides, 44 rivets)

Note: Figure is for reference only.

$$ry_j := \left[\left(x_j\right)^2 + \left(z_j\right)^2\right]^{\frac{1}{2}}$$

Radial distance to each rivet from the centroid of the rivet pattern

$$sigry := \sum_{j=1}^{rows(coord)} \left(ry_j\right)^2$$

Sum of the radial directions for all rivets in the rivet pattern

$$\beta y_j := atan2\left(x_j, z_j\right)$$

Angle between resultant vector
and tension or shear vectors

(Note: The angle θ is defined off of the x-axis.
See below.)

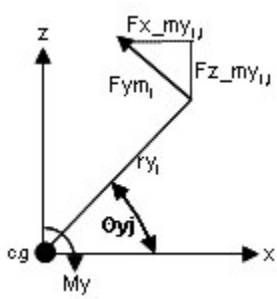

$$Fym_{i,j} := \frac{-My_i \cdot ry_j}{sigry}$$

Resultant Load at
Each Rivet

$$Fz_my_{i,j} := Fym_{i,j} \cdot \sin\left(\frac{u}{2} - \beta y_j\right)$$

z - component of Fym

$$Fx_my_{i,j} := Fym_{i,j} \cdot -\cos\left(\frac{u}{2} - \beta y_j\right)$$

x - component of Fym

Prepared By	B. Dyer	04/10/06	Engineering and Science Contract Group *Structural Analysis Section*	File Name lwup_LAB.mcd
Revised By	G. Reyes	06/23/09		
Checked By	C. Bala			Draw ing No. SEG39135758
Title	Lower Angle Beam to Lower to Upper USS-02 Joint Rivet Analysis			

For Moment Mz:

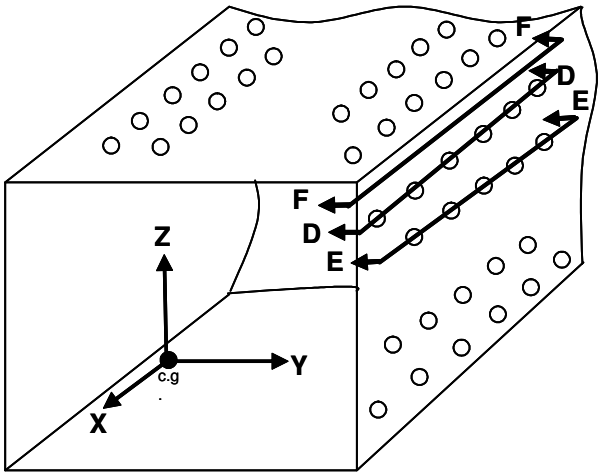

Eccentrically Loaded Rivet Pattern about Mz

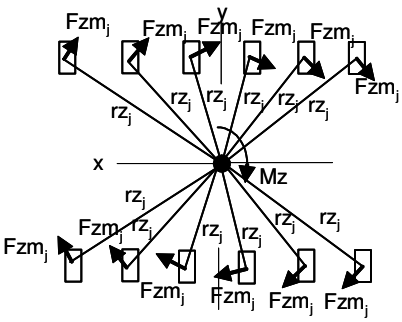

Cross-Section D-D

(Row 1, 24 rivets)

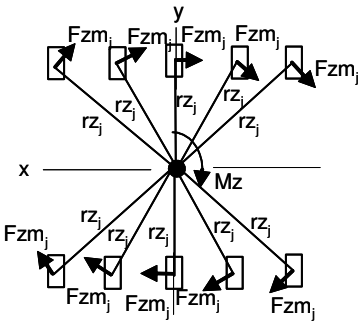

Cross-Section E-E

(Row 2, 20 rivets)

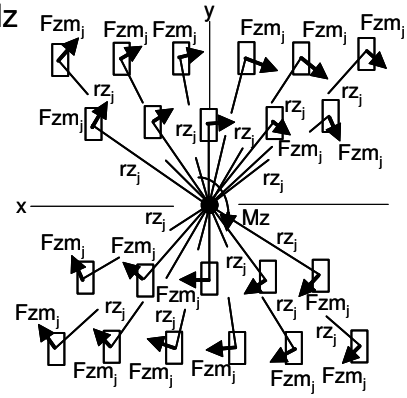

Cross-Section F-F

(Represents both sides, 44 rivets)

Note: Figure is for reference only.

$$rz_j := \left[\left(x_j\right)^2 + \left(y_j\right)^2\right]^{\frac{1}{2}}$$

Radial distance to each rivet from the centroid of the rivet pattern

$$sigrz := \sum_{j=1}^{rows(coord)} \left(rz_j\right)^2$$

Sum of the radial directions for all rivets in the rivet pattern

$$\beta z_j := atan2\left(x_j, y_j\right)$$

Angle between resultant vector and tension or shear vectors

$$Fzm_{i,j} := \frac{Mz_i \cdot rz_j}{sigrz}$$

Resultant Load at Each Rivet

(Note: The angle θ is defined off of the x-axis.
See below.)

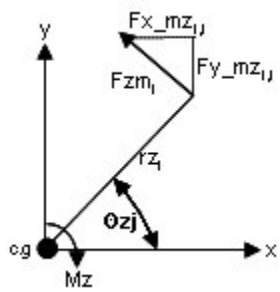

$$Fy_mz_{i,j} := Fzm_{i,j} \cdot \sin\left(\frac{u}{2} - \beta z_j\right)$$

y - component of Fzm

$$Fx_mz_{i,j} := Fzm_{i,j} \cdot -\cos\left(\frac{u}{2} - \beta z_j\right)$$

x - component of Fzm

$$F_{i,j} := \begin{cases} Fz_my_{i,j} & \text{if } rivet_counter_j \le 44 \\ Fy_mz_{i,j} & \text{otherwise} \end{cases}$$

Total Axial Load due to My and Mz Moments

$$\max\left(\overrightarrow{|F|}\right) = 269.4 \cdot lbf$$

Note: The axial loading is reacted by the beam and socket and not taken by the rivet. See section 2.2.6 for beam and socket analysis.

Total Rivet Shear Load:

$$Pt_{i,j} := \begin{cases} \sqrt{\left(Prta_i + Fx_my_{i,j} + Fx_mz_{i,j}\right)^2 + \left(Psrt_i + Fsry_i + Fy_mz_{i,j}\right)^2} & \text{if } j \le 44 \\ \sqrt{\left(Prta_i + Fx_my_{i,j} + Fx_mz_{i,j}\right)^2 + \left(Psrt_i + Fsrz_i + Fz_my_{i,j}\right)^2} & \text{otherwise} \end{cases}$$

$\max(Pt) = 601.9 \cdot lbf$

$Pt_{569,50} = 601.9 \cdot lbf$

Margin of safety for Total Rivet Load:

$$MS1t := \frac{Fs \cdot cf}{Pt \cdot FSu \cdot FF} - 1$$

$\min(MS1t) = 0.972$

(Note: Fitting Factor (FF) included for misalignment, different shim thicknesses, etc. ...)

The following will output an array for each row of rivets with element identity, load case, load, and margin of safety from left to right.

$output := augment(ID, LC, MS1t)$

$rows(output) = 768$ Number of rows in the "output" array

$cols(output) = 90$ Number of columns in the "output" array

The "output" array is then searched for the location of the minimum margin. The match function is used to locate the minimum margin of safety and the element identity, load case, rivet location, and maximum load are pulled from the array.

$$match(\min(MS1t), MS1t) = \begin{bmatrix} 569 \\ 50 \end{bmatrix}$$

$min_LC := output_{569,2}$ Load Case for Minimum Margin of Safety

$min_ID := output_{569,1}$ Element ID for Minimum Margin of Safety

Rivet number 50 is the rivet with the minimum margin of safety of 0.972.

Minimum Margin of Safety:

Minimum Margin of Safety	$\min(MS1t) = 0.972$
Element ID for Minimum Margin of Safety	$min_ID = 1604$
Load Case for Minimum Margin of Safety	$min_LC = 4015$
Maximum Rivet Load for Minimum Margin of Safety	$\max(Pt) = 601.9 \cdot lbf$
Rivets with Minimum Margin of Safety	Rivet number 50 (See figure 2.5.2.1 - 2 for rivet location)

Bearing on Hole Wall:

Hole diameter $dh := 0.257 \cdot in$ (Ref. SEG39135726, Flag Note 2)

Tube thickness $tp := 0.25 \cdot in$ (Ref. SDG39135764)

Bearing area $Ab := dh \cdot tp$ $Ab = 0.064 \cdot in^2$

Max. load per rivet $max(Pt) = 601.9 \cdot lbf$

Max. bearing stress $b := \frac{max(Pt)}{Ab}$ $b = 9367.4 \cdot psi$

Margin of safety $MSb := \frac{Fbru \cdot cb}{b \cdot FSu \cdot FF} - 1$ $MSb = 6.26$

Shear tear out:

Edge distance $e := 0.500 \cdot in$ (Ref. SDG39135764)

Note: Using this e is conservative, since actual rivet force is in general at some angle.

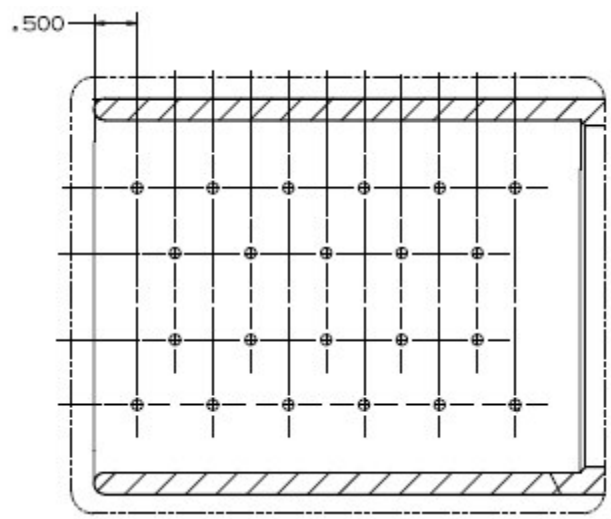

Hole diameter $dh := 0.257 \cdot in$

E over D ratio $\frac{e}{dh} = 1.946$

Tube thickness $tp := 0.25 \cdot in$

Shear out area $As := 2 \cdot \left(e - \frac{dh}{2} \cdot \cos(40 \cdot deg) \right) \cdot tp$ $As = 0.2008 \cdot in^2$

Max. load per rivet $max(Pt) = 601.9 \cdot lbf$

Max. shear tear out stress $=s := \frac{max(Pt)}{As}$ $=s = 2997.6 \cdot psi$

Margin of safety $MSsh := \frac{Fsu \cdot cd}{=s \cdot FSu \cdot FF} - 1$ $MSsh = 6.18$

2.5.2.2 Lower Angle Beam to Lower Angle Flange Beam Flange

Prepared By	B. Dyer	04/12/06	Engineering and Science Contract Group *Structural Analysis Section*	File Name LAB_flange.mcd
Revised By	G. Reyes	06/23/09		
Checked By	C. Bala			Draw ing No. SEG39135758
Title	Lower Angle Beam to Lower to Lower Angle Beam Flange Rivet Analysis			

Lower Angle Beam to Lower Angle Beam Flange Rivet Analysis

The Lower Angle Beam SDG39135764 connects to the Lower Angle Beam Flange SDG39135767 in 4 locations. The lower angle beam is fastened to the lower angle beam flange, with NAS1398DFC, 0.25 in rivets. The lower angle beam flange is machined from 7050-T7451 plate and the lower angle beam is extruded from 7075-T73511. CBEAM elements 1601, 1606, 1611, and 1616 in the loads model represents the portion of the lower angle beam flange that interfaces with the lower angle beam. The rivet pattern centroid is 2.615 in from end A of the beam element. Element length is 4.885 in. See Appendix C4 for AMS Rivet Pattern Location Table.

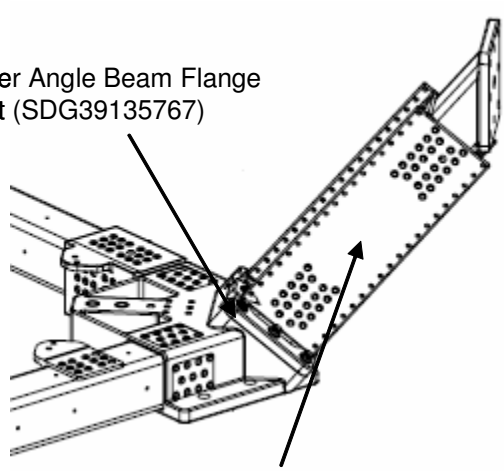

Lower USS-02 Assembly (SEG39135758)

Material Strength for Rivets:

Rivets are NAS1398 type D, 0.25 in. blind protruding head 2017 Aluminum rivets

(Ref. NAS1400, sheet 5)

Max. rivet shear strength $Fs := 1970 \cdot lbf$

Material Strength for Lower Angle Beam:

Tube material is extruded 7075-T73511 with e/D=2.0

(Ref. MIL-HDBK-5J, Table 3.7.6.0(g2))

Allowable bearing strength $Fbru := 119000 \cdot psi$

Allowable shear strength $Fsu := 35000 \cdot psi$

Factors of safety:

Ultimate Factor of Safety: $FSu := 1.4$

Fitting Factor: $FF := 1.15$

Temperature:

Maximum Temperature $Tmax := 150 \cdot deg$

(Ref. Appendix C2, AMS-02 Temperature Table)

Temperature Correction Factor (For Fs) $cf := .97$

(Ref. Appendix C13)

Temperature Correction Factor (For Fsu) $cd := .99$

(Ref. MIL-HDBK-5J, Figure 3.7.6.1.2(b))

Temperature Correction Factor (For Fbru) $cb := .92$

(Ref. MIL-HDBK-5J, Figure 3.7.6.1(a))

Loads model 2-06 was run in NASTRAN for 192 load cases. Beam element forces were recovered, and given in the data file "LABtolowerflange.dat" for elements 1601, 1606, 1611, and 1616.

$data := READPRN("LABtolowerflange.dat")$ $ORIGIN := 1$ $i := 1 .. rows(data)$

Loads from Beam End A:

Axial Load $Fxa_i := data_{i,7} \cdot lbf$

Shear in Y axis $Fya_i := data_{i,5} \cdot lbf$

Shear in Z axis $Fza_i := data_{i,6} \cdot lbf$

Torsion $Mxa_i := data_{i,8} \cdot in \cdot lbf$

Moment about Y axis $Mya_i := -data_{i,4} \cdot in \cdot lbf$

Moment about Z axis $Mza_i := data_{i,3} \cdot in \cdot lbf$

$ID_i := data_{i,1}$ $LC_i := data_{i,2}$

Loads from Beam End B:

Axial Load $Fxb_i := data_{i,13} \cdot lbf$

Shear in Y axis $Fyb_i := data_{i,11} \cdot lbf$

Shear in Z axis $Fzb_i := data_{i,12} \cdot lbf$

Torsion $Mxb_i := data_{i,14} \cdot in \cdot lbf$

Moment about Y axis $Myb_i := -data_{i,10} \cdot in \cdot lbf$

Moment about Z axis $Mzb_i := data_{i,9} \cdot in \cdot lbf$

Beam Section Properties:

Thickness of tube $t := 0.25 \cdot in$ (Ref. SDG39135764)

Width of tube $a := 4.062 \cdot in$ (Ref. SDG39135764)

Depth of tube $b := 4.062 \cdot in$ (Ref. SDG39135764)

Enclosed area of mean width and mean height $Am := (a - t) \cdot (b - t)$ $Am = 14.53 \cdot in^2$

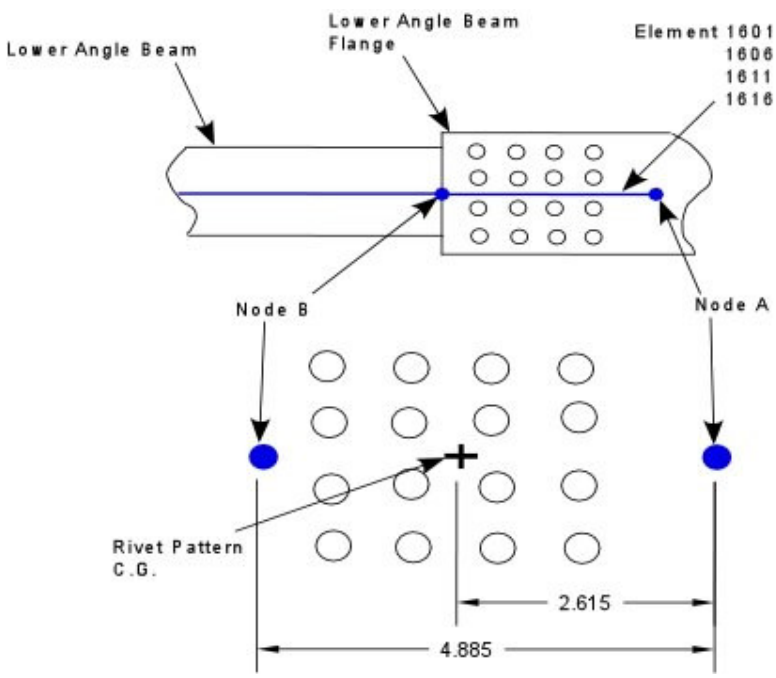

Figure 2.5.2.2-1 Rivet Pattern Dimensions for Beam Element Ends A and B.

Note: Figure is for reference only.

Bending Moment Interpolation:

NASTRAN gives beam moments at ends A and B of the beam element. The center of gravity of the rivet pattern falls between nodes A and B, therefore, the moment at the center of the rivet pattern needs to be interpolated.

Distance from end A to the center of the rivet pattern $c := 2.615 \cdot in$

Total length of beam element $d := 4.885 \cdot in$

(See Figure 2.5.2.2-1 and Ref. Appendix C4)

Moment My:

Difference $Mydiff_i := \left(Mya_i - Myb_i\right)$

Linearly interpolate at centroid of rivets

$$My1 := \frac{c}{d} \cdot Mydiff \qquad My2 := \frac{d - c}{d} \cdot Mydiff$$

Moment My interpolated at centroid of rivets

$$My := Myb + My2$$

Moment Mz:

Difference $Mzdiff_i := \left(Mza_i - Mzb_i\right)$

Linearly interpolate at centroid of rivets

$$Mz1 := \frac{c}{d} \cdot Mzdiff \qquad Mz2 := \frac{d - c}{d} \cdot Mzdiff$$

Moment Mz interpolated at centroid of rivets

$$Mz := Mzb + Mz2$$

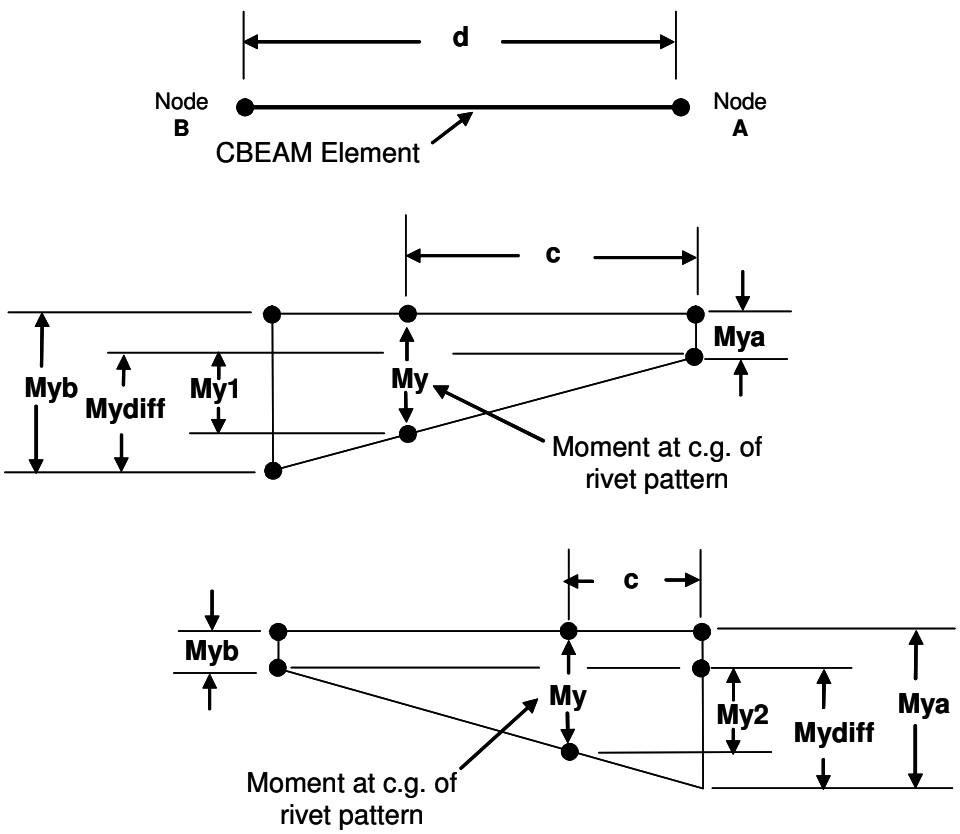

Free Body Diagram for Moment Distribution for My Interpolation
(Note: Similar moment distribution is used for Mz interpolation.)

Load in Rivets at Lower Angle Beam to Lower Angle Beam Flange:

Total Number of rivets in beam end:

$Nsps := 80$

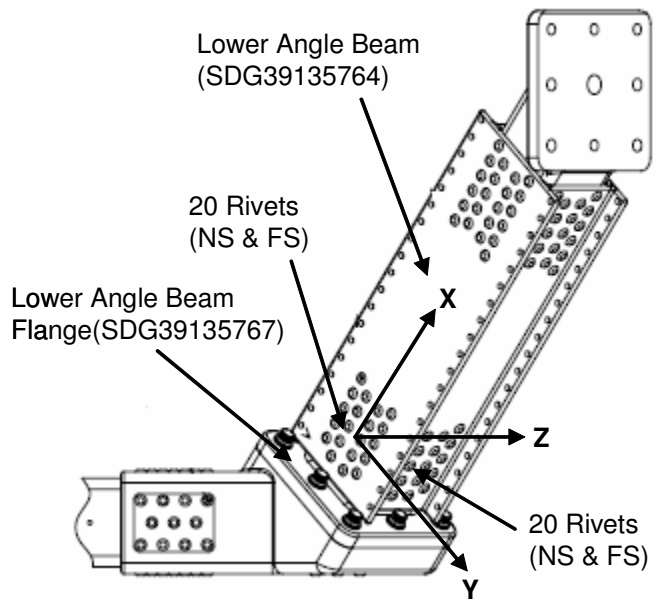

Number of rivets reacting Fz shear load:

$psz := 40$

Number of rivets reacting Fy shear loads:

$psy := 40$

Shear load/rivet due to Fy $\quad Fsry := \frac{Fya}{psy} \quad \max(Fsry) = 128.7 \cdot lbf$

Shear load/rivet due to Fz $\quad Fsrz := \frac{Fza}{psz} \quad \max(Fsrz) = 149.4 \cdot lbf$

Note: The Fya and Fza forces have the same magnitude as the Fyb and Fzb forces. The end A forces are used above.

Shear flow due to torsion
(Ref. Bruhn section A6.8) $\quad Fsrt := \frac{Mxa}{2 \cdot Am} \quad \max(Fsrt) = 322.6 \cdot \frac{lbf}{in}$

Note: The shear load (Fsrt) is used to calculate the torsional load (Psrt) in the rivet due to the pitch on the rivet pattern. See Figure 2.5.2.2-2.

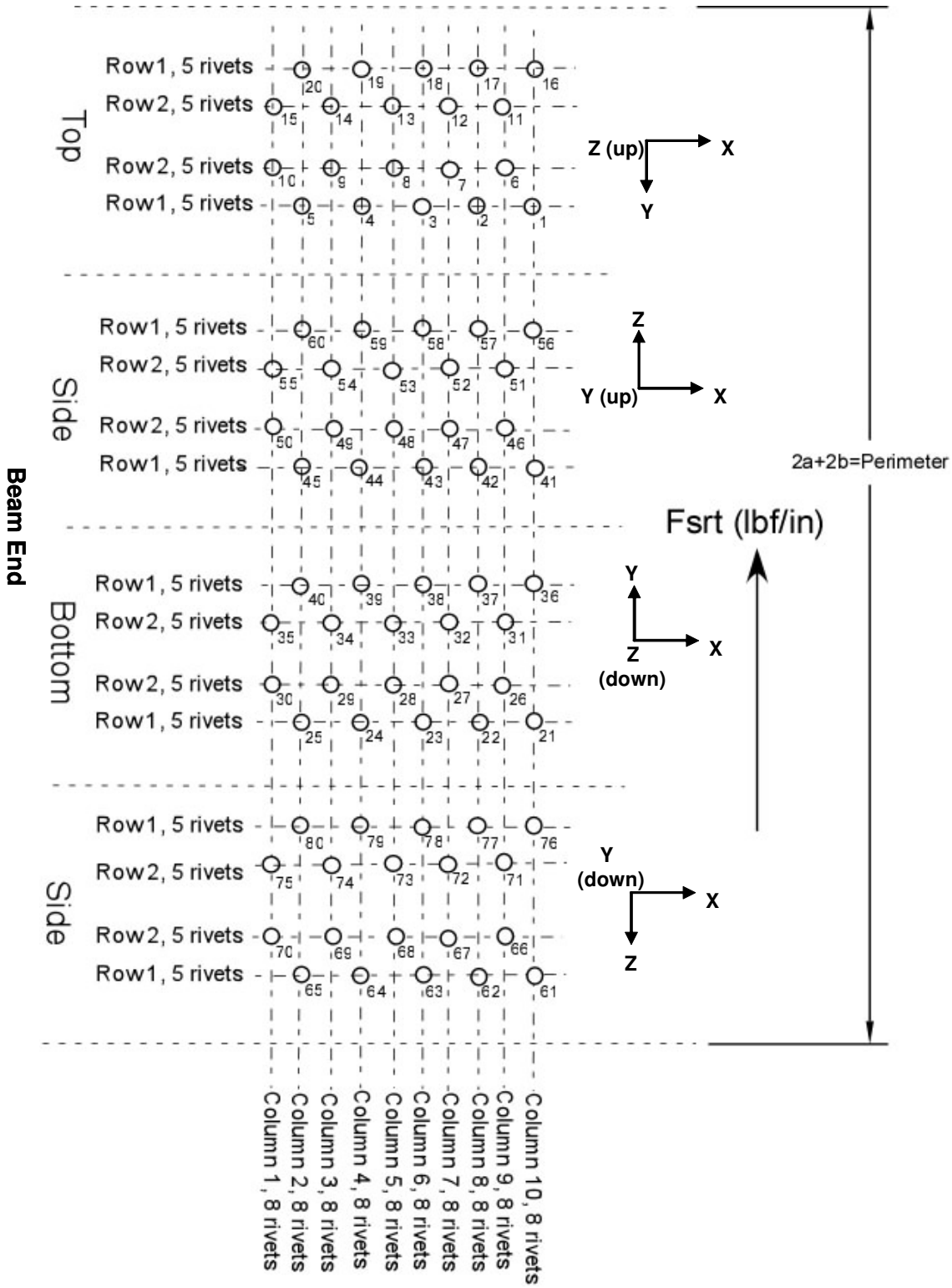

Figure 2.5.2.2-2 Layout of Rivet Patterns used to Calculate Rivet Pitch for Torsional Load

Calculation of Rivet Pitch:

It is assumed that all rivets share the torsion load equally. Therefore, each column of rivets has the same maximum load per rivet due to torsion.

Perimeter of rivet pattern $per := 2 \cdot a + 2 \cdot b$ $per = 16.2 \cdot in$

Loads in rivet due to torsion $Psrt := Fsrt \cdot \left(\frac{per}{Nsps} \right)$ $\max(Psrt) = 65.5 \cdot lbf$

Shear load in rivets due to beam axial load $Prta := \frac{Fxa}{Nsps}$ $\max(Prta) = 326.8 \cdot lbf$

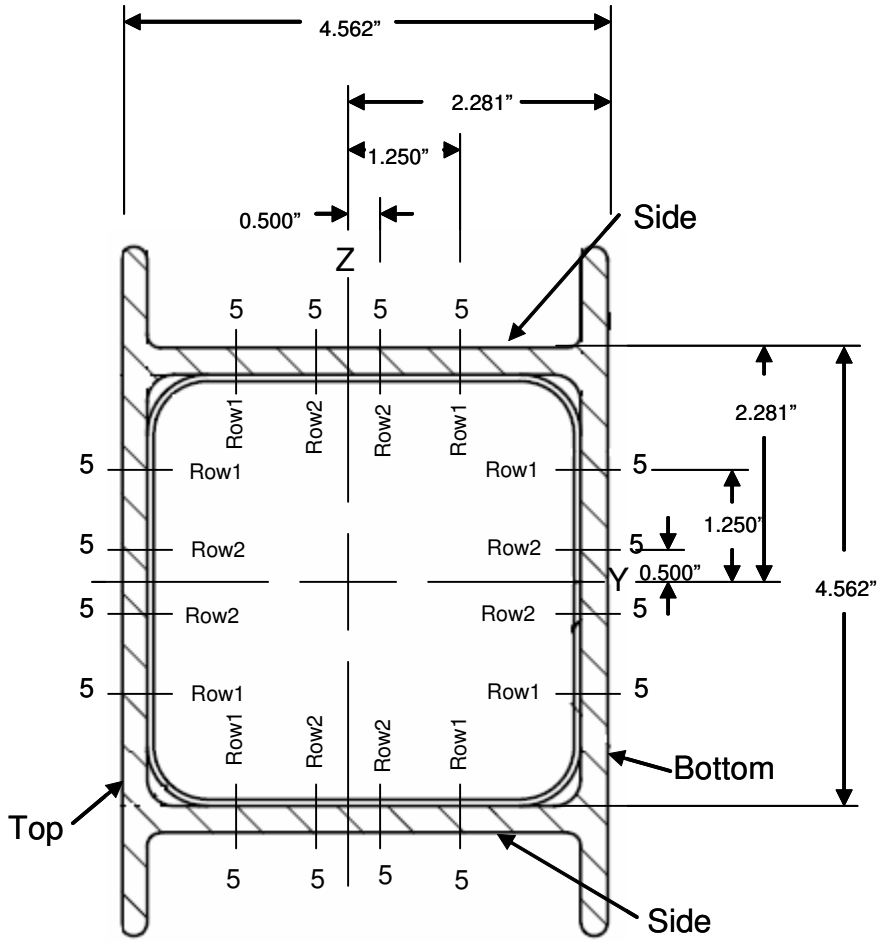

Note: Figure is for reference only.

Rivet Dimension Variables:
(Ref. SDG39135764)

$z1 := .500 \cdot in$

$z2 := 1.250 \cdot in$

$z3 := 2.281 \cdot in$

$y1 := .500 \cdot in$

$y2 := 1.250 \cdot in$

$y3 := 2.281 \cdot in$

Eccentrically Loaded Rivets due to My and Mz Moments:

Rivet Coordinate System Data

$j := 1 .. rows(coord)$ Counter for Coordinate Points

$x_j := coord_{j,2}$ Rivet Coordinate Points for x-direction

$y_j := coord_{j,3}$ Rivet Coordinate Points for y-direction

$z_j := coord_{j,4}$ Rivet Coordinate Points for z-direction

$$rivet_counter_j := \frac{coord_{j,1}}{in}$$

Prepared By	B. Dyer	04/12/06	Engineering and Science Contract Group *Structural Analysis Section*	File Name LAB_flange.mcd
Revised By	G. Reyes	06/23/09		
Checked By	C. Bala			Draw ing No. SEG39135758
Title	Lower Angle Beam to Lower to Lower Angle Beam Flange Rivet Analysis			

For Moment My:

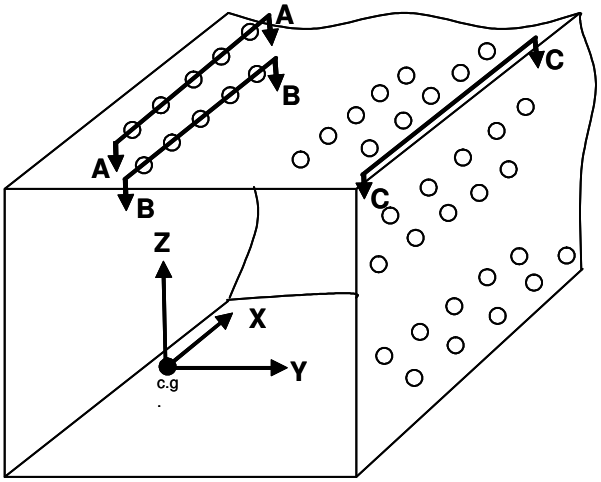

Eccentrically Loaded Rivet Pattern about My

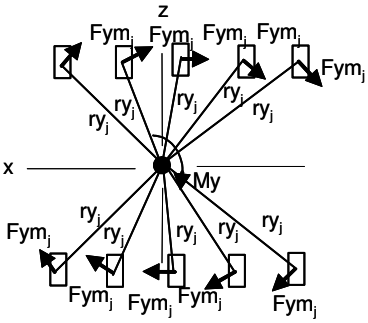

Cross-Section A-A

(Row 1, 20 rivets)

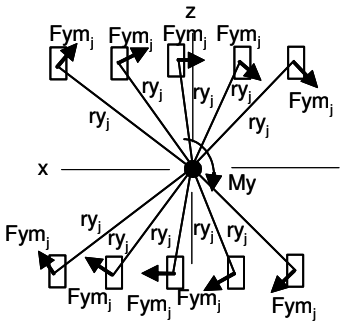

Cross-Section B-B

(Row 2, 20 rivets)

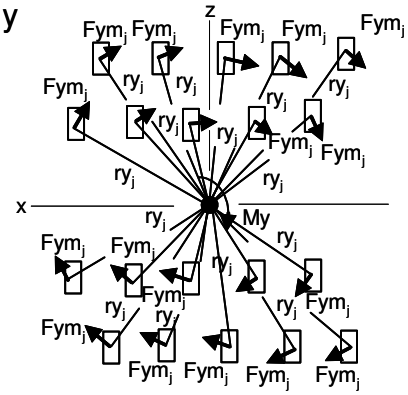

Cross-Section C-C

(Represents both sides, 40 rivets)

Note: Figure is for reference only.

$$ry_j := \left[\left(x_j\right)^2 + \left(z_j\right)^2\right]^{\frac{1}{2}}$$

Radial distance to each rivet from the centroid of the rivet pattern

$$sigry := \sum_{j=1}^{rows(coord)} \left(ry_j\right)^2$$

Sum of the radial directions for all rivets in the rivet pattern

$$\beta y_j := atan2\left(x_j, z_j\right)$$

Angle between resultant vector
and tension or shear vectors

(Note: The angle θ is defined off of the x-axis.
See below.)

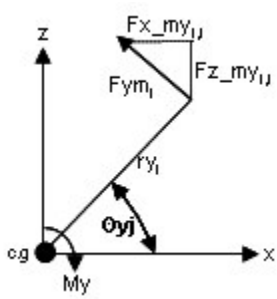

$$Fym_{i,j} := \frac{My_i \cdot ry_j}{sigry}$$

Resultant Load at
Each Rivet

$$Fz_my_{i,j} := Fym_{i,j} \cdot \sin\left(\frac{u}{2} - \beta y_j\right)$$

z - component of Fym

$$Fx_my_{i,j} := Fym_{i,j} \cdot -\cos\left(\frac{u}{2} - \beta y_j\right)$$

x - component of Fym

Prepared By	B. Dyer	04/12/06	Engineering and Science Contract Group *Structural Analysis Section*	File Name LAB_flange.mcd
Revised By	G. Reyes	06/23/09		
Checked By	C. Bala			Draw ing No. SEG39135758
Title	Lower Angle Beam to Lower to Lower Angle Beam Flange Rivet Analysis			

For Moment Mz:

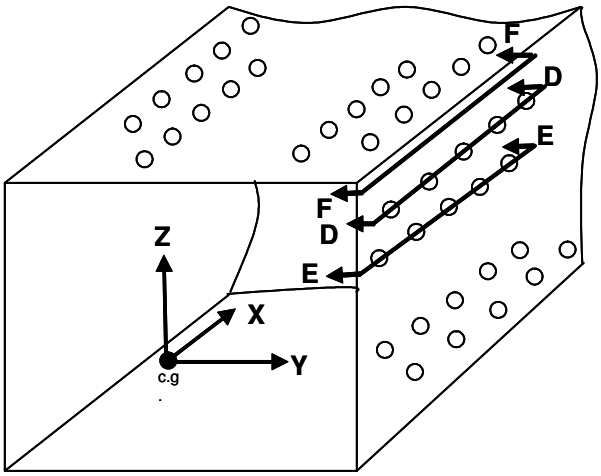

Eccentrically Loaded Rivet Pattern about Mz

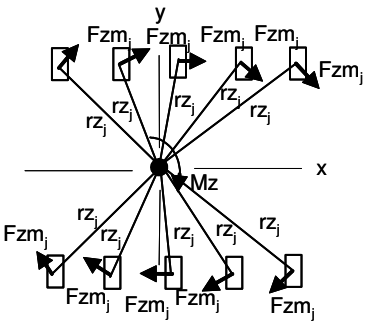

Cross-Section D-D

(Row 1, 20 rivets)

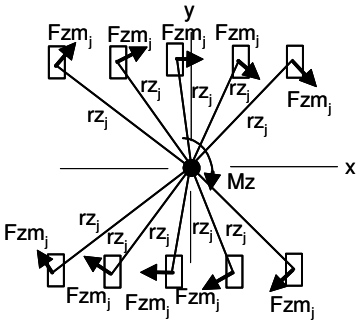

Cross-Section E-E

(Row 2, 20 rivets)

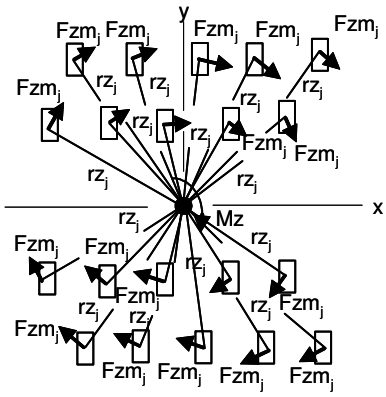

Cross-Section F-F

(Represents both sides, 40 rivets)

Note: Figure is for reference only.

$$rz_j := \left[\left(x_j\right)^2 + \left(y_j\right)^2\right]^{\frac{1}{2}}$$

Radial distance to each rivet from the centroid of the rivet pattern

$$sigrz := \sum_{j=1}^{rows(coord)} \left(rz_j\right)^2$$

Sum of the radial directions for all rivets in the rivet pattern

$$\beta z_j := atan2\left(x_j, y_j\right)$$

Angle between resultant vector and tension or shear vectors

$$Fzm_{i,j} := \frac{(-Mz)_i \cdot rz_j}{sigrz}$$

Resultant Load at Each Rivet

(Note: The angle θ is defined off of the x-axis.
See below.)

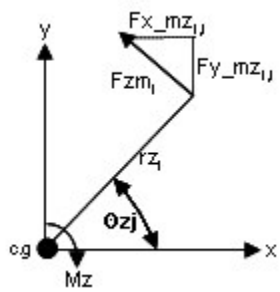

$$Fy_mz_{i,j} := Fzm_{i,j} \cdot \sin\left(\frac{u}{2} - \beta z_j\right)$$

y - component of Fzm

$$Fx_mz_{i,j} := Fzm_{i,j} \cdot -\cos\left(\frac{u}{2} - \beta z_j\right)$$

x - component of Fzm

$$F_{i,j} := \begin{cases} Fz_my_{i,j} & \text{if } rivet_counter_j \le 40 \\ Fy_mz_{i,j} & \text{otherwise} \end{cases}$$

Total Axial Load due to My and Mz Moments

$$\max\left(\overrightarrow{|F|}\right) = 468 \cdot lbf$$

Note: The axial loading is reacted by the beam and socket and not taken by the rivet. See section 2.2.6 for beam and socket analysis.

Total Rivet Shear Load:

$$Pt_{i,j} := \begin{cases} \sqrt{\left(Prta_i + Fx_my_{i,j} + Fx_mz_{i,j}\right)^2 + \left(Psrt_i + Fsry_i + Fy_mz_{i,j}\right)^2} & \text{if } j \le 40 \\ \sqrt{\left(Prta_i + Fx_my_{i,j} + Fx_mz_{i,j}\right)^2 + \left(Psrt_i + Fsrz_i + Fz_my_{i,j}\right)^2} & \text{otherwise} \end{cases}$$

$\max(Pt) = 835.1 \cdot lbf$

$Pt_{569,20} = 835.1 \cdot lbf$

Margin of safety for Total Rivet Load:

$$MS1t := \frac{Fs \cdot cf}{Pt \cdot FSu \cdot FF} - 1$$

$\min(MS1t) = 0.421$

(Note: Fitting Factor (FF) included for misalignment, different shim thicknesses, etc. ...)

The following will output an array for each row of rivets with element identity, load case, load, and margin of safety from left to right.

$output := augment(ID, LC, MS1t)$

$rows(output) = 768$ Number of rows in the "output" array

$cols(output) = 82$ Number of columns in the "output" array

The "output" array is then searched for the location of the minimum margin. The match function is used to locate the minimum margin of safety and the element identity, load case, rivet location, and maximum load are pulled from the array.

$$match(\min(MS1t), MS1t) = \begin{bmatrix} 569 \\ 20 \end{bmatrix}$$

$min_LC := output_{569,2}$ Load Case for Minimum Margin of Safety

$min_ID := output_{569,1}$ Element ID for Minimum Margin of Safety

Rivet number 20 is the rivet with the minimum margin of safety of 0.421

Minimum Margin of Safety:

Minimum Margin of Safety	$\min(MS1t) = 0.421$
Element ID for Minimum Margin of Safety	$min_ID = 1601$
Load Case for Minimum Margin of Safety	$min_LC = 4015$
Maximum Rivet Load for Minimum Margin of Safety	$\max(Pt) = 835.1 \cdot lbf$
Rivets with Minimum Margin of Safety	Rivet number 20 (See figure 2.5.2.2 - 2 for rivet location)

Prepared By	B. Dyer	04/12/06	Engineering and Science Contract Group *Structural Analysis Section*	File Name LAB_flange.mcd
Revised By	G. Reyes	06/23/09		
Checked By	C. Bala			Draw ing No. SEG39135758
Title	Lower Angle Beam to Lower to Lower Angle Beam Flange Rivet Analysis			

Bearing on Hole Wall:

Hole diameter $dh := 0.257 \cdot in$ (Ref. SEG39135726, Flag Note 2)

Tube thickness $tp := 0.25 \cdot in$ (Ref. SDG39135764)

Bearing area $Ab := dh \cdot tp$ $Ab = 0.064 \cdot in^2$

Max. load per rivet $max(Pt) = 835.1 \cdot lbf$

Max. bearing stress $b := \frac{max(Pt)}{Ab}$ $b = 12998.4 \cdot psi$

Margin of safety $MSb := \frac{Fbru \cdot cb}{b \cdot FSu \cdot FF} - 1$ $MSb = 4.23$

Shear tear out:

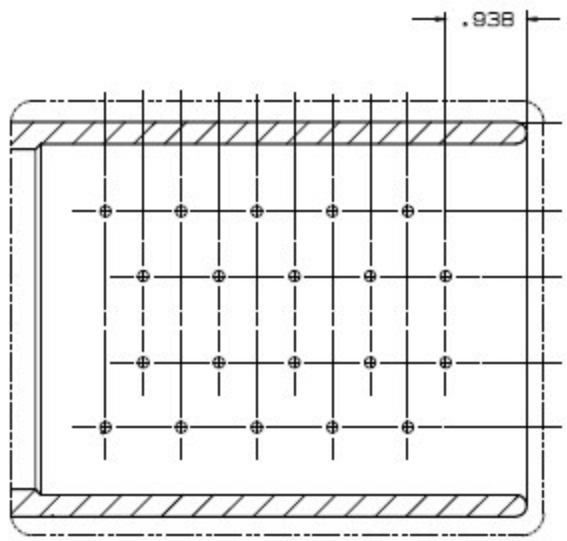

Edge distance $e := 0.938 \cdot in$ (Ref. SDG39135764)

Note: Using this e is conservative, since actual rivet force is in general at some angle.

Hole diameter $dh := 0.257 \cdot in$

E over D ratio $\frac{e}{dh} = 3.65$

Tube thickness $tp := 0.25 \cdot in$

Shear out area $As := 2 \cdot \left(e - \frac{dh}{2} \cdot \cos(40 \cdot deg) \right) \cdot tp$ $As = 0.42 \cdot in^2$

Max. load per rivet $max(Pt) = 835.1 \cdot lbf$

Max. shear tear out stress $=s := \frac{max(Pt)}{As}$ $=s = 1989.5 \cdot psi$

Margin of safety $MSsh := \frac{Fsu \cdot cd}{=s \cdot FSu \cdot FF} - 1$ $MSsh = 9.82$

2.5.2.3 EMC Box Tubes to Centerbody Joints

EMC Box Tube to Centerbody Joint Rivet Analysis

The base of the lower USS is square with a centerbody at each corner and tubes connecting them at 8 joints. The centerbody box joints SDG39135759-001 and -002 are machined from 7050-T7451 plate. They are fastened to the EMC box tubes SDG39135761-301 and-303, with NAS1398M8, 0.25 in monel rivets. The tubes can only be riveted to the joint on three sides, the top, bottom and one side of the tubes. There are 33 rivets per side on each centerbody joint.

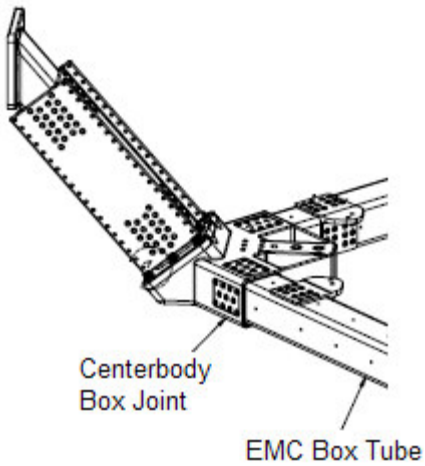

Figure 2.5.2.3-1 - EMC Box Tube to Centerbody Box Joint

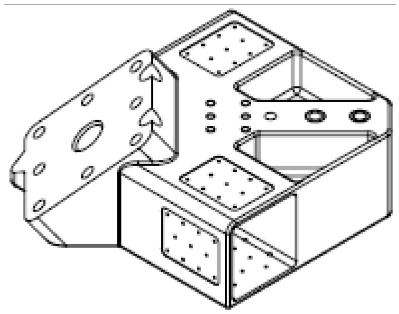

Figure 2.5.2.3-2 - Centerbody Box Joint with Rivet Location

Material Strength for Rivets:

Rivets are NAS1398M8, 0.25 in. blind protruding head locked spindle Monel rivets

(Ref. NAS1400, sheet 5)

Max. rivet shear strength $Fs := 2840 \cdot lbf$

Material Strength for EMC Box Tube:

Tube material is extruded 7075-T73511 with e/D=2.0

(Ref. MIL-HDBK-5J, Table 3.7.6.0(g2))

Allowable bearing strength $Fbru := 119000 \cdot psi$

Allowable shear strength $Fsu := 35000 \cdot psi$

Temperature:

Maximum Temperature (launch) $Tlaunch := 120 \cdot deg$

Maximum Temperature (abort) $Tabort := 150 \cdot deg$

(Ref. Appendix C2, AMS-02 Temperature Table)

Factors of safety:

Ultimate Factor of Safety: $FSu := 1.4$

Fitting Factor: $FF := 1.15$

Loads model 2-06 was run in NASTRAN for 128 load cases. These 128 load cases include launch and abort landing. Beam element forces were recovered, and given in the input file "emcboxtoLowerCBJ2.dat" for elements 1501, 1503, 1504, 1508, 1509, 1513, 1514, 1517.

Beam Section Properties: (Ref. SDG39135761)

Thickness of tube $t := 0.25 \cdot in$

Width of tube $a := 4.0 \cdot in$

Depth of tube $b := 4.0 \cdot in$

Enclosed area of mean width and mean height $Am := (a - t) \cdot (b - t)$ $Am = 14.06 \cdot in^2$

Applies for Elements: 1501
1503
1504
1508
1509
1513
1514
1517

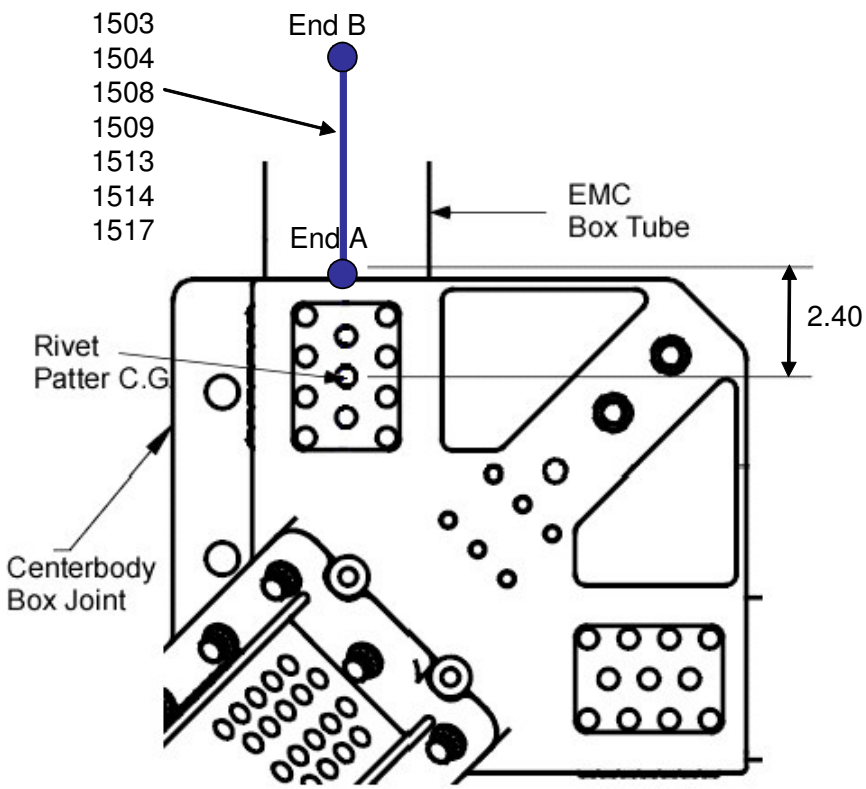

Figure 2.5.2.3-3 Rivet Pattern Dimensions for Beam Element End A.

Note: Figure is for reference only.

Note: The A and B ends of the beam elements that lay inside of the socket of the Centerbody Box Joint are tied to RBE elements that are "spidered" out to shell elements. This modeling technique stiffens the beam element inside of the socket allowing for lower loads at ends A and B. Therefore, loads are taken from end A of elements 1501, 1503, 1504, 1508, 1509, 1513, 1514, and 1517. A moment extrapolation from End A is performed to locate the moments at the center of the rivet pattern.

Reading in Data File:

$data := READPRN(\text{"emcboxtoLowerCBJ2.dat"})$ $ORIGIN := 1$ $i := 1 .. rows(data)$

Loads from Beam End A:

Axial Load

$$Fxa_i := \begin{cases} -data_{i,7} & \text{if } data_{i,1} = 1501 \\ -data_{i,7} & \text{if } data_{i,1} = 1503 \\ -data_{i,7} & \text{if } data_{i,1} = 1504 \\ -data_{i,7} & \text{if } data_{i,1} = 1508 \\ -data_{i,7} & \text{if } data_{i,1} = 1509 \\ -data_{i,7} & \text{if } data_{i,1} = 1513 \\ -data_{i,7} & \text{if } data_{i,1} = 1514 \\ -data_{i,7} & \text{if } data_{i,1} = 1517 \end{cases} \cdot lbf$$

Shear in Y axis

$$Fya_i := \begin{cases} -data_{i,5} & \text{if } data_{i,1} = 1501 \\ -data_{i,5} & \text{if } data_{i,1} = 1503 \\ data_{i,5} & \text{if } data_{i,1} = 1504 \\ data_{i,5} & \text{if } data_{i,1} = 1508 \\ data_{i,5} & \text{if } data_{i,1} = 1509 \\ data_{i,5} & \text{if } data_{i,1} = 1513 \\ -data_{i,5} & \text{if } data_{i,1} = 1514 \\ -data_{i,5} & \text{if } data_{i,1} = 1517 \end{cases} \cdot lbf$$

Shear in Z axis

$$Fza_i := \begin{cases} data_{i,6} & \text{if } data_{i,1} = 1501 \\ data_{i,6} & \text{if } data_{i,1} = 1503 \\ -data_{i,6} & \text{if } data_{i,1} = 1504 \\ -data_{i,6} & \text{if } data_{i,1} = 1508 \\ -data_{i,6} & \text{if } data_{i,1} = 1509 \\ -data_{i,6} & \text{if } data_{i,1} = 1513 \\ data_{i,6} & \text{if } data_{i,1} = 1514 \\ data_{i,6} & \text{if } data_{i,1} = 1517 \end{cases} \cdot lbf$$

Torsion

$$Mxa_i := \begin{cases} -data_{i,8} & \text{if } data_{i,1} = 1501 \\ -data_{i,8} & \text{if } data_{i,1} = 1503 \\ -data_{i,8} & \text{if } data_{i,1} = 1504 \\ -data_{i,8} & \text{if } data_{i,1} = 1508 \\ -data_{i,8} & \text{if } data_{i,1} = 1509 \\ -data_{i,8} & \text{if } data_{i,1} = 1513 \\ -data_{i,8} & \text{if } data_{i,1} = 1514 \\ -data_{i,8} & \text{if } data_{i,1} = 1517 \end{cases} \cdot in \cdot lbf$$

Moment about Y axis

$$Mya_i := \begin{cases} -data_{i,4} & \text{if } data_{i,1} = 1501 \\ -data_{i,4} & \text{if } data_{i,1} = 1503 \\ data_{i,4} & \text{if } data_{i,1} = 1504 \\ data_{i,4} & \text{if } data_{i,1} = 1508 \\ data_{i,4} & \text{if } data_{i,1} = 1509 \\ data_{i,4} & \text{if } data_{i,1} = 1513 \\ -data_{i,4} & \text{if } data_{i,1} = 1514 \\ -data_{i,4} & \text{if } data_{i,1} = 1517 \end{cases} \cdot in \cdot lbf$$

Moment about Z axis

$$Mza_i := \begin{cases} data_{i,3} & \text{if } data_{i,1} = 1501 \\ data_{i,3} & \text{if } data_{i,1} = 1503 \\ -data_{i,3} & \text{if } data_{i,1} = 1504 \\ -data_{i,3} & \text{if } data_{i,1} = 1508 \\ -data_{i,3} & \text{if } data_{i,1} = 1509 \\ -data_{i,3} & \text{if } data_{i,1} = 1513 \\ data_{i,3} & \text{if } data_{i,1} = 1514 \\ data_{i,3} & \text{if } data_{i,1} = 1517 \end{cases} \cdot in \cdot lbf$$

$ycg := 0.667 \cdot in$ y direction offset due to unsymmetrical rivet pattern

$Mxa_i := Mxa_i + Fza_i \cdot ycg$ Total Torsional Moment due to y direction offset

Element Identification: $ID_i := data_{i,1}$

Load Case Number: $LC_i := data_{i,2}$

Temperature Correction Factor

Temperature Correction Factor (For Fs)
(Ref. Appendix C5)

$$cf_i := \begin{cases} .99 & \text{if } LC_i \le 1064 \\ .98 & \text{otherwise} \end{cases}$$

Temperature Correction Factor (For Fsu)
(Ref. MIL-HDBK-5J, Figure 3.7.6.1.2(b))

$cd := .99$

Temperature Correction Factor (For Fbru)
(Ref. MIL-HDBK-5J, Figure 3.7.6.1(a))

$cb := .92$

Extrapolation of Moments:

A moment extrapolation from End A is performed to locate moments at the center of the rivet pattern.

Distance from beam end A to the center of the rivet pattern: $dist := 2.40 \cdot in$ (Ref. Appendix C4)

Extrapolation of My Moment $My_i := Mya_i + Fza_i \cdot dist$

Extrapolation of Mz Moment $Mz_i := Mza_i + Fya_i \cdot dist$

Load in Rivets at EMC Box Tube to Centerbody Box Joint:

Total Number of rivets in beam end:

$Nsps := 33$

Number of rivets reacting Fz shear load:

$psz := 11$

Number of rivets reacting Fy shear loads:

$psy := 22$

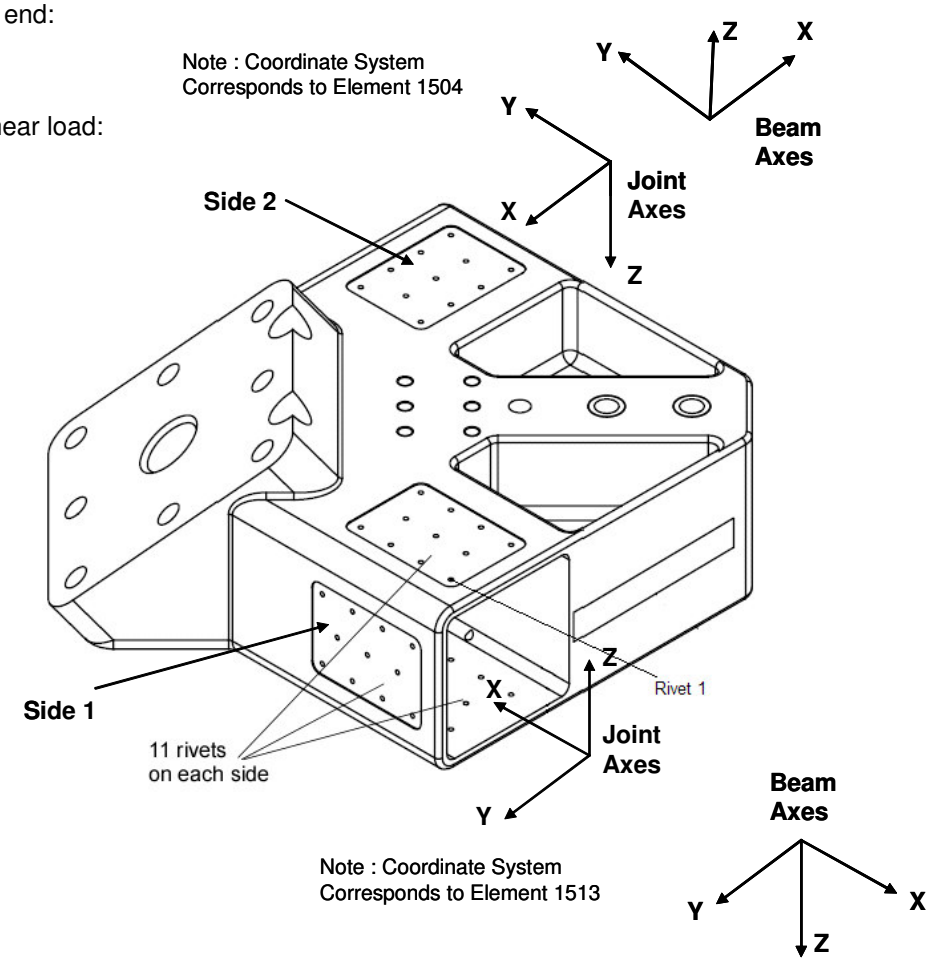

Shear load/rivet due to Fy

$$Fsry := \frac{Fya}{psy}$$

$$\max(Fsry) = 114.4 \cdot lbf$$

Shear load/rivet due to Fz

$$Fsrz := \frac{Fza}{psz}$$

$$\max(Fsrz) = 427.9 \cdot lbf$$

Shear flow due to torsion
(Ref. Bruhn section A6.8)

$$Fsrt := \frac{Mxa}{2 \cdot Am} \qquad \max(Fsrt) = 456.7 \cdot \frac{lbf}{in}$$

Note: The shear load (Fsrt) is used to calculate the torsional load (Psrt) in the rivet due to the pitch on the rivet pattern. See Figures 2.5.2.3-4 and 2.5.2.3-5.

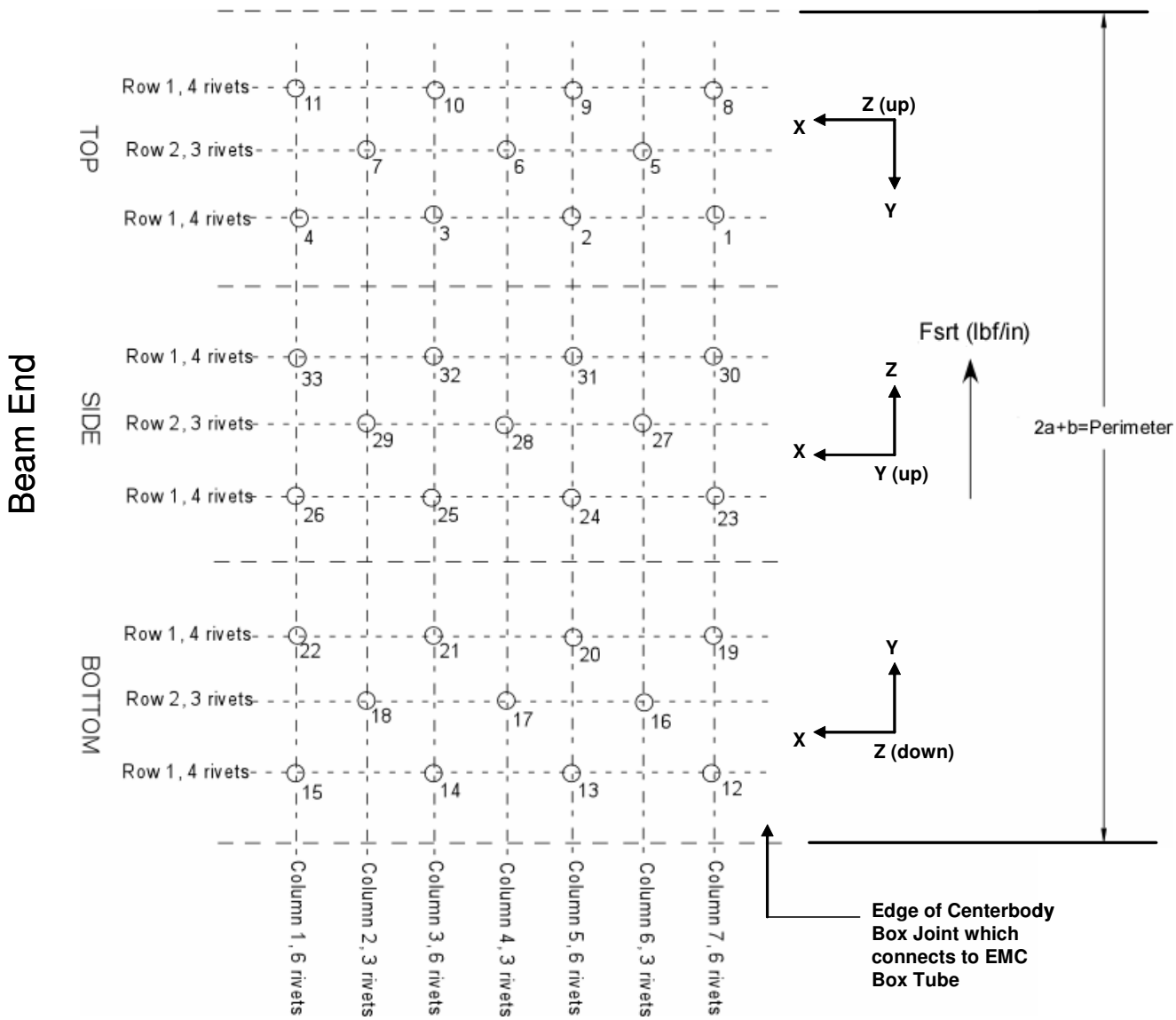

Figure 2.5.2.3-4 Side 1 Layout of Rivet Patterns used to Calculate Rivet Pitch for Torsional Load

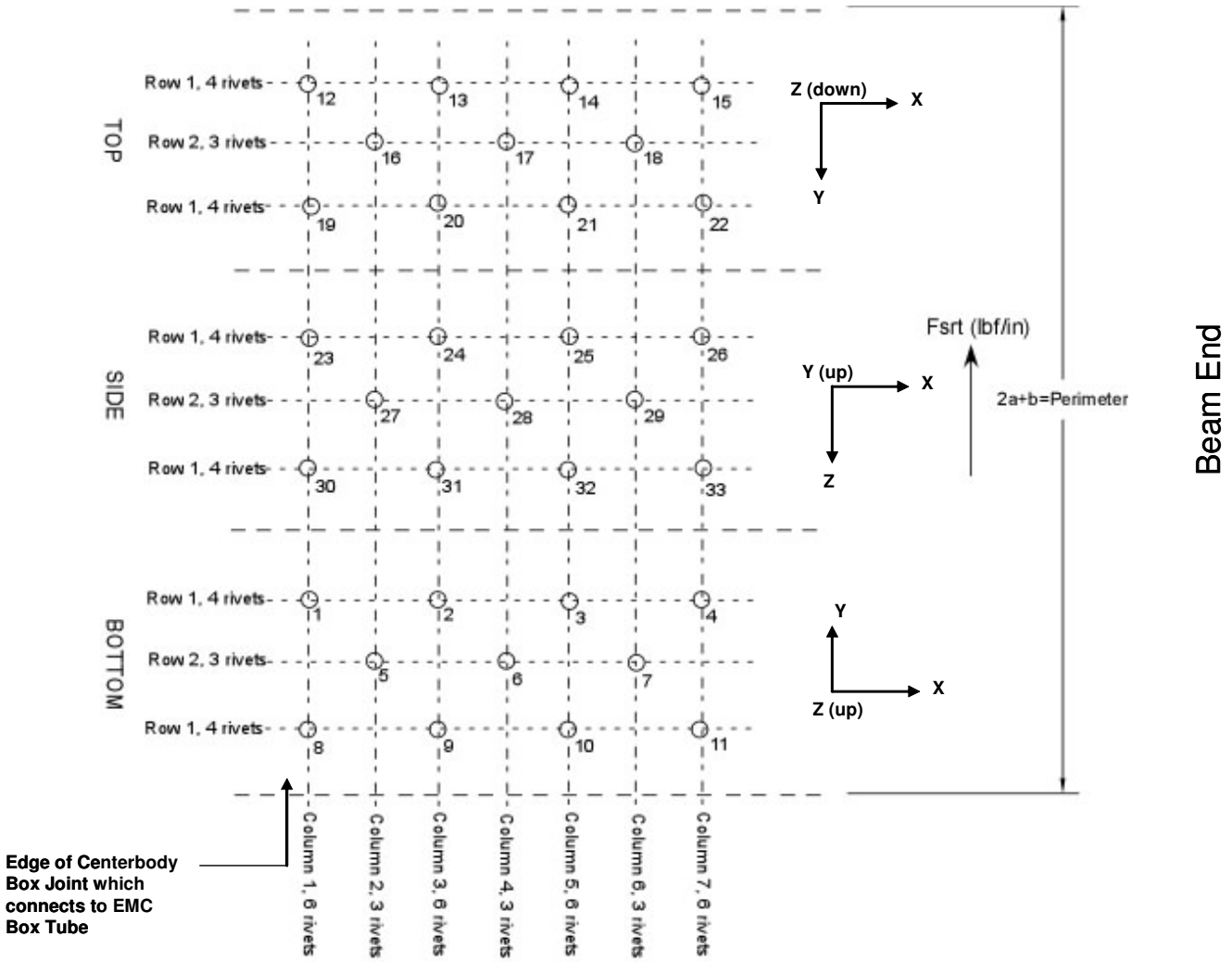

Figure 2.5.2.3-5 Side 2 Layout of Rivet Patterns used to Calculate Rivet Pitch for Torsional Load

Calculation of Rivet Pitch:

It is assumed that all rivets share the torsion load equally. Therefore, each column of rivets has the same maximum load per rivet due to torsion.

Perimeter of rivet pattern $per := 2 \cdot a + b$ $per = 12 \cdot in$

Loads in rivet due to torsion $Psrt := Fsrt \cdot \frac{per}{Nsps}$ $\max(Psrt) = 166.1 \cdot lbf$

Shear load in rivets due to beam axial load $Prta := \frac{Fxa}{Nsps}$ $\max(Prta) = 296.1 \cdot lbf$

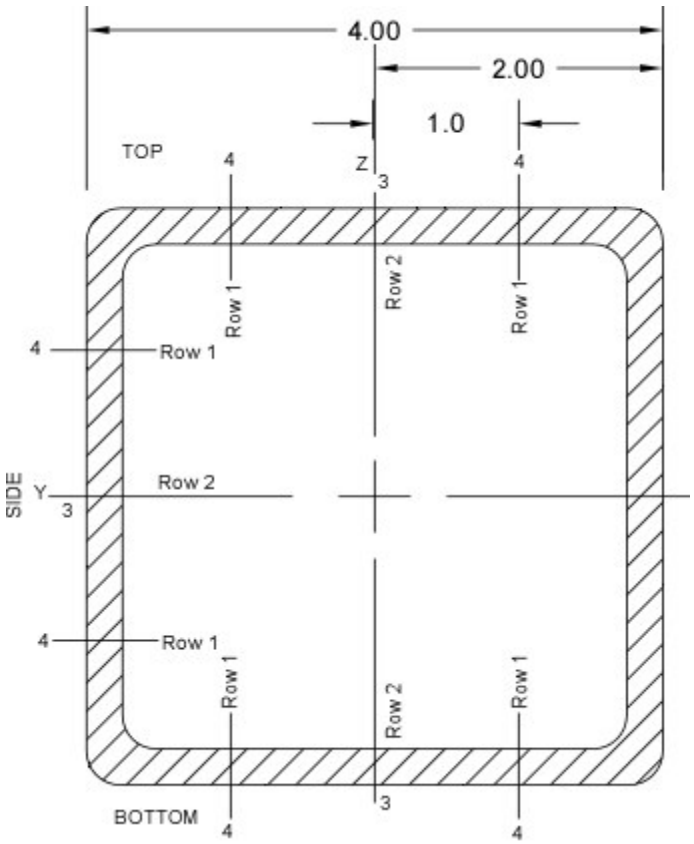

Note: Figure is for reference only.

Rivet Dimension Variables:
(Ref. SDG39135759)

$z1 := 1.0 \cdot in$

$z2 := 2.0 \cdot in$

$y1 := 1.0 \cdot in$

$y2 := 2.0 \cdot in$

Eccentrically Loaded Rivets due to My and Mz Moments:

Rivet Coordinate System Data

$j := 1 .. \text{rows}(\text{coord})$ Counter for Coordinate Points

$x_j := \text{coord}_{j,2}$ Rivet Coordinate Points for x-direction

$\text{rivet_counter}_j := \frac{\text{coord}_{j,1}}{\text{in}}$

$y_j := \text{coord}_{j,3}$ Rivet Coordinate Points for y-direction

$z_j := \text{coord}_{j,4}$ Rivet Coordinate Points for z-direction

Prepared By	B. Dyer	05/01/06	Engineering and Science Contract Group *Structural Analysis Section*	File Name emcboxtoCBJ.mcd
Revised By	G. Reyes	06/23/09		
Checked By	C. Bala			Draw ing No. SEG39135759
Title	EMC Box Tube to Centerbody Joint Rivet Analysis			

For Moment My:

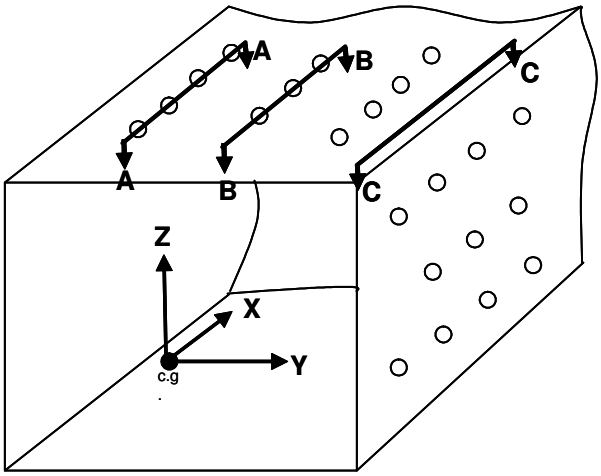

Eccentrically Loaded Rivet Pattern about My

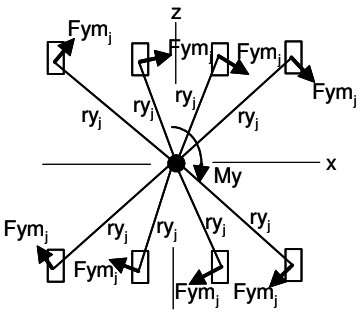

Cross-Section A-A

(Row 1, 16 rivets)

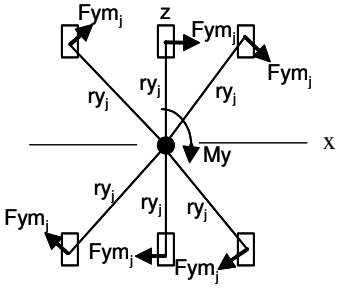

Cross-Section B-B

(Row 2, 6 rivets)

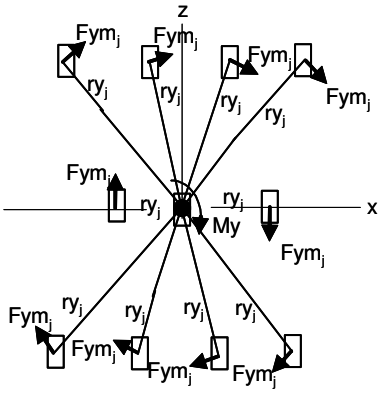

Cross-Section C-C

(Represents side, 11 rivets)

Note: Figure is for reference only.

$$ry_j := \left[\left(x_j\right)^2 + \left(z_j\right)^2\right]^{\frac{1}{2}}$$

Radial distance to each rivet from the centroid of the rivet pattern

$$sigry := \sum_{j=1}^{rows(coord)} \left(ry_j\right)^2$$

Sum of the radial directions for all rivets in the rivet pattern

$$\beta y_j := \begin{cases} 0 & \text{if } \left(x_j = 0\right)\cdot\left(z_j = 0\right) \\ atan2\left(x_j, z_j\right) & \text{otherwise} \end{cases}$$

Angle between resultant vector and tension or shear vectors

(Note: The angle θ is defined off of the x-axis.
See below.)

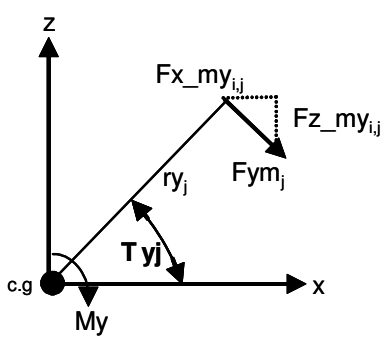

$$Fym_{i,j} := \frac{(-My)_i \cdot ry_j}{sigry}$$

Resultant Load at Each Rivet

$$\max(Fym) = 891 \cdot lbf$$

$$Fz_my_{i,j} := Fym_{i,j} \cdot \sin\left(\beta y_j - \frac{u}{2}\right)$$

z - component of Fym

$$Fx_my_{i,j} := Fym_{i,j} \cdot -\cos\left(\beta y_j - \frac{u}{2}\right)$$

x - component of Fym

For Moment Mz:

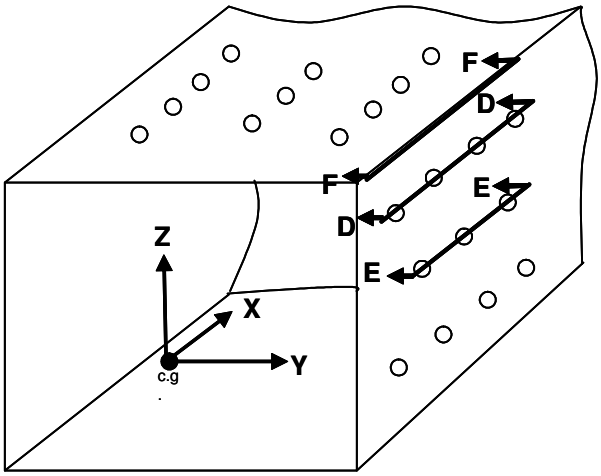

Eccentrically Loaded Rivet Pattern about Mz

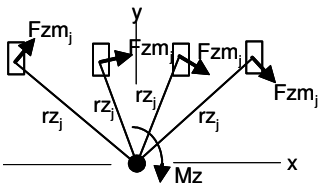

Cross-Section D-D

(Row 1, 8 rivets)

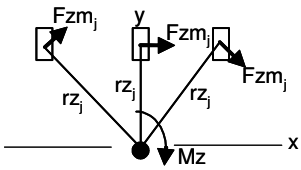

Cross-Section E-E

(Row 2, 3 rivets)

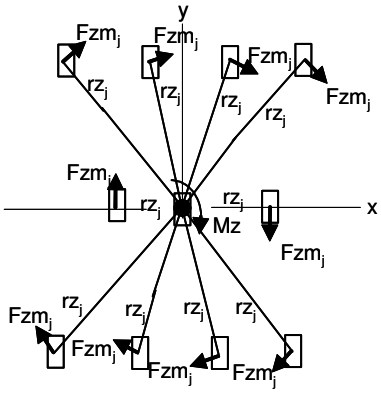

Cross-Section F-F

(Represents both sides, 22 rivets)

Note: Figure is for reference only.

$Mz_i := Mz_i + (Fxa_i \cdot ycg)$ Total Mz Moment due to unsymmetrical rivet pattern in y direction

$rz_j := \left[(x_j)^2 + (y_j)^2\right]^{\frac{1}{2}}$ Radial distance to each rivet from the centroid of the rivet pattern

$sigrz := \sum_{j=1}^{rows(coord)} (rz_j)^2$ Sum of the radial directions for all rivets in the rivet pattern

$\beta z_j := atan2\left[x_j, (y_j)\right]$ Angle between resultant vector and tension or shear vectors

$Fzm_{i,j} := \frac{(Mz)_i \cdot rz_j}{sigrz}$ Resultant Load at Each Rivet

$max(Fzm) = 953.2 \cdot lbf$

(Note: The angle θ is defined off of the x-axis.
See below.)

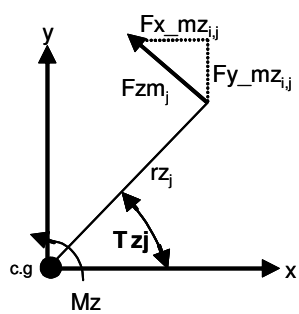

$Fy_mz_{i,j} := Fzm_{i,j} \cdot \sin\left(\frac{u}{2} + \beta z_j\right)$ y - component of Fzm

$Fx_mz_{i,j} := Fzm_{i,j} \cdot -\cos\left(\frac{u}{2} + \beta z_j\right)$ x - component of Fzm

$F_{i,j} := \begin{cases} Fz_my_{i,j} & \text{if } rivet_counter_j \le 22 \\ Fy_mz_{i,j} & \text{otherwise} \end{cases}$ Total Axial Load due to My and Mz Moments

$max(F) = 637.6 \cdot lbf$

Note: The axial loading is reacted by the beam and socket and not taken by the rivet. See section 2.2.3 for beam and socket analysis.

Total Rivet Shear Load:

$$Pt_{i,j} := \begin{cases} \sqrt{\left(Prta_i + Fx_my_{i,j} + Fx_mz_{i,j}\right)^2 + \left(Psrt_i + Fsry_i + Fy_mz_{i,j}\right)^2} & \text{if } j \le 22 \\ \sqrt{\left(Prta_i + Fx_my_{i,j} + Fx_mz_{i,j}\right)^2 + \left(Psrt_i + Fsrz_i + Fz_my_{i,j}\right)^2} & \text{otherwise} \end{cases}$$

$$\max(Pt) = 1523.9 \cdot lbf$$

Margin of safety for Total Rivet Load:

$$MS1t_{i,j} := \frac{Fs \cdot cf_i}{Pt_{i,j} \cdot FSu \cdot FF} - 1 \qquad \min(MS1t) = 0.146$$

(Note: Fitting Factor (FF) included for misalignment, different shim thicknesses, etc. ...)

The following will output an array for each row of rivets with element identity, load case, load, and margin of safety from left to right.

$$output := augment(ID, LC, MS1t)$$

$rows(output) = 1024$ Number of rows in the "output" array

$cols(output) = 35$ Number of columns in the "output" array

The "output" array is then searched for the location of the minimum margin. The match function is used to locate the minimum margin of safety and the element identity, load case, rivet location, and maximum load are pulled from the array.

$$match(\min(MS1t), MS1t) = \begin{bmatrix} \begin{pmatrix} 157 \\ 8 \end{pmatrix} \end{bmatrix}$$

Load Case for Minimum Margin of Safety

$$min_LC := output_{\left(match(\min(MS1t), MS1t)_{1,1}\right)_1, 2}$$

Element ID for Minimum Margin of Safety

$$min_ID := output_{\left(match(\min(MS1t), MS1t)_{1,1}\right)_1, 1}$$

Rivet number 8 is the one with the minimum margin of safety of 0.146.

Shear Minimum Margin of Safety:

Minimum Margin of Safety	$\min(MS1t) = 0.146$
Element ID for Minimum Margin of Safety	$min_ID = 1509$
Load Case for Minimum Margin of Safety	$min_LC = 1020$
Maximum Rivet Load for Minimum Margin of Safety	$\max(Pt) = 1524 \cdot lbf$
Rivet with Minimum Margin of Safety	Rivet number 8 (See Figures 2.5.2.3-4 and 2.5.2.3-5 for rivet location)

Bearing on Hole Wall:

Hole diameter $dh := 0.257 \cdot in$ (Ref. SEG39135758, Flag Note 1)

Tube thickness $tp := 0.25 \cdot in$ (Ref. SDG39135761)

Bearing area $Ab := dh \cdot tp$ $Ab = 0.06425 \cdot in^2$

Max. load per rivet $max(Pt) = 1523.9 \cdot lbf$

Max. bearing stress $b := \frac{max(Pt)}{Ab}$ $b = 23718.7 \cdot psi$

Margin of safety $MSb := \frac{Fbru \cdot cb}{b \cdot FSu \cdot FF} - 1$ $MSb = 1.87$

Shear tear out:

Edge distance $e := (0.588 + 0.312) \cdot in$ (Ref. SDG39135759)

Note: Using this e is conservative, since actual rivet force is in general at some angle.

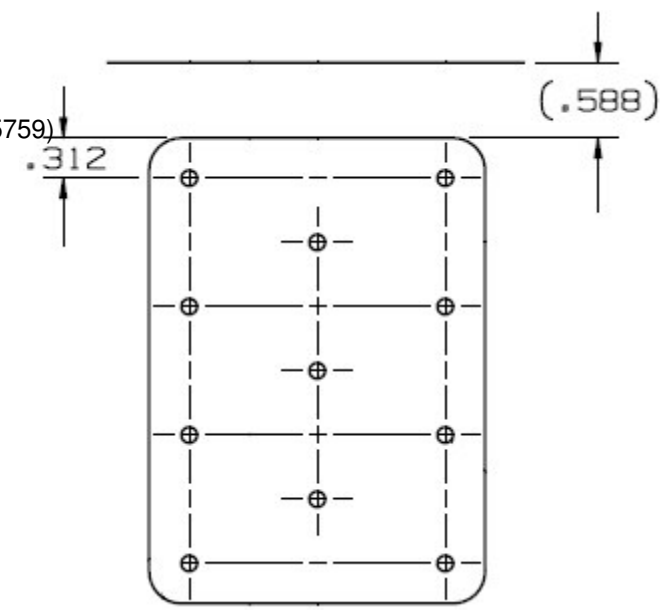

DETAIL G
(For clarity, other dimension lines were removed)

Hole diameter $dh := 0.257 \cdot in$

E over D ratio $\frac{e}{dh} = 3.502$

Tube thickness $tp := 0.25 \cdot in$

Shear out area $As := 2 \cdot \left(e - \frac{dh}{2} \cdot \cos(40 \cdot deg)\right) \cdot tp$

$As = 0.4008 \cdot in^2$

Max. load per rivet $max(Pt) = 1523.9 \cdot lbf$

Max. shear tear out stress $=s := \frac{max(Pt)}{As}$ $=s = 3802.4 \cdot psi$

Margin of safety $MSsh := \frac{Fsu \cdot cd}{=s \cdot FSu \cdot FF} - 1$ $MSsh = 4.66$

2.5.2.4 RICH Bracket to EMC Box Tubes

Margins of Safety

Table 2.5.2.4-1: Minimum Margin of Safety Summary

Part / Dwg Number	Part Name / Description	Material & Heat Treatment	Critical Load Condition	Failure Mode	Margin of Safety	Reference Page
NAS1398M8-9	RICH Rivets	Monel ALY 400	Landing	Shear	3.36 (u)	2.5.2.4-13

Notes:

1. Factors of Safety are 1.4 for Ultimate and 1.1 for Yield.
2. Boundary condition is at five Trunnion locations.
3. All 192 load cases of Launch and Landing are applied.
4. u = ultimate, y = yield

Factors of Safety

The hardware is designed with a yield factor of 1.1 and an ultimate factor of 1.4 against limit loads for Launch and Landing.

Description of Structure

Figure 2.5.2.4-1 below shows the location of six RICH Brackets in AMS-02. The Brackets were machined out of 7050-T7451 Aluminum Alloy plate. They were riveted to Centerbody Tubes. Part of a Bracket was bolted to Ring Imaging Cherenkov Counter (RICH).

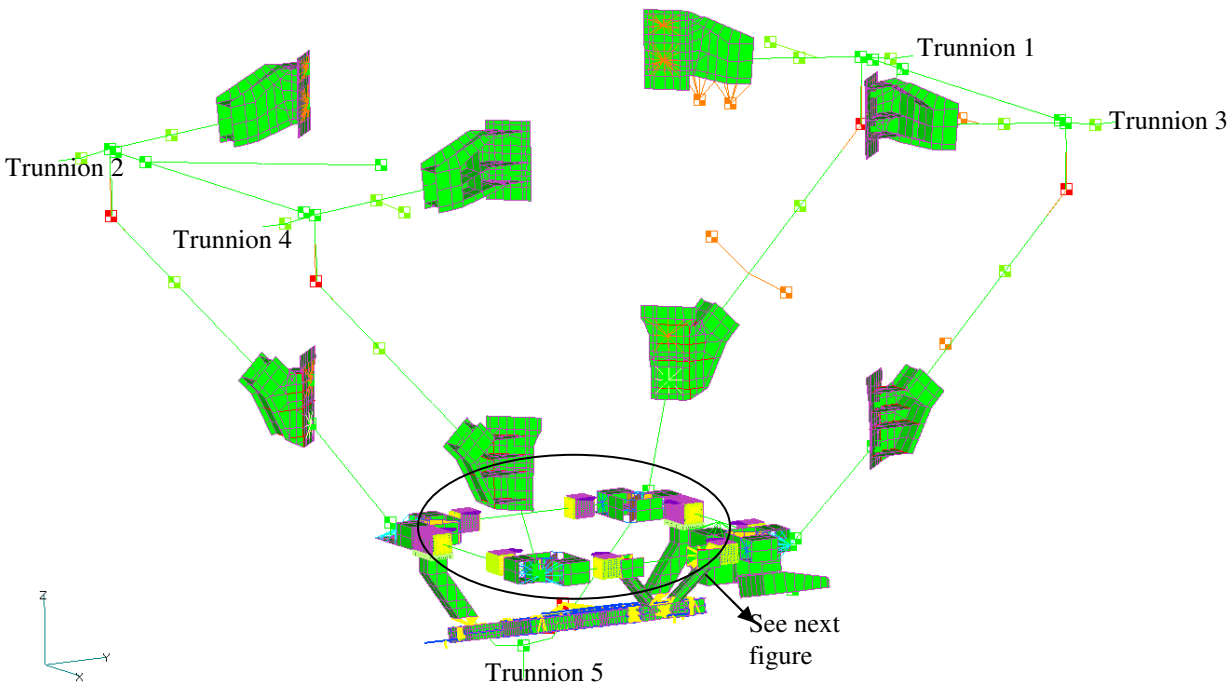

Figure 2.5.2.4-1: Location of RICH Brackets in AMS-02

* Note that the above figure does not show Vacuum Case for clarity.

Description of Model

A FEM model was built of the RICH Brackets using FEMAP software.

1. Parts were mainly modeled as CQUAD4 and CTRIA3 plate elements.
2. Section of Centerbody Tube, which was coupled with Brackets, was CQUAD4 plate elements.
3. All rivets was modeled as RBE2 rigid elements with DOF's 1&2, 1&3, or 2&3. (see Figure 2.5.2.4-3
4. Continuation of Centerbody Tube beam elements and plate elements was represented by RBE2 rigid elements with DOF's 1-6.
5. Bar elements were found at intersection between two plates.

The model of RICH Brackets was then imported into USS2-04 load model. A built PAS model was also intergrated into the load model.

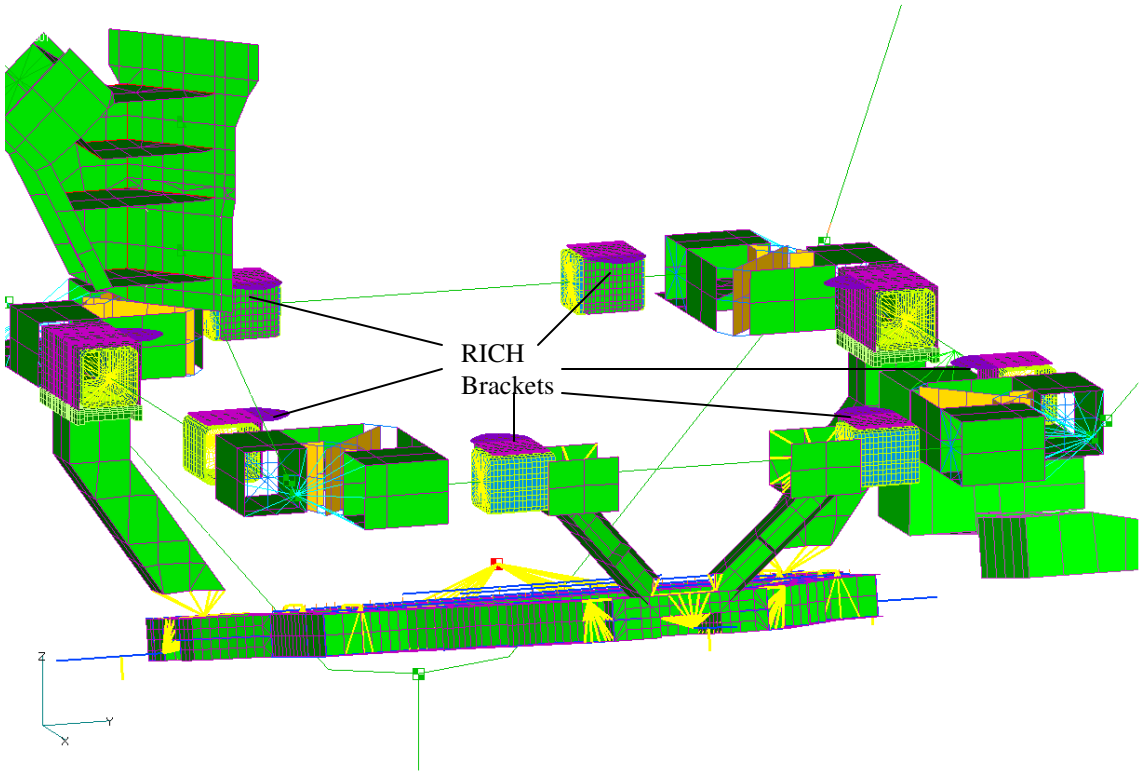

Figure 2.5.2.4-2: FEMAP Model of RICH Brackets

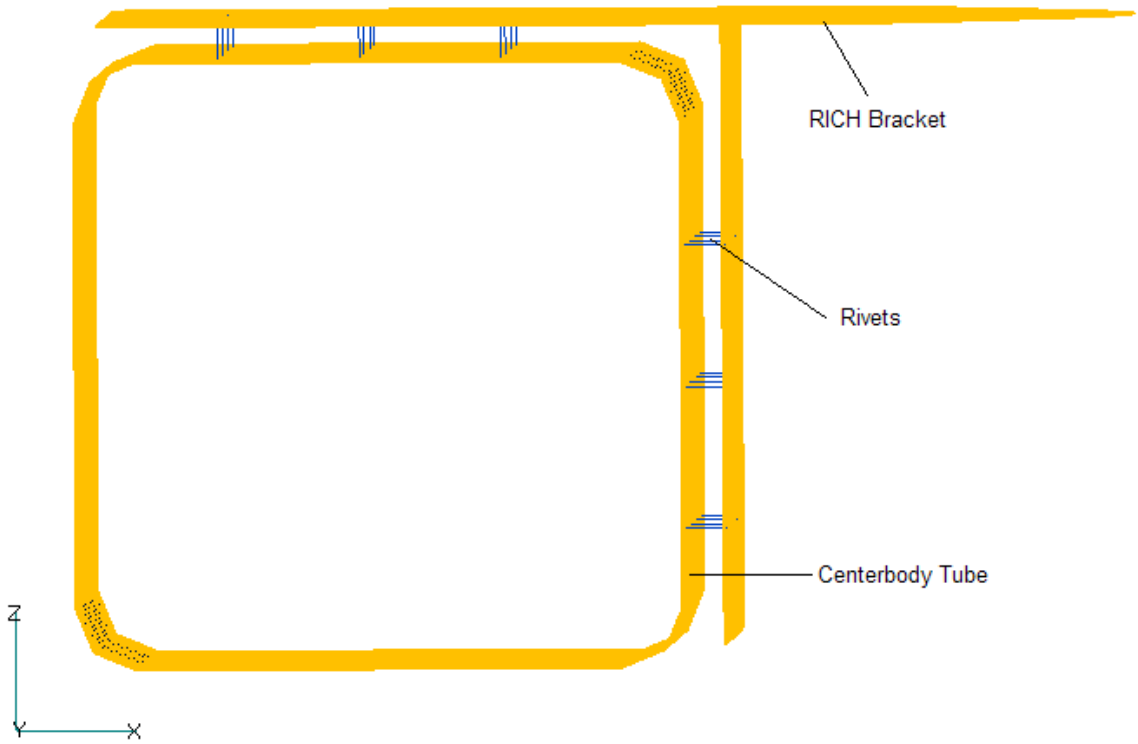

Figure 2.5.2.4-3: FEMAP Model of Rivets

The model was constrained with DOF's 1&3 at Trunnion 1&2 (see Figure 2.5.2.4-1), with DOF's 3 at Trunnion 3&4, and with DOF's 2 at Trunnion 5.

All 192 load cases for Launch and Landing were applied.

MSC/NASTRAN v.2005 was used as a solver for analyzing the complete math model of AMS-02.

Forces at rivet location were requested.

Table below shows details of model inputs.

Table 2.5.2.4-2: Inputs of Finite Element Model of RICH Brackets

DESCRIPTION	NODE #	ELEM #	TYPE	COLOR	PROP	MAT'L	LC#	SPC#	COORD
rich bracket	200,001 - 212,802	200,001 - 202,424	plate	124	200,001 - 0.25" TK	200,001			
			plate	14	200,002 - 0.4375" TK				
									200001
									1001001
centerbody tube									
@ rich		215,001 - 218,840	plate	85	200,011 - tube	200,001			
		220,001 - 220,464							
			bar	24	200,003 - dummy	200,001			
rivets	215,001 - 215,504		rbe2	13					
misc			rbe2	20					
PAS	300,001 - 303,474	300,001 - 304,504			300,001 - 300,023	300,001 - 300,006	300,001	300,001	300,001 - 300,002

Model Checks

Rigid body checks were performed using MSC/NASTRAN. Results are shown below. The KGG, KNN and KFF matrices all pass with low strain energies.

```
*** USER INFORMATION MESSAGE 7570 (GPWG1D)
    RESULTS OF RIGID BODY CHECKS OF MATRIX KGG      (G-SET)  FOLLOW:
    PRINT RESULTS IN ALL SIX DIRECTIONS AGAINST THE LIMIT OF   1.000000E-02
        DIRECTION       STRAIN ENERGY       PASS/FAIL
        ---------       -------------       ---------
          1             1.273202E-07        PASS
          2             4.420144E-08        PASS
          3             1.633816E-08        PASS
          4             5.057998E-05        PASS
          5             1.047791E-04        PASS
          6             1.609049E-04        PASS


*** USER INFORMATION MESSAGE 7570 (GPWG1D)
    RESULTS OF RIGID BODY CHECKS OF MATRIX KNN      (N-SET)  FOLLOW:
    PRINT RESULTS IN ALL SIX DIRECTIONS AGAINST THE LIMIT OF   1.000000E-02
        DIRECTION       STRAIN ENERGY       PASS/FAIL
        ---------       -------------       ---------
          1             1.263888E-07        PASS
          2             4.129834E-08        PASS
          3             1.326043E-08        PASS
          4             5.075881E-05        PASS
          5             1.044385E-04        PASS
          6             1.661979E-04        PASS


*** USER INFORMATION MESSAGE 7570 (GPWG1D)
    RESULTS OF RIGID BODY CHECKS OF MATRIX KFF      (F-SET)  FOLLOW:
    PRINT RESULTS IN ALL SIX DIRECTIONS AGAINST THE LIMIT OF   1.000000E-02
        DIRECTION       STRAIN ENERGY       PASS/FAIL
        ---------       -------------       ---------
          1             1.263888E-07        PASS
          2             4.129834E-08        PASS
          3             1.326043E-08        PASS
          4             5.075881E-05        PASS
          5             1.044385E-04        PASS
          6             1.661979E-04        PASS
```

```
*** USER INFORMATION MESSAGE 7570 (GPWG1D)
    RESULTS OF RIGID BODY CHECKS OF MATRIX KAA1     (A-SET)  FOLLOW:
    PRINT RESULTS IN ALL SIX DIRECTIONS AGAINST THE LIMIT OF   1.000000E-02
        DIRECTION       STRAIN ENERGY       PASS/FAIL
        ---------       -------------       ---------
          1             1.263888E-07        PASS
          2             4.129834E-08        PASS
          3             1.326043E-08        PASS
          4             5.075881E-05        PASS
          5             1.044385E-04        PASS
          6             1.661979E-04        PASS
```

A further check is that of rigid body modes. The first 10 unconstrained modes are shown below. There are six rigid body modes (~ 0.0), and then good separation with the first non-rigid body mode.

Table 2.5.2.4-3: Eigenvalue Summary of RICH Brackets Model

R E A L E I G E N V A L U E S						
MODE NO.	EXTRACTION ORDER	EIGENVALUE	RADIANS	CYCLES	GENERALIZED MASS	GENERALIZED STIFFNESS
1	1	-5.53E-06	2.35E-03	3.74E-04	1.00E+00	-5.53E-06
2	2	3.02E-06	1.74E-03	2.76E-04	1.00E+00	3.02E-06
3	3	5.91E-06	2.43E-03	3.87E-04	1.00E+00	5.91E-06
4	4	1.21E-05	3.47E-03	5.53E-04	1.00E+00	1.21E-05
5	5	2.89E-05	5.38E-03	8.56E-04	1.00E+00	2.89E-05
6	6	3.10E-05	5.56E-03	8.86E-04	1.00E+00	3.10E-05
7	7	3.56E+07	5.97E+03	9.50E+02	1.00E+00	3.56E+07
8	8	5.44E+07	7.37E+03	1.17E+03	1.00E+00	5.44E+07
9	9	7.79E+07	8.83E+03	1.41E+03	1.00E+00	7.79E+07
10	10	1.61E+08	1.27E+04	2.02E+03	1.00E+00	1.61E+08

Additional check is comparision of the Strap loads between the load model and the detail model. The loads are picked randomly. Loads in both models are closely matched.

Table 2.5.2.4-4: Strap Loads (lbf) in Load Model 2-04

Case	*90001*	*90002*	*90003*	*90004*	*90005*	*90006*	*90007*	*90008*	*90009*	*90010*	*90011*	*90012*	*90013*	*90014*	*90015*	*90016*
1001	1186.6	1615.3	1495.4	2128.4	1241.3	3808.0	1382.5	5331.2	5259.6	1683.6	10097.9	2054.3	7952.9	3314.8	9044.1	3929.6
1023	1171.3	2245.6	1605.7	6899.0	1013.3	1511.8	1670.6	3157.0	7264.3	4582.4	6207.3	3965.4	6681.8	1678.2	10078.1	1914.3
2031	3923.0	6907.2	1444.7	1555.9	2975.5	6887.1	1389.8	1621.2	6181.0	8787.8	1481.6	1652.1	7512.9	5265.2	1564.0	1500.3
2040	2119.5	1696.3	5485.8	2655.9	2756.3	2103.0	7067.2	3734.3	1495.0	1586.5	1980.6	2141.0	1433.5	2698.7	1621.3	4952.3
4050	1896.4	2100.0	3024.5	3905.9	5116.4	1178.1	6429.4	1281.8	882.7	1133.1	2774.4	6618.2	682.0	1087.4	1612.9	2519.9
4064	7657.7	3755.7	1663.0	1556.5	10633.2	1494.6	2604.4	1236.1	5487.6	10488.8	593.2	852.8	2100.1	7849.4	479.6	947.1

Table 2.5.2.4-5: Strap Loads (lbf) in RICH Brackets Model

Case	*90001*	*90002*	*90003*	*90004*	*90005*	*90006*	*90007*	*90008*	*90009*	*90010*	*90011*	*90012*	*90013*	*90014*	*90015*	*90016*
1001	1195.5	1626.4	1487.0	2103.9	1243.4	3955.8	1377.0	5313.0	5456.3	1695.6	9916.7	2040.5	8043.0	3343.1	9093.3	3917.9
1023	1169.8	2238.5	1606.0	6878.7	1014.5	1513.0	1674.1	3197.3	7269.8	4497.9	6255.0	3913.6	6651.4	1685.5	10027.4	1920.5
2031	3932.3	6885.9	1446.3	1556.1	2993.2	6918.0	1390.2	1620.2	6117.1	8757.8	1481.3	1653.5	7487.3	5279.0	1562.3	1500.0
2040	2119.5	1696.3	5485.2	2655.8	2756.4	2103.1	7067.2	3734.8	1495.0	1586.5	1980.6	2141.1	1433.5	2698.7	1621.2	4952.8
4050	1896.4	2098.6	3021.5	3883.5	5118.2	1179.8	6366.9	1281.3	884.2	1135.0	2761.4	6589.3	685.4	1089.2	1609.6	2492.2
4064	7658.5	3754.2	1662.9	1556.4	10634.0	1494.7	2604.8	1236.2	5487.8	10489.4	593.2	852.9	2100.0	7847.2	479.6	947.1

Table 2.5.2.4-6: Load Differences (lbf) between Two Models

Case	*90001*	*90002*	*90003*	*90004*	*90005*	*90006*	*90007*	*90008*	*90009*	*90010*	*90011*	*90012*	*90013*	*90014*	*90015*	*90016*
1001	-8.9	-11.1	8.3	24.6	-2.0	-147.8	5.5	18.2	-196.7	-12.0	181.3	13.8	-90.1	-28.3	-49.2	11.6
1023	1.5	7.2	-0.3	20.3	-1.1	-1.2	-3.6	-40.4	-5.5	84.5	-47.7	51.8	30.3	-7.3	50.6	-6.2
2031	-9.2	21.3	-1.6	-0.2	-17.8	-30.9	-0.4	1.0	64.0	30.0	0.3	-1.4	25.6	-13.8	1.7	0.2
2040	0.0	0.0	0.6	0.1	-0.1	0.0	0.0	-0.5	0.0	0.0	0.0	0.0	0.0	0.1	0.1	-0.5
4050	0.0	1.4	3.0	22.5	-1.9	-1.7	62.4	0.4	-1.5	-1.9	13.0	28.9	-3.4	-1.9	3.3	27.7
4064	-0.8	1.5	0.1	0.2	-0.8	-0.1	-0.3	-0.1	-0.2	-0.6	-0.1	0.0	0.1	2.2	0.0	0.0

Note: 1. Negative sign in Table 2.5.2.4-6 means load in Detail model greater than in Load model.

Material and Temperature

The Rivets are Monel Alloy 400 (UNS N04400). Material properties of Monel Alloy 400 are taken from the specification of NAS1398M8-9. Temperature limits are based upon *ICD-2-19001 (Shuttle Orbiter / Cargo Standard Interfaces), Revision-L.* For Launch condition, the temperature of 150°F is applied. For Landing condition, the temperature of 220°F is applied.

Analysis

All MPC forces for Rivets are compared to the shear strength of Monel Alloy 400. All margins of safety are positive.

Check of Rivets, NAS1398M8-9 at RICH Brackets to Centerbody Tubes

Rivets are NAS1398M8-9, 0.25 in., blind protruding head locked spindle; Monel Alloy 400 (UNS N04400).

Rivet diameter, $D := 0.25 \cdot in$

Shear area, $A := \frac{\beta \cdot D^2}{4}$ $A = 0.049\,in^2$

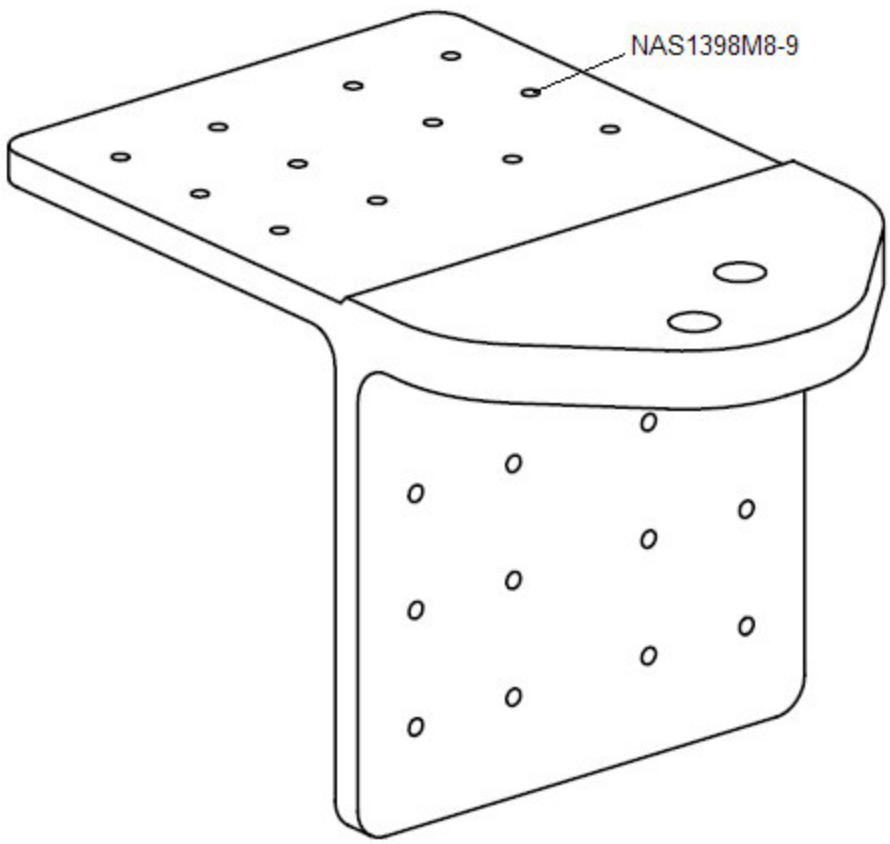

Max. rivet shear strength @ room temperature $Fsu := 48500 \cdot psi$ *(Ref. www.specialmetals.com, MONEL Alloy 400, Table 10)*

By interpolation method, shear strength at the temperature 220°F was calculated: $Fsu := 45146 \cdot psi$

Shear allowable, $Psu := Fsu \cdot A$ $Psu = 2216\,lbf$

Table 10 - Shear Strength of MONEL Alloy 400 Rivet Wire

Property	Condition	
	Annealed	B & S No. 1[a]
Shear Strength, ksi		
Room	48.5	54.5
600[b]	45.0	52.0
800[b]	37.0	47.5
1000[b]	29.0	38.0
800[c]	38.5	49.5
1000[c]	30.5	38.5
Tensile Strength, ksi	78.5	88.0
Yield Strength (0.2% Offset), ksi	46.0	75.5
Elongation, %	41	18

[a]Corresponds to the approximate strength of the shank of a headed rivet.
[b]30 min at temperature before testing.
[c]24 hr at temperature before testing.

Factor of Safety, $FSu := 1.4$

NASPOST inputs

Read in the external datum from NASPOST results: *(see p.2.5.2.4-14 for SORT format)*

- Shear forces are retracted at GRID IDs represented location of rivets.

- All 192 load cases for Launch and Landing are included.

$load := READPRN("rivetR.inp")$ *(Reading rivet loads from Launch and Landing cases)*

$i := 1 .. rows(load)$ $ID := load^{\langle 1 \rangle}$ $LC := load^{\langle 2 \rangle}$

$shear1 := load^{\langle 3 \rangle}$ $shear2 := load^{\langle 4 \rangle}$

* Note that "rivetR.inp" was generated from NASPOST results (.LIS files) by just removing all texts and comments.

Total shear per rivet: $Ps_i := \sqrt{\left(shear1_i\right)^2 + \left(shear2_i\right)^2} \cdot lbf$

Margin of Safety, $MS_i := \frac{Psu}{FSu \cdot Ps_i} - 1$

Minimum MS, $MSrivetR := \min(MS)$

$MSrivetR = 3.36$

*** GRID and Load Case IDs, shear forces, and margin of safety where minimum MS was calculated are shown below.

$output := augment(ID, LC)$ $output := augment(output, shear1)$ $output := augment(output, shear2)$

$output := augment(output, MS)$ $sorted1 := csort(output, 5)$

GRID LC Shears MS

$submatrix(sorted1, 1, 1, 1, cols(sorted1)) = (215487 \quad 4015 \quad -264 \quad 249 \quad 3.361875)$

REFERENCE: NASPOST SORT script

```
$
SELECT MPC-FORCES;IDS=215049 THRU 215060\
                215097 THRU 215108\
                215145 THRU 215156\
                215193 THRU 215204\
                215241 THRU 215252\
                215481 THRU 215492
  SORT VAR = MAXABS(FX);OPT=0
  PRINT 1 2;
  HEADING = 'RICH RIVETS: MPC FORCE / Fx'
$
$  SORT VAR = MAXABS(FY);OPT=0
$  PRINT 1 2;
$  HEADING = 'RICH RIVETS: MPC FORCE / Fy'
$
SELECT MPC-FORCES;IDS=215253 THRU 215264 215493 THRU 215504
  SORT VAR = MAXABS(FX);OPT=0
  PRINT 1 3;
  HEADING = 'RICH RIVETS: MPC FORCE / Fx'
$
$  SORT VAR = MAXABS(FZ);OPT=0
$  PRINT 1 3;
$  HEADING = 'RICH RIVETS: MPC FORCE / Fz'
$
SELECT MPC-FORCES;IDS=215061 THRU 215072\
                215109 THRU 215120\
                215157 THRU 215168\
                215205 THRU 215216
  SORT VAR = MAXABS(FY);OPT=0
  PRINT 2 3;
  HEADING = 'RICH RIVETS: MPC FORCE / Fy'
$
$  SORT VAR = MAXABS(FZ);OPT=0
$  PRINT 2 3;
$  HEADING = 'RICH RIVETS: MPC FORCE / Fz'
$
```

2.5.2.5 RICH PAS Brackets to EMC Box Tubes

Margins of Safety

Table 2.5.2.5-1: Minimum Margin of Safety Summary

Part / Dwg Number	Part Name / Description	Material & Heat Treatment	Critical Load Condition	Failure Mode	Margin of Safety	Reference Page
NAS1398M8-9	PAS-RICH Rivets	Monel ALY 400	On-Orbit	Shear	0.27 (u)	2.5.2.5-14

Notes:

1. Factors of Safety are 1.4 and 1.1 for Ultimate and Yield, respectively in Launch and Landing conditions. Factors of Safety are 2.0 and 1.25 for Ultimate and Yield, respectively in On-Orbit condition.
2. Boundary condition is at five Trunnion locations in Launch and Landing condition. Boundary condition is at C.G. of PAS Capture Bar and three Guide Bars in On-Orbit condition.
3. All 192 load cases of Launch and Landing and 8 load cases of On-Orbit are applied.
4. u = ultimate, y = yield

Factors of Safety

The hardware is designed with a yield factor of 1.1 and an ultimate factor of 1.4 against limit loads for Launch and Landing. It is also designed with a yield factor of 1.25 and an ultimate factor 2.0 against limit loads for On-Orbit.

Description of Structure

Figure 2.5.2.5-1 below shows the location of two PAS-RICH Brackets in AMS-02. The Brackets were machined out of 7050-T7451 Aluminum Alloy plate. They were riveted to Centerbody Tubes. Part of a Bracket was bolted to Payload Attach System (PAS). Another part was bolted to Ring Imaging Cherenkov Counter (RICH).

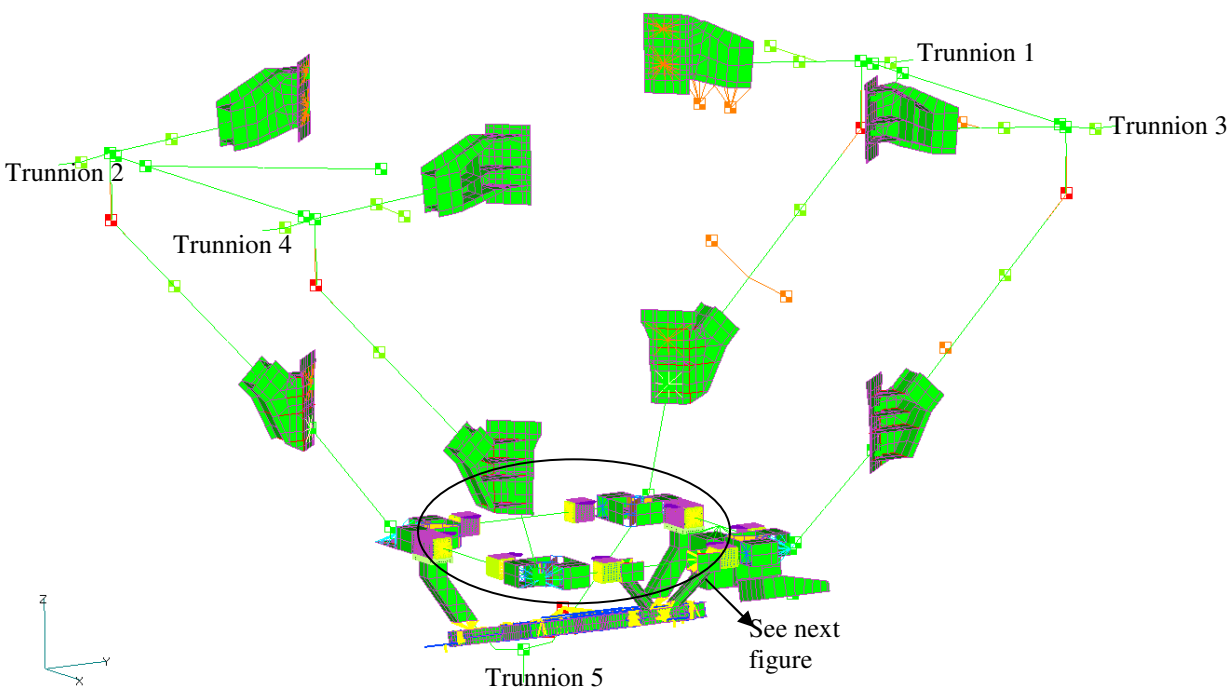

Figure 2.5.2.5-1: Location of PAS-RICH Brackets in AMS-02

* Note that the above figure does not show Vacuum Case for clarity.

Description of Model

A FEM model was built of the PAS-RICH Brackets using FEMAP software.

1. Parts were mainly modeled as CQUAD4 and CTRIA3 plate elements.
2. Interface of PAS-RICH brackets and PAS was CHEXA solid elements.
3. Section of Centerbody Tube, which was coupled with Brackets, was CQUAD4 plate elements.
4. All rivets was modeled as RBE2 rigid elements with DOF's 1&2 or 1&3. (see Figure 2.5.2.5-3)
5. Continuation of Centerbody Tube beam and plate elements was represented by RBE2 rigid elements with DOF's 1-6.
6. Bar elements were found at intersection between two plates.
7. RSSCON element was connector of plate to solid elements.

The model of PAS-RICH Brackets was then imported into USS2-04 load model. A built PAS model was also intergrated into the load model.

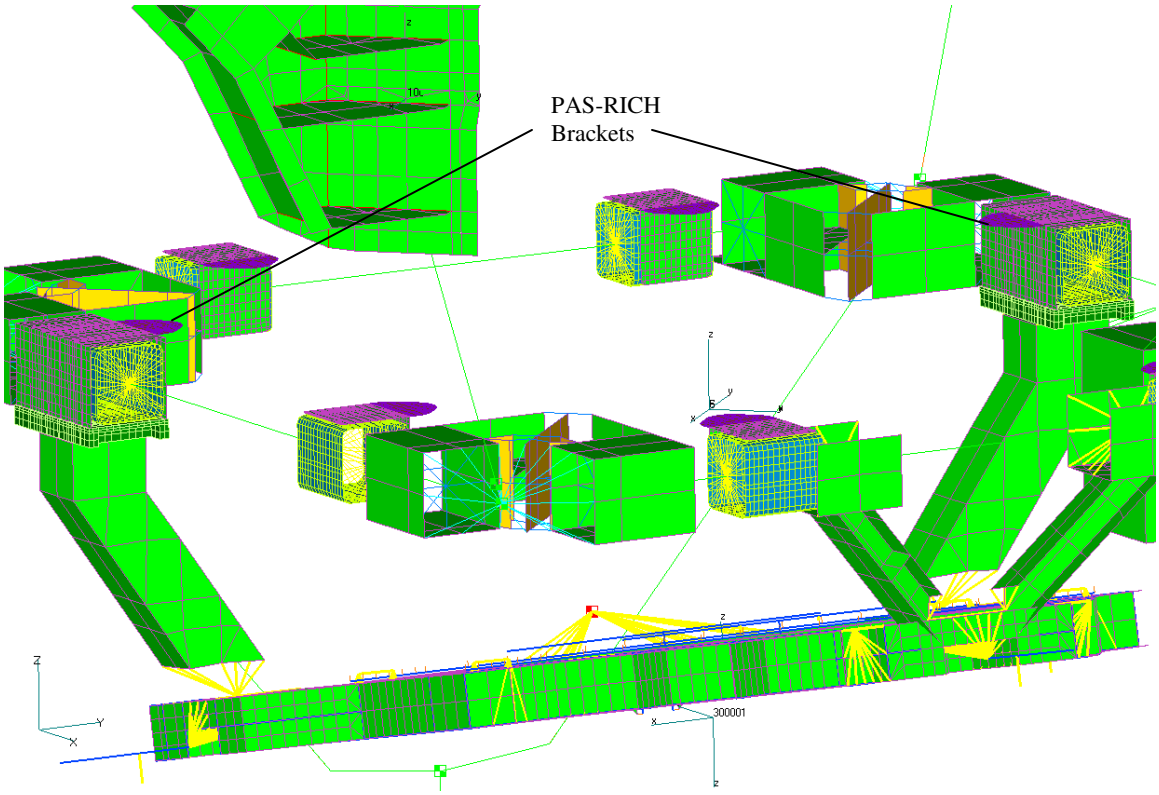

Figure 2.5.2.5-2: FEMAP Model of PAS-RICH Brackets

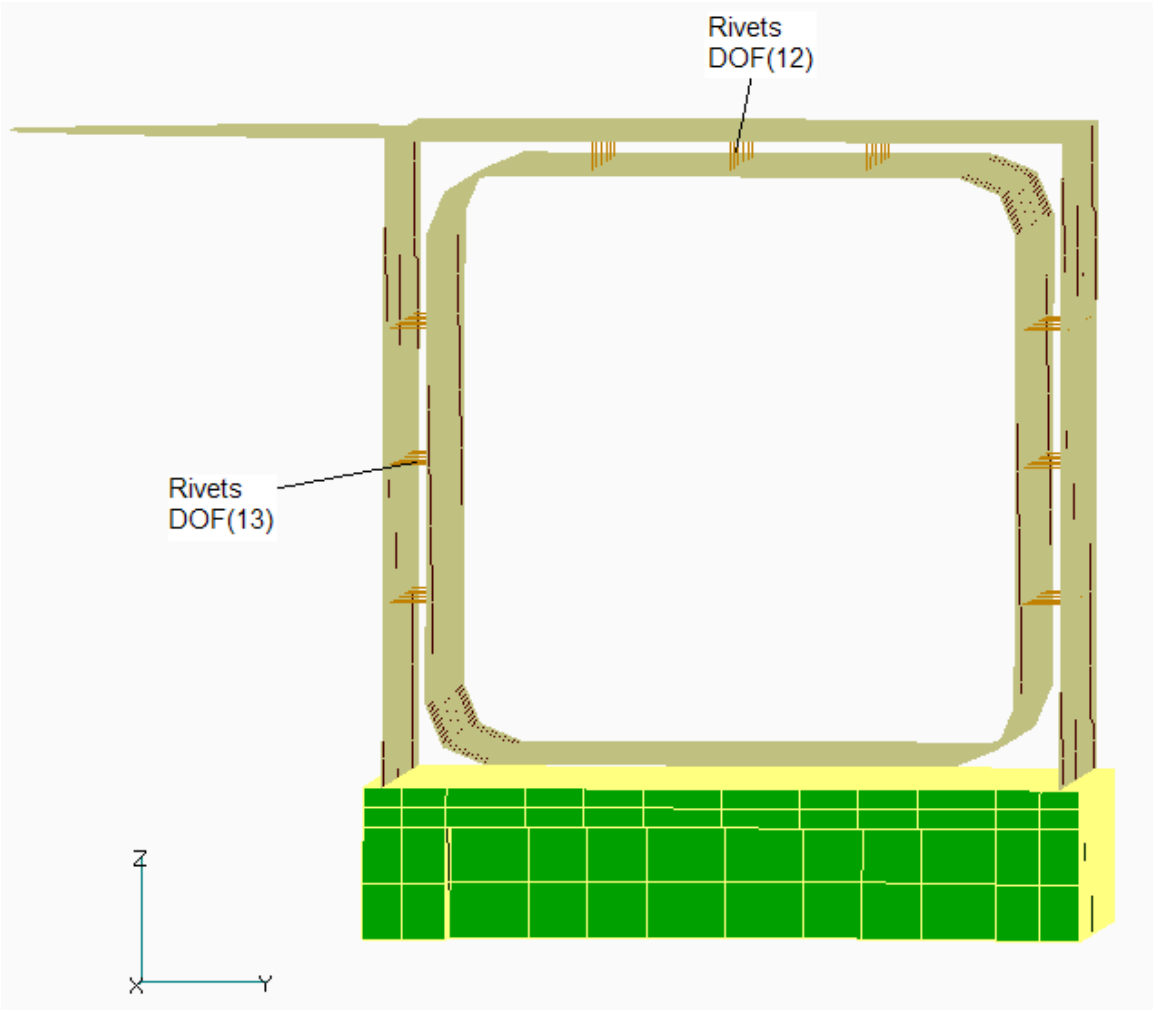

Figure 2.5.2.5-3: FEMAP Model of Rivets

The model was constrained with DOF's 1&3 at Trunnion 1&2 (see Figure 2.5.2.5-1), with DOF's 3 at Trunnion 3&4, and with DOF's 2 at Trunnion 5 for Launch and Landing conditions. The model was also constrained with DOF's 3 at C.G. of PAS Capture Bar, with DOF's 236 at two rear Guide Bars, and with DOF's 136 at front Guide Bar for On-Orbit condition.

All 192 load cases for Launch and Landing, and 8 load cases for On-Orbit were applied.

MSC/NASTRAN v.2005 was used as a solver for analyzing the complete math model of AMS-02.

Forces at rivet location were requested.

Table below shows details of model inputs.

Table 2.5.2.5-2: Inputs of Finite Element Model of PAS-RICH Brackets

DESCRIPTION	NODE #	ELEM #	TYPE	PROP#	MAT'L#	LC#	SPC#	COORD
pas rich bracket	200,001 - 212,802	203,001 - 204,624	plate	200,001 - 0.25" TK	200,001			
			plate	200,002 - 0.4375" TK				
		205,001 - 206,856	solid	200,021 - solid				
centerbody tube @pas rich		210,001 - 211,920	plate	200,011 - tube	200,001			
misc.								
		220,001 - 220,432	bar	200,003 - dummy	200,001			
rivets	215,001 - 215,504		rbe2					
		221,001 - 221,096	rsscon					
PAS	300,001 - 303,474	300,001 - 304,504		300,001 - 300,023	300,001 - 300,006	300,001	300,001	300,001 - 300,002

Model Checks

Rigid body checks were performed using MSC/NASTRAN. Results are shown below. The KGG, KNN and KFF matrices all pass with low strain energies.

```
*** USER INFORMATION MESSAGE 7570 (GPWG1D)
    RESULTS OF RIGID BODY CHECKS OF MATRIX KGG      (G-SET)  FOLLOW:
    PRINT RESULTS IN ALL SIX DIRECTIONS AGAINST THE LIMIT OF   1.000000E-02
        DIRECTION       STRAIN ENERGY       PASS/FAIL
        ---------       -------------       ---------
          1             5.314041E-08        PASS
          2             7.262543E-08        PASS
          3             3.534839E-08        PASS
          4             9.702608E-05        PASS
          5             4.916835E-05        PASS
          6             1.171079E-05        PASS

*** USER INFORMATION MESSAGE 7570 (GPWG1D)
    RESULTS OF RIGID BODY CHECKS OF MATRIX KNN      (N-SET)  FOLLOW:
    PRINT RESULTS IN ALL SIX DIRECTIONS AGAINST THE LIMIT OF   1.000000E-02
        DIRECTION       STRAIN ENERGY       PASS/FAIL
        ---------       -------------       ---------
          1             4.694130E-08        PASS
          2             7.125755E-08        PASS
          3             3.189959E-08        PASS
          4             8.980069E-05        PASS
          5             5.375610E-05        PASS
          6             2.025928E-05        PASS


*** USER INFORMATION MESSAGE 7570 (GPWG1D)
    RESULTS OF RIGID BODY CHECKS OF MATRIX KNN+AUTO (N+AUTOSPC-SET)  FOLLOW:
    PRINT RESULTS IN ALL SIX DIRECTIONS AGAINST THE LIMIT OF   1.000000E-02
        DIRECTION       STRAIN ENERGY       PASS/FAIL
        ---------       -------------       ---------
          1             4.694130E-08        PASS
          2             7.125755E-08        PASS
          3             3.189959E-08        PASS
          4             8.980069E-05        PASS
          5             5.375610E-05        PASS
          6             2.025928E-05        PASS
```

```
*** USER INFORMATION MESSAGE 7570 (GPWG1D)
    RESULTS OF RIGID BODY CHECKS OF MATRIX KFF      (F-SET)  FOLLOW:
    PRINT RESULTS IN ALL SIX DIRECTIONS AGAINST THE LIMIT OF   1.000000E-02
        DIRECTION       STRAIN ENERGY       PASS/FAIL
        ---------       -------------       ---------
          1             4.694130E-08        PASS
          2             7.125755E-08        PASS
          3             3.189959E-08        PASS
          4             8.980069E-05        PASS
          5             5.375610E-05        PASS
          6             2.025928E-05        PASS

*** USER INFORMATION MESSAGE 7570 (GPWG1D)
    RESULTS OF RIGID BODY CHECKS OF MATRIX KAA1     (A-SET)  FOLLOW:
    PRINT RESULTS IN ALL SIX DIRECTIONS AGAINST THE LIMIT OF   1.000000E-02
        DIRECTION       STRAIN ENERGY       PASS/FAIL
        ---------       -------------       ---------
          1             4.694130E-08        PASS
          2             7.125755E-08        PASS
          3             3.189959E-08        PASS
          4             8.980069E-05        PASS
          5             5.375610E-05        PASS
          6             2.025928E-05        PASS
```

A further check is that of rigid body modes. The first 10 unconstrained modes are shown below. There are six rigid body modes (~ 0.0), and then good separation with the first non-rigid body mode.

Table 2.5.2.5-3: Eigenvalue Summary of PAS-RICH Brackets Model

R E A L E I G E N V A L U E S						
MODE NO.	EXTRACTION ORDER	EIGENVALUE	RADIANS	CYCLES	GENERALIZED MASS	GENERALIZED STIFFNESS
1	1	-1.06E-05	3.25E-03	5.18E-04	1.00E+00	-1.06E-05
2	2	-1.56E-06	1.25E-03	1.99E-04	1.00E+00	-1.56E-06
3	3	5.29E-06	2.30E-03	3.66E-04	1.00E+00	5.29E-06
4	4	6.34E-06	2.52E-03	4.01E-04	1.00E+00	6.34E-06
5	5	8.82E-06	2.97E-03	4.73E-04	1.00E+00	8.82E-06
6	6	1.12E-05	3.34E-03	5.32E-04	1.00E+00	1.12E-05
7	7	3.58E+07	5.98E+03	9.52E+02	1.00E+00	3.58E+07
8	8	5.07E+07	7.12E+03	1.13E+03	1.00E+00	5.07E+07
9	9	1.24E+08	1.12E+04	1.78E+03	1.00E+00	1.24E+08
10	10	1.69E+08	1.30E+04	2.07E+03	1.00E+00	1.69E+08

Additional check is comparision of the interface loads between the load model and the detail model. The loads are picked randomly. Loads in both models are closely matched.

Table 2.5.2.5-4: Interface Loads (lbf) in Load Model 2-04

Case	***64001***	***64002***	***64003***	***64004***	***64011***	***64012***	***64013***	***64014***
1005(Fx)	-10265.5	-4218.5	9910.0	7635.5	-785.8	987.6	-3250.9	1119.0
1028(Fy)	19044.8	-16676.0	3404.8	2433.2	-12722.8	7581.0	-11633.1	-519.6
2033(Fz)	-1601.8	-1942.0	645.2	437.5	-6117.5	-9489.8	-3363.9	5239.9
2047(Fx)	-1910.6	1228.8	-2868.4	-4166.4	7219.1	5784.0	3041.0	6638.5
4040(Fy)	-543.2	11872.4	8070.0	-3118.7	-1324.4	-7806.0	-6032.6	3874.0
4061(Fz)	-3360.5	-834.1	-187.7	1137.0	13878.8	-1881.9	15033.1	21524.6

Table 2.5.2.5-5: Interface Loads (lbf) in PAS-RICH Brackets Model

Case	***64001***	***64002***	***64003***	***64004***	***64011***	***64012***	***64013***	***64014***
1005(Fx)	-10454.2	-4312.0	10003.4	7718.2	-876.5	984.5	-3296.8	1074.5
1028(Fy)	18937.1	-16619.2	3365.7	2397.4	-12670.1	7579.1	-11506.6	-520.1
2033(Fz)	-1601.8	-1942.6	645.1	434.9	-6112.6	-9495.3	-3371.0	5249.1
2047(Fx)	-1905.3	1222.7	-2869.7	-4156.4	7248.5	5782.5	3051.6	6651.5
4040(Fy)	-535.4	11877.4	8075.0	-3112.0	-1326.9	-7798.7	-6046.1	3858.6
4061(Fz)	-3361.7	-832.2	-186.9	1132.7	13894.9	-1891.3	15009.3	21544.4

Table 2.5.2.5-6: Load Differences (lbf) between Two Models

Load	LOAD DIFFERENCES BETWEEN TWO MODELS							
Case	***64001***	***64002***	***64003***	***64004***	***64011***	***64012***	***64013***	***64014***
1005(Fx)	188.7	93.5	-93.4	-82.7	90.7	3.1	45.8	44.5
1028(Fy)	107.7	-56.8	39.1	35.8	-52.7	2.0	-126.4	0.5
2033(Fz)	0.0	0.6	0.1	2.6	-4.9	5.5	7.1	-9.2
2047(Fx)	-5.2	6.1	1.3	-10.0	-29.4	1.5	-10.5	-13.0
4040(Fy)	-7.8	-5.0	-5.1	-6.7	2.5	-7.4	13.5	15.4
4061(Fz)	1.2	-1.8	-0.8	4.3	-16.1	9.3	23.9	-19.8

Note: 1. Negative sign in Table 2.5.2.5-6 means load in Detail model greater than in Load model.

Material and Temperature

The Rivets are Monel Alloy 400 (UNS N04400). Material properties of Monel Alloy 400 are taken from the specification of NAS1398M8-9. Temperature limits are based upon *ICD-2-19001 (Shuttle Orbiter / Cargo Standard Interfaces), Revision-L.* For Launch condition, the temperature of 150°F is applied. For Landing condition, the temperature of 220°F is applied. For On-Orbit condition, the temperature of 200°F is applied.

Analysis

All MPC forces for Rivets are compared to the shear strength of Monel Alloy 400. All margins of safety are positive.

Check of Rivets, NAS1398M8-9 at PAS RICH Brackets to Centerbody Tubes

Rivets are NAS1398M8-9, 0.25 in., blind protruding head locked spindle; Monel Alloy 400 (UNS N04400).

Rivet diameter, $D := 0.25 \cdot in$

Shear area, $A := \frac{\beta \cdot D^2}{4}$ $\qquad A = 0.049\,in^2$

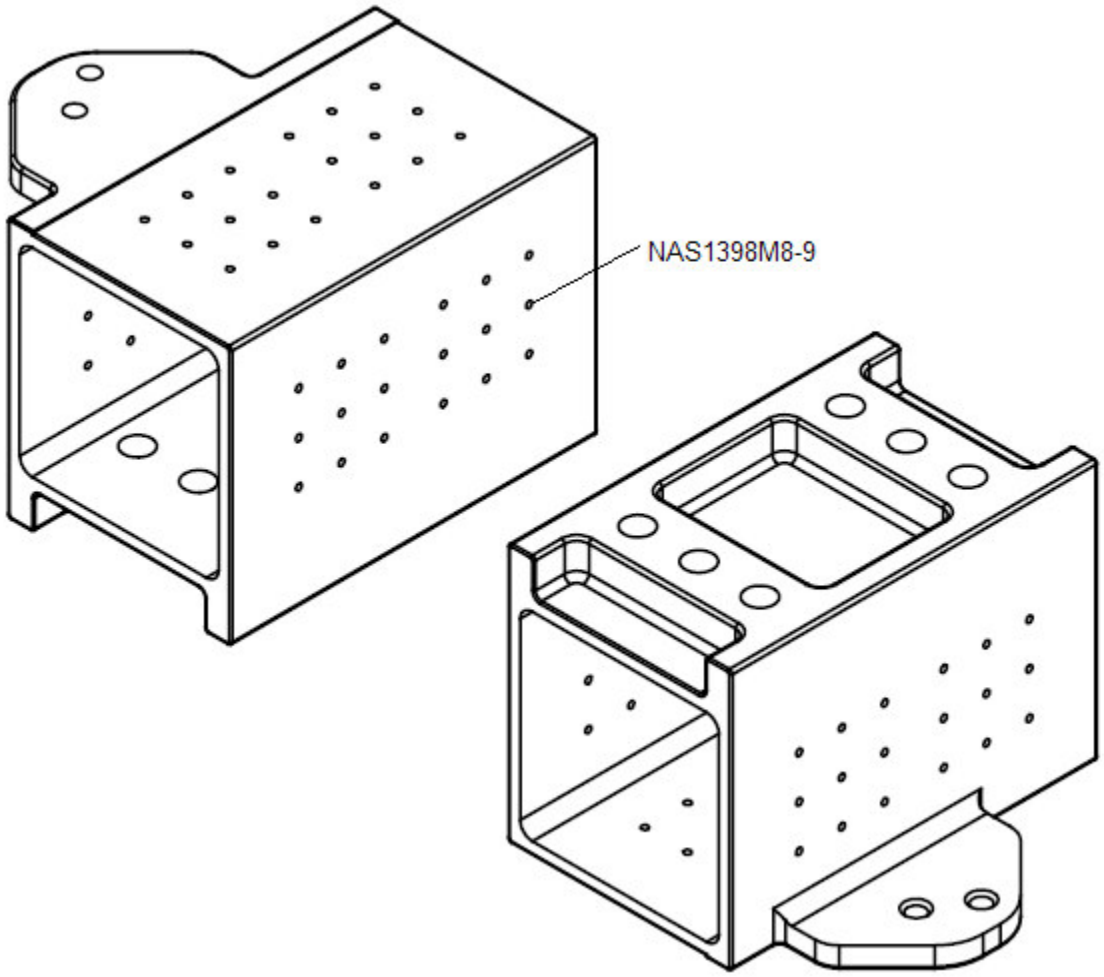

Max. rivet shear strength @ room temperature $Fsu := 48500 \cdot psi$ *(Ref. www.specialmetals.com, MONEL Alloy 400, Table 10)*

Table 10 - Shear Strength of MONEL Alloy 400 Rivet Wire

Property	Condition	
	Annealed	B & S No. 1[a]
Shear Strength, ksi		
Room	48.5	54.5
600[b]	45.0	52.0
800[b]	37.0	47.5
1000[b]	29.0	38.0
800[c]	38.5	49.5
1000[c]	30.5	38.5
Tensile Strength, ksi	78.5	88.0
Yield Strength (0.2% Offset), ksi	46.0	75.5
Elongation, %	41	18

[a]Corresponds to the approximate strength of the shank of a headed rivet.
[b]30 min at temperature before testing.
[c]24 hr at temperature before testing.

By interpolation method, shear strengths at specific temperatures below were calculated:

@ 220°F: $Fsu1 := 45146 \cdot psi$

@ 200°F: $Fsu2 := 45594 \cdot psi$

Shear allowables,

@ 220°F: $Psu1 := Fsu1 \cdot A$ $Psu1 = 2216\,lbf$

@ 200°F: $Psu2 := Fsu2 \cdot A$ $Psu2 = 2238\,lbf$

Factor of Safety,

+ For Launch and Landing: $FSu1 := 1.4$

+ For On-Orbit: $FSu2 := 2.0$

NASPOST inputs

Read in the external datum from NASPOST results: *(see p.2.5.2.5-15 for SORT format)*

- Shear forces are retracted at GRID IDs represented location of rivets.

- All 192 load cases for Launch and Landing, and 8 cases for On-Orbit are included.

$load1 := READPRN("rivetPR.inp")$ *(Reading rivet loads from Launch and Landing cases)*

$i := 1..rows(load1)$ $ID1 := load1^{\langle 1 \rangle}$ $LC1 := load1^{\langle 2 \rangle}$

$shear1 := load1^{\langle 3 \rangle}$ $shear2 := load1^{\langle 4 \rangle}$

$load2 := READPRN("rivetPR\text{-}or.inp")$ *(Reading rivet loads from On-Orbit cases)*

$j := 1..rows(load2)$ $ID2 := load2^{\langle 1 \rangle}$ $LC2 := load2^{\langle 2 \rangle}$

$shear3 := load2^{\langle 3 \rangle}$ $shear4 := load2^{\langle 4 \rangle}$

* Note that "rivetPR.inp" and "rivetPR-or.inp" were generated from NASPOST results (.LIS files) by just removing all texts and comments.

	+ For Launch and Landing:	+ For On-Orbit:
Total shear per rivet:	$Ps1_i := \sqrt{(shear1_i)^2 + (shear2_i)^2} \cdot lbf$	$Ps2_j := \sqrt{(shear3_j)^2 + (shear4_j)^2} \cdot lbf$

Margin of Safety, $MS1_i := \frac{Psu1}{FSu1 \cdot Ps1_i} - 1$ $MS2_j := \frac{Psu2}{FSu2 \cdot Ps2_j} - 1$

Minimum MS, $MSrivetPR := \min(MS1)$ $MSrivetPRor := \min(MS2)$

$MSrivetPR = 0.73$ $MSrivetPRor = 0.27$

*** GRID and Load Case IDs, shear forces, and margin of safety where minimum MS was calculated are shown below.

+ Launch and Landing:

$output := augment(ID1, LC1)$ $output := augment(output, shear1)$ $output := augment(output, shear2)$

$output := augment(output, MS1)$ $sorted1 := csort(output, 5)$

GRID LC Shears MS

$submatrix(sorted1, 1, 1, 1, cols(sorted1)) = (215315 \quad 1019 \quad -760 \quad -512 \quad 0.727379)$

+ On-Orbit:

$output := augment(ID2, LC2)$ $output := augment(output, shear3)$ $output := augment(output, shear4)$

$output := augment(output, MS2)$ $sorted1 := csort(output, 5)$

GRID LC Shears MS

$submatrix(sorted1, 1, 1, 1, cols(sorted1)) = (215311 \quad 200008 \quad -489 \quad 736 \quad 0.266406)$

REFERENCE: NASPOST SORT script

```
$
SELECT MPC-FORCES;IDS=215265 THRU 215282 215373 THRU 215390
  SORT VAR = MAXABS(FX);OPT=0
  PRINT 1 2;
  HEADING = 'PAS RICH RIVETS: MPC FORCE / Fx'
$
SELECT MPC-FORCES;IDS=215283 THRU 215318 215391 THRU 215426
  SORT VAR = MAXABS(FX);OPT=0
  PRINT 1 3;
  HEADING = 'PAS RICH RIVETS: MPC FORCE / Fx'
$
```

2.5.3 Keel Assembly Riveted Joints

Keel Assembly Riveted Joints

The Keel Assembly Rivet Analysis is performed in the following report sections.

2.5.3.1	Keel Angle Joint to Keel Tube
2.5.3.2	Keel Tube to Keel Block

2.5.3.1 Keel Angle Joint to Keel Tube

Prepared By	B. Dyer	05/03/06	Engineering and Science Contract Group *Structural Analysis Section*	File Name keeljnttokeeltube.mcd
Revised By	G. Reyes	06/23/09		
Checked By	C. Bala			Drawing No. SEG39135768
Title	Keel Angle Joint to Keel Tube Rivet Analysis			

Keel Angle Joint to Keel Tube Rivet Analysis

The keel angle joint SDG39135769 connects to the keel tube SDG39135771 in 2 locations. The keel angle joint is fastened to the keel tube, with NAS1398DFC8, 0.25 in rivets. The keel angle joint is machined from 7050-T7451 plate and the keel tube is extruded from 7075-T73511. CBEAM elements 1305 and 1306 in the loads model represents the portion of the keel tube that interfaces with the keel angle joint. The rivet pattern centroid is 5.498 in from end A of the beam element. Element length is 7.595 in. See Appendix C4 for AMS Rivet Pattern Location Table.

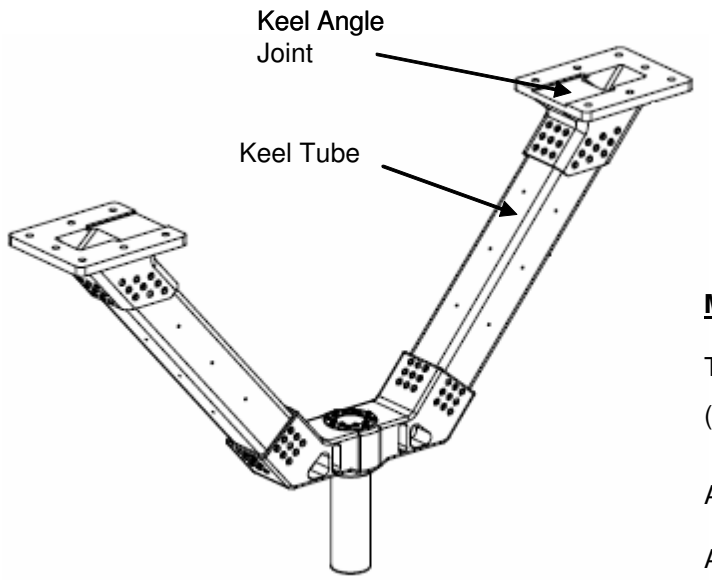

Material Strength for Rivets:

Rivets are NAS1398 type D, 0.25 in. blind protruding head 2017 Aluminum rivets

(Ref. NAS1400, sheet 5)

Max. rivet shear strength $Fs := 1970 \cdot lbf$

Material Strength for Keel Tube:

Tube material is extruded 7075-T73511 with e/D=2.0

(Ref. MIL-HDBK-5J, Table 3.7.6.0(g2))

Allowable bearing strength $Fbru := 119000 \cdot psi$

Allowable shear strength $Fsu := 35000 \cdot psi$

Factors of safety:

Ultimate Factor of Safety: $FSu := 1.4$

Fitting Factor: $FF := 1.15$

Temperature:

Maximum Temperature $Tmax := 150 \cdot deg$

(Ref. Appendix C2, AMS-02 Temperature Table)

Temperature Correction Factor (For Fs) $cf := .98$

(Ref. Appendix C13)

Temperature Correction Factor (For Fsu) $cd := .99$

(Ref. MIL-HDBK-5J, Figure 3.7.6.1.2(b))

Temperature Correction Factor (For Fbru) $cb := .92$

(Ref. MIL-HDBK-5J, Figure 3.7.6.1(a))

Loads model 2-06 was run in NASTRAN for 192 load cases. Beam element forces were recovered, and given in the data file "keeljnttokeeltube.dat" for elements 1305 and 1306.

$data := READPRN(\text{"keeljnttokeeltube.dat"})$ $ORIGIN := 1$ $i := 1 .. rows(data)$

Loads from Beam End A:

Axial Load $Fxa_i := data_{i,7} \cdot lbf$

Shear in Y axis $Fya_i := data_{i,5} \cdot lbf$

Shear in Z axis $Fza_i := data_{i,6} \cdot lbf$

Torsion $Mxa_i := data_{i,8} \cdot in \cdot lbf$

Moment about Y axis $Mya_i := -data_{i,4} \cdot in \cdot lbf$

Moment about Z axis $Mza_i := data_{i,3} \cdot in \cdot lbf$

$ID_i := data_{i,1}$ $LC_i := data_{i,2}$

Loads from Beam End B:

Axial Load $Fxb_i := data_{i,13} \cdot lbf$

Shear in Y axis $Fyb_i := data_{i,11} \cdot lbf$

Shear in Z axis $Fzb_i := data_{i,12} \cdot lbf$

Torsion $Mxb_i := data_{i,14} \cdot in \cdot lbf$

Moment about Y axis $Myb_i := -data_{i,10} \cdot in \cdot lbf$

Moment about Z axis $Mzb_i := data_{i,9} \cdot in \cdot lbf$

Beam Section Properties:

Thickness of tube $t := 0.25 \cdot in$ (Ref. SDG39135771)

Width of tube $a := 4.0 \cdot in$ (Ref. SDG39135771)

Depth of tube $b := 4.0 \cdot in$ (Ref. SDG39135771)

Enclosed area of mean width and mean height $Am := (a - t) \cdot (b - t)$ $Am = 14.06 \cdot in^2$

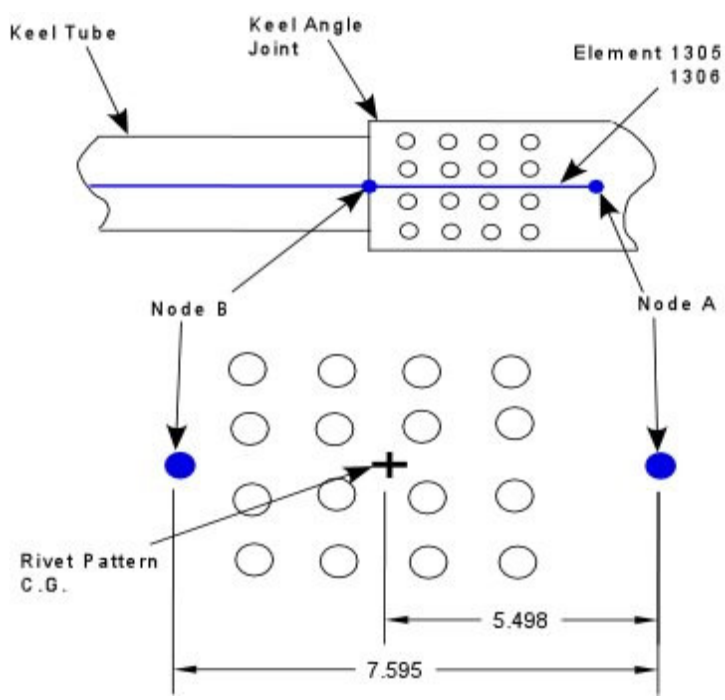

Figure 2.5.3.1-1 Rivet Pattern Dimensions for Beam Element Ends A and B.
Note: Figure is for reference only.

Bending Moment Interpolation:

NASTRAN gives beam moments at ends A and B of the beam element. The center of gravity of the rivet pattern falls between nodes A and B, therefore, the moment at the center of the rivet pattern needs to be interpolated.

Distance from end A to the center of the rivet pattern $c := 5.498 \cdot in$

Total length of beam element $d := 7.595 \cdot in$

(See Figure 2.5.3.1-1 and Ref. Appendix C4)

Moment My:

Difference $Mydiff_i := \left(Mya_i - Myb_i\right)$

Linearly interpolate at centroid of rivets

$$My1_i := \frac{c}{d} \cdot Mydiff_i \qquad My2_i := \frac{d-c}{d} \cdot Mydiff_i$$

Moment My interpolated at centroid of rivets

$$My := Myb + My2$$

Moment Mz:

Difference $Mzdiff_i := \left(Mza_i - Mzb_i\right)$

Linearly interpolate at centroid of rivets

$$Mz1_i := \frac{c}{d} \cdot Mzdiff_i \qquad Mz2_i := \frac{d-c}{d} \cdot Mzdiff_i$$

Moment Mz interpolated at centroid of rivets

$$Mz := Mzb + Mz2$$

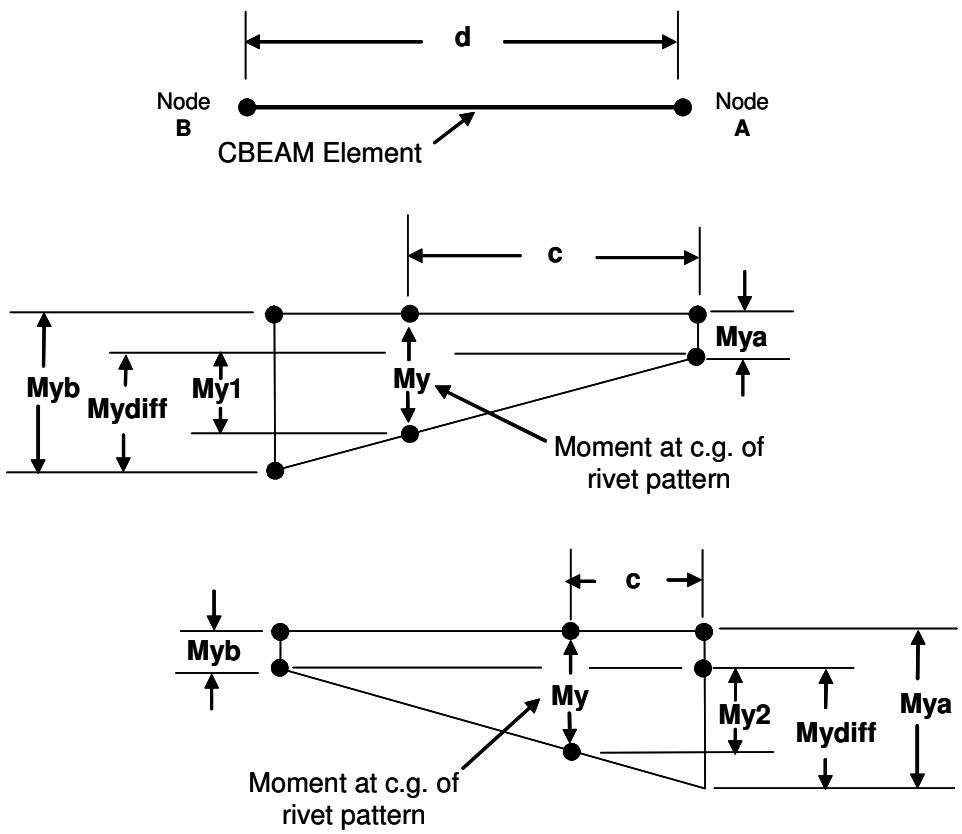

Free Body Diagram for Moment Distribution for My Interpolation
(Note: Similar moment distribution is used for Mz interpolation.)

Load in Rivets at Diagonal Sill Bracket:

Total Number of rivets in beam end:

$Nsps := 36$

Number of rivets reacting Fz shear load:

$psz := 18$

Number of rivets reacting Fy shear loads:

$psy := 18$

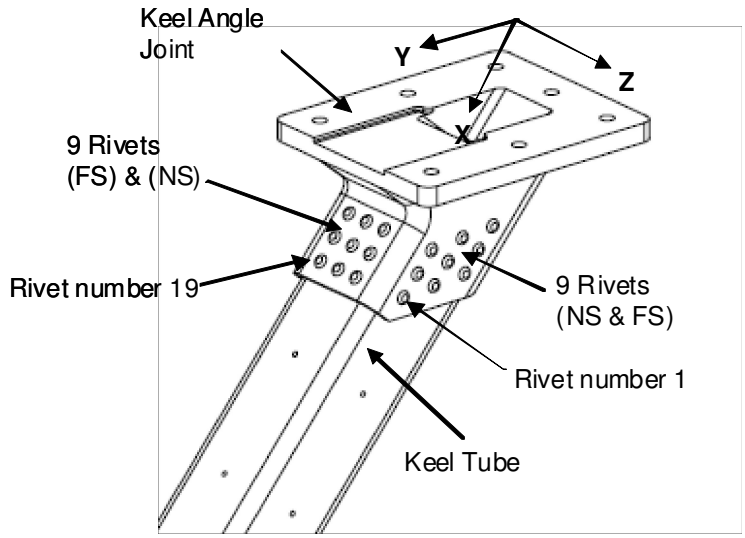

Shear load/rivet due to Fy $\quad Fsry := \frac{Fya}{psy} \quad max(Fsry) = 30.3 \cdot lbf$

Shear load/rivet due to Fz $\quad Fsrz := \frac{Fza}{psz} \quad max(Fsrz) = 35.3 \cdot lbf$

Note: The Fya and Fza forces have the same magnitude as the Fyb and Fzb forces. The end A forces are used above.

Shear flow due to torsion (Ref. Bruhn section A6.8) $\quad Fsrt := \frac{Mxa}{2 \cdot Am} \quad max(Fsrt) = 93.1 \cdot \frac{lbf}{in}$

Note: The shear load (Fsrt) is used to calculate the torsional load (Psrt) in the rivet due to the pitch on the rivet pattern. See Figure 2.5.3.1-2.

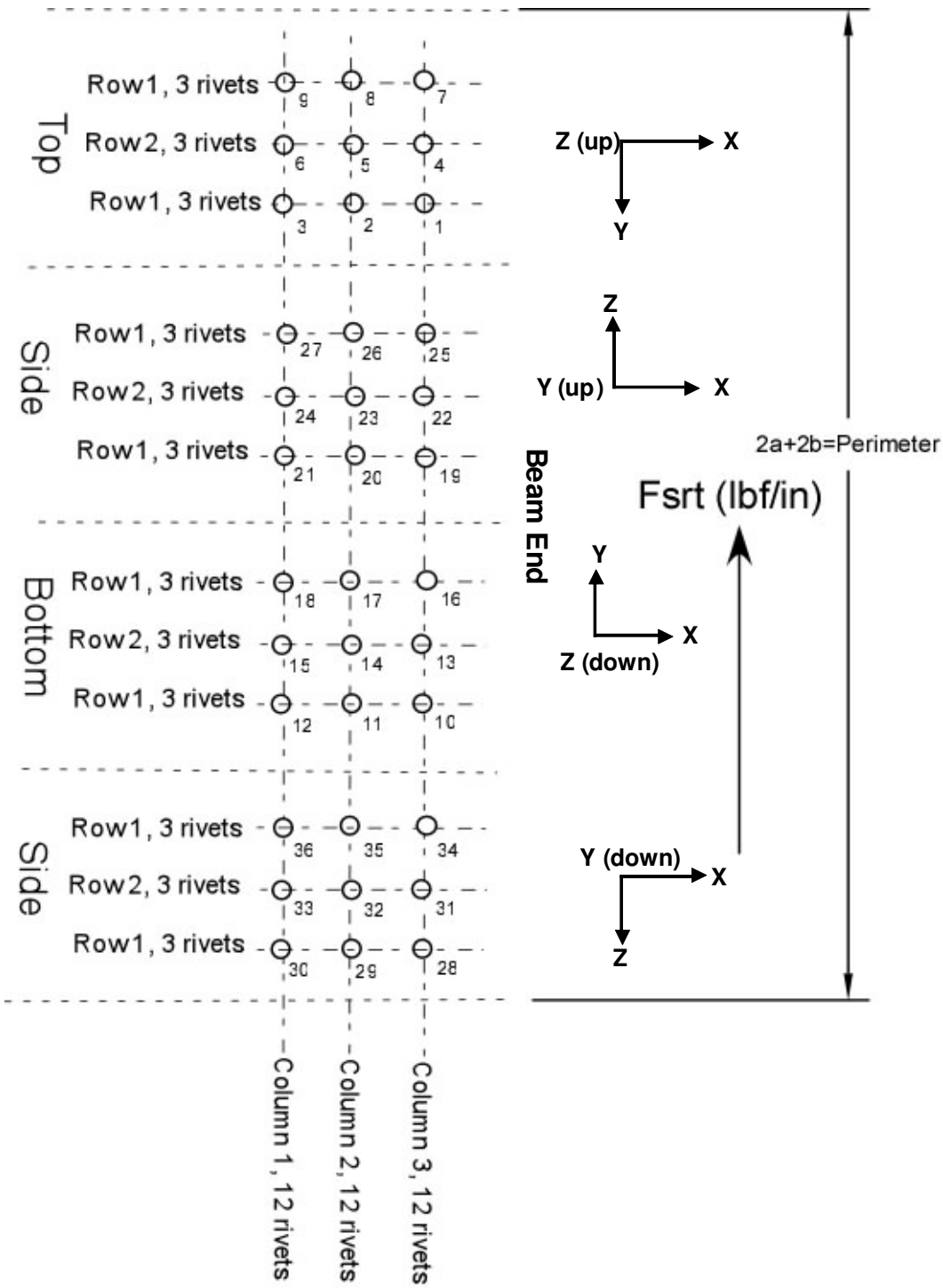

Figure 2.5.3.1-2 Layout of Rivet Patterns used to Calculate Rivet Pitch for Torsional Load

Calculation of Rivet Pitch:

It is assumed that all rivets share the torsion load equally. Therefore, each column of rivets has the same maximum load per rivet due to torsion.

Perimeter of rivet pattern $per := 2 \cdot a + 2 \cdot b$ $per = 16 \cdot in$

Loads in rivet due to torsion $Psrt := Fsrt \cdot \left(\frac{per}{Nsps} \right)$ $\max(Psrt) = 41.4 \cdot lbf$

Shear load in rivets due to beam axial load $Prta := \frac{Fxa}{Nsps}$ $\max(Prta) = 523.7 \cdot lbf$

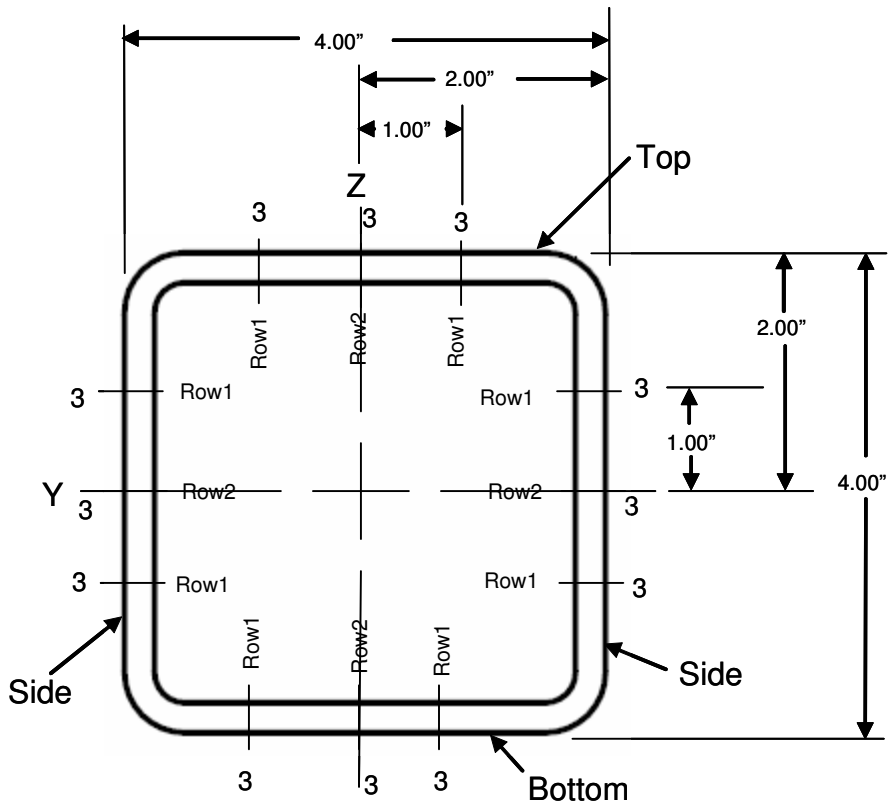

Note: Figure is for reference only.

Rivet Dimension Variables:
(Ref. SDG39135769)

$z1 := 1.00 \cdot in$

$z2 := 2.00 \cdot in$

$z3 := 4.00 \cdot in$

$y1 := 1.00 \cdot in$

$y2 := 2.00 \cdot in$

$y3 := 4.00 \cdot in$

Eccentrically Loaded Rivets due to My and Mz Moments:

Rivet Coordinate System Data

$j := 1 .. rows(coord)$ Counter for Coordinate Points

$x_j := coord_{j,2}$ Rivet Coordinate Points for x-direction

$y_j := coord_{j,3}$ Rivet Coordinate Points for y-direction

$z_j := coord_{j,4}$ Rivet Coordinate Points for z-direction

$$rivet_counter_j := \frac{coord_{j,1}}{in}$$

For Moment My:

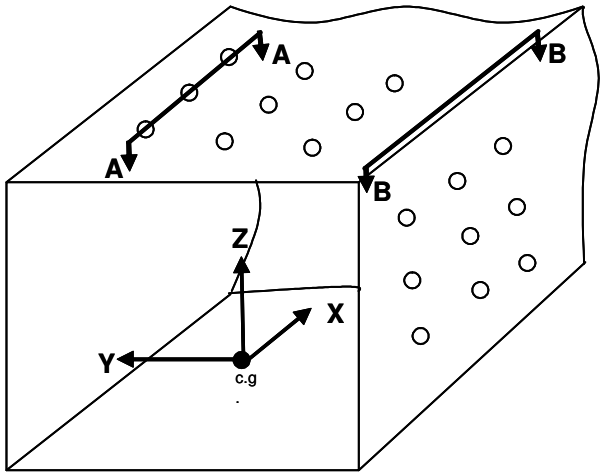

Eccentrically Loaded Rivet Pattern about My

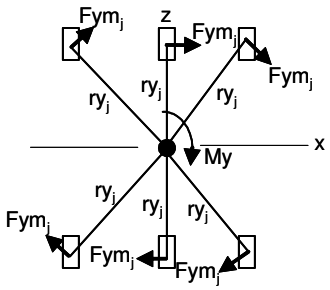

Cross-Section A-A

(Row 1, 6 rivets

Row 2, 6 rivets)

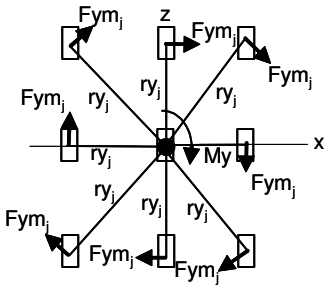

Cross-Section B-B

(Represents both sides, 18 rivets)

Note: Figure is for reference only.

$$ry_j := \left[\left(x_j\right)^2 + \left(z_j\right)^2\right]^{\frac{1}{2}}$$

Radial distance to each rivet from the centroid of the rivet pattern

$$sigry := \sum_{j=1}^{rows(coord)} \left(ry_j\right)^2$$

Sum of the radial directions for all rivets in the rivet pattern

$$\beta y_j := atan2\left(x_j, z_j\right)$$

Angle between resultant vector
and tension or shear vectors

(Note: The angle θ is defined off of the x-axis.
See below.)

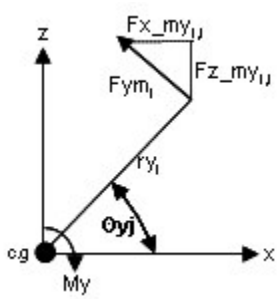

$$Fym_{i,j} := \frac{My_i \cdot ry_j}{sigry}$$

Resultant Load at
Each Rivet

$$Fz_my_{i,j} := Fym_{i,j} \cdot \sin\left(\frac{u}{2} - \beta y_j\right)$$

z - component of Fym

$$Fx_my_{i,j} := Fym_{i,j} \cdot -\cos\left(\frac{u}{2} - \beta y_j\right)$$

x - component of Fym

For Moment Mz:

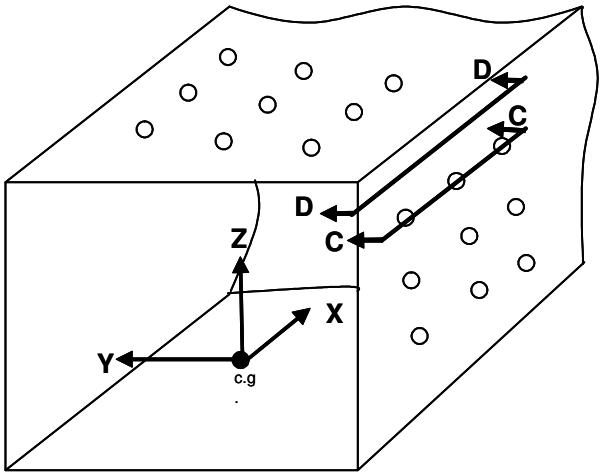

Eccentrically Loaded Rivet Pattern about Mz

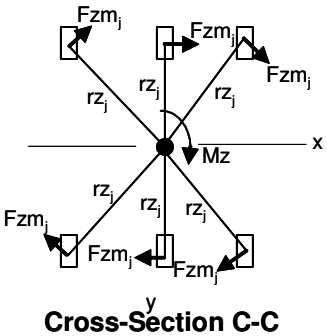

Cross-Section C-C

(Row 1, 6 rivets

Row 2, 6 rivets)

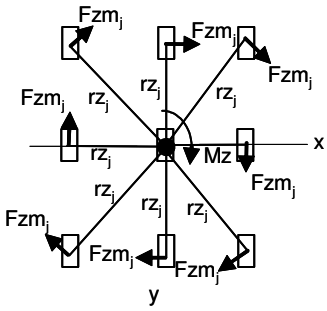

Cross-Section D-D

(Represents both sides, 18 rivets)

Note: Figure is for reference only.

$$rz_j := \left[\left(x_j\right)^2 + \left(y_j\right)^2\right]^{\frac{1}{2}}$$

Radial distance to each rivet from the centroid of the rivet pattern

$$sigrz := \sum_{j=1}^{rows(coord)} \left(rz_j\right)^2$$

Sum of the radial directions for all rivets in the rivet pattern

$$\beta z_j := atan2\left(x_j, y_j\right)$$

Angle between resultant vector and tension or shear vectors

$$Fzm_{i,j} := \frac{(-Mz)_i \cdot rz_j}{sigrz}$$

Resultant Load at Each Rivet

$$\max(Fzm) = 243.4 \cdot lbf$$

(Note: The angle θ is defined off of the x-axis.
See below.)

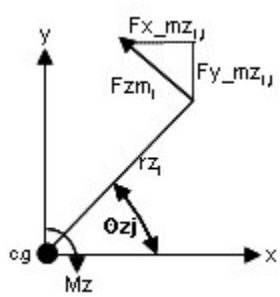

$$Fy_mz_{i,j} := Fzm_{i,j} \cdot \sin\left(\frac{u}{2} - \beta z_j\right)$$

y - component of Fzm

$$Fx_mz_{i,j} := Fzm_{i,j} \cdot -\cos\left(\frac{u}{2} - \beta z_j\right)$$

x - component of Fzm

$$F_{i,j} := \begin{cases} Fz_my_{i,j} & \text{if } rivet_counter_j \le 18 \\ Fy_mz_{i,j} & \text{otherwise} \end{cases}$$

Total Axial Load due to My and Mz Moments

$$\max\left(\overrightarrow{|F|}\right) = 207.8 \cdot lbf$$

Note: The axial loading is reacted by the beam and socket and not taken by the rivet. See section 2.3.3 for beam and socket analysis.

Total Rivet Shear Load:

$$Pt_{i,j} := \begin{cases} \sqrt{\left(Prta_i + Fx_my_{i,j} + Fx_mz_{i,j}\right)^2 + \left(Psrt_i + Fsry_i + Fy_mz_{i,j}\right)^2} & \text{if } j \le 18 \\ \sqrt{\left(Prta_i + Fx_my_{i,j} + Fx_mz_{i,j}\right)^2 + \left(Psrt_i + Fsrz_i + Fz_my_{i,j}\right)^2} & \text{otherwise} \end{cases}$$

$\max(Pt) = 681.7 \cdot lbf$

Margin of safety for Total Rivet Load:

$Pt_{29,19} = 681.7 \cdot lbf$

$$MS1t := \frac{Fs \cdot cf}{Pt \cdot FSu \cdot FF} - 1$$

$\min(MS1t) = 0.76$

(Note: Fitting Factor (FF) included for misalignment, different shim thicknesses, etc. ...)

The following will output an array for each row of rivets with element identity, load case, load, and margin of safety from left to right.

$output := augment(ID, LC, MS1t)$

$rows(output) = 384$ Number of rows in the "output" array

$cols(output) = 38$ Number of columns in the "output" array

The "output" array is then searched for the location of the minimum margin. The match function is used to locate the minimum margin of safety and the element identity, load case, rivet location, and maximum load are pulled from the array.

$$match(\min(MS1t), MS1t) = \begin{bmatrix} 29 \\ 19 \end{bmatrix}$$

$min_LC := output_{29,2}$ Load Case for Minimum Margin of Safety

$min_ID := output_{29,1}$ Element ID for Minimum Margin of Safety

Rivet number 19 is the rivet with the minimum margin of safety of 0.76.

Minimum Margin of Safety:

Minimum Margin of Safety	$\min(MS1t) = 0.76$
Element ID for Minimum Margin of Safety	$min_ID = 1305$
Load Case for Minimum Margin of Safety	$min_LC = 1015$
Maximum Rivet Load for Minimum Margin of Safety	$\max(Pt) = 681.7 \cdot lbf$
Rivets with Minimum Margin of Safety	Rivet numbers 19 (See figure 2.5.3.1 - 2 for rivet location)

Bearing on Hole Wall:

Hole diameter $dh := 0.257 \cdot in$ (Ref. SEG39135768)

Tube thickness $tp := 0.25 \cdot in$ (Ref. SDG3913571)

Bearing area $Ab := dh \cdot tp$ $Ab = 0.064 \cdot in^2$

Max. load per rivet $max(Pt) = 681.7 \cdot lbf$

Max. bearing stress $b := \frac{max(Pt)}{Ab}$ $b = 10610.7 \cdot psi$

Margin of safety $MSb := \frac{Fbru \cdot cb}{b \cdot FSu \cdot FF} - 1$ $MSb = 5.41$

Shear tear out:

Edge distance $e := 0.750 \cdot in$ (Ref. SDG39135769)

Note: Using this e is conservative, since actual rivet force is in general at some angle.

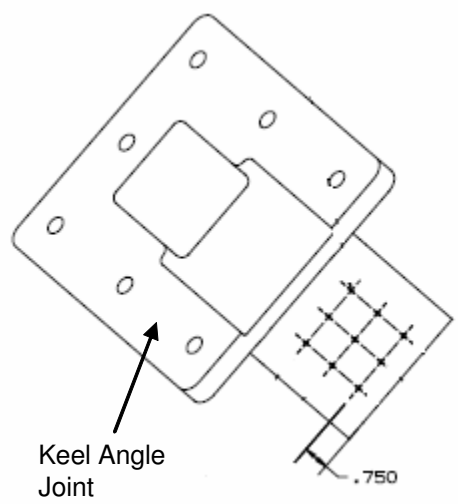

Hole diameter $dh := 0.257 \cdot in$

E over D ratio $\frac{e}{dh} = 2.918$

Tube thickness $tp := 0.25 \cdot in$

Shear out area $As := 2 \cdot \left(e - \frac{dh}{2} \cdot \cos(40 \cdot deg)\right) \cdot tp$ $As = 0.326 \cdot in^2$

Max. load per rivet $max(Pt) = 681.7 \cdot lbf$

Max. shear tear out stress $=s := \frac{max(Pt)}{As}$ $=s = 2092.6 \cdot psi$

Margin of safety $MSsh := \frac{Fsu \cdot cd}{=s \cdot FSu \cdot FF} - 1$ $MSsh = 9.28$

2.5.3.2 Keel Tube to Keel Block

Prepared By	B. Dyer	05/04/06	Engineering and Science Contract Group *Structural Analysis Section*	File Name keelblock_rivets.mcd
Revised By	G. Reyes	06/23/09		
Checked By	C. Bala			Drawing No. SDG39135770
Title	Keel Block to Keel Tube Rivet Analysis			

Keel Block to Keel Tube Rivet Analysis

The Keel Block SDG39135770-301 attaches to the Keel Tube SDG39135771-301 with 9 rivets (SDG39135768) per side on all four sides, with NAS1398DFC8-9, 0.25 in Aluminum alloy rivets. There are a total of 36 rivets.
The Keel Block is machined from 7050-T7451 plate and the Keel Tube is extruded from 7075-T73511. CBEAM elements 1307 and 1308 in the loads model 2-06 represents the portion of the Keel Block that interfaces with the Keel Tube. The rivet pattern centroid is 1.395 in from end B of the beam element Figure 2.5.3.2-1. Element length is 3.577 in. See Appendix C4 for AMS Rivet Pattern Location Table.

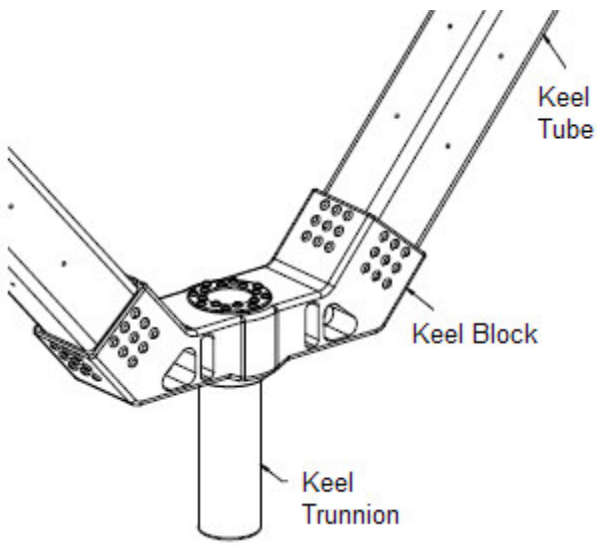

Material Strength for Rivets:

Rivets are NAS1398DFC8-9, 0.25 in. blind protruding head Aluminum rivets

(Ref. MIL-HDBK-5H, Table 8.1.3.1.2(d1))

Max. rivet shear strength $Fs := 1970 \cdot lbf$

Material Strength for Keel Tube:

Tube material is extruded 7075-T7351 with e/D=2.0

(Ref. MIL-HDBK-5J, Table 3.7.6.0(g2))

Allowable bearing strength $Fbru := 119000 \cdot psi$

Allowable shear strength $Fsu := 35000 \cdot psi$

Factors of safety:

Ultimate Factor of Safety: $FSu := 1.4$

Fitting Factor: $FF := 1.15$

Temperature:

Maximum Temperature $Tmax := 150 \cdot deg$

(Ref. Appendix C2, AMS-02 Temperature Table)

Temperature Correction Factor (For Fs) $cf := .98$

(Ref. Appendix C13)

Temperature Correction Factor (For Fsu) $cd := .99$

(Ref. MIL-HDBK-5J, Figure 3.7.6.1.2(b))

Temperature Correction Factor (For Fbru) $cb := .92$

(Ref. MIL-HDBK-5J, Figure 3.7.6.1.3(a))

Loads model 2-06 was run in NASTRAN for 192 load cases. Beam element forces were recovered, and given in the data file "keeltubetokeelblock.dat" for elements 1307 and 1308.

$data := READPRN(\text{"keeltubetokeelblock.dat"})$ $ORIGIN := 1$ $i := 1 .. rows(data)$

Loads from Beam End A:

Axial Load	$Fxa_i := data_{i,7} \cdot lbf$
Shear in Y axis	$Fya_i := data_{i,5} \cdot lbf$
Shear in Z axis	$Fza_i := data_{i,6} \cdot lbf$
Torsion	$Mxa_i := data_{i,8} \cdot in \cdot lbf$
Moment about Y axis	$Mya_i := -data_{i,4} \cdot in \cdot lbf$
Moment about Z axis	$Mza_i := data_{i,3} \cdot in \cdot lbf$

Loads from Beam End B:

Axial Load	$Fxb_i := data_{i,13} \cdot lbf$
Shear in Y axis	$Fyb_i := data_{i,11} \cdot lbf$
Shear in Z axis	$Fzb_i := data_{i,12} \cdot lbf$
Torsion	$Mxb_i := data_{i,14} \cdot in \cdot lbf$
Moment about Y axis	$Myb_i := -data_{i,10} \cdot in \cdot lbf$
Moment about Z axis	$Mzb_i := data_{i,9} \cdot in \cdot lbf$

$ID_i := data_{i,1}$ $LC_i := data_{i,2}$

Beam Section Properties:

Thickness of tube	$t := 0.25 \cdot in$	(Ref. SDG39135771)
Width of tube	$a := 4.0 \cdot in$	(Ref. SDG39135771)
Depth of tube	$b := 4.0 \cdot in$	(Ref. SDG39135771)
Enclosed area of mean width and mean height	$Am := (a - t) \cdot (b - t)$	$Am = 14.06 \cdot in^2$

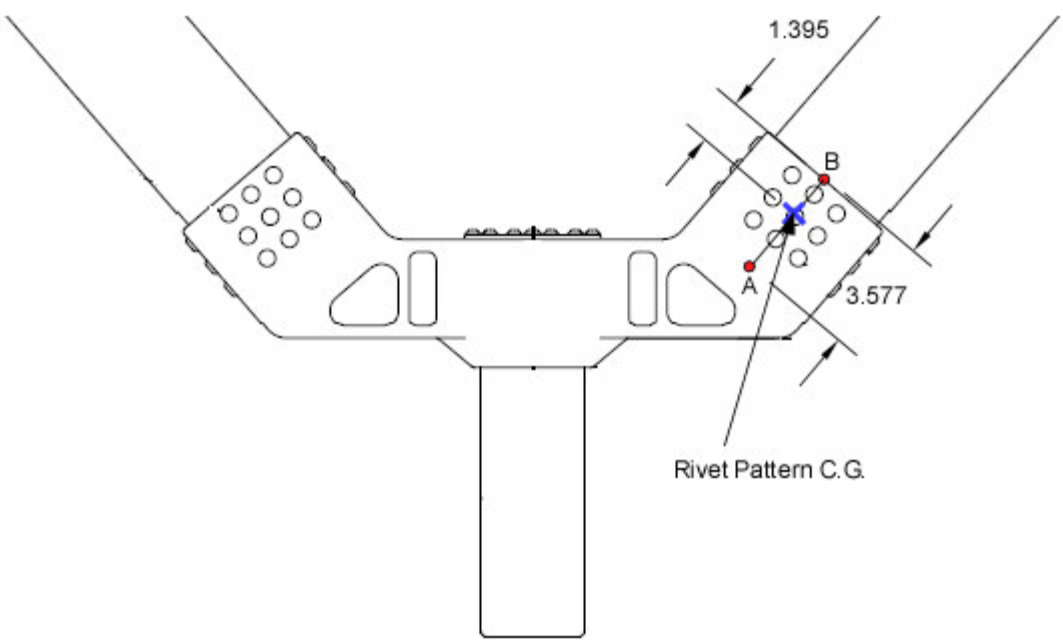

Figure 2.5.3.2-1 Rivet Pattern Dimensions for Beam Element Ends A and B.

Note: Figure is for reference only.

Bending Moment at Center of Rivet Pattern:

NASTRAN gives beam moments at ends A and B of the beam element. The center of gravity of the rivet pattern falls between nodes A and B; therefore, the moment at the center of the rivet pattern needs to be interpolated.

Distance from end A to the center of the rivet pattern $c := (3.577 - 1.395)\cdot in$

Total length of beam element $d := 3.577\cdot in$

(See Figure 2.5.3.2-1 and Ref. Appendix C4)

Moment My:

Difference $Mydiff_i := \left(Mya_i - Myb_i\right)$

Linearly interpolate at centroid of rivets

$$My1 := \frac{c}{d}\cdot Mydiff \qquad My2 := \frac{d-c}{d}\cdot Mydiff$$

Moment My interpolated at centroid of rivets

$$My := Myb + My2$$

Moment Mz:

Difference $Mzdiff_i := \left(Mza_i - Mzb_i\right)$

Linearly interpolate at centroid of rivets

$$Mz1 := \frac{c}{d}\cdot Mzdiff \qquad Mz2 := \frac{d-c}{d}\cdot Mzdiff$$

Moment Mz interpolated at centroid of rivets

$$Mz := Mzb + Mz2$$

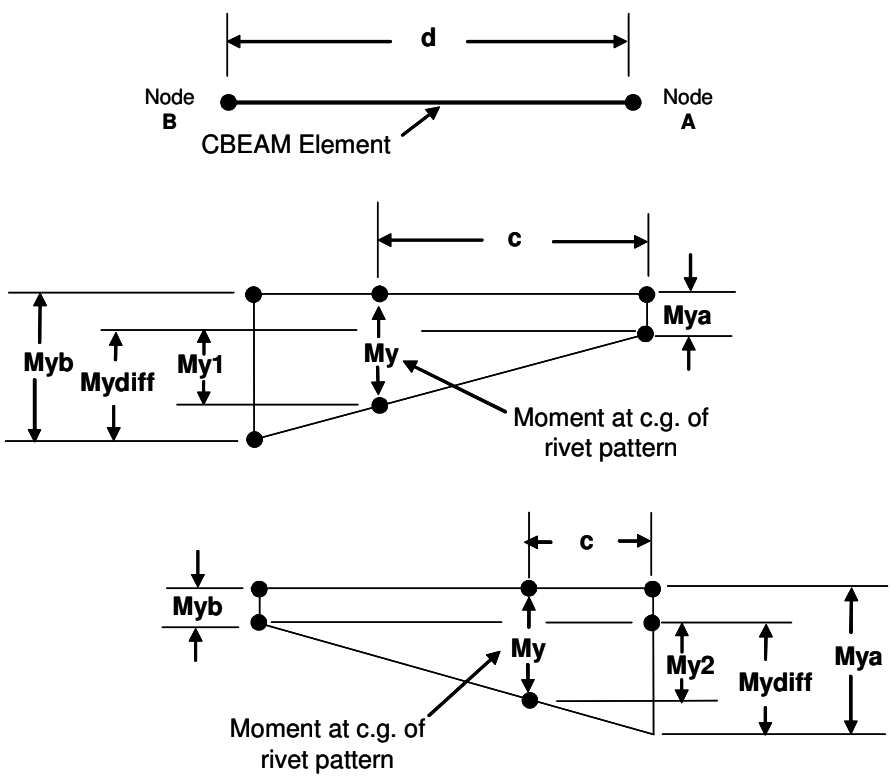

Free Body Diagram for Moment Distribution for My Interpolation
(Note: Similar moment distribution is used for Mz interpolation.)

Load in Rivets at Keel Tube to Keel Block:

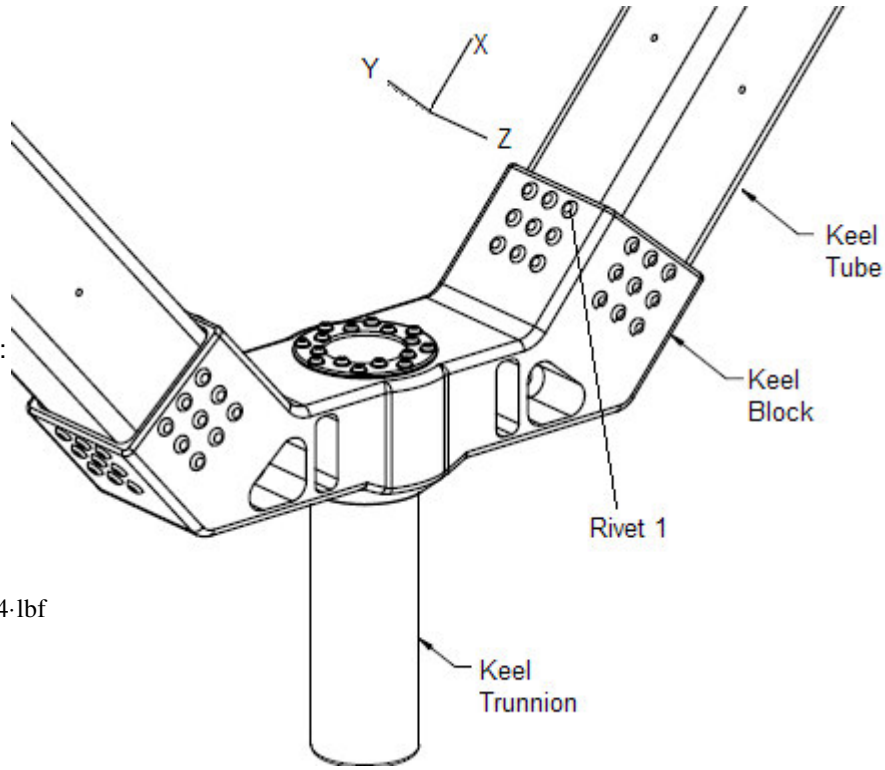

Total Number of rivets at beam end:

$Nsps := 36$

Number of rivets reacting Fz shear load:

$psz := 18$

Number of rivets reacting Fy shear loads:

$psy := 18$

Shear load/rivet due to Fy

$$Fsry := \frac{Fya}{psy} \qquad \max(Fsry) = 24.4 \cdot lbf$$

Shear load/rivet due to Fz

$$Fsrz := \frac{Fza}{psz} \qquad \max(Fsrz) = 33.9 \cdot lbf$$

Note: The Fya and Fza forces have the same magnitude as the Fyb and Fzb forces. The end A forces are used above.

Shear flow due to torsion
(Ref. Bruhn section A6.8)

$$Fsrt := \frac{Mxa}{2 \cdot Am} \qquad \max(Fsrt) = 93 \cdot \frac{lbf}{in}$$

Note: The shear load (Fsrt) is used to calculate the torsional load (Psrt) in the rivet due to the pitch on the rivet pattern. See Figure 2.5.3.2-2.

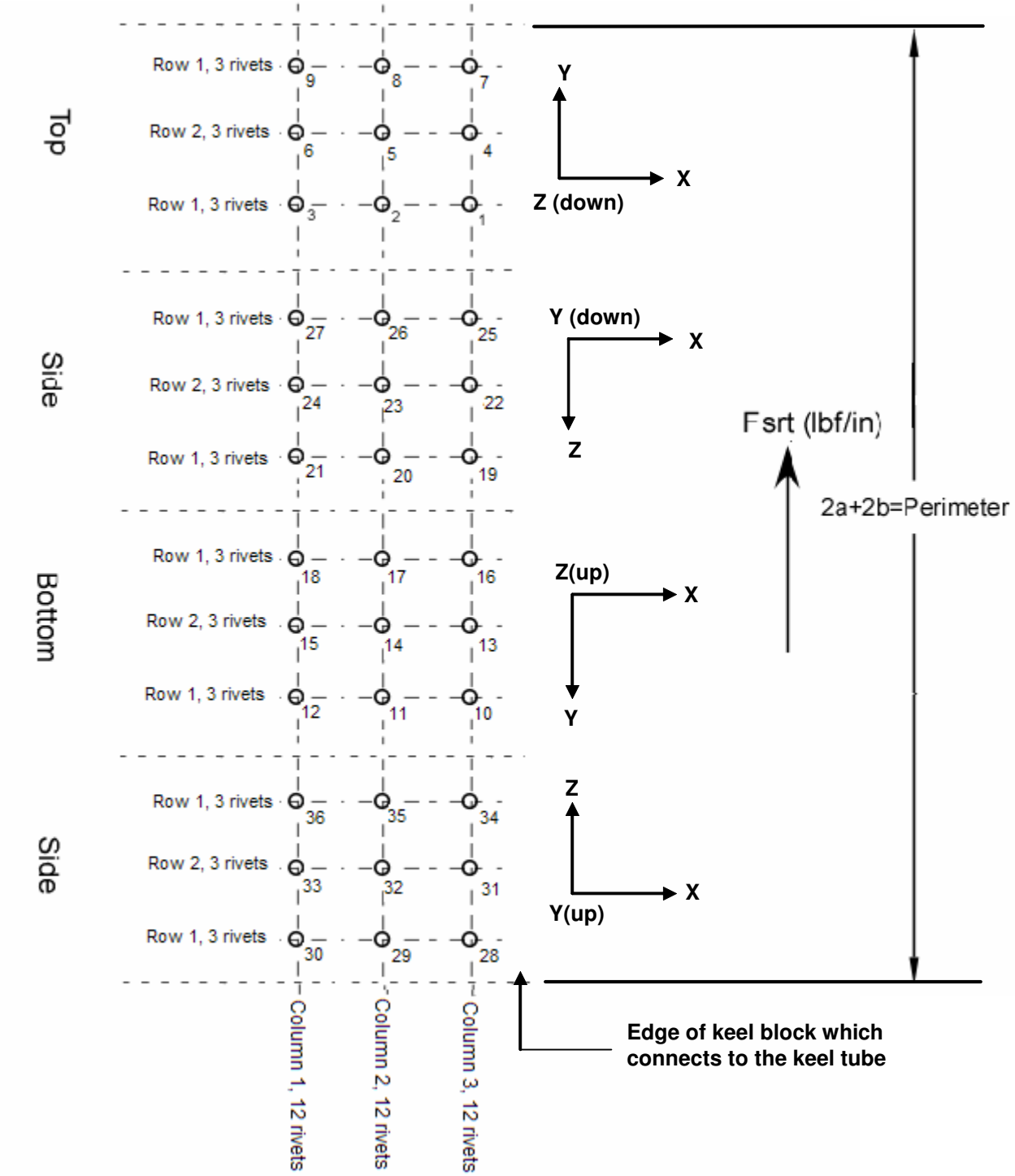

Figure 2.5.3.2-2 Layout of Rivet Patterns used to Calculate Rivet Pitch for Torsional Load

Calculation of Rivet Pitch: (All rivets share the torsion load equally)

Perimeter of rivet pattern $per := 2 \cdot a + 2 \cdot b$ $per = 16 \cdot in$

Loads in rivet due to torsion $Psrt := Fsrt \cdot \frac{per}{Nsps}$ $\max(Psrt) = 41.3 \cdot lbf$

Shear load in rivets due to beam axial load $Prta := \frac{Fxa}{Nsps}$ $\max(Prta) = 523.5 \cdot lbf$

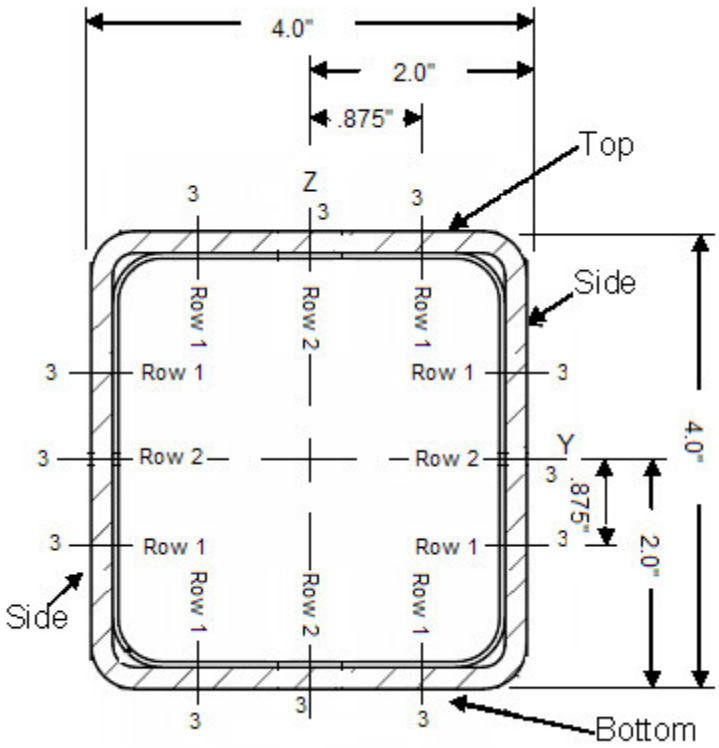

Note: Figure is for reference only.

Rivet Dimension Variables:
(Ref. SDG39135735 and SDG39135734)

$z1 := .875 \cdot in$

$z2 := 2.0 \cdot in$

$y1 := .875 \cdot in$

$y2 := 2.0 \cdot in$

Eccentrically Loaded Rivets due to My and Mz Moments:

Rivet Coordinate System Data

$j := 1 .. rows(coord)$ Counter for Coordinate Points

$x_j := coord_{j,2}$ Rivet Coordinate Points for x-direction

$rivet_counter_j := \frac{coord_{j,1}}{in}$

$y_j := coord_{j,3}$ Rivet Coordinate Points for y-direction

$z_j := coord_{j,4}$ Rivet Coordinate Points for z-direction

For Moment My:

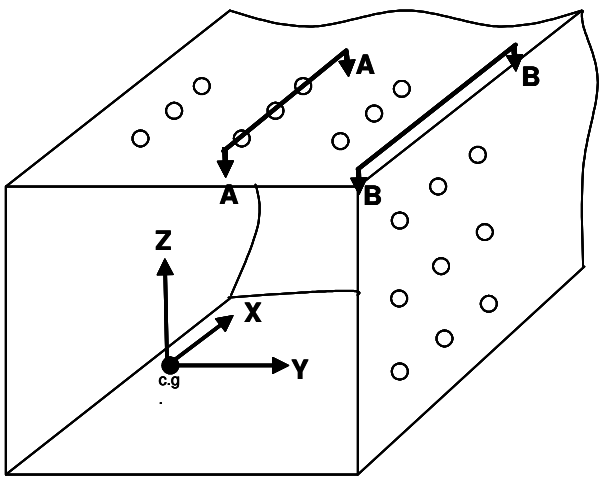

Eccentrically Loaded Rivet Pattern about My

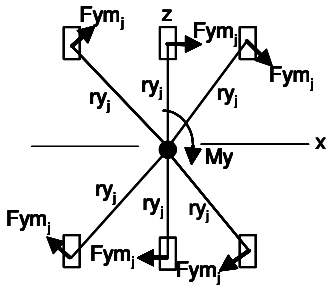

Cross-Section A-A

(Rows 1&2, 18 rivets)

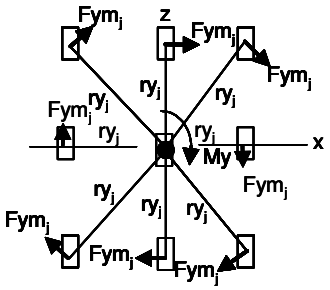

Cross-Section B-B

(Represents both sides, 18 rivets)

Note: Figure is for reference only.

$$ry_j := \left[\left(x_j\right)^2 + \left(z_j\right)^2\right]^{\frac{1}{2}}$$

Radial distance to each rivet from the centroid of the rivet pattern

$$sigry := \sum_{j=1}^{rows(coord)} \left(ry_j\right)^2$$

Sum of the radial directions for all rivets in the rivet pattern

$$\beta y_j := \begin{cases} 0 & \text{if } \left(x_j = 0\right)\cdot\left(z_j = 0\right) \\ atan2\left(x_j, z_j\right) & \text{otherwise} \end{cases}$$

Angle between resultant vector and tension or shear vectors

(Note: The angle θ is defined off of the x-axis.
See below.)

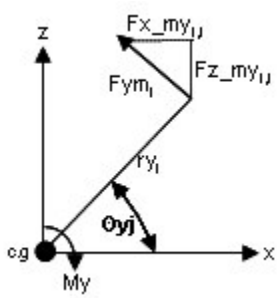

$My_{1,1} = -1362.7 \cdot in \cdot lbf$

$x_{18} = -0.9 \cdot in$ $\quad y_{18} = -0.9 \cdot in$ $\quad z_{18} = 2 \cdot in$

$$Fym_{i,j} := \frac{My_i \cdot ry_j}{sigry}$$

Resultant Load at Each Rivet

$$Fz_my_{i,j} := Fym_{i,j} \cdot \sin\left(\frac{u}{2} - \beta y_j\right)$$

z - component of Fym

$Fz_my_{1,10} = -12 \cdot lbf$

$$Fx_my_{i,j} := Fym_{i,j} \cdot -\cos\left(\frac{u}{2} - \beta y_j\right)$$

x - component of Fym

$Fx_my_{1,10} = 27.4 \cdot lbf$

For Moment Mz:

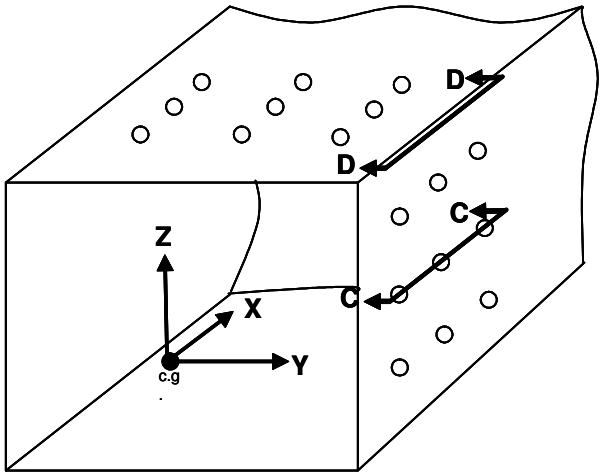

Eccentrically Loaded Rivet Pattern about Mz

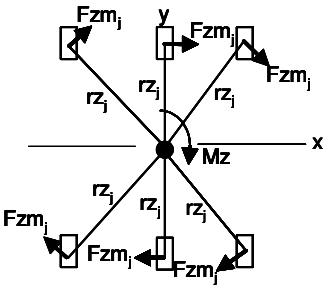

Cross-Section C-C

(Rows 1&2, 18 rivets)

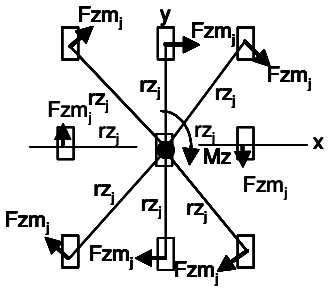

Cross-Section D-D

(Represents both sides, 18 rivets)

Note: Figure is for reference only.

$$rz_j := \left[\left(x_j\right)^2 + \left(y_j\right)^2\right]^{\frac{1}{2}}$$

Radial distance to each rivet from the centroid of the rivet pattern

$$sigrz := \sum_{j=1}^{rows(coord)} \left(rz_j\right)^2$$

Sum of the radial directions for all rivets in the rivet pattern

$$\beta z_j := \begin{cases} 0 & \text{if } \left(x_j = 0\right)\cdot\left(y_j = 0\right) \\ atan2\left(x_j, y_j\right) & \text{otherwise} \end{cases}$$

Angle between resultant vector and tension or shear vectors

$$Fzm_{i,j} := \frac{(-Mz)_i \cdot rz_j}{sigrz}$$

Resultant Load at Each Rivet

(Note: The angle θ is defined off of the x-axis.
See below.)

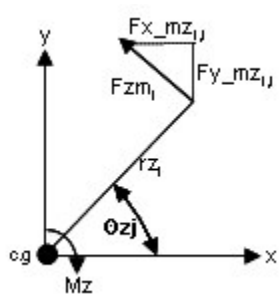

$$Mz_{1,1} = 1921.5 \cdot in \cdot lbf$$

$$Fy_mz_{i,j} := Fzm_{i,j} \cdot \sin\left(\frac{u}{2} - \beta z_j\right)$$

y - component of Fzm

$$Fy_mz_{1,9} = 16.9 \cdot lbf$$

$$Fx_mz_{i,j} := Fzm_{i,j} \cdot -\cos\left(\frac{u}{2} - \beta z_j\right)$$

x - component of Fzm

$$Fx_mz_{1,9} = 16.9 \cdot lbf$$

$$F_{i,j} := \begin{cases} Fz_my_{i,j} & \text{if } rivet_counter_j \le 18 \\ Fy_mz_{i,j} & \text{otherwise} \end{cases}$$

Total Axial Load due to My and Mz Moments

$$\max\left(\overrightarrow{|F|}\right) = 54.7 \cdot lbf$$

Note: The axial loading is reacted by the beam and socket and not taken by the rivet. See section 2.1.8 for beam and socket analysis.

Total Rivet Shear Load:

$$Pt_{i,j} := \begin{cases} \sqrt{\left(Prta_i + Fx_my_{i,j} + Fx_mz_{i,j}\right)^2 + \left(Psrt_i + Fsry_i + Fy_mz_{i,j}\right)^2} & \text{if } j \le 18 \\ \sqrt{\left(Prta_i + Fx_my_{i,j} + Fx_mz_{i,j}\right)^2 + \left(Psrt_i + Fsrz_i + Fz_my_{i,j}\right)^2} & \text{otherwise} \end{cases}$$

$\max(Pt) = 633.4 \cdot lbf$

Margin of safety for Total Rivet Load:

$Pt_{39.,34} = 633.4 \cdot lbf$

$$MS1t := \frac{Fs \cdot cf}{Pt \cdot FSu \cdot FF} - 1$$

$\min(MS1t) = 0.893$

(Note: Fitting Factor (FF) included for misalignment, different shim thicknesses, etc. ...)

The following will output an array for each row of rivets with element identity, load case, load, and margin of safety from left to right.

$output := augment(ID, LC, MS1t)$

$rows(output) = 384$ Number of rows in the "output" array

$cols(output) = 38$ Number of columns in the "output" array

The "output" array is then searched for the location of the minimum margin. The match function is used to locate the minimum margin of safety and the element identity, load case, rivet location, and maximum load are pulled from the array.

$$match(\min(MS1t), MS1t) = \begin{bmatrix} 39 \\ 34 \end{bmatrix}$$

$min_LC := output_{39,2}$ Load Case for Minimum Margin of Safety

$min_ID := output_{39,1}$ Element ID for Minimum Margin of Safety

Rivet number 34 is the rivet with the minimum margin of safety of 0.893.

Minimum Margin of Safety:

Minimum Margin of Safety	$\min(MS1t) = 0.893$
Element ID for Minimum Margin of Safety	$min_ID = 1307$
Load Case for Minimum Margin of Safety	$min_LC = 1020$
Maximum Rivet Load for Minimum Margin of Safety	$\max(Pt) = 633.4 \cdot lbf$
Rivets with Minimum Margin of Safety	Rivet number 34 (See figure 2.5.3.2-2 for rivet location)

Bearing on Hole Wall:

Hole diameter $dh := 0.257 \cdot in$ (Ref. SEG39135726, Flag Note 2)

Tube thickness $tp := 0.25 \cdot in$ (Ref. SDG39135771)

Bearing area $Ab := dh \cdot tp$ $Ab = 0.06425 \cdot in^2$

Max. load per rivet $max(Pt) = 633.4 \cdot lbf$

Max. bearing stress $b := \frac{max(Pt)}{Ab}$ $b = 9858 \cdot psi$

Margin of safety $MSb := \frac{Fbru \cdot cb}{b \cdot FSu \cdot FF} - 1$ $MSb = 5.9$

Shear tear out:

Edge distance $e := 0.520 \cdot in$ (Ref. SDG39135770)

Note: Using this e is conservative, since actual rivet force is in general at some angle.

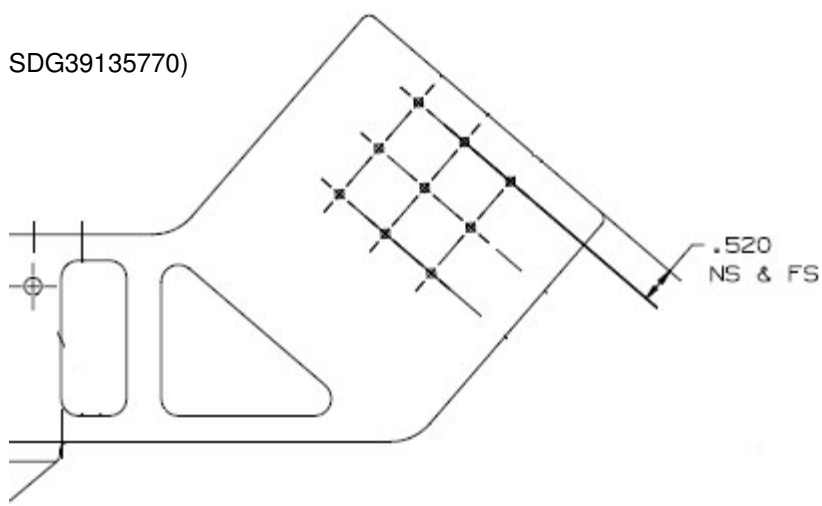

Hole diameter $dh := 0.257 \cdot in$

E over D ratio $\frac{e}{dh} = 2.023$

Tube thickness $tp := 0.25 \cdot in$

Shear out area $As := 2 \cdot \left(e - \frac{dh}{2} \cdot \cos(40 \cdot deg) \right) \cdot tp$ $As = 0.2108 \cdot in^2$

Max. load per rivet $max(Pt) = 633.4 \cdot lbf$

Max. shear tear out stress $=s := \frac{max(Pt)}{As}$ $=s = 3004.9 \cdot psi$

Margin of safety $MSsh := \frac{Fsu \cdot cd}{=s \cdot FSu \cdot FF} - 1$ $MSsh = 6.162$

3.0 Strength and Stability Assessment of Vacuum Case Assembly

3.1 Upper and Lower Conical Flange Assembly

3.1.1 Conical Flange Assembly Strength Assessment

The Stress Analysis of the Conical Flanges

1. Introduction of the Conical Flanges

Figure 3.1.1-1 shows the Conical Flanges. The section view of the assembly in Figure 3.1.1-2 shows how the Conical flanges are assembled within the Vacuum Case System.

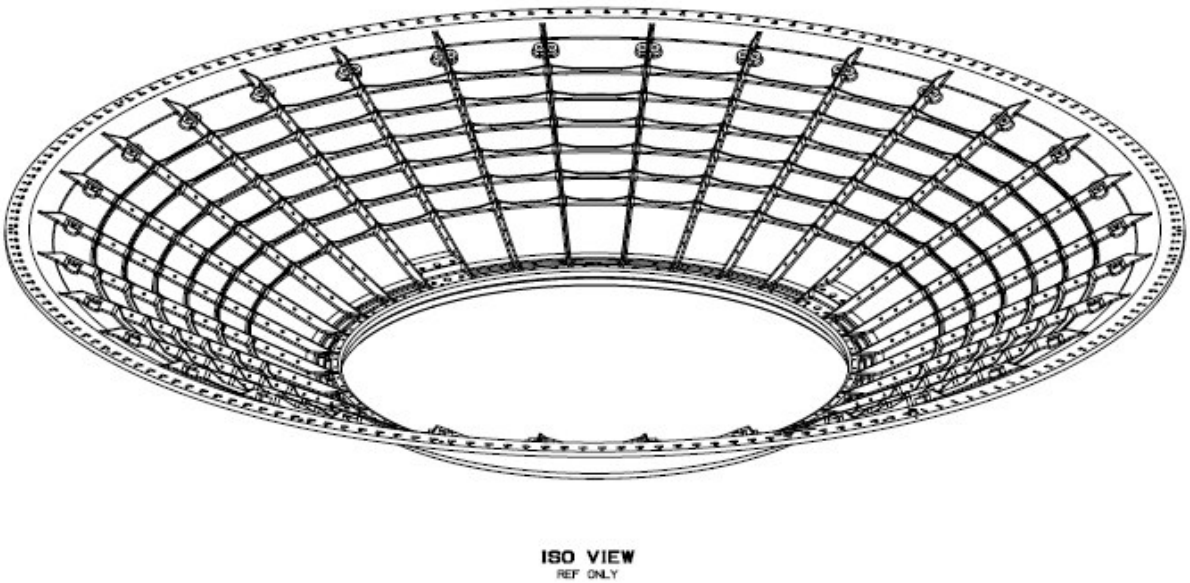

Figure 3.1.1-1: Conical Flange

Prepared By	Name	Date	Engineering and Science Contract Group	File Name
	Saike Wang	01/03/03		Flanges.doc
Checked By	C. Bala	01/14/03	*Structural Analysis Section*	Drawing No. SEG39135778
Title	**Conical Flanges - AMS-02**			

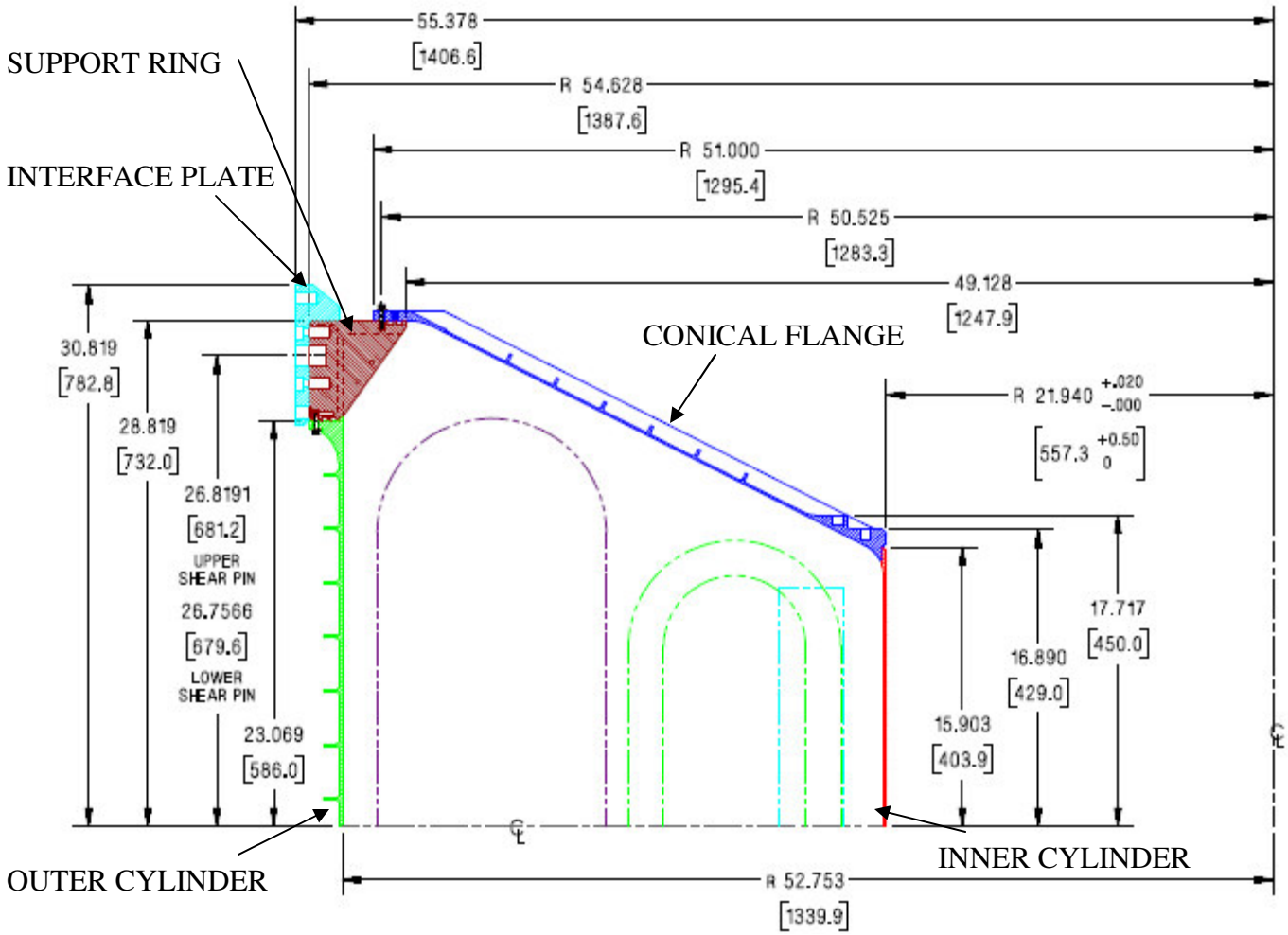

Figure 3.1.1-2: Conical Flange Assembly in Vacuum Case

The design of the Flange Skin is 0.095 inch thick. The Radial Ribs are 0.983 inch high with the thickness of 0.14 inch. The Circumferential Ribs are 0.491 inch high with the thickness of 0.135 inch. Some of the details show in Figure 3.1.1-3.

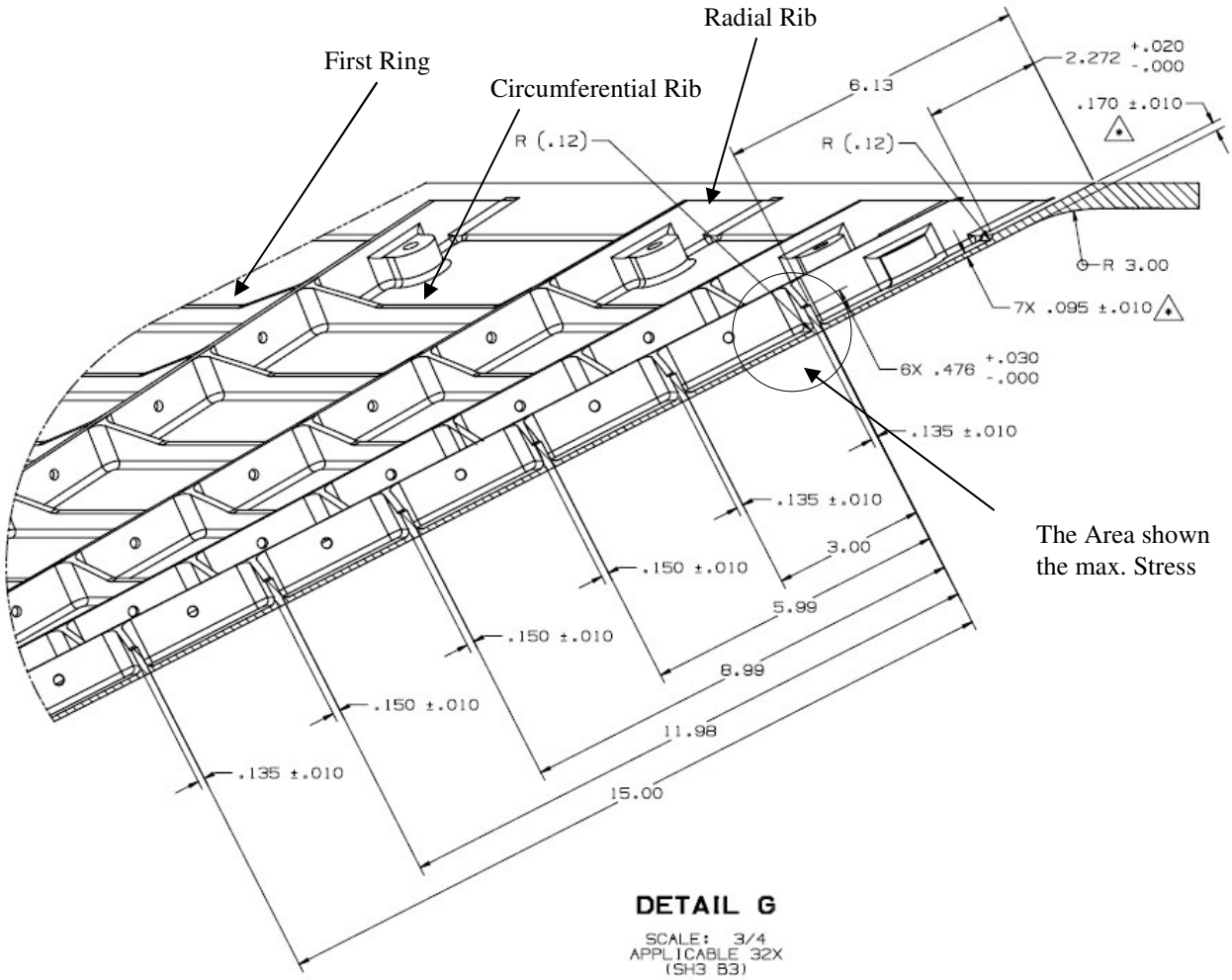

Figure 3.1.1-3: Some Details of Conical Flange

2. The Method Used to Perform the Stress Analysis of the Conical Flanges

The FEA math models of the Flanges were made using FEMAP software. The FEA models of the Flanges consist of the CQUAD4, CTRIA3, and also RBE's of SPC/MPC. Then, the models of the Flanges were connected to the whole FEA model of AMS02 by RBE2s. The solutions of the Flange FEA math models are obtained from running the NASTRAN model. The modifications, design changes, and engineering judgments were made based on these solutions. The NASTRAN was run several times when a final solution was reached.

3. The information of the Flange FEA models and assumptions

When the NASTRAN was run for the Flange FEA models, the assumptions were made that the rest of the FEA math models are correct; the connections, which put the Flange math models on the Support Rings and Inner Cylinder are correct; all the boundary conditions including the constrains and loading cases are correct. In other words, the stress analysis of the Conical Flanges only focuses on the Flange FEA math model itself.

Figures 3.1.1-4 and 3.1.1-5 show how the Flange math models are within the Vacuum Case FEA models. Figure 3.1.1-6 shows the FEA models of the Conical Flanges by hiding the math models of the Outer Cylinder, Inner Cylinder, and Support Rings.

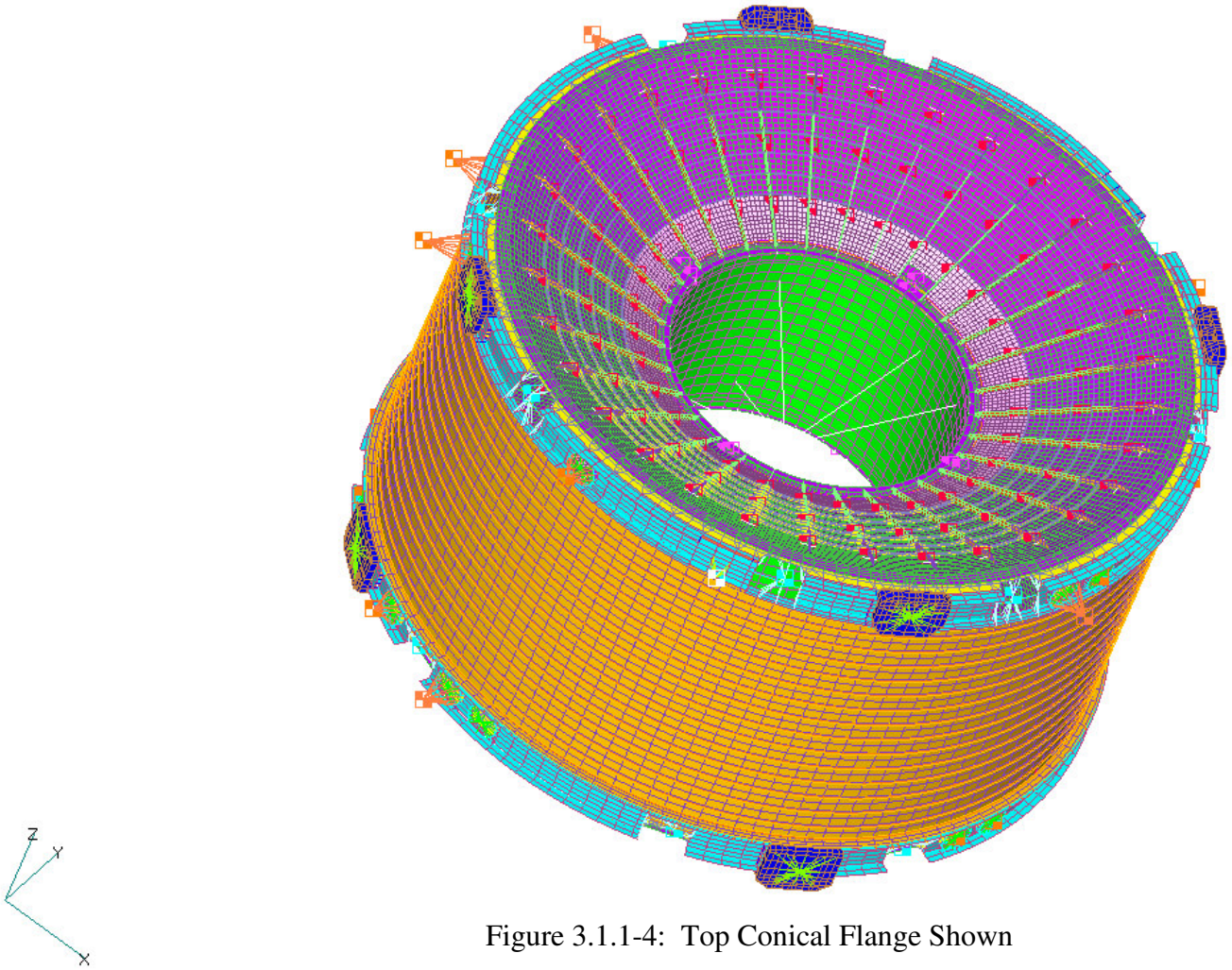

Figure 3.1.1-4: Top Conical Flange Shown

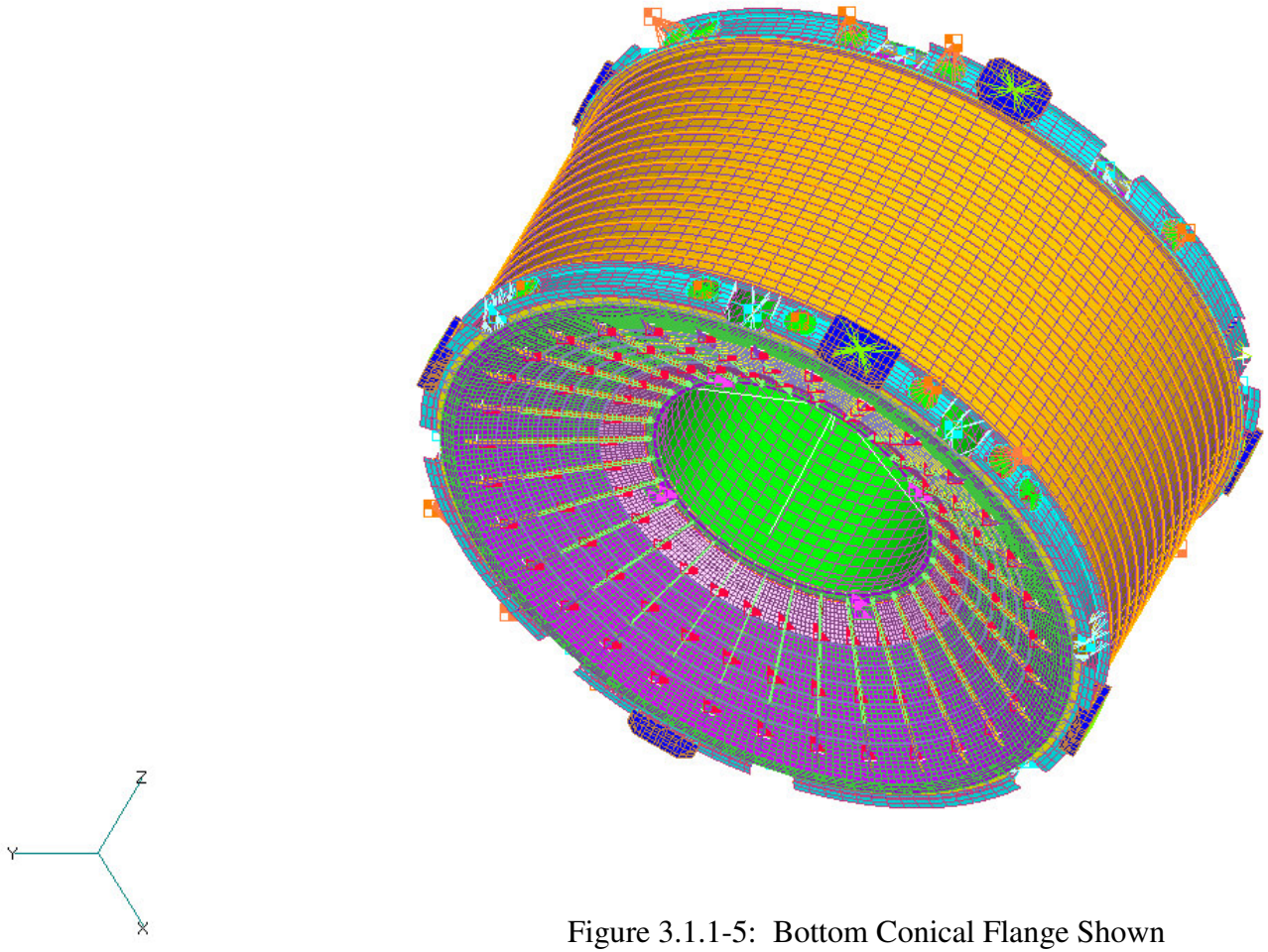

Figure 3.1.1-5: Bottom Conical Flange Shown

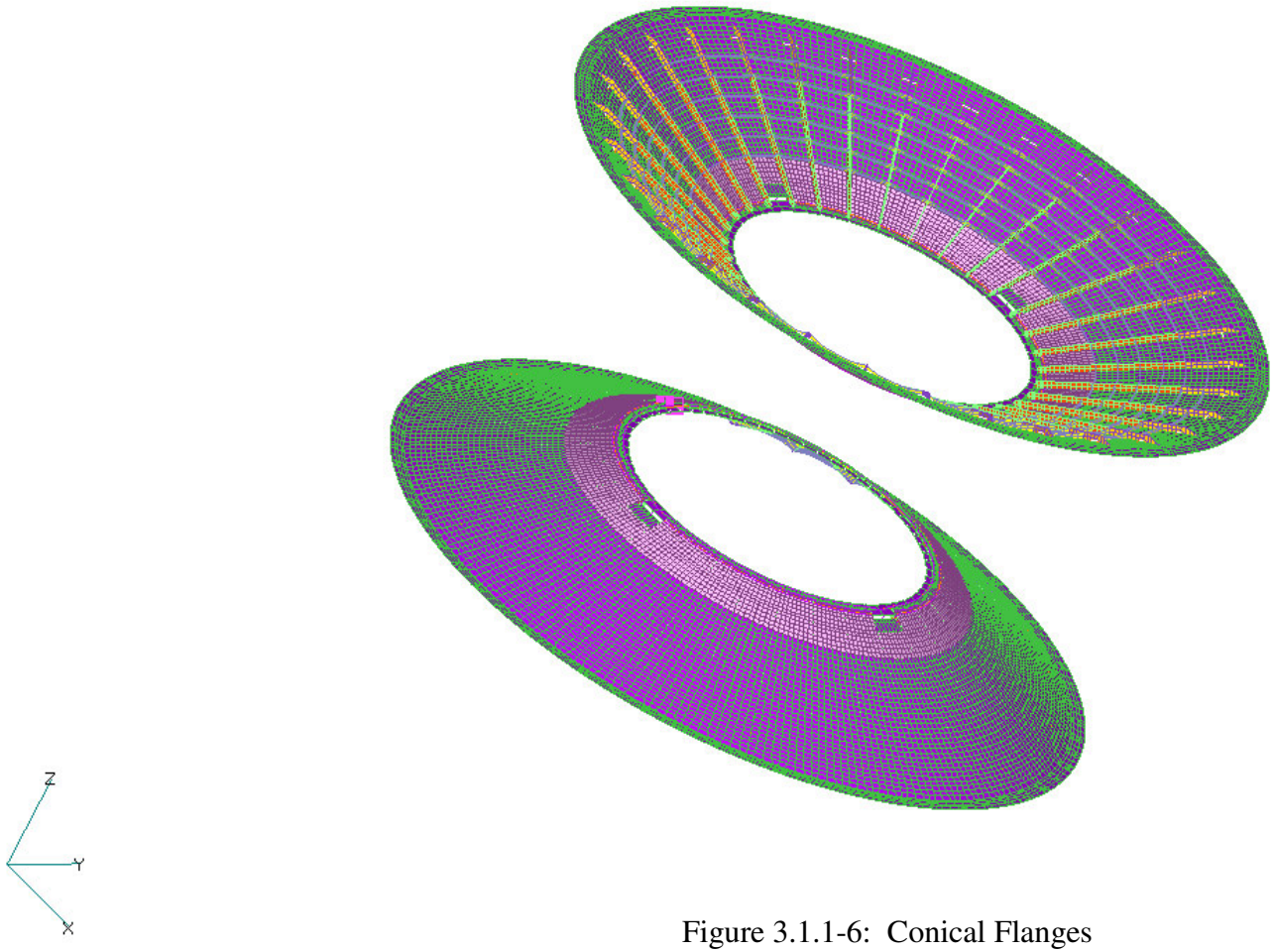

Figure 3.1.1-6: Conical Flanges

The NASTRAN data file of the Conical Flanges is put under the directory: /hsm/bsommer/ams/bulk/3-01, and named as "vc-hifi.dat" on May 7, 2001.

The results of the Flange model check for the KGG, KNN, KAA and Six Rigid Body Modes are listed below. The math model has nothing to do with the A-set reduction. Therefore, the KNN shall be same as the KAA. The results give confidence that the flange model is correct because the underlined translation values of each matrix are less than E-05, and the underlined rotation values of each matrix are less than E-03. The first six modes are very close to zero and transition modes are well separated. The more details of the output for the model check of the flanges are attached in Appendix A4. The output file of NASTRAN for the flange model check is put under the directory: /hsm/bsommer/ams/checks/3-01, and named as "checkamsflanges.f06" on May 7, 2001.

MATRIX CHECK KGG - 6 X 6 SQUARE MATRIX

-8.4800D-07	5.6607D-08	-2.4359D-08	-5.6598D-06	-7.7791D-06	-5.0772D-06
-8.7993D-08	**-2.1127D-08**	6.0552D-08	1.7569D-05	-1.6976D-07	-3.5314D-05
-9.6800D-09	1.2030D-08	**4.6775D-07**	-1.0982D-05	-1.7730D-05	7.1068D-06
-4.0676D-07	1.3530D-05	-1.5092D-05	**-4.6816D-04**	9.8786D-04	-9.4268D-05
-1.5214D-05	-4.6048D-06	-8.5047D-07	1.8870D-04	**-7.0571D-04**	1.1854D-04
-2.5233D-05	-3.5430D-05	8.8610D-06	-5.5004D-05	-4.4023D-04	**-5.2839D-03**

MATRIX CHECK KNN - 6 X 6 SQUARE MATRIX.

-8.2943D-07	-1.2442D-07	4.4710D-08	1.6216D-05	-3.5647D-05	4.4811D-05
6.7537D-07	**2.3723D-07**	6.8612D-09	2.5061D-05	-8.0928D-06	-1.4793D-05
-3.5929D-09	-1.6223D-08	**2.1329D-08**	-1.0320D-05	-1.9622D-05	1.1193D-05
-9.7322D-06	3.4268D-05	-2.1670D-06	**-8.0765D-05**	-2.5649D-03	-7.2146D-04
-2.7887D-05	-1.6477D-05	-1.8767D-05	3.1161D-03	**-2.4291D-03**	-2.4835D-04
7.9334D-06	-2.6788D-05	8.5138D-06	-8.3960D-04	-5.5407D-04	**-3.5242D-03**

MATRIX CHECK KAA - 6 X 6 SQUARE MATRIX.

-8.2943D-07	-1.2442D-07	4.4710D-08	1.6216D-05	-3.5647D-05	4.4811D-05
6.7537D-07	**2.3723D-07**	6.8612D-09	2.5061D-05	-8.0928D-06	-1.4793D-05
-3.5929D-09	-1.6223D-08	**2.1329D-08**	-1.0320D-05	-1.9622D-05	1.1193D-05
-9.7322D-06	3.4268D-05	-2.1670D-06	**-8.0765D-05**	-2.5649D-03	-7.2146D-04
-2.7887D-05	-1.6477D-05	-1.8767D-05	3.1161D-03	**-2.4291D-03**	-2.4835D-04
7.9334D-06	-2.6788D-05	8.5138D-06	-8.3960D-04	-5.5407D-04	**-3.5242D-03**

E I G E N V A L U E A N A L Y S I S S U M M A R Y (READ MODULE)

MODE NO.	EXTRA. ORDER	EIGENVALUE	RADIANS	CYCLES	GENERALIZED MASS	GENERALIZED STIFFNESS
1	1	7.346718E-08	2.710483E-04	4.313868E-05	1.000000E+00	7.346718E-08
2	2	1.741550E-07	4.173189E-04	6.641836E-05	1.000000E+00	1.741550E-07
3	3	2.010880E-07	4.484284E-04	7.136959E-05	1.000000E+00	2.010880E-07
4	4	2.410430E-07	4.909613E-04	7.813892E-05	1.000000E+00	2.410430E-07
5	5	3.412148E-07	5.841359E-04	9.296812E-05	1.000000E+00	3.412148E-07
6	6	3.685538E-07	6.070863E-04	**9.662079E-05**	1.000000E+00	3.685538E-07
7	7	7.302433E+02	2.702301E+01	**4.300846E+00**	1.000000E+00	7.302433E+02

WEIGHT SUMMARY

DIRECTION	MASS	X-C.G.	Y-C.G.	Z-C.G.
X	3.677921E+01	-4.980716E-17	3.396014E-02	-3.702117E-02
Y	3.679269E+01	2.039517E-04	4.677141E-17	-3.471487E-02
Z	3.677921E+01	1.410616E-04	3.396527E-02	-7.414474E-17

I(S)

9.223871E+04	-2.808297E+02	2.212755E+02
-2.808297E+02	6.513497E+04	8.145423E+02
2.212755E+02	8.145423E+02	8.321372E+04

I(Q)

6.509564E+04		
	8.324427E+04	
		9.224748E+04

Q

9.972480E-03	-2.595862E-02	9.996133E-01
-9.989467E-01	4.451689E-02	1.112187E-02
-4.478838E-02	-9.986713E-01	-2.548733E-02

Total weight = 386.0886 x Mass = 14200 lbf
The actual hardware is 14187 lbf (ref. VC 3-01)

4. The Loads and Constrains.

The VC FEA assembly math model is connected with the USS-02 FEA math models. The entire AMS02 FEA math model is constrained at the five Trunion locations.

A number of load cases under the launch and landing conditions were investigated in order to identify the worst load cases. Based on these investigation, the worst ones were Load Cases R1016, R1032 and R2016 under the landing cold condition.

The Load Factors for R1016, R1032 and R2016 are listed below. The Load Factors are applied at the C.G. of the entire AMS02 math model when we run NASTRAN. The Load Factors are taken from Table 4.1 of Page 16 in AMS02 Structural Verification Plan for STS and ISS (JSC-28792, Rev.B). The data files of NASTRAN for these load cases are put under directory:

/hsm/swang/ams02/nonlin/flange-new/1000, and named as "R1016.dat" on June 5, 2002.
/hsm/swang/ams02/nonlin/flange-new/1000, and named as "R1032.dat" on June 5, 2002.
/hsm/swang/ams02/nonlin/flange-new/2000, and named as "R2024.dat" on June 5, 2002.

Load Case	Event	Nx	Ny	Nz	Rx	Ry	Rz
R1016	Liftoff	5.7	1.6	-5.9	-10.0	-25.0	-18.0
R1032	Liftoff	5.7	-1.6	-5.9	-10.0	-25.0	-18.0
R2016	Landing	4.5	2.0	-6.5	-20.0	-35.0	-15.0

5. The results

The maximum stresses of the elements for each of the Load Cases R1016, 1032 and 2016 are listed below. The NASPOST was used to sort out these information from the f06 and pch data files of the three load cases. A part of the sorted data for the three cases is attached in Appendix A4. The f06 data files of NASTRAN for these load cases are put under directory:

/hsm/swang/ams02/nonlin/flange-new/1000/6-02, and named as "R2053.pch" on June 8, 2002.
/hsm/swang/ams02/nonlin/flange-new/1000/6-02, and named as "R2020.pch" on June 8, 2002.
/hsm/swang/ams02/nonlin/flange-new/2000/6-02, and named as "R2016.pch" on June 8, 2002.

The sorted file of NASPOST from these pch files are put under same directories above.

Load Case	Elem. ID	Elem. Type	MAX-MAX PRIN(KSI)	MAX-VONM STRESS (KSI)	MAX-MAX-SHR STRESS (KSI)
R1016	218235	Quad4-plate	28.080	27.853	14.040
R1032	212434	Quad4-plate	6.956	27.469	15.139
R1032	213623	Quad4-plate	-28.711	27.740	14.355
R2016	218197	Quad4-plate	27.52	27.258	13.379

The maximum stress on the Conical Flanges is located at the intersection of the first ring and a radial rib. The details of the geometric area with this stress level are shown in Figure 3.1.1-7.

$\sigma t := 28711 \cdot psi$ (max. tensile) App. A4-23

$\sigma y := 27853 psi$ (max. yield) App. A4-11

$\tau s := 15139 psi$ (max. shear) App. A4-22

Note: *The Von Mises stress distribution for each of the load cases R1016, R1032 and R2016 is attached from Appendix A4. The worst stresses 43.02KSI and 35.28 KSI on Page A4-15, 42.78 KSI, 34.98 KSI on Page A4-24, 42.53 KSI and 34.86 KSI on Page A4-33 are located at the top tips of the radial ribs,, which are artificially high due to the sharp corner of the tips. Therefore, they will not be used to perform the stress analysis for the Conical Flanges.*

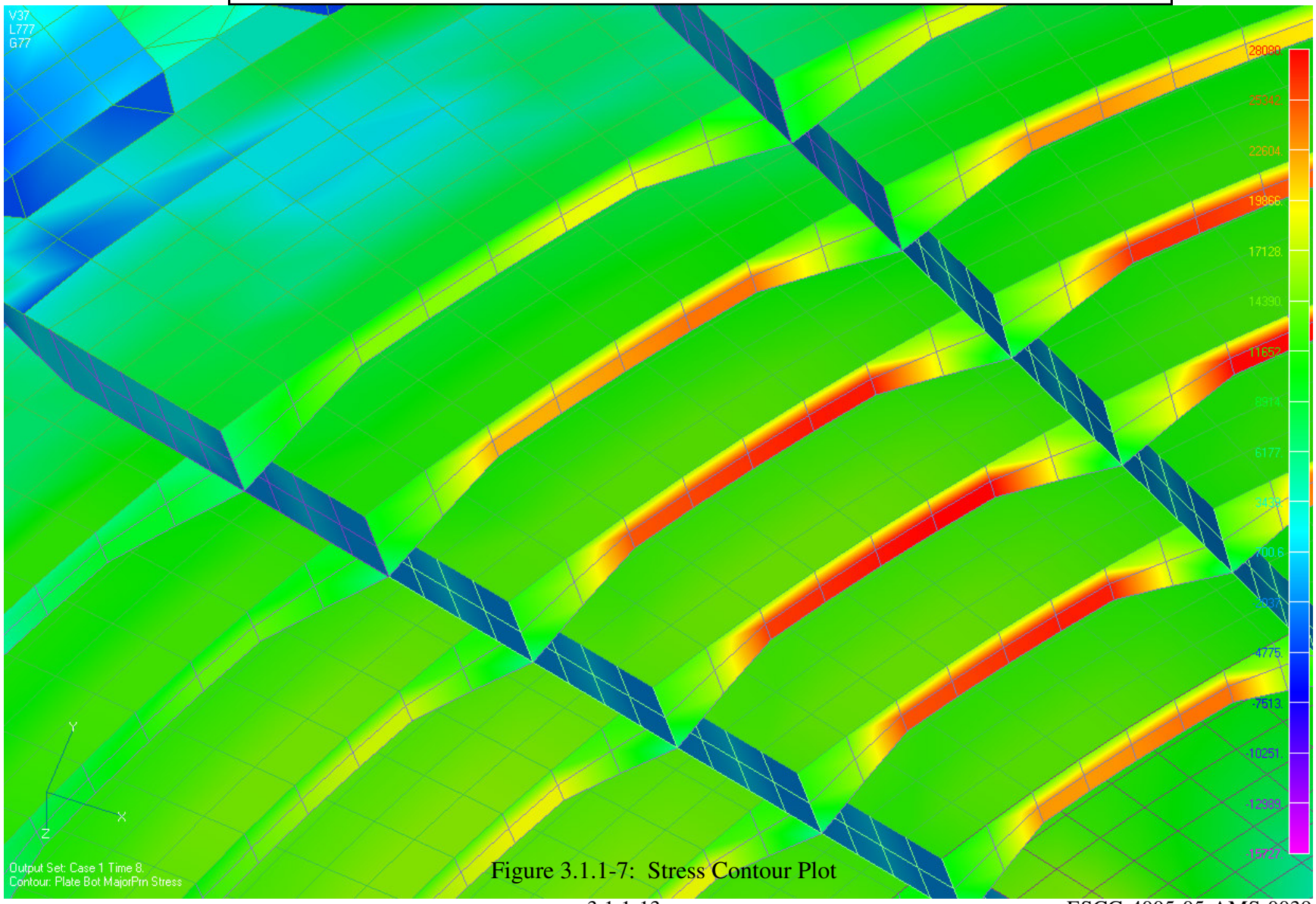

Figure 3.1.1-7: Stress Contour Plot

6. The stress analysis

Conical Flanges, 2219-T62 Al. Aly. (AMS-QQ-A-250/30)

$Ftu := 54000\,psi$	ultimate tensile strength	$FSy := 1.1$	yield Factor of Safety
$Fty := 36000\,psi$	tensile yield strength	$FSu := 1.4$	ultimate Factor of Safety
$Fsu := 31000\,psi$	shear strength		
$\eta ult := 0.97$	(ultimate thermal factor at 140 F)		
$\eta yld := 0.97$	(yield thermal factor at 140 F)		

Margins of Safety

Ultimate $MSu := \frac{\eta ult \cdot Ftu}{\sigma t \cdot FSu} - 1$ $MSu = 0.303$ #

Yield $MSy := \frac{\eta yld \cdot Fty}{\sigma y \cdot FSy} - 1$ $MSy = 0.14$ #

Shear $MSs := \frac{\eta ult \cdot Fsu}{\tau s \cdot FSu} - 1$ $MSs = 0.419$ #

3.1.2 Conical Flange Stability Assessment

Conical Flange Stability Analysis

The Vacuum Case Conical Flange is subjected to an external pressure for the internal pressure condition of 11.76 psi Limit. Under this load, the Conical Flange undergoes hoop compression and must be analyzed for general stability. The problem of an orthotropic conical shell subjected to lateral pressure is approached by the application of a Knock Down Factor (based on W. T. Koiter's asymptotic theory) to the bifucation buckling capability obtained from a modified Finite Element model of the Vacuum Case. The modifications applied to the original model increased substantially the Conical Flange mesh definition in order to obtain a converged eigenvalue. Although not as sensitive to initial imperfections as the extreme case of a cylinder under axial compression, the shell is still sensitive to initial imperfections in this failure mode. The actual boundary conditions are acounted for by the use of the FE model resulting load distribution due to the applied pressure. Strap peloads and a gasket line load are used to obtain subparametric prebuckling stress distributions. The internal pressure is then applied and a linear elastic bifurcation buckling eigenvalue is obtained relative to the applied internal pressure. A Safety Factor of 1.10 is specified for this loading.

Conical Flange Knock Down Factor for Hydrostatic Pressure

Geometry and Material Properties. (ribs OUTSIDE)

$E := 10.8 \cdot 10^6 \cdot (1.0)$ Modulus of elasticity, psi

$\beta := 0.31$ Poisson's ratio

$t_{nm} := 0.095$ Skin nominal thickness, in

$tol_s := 0.01$ Skin minimum thickness tolerance, in

$H_s := 1.062$ Overall stringer height, in

$t_{snm} := 0.14$ Axial rib nominal thickness, in

$tol_a := 0.01$ Axial minimum thickness tolerance, in

$l_s := 1$ +/-1 : negative for inside rib

$b_s := 8.364$ Axial rib spacing, in

$H_r := 0.571$ Overall ring height, in

$t_{rnm} := 0.135$ Circumferential rib nominal thickness, in

$tol_c := 0.01$ Circumferential rib low side tolerance, in

$l_r := 1$ +/-1 : negative for inside rib

$d_r := 4.5$ Circumferential rib spacing, in

$R_{rr} := 0.375$ Rib to rib fillet radius, in

$R_{rs} := 0.125$ Rib to skin fillet radius, in

$f := 0$ Hole depth as a fraction of the rib clear height (set to zero for no hole)

$u := 27 \cdot deg$ Cone angle, radians

$R := \frac{42.599}{\sin(u)}$ Define radius of curvature of cone to reference surface location, in

$R = 93.832$

$L := 24.0$ Slanted Length, in

$SF := 1.10$ Safety Factor

$p := 11.76 \cdot (SF)$ Applied Hydrostatic Pressure, psi

$p = 12.936$

$p_{ref} := 14.7$ Reference Pressure, psi

Constitutive Equations

$$C := \begin{pmatrix} C_{11} & \beta \cdot C_m & 0 & C_{14} & 0 & 0 \\ \beta \cdot C_m & C_{22} & 0 & 0 & C_{25} & 0 \\ 0 & 0 & C_{33} & 0 & 0 & 0 \\ C_{14} & 0 & 0 & C_{44} & \beta \cdot D_b & 0 \\ 0 & C_{25} & 0 & \beta \cdot D_b & C_{55} & 0 \\ 0 & 0 & 0 & 0 & 0 & C_{66} \end{pmatrix}$$

Thickness used in stability analysis :
(Note : $1.05 * t_{min}$ or t_{nom} whichever is less)

$t = 0.089$ Skin, in

$t_s = 0.137$ Axial rib, in

$t_r = 0.131$ Circumferential rib, in

Numerically, the coefficients are :

$$C = \begin{pmatrix} 1246490.953 & 330577.498 & 0 & 91669.483 & 0 & 0 \\ 330577.498 & 1234225.412 & 0 & 0 & 44492.684 & 0 \\ 0 & 0 & 367900.763 & 0 & 0 & 0 \\ 91669.483 & 0 & 0 & 62620.723 & 219.436 & 0 \\ 0 & 44492.684 & 0 & 219.436 & 16105.608 & 0 \\ 0 & 0 & 0 & 0 & 0 & 428.966 \end{pmatrix}$$

Imperfection Amplitude

Compute neutral-axis based coefficients

$$Cb44 := C_{4,4} - \frac{(C_{1,4})^2}{C_{1,1}} \qquad Cb55 := C_{5,5} - \frac{(C_{2,5})^2}{C_{2,2}}$$

$Cb44 = 55879.163$ $\qquad$ $Cb55 = 14501.688$

For specially orthotropic wall construction. Radius of curvature (to the skin CL) is given by : $R = 93.832$ (in)

$$_{o} := \frac{1}{29.8} \cdot \sqrt{\frac{R}{\left(\frac{Cb44 \cdot Cb55}{C_{1,1} \cdot C_{2,2}}\right)^{0.25}}}$$

$_{o} = 0.835$

For monocoque (NASA SP-8007)

$$_{m} := \frac{1}{16} \cdot \sqrt{\frac{R}{t}}$$

For equivalent monocoque, then : $\quad _{o} = \frac{1}{16} \cdot \sqrt{\frac{R}{t_e}}$

Solve for t_e

$$t_e := \frac{1}{256} \cdot \frac{R}{_{o}^{2}}$$

$t_e = 0.526$ (in)

Compute KDF, as a cylinder under axial bending compression using NASA SP-8007 equation. This is used ONLY to get a TYPICAL imperfection. The higher bending KDF is used to reflect better manufacturing.

$$_{b} := 1 - 0.731 \cdot \left(1 - e^{-\ _{o}}\right)$$

$_{b} = 0.586$

Use the KDF factor above, and the relation of relative imperfection amplitude vs. the KDF for an isotropic cylinder under axial compression to get a TYPICAL imperfection.

$$y(\,,\,) := 8.231558521307306 - 84.98842544713989\cdot\,, + 400.8970271069557\cdot\,,^{2} - 1060.73887874186\cdot\,,^{3} \ldots$$
$$+ 1665.239629380405\cdot\,,^{4} - 1539.81680162251\cdot\,,^{5} + 774.7616151347756\cdot\,,^{6} - 163.5857306811959\cdot\,,^{7}$$

This relation was obtained by fitting a polynomial to W.T. Koiter's asymptotic theory results for monocoque unpressurized cylinders under axial compression. Used here to get a TYPICAL imperfection ONLY.

$y' := y(\Rightarrow_b)$ ... Using axial bending compression KDF

$y' = 0.096$ ... Relative imperfection amplitude (% of t_e)

Using the previously computed equivalent thickness to get

$yt_e := y'\cdot t_e$

$yt_e = 0.05$ ... TYPICAL Physical Imperfection amplitude, in. Note this is as well the specified **Design Value**.

KDF for (Local Cylindrical) Configuration

Imperfection Analysis : Hydrostatic Load

$\beta_{21} := \dfrac{C_{1,2}}{C_{1,1}}$ $\beta_{12} := \dfrac{C_{2,1}}{C_{2,2}}$

$\beta_{21} = 0.265$ $\beta_{12} = 0.268$

Equivalent monocoque shell

$Z_L := \dfrac{L^2}{R\cdot t_e}\cdot\sqrt{1 - \beta_{21}\cdot\beta_{12}}$

$Z_L = 11.259$

Lateral or Hydrostatic Pressure

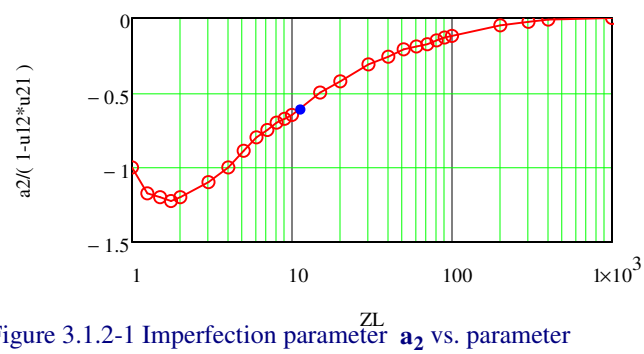

Figure 3.1.2-1 Imperfection parameter **a_2** vs. parameter **Z_L** for cylinders subjected to lateral or hydrostatic pressure. The dot marks the current design.

From the curve

$A_2 = -0.612$ Design is imperfection sensitive for **$A_2 < 0.0$**

Imperfection parameter (imperfection sensitive for $a_2 < 0.$)

$a_2 := A_2 \cdot (1 - \beta_{21} \cdot \beta_{12})$ Design is imperfection sensitive for $\mathbf{a_2 < 0.}$

$a_2 = -0.56875$

With the initial guess : $, = 0.75$

Solve the following asymptotic theory equation by iteration : $\frac{3}{2} \cdot \sqrt{-3 \cdot a_2} \cdot , _{cr} \cdot |y'| - (1 - , _{cr})^{\frac{3}{2}} = 0$

To get

$, _H = 0.7333$ **KDF** for lateral or hydrostatic pressure. Used here since lateral stability behavior controls.

Compute Margin of Safety

$p_{cl} := 1.369045 \cdot p_{ref}$ From MSC/NASTRAN FE model, after convergence. See Figure 3.1.2-2

$p_{cl} = 20.125$

$p_{cr} := , _H \cdot p_{cl}$

$p_{cr} = 14.758$

Then

$MS := \frac{p_{cr}}{p} - 1$

$MS = 0.14$	General Lateral Stability
	$SF = 1.1$

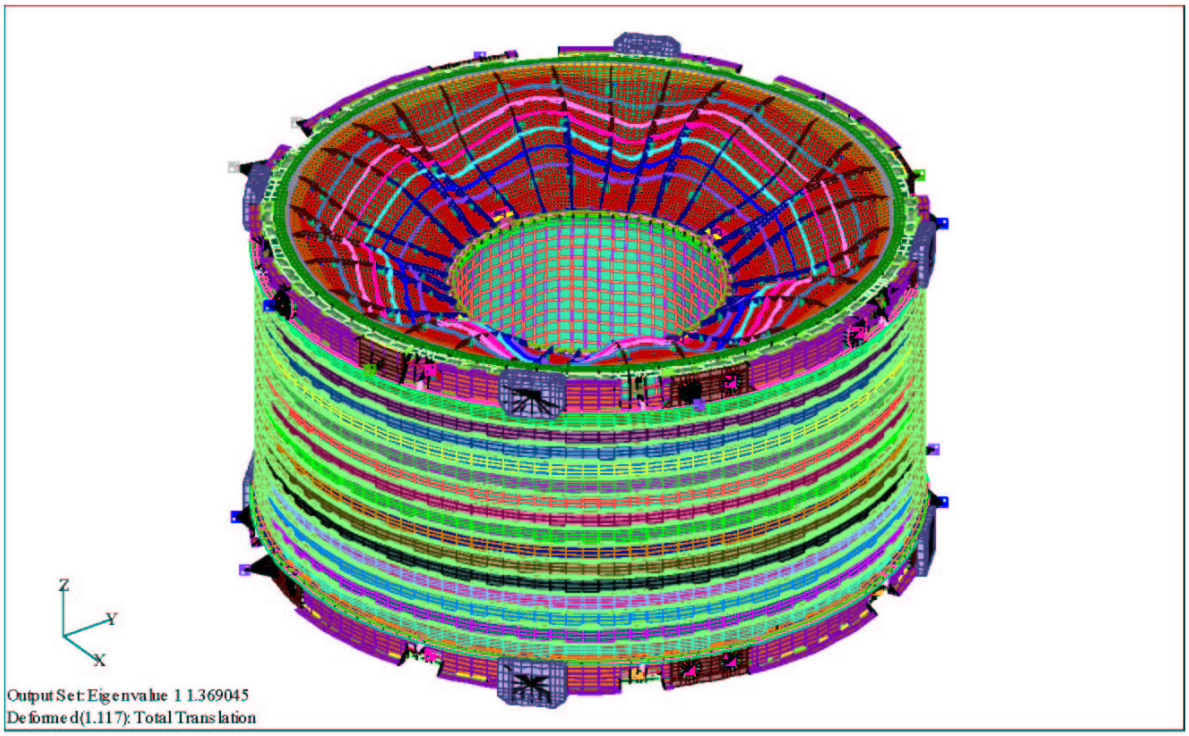

Figure 3.1.2-2 From NASTRAN (Current Eigenvalue analysis includes 1950.0 lb strap preload, circumferential rib taper, additional thickness in outer pocket, gasket spring load, 2 in fillet in o/c end ring, all current model definitions, and latest o/c design. Also includes conical flange axial rib modification at the outer radius end and high resolution outer case discrete rib model)

KDF vs. Relative Imperfection Curve For Conical Flange

To aid in the assessment of off-design conditions (larger imperfections), the following curve have been computed. This curve relates the **KDF** to the **Relative Imperfection** for the specific configuration of the inner cylinder. Applies only to small off-design imperfection deviations, not to off-design thickness.

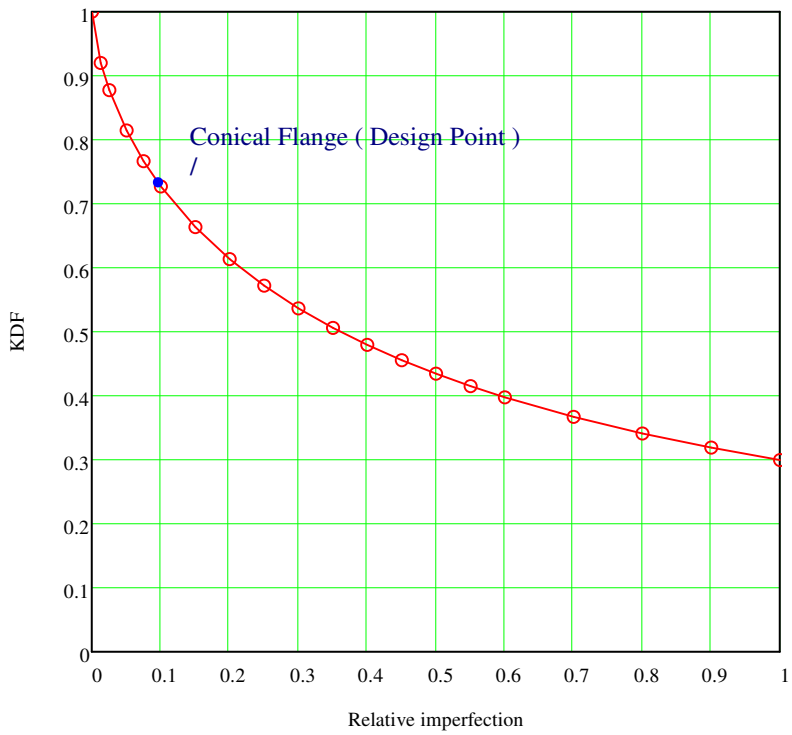

Figure 3.1.2-3 KDF vs. Relative Imperfection Curve For Conical Flange.

y_i =	$,_i$ =
0.000	1
0.013	0.9202
0.025	0.8773
0.050	0.8146
0.075	0.7667
0.100	0.7272
0.150	0.6637
0.200	0.6134
0.250	0.5719
0.300	0.5366
0.350	0.5061
0.400	0.4793
0.450	0.4556
0.500	0.4343
0.550	0.4151
0.600	0.3977
0.700	0.3671
0.800	0.3412
0.900	0.3188
1.000	0.2993

To use, follow the **Example** below :

For a **physical imperfection** amplitude of $\varepsilon := .075$ in, and the **design stability thickness** of $t_e = 0.526$

Compute the **relative imperfection** from

$$y' := \frac{\varepsilon}{t_e} \qquad y' = 0.143$$

From the curve, obtain : $, := ,'_H(y')$ $\quad , = 0.6719$

With $p_{cl} = 20.125$ (psi), obtained previously, we have $p_{cr} := , \cdot p_{cl}$ $\quad p_{cr} = 13.523$ (psi)

The new Margin of Safety is then computed from

$$MS := \frac{p_{cr}}{p} - 1$$

MS = 0.05	Conical Flange General Stability
	SF = 1.1

References

[1] **Buckling of Bars, Plates, and Shells**
B.O. Almroth and D.O. Brush, McGraw-Hill

3.2 Outer Cylinder

3.2.1 Outer Cylinder Strength Assessment

3.2.1 Outer Cylinder Strength Analysis

Introduction

The Outer Cylinder, shown in Figure 3.2.1-1, is a 109.256-inch outer diameter and a 46.578-inch length cylinder manufactured from a 7050-T7451 Aluminum Rolled Ring Forging. The outer skin thickness varies from 0.265-inch at the bottom to 0.152-inch at ring 10, located just above the middle of the cylinder. A total of fourteen 0.1-inch thick evenly spaced circumferential ribs help stabilize the skin of the Outer Cylinder under buckling loads. A detailed view of the outer cylinder profile is shown in Figure 3.2.1-2.

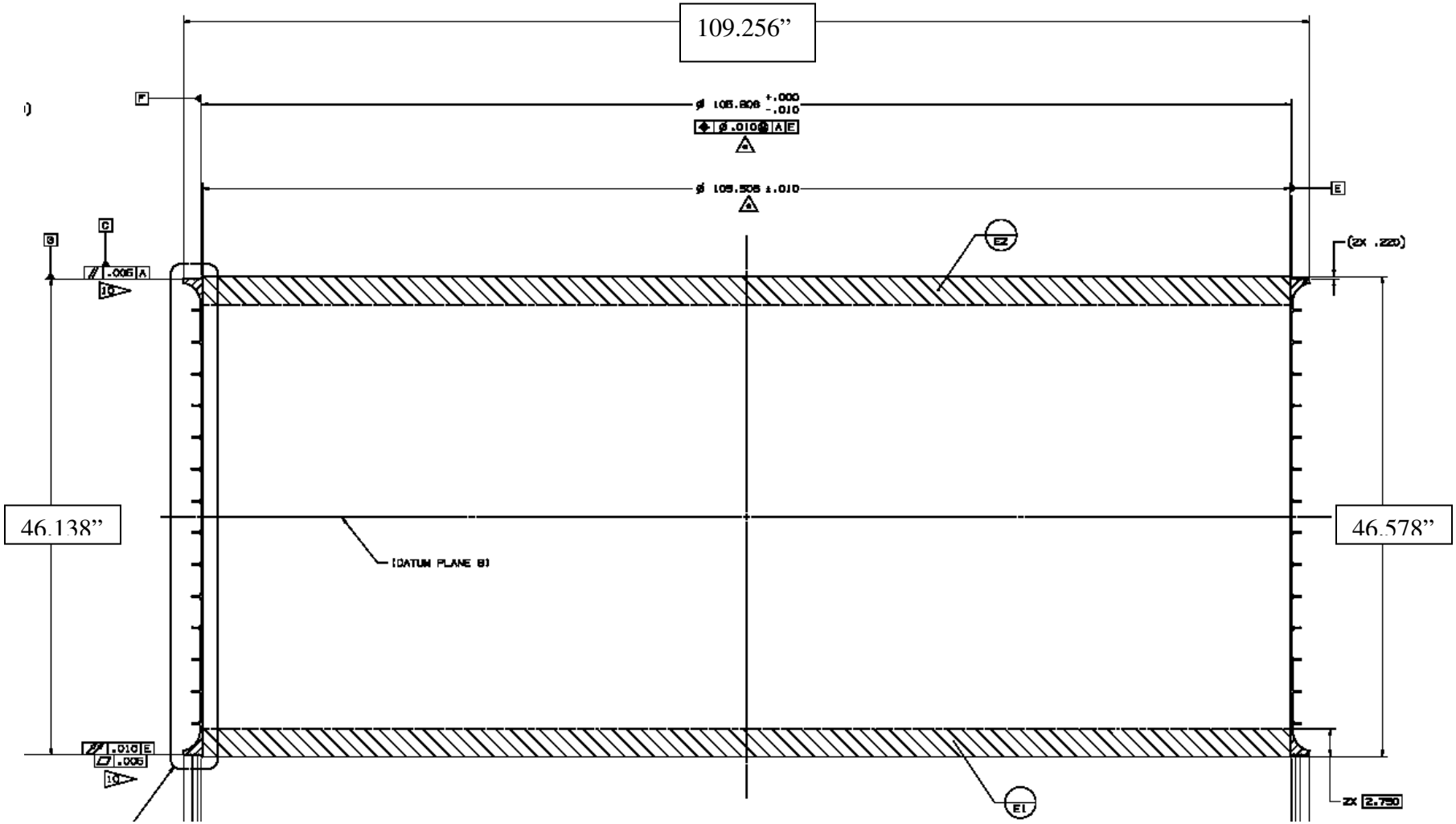

Figure 3.2.1-1: Side View of Vacuum Case Outer Cylinder

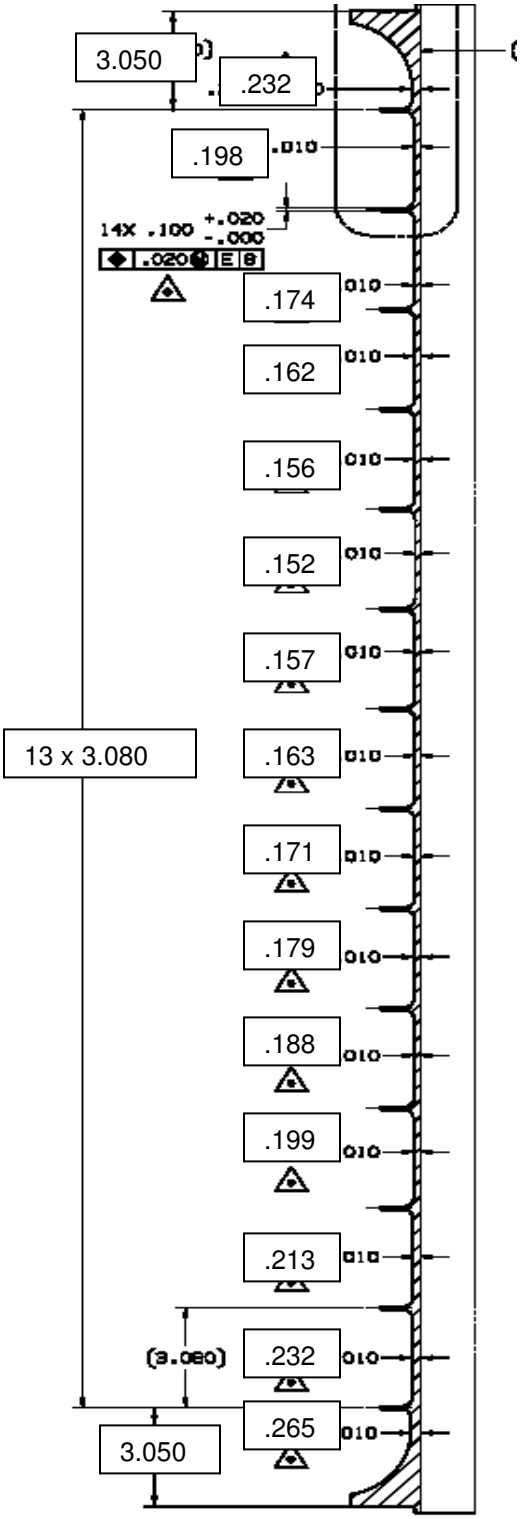

Figure 3.2.1-2: Profile of Outer Cylinder (Dimensions are in Inches)

Analysis Method Used to Perform Strength Analysis for the Outer Cylinder

MSC NASTRAN v2001 is used for the finite element analysis of the Outer Cylinder. The pre/post processing software used in building and analyzing the NASTRAN input and output is FEMAP version 8.1. The hi-fi Outer Cylinder model is composed of CQUAD4, HEXA, PENTA and RSSCON elements. The ends of the cylinder are connected to the top and bottom Support Rings with RBE2, CBUSH and Linear Gap elements. The entire Vacuum Case model, including the high fidelity Outer Cylinder, is integrated with the USS-02 and various other experiment models to make up the total AMS-02 payload. The results from this model were used to determine the critical stresses for this component.

The linear gap elements are used to simulate the behavior at the bolt interface that attaches the Outer Cylinder to the top and bottom Support Rings. Non-linear analysis was not possible since the gap elements were limited to linear static analysis only. Taking the resultant case specific strap loads and applying them to the Vacuum Case with FORCE cards simulated the nonlinear portion of the loads model.

Outer Cylinder Finite Element Model Checks

Strain energy and rigid body modes were checked using the high fidelity Outer Cylinder Vacuum Case model combined with the remaining components to make up the full payload model. The overall payload model used in the analysis is version 6-02a found in the /hsm/bsommer/ams/bulk/6-02a directory. The Vacuum Case model used for the Outer Cylinder analysis is located in the /hsm/bsommer/ams/bulk/stressmods/outercylinder directory and titled outer-stress.dat. Figure 3.2.1-3 shows the fine meshed Outer Cylinder model.

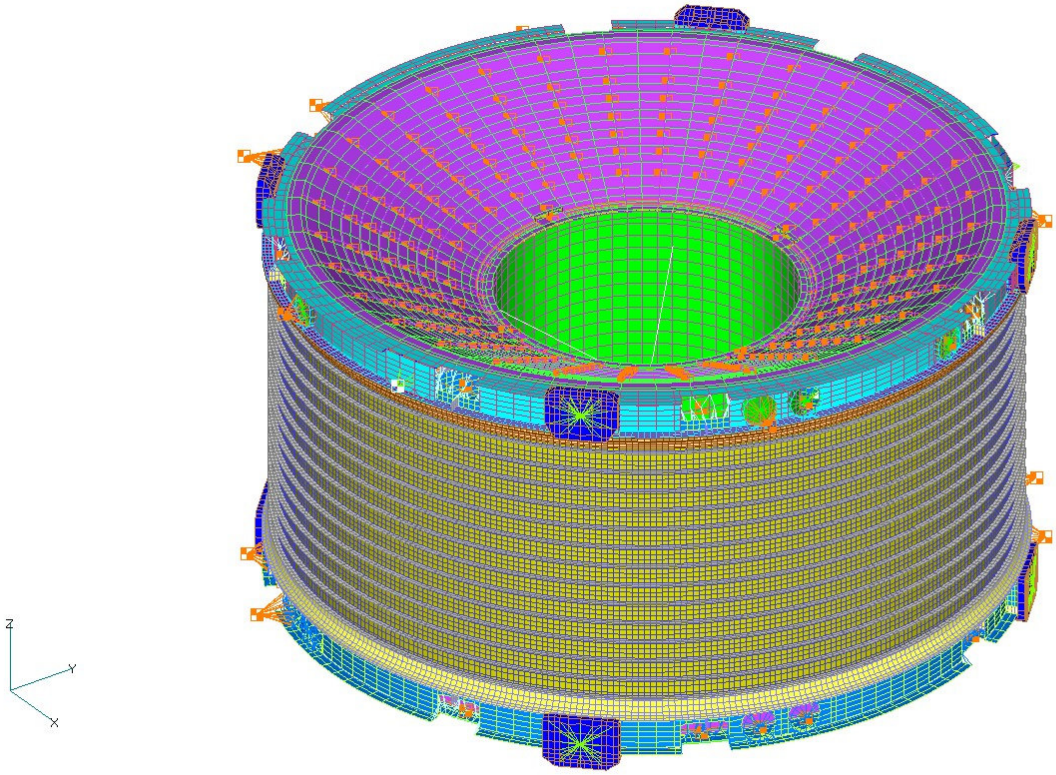

Figure 3.2.1-3: Outer Cylinder Stress Model

The strain energy and rigid body modes checks for this model are found in the /hsm/bsommer/ams/checks/6-02 directory entitled checkamsouter.f06. The strain energy check limits that are acceptable are for values of 1.0E-5 for translations and 1.0E-3 for rotations. The results for the strain energy checks for the KGG, KNN, KFF matrices are found in Tables 3.2.1-1 through 3.2.1-3. Only the diagonal terms of the 6x6 matrix are listed. The results for the rigid body modes, listed in Table 3.2.1-4 shows six rigid body modes with a good separation between the last rigid body mode 6 and the first real mode mode 7. The total model Mass and CG location is shown in Table 3.2.1-5. The mass units are in slinches and the z coordinate is in the orbiter coordinate system.

Table 3.2.1-1: KGG for Outer Cylinder Model

RESULTS OF RIGID BODY CHECKS OF MATRIX KGG (G-SET) FOLLOW:
PRINT RESULTS IN ALL SIX DIRECTIONS AGAINST THE LIMIT OF 1.000000E-02

DIRECTION	STRAIN ENERGY	PASS/FAIL
1	1.276314E-06	PASS
2	1.189297E-06	PASS
3	1.845768E-08	PASS
4	7.324776E-04	PASS
5	8.246698E-04	PASS
6	1.555420E-03	PASS

Table 3.2.1-2: KNN for Outer Cylinder Model

RESULTS OF RIGID BODY CHECKS OF MATRIX KNN (N-SET) FOLLOW:
PRINT RESULTS IN ALL SIX DIRECTIONS AGAINST THE LIMIT OF 1.000000E-02

DIRECTION	STRAIN ENERGY	PASS/FAIL
1	1.411614E-06	PASS
2	1.472126E-06	PASS
3	4.857794E-07	PASS
4	1.684884E-04	PASS
5	7.925826E-04	PASS
6	3.047390E-03	PASS

Table 3.2.1-3: KFF for Outer Cylinder Model

RESULTS OF RIGID BODY CHECKS OF MATRIX KFF (F-SET) FOLLOW:
PRINT RESULTS IN ALL SIX DIRECTIONS AGAINST THE LIMIT OF 1.000000E-02

DIRECTION	STRAIN ENERGY	PASS/FAIL
1	1.411614E-06	PASS
2	1.472126E-06	PASS
3	4.857794E-07	PASS
4	1.684884E-04	PASS
5	7.925826E-04	PASS
6	3.047390E-03	PASS

Table 3.2.1-4: Rigid Body Modes for Outer Cylinder Model

MODE NO.	EXTRACTION ORDER	EIGENVALUE	RADIANS	CYCLES (Hz)	GENERALIZED MASS	GENERALIZED STIFFNESS
1	1	-3.50E-08	1.87E-04	2.98E-05	1.00E+00	-3.50E-08
2	2	7.34E-08	2.71E-04	4.31E-05	1.00E+00	7.34E-08
3	3	2.12E-07	4.61E-04	7.33E-05	1.00E+00	2.12E-07
4	4	2.74E-07	5.24E-04	8.33E-05	1.00E+00	2.74E-07
5	5	4.55E-07	6.75E-04	1.07E-04	1.00E+00	4.55E-07
6	**6**	**5.01E-07**	**7.08E-04**	**1.13E-04**	**1.00E+00**	**5.01E-07**
7	**7**	**3.59E+03**	**5.99E+01**	**9.54E+00**	**1.00E+00**	**3.59E+03**

Table 3.2.1-5: Mass for Stress and Loads Model and CG For Outer Cylinder Model

Dircetion Mass Axis System (m)	Stress Model Mass (slinches)	X-C.G. (in)	Y-C.G. (in)	Z-C.G. (in)
X	2.6301E+01	2.09E-15	1.24E+00	-3.08E+00
Y	2.6301E+01	-1.29E-01	-1.62E-15	-3.08E+00
Z	2.6301E+01	-1.29E-01	1.24E+00	-6.33E-17

Loads Model Mass = 3.8851E+01

The cg coordinates for Table 3.2.1-5 are defined around a fully loaded AMS model. The mass differential between the loads model and the stress model is due to the fact that the cold mass and nonlinear straps are not included in the model. These components have been replaced with concentrated forces applied at the strap attachment locations. The strap forces used in the model are the case consistent strap loads calculated in the nonlinear static analysis using the loads model. To more closely match the overall loads behavior the rotational load factors are still applied around the CG for the entire payload.

Table 3.2.1-6: CG Location for AMS-02 in the Orbiter Z location

X (in)	Y (in)	Z (in)
-2.46E-01	2.58E+00	3.86E+02

Loads and Constraints

The AMS-02 payload model is constrained at five trunnion locations. A total of 256 load cases for multiple launch/landing scenarios were run using NASTRAN. The critical load cases for the Outer Cylinder were determined by sorting the element stresses from the Outer Cylinder loads model. The high fidelity Outer Cylinder model is incorporated into the loads Vacuum Case model for use in determining the peak stresses. A total of five load cases were chosen as the critical load cases.

The list of the critical load cases with the corresponding load factors is shown in Table 3.2.1-7. Note that the 2### load cases are for landing with a full helium tank. 1### are launch load cases. The Load Factors used for this analysis are listed in Table 4-1, Page 17 of the AMS-02 Structural Verification Plan for STS and ISS(JSC-28792, Rev.C). The NASTRAN run streams for these load cases can be found in the /hsm/bsomer/ams/nonlin/outercylinder/2000 directory and labeled R20##.dat or /hsm/bsommer/ams/nonlin/outercylinder/1000 with the titles R10##.dat.

Table 3.2.1-7: Critical Load Case Load Factors for Outer Cylinder Model

Load Case	Event	Nx (g)	Ny (g)	Nz (g)	Rx (rad/s^2)	Ry (rad/s^2)	Rz (rad/s^2)
1028	Launch	5.7	-1.6	-5.9	10	-25	-18
1030	Launch	5.7	-1.6	-5.9	-10	25	-18
2031	Landing Full	4.5	-2	-6.5	-20	-35	15
2057	Landing Full	-4.5	-2	-6.5	20	35	15
2058	Landing Full	-4.5	-2	-6.5	20	35	-15

An interface loads comparison between the stress and loads model, shown in Table 3.2.1- 8 shows total mass vs. trunnion reaction load. Only one load case is shown in the tables to illustrate the similarities between the two models.

Table 3.2.1-8: Mass Calculated from Trunnion Forces vs. Mass of Stress Model

Axis	Total Trunnion Load	Load Factor	Mass from Trunnion Reaction Load LC 1028	Mass Stress Model
X	-84870.26	5.7	1.4890E+04	1.4998E+04
Y	23831.41	1.6	1.4895E+04	1.4998E+04
Z	88007.75	5.9	1.4917E+04	1.4998E+04

The discrepancies in the mass/force comparison are due to the fact that the Vacuum Case is attached to the USS-02 before the pressure load is applied. The trunnion loads due to pressure are shown in Table 3.2.1-9.

Table 3.2.1-9: Trunnion Loads Due to 1 atm Pressure Only

Trunnion Location	Fx (lbf)	Fy (lbf)	Fz (lbf)
Primary	2.09E+02	0	5.20E+01
Primary	1.47E+02	0	-1.38E+02
Secondary	0	0	-7.08E+01
Secondary	0	0	2.39E+01
Keel	0	-8.94E+01	0

The values shown in Table 3.2.1-9 would be subtracted from the Mass calculation shown in column four of Table 3.2.1-8.

Strength Analysis Results for Outer Cylinder

The maximum stresses for the Outer Cylinder are shown below. NASPOST was used to sort the maximum stresses from the load cases listed in Table 3.2.1-6. The punch files containing the analysis results are found in the /hsm/bsommer/ams/stress/outer/6-02 directory. The files are named according to the load case. (i.e.. gap1030.pch, gap2031.pch, etc.....) The NASPOST list file can be found in /hsm/bsommer/ams/naspost/outer/6-02/ directory. A copy of this list file is located in Appendix A1. The load case containing the highest stress for principle, VonMises and shear are shown below in Table 3.2.1-10. Contour plots of the highest principal stress are shown in Figures 3.2.1-4 through 3.2.1-5.

Table 3.2.1-10: Highest Stresses for Outer Cylinder Model

Load Case ID	Elem. ID	Elem. Type	Stress Type	MAX Stress (ksi)	Reference Page
2031	2000330	Quad4-plate	Max Principal	-18.97	A1-2
2031	2000330	Quad4-plate	Max Vonm	17.23	A1-3
2031	2000330	Quad4-plate	Max Shear	9.48	A1-4

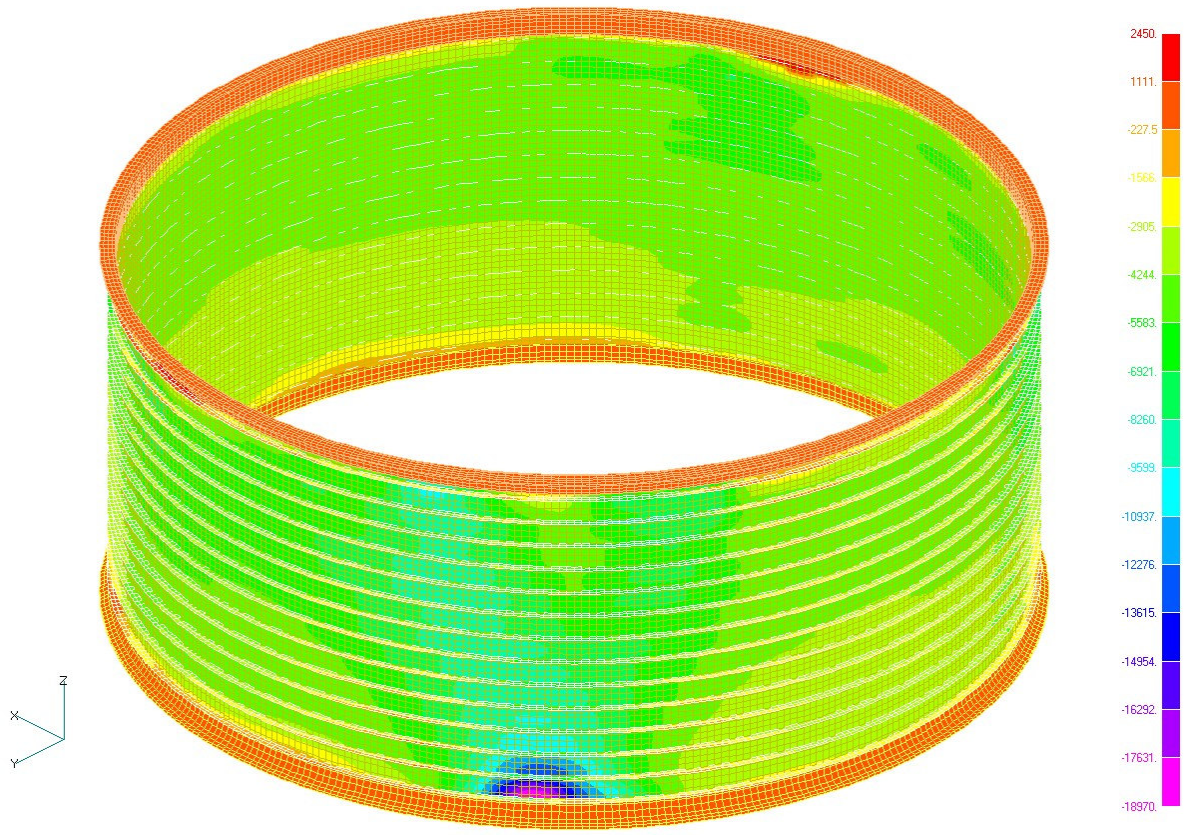

Figure 3.2.1-4: Outer Cylinder Stress Contour for Load Case 2031

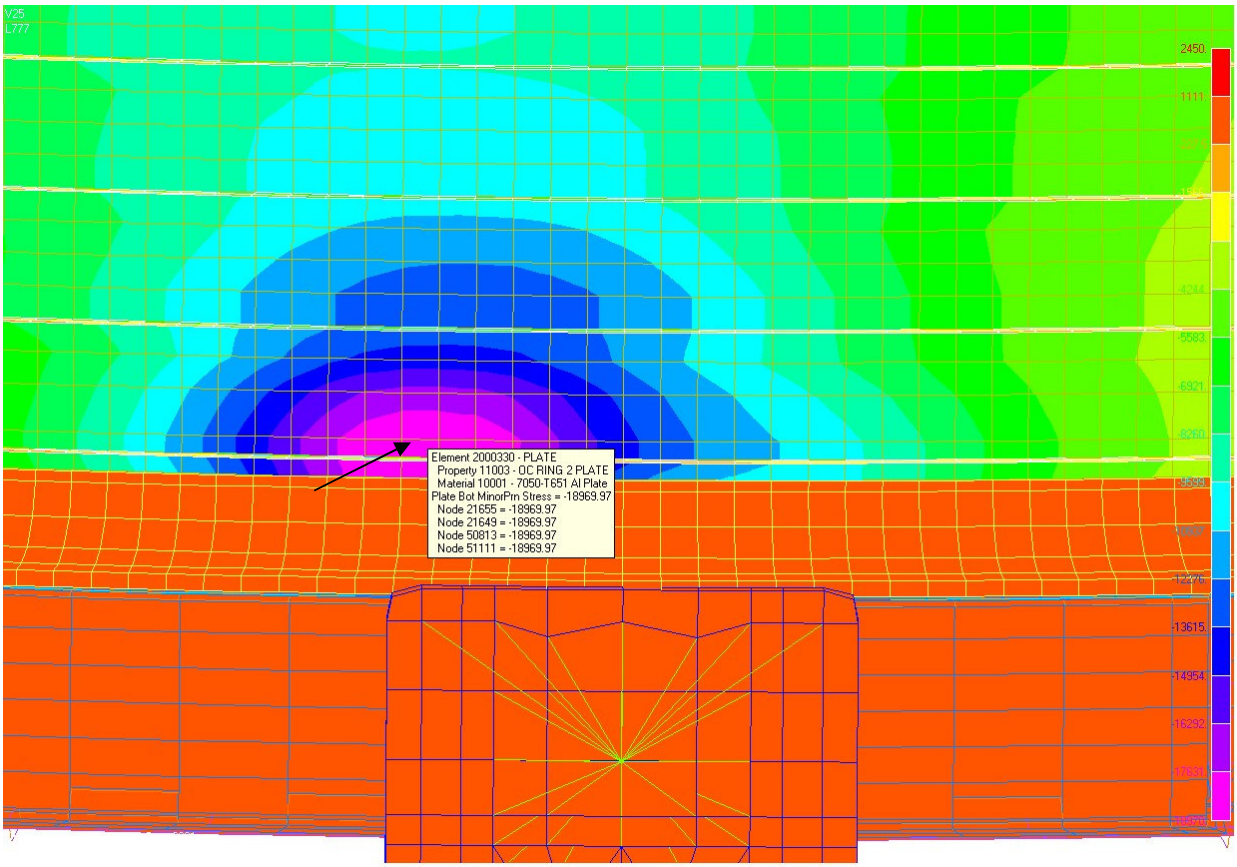

Figure 3.2.1-5: Outer Cylinder Stress Contour Detail for Load Case 2031

Margin of Safety for Outer Cylinder Strength

OUTER CYLINDER, VACUUM CASE, AMS-02 7050-T7451 (AMS 4108) Rolled Ring Forging

Material allowables are from MIL-HBK-5H Table 3.7.3.0(d) for 2.0" to 4.0" thick Hand forging

$Ftu := 67000\,psi$ Ultimate tensile strength

$Fty := 55000\,psi$ Compressive yield strength

$Fsu := 41000\,psi$ Ultimate shear strength

$FSy := 1.1$ Yield Factor of Safety

$FSu := 1.4$ Ultimate Factor of Safety

$\gamma_u := 0.92$ Thermal reduction factor at 140 F from MIL-HBK-5H Figure 3.7.3.2.1.

$\gamma_y := 0.98$

The maximum stresses for the Outer Cylinder occur in load case 2031. Margins for the Outer Cylinder will be calculated based on the stress values shown below.

$\sigma_{ult} := 18969.97\,psi$ (max. principal) Element 2000330

$\sigma_{yield} := 17231.25\,psi$ (max. Von-Mises) Element 2000330

$\tau_{shear} := 9484.98\,psi$ (max. shear) Element 2000330

Margins of Safety

Ultimate $MSu := \frac{\gamma_u \cdot Ftu}{\sigma_{ult} \cdot FSu} - 1$ $MSu = 1.321$

Yield $MSy := \frac{\gamma_y \cdot Fty}{\sigma_{yield} \cdot FSy} - 1$ $MSy = 1.844$

Shear $MSs := \frac{\gamma_u \cdot Fsu}{\tau_{shear} \cdot FSu} - 1$ $MSs = 1.841$

The Outer Cylinder is acceptable for both vacuum and maximum expected flight loads using a temperatrure reduction factor of 0.92 ultimate and 0.98 for yield.

Outer Cylinder Analysis Conclusions

The outer Cylinder for the AMS-02 Vacuum Case is acceptable for the loading conditions defined in the AMS-02 Structural Verification Plan for STS and ISS(JSC-28792, Rev.C) and for a total payload weight of 14809lbs. There are several factors that could change the analysis for the Outer Cylinder. Among them is an increase in the mass of the magnet, helium tank or tracker. Other possible impacts to the current analysis , such as changes in inertial load factors due to updated transient analysis, will have to be assessed when they occur.

Open Action Item from Phase II Safety Review

Purpose of analysis:

Analyze the Vacuum Case Outer Cylinder to a pressure of 0.8 bar. A conservative approach will be taken when calculating the hoop stress. The ribs that help stabilize the skin of the outer cylinder will be ignored and the smallest wall thickness of the outer cylinder will be used to calculate the hoop stress. The following figure shows the Vacuum Case Assembly.

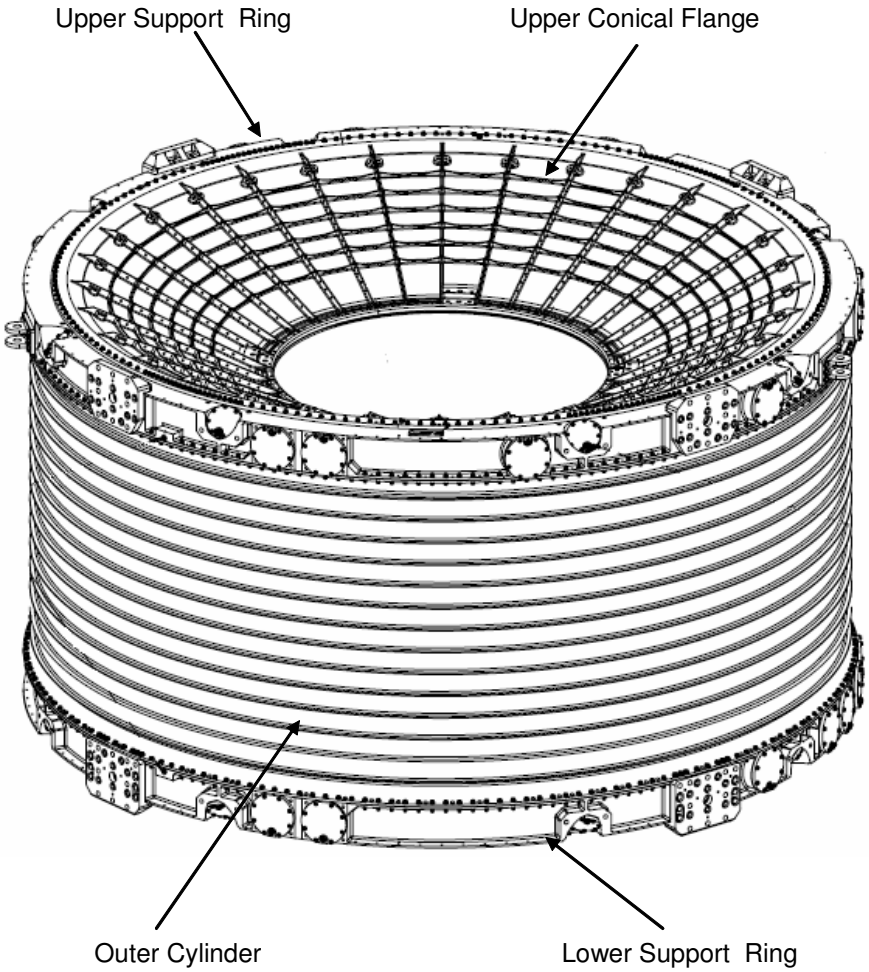

Figure 3.2.1-6: Vacuum Case Assembly

Figure 3.2.1-7 shows the dimensions of the Outer Cylinder. The overall diameter of the Outer Cylinder is 109.256 inches.

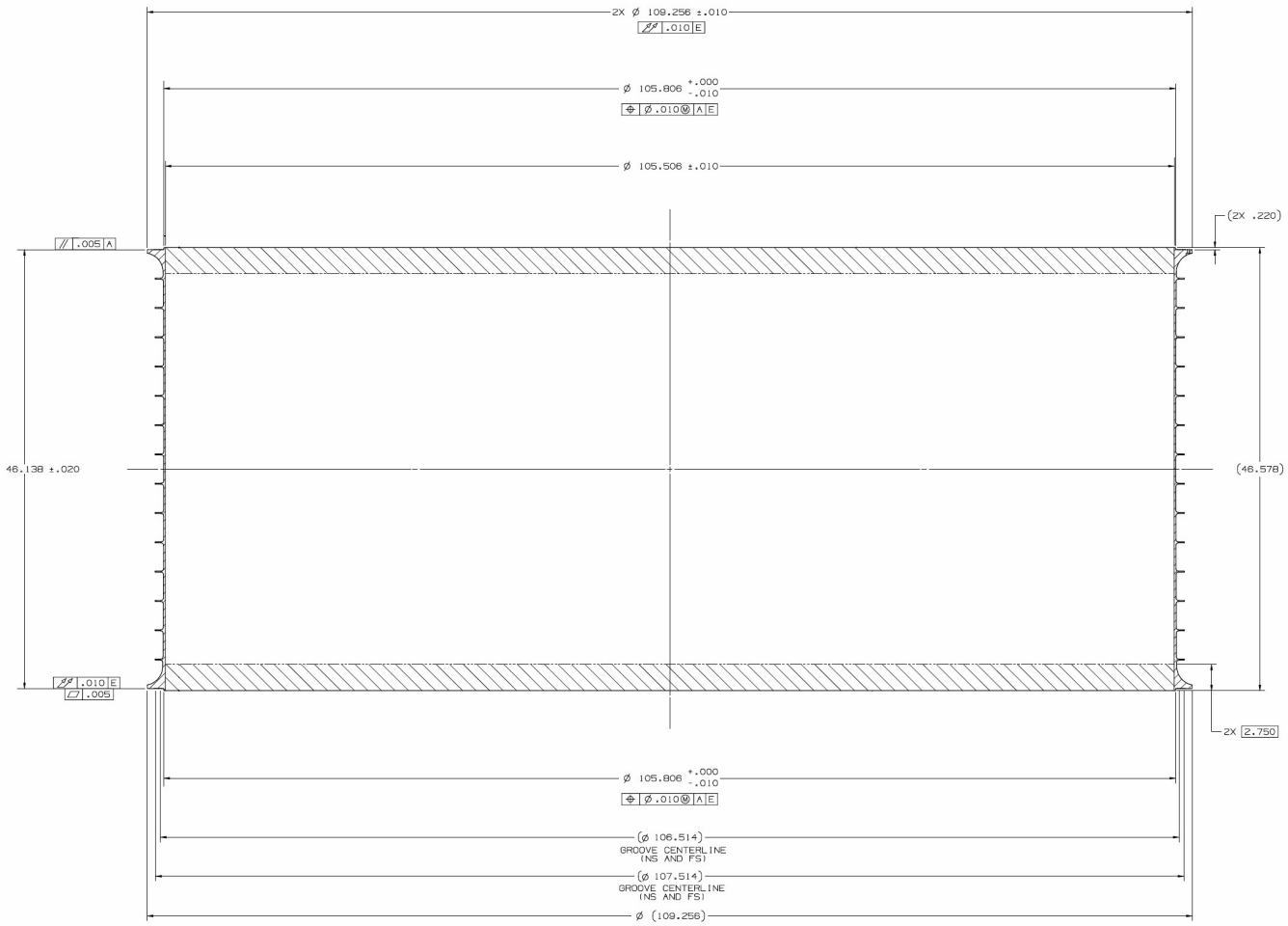

Figure 3.2.1-7: Section View of Vacuum Case Outer Cylinder (Dimensions shown are in inches)

A detailed view of the outer cylinder profile is shown in Figure 3.2.1-8. This figure shows the various wall thicknesses of the Outer Cylinder. The smallest Outer Cvlinder wall thickness is 0.152 inches.

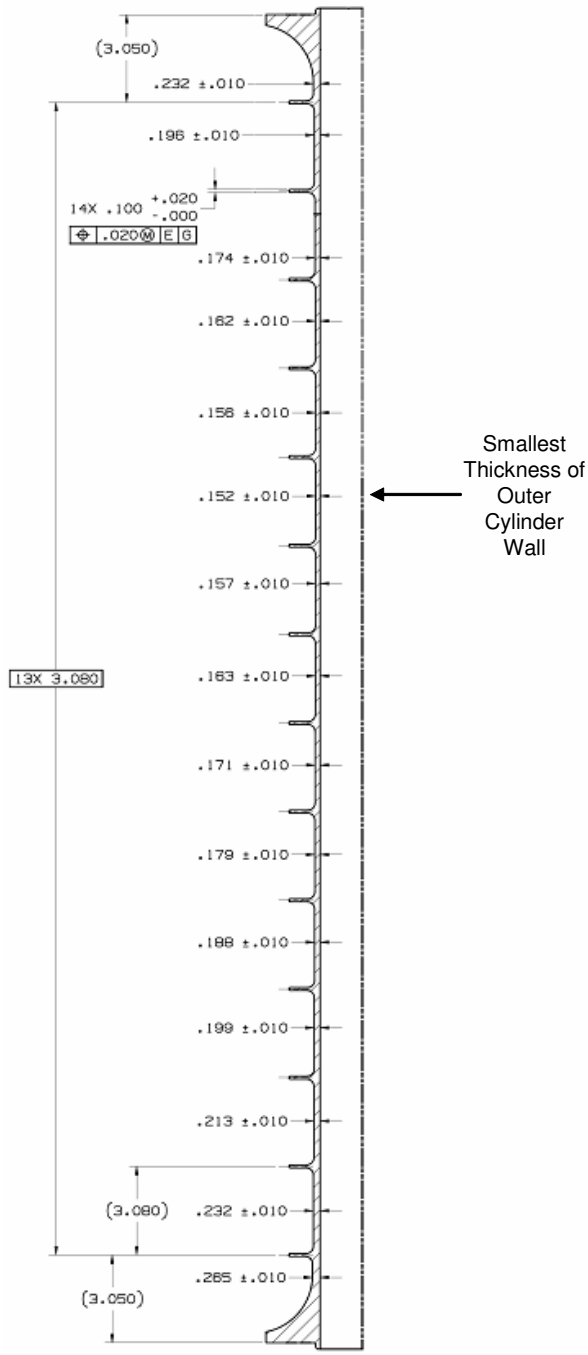

Figure 3.2.1-8: Profile of Outer Cylinder (Dimensions shown are in inches)

Material Properties:

AL Alloy 7050-T7451 Rolled Ring Forging (AMS 4108) - Material allowables are from MIL-HBK-5H Table 3.7.3.0(d) for 2.0" to 4.0" thick hand forging

$F_{tu} := 67000 \cdot psi$ *(Ultimate Tensile Strength)*

Specification:

$t := 0.152in$ *(Smallest wall thickness of Outer Cylinder)*

$d := 109.256 \cdot in$ *(Diameter of Outer Cylinder)*

$R := \frac{d}{2}$ $R = 54.628\,in$ *(Radius)*

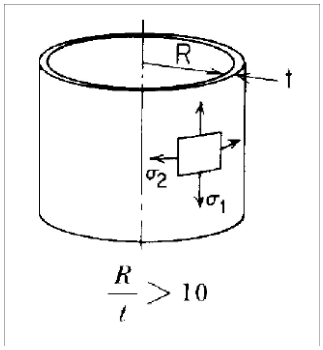

The applied pressure will be defined as,

$q := .8 \cdot bar$

Recall that 1 bar = 14.504 psi, therefore,

$q = 11.603\,psi$ *(Pressure)*

Calculate Stress: (Per Roark's Formulas, 7th ed., Table 13.1)

$\beta := \frac{q \cdot R}{t}$ $\beta = 4170.064\,psi$ *(Hoop Stress)*

Factor of Safety:

$FSu := 2.0$

Margin of Safety:

$MS_u := \frac{F_{tu}}{\beta \cdot FSu} - 1$ $MS_u = 7.033$ *(Ultimate Margin of Safety)*

3.2.2 Outer Cylinder Stability Assessment

3.2.2 Outer Cylinder Stability Assessment

Introduction

The Outer Cylinder, shown in Figure 3.2.2-1, is a 109.256 inch outer diameter and a 46.578 inch length cylinder manufactured from a 7050-T7451 Aluminum Rolled Ring Forging. The outer skin thickness varies from 0.265 inch at the bottom to 0.152 inch between rings 10 and 11, located just above the middle of the cylinder. A total of fourteen 0.1 inch thick evenly spaced circumferential ribs help stabilize the skin of the Outer Cylinder under buckling loads. A section view of the Vacuum Case Outer Cylinder is shown in Figure 3.2.2.-2.

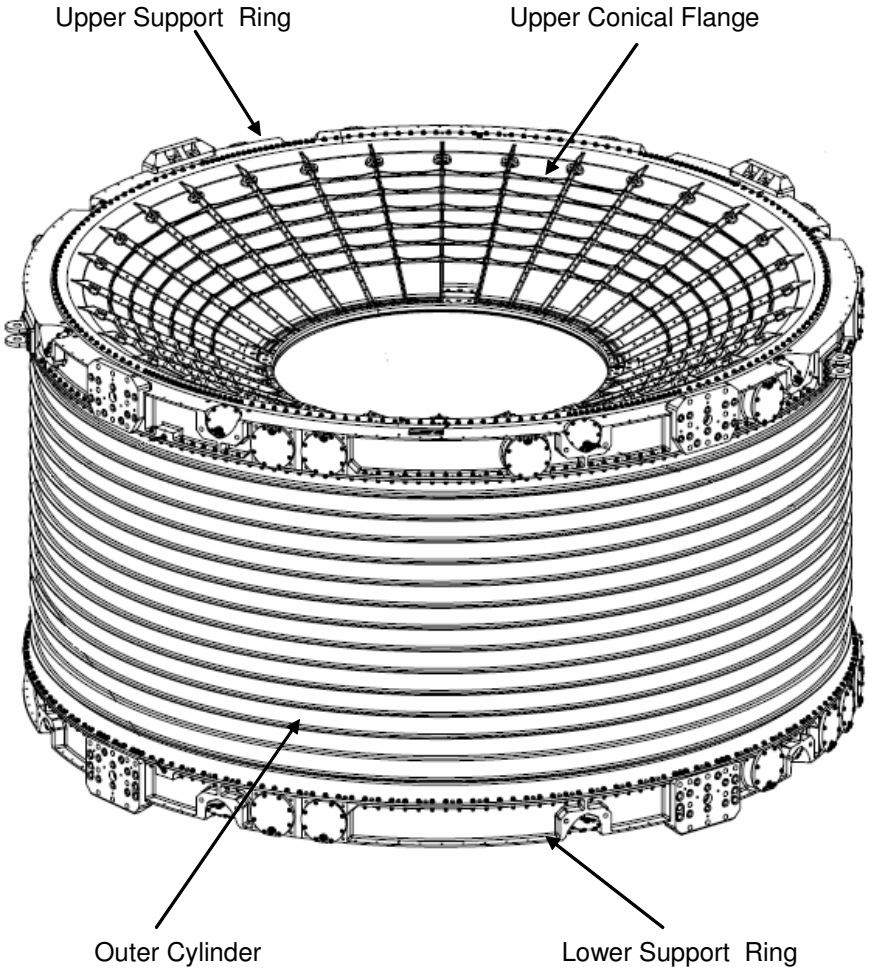

Figure 3.2.2-1 Vacuum Case Assembly

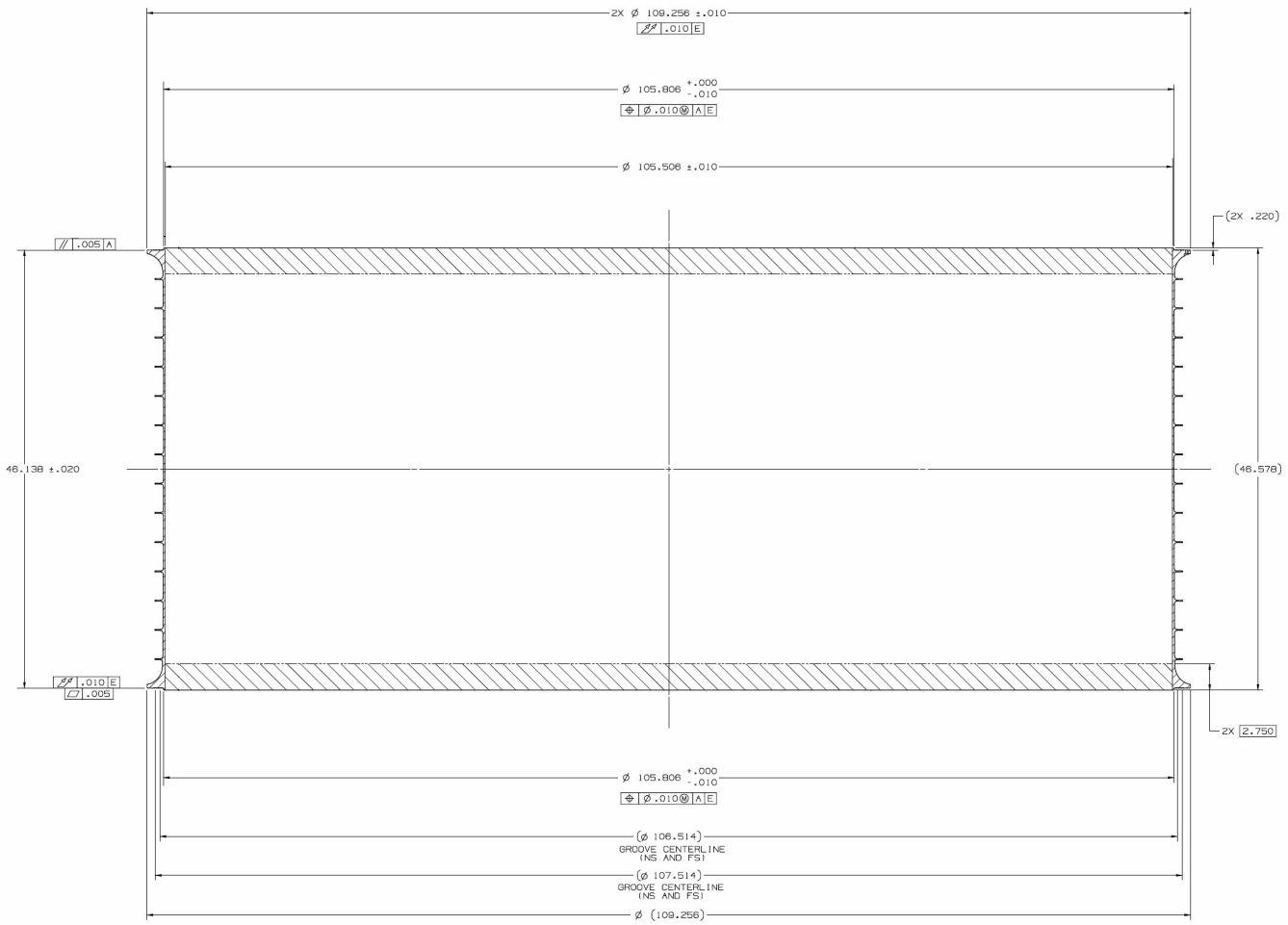

Figure 3.2.2-2 Section View of Vacuum Case Outer Cylinder (Dimensions shown are in inches)

A detailed view of the outer cylinder profile is shown in Figure 3.2.2-3. This figure shows the various wall thicknesses of the Outer Cylinder. The Outer Cylinder rings have been numbered to correspond to the Point-by-Point analysis results shown in Table 3.2.2-1.

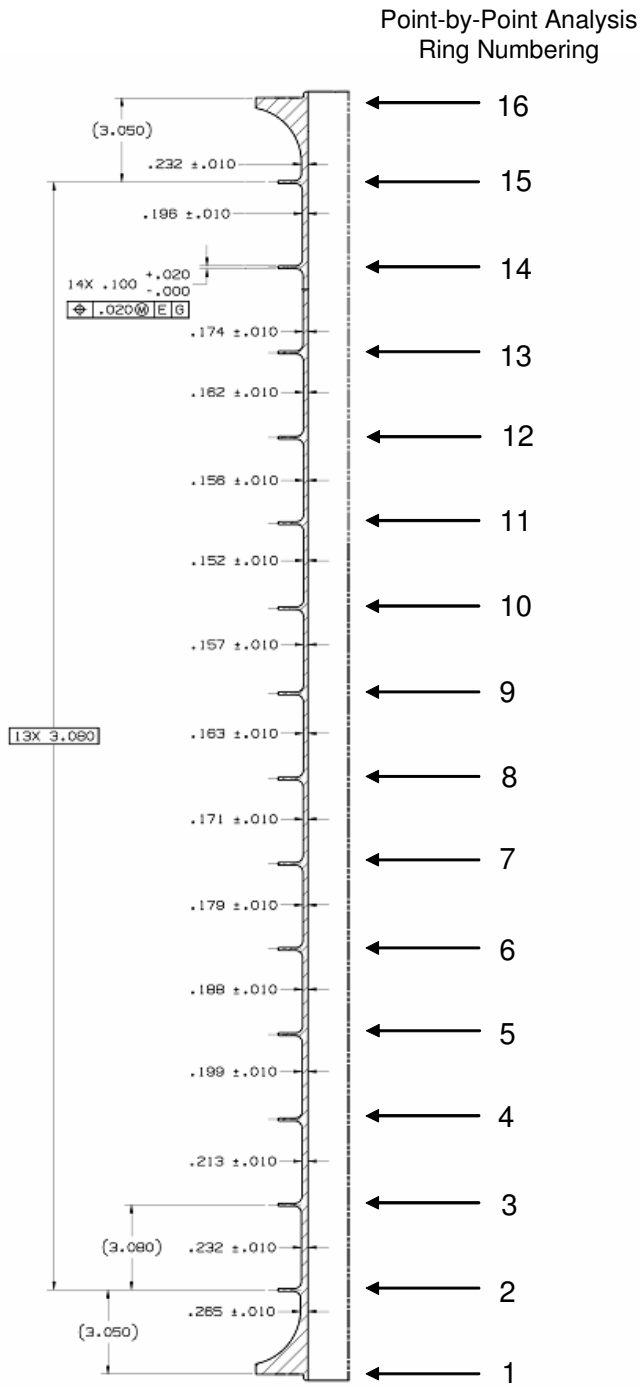

Figure 3.2.2-3 Profile of Outer Cylinder (Dimensions shown are in inches)

The following analysis is the stability assessment of the Vacuum Case Outer Cylinder. Figure 3.2.2-4 depicts bifurcation points and limit points (as in "limiting") via geometrically nonlinear analysis. The presence of unavoidable initial imperfections will cause the structure to fail at a limit point E. Point E may be approximated by computing the "classical" Linear bifurcation load at point G with the subsequent application of semi-empirical Knock-Down-Factor (KDF).
This is the NASA-SP8007 document approach. It does not include the effects of prebuckling rotations and the effect of imperfections is assumed to be accounted for by the application of the KDF.

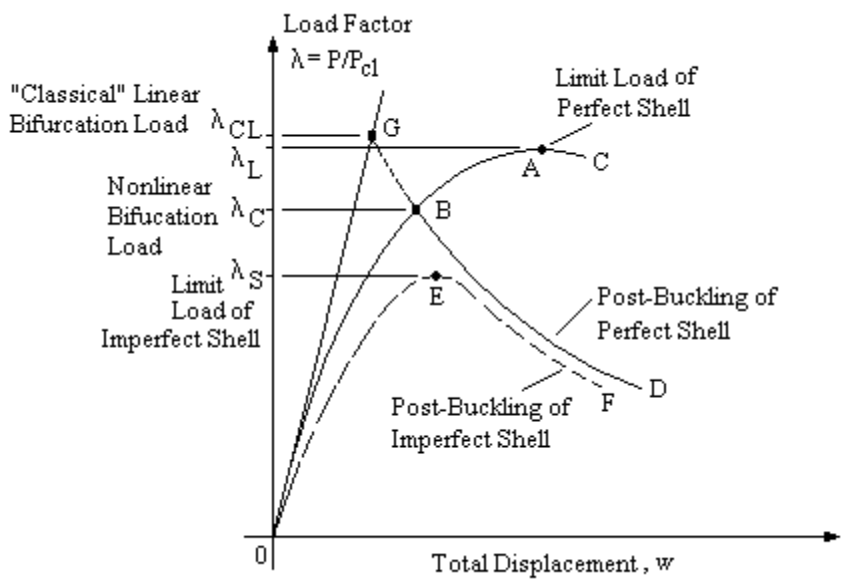

Figure 3.2.2-4. Bifurcation Points and Limit Points via Geometrically Nonlinear Analysis

The effect of prebuckling rotations may be accounted for by solving the nonlinear buckling problem, and obtaining point B, or by performing a nonlinear perfect structure analysis. This may lead to unstable behavior at point B or stable behavior at point A, which does not include the effect of imperfections. A KDF may be applied to the nonlinear bifurcation point B but may result in an overconservative design since KDF are derived to be applied to the linear bifurcation results. Point E may also be approximated by applying W.T. Koiter's asymptotic theory. This is a linear theory that includes the effects of initial imperfections in the shape of the lowest buckling mode. It originally neglected the effects of prebuckling rotations; however this theory has been extended to include prebuckling nonlinearity, and has also been found to explain the behavior of imperfection-sensitive structures even if the prebuckling rotations are effective. Point E may be also approximated by a Finite Element geometrically nonlinear analysis that follows path OE and includes initial imperfections with the shape of the lowest buckling modes and of a magnitude that can be related to an empirical KDF.

To identify critical cases, a point-by-point analysis is performed. This point-by-point analysis uses both NASA SP8007 and W.T. Koiter's asymptotic theory and assumes local conditions of loading from the FE model and that the local geometry is the same everywhere in the cylinder. This analysis is applied to all elements in the model and for every load condition.

The point-by-point analysis is performed for all cases for both local and general modes of failure. It accounts for interaction of axial compression, hydrostatic pressure and shear at both, the local and general level. It also accounts for the effects of eccentricity, and uses the geometry and results from a FE model where the stiffener rings have been "smeared" out. It does not account for possible interaction between local and general stability failure modes.

The point-by-point analysis corresponds to computing the classical linear elastic bifurcation buckling load followed by the application of a Knock-Down-Factor per NASA SP-8007, to approximate point E, or to the analytical determination of the limit point load at point E per W.T. Koiter's asymptotic theory. Note that a thickness of $1.05*t_{min}$ or $t_{nominal}$ - whichever is less - is used in all stability computations, and t_{min} is used in all strength calculation.

A margin of safety summary from the point-by-point analysis is presented in Table 3.2.2-1. Note that a safety factor of 1.4 is used on all loads, pressure, misalignment, strap preload, and inertia. The key to the Margin of Safety types is as follows :

Type Failure Mode

1) Skin stability at ULTIMATE load
2) General stability at ULTIMATE load
3) Rib stability at ULTIMATE load
4) Skin maximum principal stress - YIELD
5) Skin minimum principal stress - YIELD
6) Skin maximum shear stress - YIELD
7) Skin maximum principal stress - ULTIMATE
8) Skin minimum principal stress - ULTIMATE
9) Skin maximum shear stress - ULTIMATE
10) Axial rib lesser of YIELD or ULTIMATE combined stress (does not apply for Outer Cylinder)
11) Circumferential rib lesser of YIELD or ULTIMATE combined stress

The margins of safety shown in Table 3.2.2-1 represent the minimum margin of safety for any failure mode type and load case.

Table 3.2.2-1 Point-by-Point Margin of Safety Summary

Ring	2	2	3	3	4	4	5	5	6	6	7	7	8	8
Ang/Sta	**0.76**	**2.28**	**3.81**	**5.35**	**6.89**	**8.43**	**9.97**	**11.51**	**13.05**	**14.59**	**16.13**	**17.67**	**19.22**	**20.76**
1.406	7.60	6.10	5.10	3.88	3.98	3.79	3.88	3.85	3.98	3.92	4.01	3.92	3.99	3.88
4.219	7.65	6.12	5.01	3.84	3.96	3.80	3.90	3.87	3.99	3.92	3.99	3.88	3.93	3.82
7.031	7.26	6.08	4.91	3.79	3.95	3.82	3.94	3.91	4.01	3.92	3.98	3.85	3.67	3.61
9.844	7.84	5.88	4.84	3.80	3.98	3.85	3.95	3.91	4.00	3.90	3.94	3.80	3.31	3.24
12.656	8.13	5.47	4.71	3.81	4.04	3.86	3.92	3.87	3.60	3.45	2.92	2.87	2.51	2.52
15.469	7.34	5.13	4.48	3.74	3.81	3.60	3.14	3.02	2.51	2.49	2.15	2.16	1.90	1.94
18.281	6.99	5.17	4.20	3.63	2.67	2.57	2.10	2.12	1.81	1.88	1.66	1.73	1.53	1.59
21.094	3.39	2.98	2.06	2.06	1.62	1.71	1.47	1.59	1.40	1.52	1.38	1.49	1.34	1.40
23.906	0.95	1.37	0.97	1.22	1.07	1.27	1.16	1.33	1.22	1.38	1.26	1.36	1.18	1.17
26.719	0.46	0.97	0.72	1.02	0.95	1.19	1.12	1.33	1.21	1.35	1.24	1.25	1.05	1.05
29.531	1.13	1.35	1.13	1.38	1.24	1.45	1.31	1.48	1.35	1.40	1.18	1.20	1.00	0.95
32.344	3.96	3.29	2.37	2.37	1.93	2.05	1.74	1.73	1.42	1.42	1.15	1.11	0.90	0.87
35.156	4.73	5.43	3.90	2.86	2.21	1.88	1.72	1.63	1.28	1.25	1.02	1.01	0.83	0.83
37.969	2.25	2.72	2.08	2.07	1.65	1.56	1.28	1.27	1.02	1.04	0.86	0.90	0.76	0.80
40.781	2.65	2.10	1.38	1.40	1.06	1.11	0.90	0.96	0.79	0.85	0.72	0.79	0.69	0.76
43.594	1.00	1.25	0.88	0.96	0.72	0.80	0.64	0.73	0.61	0.69	0.61	0.70	0.64	0.74
46.406	0.98	1.02	0.65	0.73	0.54	0.63	0.51	0.61	0.51	0.61	0.54	0.64	0.59	0.69
49.219	0.68	0.78	0.51	0.64	0.48	0.59	0.49	0.59	0.50	0.59	0.52	0.62	0.57	0.68
52.031	0.43	0.72	0.56	0.73	0.58	0.70	0.57	0.67	0.56	0.65	0.57	0.66	0.60	0.70
54.844	1.94	1.62	1.12	1.18	0.91	0.97	0.79	0.85	0.71	0.78	0.67	0.75	0.67	0.75
57.656	3.31	2.84	2.11	1.72	1.43	1.39	1.09	1.11	0.92	0.97	0.83	0.89	0.78	0.84
60.469	2.01	2.10	1.83	2.16	1.85	1.75	1.41	1.41	1.16	1.19	1.01	1.06	0.92	0.96
63.281	0.84	1.16	1.06	1.42	1.39	1.71	1.70	1.76	1.47	1.49	1.27	1.29	1.11	1.12
66.094	0.85	1.20	1.06	1.39	1.30	1.59	1.52	1.72	1.70	1.81	1.61	1.60	1.37	1.36
68.906	2.44	2.51	1.88	2.04	1.71	1.89	1.70	1.87	1.72	1.87	1.74	1.88	1.73	1.69
71.719	7.60	4.41	3.86	3.16	2.62	2.56	2.16	2.22	1.94	2.03	1.83	1.92	1.76	1.84
74.531	6.70	6.53	4.56	3.74	3.78	3.35	2.86	2.77	2.33	2.34	2.05	2.10	1.89	1.95
77.344	9.55	9.40	6.31	4.78	4.63	4.20	3.62	3.42	2.84	2.78	2.41	2.41	2.15	2.19
80.156	7.93	7.47	7.36	5.59	4.91	4.57	3.77	3.62	3.07	3.01	2.63	2.62	2.35	2.38
82.969	8.03	6.91	5.59	5.39	4.52	4.43	3.82	3.78	3.31	3.29	2.91	2.91	2.62	2.64
85.781	5.39	5.60	4.80	4.98	4.38	4.45	3.98	4.04	3.62	3.64	3.27	3.28	2.97	3.00
88.594	6.49	6.92	5.52	5.22	4.78	4.85	4.55	4.65	4.04	4.05	3.68	3.69	3.36	3.38
91.406	7.30	8.01	6.33	4.62	4.71	4.60	4.80	4.82	4.54	4.54	4.12	4.10	3.74	3.73
94.219	6.95	7.67	5.27	4.01	4.25	4.22	4.44	4.51	4.76	4.70	4.48	4.42	4.01	3.96
97.031	7.16	7.20	4.68	3.51	3.83	3.92	4.16	4.26	4.52	4.53	4.38	4.30	3.84	3.83
99.844	7.85	6.50	4.48	3.32	3.59	3.68	3.95	4.01	4.12	4.01	3.47	3.44	3.06	3.10
102.656	8.93	5.96	4.75	3.51	3.67	3.59	3.68	3.64	3.14	3.10	2.72	2.75	2.48	2.56
105.469	8.51	5.48	4.58	3.87	3.68	3.45	2.83	2.80	2.40	2.46	2.20	2.29	2.10	2.21
108.281	6.48	5.09	3.44	3.17	2.43	2.44	2.07	2.17	1.93	2.06	1.90	2.04	1.91	2.05
111.094	2.45	2.41	1.78	1.93	1.62	1.81	1.63	1.83	1.70	1.89	1.80	1.98	1.77	1.76
113.906	0.87	1.21	1.05	1.38	1.28	1.56	1.51	1.77	1.72	1.80	1.55	1.56	1.34	1.35
116.719	0.81	1.14	1.06	1.43	1.41	1.74	1.65	1.66	1.38	1.39	1.18	1.20	1.03	1.06
119.531	1.94	2.08	1.86	2.21	1.76	1.68	1.31	1.31	1.07	1.08	0.91	0.94	0.81	0.85
122.344	2.76	2.44	1.77	1.63	1.18	1.16	0.91	0.95	0.78	0.83	0.71	0.75	0.65	0.70
125.156	1.51	1.26	0.85	0.91	0.68	0.75	0.60	0.68	0.56	0.64	0.56	0.63	0.54	0.61
127.969	0.32	0.57	0.34	0.49	0.38	0.50	0.41	0.51	0.43	0.52	0.46	0.55	0.48	0.56
130.781	0.19	0.37	0.23	0.38	0.29	0.41	0.34	0.45	0.38	0.48	0.43	0.52	0.46	0.55
133.594	0.59	0.65	0.41	0.52	0.38	0.49	0.40	0.49	0.41	0.50	0.43	0.52	0.47	0.57
136.406	1.08	1.11	0.71	0.78	0.57	0.65	0.51	0.60	0.49	0.58	0.49	0.57	0.51	0.60
139.219	1.82	1.76	1.19	1.22	0.91	0.96	0.76	0.81	0.65	0.71	0.59	0.65	0.56	0.63
142.031	2.89	2.90	2.07	2.02	1.50	1.45	1.10	1.09	0.85	0.87	0.71	0.75	0.63	0.68
144.844	4.68	4.61	3.30	2.77	2.12	1.87	1.46	1.39	1.09	1.07	0.87	0.88	0.73	0.75
147.656	2.86	2.45	1.77	1.84	1.54	1.68	1.48	1.56	1.28	1.31	1.06	1.05	0.86	0.86
150.469	0.82	1.02	0.85	1.10	0.99	1.21	1.14	1.35	1.26	1.39	1.19	1.22	1.03	1.01
153.281	0.38	0.84	0.61	0.91	0.85	1.10	1.05	1.27	1.21	1.39	1.29	1.35	1.15	1.16
156.094	1.00	1.21	0.98	1.23	1.09	1.31	1.21	1.42	1.32	1.49	1.38	1.49	1.32	1.31
158.906	4.21	3.37	2.30	2.27	1.82	1.92	1.67	1.80	1.61	1.74	1.58	1.65	1.48	1.54
161.719	8.73	6.05	4.81	3.81	3.20	3.05	2.48	2.47	2.10	2.15	1.89	1.93	1.70	1.72
164.531	8.76	6.21	4.72	3.79	3.81	3.60	3.67	3.44	2.81	2.74	2.35	2.35	2.04	2.03
167.344	8.52	6.39	4.70	3.74	3.88	3.74	3.85	3.87	3.71	3.53	2.98	2.92	2.53	2.50
170.156	7.11	5.86	4.61	3.75	4.00	3.91	4.06	4.09	4.30	4.33	3.82	3.72	3.24	3.19
172.969	6.67	5.05	4.55	3.82	4.15	4.07	4.25	4.31	4.46	4.40	4.50	4.39	4.16	4.11
175.781	7.51	5.59	4.68	3.94	4.29	4.21	4.32	4.30	4.45	4.39	4.50	4.38	4.47	4.35
178.594	7.16	6.25	4.94	4.06	4.40	4.19	4.29	4.28	4.44	4.38	4.49	4.38	4.46	4.34
t_nom	**0.265**	**0.265**	**0.232**	**0.232**	**0.213**	**0.213**	**0.199**	**0.199**	**0.188**	**0.188**	**0.179**	**0.179**	**0.171**	**0.171**

Table 3.2.2-1 Point-by-Point Margin of Safety Summary (Cont'd)

Ring	9	9	10	10	11	11	12	12	13	13	14	14	15	15	16	16
Ang/Sta	**22.30**	**23.84**	**25.38**	**26.92**	**28.46**	**30.00**	**31.54**	**33.08**	**34.62**	**36.16**	**37.70**	**39.24**	**40.78**	**42.32**	**43.85**	**45.37**
1.406	3.95	1.69	1.61	1.60	1.71	1.75	1.58	1.67	1.69	1.72	1.70	1.80	1.94	2.48	3.74	8.36
4.219	3.57	3.55	1.62	1.60	1.72	1.74	1.59	1.67	1.69	1.75	1.72	1.83	1.93	2.45	3.76	8.18
7.031	3.15	3.12	2.80	2.81	2.58	1.75	1.61	1.69	1.72	1.78	1.76	1.88	1.96	2.49	3.76	8.28
9.844	2.82	2.81	2.52	2.54	2.34	2.40	2.69	2.82	3.19	3.18	3.04	3.05	3.01	3.78	5.75	9.39
12.656	2.23	2.27	2.08	2.15	2.03	2.15	2.45	2.59	2.95	2.98	2.91	3.03	3.12	3.89	5.83	13.09
15.469	1.71	1.76	1.60	1.66	1.54	1.56	1.72	1.77	2.07	2.20	2.71	2.90	3.24	4.35	4.94	5.98
18.281	1.41	1.46	1.25	1.23	1.04	1.02	1.10	1.09	1.27	1.29	1.72	1.87	2.76	3.25	5.36	5.99
21.094	1.16	1.13	0.93	0.88	0.71	0.66	0.70	0.66	0.75	0.71	0.96	0.98	1.48	1.55	2.91	2.20
23.906	0.95	0.92	0.73	0.66	0.49	0.43	0.45	0.39	0.45	0.38	0.51	0.44	0.65	0.54	1.08	0.91
26.719	0.84	0.78	0.58	0.53	0.37	0.31	0.33	0.27	0.31	0.23	0.32	0.21	0.34	0.19	0.54	0.27
29.531	0.73	0.69	0.52	0.47	0.33	0.28	0.30	0.25	0.29	0.22	0.31	0.21	0.36	0.25	0.76	0.74
32.344	0.68	0.66	0.51	0.48	0.36	0.33	0.37	0.33	0.40	0.35	0.50	0.42	0.64	0.57	1.32	1.37
35.156	0.67	0.68	0.56	0.56	0.46	0.46	0.55	0.54	0.67	0.67	0.93	0.94	1.39	1.41	2.54	2.63
37.969	0.67	0.72	0.63	0.68	0.61	0.67	0.83	0.90	1.15	1.27	1.44	1.56	1.97	2.77	2.37	3.40
40.781	0.67	0.75	0.70	0.80	0.79	0.92	1.20	1.41	1.54	1.54	1.49	1.69	1.92	2.50	2.62	3.94
43.594	0.68	0.81	0.79	0.95	1.00	1.16	1.42	1.52	1.54	1.57	1.53	1.66	1.91	2.59	3.11	4.59
46.406	0.65	0.78	0.79	0.93	0.88	0.96	1.17	1.28	1.54	1.58	1.54	1.67	1.91	2.49	3.56	3.65
49.219	0.63	0.76	0.75	0.79	0.72	0.77	0.94	1.01	1.28	1.37	1.52	1.63	1.82	1.58	2.42	1.68
52.031	0.64	0.75	0.67	0.69	0.60	0.62	0.75	0.79	1.01	1.08	1.50	1.50	1.76	1.66	2.56	2.22
54.844	0.67	0.75	0.62	0.62	0.51	0.51	0.60	0.62	0.78	0.83	1.20	1.33	1.83	2.22	4.02	4.80
57.656	0.73	0.77	0.61	0.59	0.46	0.43	0.50	0.48	0.60	0.59	0.86	0.91	1.45	1.67	3.51	4.77
60.469	0.82	0.83	0.64	0.59	0.44	0.40	0.43	0.39	0.46	0.41	0.57	0.51	0.79	0.75	1.56	1.92
63.281	0.95	0.93	0.71	0.65	0.47	0.41	0.43	0.35	0.39	0.30	0.40	0.29	0.43	0.28	0.68	0.46
66.094	1.14	1.09	0.84	0.76	0.56	0.48	0.48	0.40	0.42	0.32	0.40	0.28	0.39	0.23	0.59	0.35
68.906	1.42	1.32	1.03	0.93	0.71	0.63	0.63	0.54	0.57	0.48	0.60	0.49	0.69	0.59	1.21	1.17
71.719	1.68	1.64	1.32	1.20	0.96	0.87	0.89	0.81	0.88	0.81	1.03	0.99	1.42	1.49	2.79	3.19
74.531	1.76	1.83	1.68	1.61	1.35	1.27	1.32	1.26	1.41	1.39	1.79	1.86	2.59	2.83	4.54	4.66
77.344	1.96	2.02	1.86	1.92	1.81	1.86	1.97	1.96	2.21	2.28	2.80	2.92	3.58	3.43	4.41	4.13
80.156	2.15	2.20	2.06	2.13	2.03	2.12	2.36	2.47	2.80	2.92	3.37	3.48	3.73	4.30	5.28	5.02
82.969	2.40	2.46	2.30	2.38	2.29	2.40	2.68	2.82	3.21	3.21	3.35	3.42	3.69	4.18	3.62	5.51
85.781	2.73	2.79	2.61	2.69	2.59	2.72	3.02	3.17	3.61	3.45	3.24	3.23	3.34	4.16	6.18	5.92
88.594	3.09	3.13	2.93	3.01	2.89	3.00	3.31	3.45	3.69	3.52	3.17	3.06	3.02	3.93	6.10	5.41
91.406	3.39	3.40	3.16	3.21	3.05	3.14	3.42	3.55	3.81	3.60	3.20	1.63	1.70	2.05	2.83	4.37
94.219	3.58	3.55	3.27	3.27	3.07	3.11	3.35	3.43	3.82	3.80	3.37	3.22	3.18	1.97	2.35	3.16
97.031	3.45	3.51	3.22	3.18	2.94	2.93	3.12	3.16	3.52	3.64	3.76	3.74	4.03	5.15	6.49	3.14
99.844	2.82	2.91	2.75	2.89	2.74	2.69	2.84	2.84	3.15	3.24	3.98	4.31	4.84	5.14	6.35	2.11
102.656	2.35	2.46	2.34	2.49	2.36	2.37	2.52	2.49	2.74	2.75	3.32	3.52	3.78	4.26	4.61	4.40
105.469	2.05	2.17	1.89	1.81	1.56	1.52	1.64	1.65	1.92	1.95	2.37	2.40	2.23	3.00	3.19	3.58
108.281	1.81	1.71	1.40	1.32	1.09	1.02	1.08	1.03	1.18	1.18	1.57	1.51	1.97	1.89	2.40	2.64
111.094	1.47	1.38	1.11	1.02	0.81	0.73	0.76	0.69	0.76	0.69	0.89	0.86	1.25	1.12	2.00	1.84
113.906	1.15	1.15	0.93	0.86	0.66	0.59	0.60	0.51	0.55	0.45	0.56	0.45	0.62	0.48	1.00	0.86
116.719	0.90	0.92	0.79	0.79	0.61	0.54	0.56	0.48	0.51	0.40	0.49	0.35	0.46	0.27	0.84	0.35
119.531	0.72	0.76	0.66	0.70	0.63	0.59	0.63	0.57	0.63	0.55	0.68	0.56	0.75	0.60	1.17	1.08
122.344	0.60	0.66	0.59	0.65	0.60	0.67	0.80	0.79	0.93	0.92	1.21	1.21	1.72	1.86	3.47	2.89
125.156	0.53	0.60	0.55	0.64	0.62	0.72	0.94	1.09	1.41	1.58	2.25	2.55	3.05	3.92	1.17	0.82
127.969	0.49	0.58	0.55	0.65	0.66	0.79	1.07	1.29	1.79	2.21	2.97	3.01	2.97	1.78	1.31	0.78
130.781	0.49	0.59	0.57	0.69	0.71	0.88	1.21	1.49	1.98	2.31	2.97	3.08	1.74	1.85	1.67	1.13
133.594	0.52	0.62	0.60	0.73	0.76	0.94	1.30	1.46	1.79	1.92	2.52	2.57	1.75	2.05	2.39	2.54
136.406	0.54	0.63	0.60	0.72	0.74	0.91	1.24	1.31	1.53	1.53	1.41	1.52	1.79	1.91	3.04	2.95
139.219	0.55	0.63	0.58	0.68	0.67	0.79	1.05	1.19	1.35	1.30	1.45	1.40	1.71	1.47	2.33	1.95
142.031	0.57	0.62	0.54	0.60	0.56	0.63	0.79	0.88	1.13	1.24	1.52	1.46	1.88	1.76	2.94	2.74
144.844	0.61	0.63	0.53	0.55	0.46	0.48	0.58	0.57	0.70	0.70	0.97	1.02	1.54	1.74	3.55	4.50
147.656	0.69	0.68	0.54	0.53	0.41	0.39	0.44	0.38	0.44	0.38	0.53	0.47	0.76	0.78	1.80	2.43
150.469	0.80	0.76	0.59	0.55	0.40	0.36	0.38	0.30	0.32	0.23	0.31	0.21	0.35	0.23	0.66	0.54
153.281	0.94	0.89	0.68	0.62	0.46	0.39	0.40	0.31	0.33	0.22	0.29	0.17	0.27	0.11	0.41	0.16
156.094	1.09	1.06	0.83	0.76	0.57	0.51	0.51	0.42	0.45	0.35	0.46	0.35	0.52	0.39	0.88	0.74
158.906	1.28	1.25	1.04	0.98	0.78	0.71	0.73	0.65	0.72	0.66	0.86	0.82	1.22	1.25	2.43	2.70
161.719	1.50	1.52	1.30	1.26	1.05	1.00	1.07	1.03	1.18	1.18	1.55	1.64	2.41	2.74	5.23	5.86
164.531	1.76	1.77	1.57	1.59	1.43	1.40	1.53	1.55	1.82	1.93	2.57	2.86	3.57	4.17	5.31	4.88
167.344	2.16	2.16	1.92	1.95	1.79	1.85	2.10	2.23	2.70	2.97	3.47	3.51	3.45	3.97	5.12	9.69
170.156	2.77	2.75	2.46	2.49	2.30	2.38	2.68	2.83	3.39	3.68	3.62	3.53	3.32	3.77	4.53	4.38
172.969	3.59	3.56	3.19	3.21	2.96	3.02	3.34	3.47	4.02	4.08	3.75	3.60	3.34	3.63	4.06	8.36
175.781	4.44	4.39	4.00	3.98	3.65	3.67	3.97	4.01	4.33	4.19	3.84	3.70	3.46	3.77	4.27	8.02
178.594	4.42	4.35	4.22	4.15	4.16	4.22	4.09	4.22	4.20	4.23	3.88	3.78	3.60	4.12	4.82	8.37
t_nom	**0.163**	**0.163**	**0.157**	**0.157**	**0.152**	**0.152**	**0.156**	**0.156**	**0.162**	**0.162**	**0.174**	**0.174**	**0.196**	**0.196**	**0.232**	**0.232**

Table 3.2.2-1 Point-by-Point Margin of Safety Summary (Con'd)

Ring	2	2	3	3	4	4	5	5	6	6	7	7	8	8
Ang/Sta	**0.76**	**2.28**	**3.81**	**5.35**	**6.89**	**8.43**	**9.97**	**11.51**	**13.05**	**14.59**	**16.13**	**17.67**	**19.22**	**20.76**
181.406	7.31	6.17	5.04	4.09	4.29	4.12	4.24	4.23	4.39	4.33	4.44	4.33	4.41	4.29
184.219	9.58	5.94	4.79	3.90	4.12	4.00	4.15	4.15	4.31	4.25	4.35	4.25	4.32	4.21
187.031	10.01	6.12	4.30	3.26	3.67	3.84	4.06	4.07	4.22	4.15	4.25	4.14	4.21	4.10
189.844	9.81	6.17	4.11	3.06	3.42	3.67	3.98	3.98	4.11	4.04	4.13	4.03	3.59	3.48
192.656	10.05	6.10	4.43	3.27	3.56	3.67	3.80	3.79	3.84	3.67	3.10	3.03	2.61	2.56
195.469	10.26	6.05	4.67	3.64	3.74	3.55	3.22	3.10	2.58	2.56	2.22	2.24	1.95	1.95
198.281	8.33	6.15	3.92	3.49	2.60	2.52	2.06	2.10	1.80	1.88	1.67	1.74	1.54	1.58
201.094	2.80	2.58	1.85	1.90	1.52	1.62	1.40	1.53	1.36	1.49	1.36	1.45	1.31	1.38
203.906	0.97	1.16	0.92	1.14	0.99	1.18	1.07	1.25	1.15	1.32	1.22	1.34	1.23	1.28
206.719	0.50	0.80	0.68	0.95	0.86	1.08	1.01	1.21	1.14	1.32	1.23	1.36	1.17	1.18
209.531	0.99	1.21	1.00	1.24	1.11	1.32	1.23	1.43	1.34	1.48	1.28	1.32	1.14	1.12
212.344	3.18	2.78	2.06	2.16	1.84	2.00	1.76	1.78	1.49	1.53	1.26	1.25	1.04	1.03
215.156	5.49	5.39	3.86	2.65	2.23	1.93	1.78	1.72	1.37	1.36	1.12	1.13	0.95	0.97
217.969	2.62	3.05	2.32	2.00	1.75	1.58	1.46	1.46	1.18	1.20	1.00	1.04	0.89	0.94
220.781	2.85	2.41	1.64	1.68	1.30	1.36	1.11	1.16	0.96	1.02	0.87	0.93	0.82	0.89
223.594	1.36	1.63	1.18	1.27	0.98	1.06	0.88	0.96	0.81	0.90	0.79	0.87	0.78	0.86
226.406	1.37	1.39	0.91	1.00	0.77	0.87	0.73	0.83	0.71	0.80	0.71	0.81	0.73	0.83
229.219	0.70	0.86	0.62	0.77	0.62	0.75	0.64	0.76	0.66	0.76	0.68	0.78	0.71	0.82
232.031	0.44	0.90	0.60	0.81	0.67	0.81	0.69	0.80	0.69	0.80	0.71	0.81	0.74	0.84
234.844	1.84	1.60	1.14	1.23	0.97	1.06	0.88	0.97	0.83	0.92	0.81	0.91	0.82	0.90
237.656	2.47	2.25	1.72	1.45	1.35	1.31	1.22	1.26	1.06	1.13	1.00	1.07	0.96	1.02
240.469	2.11	2.22	2.00	2.37	2.17	2.07	1.66	1.67	1.41	1.45	1.27	1.32	1.18	1.21
243.281	0.93	1.28	1.18	1.54	1.52	1.87	1.89	1.90	1.84	1.87	1.62	1.64	1.42	1.44
246.094	0.99	1.30	1.10	1.40	1.31	1.59	1.54	1.77	1.77	1.88	1.98	2.00	1.71	1.61
248.906	2.10	2.16	1.61	1.78	1.52	1.71	1.56	1.75	1.64	1.82	1.73	1.90	1.80	1.77
251.719	4.24	3.95	2.75	2.69	2.13	2.19	1.87	1.96	1.75	1.86	1.71	1.82	1.70	1.80
254.531	6.74	5.93	4.03	3.61	3.18	3.02	2.45	2.42	2.06	2.09	1.86	1.92	1.75	1.83
257.344	11.82	7.01	5.26	4.32	4.28	3.93	3.25	3.08	2.56	2.51	2.17	2.19	1.96	2.01
260.156	6.62	5.75	6.55	4.70	4.59	4.22	4.07	3.84	3.20	3.08	2.65	2.61	2.31	2.33
262.969	6.40	6.95	6.46	4.89	4.74	4.42	4.48	4.44	3.88	3.74	3.25	3.17	2.80	2.78
265.781	7.90	8.49	7.01	4.99	4.79	4.44	4.53	4.57	4.49	4.38	3.88	3.80	3.38	3.32
268.594	5.77	3.61	6.47	5.01	4.75	4.37	4.45	4.50	4.75	4.76	4.39	4.33	3.87	3.81
271.406	5.12	5.86	5.90	4.83	4.61	4.28	4.38	4.43	4.68	4.70	4.34	4.32	3.89	3.89
274.219	5.53	7.13	6.66	4.66	4.48	4.19	4.31	4.37	4.52	4.47	3.96	3.94	3.53	3.54
277.031	5.65	4.86	6.34	4.50	4.37	4.12	4.26	4.31	4.13	4.06	3.56	3.53	3.16	3.18
279.844	6.65	7.11	6.28	4.34	4.28	4.07	4.21	4.24	3.73	3.65	3.18	3.16	2.83	2.86
282.656	6.22	6.40	5.35	4.25	4.25	3.94	3.91	3.78	3.27	3.21	2.78	2.80	2.50	2.55
285.469	6.74	6.02	4.78	4.02	3.89	3.47	3.07	3.01	2.55	2.59	2.29	2.36	2.14	2.22
288.281	5.56	4.93	3.59	3.37	2.60	2.62	2.22	2.31	2.04	2.16	1.97	2.09	1.92	1.92
291.094	2.37	2.35	1.77	1.96	1.67	1.88	1.70	1.90	1.75	1.93	1.73	1.71	1.47	1.46
293.906	0.88	1.21	1.06	1.39	1.30	1.58	1.52	1.77	1.51	1.51	1.28	1.28	1.10	1.11
296.719	0.85	1.19	1.09	1.45	1.40	1.71	1.37	1.36	1.11	1.12	0.94	0.96	0.82	0.85
299.531	2.05	2.19	1.91	1.96	1.39	1.32	1.01	1.01	0.80	0.83	0.68	0.72	0.61	0.66
302.344	2.89	2.52	1.54	1.38	0.95	0.93	0.70	0.72	0.56	0.61	0.50	0.55	0.46	0.51
305.156	1.21	1.01	0.65	0.71	0.51	0.57	0.43	0.49	0.37	0.43	0.35	0.41	0.35	0.41
307.969	**0.11**	0.35	0.23	0.37	0.26	0.35	0.26	0.33	0.25	0.32	0.26	0.33	0.28	0.35
310.781	0.33	0.41	0.20	0.30	0.18	0.28	0.19	0.28	0.20	0.28	0.22	0.30	0.25	0.33
313.594	0.59	0.62	0.32	0.39	0.24	0.32	0.23	0.30	0.22	0.30	0.24	0.31	0.26	0.34
316.406	0.63	0.85	0.55	0.62	0.42	0.48	0.35	0.42	0.32	0.38	0.31	0.38	0.32	0.39
319.219	2.36	1.77	1.10	1.08	0.77	0.80	0.60	0.64	0.50	0.55	0.44	0.49	0.40	0.45
322.031	2.30	2.67	1.91	1.86	1.36	1.32	1.01	0.99	0.76	0.77	0.60	0.63	0.50	0.53
324.844	5.37	5.33	3.68	2.81	2.19	1.90	1.48	1.39	1.06	1.02	0.80	0.79	0.63	0.63
327.656	3.16	2.79	2.10	2.19	1.77	1.86	1.56	1.54	1.24	1.24	0.99	0.96	0.76	0.73
330.469	0.98	1.20	1.01	1.26	1.14	1.36	1.23	1.38	1.24	1.30	1.08	1.09	0.91	0.88
333.281	0.49	0.97	0.70	0.98	0.90	1.13	1.06	1.26	1.16	1.29	1.18	1.21	1.02	1.01
336.094	1.00	1.21	0.98	1.21	1.05	1.24	1.12	1.29	1.18	1.34	1.24	1.34	1.19	1.19
338.906	3.34	2.96	2.05	2.04	1.61	1.69	1.45	1.57	1.39	1.52	1.38	1.49	1.35	1.43
341.719	7.48	5.22	4.12	3.60	2.66	2.57	2.10	2.13	1.83	1.90	1.69	1.76	1.58	1.65
344.531	8.03	5.16	4.50	3.73	3.87	3.71	3.19	3.09	2.58	2.57	2.23	2.25	1.99	2.04
347.344	8.80	5.63	4.61	3.77	4.00	3.88	3.99	3.98	3.77	3.62	3.07	3.03	2.65	2.67
350.156	8.69	6.12	4.73	3.66	3.90	3.83	3.98	3.98	4.11	4.05	4.12	4.00	3.64	3.58
352.969	7.93	6.29	4.76	3.67	3.86	3.78	3.94	3.94	4.08	4.02	4.10	4.00	4.06	3.95
355.781	7.40	6.29	4.89	3.76	3.90	3.77	3.89	3.89	4.03	3.98	4.07	3.98	4.05	3.95
358.594	8.35	6.18	5.05	3.86	3.96	3.79	3.88	3.86	4.00	3.95	4.05	3.96	4.03	3.93
t_nom	**0.265**	**0.265**	**0.232**	**0.232**	**0.213**	**0.213**	**0.199**	**0.199**	**0.188**	**0.188**	**0.179**	**0.179**	**0.171**	**0.171**

Table 3.2.2-1 Point-by-Point Margin of Safety Summary (Con'd)

Ring	9	9	10	10	11	11	12	12	13	13	14	14	15	15	16	16
Ang/Sta	**22.30**	**23.84**	**25.38**	**26.92**	**28.46**	**30.00**	**31.54**	**33.08**	**34.62**	**36.16**	**37.70**	**39.24**	**40.78**	**42.32**	**43.85**	**45.37**
181.406	4.37	4.29	4.16	4.08	4.08	4.10	3.98	1.75	1.76	1.81	1.75	3.76	3.72	4.51	5.47	8.69
184.219	4.28	4.21	4.09	4.01	3.79	3.81	3.92	4.02	3.96	1.80	1.77	3.56	3.36	4.40	6.60	9.59
187.031	3.95	3.84	3.39	3.36	3.07	3.11	3.40	3.49	3.97	3.90	3.63	3.50	3.25	3.31	7.52	4.09
189.844	2.98	2.93	2.60	2.60	2.39	2.45	2.73	2.86	3.38	3.61	3.45	3.46	3.27	4.35	6.50	11.16
192.656	2.20	2.18	1.93	1.94	1.77	1.81	2.05	2.15	2.59	2.83	3.21	3.29	3.37	4.13	5.29	11.41
195.469	1.69	1.70	1.49	1.51	1.35	1.38	1.54	1.54	1.80	1.88	2.50	2.80	3.28	3.98	4.88	8.58
198.281	1.37	1.40	1.23	1.22	1.01	0.96	1.01	0.97	1.10	1.09	1.44	1.53	2.29	2.66	5.09	6.52
201.094	1.21	1.20	1.00	0.95	0.76	0.69	0.71	0.64	0.70	0.63	0.82	0.78	1.13	1.13	2.16	2.29
203.906	1.06	1.04	0.84	0.79	0.60	0.53	0.53	0.43	0.46	0.36	0.47	0.37	0.54	0.40	0.88	0.72
206.719	0.98	0.95	0.74	0.68	0.51	0.45	0.45	0.36	0.38	0.27	0.35	0.23	0.34	0.17	0.50	0.25
209.531	0.90	0.87	0.69	0.65	0.50	0.45	0.47	0.39	0.42	0.32	0.42	0.31	0.47	0.34	0.81	0.66
212.344	0.84	0.83	0.68	0.67	0.55	0.53	0.57	0.52	0.59	0.53	0.71	0.65	0.97	0.99	2.12	2.85
215.156	0.81	0.83	0.72	0.74	0.66	0.66	0.76	0.76	0.93	0.95	1.29	1.36	1.92	2.25	4.41	5.12
217.969	0.81	0.86	0.77	0.83	0.77	0.83	1.02	1.12	1.45	1.54	1.53	1.68	1.94	2.66	4.29	4.67
220.781	0.79	0.87	0.80	0.91	0.89	1.02	1.31	1.41	1.42	1.45	1.45	1.60	1.84	2.34	3.53	3.80
223.594	0.78	0.88	0.84	0.97	0.98	1.16	1.33	1.37	1.37	1.40	1.40	1.53	1.74	2.13	2.80	4.61
226.406	0.76	0.88	0.85	0.99	1.01	1.20	1.36	1.41	1.41	1.41	1.41	1.52	1.70	1.95	2.16	2.11
229.219	0.74	0.84	0.80	0.92	0.93	1.08	1.38	1.43	1.45	1.48	1.62	3.31	3.50	2.64	2.45	1.53
232.031	0.75	0.83	0.77	0.87	0.84	0.95	1.20	1.35	1.43	1.46	2.72	1.65	2.24	3.41	5.17	3.43
234.844	0.79	0.85	0.77	0.84	0.78	0.85	1.01	1.03	1.26	1.35	1.91	2.26	3.46	3.60	4.39	2.77
237.656	0.88	0.92	0.81	0.85	0.74	0.70	0.75	0.71	0.81	0.77	1.00	0.97	1.40	1.47	1.73	2.20
240.469	1.02	1.04	0.89	0.82	0.63	0.56	0.58	0.50	0.54	0.43	0.53	0.40	0.53	0.34	0.91	0.51
243.281	1.21	1.12	0.87	0.79	0.59	0.51	0.51	0.42	0.43	0.32	0.39	0.24	0.34	0.16	0.66	0.27
246.094	1.28	1.18	0.92	0.83	0.63	0.55	0.55	0.46	0.48	0.38	0.49	0.38	0.55	0.42	1.17	0.94
248.906	1.42	1.32	1.05	0.96	0.75	0.68	0.70	0.62	0.69	0.63	0.83	0.81	1.20	1.08	1.86	1.67
251.719	1.67	1.57	1.29	1.20	0.99	0.93	0.99	0.95	1.09	1.09	1.47	1.55	1.84	1.86	2.39	2.21
254.531	1.68	1.77	1.63	1.58	1.39	1.36	1.47	1.49	1.74	1.85	2.45	2.44	2.14	2.93	3.17	3.31
257.344	1.82	1.90	1.78	1.89	1.84	1.94	2.18	2.29	2.72	2.97	3.11	3.35	3.56	4.16	4.89	4.72
260.156	2.09	2.15	2.01	2.10	2.02	2.15	2.46	2.63	3.09	3.30	3.85	4.18	4.65	4.59	5.90	2.42
262.969	2.49	2.51	2.32	2.38	2.26	2.34	2.60	2.69	3.03	3.09	3.64	3.60	4.19	3.87	2.70	3.14
265.781	2.96	2.95	2.69	2.70	2.51	2.53	2.72	2.72	2.96	2.90	3.26	3.07	1.79	1.99	2.76	3.95
268.594	3.39	3.35	3.04	2.99	2.73	2.69	2.82	2.73	2.88	2.75	3.04	1.62	1.66	2.03	2.90	3.49
271.406	3.51	3.55	3.29	3.20	2.89	2.80	2.86	2.74	2.86	2.73	3.06	2.94	1.85	2.27	3.15	4.49
274.219	3.20	3.25	3.03	3.11	2.82	2.74	2.84	2.76	2.90	2.80	3.19	3.17	3.95	4.29	7.22	5.28
277.031	2.87	2.93	2.73	2.82	2.63	2.58	2.70	2.67	2.89	2.88	3.34	3.31	3.97	3.80	4.90	3.89
279.844	2.58	2.64	2.46	2.54	2.39	2.37	2.52	2.52	2.79	2.82	3.34	3.37	3.95	3.76	4.56	4.32
282.656	2.29	2.36	2.17	2.24	2.10	2.11	2.24	2.26	2.52	2.60	3.15	3.30	3.88	4.30	5.61	5.34
285.469	2.01	2.09	1.86	1.81	1.53	1.44	1.51	1.44	1.61	1.60	2.05	2.14	3.01	3.35	5.58	5.77
288.281	1.65	1.61	1.36	1.26	1.02	0.94	0.96	0.88	0.96	0.89	1.13	1.09	1.56	1.64	3.13	3.61
291.094	1.24	1.22	0.98	0.90	0.70	0.62	0.64	0.56	0.60	0.51	0.63	0.53	0.74	0.63	1.31	1.29
293.906	0.93	0.93	0.72	0.66	0.49	0.43	0.45	0.38	0.42	0.32	0.42	0.29	0.41	0.24	0.60	0.37
296.719	0.71	0.71	0.54	0.50	0.36	0.32	0.36	0.31	0.36	0.29	0.40	0.30	0.44	0.28	0.66	0.43
299.531	0.55	0.57	0.43	0.41	0.29	0.27	0.32	0.30	0.39	0.36	0.54	0.51	0.81	0.79	1.60	1.67
302.344	0.43	0.48	0.36	0.36	0.26	0.26	0.34	0.34	0.47	0.49	0.77	0.86	1.45	1.81	3.62	3.92
305.156	0.35	0.42	0.33	0.34	0.27	0.28	0.38	0.41	0.58	0.64	1.00	1.14	1.60	1.91	2.63	2.65
307.969	0.30	0.38	0.33	0.36	0.30	0.33	0.45	0.50	0.69	0.77	1.16	1.23	1.48	1.53	2.41	2.08
310.781	0.29	0.37	0.36	0.41	0.35	0.40	0.53	0.60	0.81	0.90	1.29	1.32	1.61	1.54	2.50	1.90
313.594	0.30	0.38	0.37	0.48	0.43	0.49	0.64	0.72	0.95	1.05	1.49	1.58	1.79	2.22	2.81	4.05
316.406	0.33	0.41	0.38	0.48	0.48	0.60	0.77	0.85	1.11	1.21	1.57	1.71	1.99	2.43	2.70	3.79
319.219	0.37	0.42	0.37	0.43	0.40	0.47	0.63	0.72	0.98	1.08	1.52	1.60	2.18	2.07	2.56	2.49
322.031	0.42	0.44	0.36	0.39	0.32	0.35	0.45	0.48	0.64	0.67	0.96	1.00	1.47	1.48	2.43	2.07
324.844	0.48	0.48	0.37	0.37	0.27	0.27	0.33	0.32	0.42	0.41	0.62	0.63	1.04	1.14	2.52	2.42
327.656	0.55	0.53	0.39	0.37	0.25	0.23	0.26	0.23	0.29	0.25	0.40	0.36	0.63	0.65	1.68	2.30
330.469	0.67	0.63	0.46	0.42	0.29	0.24	0.27	0.22	0.27	0.21	0.31	0.22	0.38	0.27	0.76	0.68
333.281	0.81	0.78	0.59	0.54	0.38	0.33	0.36	0.30	0.35	0.28	0.37	0.27	0.39	0.23	0.57	0.29
336.094	0.97	0.95	0.76	0.73	0.56	0.51	0.55	0.50	0.57	0.50	0.65	0.57	0.81	0.70	1.33	1.18
338.906	1.22	1.20	1.00	0.97	0.81	0.78	0.86	0.83	0.95	0.93	1.22	1.25	1.85	2.01	3.56	2.81
341.719	1.48	1.54	1.35	1.34	1.18	1.17	1.29	1.31	1.54	1.60	2.11	2.31	3.30	3.76	6.79	6.62
344.531	1.82	1.88	1.72	1.80	1.66	1.69	1.89	1.97	2.34	2.52	2.98	3.19	3.56	4.73	6.17	4.76
347.344	2.37	2.42	2.22	2.31	2.19	2.31	2.63	2.79	3.23	3.25	3.13	3.20	3.20	4.06	6.76	2.46
350.156	3.13	3.13	2.83	2.88	2.68	2.77	3.13	3.31	3.45	3.41	3.20	3.12	2.97	3.57	3.93	2.38
352.969	3.49	3.48	3.13	3.17	2.94	3.03	3.38	3.53	3.60	3.51	3.22	3.07	2.88	3.31	4.22	9.38
355.781	3.86	3.84	3.46	3.47	1.74	1.77	1.62	1.69	1.68	1.71	3.22	3.07	2.88	3.31	4.33	10.86
358.594	4.01	3.95	1.62	1.60	1.71	1.73	1.59	1.67	1.68	1.73	1.70	1.84	2.07	2.74	4.07	5.60
t_nom	**0.163**	**0.163**	**0.157**	**0.157**	**0.152**	**0.152**	**0.156**	**0.156**	**0.162**	**0.162**	**0.174**	**0.174**	**0.196**	**0.196**	**0.232**	**0.232**

Finite Element Analysis

Once the critical cases are identified using the point-by-point analysis, a nonlinear FE analysis is performed for these cases. At this level, the stiffeners are modeled as discrete elements. The internal loads are obtained from nonlinear runs that follow specified loading sequences. The two critical cases identified by the Point-by-Point analysis are load case 2031 and load case 2063.

Both nonlinear perfect and nonlinear geometrically imperfect structure analyses are performed using the FE approach. The imperfect structure includes imperfections in the shape of the +/- lowest buckling modes of the critical cases and with amplitudes typical of cylinders with a KDF corresponding to a structure with equivalent R/t ratio. The refined mesh used was determined as that capable to model a half-wave between stiffener rings. This analysis represents path OE in Figure 1. The mechanical loads were increased until a Factor of Safety of 2.0 was attained. No unstable points were encountered, and the stresses computed remain within acceptable linear limits, the structure is then deemed stable and safe.

The following Figures summarize the Finite Element nonlinear analysis for the two critical cases treated. This analysis is based on 6-02 loads.

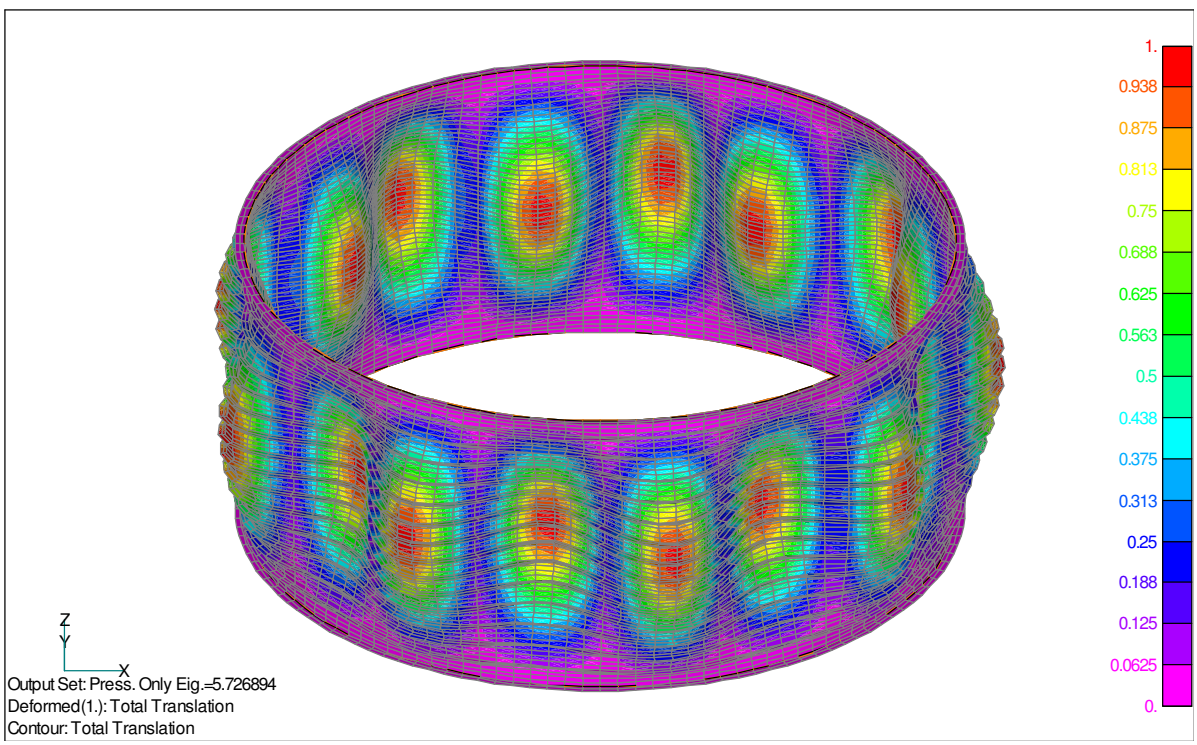

Figure 3.2.2-2. Eigenshape for Outer Cylinder refined model. Pressure only case, $\lambda = 5.726894$. Other structure removed from picture for clarity.

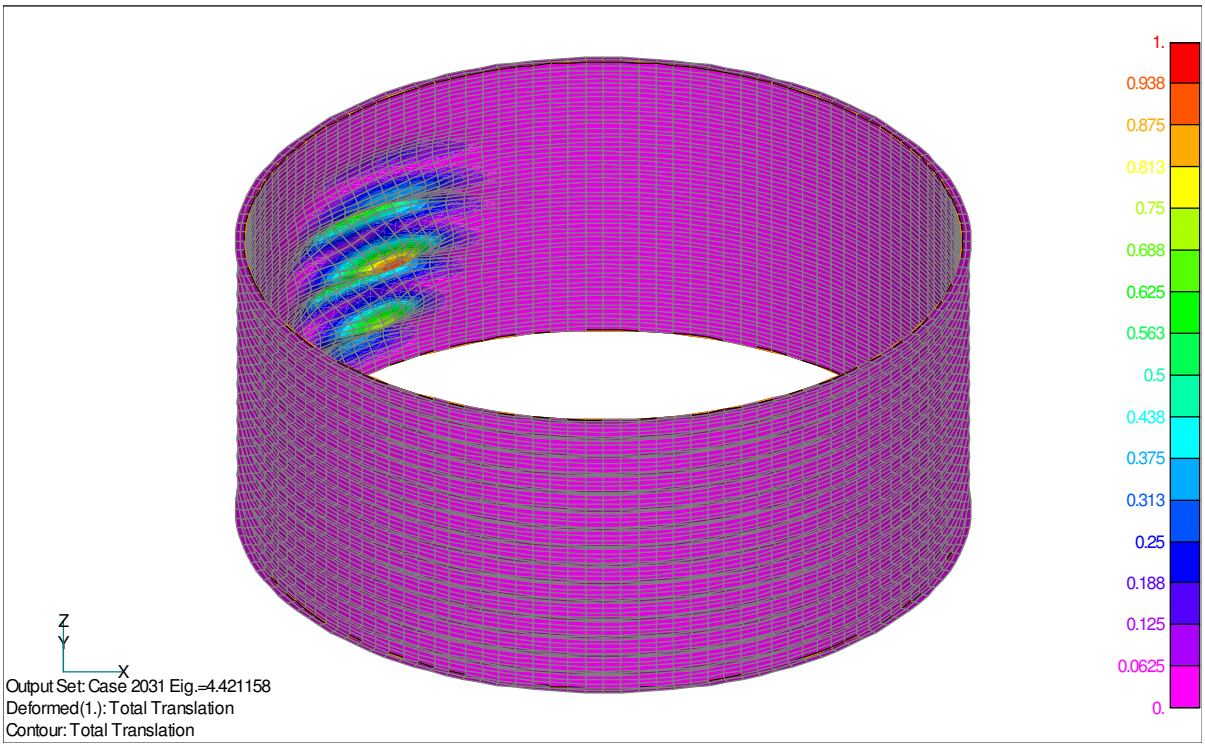

Figure 3.2.2-3. Eigenshape for Outer Cylinder refined model. Case 2031, $\lambda = 4.421158$.

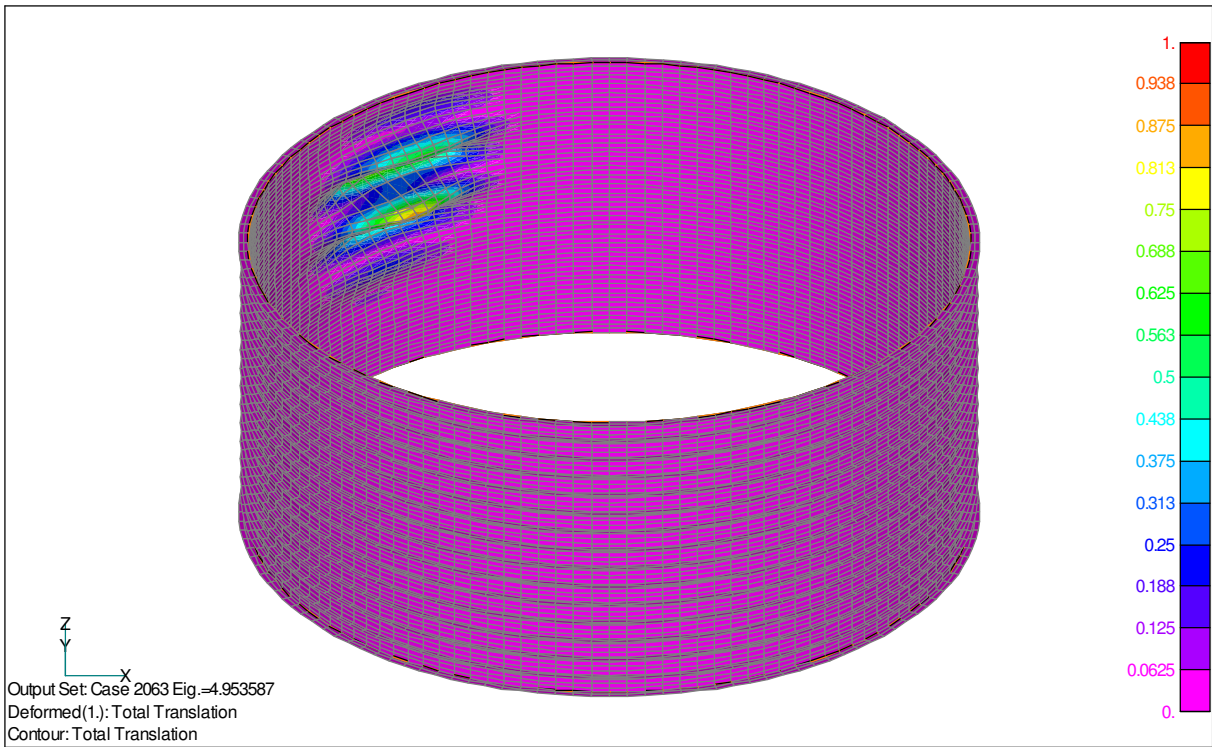

Figure 3.2.2-4. Eigenshape for Outer Cylinder refined model. Case 2063, $\lambda = 4.953587$.

Case 2031 w/2031 Imperfection
Top Major SF=2.0

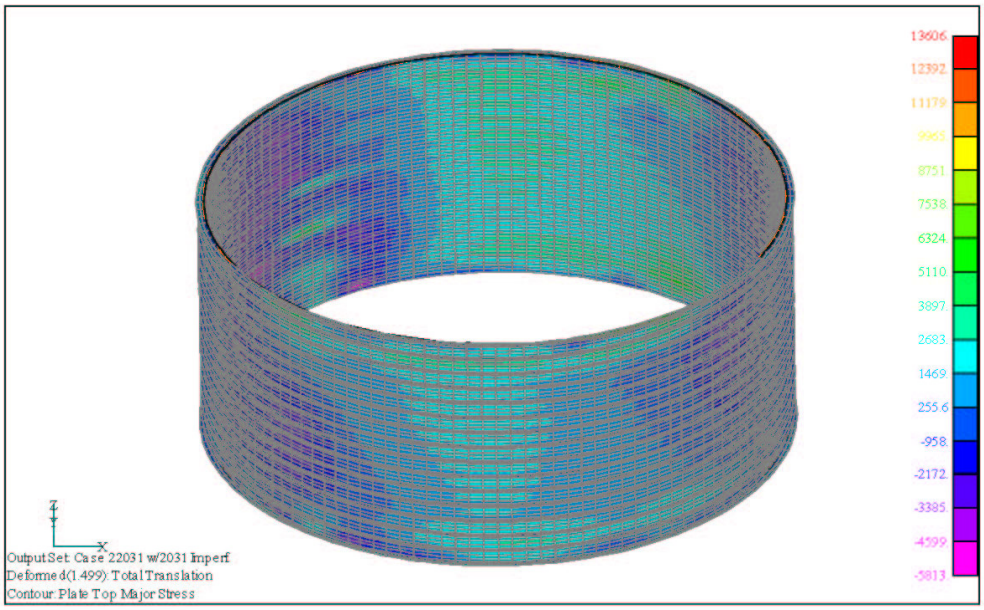

Figure 3.2.2-5. Top major principal stresses for Case 2031, with imperfection corresponding to same case. Maximum stress is 13606.0 psi.

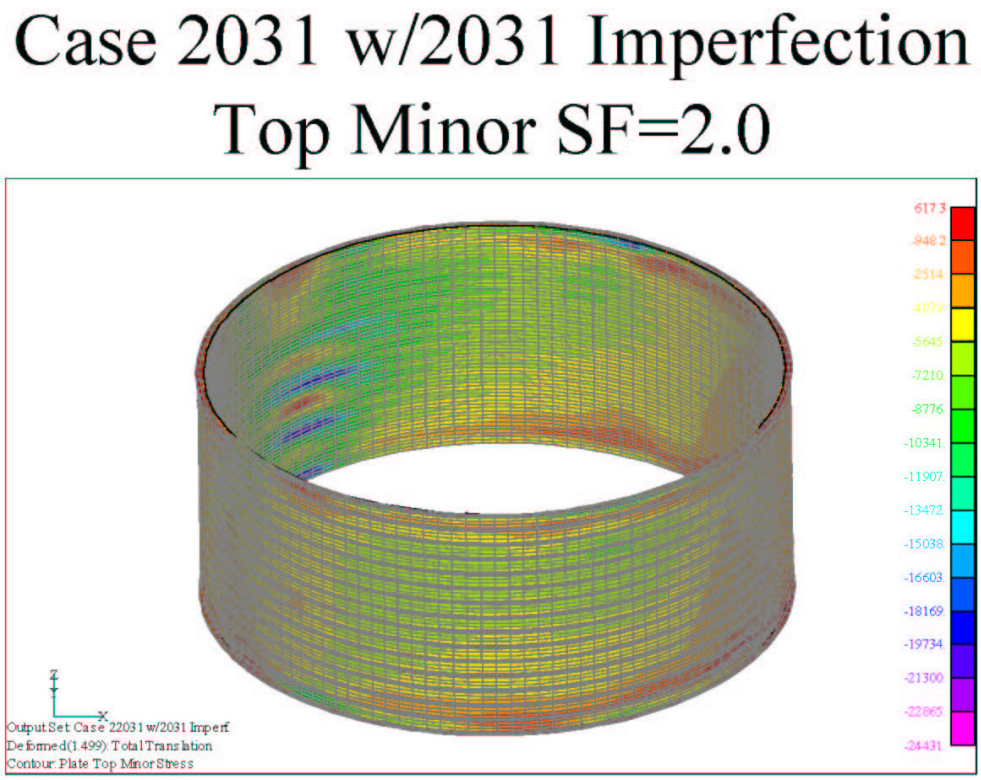

Figure 3.2.2-6. Top minor principal stresses for Case 2031, with imperfection corresponding to same case. Minimum stress is -24431.0 psi

Case 2031 w/2031 Imperfection
Bottom Major SF=2.0

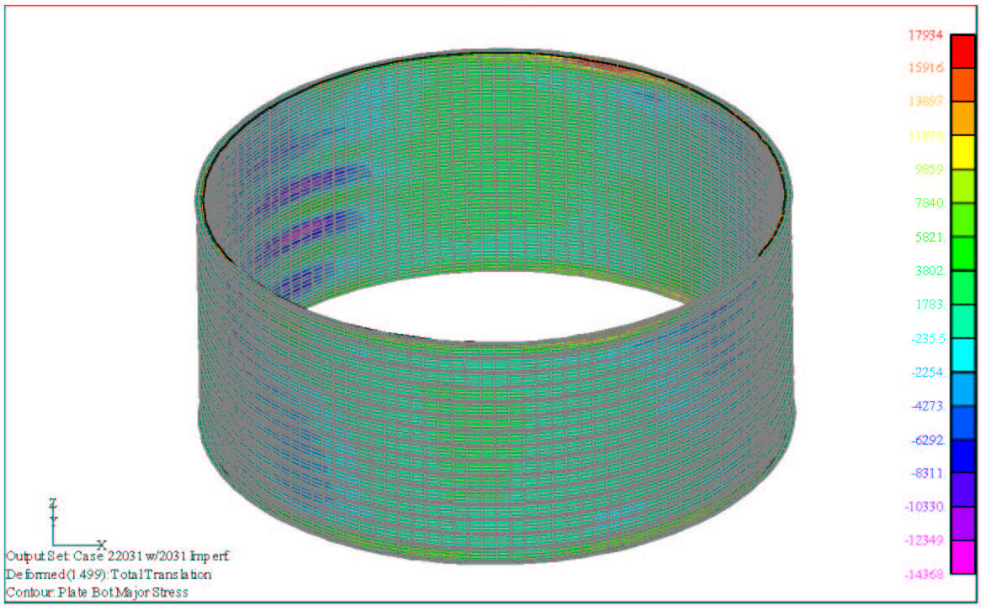

Figure 3.2.2-7. Bottom major principal stresses for Case 2031, with imperfection corresponding to same case. Maximum stress is 17934.0 psi.

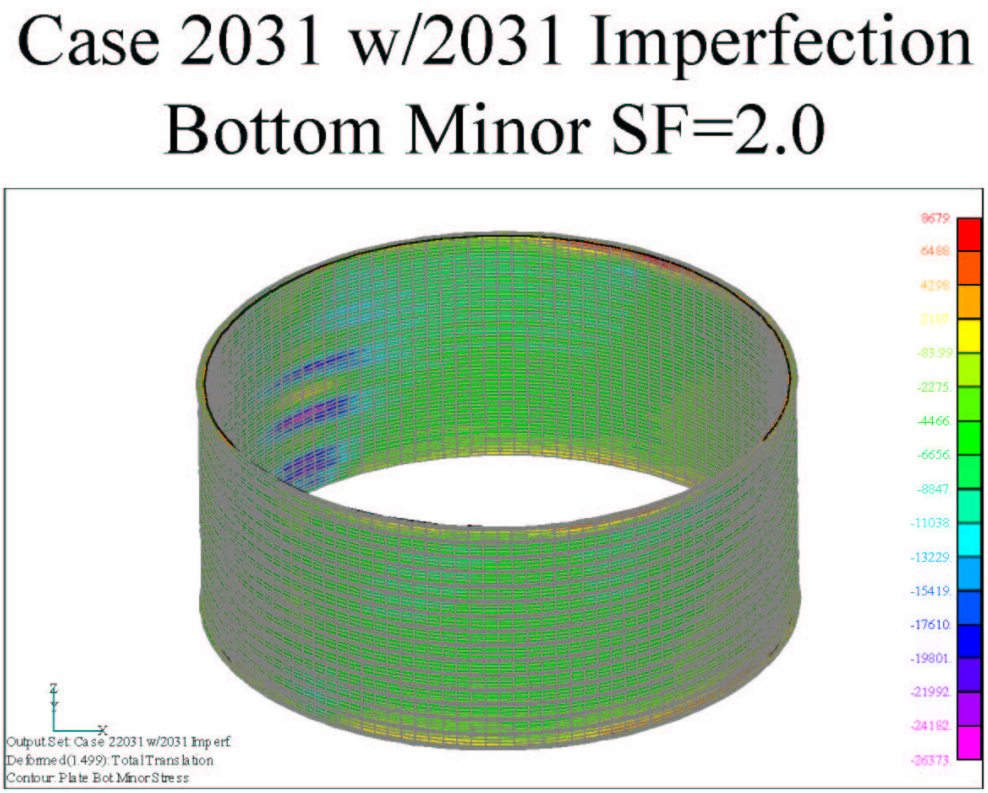

Figure 3.2.2-8. Bottom minor principal stresses for Case 2031, with imperfection corresponding to same case. Minimum stress is -26373.0 psi.

The following Figures summarize the Finite Element nonlinear analysis for the critical case 2063. This analysis is based on 6-02 loads.

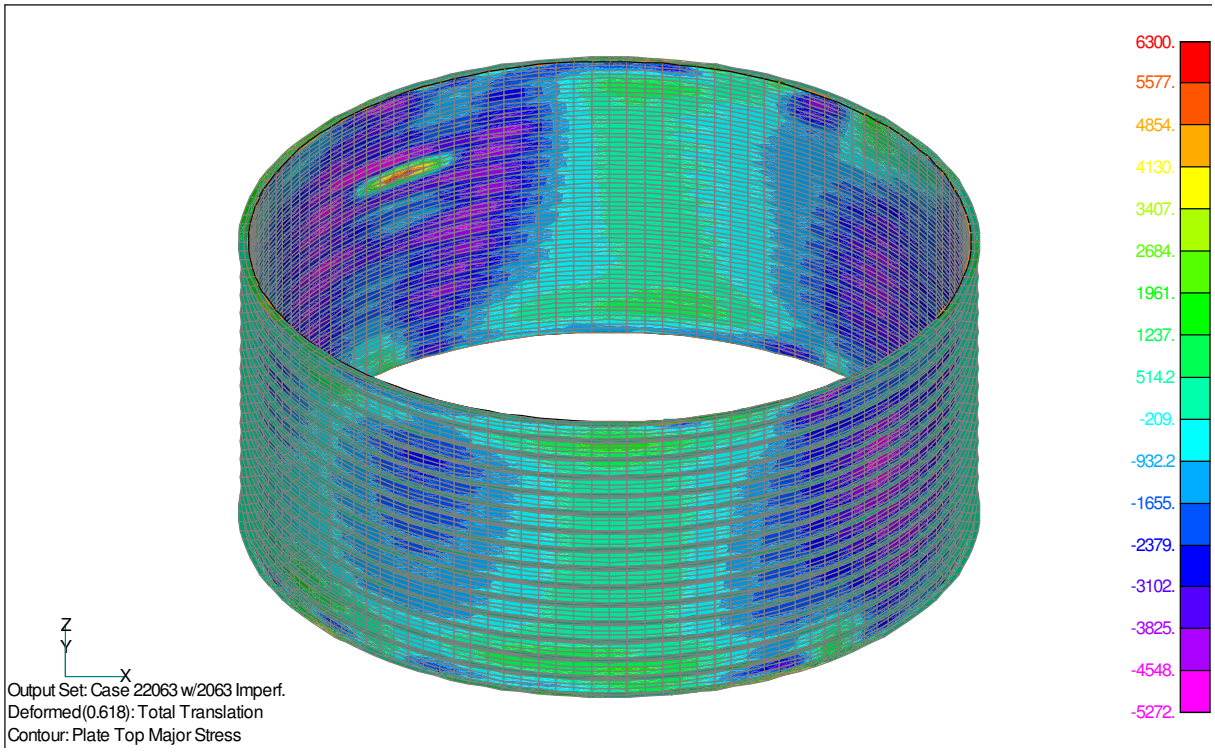

Figure 3.2.2-9. Top major principal stresses for Case 2063, with imperfection corresponding to same case. Maximum stress is 6300.0 psi. SF = 2.0.

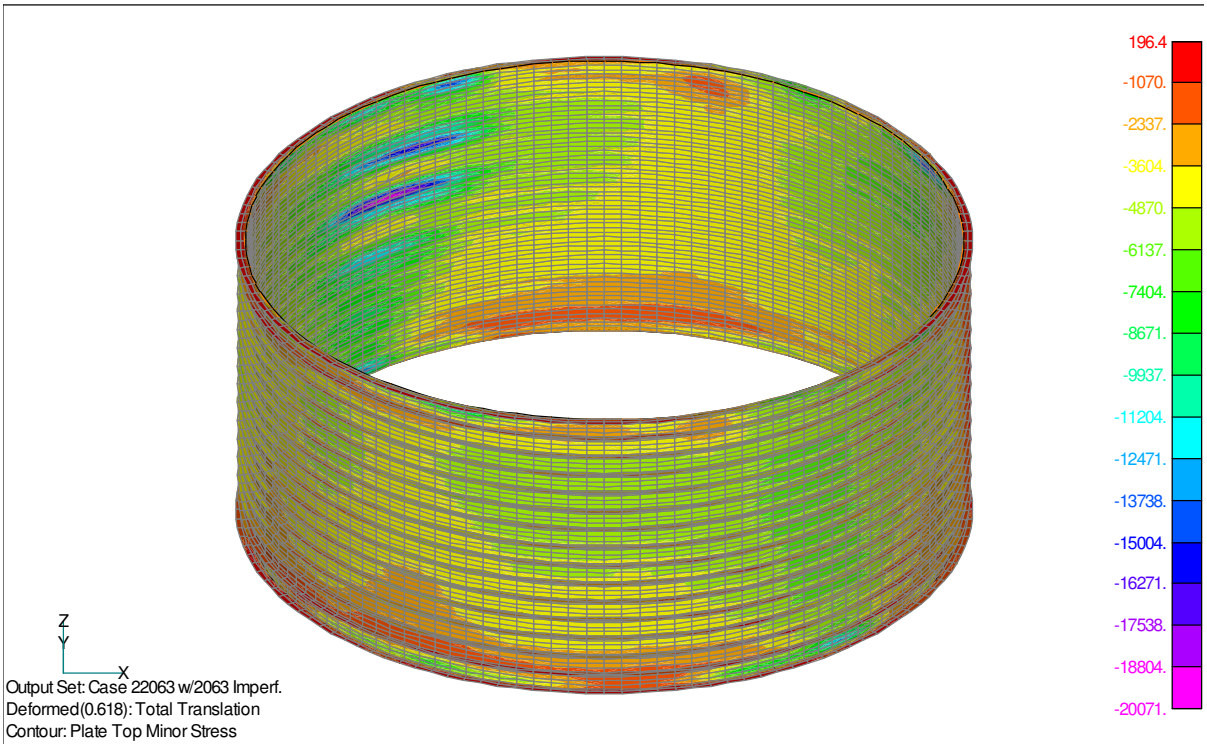

Figure 3.2.2-10. Top minor principal stresses for Case 2063, with imperfection corresponding to same case. Minimum stress is -20071.0 psi. SF = 2.0.

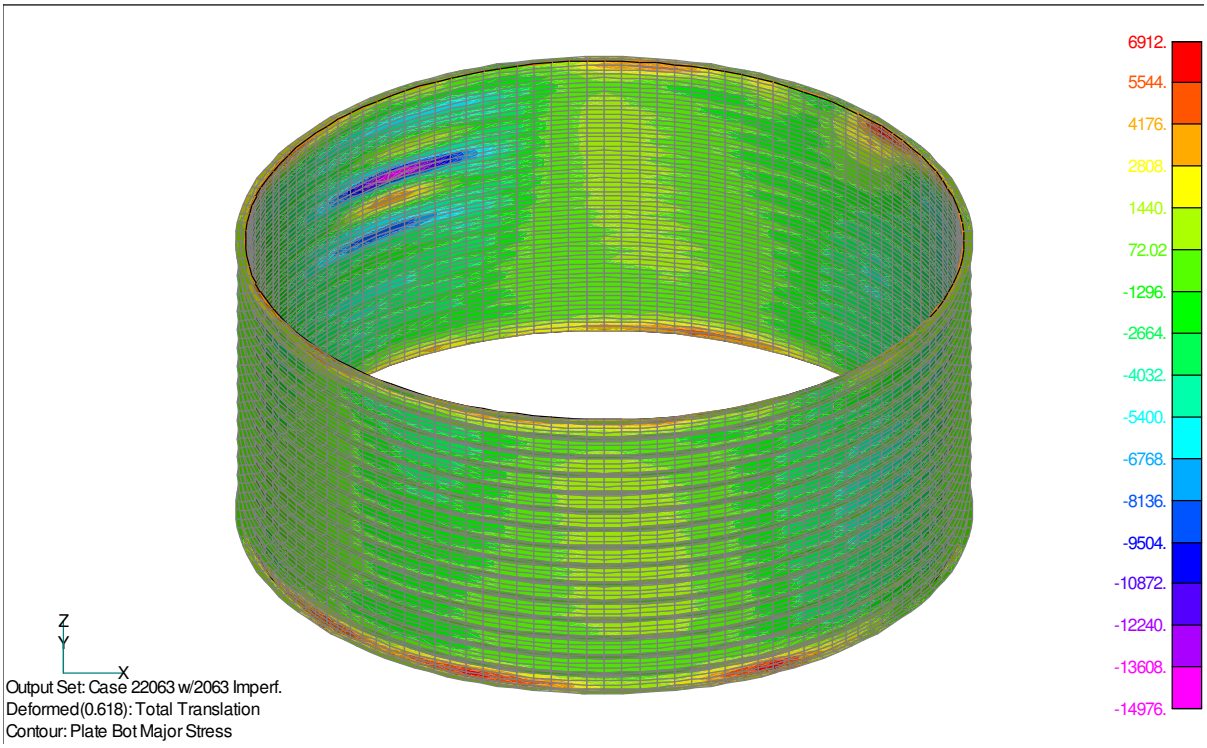

Figure 3.2.2-11. Bottom major principal stresses for Case 2063, with imperfection corresponding to same case. Maximum stress is 6912.0 psi. SF = 2.0.

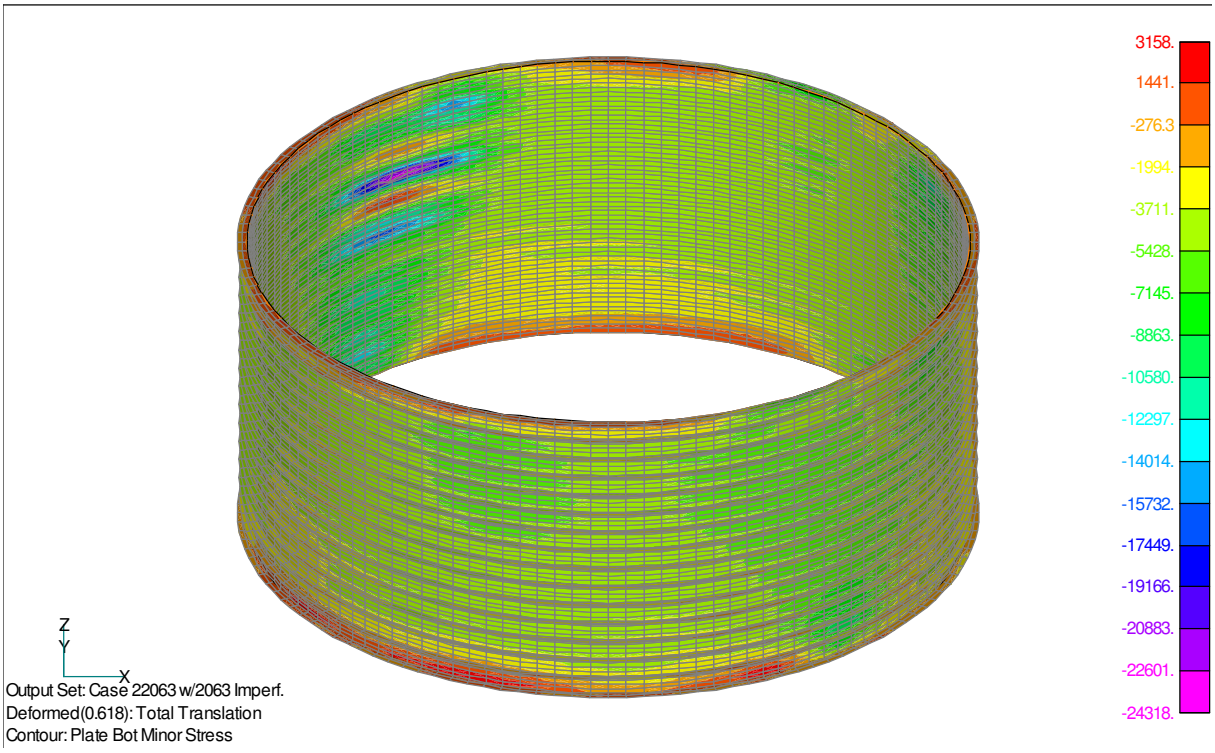

Figure 3.2.2-12. Bottom minor principal stresses for Case 2063, with imperfection corresponding to same case. Minimum stress is -24318.0 psi. SF = 2.0.

TYPE OF REVIEW	Review Item Disposition (RID)	RID NO.
CDR	ALPHA MAGNETIC SPECTROMETER – 02	AMS-CDR-1- 13
VEHICLE/OTHER: AMS-02	TEAM TRACKING NO.	TEAM NO./SYSTEM TITLE: STRUCTURAL DESIGN

DATE OF REVIEW	INITIATOR/ORG	MAIL CODE/PHONE/EXTENSION	SUBTEAM NO./SUBSYSTEM TITLE
MAY 13 – 16, 2003	H.C. Lo/Lockheed Martin	B25/333-7047	TEAM 1

RID TITLE: Safety Factor for Bucling Analysis

DOCUMENT NO.: PARA NO(S).: PART NO(S).:

DESCRIPTION OF PROBLEM:

CURRENT SAFETY FACTOR FOR BUCKLING (STABILITY IN GENERAL)IS 1.4. THE STATIC TEST DOES NOT COVER THE NON-LINEARITY NATURE OF THE BUCKLING PHENOMENA, ESPECIALLY THE HELIUM TANK CASING. TEST/ANALYSIS CORRELATION COVERS THE LINEARITY PREDICTION ONLY.

RECOMMENDATION:

USE A SAFETY FACTOR OF 2.0 FOR ALL STABILITY ANALYSIS.

IMPACT IF RECOMMENDATION NOT IMPLEMENTED:

POSSIBLE UNEXPECTED UNDER-DESIGNED STRUCTURE.

INITIATOR'S SIGNATURE NASA TEAM LEADER

CONTRACTOR'S (OR NASA'S) COMMENT:

ANALYSIS FOR THE OUTER CYLINDER BUCKLING WAS DONE TO A FACTOR OF SAFETY OF 2.0. AND THE RESULTS WERE DISCUSSED IN A TELECON WITH WILLIAM TORRES AT LM MICHOUD. ON 9/3/2004. DR. H.C.LO AND PAUL ROMINE WERE PRESENT DURING THE TELECON AND WERE SATISFIED WITH THE RESULTS OF THE ANALYSIS. OTHERS PRESENT DURING THE MEETING WERE C.BALASUBRAMANIAN, CHRIS TUTT, HOWARD CARTER AND BRUCE SOMMER.

PROJECT ENGINEER (CONTRACTOR OR NASA) TEAM LEADER (CONTRACTOR OR NASA)

DISPOSITIONED BY: ☐ NASA TEAM LEADER ☐ PREBOARD ☐ BOARD

TYPE ACTION

RID STATUS

☒ OPEN
- ☒ CONTRACTOR ACTION REQUIRED
- ☐ NASA ACTION REQUIRED

☒ CLOSED
- ☐ CONTRACTOR (OR NASA) EXPLANATION SATISFACTORY
- ☐ DISAPPROVED
- ☐ WITHDRAWN

☐ DOCUMENTATION
☐ STUDY
☐ TECHNICAL DIRECTION
☐ CONTRACTUAL DIRECTION
☐ OTHER

CONSTRAINTS

☐ PDR
☐ CDR
☐ END ITEM DELIVERY
☐ FRR
☐ NONE

ACTIONEE: C. BALAS ORG: LMSO DUE DATE: 11/30/03

DESCRIPTION OF ACTION:

The analysis successfully demonstrates that the AMS-02 vacuum case satisfies a safety factor 2.0 for buckling analysis and obtains a positive safety margin

HC Lo

06-12-07

CONTRACTOR OR NASA REPRESENTATIVE DATE NASA REPRESENTATIVE DATE

JSC Form 1491 (Rev Oct 93) (AMS Apr 03)

Balas, Chittur

From: Lo, Hung C (X-LM OPERATIONS SUPPORT)
Sent: Friday, September 03, 2004 10:52 AM
To: Balas, Chittur
Subject: RE: cdr rid 1-13 closure

Bala,

The analysis successfully demonstrates that the AMS-02 vacuum case satisfies a safety factor 2.0 for buckling analysis and obtains a positive safety margin.

I agree that the red 1-13 can be closed.

HC LO/Lockheed Martin
281-483-8950

-----Original Message-----
From: Balas, Chittur [mailto:chittur.balas@lmco.com]
Sent: Friday, September 03, 2004 9:53 AM
To: Lo, Hung C (X-LM OPERATIONS SUPPORT)
Cc: Tutt, Chris
Subject: cdr rid 1-13 closure

H.C.,

I am enclosing the RID1-13 on the buckling of the Outer cylinder for the AMS-02 Vacuum case . Please disposition the RID by accepting the analysi which we showed you in the telecon this morning.

<<1-13.doc>>

C. Balasubramanian (Bala)
Mechanical Systems Analysis Department
Structural Analysis Section
Lockheed Martin Space Operations
2400 NASA Road 1, B25
Houston, TX. 77058-3799

Phone: 281-333-7518
Fax: 281-333-8038
e-mail: chittur.balas@lmco.com

Chittur Balan

From: "McDonald, Patrick D" <Patrick.McDonald@escg.jacobs.com>
To: "Chittur Balan" <balas@hal-pc.org>
Cc: "Lauritzen, Carl A" <Carl.Lauritzen@escg.jacobs.com>
Sent: Monday, June 11, 2007 11:27 AM
Attach: FW PDR RID closure.msg
Subject: AMS VC buckling analysis

Bala,

For the buckling analysis on the VC case I do feel that I need to have something a little more formal than an email documenting ES approval of the buckling analysis.

In Dr. Lo's email, he mentions closing the PDR RID on buckling of the VC and opening a new RID requiring a buckling analysis using a factor of safety of 2.0.

Did Dr. Lo open a new RID and, if so, has the new RID been closed out? If so, his signature on the new RID concurring with the buckling analysis could serve as documentation of ES approval of the VC buckling analysis. Could you provide me with documentation of the RID closure, if there was one?

Thanks,

Patrick D. McDonald
Jacobs ESCG
2224 Bay Area Blvd.
Houston, TX, 77058
281-461-5583
patrick.mcdonald@escg.jacobs.com

3.3 Inner Cylinder

3.3.1 Inner Cylinder Strength Assessment

3.3.1 Stress Analysis for Vacuum Case Inner Cylinder

Introduction

The Inner Cylinder, shown in Figure 3.3.1-1, is the central core of the Vacuum Case. The 43.898-inch outer diameter x 32.306-inch length cylinder is manufactured from 2219-T852 hand-forged aluminum. The thickness for the majority of the cylinder's length is 0.125 inch thick, which tapers to 0.25 inch for the final 0.961 inches at each end shown in Figure 3.3.1-2. The 0.25 inch thickness at the ends to is needed to provide the proper cross sectional dimensions necessary to weld the Inner Cylinder to the top and bottom Conical Flanges of the Vacuum Case.

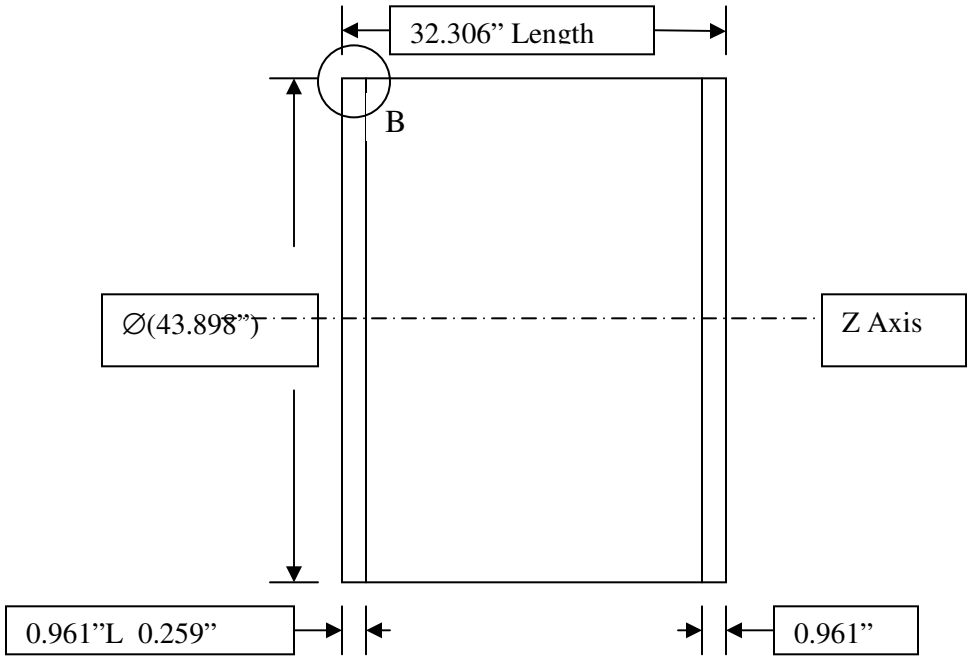

Figure 3.3.1-1: Side View of Vacuum Case Inner Cylinder

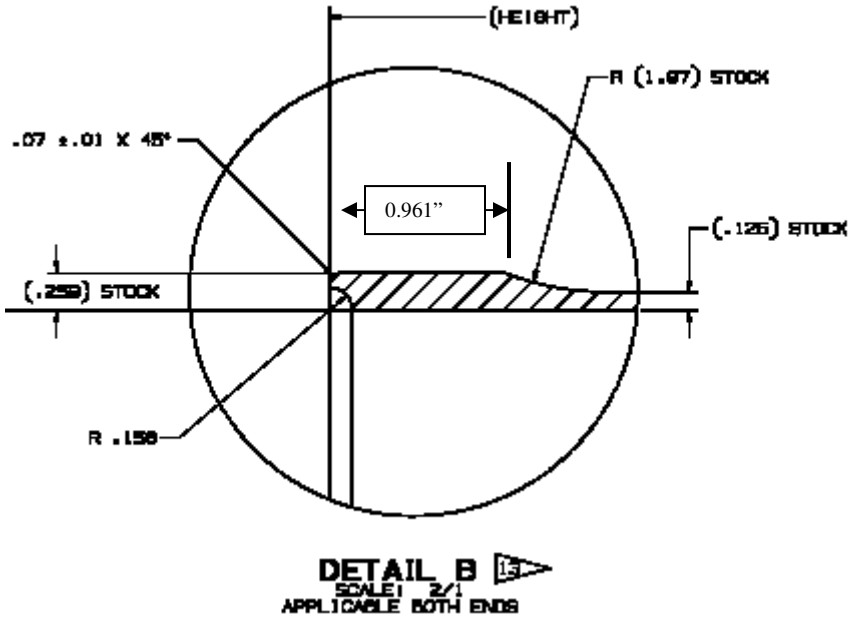

Figure 3.3.1-2: End Detail of Inner Cylinder

Analysis Method Used to Perform the Stress Analysis for the Inner Cylinder

MSC NASTRAN v2001 is used for the finite element analysis of the Inner Cylinder. The pre/post processing software used in building and analyzing the NASTRAN input and output is FEMAP version 8.2. The hi-fi Inner Cylinder model is built entirely out of CQUAD4 and CTRIA3 elements. The ends of the cylinder are connected to the top and bottom Conical Flanges with RBE2 elements. The entire Vacuum Case model, including the high fidelity Inner Cylinder, is integrated with the USS and magnet assembly model to make up the total AMS-02 payload as shown on Figure 3.3.1-3. The results from this model were used to determine the critical stresses for this component.

Stability analysis for the Inner Cylinder is located in section 3.3.2.

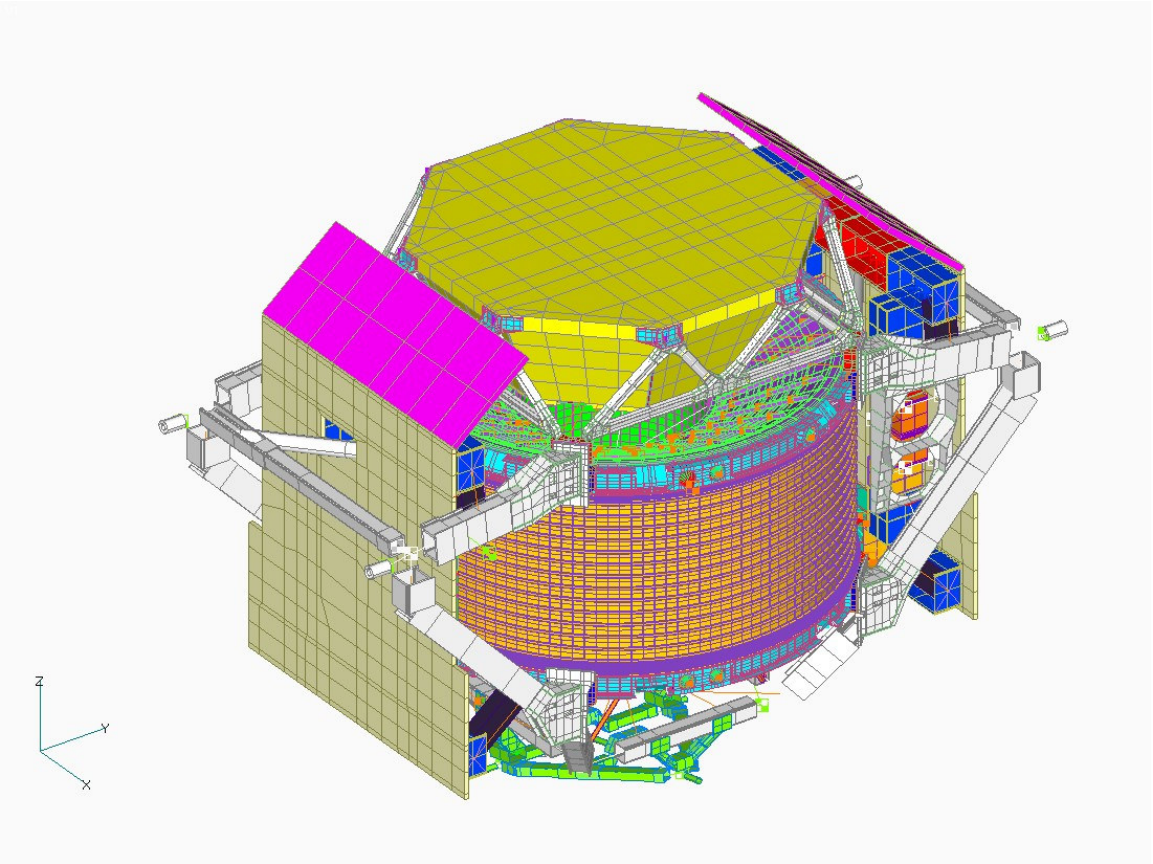

Figure 3.3.1-3: AMS-02 Model 2-03

Inner Cylinder Finite Element Model Checks

Strain energy and rigid body modes were checked using the high fidelity Inner Cylinder Vacuum Case model combined with the remaining components to make up the full payload model. The overall payload model used in the analysis is version 2-03 found in the /hsm/bsommer/ams/bulk/2-03 directory. The Vacuum Case model used for the Inner Cylinder analysis is located in the /hsm/bsommer/ams/bulk/stressmods/innercylinder directory and titled vc-inner.dat. Figure 3.3.1-4 shows the fine meshed Inner Cylinder model. The top and bottom of the Inner Cylinder contains rigid elements that attach the cylinder, with all six degrees of freedom (DOF), to the Conical Flanges. This simulates a full penetration welded joint. The weld interface is meshed with CQUAD4 elements rotated about the z-axis every 0.9375° and spaced 0.125" apart along the vertical z-axis. A second ring of rigid

elements, 0.75" below the weld and constrained only in the radial direction, simulates the last point of contact that the Inner Cylinder makes with the conical flanges.

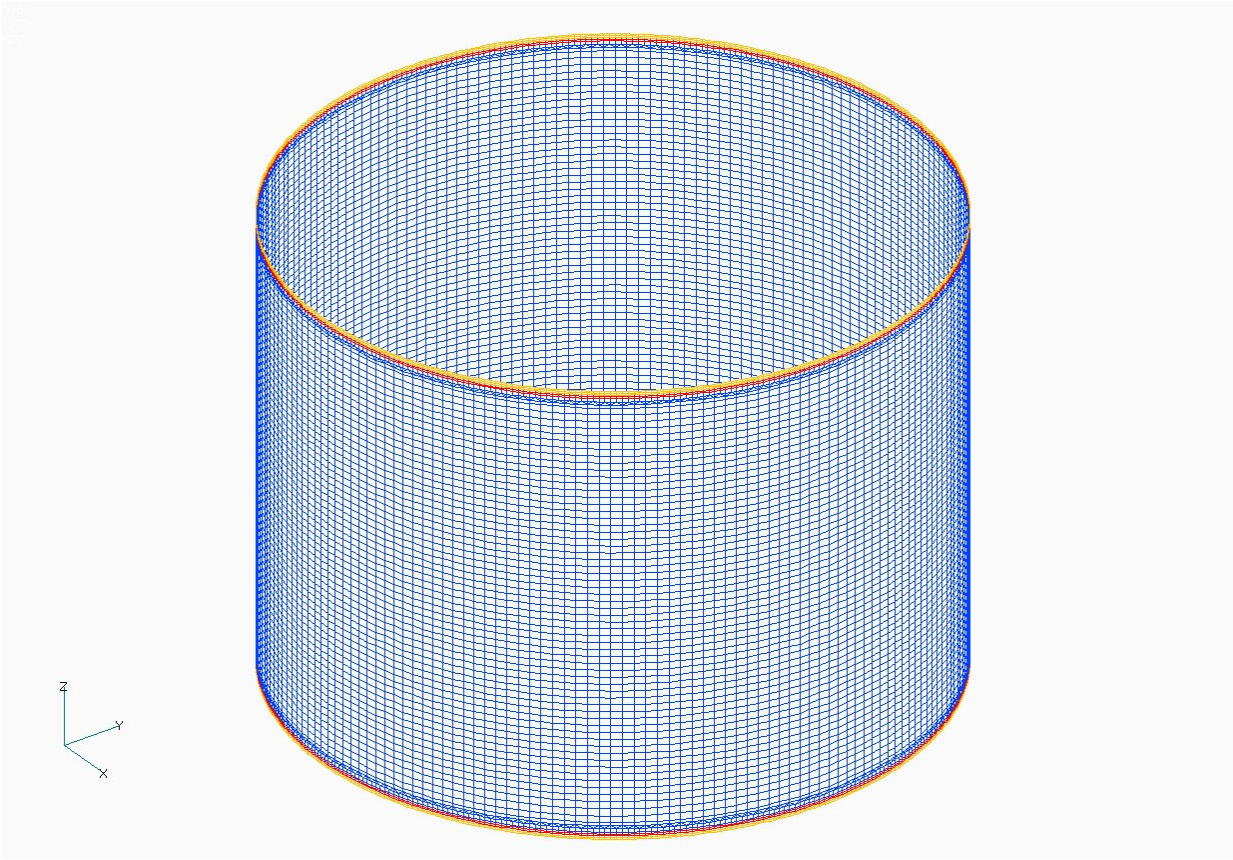

Figure 3.3.1-4: Inner Cylinder Stress Model

Figure 3.3.1-5 shows a schematic of the Inner Cylinder to Conical Flange weld interface. The rigid element attachment details are shown in Figure 3.3.1-6.

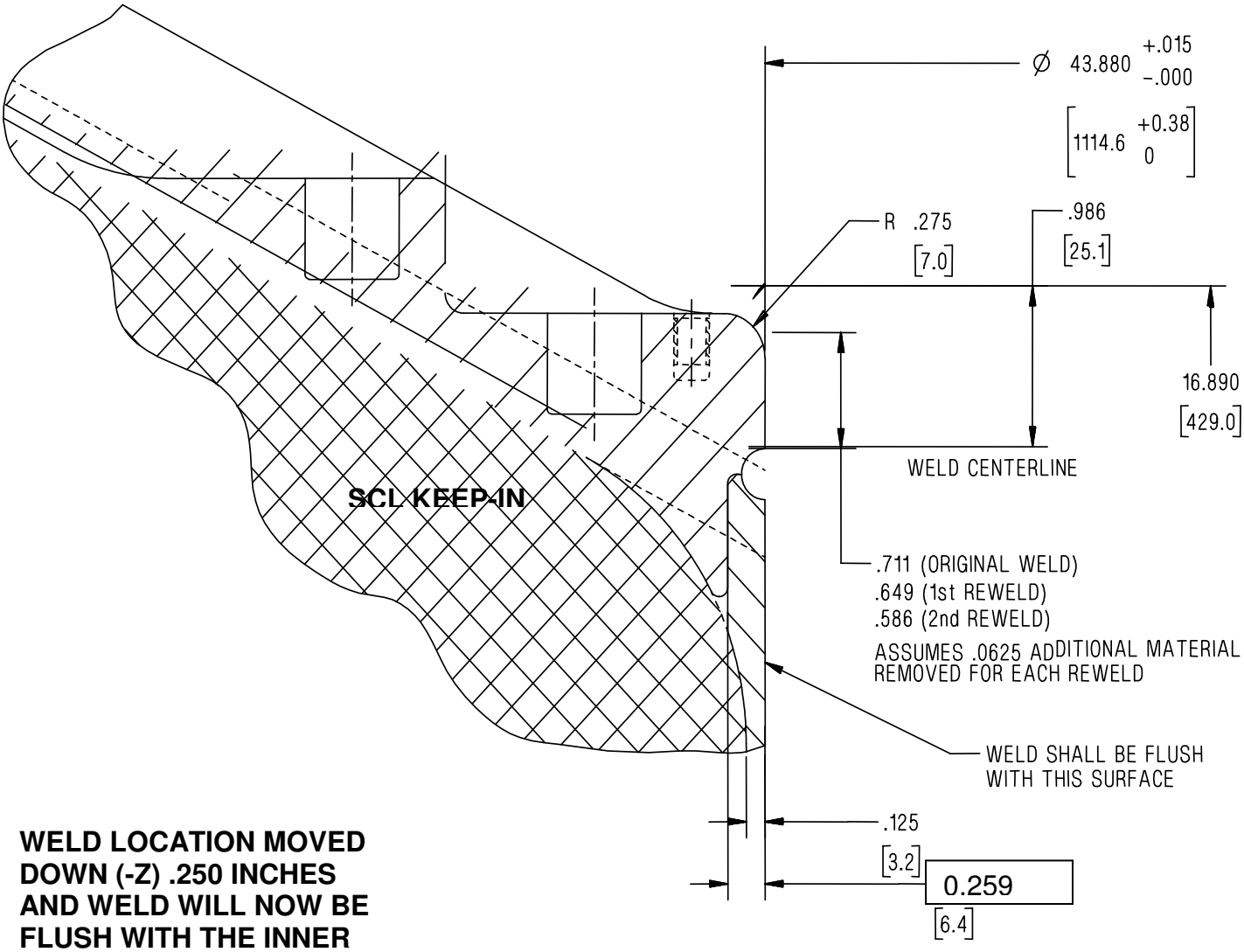

WELD LOCATION MOVED DOWN (-Z) .250 INCHES AND WELD WILL NOW BE FLUSH WITH THE INNER DIAMETER.

Closeout Weld Location

Figure 3.3.1-5: Inner Cylinder to Conical Flange Weld Detail

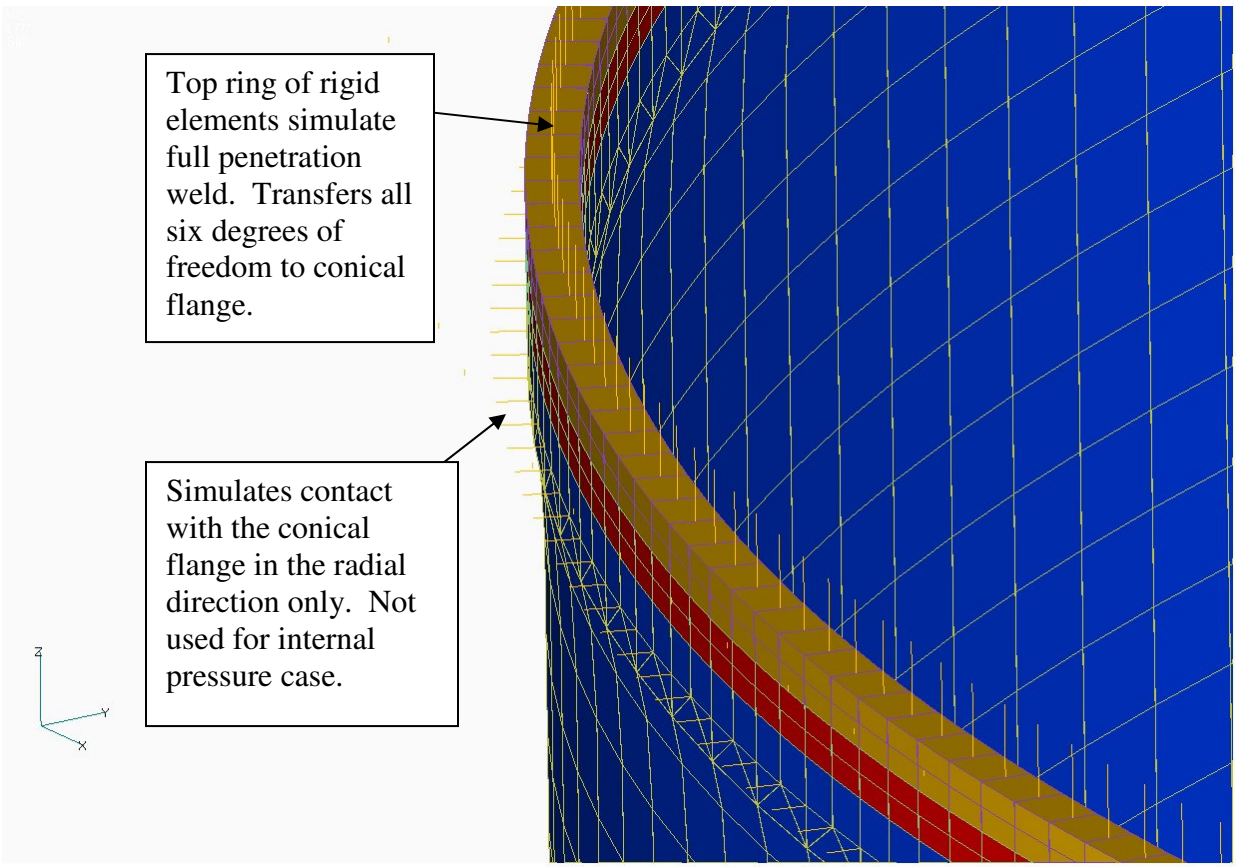

Figure 3.3.1-6: Finite Element Model Detail for Conical Flange to Inner Cylinder Attachment

The strain energy and rigid body modes checks for this model are found in the /hsm/bsommer/ams/checks/2-03 directory entitled checkIC.f06. The strain energy check limits that are acceptable are for values of 1.0E-5 for translations and 1.0E-3 for rotations. The results for the strain energy checks for the KGG, KNN, KFF matrices are found in Tables 3.3.1-1 through 3.3.1-3. Only the diagonal terms of the 6x6 matrix are listed. The results for the rigid body modes, listed in Table 3.3.1-4 shows six rigid body modes with a good separation between the last rigid body mode 6 and the first real mode mode 7. The total model Mass and CG location is shown in Table 3.3.1-5. The mass units are in slinches and the z coordinate is in the orbiter coordinate system.

Table 3.3.1-1: KGG for Inner Cylinder Model

RESULTS OF RIGID BODY CHECKS OF MATRIX KGG (G-SET) FOLLOW:
PRINT RESULTS IN ALL SIX DIRECTIONS AGAINST THE LIMIT OF 1.000000E-02

DIRECTION	STRAIN ENERGY	PASS/FAIL
1	9.012086E-07	PASS
2	6.367055E-07	PASS
3	1.797336E-06	PASS
4	3.891126E-03	PASS
5	5.230546E-05	PASS
6	2.930787E-03	PASS

Table 3.3.1-2: KNN for Inner Cylinder Model

RESULTS OF RIGID BODY CHECKS OF MATRIX KNN (N-SET) FOLLOW:
PRINT RESULTS IN ALL SIX DIRECTIONS AGAINST THE LIMIT OF 1.000000E-02

DIRECTION	STRAIN ENERGY	PASS/FAIL
1	9.012086E-07	PASS
2	6.367055E-07	PASS
3	1.797336E-06	PASS
4	3.891126E-03	PASS
5	5.230546E-05	PASS
6	2.930787E-03	PASS

Table 3.3.1-3: KFF for Inner Cylinder Model

RESULTS OF RIGID BODY CHECKS OF MATRIX KFF (F-SET) FOLLOW:
PRINT RESULTS IN ALL SIX DIRECTIONS AGAINST THE LIMIT OF 1.000000E-02

DIRECTION	STRAIN ENERGY	PASS/FAIL
1	9.012086E-07	PASS
2	6.367055E-07	PASS
3	1.797336E-06	PASS
4	3.891126E-03	PASS
5	5.230546E-05	PASS
6	2.930787E-03	PASS

Table 3.3.1-4: Rigid Body Modes for Inner Cylinder Model

MODE NO.	EXTRACTION ORDER	EIGENVALUE	RADIANS	CYCLES (Hz)	GENERALIZED MASS	GENERALIZED STIFFNESS
1	1	-3.73E-05	6.11E-03	9.72E-04	1.00E+00	-3.73E-05
2	2	-2.04E-05	4.52E-03	7.19E-04	1.00E+00	-2.04E-05
3	3	-1.04E-05	3.22E-03	5.13E-04	1.00E+00	-1.04E-05
4	4	1.32E-05	3.64E-03	5.79E-04	1.00E+00	1.32E-05
5	5	1.75E-05	4.19E-03	6.66E-04	1.00E+00	1.75E-05
6	**6**	**3.54E-05**	**5.95E-03**	**9.47E-04**	**1.00E+00**	**3.54E-05**
7	**7**	**2.33E+03**	**4.82E+01**	**7.68E+00**	**1.00E+00**	**2.33E+03**
8	8	2.33E+03	4.82E+01	7.68E+00	1.00E+00	2.33E+03

Table 3.3.1-5: Mass for Stress and Loads Model and CG For Inner Cylinder Model

Dircetion Mass Axis System (m)	Stress Model Mass (slinches)	X-C.G. (in)	Y-C.G. (in)	Z-C.G. (in)
X	1.6391E-01	1.63E-16	-4.71E+01	1.87E+01
Y	1.6391E-01	4.65E+00	3.24E-16	1.87E+01
Z	1.6391E-01	4.65E+00	-4.71E+01	-6.34E-18

- The cg coordinates for Table 3.3.1-5 should be close to zero since the cg is defined around node 999999

Table 3.3.1-6: CG Location for AMS-02 in the Orbiter Z location

X (in)	Y (in)	Z (in)
-2.46E-01	2.58E+00	3.86E+02

Loads and Constraints

The AMS-02 payload model is constrained at five trunnion locations. A total of 256 load cases for multiple launch/landing scenarios were run using NASTRAN. The critical load cases for the Inner Cylinder were determined by sorting the element stresses from the Inner Cylinder loads model. The high fidelity Inner Cylinder model is incorporated into the loads Vacuum Case model for use in determining the peak stresses. A total of seventeen load cases were chosen as the critical load cases, which included a contingency load case for an internal pressure of 0.8 atmospheres.

The list of the critical load cases with the corresponding load factors is shown in Table 3.3.1-7. Note that the R2### load cases are for landing with a full helium tank. R1### are launch load cases. The Load Factors used for this analysis are listed in Table 1, Page 14 of the AMS-02 Structural Verification Plan for STS and ISS(JSC-28792, Rev.B). The NASTRAN run streams for these load cases can be found in the /hsm/bsomer/ams/nonlin/innercylinder/2000 directory and labeled R20##.dat or /hsm/bsommer/ams/nonlin/innercylinder/1000 with the titles R10##.dat.

Table 3.3.1-7: Critical Load Case Load Factors for Inner Cylinder Model

Load Case	Event	Nx (g)	Ny (g)	Nz (g)	Rx (rad/s^2)	Ry (rad/s^2)	Rz (rad/s^2)
1008	Launch	5.7	1.6	5.9	-10.0	-25.0	-18.0
1041	Launch	-5.7	1.6	-5.9	10.0	25.0	18.0
1045	Launch	-5.7	1.6	-5.9	-10.0	25.0	18.0
1062	Launch	-5.7	-1.6	-5.9	-10.0	25.0	-18.0
2007	Landing Full	4.5	2.0	6.5	-20.0	-35.0	15.0
2008	Landing Full	4.5	2.0	6.5	-20.0	-35.0	-15.0
2016	Landing Full	4.5	2.0	-6.5	-20.0	-35.0	-15.0
2019	Landing Full	4.5	-2.0	6.5	20.0	-35.0	15.0
2020	Landing Full	4.5	-2.0	6.5	20.0	-35.0	-15.0
2027	Landing Full	4.5	-2.0	-6.5	20.0	-35.0	15.0
2033	Landing Full	-4.5	2.0	6.5	20.0	35.0	15.0
2037	Landing Full	-4.5	2.0	6.5	-20.0	35.0	15.0
2041	Landing Full	-4.5	2.0	-6.5	20.0	35.0	15.0
2042	Landing Full	-4.5	2.0	-6.5	20.0	35.0	-15.0
2053	Landing Full	-4.5	-2.0	6.5	-20.0	35.0	15.0
2054	Landing Full	-4.5	-2.0	6.5	-20.0	35.0	-15.0
2061	Landing Full	-4.5	-2.0	-6.5	-20.0	35.0	15.0

An interface loads comparison between the stress and loads model, shown on Tables 3.3.1- 8 and 3.3.1-9, show a close correlation between strap forces and reaction forces at the trunnion attachment points. Only one load case is shown in the tables to illustrate the similarities between the two models.

Table 3.3.1-8: Strap Force Loads Comparison of 2-03 Loads Model vs. Inner Cylinder Stress Model for Load Case 1045

Strap ID	Strap Forces (lbs) Loads Model 2-03	Strap Forces (lbs) Stress Model 2-03	Abs Difference (lbs)
90001	21536.22	21550.31	14.090
90002	1720.04	1725.90	5.862
90003	5393.09	5166.23	226.858
90004	1443.65	1444.44	0.789
90005	10944.35	10950.03	5.680
90006	7309.97	7300.49	9.477
90007	4253.01	4258.97	5.960
90008	5133.97	5135.07	1.109
90009	1818.36	1823.44	5.081
90010	6046.60	6056.24	9.633
90011	1070.62	1074.43	3.809
90012	1432.79	1432.66	0.130
90013	1822.22	1821.27	0.952
90014	8667.13	8678.48	11.344
90015	1408.19	1411.33	3.133
90016	1803.96	1808.75	4.782

Table 3.3.1-9: Mass Calculated from Trunnion Forces vs. Mass of Stress Model

Axis	Total Trunnion Load	Load Factor	Mass from Trunnion Reaction Load LC 1045	Mass Stress Model
X	85517.79	-5.7	1.5003E+04	1.4995E+04
Y	-23998.60	1.6	1.4999E+04	1.4991E+04
Z	88511.16	-5.9	1.5002E+04	1.4993E+04

The discrepancies in strap loads are not seen as a problem for the Inner Cylinder model itself. The differences in the resultant mass at the trunnions and the actual model mass is due to a slight imbalance in the pressure load. The imbalance primarily occurs in the support rings and not at the Inner Cylinder itself. The bulk of the imbalanced force is transferred directly to the USS-02 by way of the interface plates and diagonal strut attachments and not through the Inner Cylinder.

Stress Analysis Results for Inner Cylinder

The maximum stresses for the Inner Cylinder are shown below. NASPOST was used to sort the maximum stresses from the load cases listed in Table 3.3.1-7. The punch files containing the analysis results are found in the /hsm/bsommer/ams/nonlin/innercylinder/2000/2-03/ directory. The files are named according to the load case. (i.e.. R2019.pch, R2020.pch, etc.....) The NASPOST list file can be found in /hsm/bsommer/ams/naspost/inner/2-03/ directory. A copy of this list file is located in Appendix A3. The load case containing the highest stress for principle, VonMises and shear are shown below in Table 3.3.1-10. Contour plots of the highest principal stress are shown in Figures 3.3.1-7 through 3.3.1-9.

Table 3.3.1-10: Highest Stresses for Inner Cylinder Model

Load Case ID	Elem. ID	Elem. Type	Stress Type	MAX Stress (ksi)	Appendix A3 Reference Page
R1045	202937	Quad4-plate	Max Principal	-31.39	A3-5
R1045	202937	Quad4-plate	Max Vonm	29.13	A3-7
R1045	202937	Quad4-plate	Max Shear	15.7	A3-8

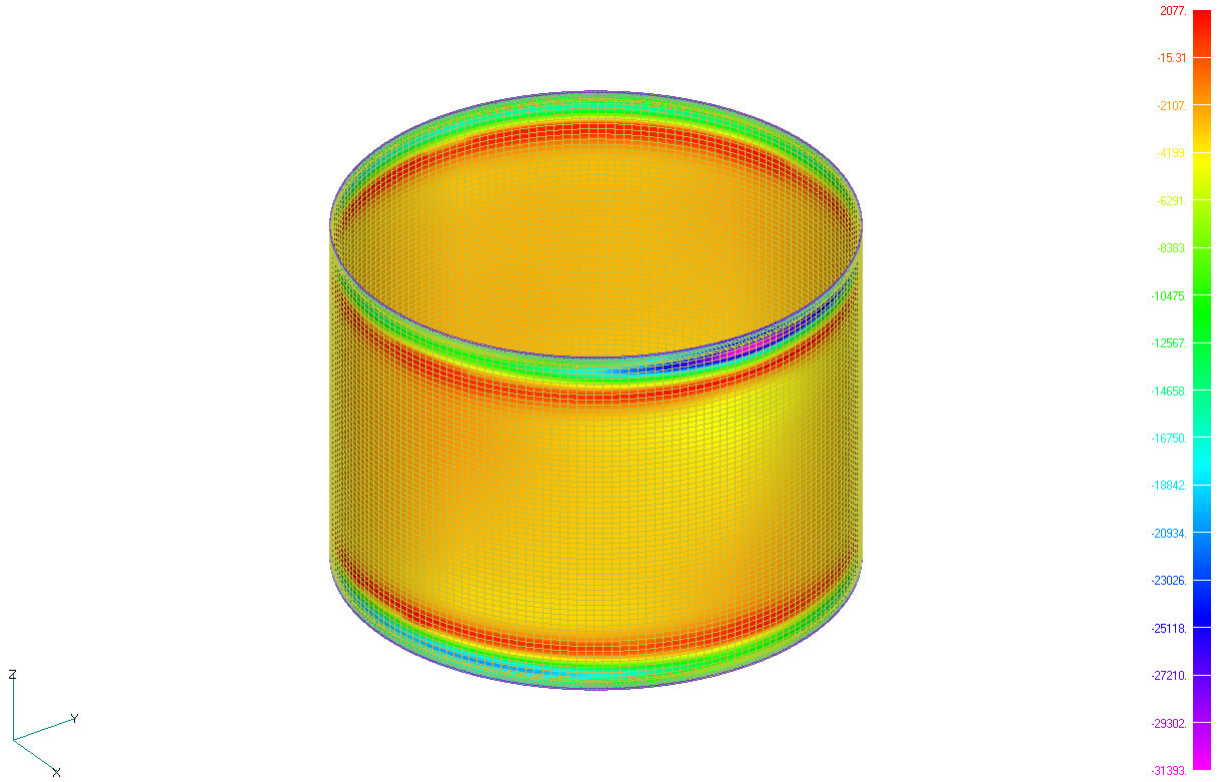

Figure 3.3.1-7: Inner Cylinder Stress Contour for Load Case 1045

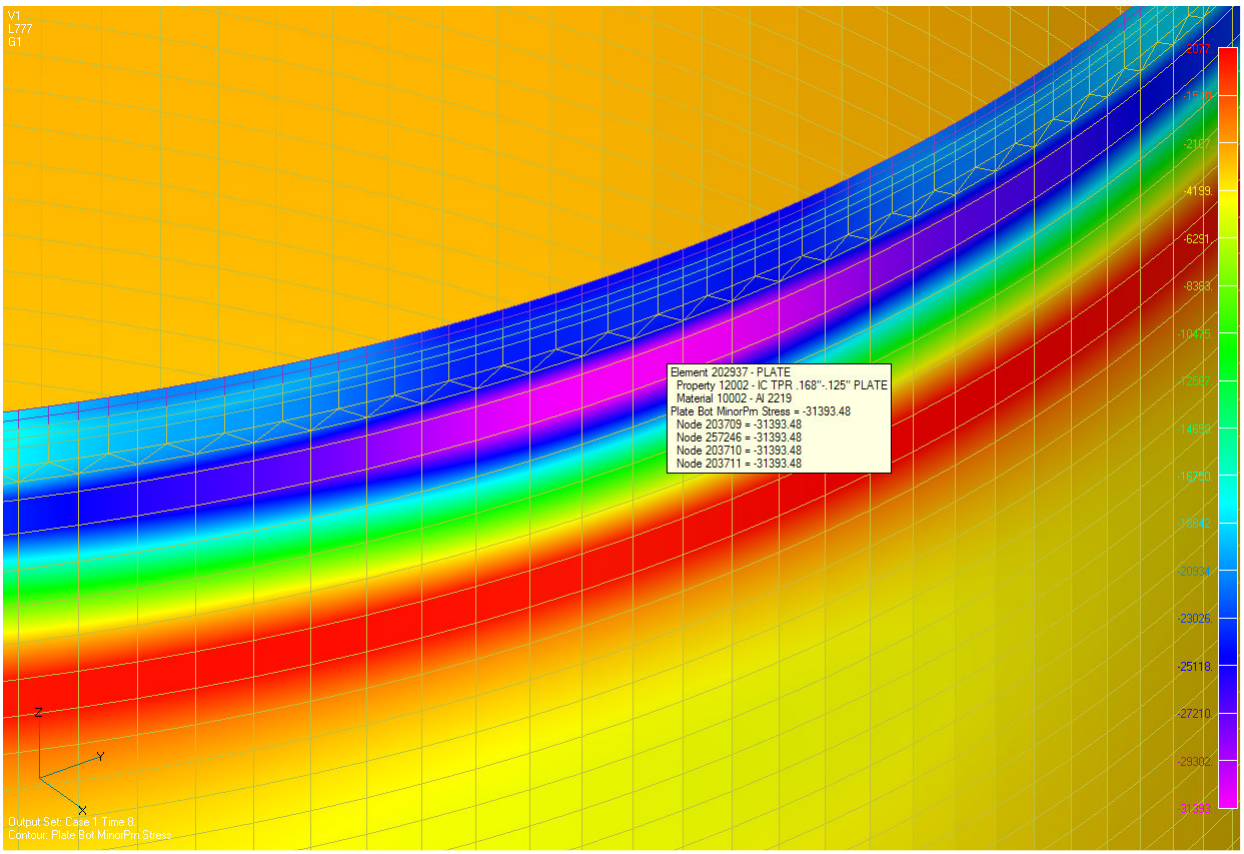

Figure 3.3.1-8: Max Absolute Principal Stress of 31393psi in Element ID 202937

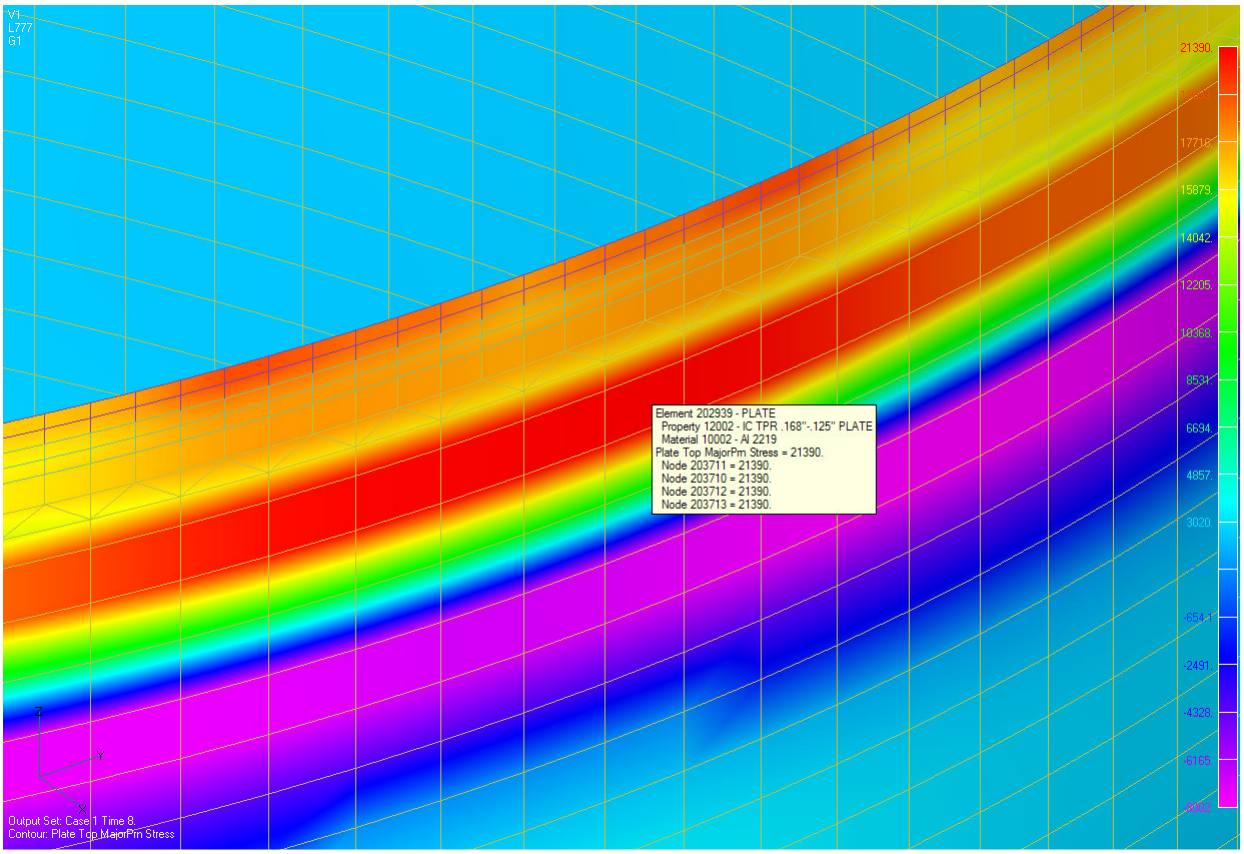

Figure 3.3.1-9: Max Tensile Stress of 21390 psi In Element ID 202939

Margins of Safety

INNER CYLINDER, VACUUM CASE, AMS-02 2219-T852 (AMS 4144)

Material allowables are from MIL-HDBK-5H Table 3.2.7.0(c) for 2.0" to 4.0" thick Hand forging

$Ftu := 60000\,psi$	Ultimate tensile strength	$FSy := 1.1$	Yield Factor of Safety
$Fty := 46000\,psi$	Compressive yield strength	$FSu := 1.4$	Ultimate Factor of Safety
$Fsu := 32000\,psi$	Ultimate shear strength	$\gamma := 0.96$	Thermal reduction factor at 140 F

The maximum stresses for the inner cylinder occur in load case 1045. Margins for the inner cylinder will be calculated based on the stress values shown below.

$\sigma_{ult} := 31393.48\,psi$

$\sigma_{yield} := 29130.16\,psi$

$\tau_{shear} := 15696.74\,psi$

Margins of Safety

Ultimate $\quad MSu := \dfrac{\gamma \cdot Ftu}{\sigma_{ult} \cdot FSu} - 1 \qquad MSu = 0.311$

Yield $\quad MSy := \dfrac{\gamma \cdot Fty}{\sigma_{yield} \cdot FSy} - 1 \qquad MSy = 0.378$

Shear $\quad MSs := \dfrac{\gamma \cdot Fsu}{\tau_{shear} \cdot FSu} - 1 \qquad MSs = 0.398$

Inner Cylinder Weld Analysis

The stresses for the welded interface between the Inner Cylinder to Conical Flange is calculated using the edge stresses for the Quad4-plate elements located at each end of the conical flanges. The critical weld load cases were determined by sort for the max positive principal stress at the Inner Cylinder to conical flange interface. All 256 load cases were sorted using the loads model to determine the worst load cases for the weld. The worst load cases for the weld coincided with the worst load cases for the Inner Cylinder. The critical weld load case is shown in Table 3.3.1-11. The highest weld stress is shown in Table 3.3.1-12. The stress contour plot for the weld is shown on Figure 3.3.1-10.

Table 3.3.1-11: Critical Load Case Load Factor Combinations for Inner Cylinder to Conical Flange Weld

Load Case	Event	Nx (g)	Ny (g)	Nz (g)	Rx (rad/s^2)	Ry (rad/s^2)	Rz (rad/s^2)
1045	Launch	-5.7	1.6	-5.9	-10	25	18

Table 3.3.1.2-2: Highest Weld Stress for Inner Cylinder to Conical Flange

Load Case	Elem. ID	Elem. Type	MAX PRIN Bottom (ksi)	Appendix A3
R1045	300224	Quad4-plate	19666.58	A3-3

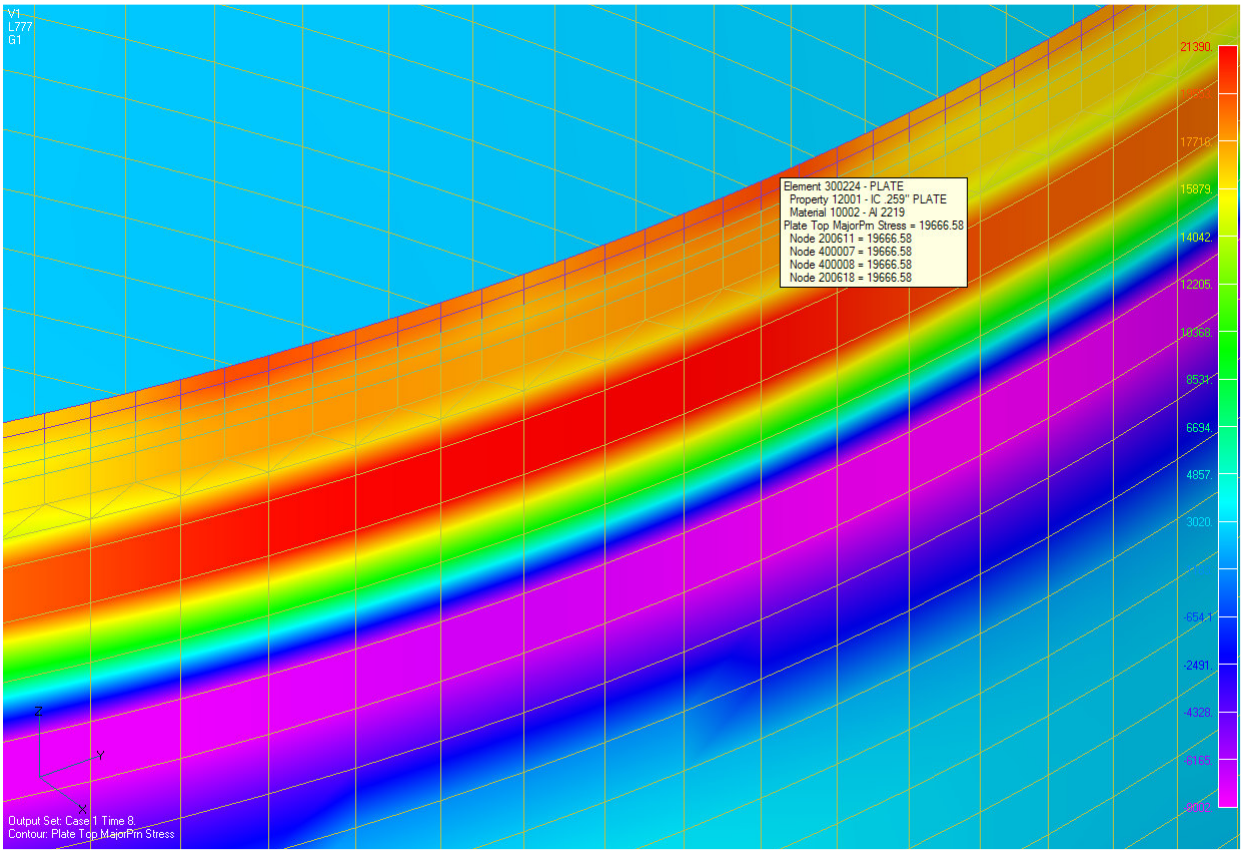

Figure 3.3.1-10: Load Case 1045 Maximum Weld Stress of 19666.58psi

INNER CYLINDER WELD

$Ftu := 32000\,psi$ Ultimate tensile strength Provided by Weld Testing conducted by Dan Rybicki. A copy of the weld allowables is shown on page C3-2.

$FSu := 1.4$ Ultimate Factor of Safety

$\gamma := 0.96$ Thermal reduction factor at 140 F.

$\sigma_{ult} := 19666.58\,psi$

Margin of Safety for Weld

Ultimate $MSu := \frac{\gamma \cdot Ftu}{\sigma_{ult} \cdot FSu} - 1$ $MSu = 0.116$

Inner Cylinder Analysis Conclusions

The inner Cylinder for the AMS-02 Vacuum Case is acceptable for the loading conditions defined in the ASM-02 Structural Verification Plan for STS and ISS(JSC-28792, Rev.B) and for a total payload weight of 15000lbs. There are several factors that could change the analysis for the Inner Cylinder. Among them is an increase in the mass of the magnet, helium tank or tracker. Other possible impacts to the current analysis , such as changes in inertial load factors due to updated transient analysis, will have to be assessed when they occur.

3.3.2 Inner Cylinder Stability Assessment

Prepared By	Name	Date		File Name
	Howard Carter	02/08/06		inner cylinder stability
Checked By	Chittur Bala		**Engineering and Science Contract Group** *Structural Analysis Section*	Draw ing No. SEG39135781
Title	AMS-02 Vacuum Case Inner Cylinder Stablity Analysis			

This analysis computes the stability of the AMS-02 Inner Cylinder, treating it as a specially orthotropic cylinder under hydrostatic compression.

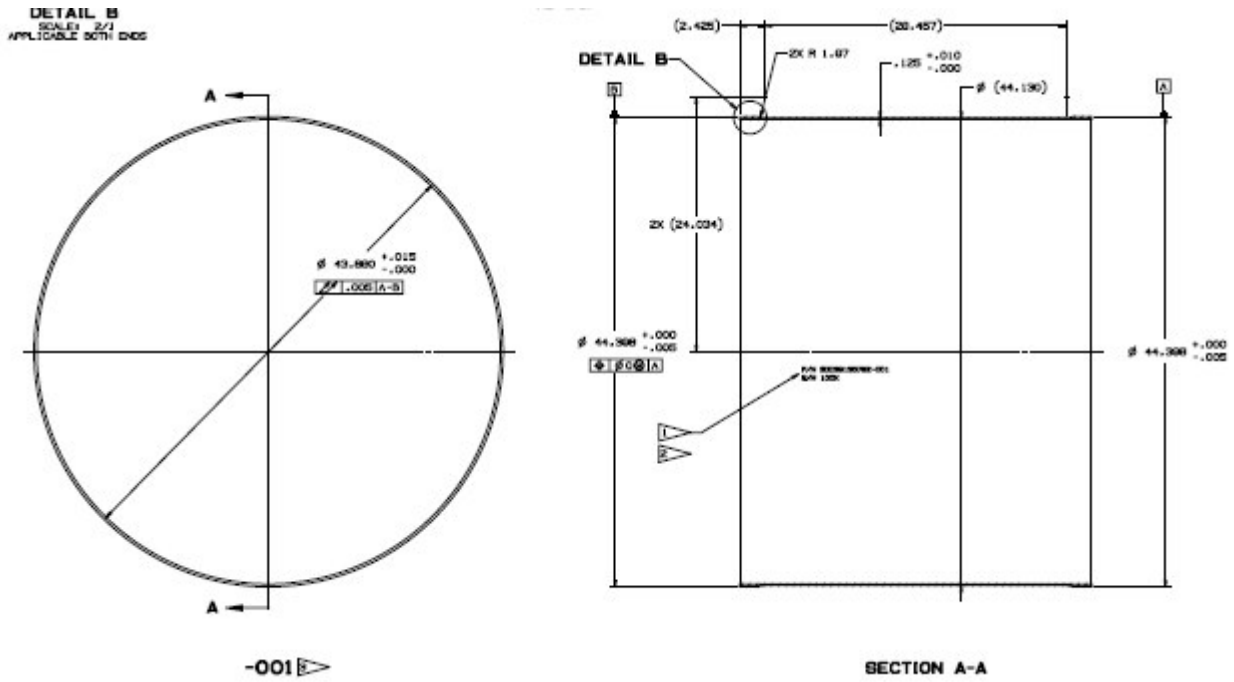

SDG39135782, Inner Cylinder, Stock

Cylinder is made of 2219-T852

$E := 10.4 \cdot 10^6 \cdot psi$ $\beta := .33$

Define the geometry

$L := 33.307 \cdot in$ (length of cylinder)

$Rosl := 22.074 \cdot in$ (radius of cylinder to the surface location-nominal radius plus nominal thickness)

$t := .13 \cdot in$ (average thickness of cylinder - dimension is 0.125" +.010 -.000)

$dref := 0.5 \cdot t$ (reference surface location)

$R := Rosl - dref$ $R = 22.009\,in$ (Cylinder radius to reference surface)

Use the yield factor of safety for AMS-02 $FSy := 1.1$

The applied hydrostatic pressure is defined as per the AMS SVP as being .8 atmospheres:

$$pressure := .8 \cdot 14.7 \cdot psi \qquad pressure = 11.76\,psi$$

Define the number of axial (m) and circumferential (n) waves. This analysis will check buckling for all combinations of these waves, and determine the mininum margin

$$M := 10 \qquad N := 20$$

Define: $u(m) := \left(m \cdot \frac{}{L}\right)^2 \qquad =(n) := \left(\frac{n}{R}\right)^2$

These will simplify the equations

Now, define the Constitutive coefficients as (see Almroth, eqn 5.74, noting that this case has no rings or stiffners so the s and r terms are zero).

$$C11 := \frac{E \cdot t}{1 - \beta^2} \qquad C11 = 1517225.901 \frac{lbf}{in}$$

$$C12 := \beta \cdot C11 \qquad C21 := C12 \qquad C12 = 500684.547 \frac{lbf}{in}$$

$$C22 := C11 \qquad C22 = 1517226 \frac{lbf}{in}$$

$$C33 := \frac{E \cdot t}{2 \cdot (1 + \beta)} \qquad C33 = 508271 \frac{lbf}{in}$$

$$C44 := \frac{E \cdot t^3}{12 \cdot \left(1 - \beta^2\right)} \qquad C44 = 2137\, in \cdot lbf$$

$$C55 := C44 \qquad C55 = 2137\, in \cdot lbf$$

$$C45 := \beta \cdot C44 \qquad C54 := C45 \qquad C45 = 705\, in \cdot lbf$$

$$C66 := (1 - \beta) \cdot \frac{E \cdot t^3}{12 \cdot \left(1 - \beta^2\right)} \qquad C66 = 1432\, in \cdot lbf$$

Using twice the twisting curvature based on the most common approach, the equation becomes:

$$C66 := \frac{1 - \beta}{2} \cdot \frac{E \cdot t^3}{12 \cdot \left(1 - \beta^2\right)} \qquad C66 = 715.815\, in \cdot lbf$$

Now, define (per Almroth, eqn 5.77)

$$A11(m,n) := C11\cdot\left(\frac{m\cdot}{L}\right)^2 + C33\cdot\left(\frac{n}{R}\right)^2 \qquad A11(1,1) = 3.949\times 10^9\,\frac{kg}{m^2\cdot s^2}$$

$$A12(m,n) := (C12 + C33)\cdot\frac{m\cdot}{L}\cdot\frac{n}{R} \qquad A12(1,1) = 1.174\times 10^9\,\frac{kg}{m^2\cdot s^2}$$

$$A13(m,n) := \frac{C12}{R}\cdot\frac{m\cdot}{L} \qquad A13(1,1) = 5.825\times 10^8\,\frac{kg}{m^2\cdot s^2}$$

$$A22(m,n) := C33\cdot\left(\frac{m\cdot}{L}\right)^2 + C22\cdot\left(\frac{n}{R}\right)^2 \qquad A22(1,1) = 2.078\times 10^9\,\frac{kg}{m^2\cdot s^2}$$

$$A23(m,n) := \frac{C22}{R}\cdot\frac{n}{R}$$

$$A33(m,n) := C44\cdot\left(\frac{m\cdot}{L}\right)^4 + 2\cdot(2\cdot C66 + C45)\cdot\left(\frac{m\cdot}{L}\right)^2\cdot\left(\frac{n}{R}\right)^2 + C55\cdot\left(\frac{n}{R}\right)^4 + \frac{C22}{R^2}$$

Now, define the matrices

$$a0(m,n) := \frac{\begin{pmatrix} A11(m,n) & A12(m,n) \\ A12(m,n) & A22(m,n) \end{pmatrix}}{\frac{lbf}{in^3}} \qquad a1(m,n) := \frac{\begin{pmatrix} A11(m,n) & A12(m,n) & A13(m,n) \\ A12(m,n) & A22(m,n) & A23(m,n) \\ A13(m,n) & A23(m,n) & A33(m,n) \end{pmatrix}}{\frac{lbf}{in^3}}$$

We're dividing by the units since below we need to take the deteminate of a matrix and in MathCAD the matrix must be unitless. Note that the determinate of a0 would have units of (lbf/in^3)^2 and a1 units of (lbf/in^3)^3

Create ranges for m and n, using maximum numbers defined above $m := 1..M$ $n := 1..N$

Now, solve for the pressure as a function of m and n. The division of determinates for a1 and a0 would result in units of lbf/in^3, so we'll mutliply by this to achive the correct pressure units.

$$qcl_{m,n} := \frac{1}{R\cdot\left(\frac{1}{2}\cdot u(m) + =(n)\right)}\cdot\frac{|a1(m,n)|}{|a0(m,n)|}\cdot\left(\frac{lbf}{in^3}\right)$$

The minimum pressure is therefore: $\min(qcl) = 17.833\,psi$

Now find the radial and circumferentical waves that gives the minimum pressure

$$m_min := \left(match(\min(qcl), qcl)_1\right)_1 \qquad m_min = 1$$

$$n_min := \left(match(\min(qcl), qcl)_1\right)_2 \qquad n_min = 8$$

From Almroth, the Batdorf parameter for cylinders with simply supported ends is given as:

$$Z := \frac{L^2}{R\cdot t}\cdot\sqrt{1-\beta^2} \qquad Z = 366.008$$

Figure 7.19 in Almroth shows a plot of Imperfection sensitivity of cylinders subjected to lateral pressure. This plot is shown below. For $Z = 366.008$, read the graph to get $\frac{a2}{1-y^2}$ which we'll give as

$a2cal := -0.0144$

Plotting data for figure hidden

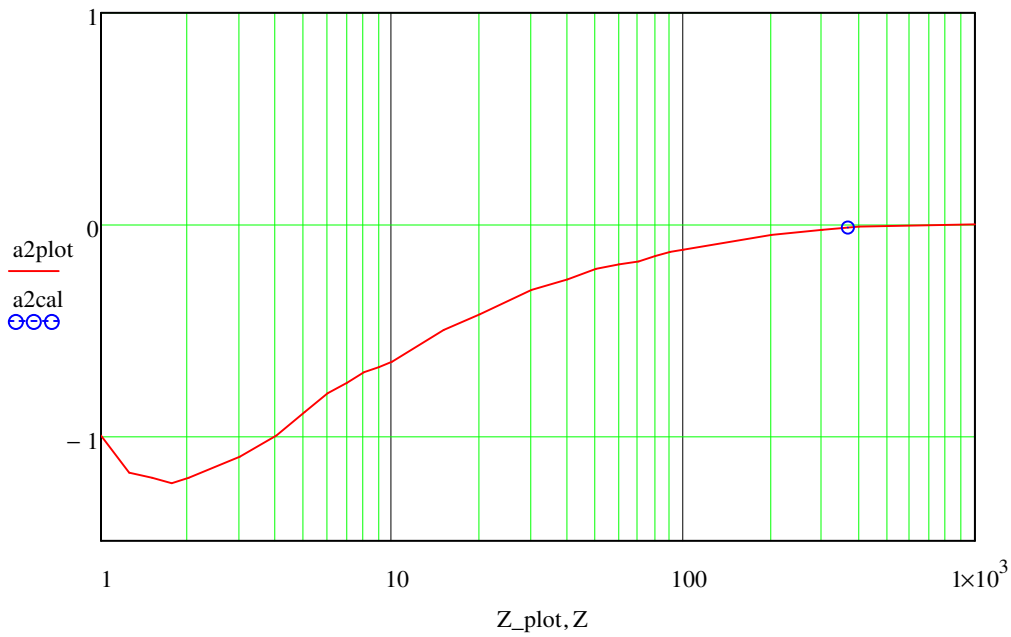

The above plot is shown again, this time zoomed in on the region we're interested in

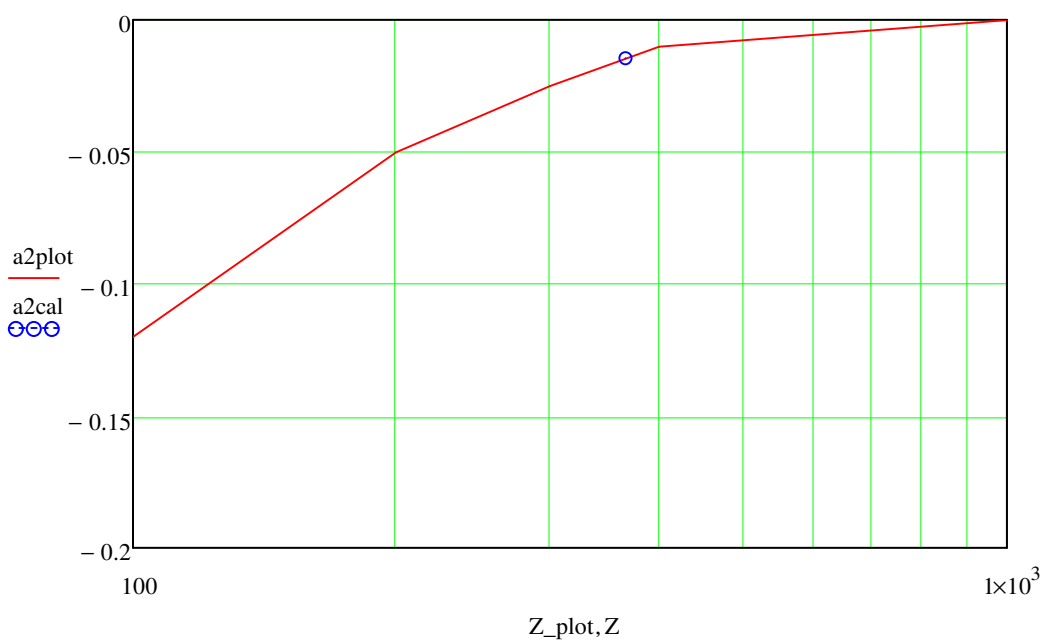

So, we can slove for a2 $a2 := a2cal \cdot \left(1 - \beta^2\right)$ $a2 = -0.01283$

If the initial imperfections are assumed to be in the form of a classical buckling mode, Almroth then gives an equation for the relationship among limiting point load, imperfection magnitude and the imperfection-sensitivity parameter a2

$$(1 - u)^{\frac{3}{2}} = \frac{(3)\cdot 3^{\frac{1}{2}}}{2} (-a2)^{\frac{1}{2}} \cdot u \cdot |, |$$

Eqn 7.55, page 256, Almroth

We'll solve this for λ, the ratio of applied pressure at the limit point to corresponding classical critical pressure.

First, find μ which is the ratio of imperfection amplitude to shell wall thickness.

Define: $\varepsilon := 0.025 \cdot in$ The maximum physical imperfection as specified in the design (see SDG39135782 tolerance on inner diameter is +.015 / tolerance on wall thickness is +.010)

So, the ratio is therefore: $, := \frac{\varepsilon}{t}$ $, = 0.192$

Use a MathCAD solve block to find λ

Guess: $u := .1$

Given

$$\frac{(3)\cdot 3^{\frac{1}{2}}}{2} (-a2)^{\frac{1}{2}} \cdot u \cdot |, | - (1 - u)^{\frac{3}{2}} = 0$$

$u := Find(u)$

$u = 0.866$

λ is then the Knock Down Factor to be used with the buckling pressure calculated above.

$Pcr := u \cdot min(qcl)$ $Pcr = 15.444\ psi$

The margin of safety is therefore:

$$MS := \frac{Pcr}{pressure \cdot FSy} - 1$$

$MS = 0.194$

3.4 Upper Support Ring

Margins of Safety

Table 3.4-1: Minimum Margin of Safety Summary

Part / Dwg Number	Part Name / Description	Material & Heat Treatment	Critical Load Condition	Failure Mode	Margin of Safety	Reference Page
SDG39135786	Upper Support Ring	AL ALY 7050-T7451	Launch	Yield	0.035 (u)	3.4-26

Factors of Safety

The hardware is designed with a yield factor of 1.1 and an ultimate factor of 1.4 against limit loads for Launch and Landing.

Description of Structure

Figure 3.4-1 below shows the location of Upper Support Ring in AMS-02. The Ring is machined from 7050-T7451 Aluminum Alloy Rolled Forging. It is attached to the Outer Cylinder with 192 bolts, and to the Conical Flange with 232 bolts. Eight Strap Ports are machined on the Ring to accommodate the magnet suspension straps. The Upper Support Ring has four Interface Plates for attachment of the USS-02.

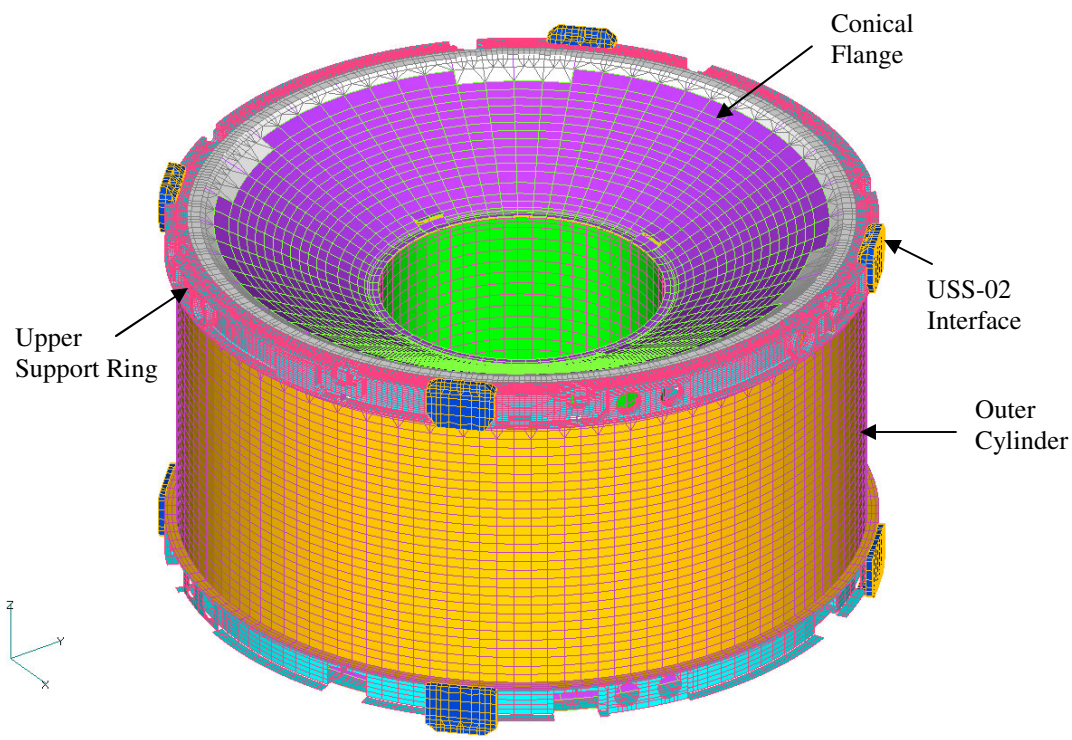

Figure 3.4-1: Location of Upper Support Ring in AMS-02

* Note that the above figure does not show USS-02 for clarity.

Description of Model

High Detail USS Flight Model

The high detail USS flight model is used for the stress analysis of the Upper Support Ring. This model is used to recover On-Orbit Loads as well as the base for all detailed Flight USS models. It includes the 5-07 loads model with high fidelity models integrated into it. These models include the Sill, Elbow, Lower USS and VC Interface Joints as well as the Keel Block. These models are used in previous flight stress analysis as separate models and were created for each joint. Since computer resources have improved, we now have the ability to run larger models. These models are combined into one model. This was done to save on the number of models required which reduces the total number of runs required saving both man hours and cpu time as well as reducing the possibilities of errors. This model is shown in Figure 3.4-2. The FEA model is called uss-8-07-high.MOD and is stored in the directory \\Escfil02\caduser\projects\edsug\ams\public\sangster\8-07\Flight FEMAP Models.

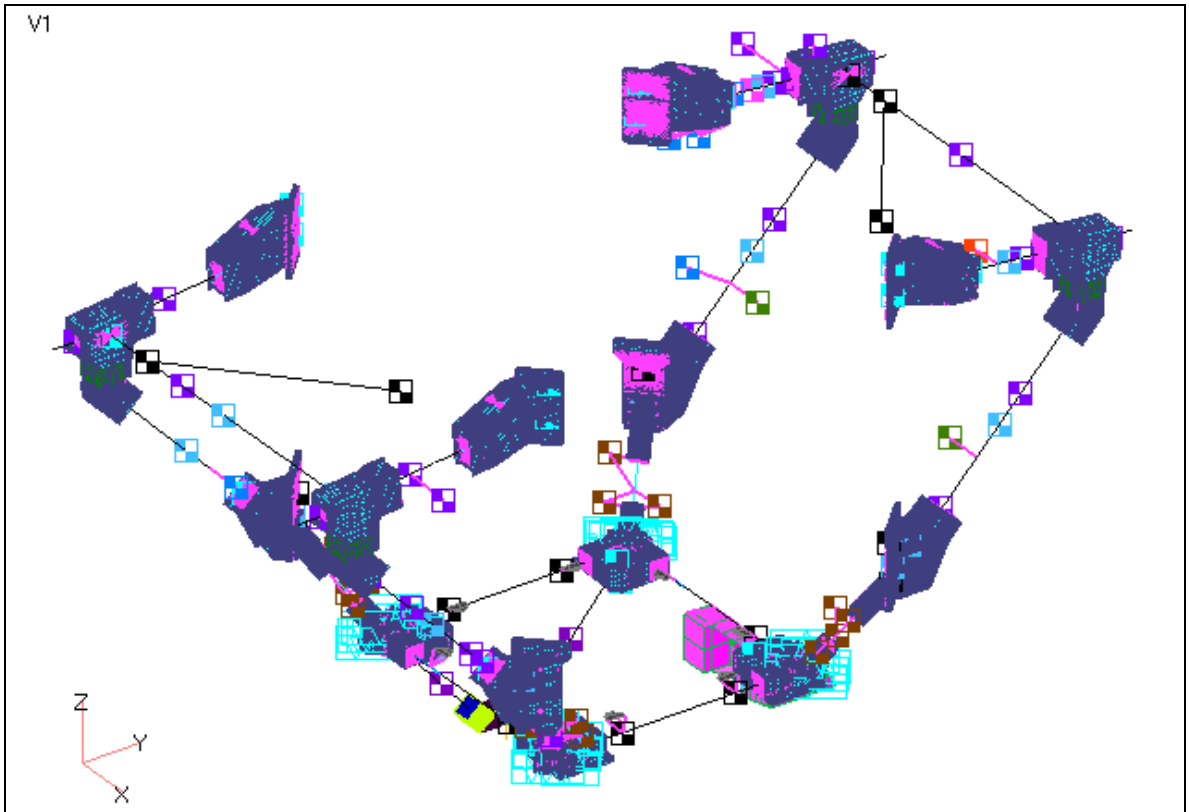

Figure 3.4-2: High Detail Full Flight USS Model

High Detail Flight Vacuum Case Model

The high detail Vacuum Case model is used for the stress analysis of the Upper Support Ring. This model is created by combining the stress models of the Upper Ring, Lower Ring, Conical Flange, Outer Cylinder, and Inner Cylinder into a single model. This model is shown in Figure 3.4-3.

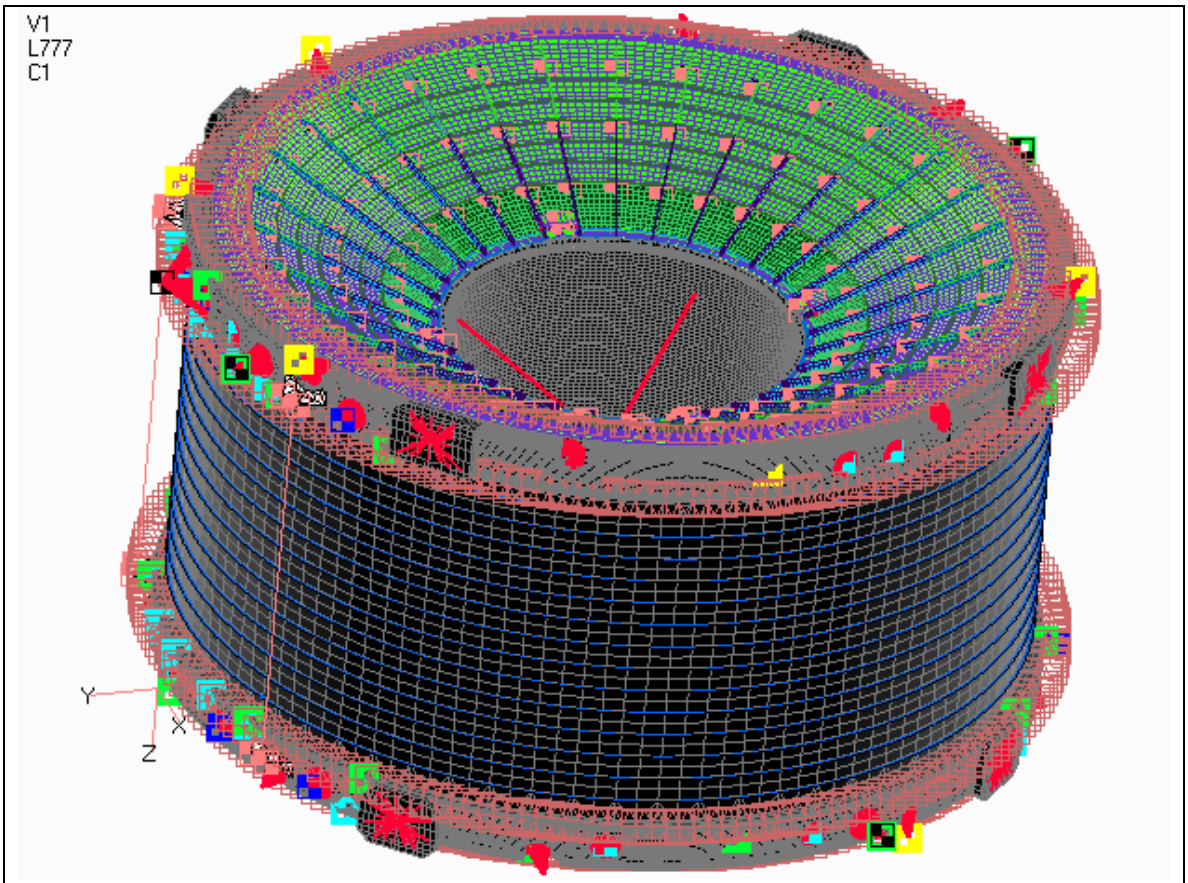

Figure 3.4-3: High Detail Flight VC

Model Checks

The model checks are documented in Section 4.11.1 of the AMS-02 Fatigue and Fracture report ESCG-4450-08-STAN-DOC-0115. The model checks correspond to Configuration 13 per the AMS-02 Fatigue and Fracture report ESCG-4450-08-STAN-DOC-0115. Configuration 13 consists of the flight and landing configurations of the AMS-02.

The input files for this run are listed in Table 3.4-2. Table 3.4-3 shows the files used to check that the RBE2 elements have modeling contact and not tension as intended. Table 3.4-4 lists the different VC models used for different load cases. The different models were created depending on what portion of the RBE2 elements are used for modeling contact for that load case. Table 3.4-6 lists the model files used for each load case. Model checks for both the constrained and unconstrained models are shown in Table 3.4-7. The fixed modes run shows that when the model is constrained it is fully constrained. The Strain Energy checks shown in Table 3.4-8 show the total strain energy.

Table 3.4 -2: Files used

Include file directory	Include File name	Description or Description Location
/ams/transport/bulk	vc-high.dat *Note 1	This Model 2.3.2. High Detail Flight
/ams/bulk/2-07	trd.dat	2-07 Loads Model - AMS Stress Report
/ams/bulk/2-07	trdgas.dat	2-07 Loads Model - AMS Stress Report
/ams/bulk/2-07	trdgas-spring.dat	2-07 Loads Model - AMS Stress Report
/ams/bulk/2-07	cab.dat	2-07 Loads Model - AMS Stress Report
/ams/bulk/2-07	ltof.dat	2-07 Loads Model - AMS Stress Report
/ams/bulk/2-07	ltof-bolts.dat	2-07 Loads Model - AMS Stress Report
/ams/bulk/2-07	ecal.dat	2-07 Loads Model - AMS Stress Report
/ams/bulk/2-07	ecal-bolts.dat	2-07 Loads Model - AMS Stress Report
/ams/bulk/2-07	ramradiator.dat	2-07 Loads Model - AMS Stress Report
/ams/bulk/2-07	wakeradiator.dat	2-07 Loads Model - AMS Stress Report
/ams/bulk/2-07	utof.dat	2-07 Loads Model - AMS Stress Report
/ams/bulk/2-07	utof-bolts.dat	2-07 Loads Model - AMS Stress Report
/ams/bulk/2-07	rich.dat	2-07 Loads Model - AMS Stress Report
/ams/bulk/2-07	rich-bolts.dat	2-07 Loads Model - AMS Stress Report
/ams/transport/bulk	trdgas-high-connect.dat	This file contains the bracket connecting the TRD Gas to the Joint
/ams/transport/bulk	uss-high-rbemixed-rbe2.dat	Vacuum Cash Shipping Fixture Stress Report
/ams/bulk/2-07	pas.dat	2-07 Loads Model - AMS Stress Report
/ams/bulk/2-07	preload.dat	2-07 Loads Model - AMS Stress Report
/ams/bulk/2-07	hetank-empty.dat	2-07 Loads Model - AMS Stress Report
/ams/bulk/2-07	magnet.dat	2-07 Loads Model - AMS Stress Report
/ams/bulk/2-07	nlstraps.dat	2-07 Loads Model - AMS Stress Report
/ams/bulk/2-07	parame.dat	2-07 Loads Model - AMS Stress Report
/ams/bulk/2-07	ip-uss-springs.dat	2-07 Loads Model - AMS Stress Report

Include file directory	Include File name	Description or Description Location
/ams/transport/bulk	ip-vc-springs.dat	2-04 Loads Model VC interface Springs
/ams/bulk/2-07	mpc2.dat	2-07 Loads Model - AMS Stress Report
/ams/bulk/2-07	mpc3.dat	2-07 Loads Model - AMS Stress Report
/ams/bulk/2-07	mpc4.dat	2-07 Loads Model - AMS Stress Report
/ams/bulk/2-07	spc1.dat	2-07 Loads Model - AMS Stress Report
/ams/bulk/2-07	spc2.dat	2-07 Loads Model - AMS Stress Report
/ams/bulk/2-07	spc3.dat	2-07 Loads Model - AMS Stress Report
/ams/bulk/2-07	spc4.dat	2-07 Loads Model - AMS Stress Report
/ams/bulk/2-07	cord.dat	2-07 Loads Model - AMS Stress Report
/ams/bulk/2-07	temp-warm.dat	2-07 Loads Model - AMS Stress Report
/ams/bulk/2-07	temp-cold.dat	2-07 Loads Model - AMS Stress Report
/ams/transport/bulk	elbo-rsscon.dat	RSSCON Cards Pulled from same location as joint described in this report
/ams/transport/bulk	loweruss-resscon.dat	RSSCON Cards Pulled from same location as joint described in this report
/ams/transport/bulk	sill-rsscon.dat	RSSCON Cards Pulled from same location as joint described in this report
/ams/transport/bulk	vc-rsscon.dat	RSSCON Cards Pulled from same location as joint described in this report
/ams/transport13-fulltest/	job-modal-flight-h	Job File

The VC is modeled using RBE2 elements to represent the compressive contact between the Rings and Outer Cylinder as well as the Rings and conical flange. For other configurations, this is realistic since the inertia loads do not overcome the compressive pressure load. For liftoff and landing, the inertia load overcomes the compressive load in some elements. This means that the RBE2 is experiencing a tensile load when it should only be experiencing a compressive load. To correct for this, an iterative process was used in which the RBE2 elements were removed and runs were redone until all remaining RBE2 elements only carried compressive loads. This check was made using Naspost and files are listed in Table 3.4-2. The modes and frequencies shown are for the initial run with all RBE2 elements. It was found that the frequencies did not shift much with the minimal number of RBE2 elements removed.

Table 3.4-3: Naspost RBE2 Compression Check

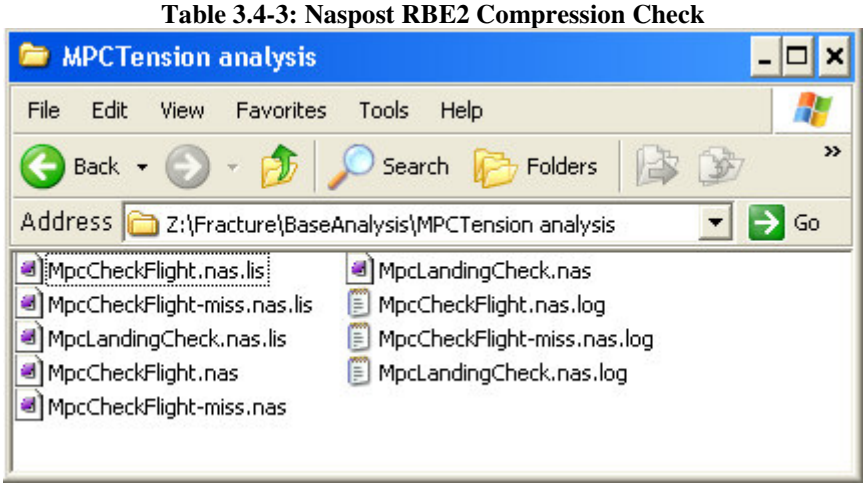

Table 3.4-4: VC Model Files

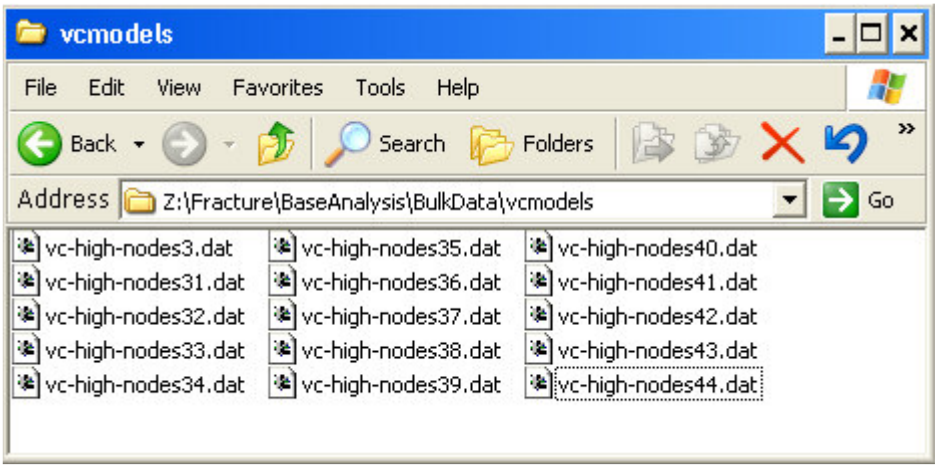

Table 3.4-5: Configuration 13 Job File List

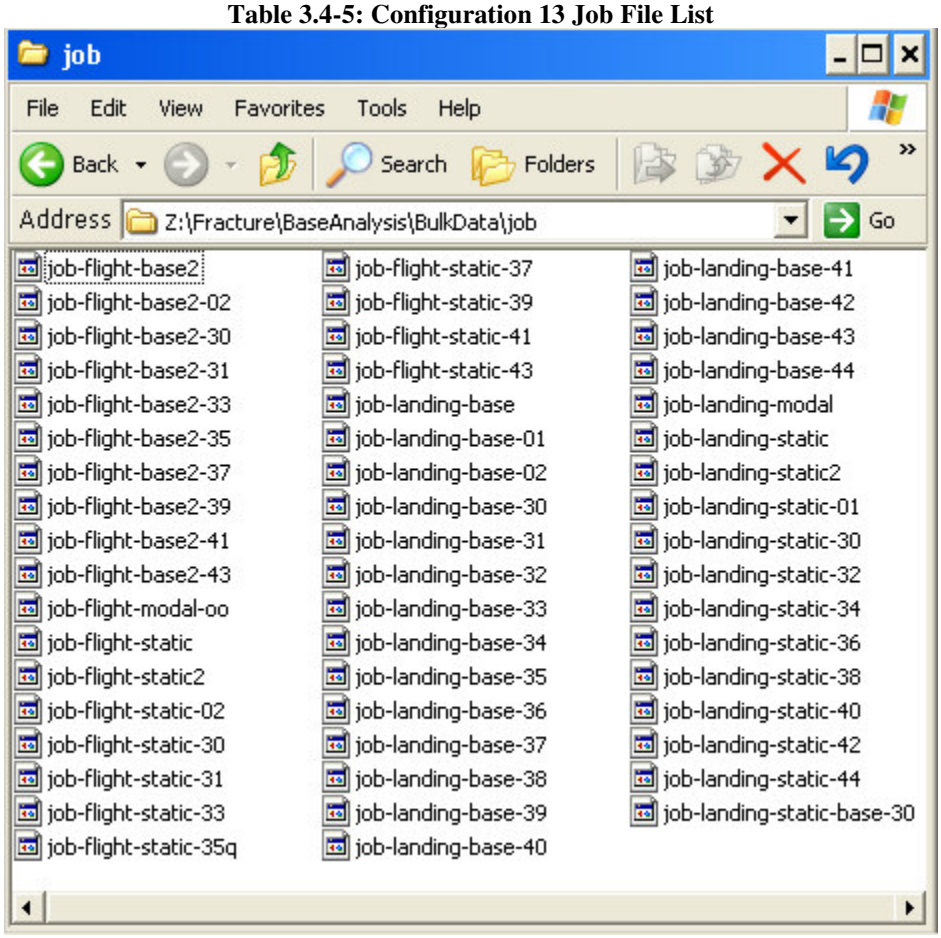

Table 3.4-6: Configuration 13 File list

Final Run Name	Load Case	VC model	Final Run Name	Load Case	VC model
13-high-flight-35-1001	1001	35	13-high-landing-34-2001	2001	34
13-high-flight-35-1002	1002	35	13-high-landing-34-2002	2002	34
13-high-flight-43-1003	1003	43	13-high-landing-42-2003	2003	42
13-high-flight-37a-1004	1004	37	13-high-landing-42-2004	2004	42
13-high-flight-35-1005	1005	35	13-high-landing-36-2005	2005	36
13-high-flight-35-1006	1006	35	13-high-landing-34-2006	2006	34
13-high-flight-37a-1007	1007	37	13-high-landing-40a-2007	2007	40
13-high-flight-37a-1008	1008	37	13-high-landing-40a-2008	2008	40
13-high-flight-35-1009	1009	35	13-high-landing-34-2009	2009	34
13-high-flight-35-1010	1010	35	13-high-landing-34-2010	2010	34
13-high-flight-37a-1011	1011	37	13-high-landing-34-2011	2011	34
13-high-flight-39a-1012	1012	39	13-high-landing-34-2012	2012	34
13-high-flight-35-1013	1013	35	13-high-landing-34-2013	2013	34
13-high-flight-37a-1014	1014	37	13-high-landing-34-2014	2014	34
13-high-flight-37a-1015	1015	37	13-high-landing-34-2015	2015	34
13-high-flight-39a-1016	1016	39	13-high-landing-36-2016	2016	36
13-high-flight-39a-1017	1017	39	13-high-landing-38-2017	2017	38
13-high-flight-39a-1018	1018	39	13-high-landing-40a-2018	2018	40
13-high-flight-41-1019	1019	41	13-high-landing-42-2019	2019	42
13-high-flight-41-1020	1020	41	13-high-landing-40a-2020	2020	40
13-high-flight-43-1021	1021	43	13-high-landing-40a-2021	2021	40
13-high-flight-41-1022	1022	41	13-high-landing-38-2022	2022	38
13-high-flight-41-1023	1023	41	13-high-landing-40a-2023	2023	40
13-high-flight-43-1024	1024	43	13-high-landing-40a-2024	2024	40
13-high-flight-37a-1025	1025	37	13-high-landing-34-2025	2025	34
13-high-flight-37a-1026	1026	37	13-high-landing-34-2026	2026	34
13-high-flight-41-1027	1027	41	13-high-landing-34-2027	2027	34
13-high-flight-37a-1028	1028	37	13-high-landing-34-2028	2028	34
13-high-flight-39a-1029	1029	39	13-high-landing-34-2029	2029	34
13-high-flight-39a-1030	1030	39	13-high-landing-34-2030	2030	34
13-high-flight-39a-1031	1031	39	13-high-landing-34-2031	2031	34
13-high-flight-37a-1032	1032	37	13-high-landing-34-2032	2032	34
13-high-flight-41-1033	1033	41	13-high-landing-40a-2033	2033	40
13-high-flight-41-s-1034	1034	41	13-high-landing-44-2034	2034	44
13-high-flight-35-1035	1035	35	13-high-landing-36-2035	2035	36
13-high-flight-35-1036	1036	35	13-high-landing-40a-2036	2036	40
13-high-flight-39a-1037	1037	39	13-high-landing-40a-2037	2037	40
13-high-flight-39a-1038	1038	39	13-high-landing-40a-2038	2038	40
13-high-flight-35-1039	1039	35	13-high-landing-36-2039	2039	36
13-high-flight-35-1040	1040	35	13-high-landing-34-2040	2040	34

Final Run Name	Load Case	VC model
13-high-flight-35-1041	1041	35
13-high-flight-35-1042	1042	35
13-high-flight-35-1043	1043	35
13-high-flight-35-1044	1044	35
13-high-flight-35-1045	1045	35
13-high-flight-35-1046	1046	35
13-high-flight-35-1047	1047	35
13-high-flight-35-1048	1048	35
13-high-flight-43-1049	1049	43
13-high-flight-43-1050	1050	43
13-high-flight-39a-1051	1051	39
13-high-flight-39a-1052	1052	39
13-high-flight-43-1053	1053	43
13-high-flight-43-1054	1054	43
13-high-flight-41-1055	1055	41
13-high-flight-39a-1056	1056	39
13-high-flight-39a-1057	1057	39
13-high-flight-39a-1058	1058	39
13-high-flight-35-1059	1059	35
13-high-flight-35-1060	1060	35
13-high-flight-39a-1061	1061	39
13-high-flight-39a-1062	1062	39
13-high-flight-35-1063	1063	35
13-high-flight-35-1064	1064	35

Final Run Name	Load Case	VC model
13-high-landing-38-2041	2041	38
13-high-landing-38-2042	2042	38
13-high-landing-34-2043	2043	34
13-high-landing-38-2044	2044	38
13-high-landing-38-2045	2045	38
13-high-landing-38-2046	2046	38
13-high-landing-34-2047	2047	34
13-high-landing-38-2048	2048	38
13-high-landing-42-2049	2049	42
13-high-landing-42-2050	2050	42
13-high-landing-38-2051	2051	38
13-high-landing-40a-2052	2052	40
13-high-landing-44-2053	2053	44
13-high-landing-44-2054	2054	44
13-high-landing-38-2055	2055	38
13-high-landing-36-2056	2056	36
13-high-landing-38-2057	2057	38
13-high-landing-38-2058	2058	38
13-high-landing-34-2059	2059	34
13-high-landing-34-2060	2060	34
13-high-landing-40a-2061	2061	40
13-high-landing-38-2062	2062	38
13-high-landing-34-2063	2063	34
13-high-landing-34-2064	2064	34

Table 3.4-7: Modes Frequency Fixed

Cycles (Hz)	Tran X	Tran Y	Tran Z	Rot X	Rot Y	Rot Z
4.40	0.00	0.36	0.00	0.36	0.00	0.00
6.30	0.00	0.00	0.13	0.00	0.00	0.00
7.68	0.00	0.00	0.00	0.00	0.00	0.16
8.88	0.70	0.00	0.00	0.00	0.66	0.00
9.52	0.00	0.00	0.00	0.00	0.00	0.00
9.96	0.00	0.00	0.00	0.00	0.00	0.00
11.63	0.00	0.00	0.00	0.00	0.00	0.00
11.94	0.00	0.00	0.00	0.00	0.00	0.00
12.00	0.00	0.60	0.00	0.59	0.00	0.00
12.80	0.00	0.00	0.00	0.00	0.00	0.00
13.17	0.00	0.00	0.00	0.00	0.00	0.00
13.28	0.06	0.00	0.03	0.00	0.03	0.00
14.43	0.00	0.00	0.00	0.00	0.00	0.00
14.51	0.00	0.00	0.23	0.00	0.00	0.00
14.97	0.06	0.00	0.05	0.00	0.06	0.00
17.76	0.00	0.00	0.00	0.00	0.00	0.00
22.30	0.00	0.00	0.00	0.00	0.00	0.00
22.96	0.02	0.00	0.20	0.00	0.03	0.00
23.86	0.00	0.00	0.00	0.00	0.00	0.00
24.42	0.01	0.00	0.05	0.00	0.02	0.03
24.79	0.00	0.00	0.00	0.00	0.00	0.00
25.05	0.00	0.00	0.00	0.00	0.00	0.00
25.25	0.00	0.00	0.00	0.00	0.00	0.00
26.21	0.02	0.00	0.03	0.00	0.02	0.05
26.48	0.00	0.00	0.00	0.00	0.00	0.00
27.42	0.04	0.00	0.14	0.00	0.04	0.01
27.60	0.00	0.00	0.00	0.00	0.00	0.00
27.69	0.00	0.00	0.00	0.00	0.00	0.00
28.26	0.01	0.00	0.01	0.00	0.01	0.00
28.49	0.00	0.00	0.00	0.00	0.00	0.01
29.29	0.05	0.00	0.01	0.00	0.07	0.10
30.37	0.00	0.00	0.00	0.00	0.00	0.00
30.57	0.00	0.01	0.00	0.01	0.00	0.15
31.11	0.00	0.00	0.00	0.00	0.00	0.00
31.20	0.00	0.00	0.00	0.00	0.00	0.00
31.54	0.00	0.00	0.00	0.00	0.00	0.03
32.04	0.00	0.00	0.00	0.00	0.00	0.00
32.88	0.00	0.00	0.00	0.00	0.00	0.00
32.93	0.00	0.00	0.00	0.00	0.00	0.00
34.06	0.00	0.00	0.01	0.00	0.00	0.00
34.10	0.00	0.00	0.01	0.00	0.00	0.00

Cycles (Hz)	Tran X	Tran Y	Tran Z	Rot X	Rot Y	Rot Z
34.56	0.00	0.00	0.00	0.00	0.00	0.00
34.64	0.00	0.00	0.00	0.00	0.00	0.22

Table 3.4-8: Strain Energy Check

DOF	G-SET
1	5.8E-06
2	4.3E-06
3	4.1E-06
4	7.6E-01
5	8.0E-01
6	2.5E-03

Material and Temperature

The Upper Support Ring is 7050-T7451 Aluminum Alloy. Material properties of 7050-T7451 are taken from *MIL-HDBK-5H, Table 3.7.3.0(d) for thickness of 5.001"-6.000"*. Temperature limits are based upon *Bolted Interface Temperatures* worksheet provided by Thermal Group. For Launch condition, the temperature of 120°F is applied. For Abort Landing condition, the temperature of 150°F is applied.

Analysis

The critical stresses for the Upper Support Ring are compared to the ultimate and yield strength of 7050-T7451 Aluminum Alloy. The following stress analysis method was used in the fracture and fatigue assessment and will be incorporated in the stress analysis.

The updated model was used with data sorted for every configuration individually. The previous stress analysis that Peter Hoang performed is replaced with the stress analysis performed by Chris Sangster. Figure 3.4-4 shows the rings in relation to the VC.

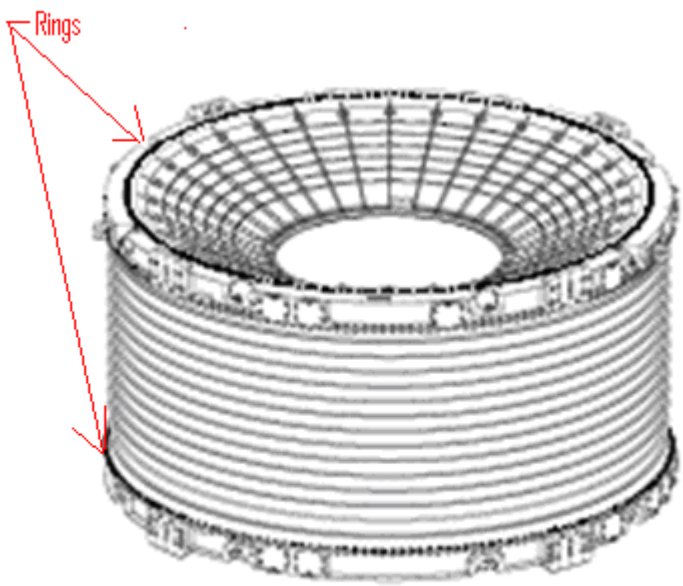

Figure 3.4-4: View of Vacuum Case

VC Upper Support Ring Stress analysis

Drawing Number : SDG39135786
Material Properties : 7050-T7451 AL ALY, AMS 4108
(Ref. MIL-HDBK-5H, Table 3.7.3.0(d) for thickness of 5.001"-6.000")
Allowable tensile Stress Ftu: 66 ksi
Ultimate Factor of Safety FSu: 1.4

For each Load Condition
1.) the Max Temp. was determined.
2.) yu(temp correction factor) was obtained from MIL-HDBK-5H, Figure 3.7.3.2.1
3.) Corrected Ftu was calculated using Ftu=Ftu*yu
4.) The stress required to create a margin of zero was calculated. Zero Margin Stress=Ftu*yu/FSu
5.) Fatigue Critical Stress was calculated using Fatigue Critical Stress=Ftu*yu*.3

These calculations are shown in the below in Table 3.4-9: Zero Margin Stress.

Table 3.4-9: Zero Margin Stress

Ftu	66000	PSI			
Fsu	1.4				
Units	deg F	NA	PSI	PSI	PSI
Location	**Temp**	**γu**	**Corrected Ftu**	**Zero Margin Stress**	**Fatigue Critical stress**
Launch:	120	0.95	62700	44786	18810
Abort Landing:	150	0.91	60060	42900	18018
Transportation:	94	0.98	64680	46200	19404
On-Orbit	150	0.91	60060	42900	18018

Principle Stress in all elements was recovered and sorted.

1.) Max Principle stress for each element type was recovered.
2.) Elements with stress above Zero Margin Stress were recovered
3.) Elements with stress exceeding the Fatigue Critical Stress were recovered from the Nastran results using Naspost.

Table 3.4-10 shows the max principal stress for each element type, recovered from Naspost. Elements stresses that show negative margins are highlighted in yellow.

Table 3.4-10: Element Recovered Stress

	Quad	Tri	Hex	Penta	TetA
	Recovered				
Units	PSI	PSI	PSI	PSI	PSI
Location	Max ABS Principle Stress				
Launch:	23938	30860	112923	24092	25445
Abort Landing:	24507	31544	62930	18640	16535
Transportation:	19476	24678	67626	18960	17300
On-Orbit	453	392	4249	2029	984

The elements recovered in Naspost were imported into FEMAP and shown in Figure 3.4-4 and Figure 3.4-6. Figure 3.4-5 is a close up view showing one area of the O-ring lip with negative margins. All other areas on the O-ring lip look similar. Figure 3.4-6 shows all the elements around the ring with negative margins. These elements are shown in blue.

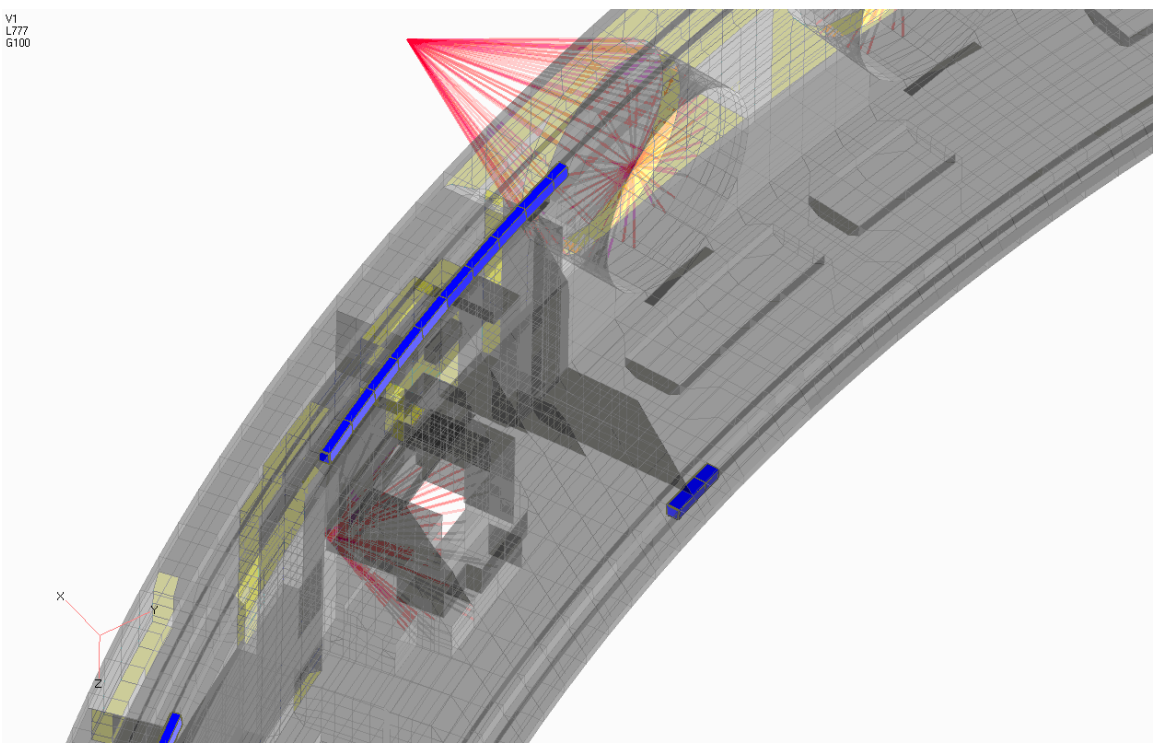

Figure 3.4-5: Close Up of O-ring Elements on the VC Ring with Negative Margins

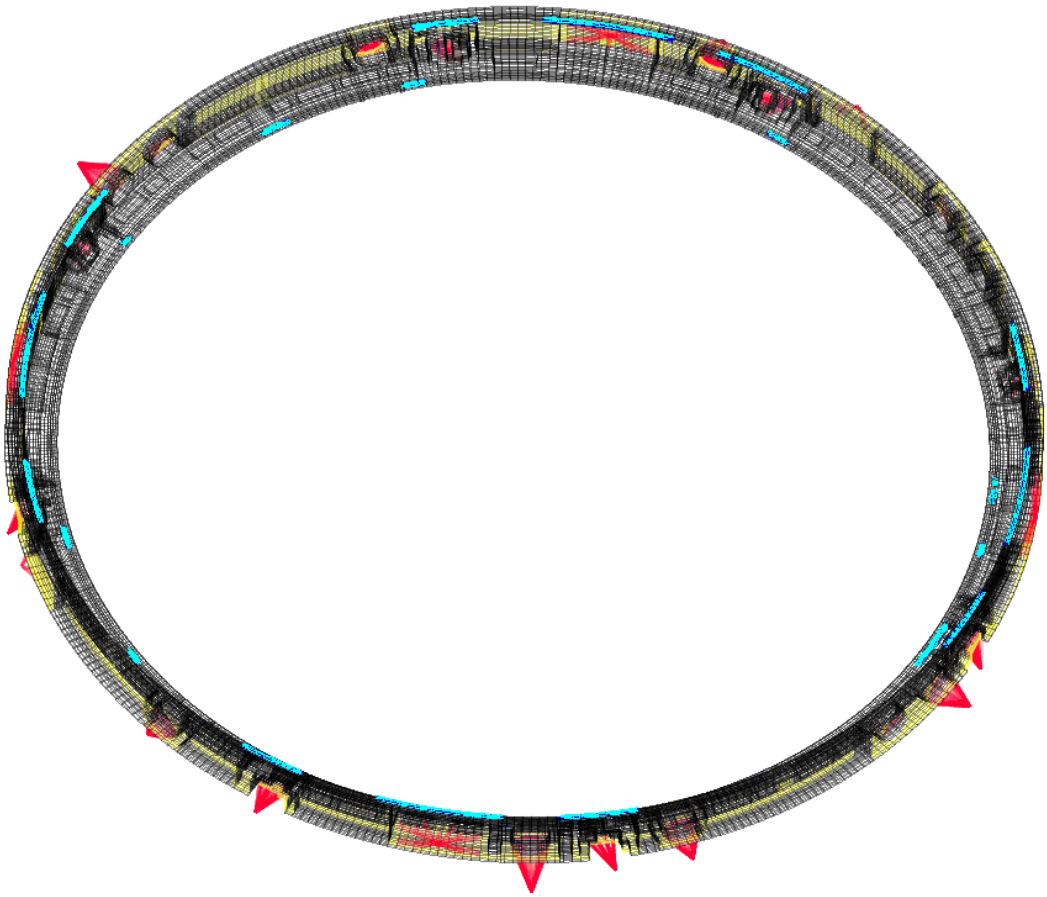

Figure 3.4-6: Elements with Negative Margins, on the O-ring Lip of the VC Ring

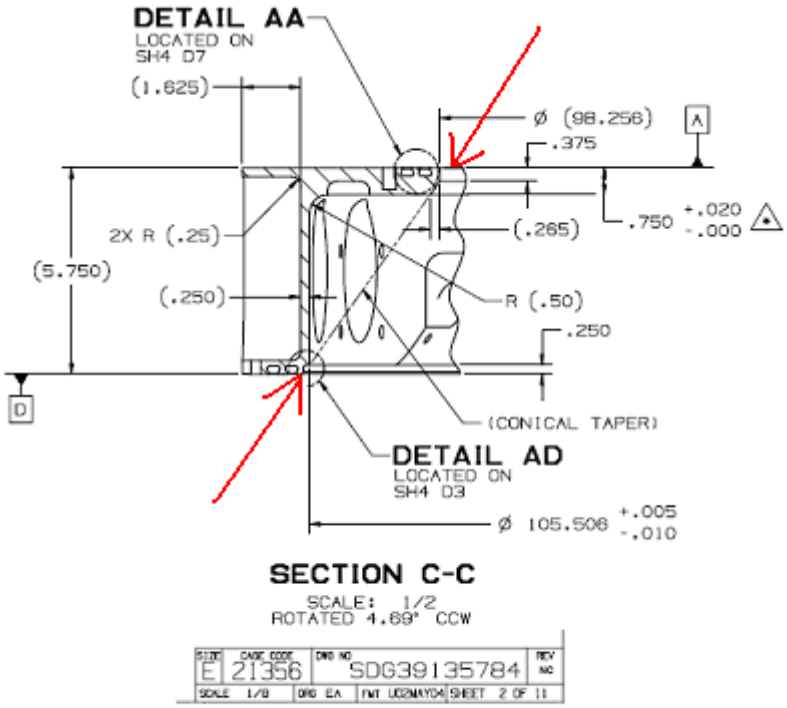

Figure 3.4-7: A Cross Section of the O-ring Lip

The arrows shown in Figure 3.4-7 point to the areas of concern at locations where a RBE2 element was used to model the contact on the lip. The RBE2 element is shown in light orange with a red arrow pointing to it in Figure 3.4-8.

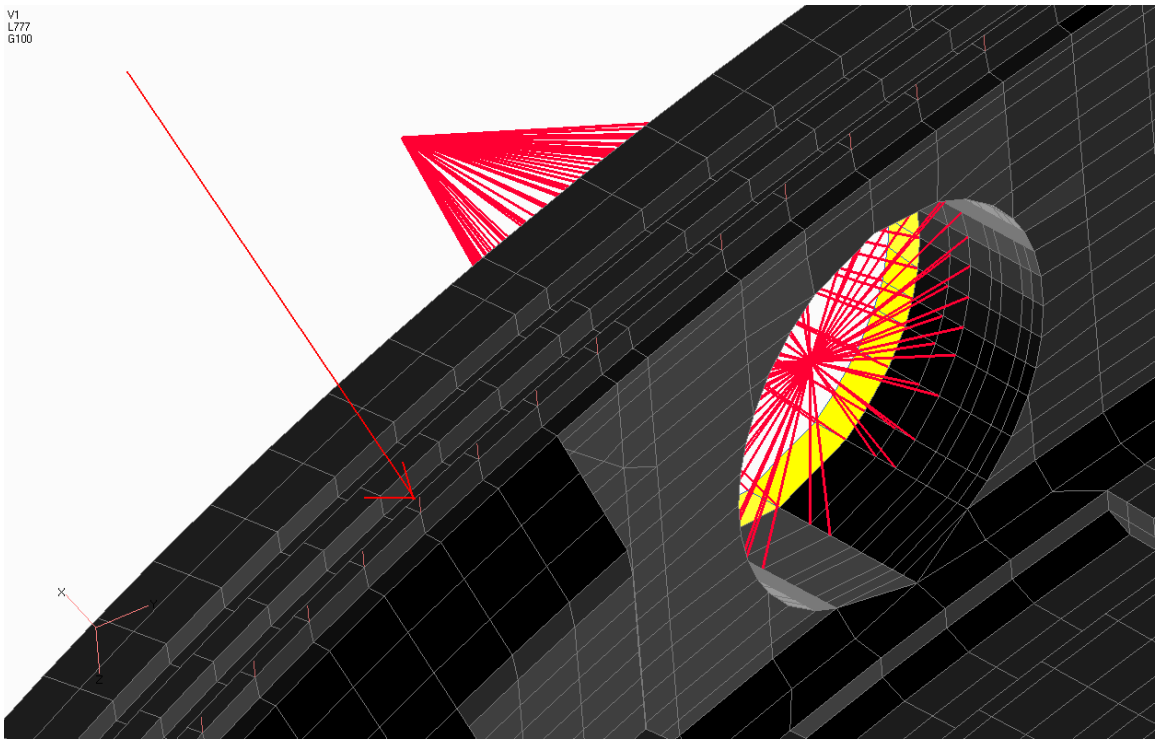

Figure 3.4-8: Sample with the RBE2 Elements Representing Contact on the VC Rings

The following statements explain the reasons for the high stresses and the rationale for ignoring these high stresses.

1. RBE2 element can cause artificially high stresses.
2. The elements surrounding the RBE2 elements do not have high stresses or negative margins.
3. Hand calculations show that the stress due to the compressive load is much lower than the zero margin stress. Refer to Table 3.4-13.
4. The O-ring's at these locations are being compressed and shares some of the load. This was not modeled and makes the analysis conservative.
5. If a local deformation occurred no failure would occur and the load would simply distribute to a larger portion of the ring.

Stress of Surrounding Elements

Table 3.4-11 shows elements surrounding the hexagonal element 8007579 which showed a stress of 112.923 ksi in Table 3.4-10 for the launch case. The highest element stress now is 31.4 ksi on element 8012522.

Table 3.4-11: Stress of Elements Surrounding Element 8007579

ID	SUBCASE	MAX-MAX-PRIN	MAX-MIN-PRIN	ABS MAX
8007580	1049	7615	28919	28919
8012521	1049	13405	4129	13405
8012522	1049	9513	31401	31401
8023506	1049	13151	4593	13151
8023509	1049	4042	4283	4283
8023511	1049	7633	6179	7633
8070079	1049	10596	5599	10596
8070082	1049	6600	28870	28870
8070084	1049	7711	30332	30332

Hand Calculations Showing the Max Stress Due to the Load Recovered from the RBE2 Element.

The stress was calculated using Stress=Force/Area. Table 3.4-12 shows two red boxes each representing the area used in this calculation for the RBE2 element inside the red box.

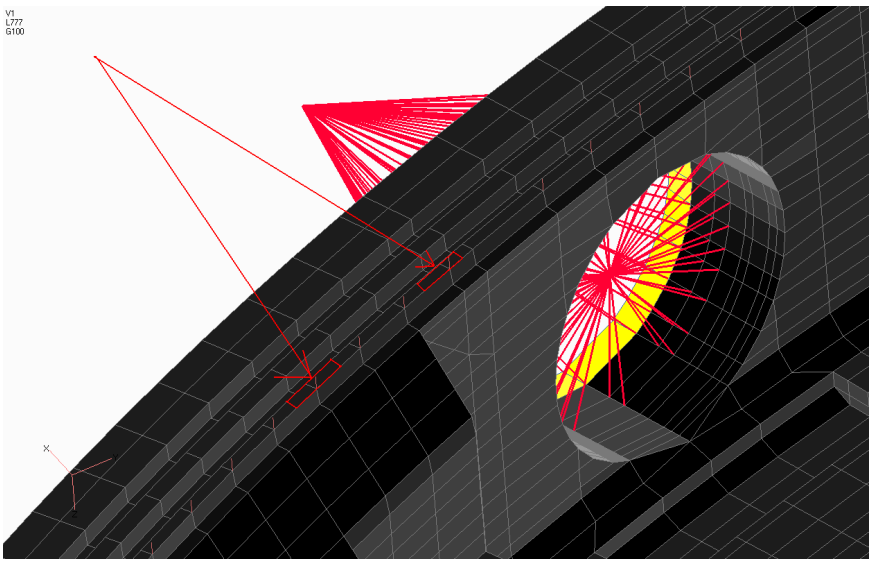

Figure 3.4-9: Area for Stress Hand Calculation

The area used was half the area of the elements on either side of the RBE2 element. The elements were one of 4 general sizes. For each size element the area was calculated from a length and width; assuming the elements were rectangles. The calculations are shown in Table 3.4-12.

Table 3.4-12: Element area calculations

Width(in)	Length(in)	Area(in^2)	Element size
0.1622	0.43254	0.070158	Small Top Elements
0.1622	0.86691	0.140613	Top Elements
0.2546	0.40837	0.103971	Lower small
0.2546	0.81665	0.207919	Bottom Elements

To show this more clearly the RBE2 element loads were recovered for all nodes on elements in question. The Calculations are shown in Table 3.4-13. Steps in this calculation are as follows:

1.) For each RBE2 element the Load was recovered
2.) Elements connected to RBE2 elements were found
3.) For each solid element the size was determined
4.) The area of each element was found
5.) The stress was calculated using
    Stress=Load/[("Element 1 Area"+"Element 2 Area")/2]

Table 3.4-13: Compressive stress calculations

Min		-3527							
Max		1634							
		lbf					Max Compresive stress		16965
GRID ID	LoadCase	Load	Element ID	Element ID2	Element Area	Element Area	Area (in^2)	Area (in^2)	Stress (psi)
8082126	1049	-3527	8070081	8007579	Bottom Elements	Bottom Elements	0.21	0.21	16965
8082126	1053	-3490	8070081	8007579	Bottom Elements	Bottom Elements	0.21	0.21	16785
8082126	1050	-3441	8070081	8007579	Bottom Elements	Bottom Elements	0.21	0.21	16548
8082126	1054	-3399	8070081	8007579	Bottom Elements	Bottom Elements	0.21	0.21	16346
8082126	1057	-3129	8070081	8007579	Bottom Elements	Bottom Elements	0.21	0.21	15048
704123	7001	1565	8025863	8025757	Top Elements	Top Elements	0.14	0.14	11130
704022	7007	1566	8022153	8022259	Top Elements	Top Elements	0.14	0.14	11140
704179	7008	1570	8081536	8081508	Top Elements	Top Elements	0.14	0.14	11164
704110	7004	1579	8077627	8077599	Top Elements	Top Elements	0.14	0.14	11226
704083	7002	1585	8085073	8085045	Top Elements	Top Elements	0.14	0.14	11270
704014	7006	1586	8088580	8088608	Top Elements	Top Elements	0.14	0.14	11279
704110	7004	1592	8077627	8077599	Top Elements	Top Elements	0.14	0.14	11325
704083	7002	1594	8085073	8085045	Top Elements	Top Elements	0.14	0.14	11333
704022	7007	1601	8022153	8022259	Top Elements	Top Elements	0.14	0.14	11383
704014	7006	1613	8088580	8088608	Top Elements	Top Elements	0.14	0.14	11474
704014	7006	1634	8088580	8088608	Top Elements	Top Elements	0.14	0.14	11624

Elements hidden ~26200 rows skipped

As you can see, when applying the hand calculations, the stresses reduce significantly. In order to recover stresses from the VC Ring FE model, several elements were removed from the NASPOST sort. The reason why the elements were omitted is because if the hand calculations are applied for each of these elements, the stress would also reduce significantly. Figure 3.4-10 and Figure 3.4-11 show a picture of the location where the elements were omitted. The elements omitted are in a straight row around the ring.

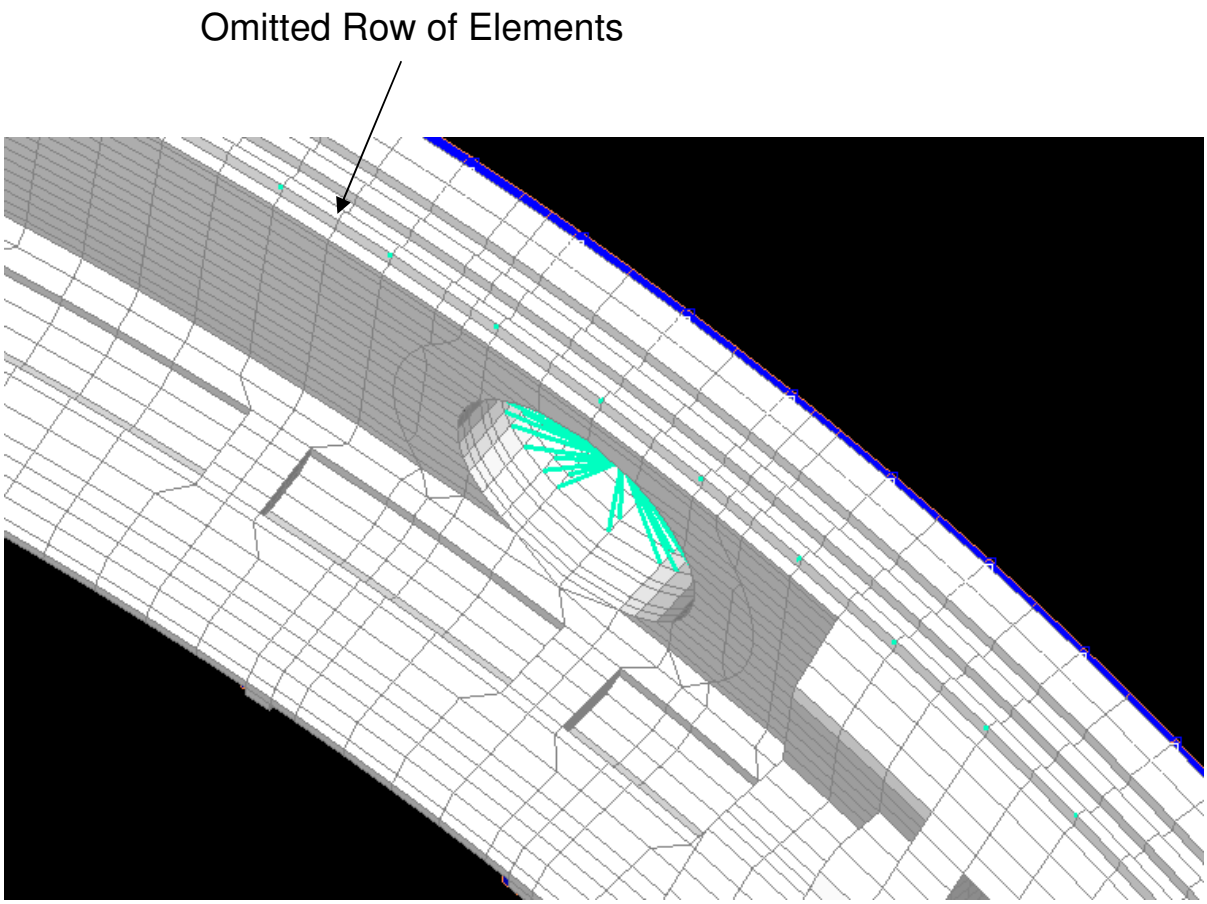

Figure 3.4-10: Omitted Elements on Upper Support Ring

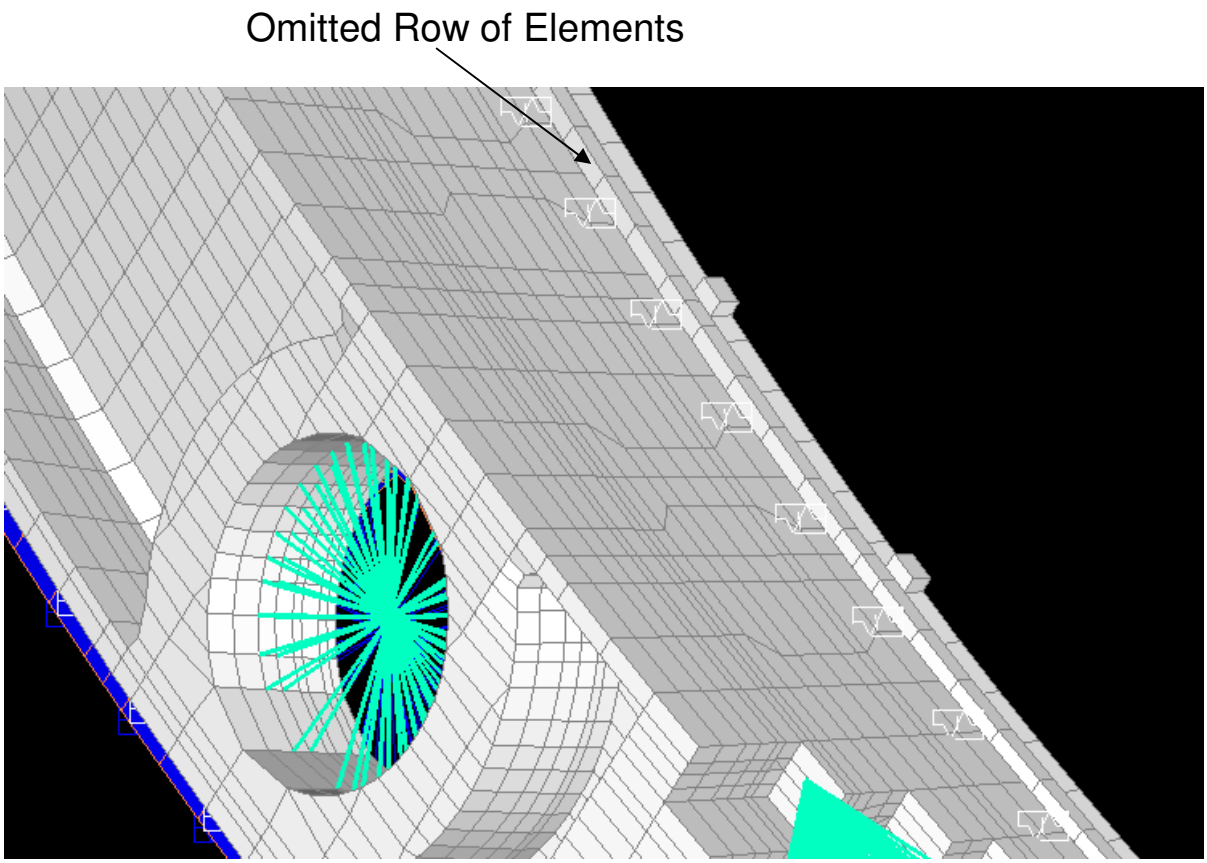

Figure 3.4-11: Additional Omitted Elements on Upper Support Ring

After omitting the elements shown in Figure 3.4-10 and 3.4-11, it was found that 3 additional elements (8035881, 8035989, 8035991) had high stresses. These elements were connected to either an RBE2 or a CBUSH. Figure 3.4-12 shows the location of the 3 elements. For the element connected to the RBE2, the stresses on all the nodes in the element were recovered. The stress on all the other nodes in the element resulted with positive margins.

ID SUBCASE MAX-PRIN-A MAX-PRIN-B MAX-PRIN-C MAX-PRIN-D MAX-PRIN-E MAX-PRIN-F MAX-PRIN-G MAX-PRIN-H

8035881 1020 4.744452E+03 7.071944E+03 2.693563E+04 1.596904E+04 2.055569E+04 **4.276148E+04** **4.495079E+04** 2.648401E+04

Stress of node connected to RBE2

Stress of node with the next highest stress

For the 2 elements around the CBUSH, bearing calculations were performed in the Outer Cylinder to Upper Support Ring bolt analysis (Section 3.10.3). Positive margins were obtained in the bearing calculations. Therefore elements 8035881, 8035989, 8035991 were omitted in the margin of safety calculations.

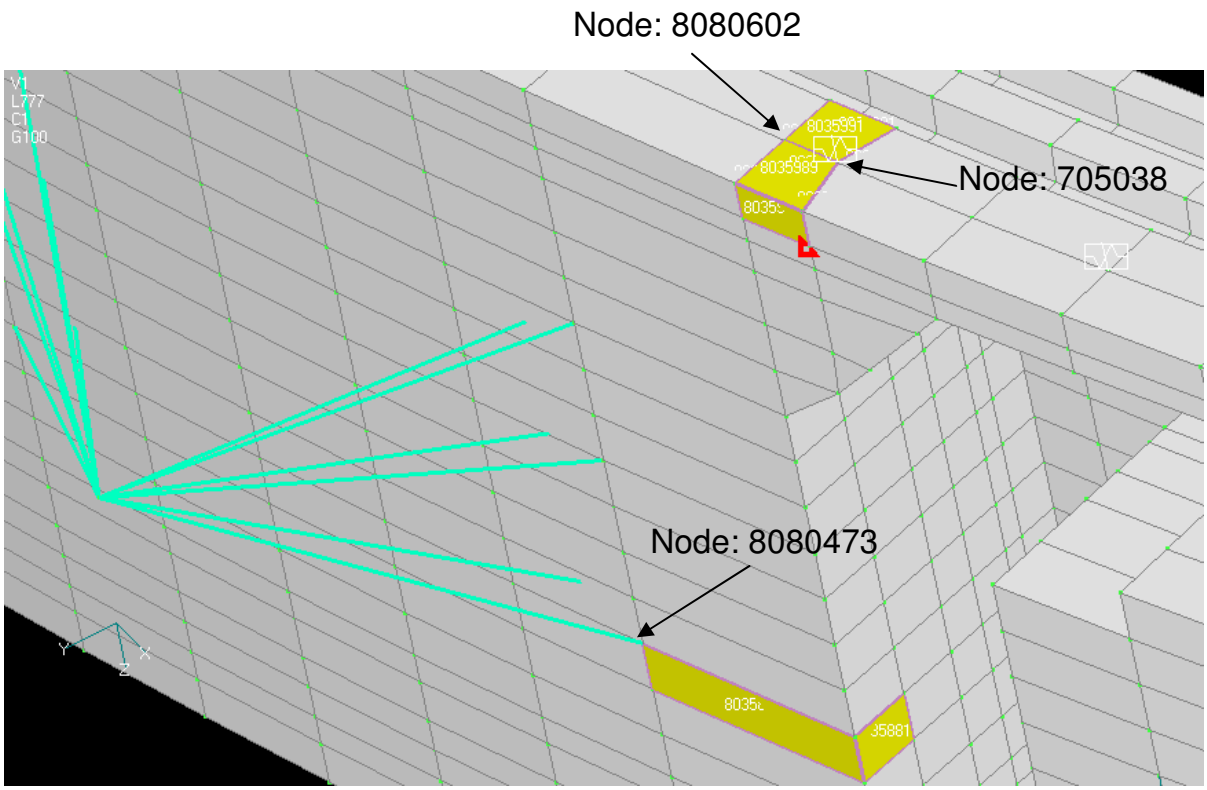

Figure 3.4-12: Location of Elements 8035881, 8035989, 8035991

Check of Upper Support Ring

Material Properties : 7050-T7451 AL ALY, AMS 4108 *(MIL-HDBK-5H, Table 3.7.3.0(d) for thickness of 5.001"-6.000")*

$F_{tu} := 66000 \cdot psi$ $F_{ty} := 53000 \cdot psi$ $F_{su} := 40000 \cdot psi$

Factors of Safety, $FS_u := 1.4$ $FS_y := 1.1$

Temperature Reduction Factors, *(Ref. MIL-HDBK-5H, Figure 3.7.3.2.1)*

Launch: + At 120°F: $\beta_{u1} := 0.95$ $\beta_{y1} := 0.99$

Abort Landing: + At 150°F: $\beta_{u2} := 0.91$ $\beta_{y2} := 0.97$

Maximum Von-Mises, Principal, and Shear stresses of both plate and solid elements are selected from 64 load cases for Launch and 64 load cases for Abort Landing. NASPOST is used to sort out the maximum stresses within the load cases.

+ Launch: For Solid Elements

Maximum Principal stress, $u_{u1} := 42867 \cdot psi$ *ID: 8033822 , LC: 1007*
(Refer to Appendix A13, p. A13-38)

Maximum Von-Mises stress, $u_{y1} := 46108 \cdot psi$ *ID: 8035767 , LC: 1020*
(Refer to Appendix A13, p. A13-39)

Maximu Shear stress, $u_{s1} := 25964 \cdot psi$ *ID: 8035767 , LC: 1020*
(Refer to Appendix A13, p. A13-40)

Margins of Safety:

$$MS_{u1} := \frac{\beta_{u1} \cdot F_{tu}}{FS_u \cdot u_{u1}} - 1 \qquad MS_{u1} = 0.045$$

$$MS_{y1} := \frac{\beta_{y1} \cdot F_{ty}}{FS_y \cdot u_{y1}} - 1 \qquad MS_{y1} = 0.035$$

$$MS_{s1} := \frac{\beta_{u1} \cdot F_{su}}{FS_u \cdot u_{s1}} - 1 \qquad MS_{s1} = 0.0454$$

+ Launch: For Plate Elements

Maximum Principal stress, $u_{u1} := 30860 \cdot psi$ *ID: 8100183 , LC: 1028 (Refer to Appendix A13, p. A13-24)*

Maximum Von-Mises stress, $u_{y1} := 31503 \cdot psi$ *ID: 8100184 , LC: 1028 (Refer to Appendix A13, p. A13-25)*

Maximu Shear stress, $u_{s1} := 16220 \cdot psi$ *ID: 8100183 , LC: 1028 (Refer to Appendix A13, p. A13-26)*

Margins of Safety:

$$MS_{u1} := \frac{\beta_{u1} \cdot F_{tu}}{FS_u \cdot u_{u1}} - 1 \qquad MS_{u1} = 0.451$$

$$MS_{y1} := \frac{\beta_{y1} \cdot F_{ty}}{FS_y \cdot u_{y1}} - 1 \qquad MS_{y1} = 0.514$$

$$MS_{s1} := \frac{\beta_{u1} \cdot F_{su}}{FS_u \cdot u_{s1}} - 1 \qquad MS_{s1} = 0.6734$$

+ Abort Landing: For Solid Elements

Maximum Principal stress, $u_{u2} := 36788 \cdot psi$ *ID: 8057602 , LC: 2027 (Refer to Appendix A13, p. A13-50)*

Maximum Von-Mises stress, $u_{y2} := 34145 \cdot psi$ *ID: 8057602 , LC: 2027 (Refer to Appendix A13, p. A13-51)*

Maximu Shear stress, $u_{s2} := 17405 \cdot psi$ *ID: 8057602 , LC: 2027 (Refer to Appendix A13, p. A13-52)*

Margins of Safety:

$$MS_{u2} := \frac{\beta_{u2} \cdot F_{tu}}{FS_u \cdot u_{u2}} - 1 \qquad MS_{u2} = 0.166$$

$$MS_{y2} := \frac{\beta_{y2} \cdot F_{ty}}{FS_y \cdot u_{y2}} - 1 \qquad MS_{y2} = 0.369$$

$$MS_{s2} := \frac{\beta_{u2} \cdot F_{su}}{FS_u \cdot u_{s2}} - 1 \qquad MS_{s2} = 0.494$$

+ Abort Landing: For Plate Elements

Maximum Principal stress, $u_{u2} := 31544 \cdot psi$ *ID: 8100183 , LC: 2012 (Refer to Appendix A13, p. A13-33)*

Maximum Von-Mises stress, $u_{y2} := 32240 \cdot psi$ *ID: 8100184 , LC: 2012 (Refer to Appendix A13, p. A13-34)*

Maximu Shear stress, $u_{s2} := 16573 \cdot psi$ *ID: 8100183 , LC: 2012 (Refer to Appendix A13, p. A13-35)*

Margins of Safety:

$$MS_{u2} := \frac{\beta_{u2} \cdot F_{tu}}{FS_u \cdot u_{u2}} - 1 \qquad MS_{u2} = 0.36$$

$$MS_{y2} := \frac{\beta_{y2} \cdot F_{ty}}{FS_y \cdot u_{y2}} - 1 \qquad MS_{y2} = 0.45$$

$$MS_{s2} := \frac{\beta_{u2} \cdot F_{su}}{FS_u \cdot u_{s2}} - 1 \qquad MS_{s2} = 0.569$$

3.5 Lower Support Ring

Margins of Safety

Table 3.5-1: Minimum Margin of Safety Summary

Part / Dwg Number	Part Name / Description	Material & Heat Treatment	Critical Load Condition	Failure Mode	Margin of Safety	Reference Page
SDG39135785	Lower Support Ring	AL ALY 7050-T7451	Launch	Yield	0.035 (u)	3.4-26 (From Upper Support Ring Analysis)

Factors of Safety

The hardware is designed with a yield factor of 1.1 and an ultimate factor of 1.4 against limit loads for Launch and Landing.

Description of Structure

Figure 3.5-1 below shows the location of Lower Support Ring in AMS-02. The Ring is machined from 7050-T7451 Aluminum Alloy Rolled Forging. It is attached to the Outer Cylinder with 200 bolts, and to the Conical Flange with 192 bolts. Eight Strap Ports are machined on the Ring to accommodate the magnet suspension straps. The Lower Support Ring has four Interface Plates for attachment of the USS-02.

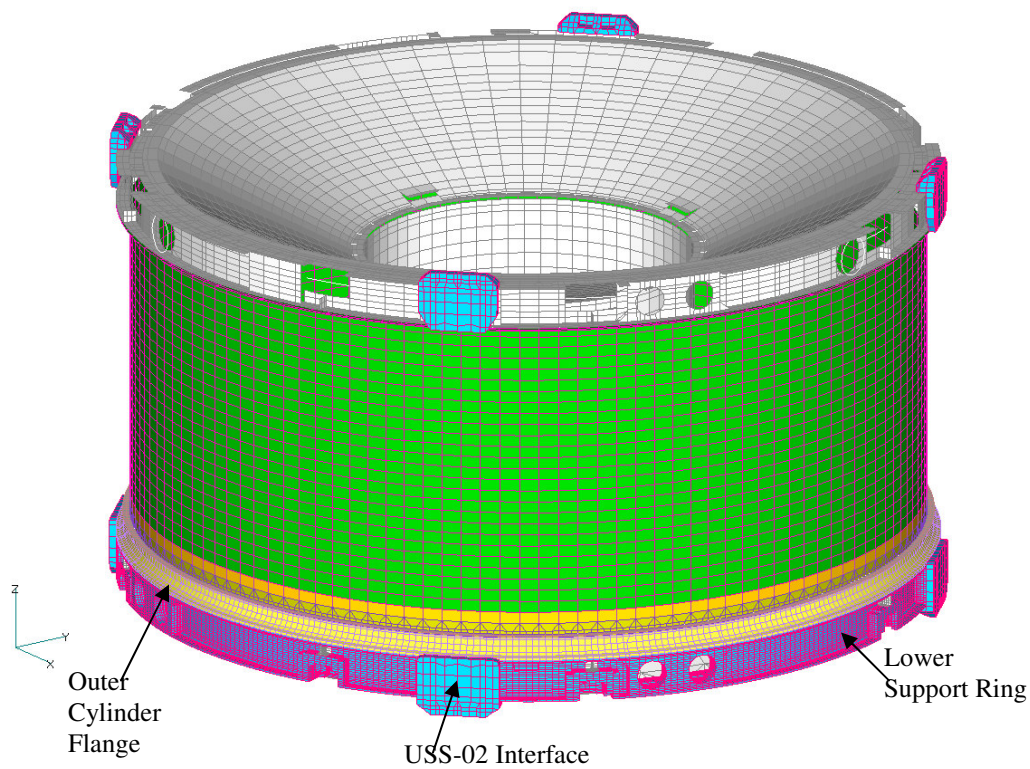

Figure 3.5-1: Location of Lower Support Ring in AMS-02

* Note that the above figure does not show USS-02 for clarity.

Description of Model

High Detail USS Flight Model

The high detail USS flight model is used for the stress analysis of the Lower Support Ring. This model is used to recover On-Orbit Loads as well as the base for all detailed Flight USS models. It includes the 5-07 loads model with high fidelity models integrated into it. These models include the Sill, Elbow, Lower USS and VC Interface Joints as well as the Keel Block. These models are used in previous flight stress analysis as separate models and were created for each joint. Since computer resources have improved, we now have the ability to run larger models. These models are combined into one model. This was done to save on the number of models required which reduces the total number of runs required saving both man hours and cpu time as well as reducing the possibilities of errors. This model is shown in Figure 3.5-2. The FEA model is called uss-8-07-high.MOD and is stored in the directory \\Escfil02\caduser\projects\edsug\ams\public\sangster\8-07\Flight FEMAP Models.

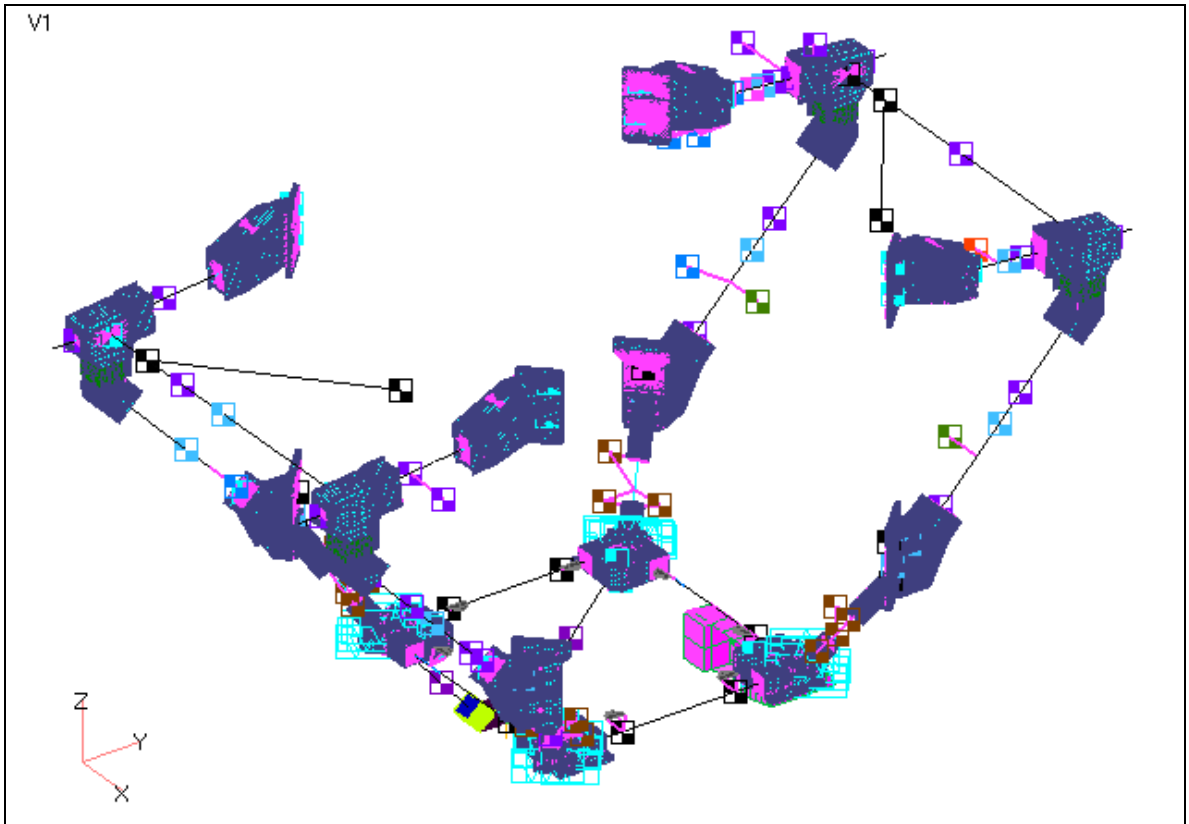

Figure 3.5-2: High Detail Full Flight USS Model

High Detail Flight Vacuum Case Model

The high detail Vacuum Case model is used for the stress analysis of the Lower Support Ring. This model is created by combining the stress models of the Lower Ring, Lower Ring, Conical Flange, Outer Cylinder, and Inner Cylinder into a single model. This model is shown in Figure 3.5-3.

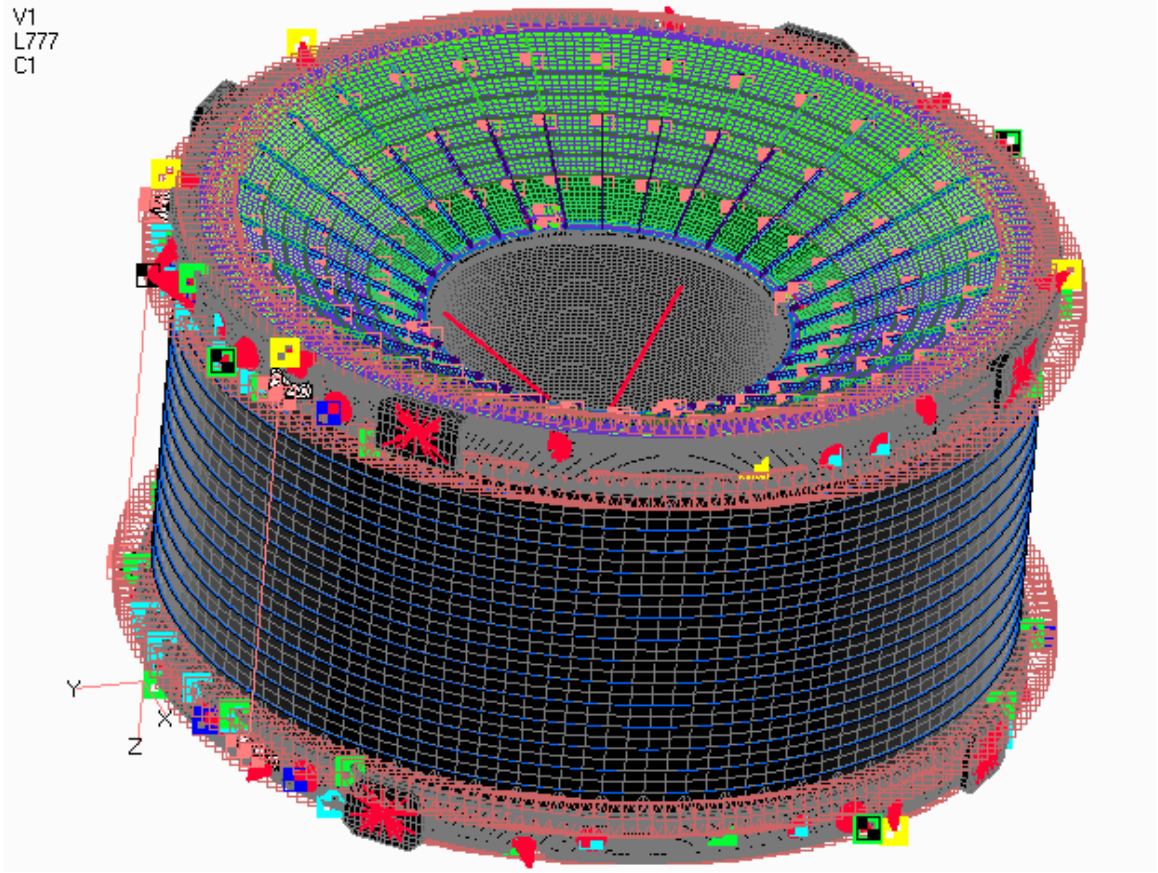

Figure 3.5-3: High Detail Flight VC

Model Checks

The model checks are documented in Section 4.11.1 of the AMS-02 Fatigue and Fracture report ESCG-4450-08-STAN-DOC-0115. The model checks correspond to Configuration 13 per the AMS-02 Fatigue and Fracture report ESCG-4450-08-STAN-DOC-0115. Configuration 13 consists of the flight and landing configurations of the AMS-02.

The input files for this run are listed in Table 3.5-2. Table 3.5-3 shows the files used to check that the RBE2 elements have modeling contact and not tension as intended. Table 3.5-4 lists the different VC models used for different load cases. The different models were created depending on what portion of the RBE2 elements are used for modeling contact for that load case. Table 3.5-6 lists the model files used for each load case. Model checks for both the constrained and unconstrained models are shown in Table 3.5-7. The fixed modes run shows that when the model is constrained it is fully constrained. The Strain Energy checks shown in Table 3.5-8 show the total strain energy.

Table 3.5-2: Files used

Include file directory	Include File name	Description or Description Location
/ams/transport/bulk	vc-high.dat *Note 1	This Model 2.3.2. High Detail Flight
/ams/bulk/2-07	trd.dat	2-07 Loads Model - AMS Stress Report
/ams/bulk/2-07	trdgas.dat	2-07 Loads Model - AMS Stress Report
/ams/bulk/2-07	trdgas-spring.dat	2-07 Loads Model - AMS Stress Report
/ams/bulk/2-07	cab.dat	2-07 Loads Model - AMS Stress Report
/ams/bulk/2-07	ltof.dat	2-07 Loads Model - AMS Stress Report
/ams/bulk/2-07	ltof-bolts.dat	2-07 Loads Model - AMS Stress Report
/ams/bulk/2-07	ecal.dat	2-07 Loads Model - AMS Stress Report
/ams/bulk/2-07	ecal-bolts.dat	2-07 Loads Model - AMS Stress Report
/ams/bulk/2-07	ramradiator.dat	2-07 Loads Model - AMS Stress Report
/ams/bulk/2-07	wakeradiator.dat	2-07 Loads Model - AMS Stress Report
/ams/bulk/2-07	utof.dat	2-07 Loads Model - AMS Stress Report
/ams/bulk/2-07	utof-bolts.dat	2-07 Loads Model - AMS Stress Report
/ams/bulk/2-07	rich.dat	2-07 Loads Model - AMS Stress Report
/ams/bulk/2-07	rich-bolts.dat	2-07 Loads Model - AMS Stress Report
/ams/transport/bulk	trdgas-high-connect.dat	This file contains the bracket connecting the TRD Gas to the Joint
/ams/transport/bulk	uss-high-rbemixed-rbe2.dat	Vacuum Cash Shipping Fixture Stress Report
/ams/bulk/2-07	pas.dat	2-07 Loads Model - AMS Stress Report
/ams/bulk/2-07	preload.dat	2-07 Loads Model - AMS Stress Report
/ams/bulk/2-07	hetank-empty.dat	2-07 Loads Model - AMS Stress Report
/ams/bulk/2-07	magnet.dat	2-07 Loads Model - AMS Stress Report
/ams/bulk/2-07	nlstraps.dat	2-07 Loads Model - AMS Stress Report
/ams/bulk/2-07	parame.dat	2-07 Loads Model - AMS Stress Report
/ams/bulk/2-07	ip-uss-springs.dat	2-07 Loads Model - AMS Stress Report

Include file directory	Include File name	Description or Description Location
/ams/transport/bulk	ip-vc-springs.dat	2-04 Loads Model VC interface Springs
/ams/bulk/2-07	mpc2.dat	2-07 Loads Model - AMS Stress Report
/ams/bulk/2-07	mpc3.dat	2-07 Loads Model - AMS Stress Report
/ams/bulk/2-07	mpc4.dat	2-07 Loads Model - AMS Stress Report
/ams/bulk/2-07	spc1.dat	2-07 Loads Model - AMS Stress Report
/ams/bulk/2-07	spc2.dat	2-07 Loads Model - AMS Stress Report
/ams/bulk/2-07	spc3.dat	2-07 Loads Model - AMS Stress Report
/ams/bulk/2-07	spc4.dat	2-07 Loads Model - AMS Stress Report
/ams/bulk/2-07	cord.dat	2-07 Loads Model - AMS Stress Report
/ams/bulk/2-07	temp-warm.dat	2-07 Loads Model - AMS Stress Report
/ams/bulk/2-07	temp-cold.dat	2-07 Loads Model - AMS Stress Report
/ams/transport/bulk	elbo-rsscon.dat	RSSCON Cards Pulled from same location as joint described in this report
/ams/transport/bulk	loweruss-resscon.dat	RSSCON Cards Pulled from same location as joint described in this report
/ams/transport/bulk	sill-rsscon.dat	RSSCON Cards Pulled from same location as joint described in this report
/ams/transport/bulk	vc-rsscon.dat	RSSCON Cards Pulled from same location as joint described in this report
/ams/transport13-fulltest/	job-modal-flight-h	Job File

The VC is modeled using RBE2 elements to represent the compressive contact between the Rings and Outer Cylinder as well as the Rings and conical flange. For other configurations, this is realistic since the inertia loads do not overcome the compressive pressure load. For liftoff and landing, the inertia load overcomes the compressive load in some elements. This means that the RBE2 is experiencing a tensile load when it should only be experiencing a compressive load. To correct for this, an iterative process was used in which the RBE2 elements were removed and runs were redone until all remaining RBE2 elements only carried compressive loads. This check was made using Naspost and files are listed in Table 3.5-2. The modes and frequencies shown are for the initial run with all RBE2 elements. It was found that the frequencies did not shift much with the minimal number of RBE2 elements removed.

Table 3.5-3: Naspost RBE2 Compression Check

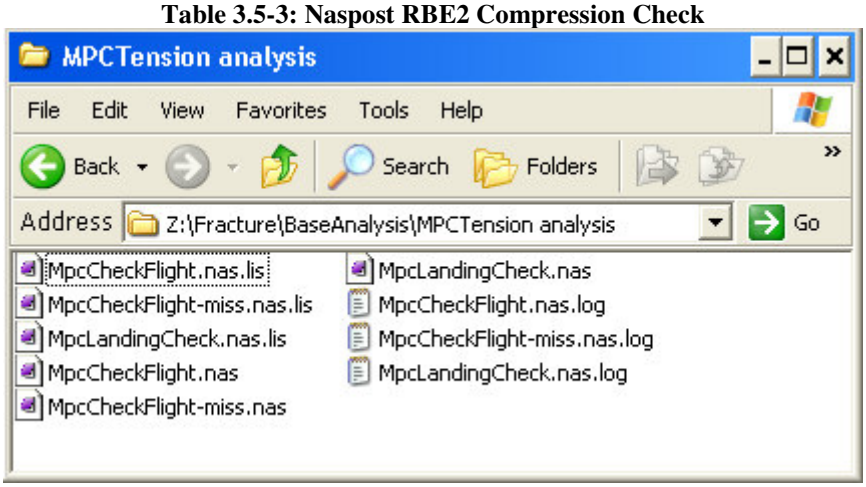

Table 3.5-4: VC Model Files

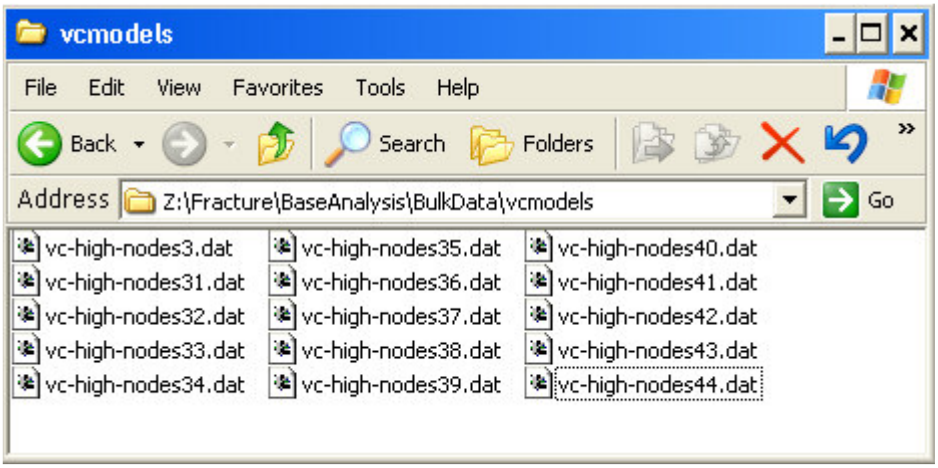

Table 3.5-5: Configuration 13 Job File List

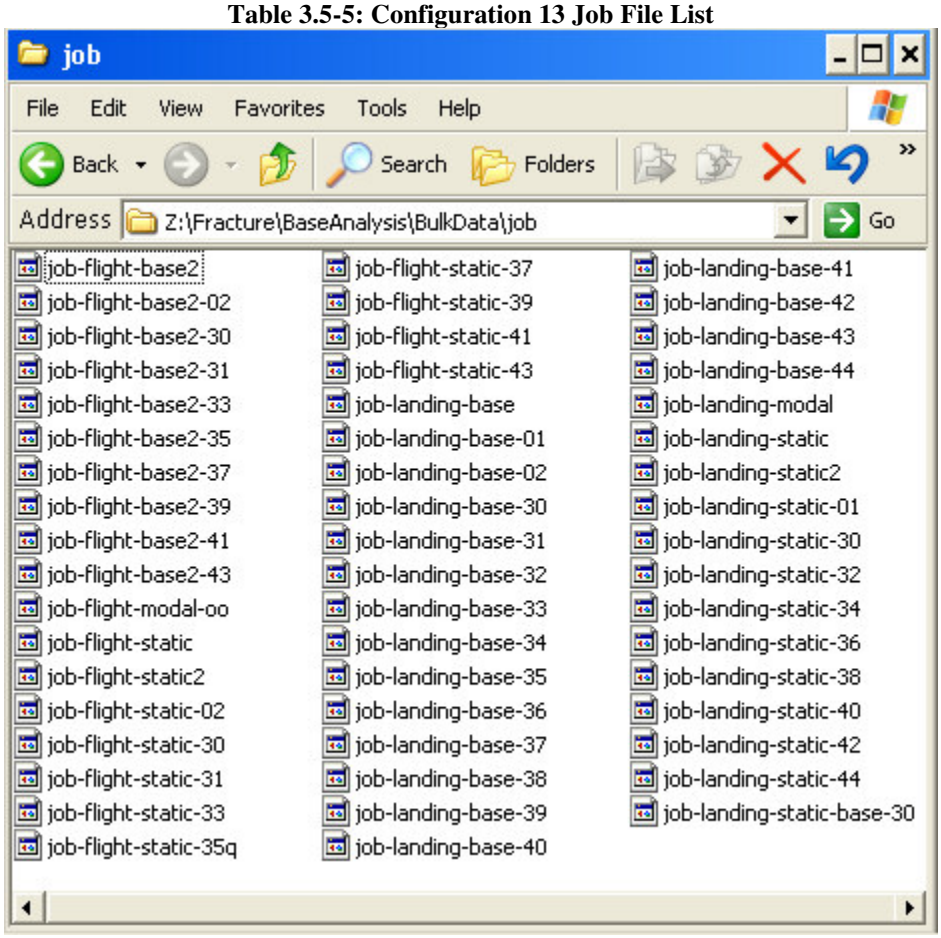

Table 3.5-6: Configuration 13 File list

Final Run Name	Load Case	VC model	Final Run Name	Load Case	VC model
13-high-flight-35-1001	1001	35	13-high-landing-34-2001	2001	34
13-high-flight-35-1002	1002	35	13-high-landing-34-2002	2002	34
13-high-flight-43-1003	1003	43	13-high-landing-42-2003	2003	42
13-high-flight-37a-1004	1004	37	13-high-landing-42-2004	2004	42
13-high-flight-35-1005	1005	35	13-high-landing-36-2005	2005	36
13-high-flight-35-1006	1006	35	13-high-landing-34-2006	2006	34
13-high-flight-37a-1007	1007	37	13-high-landing-40a-2007	2007	40
13-high-flight-37a-1008	1008	37	13-high-landing-40a-2008	2008	40
13-high-flight-35-1009	1009	35	13-high-landing-34-2009	2009	34
13-high-flight-35-1010	1010	35	13-high-landing-34-2010	2010	34
13-high-flight-37a-1011	1011	37	13-high-landing-34-2011	2011	34
13-high-flight-39a-1012	1012	39	13-high-landing-34-2012	2012	34
13-high-flight-35-1013	1013	35	13-high-landing-34-2013	2013	34
13-high-flight-37a-1014	1014	37	13-high-landing-34-2014	2014	34
13-high-flight-37a-1015	1015	37	13-high-landing-34-2015	2015	34
13-high-flight-39a-1016	1016	39	13-high-landing-36-2016	2016	36
13-high-flight-39a-1017	1017	39	13-high-landing-38-2017	2017	38
13-high-flight-39a-1018	1018	39	13-high-landing-40a-2018	2018	40
13-high-flight-41-1019	1019	41	13-high-landing-42-2019	2019	42
13-high-flight-41-1020	1020	41	13-high-landing-40a-2020	2020	40
13-high-flight-43-1021	1021	43	13-high-landing-40a-2021	2021	40
13-high-flight-41-1022	1022	41	13-high-landing-38-2022	2022	38
13-high-flight-41-1023	1023	41	13-high-landing-40a-2023	2023	40
13-high-flight-43-1024	1024	43	13-high-landing-40a-2024	2024	40
13-high-flight-37a-1025	1025	37	13-high-landing-34-2025	2025	34
13-high-flight-37a-1026	1026	37	13-high-landing-34-2026	2026	34
13-high-flight-41-1027	1027	41	13-high-landing-34-2027	2027	34
13-high-flight-37a-1028	1028	37	13-high-landing-34-2028	2028	34
13-high-flight-39a-1029	1029	39	13-high-landing-34-2029	2029	34
13-high-flight-39a-1030	1030	39	13-high-landing-34-2030	2030	34
13-high-flight-39a-1031	1031	39	13-high-landing-34-2031	2031	34
13-high-flight-37a-1032	1032	37	13-high-landing-34-2032	2032	34
13-high-flight-41-1033	1033	41	13-high-landing-40a-2033	2033	40
13-high-flight-41-s-1034	1034	41	13-high-landing-44-2034	2034	44
13-high-flight-35-1035	1035	35	13-high-landing-36-2035	2035	36
13-high-flight-35-1036	1036	35	13-high-landing-40a-2036	2036	40
13-high-flight-39a-1037	1037	39	13-high-landing-40a-2037	2037	40
13-high-flight-39a-1038	1038	39	13-high-landing-40a-2038	2038	40
13-high-flight-35-1039	1039	35	13-high-landing-36-2039	2039	36
13-high-flight-35-1040	1040	35	13-high-landing-34-2040	2040	34

Final Run Name	Load Case	VC model
13-high-flight-35-1041	1041	35
13-high-flight-35-1042	1042	35
13-high-flight-35-1043	1043	35
13-high-flight-35-1044	1044	35
13-high-flight-35-1045	1045	35
13-high-flight-35-1046	1046	35
13-high-flight-35-1047	1047	35
13-high-flight-35-1048	1048	35
13-high-flight-43-1049	1049	43
13-high-flight-43-1050	1050	43
13-high-flight-39a-1051	1051	39
13-high-flight-39a-1052	1052	39
13-high-flight-43-1053	1053	43
13-high-flight-43-1054	1054	43
13-high-flight-41-1055	1055	41
13-high-flight-39a-1056	1056	39
13-high-flight-39a-1057	1057	39
13-high-flight-39a-1058	1058	39
13-high-flight-35-1059	1059	35
13-high-flight-35-1060	1060	35
13-high-flight-39a-1061	1061	39
13-high-flight-39a-1062	1062	39
13-high-flight-35-1063	1063	35
13-high-flight-35-1064	1064	35

Final Run Name	Load Case	VC model
13-high-landing-38-2041	2041	38
13-high-landing-38-2042	2042	38
13-high-landing-34-2043	2043	34
13-high-landing-38-2044	2044	38
13-high-landing-38-2045	2045	38
13-high-landing-38-2046	2046	38
13-high-landing-34-2047	2047	34
13-high-landing-38-2048	2048	38
13-high-landing-42-2049	2049	42
13-high-landing-42-2050	2050	42
13-high-landing-38-2051	2051	38
13-high-landing-40a-2052	2052	40
13-high-landing-44-2053	2053	44
13-high-landing-44-2054	2054	44
13-high-landing-38-2055	2055	38
13-high-landing-36-2056	2056	36
13-high-landing-38-2057	2057	38
13-high-landing-38-2058	2058	38
13-high-landing-34-2059	2059	34
13-high-landing-34-2060	2060	34
13-high-landing-40a-2061	2061	40
13-high-landing-38-2062	2062	38
13-high-landing-34-2063	2063	34
13-high-landing-34-2064	2064	34

Table 3.5-7: Modes Frequency Fixed

Cycles (Hz)	Tran X	Tran Y	Tran Z	Rot X	Rot Y	Rot Z
4.40	0.00	0.36	0.00	0.36	0.00	0.00
6.30	0.00	0.00	0.13	0.00	0.00	0.00
7.68	0.00	0.00	0.00	0.00	0.00	0.16
8.88	0.70	0.00	0.00	0.00	0.66	0.00
9.52	0.00	0.00	0.00	0.00	0.00	0.00
9.96	0.00	0.00	0.00	0.00	0.00	0.00
11.63	0.00	0.00	0.00	0.00	0.00	0.00
11.94	0.00	0.00	0.00	0.00	0.00	0.00
12.00	0.00	0.60	0.00	0.59	0.00	0.00
12.80	0.00	0.00	0.00	0.00	0.00	0.00
13.17	0.00	0.00	0.00	0.00	0.00	0.00
13.28	0.06	0.00	0.03	0.00	0.03	0.00
14.43	0.00	0.00	0.00	0.00	0.00	0.00
14.51	0.00	0.00	0.23	0.00	0.00	0.00
14.97	0.06	0.00	0.05	0.00	0.06	0.00
17.76	0.00	0.00	0.00	0.00	0.00	0.00
22.30	0.00	0.00	0.00	0.00	0.00	0.00
22.96	0.02	0.00	0.20	0.00	0.03	0.00
23.86	0.00	0.00	0.00	0.00	0.00	0.00
24.42	0.01	0.00	0.05	0.00	0.02	0.03
24.79	0.00	0.00	0.00	0.00	0.00	0.00
25.05	0.00	0.00	0.00	0.00	0.00	0.00
25.25	0.00	0.00	0.00	0.00	0.00	0.00
26.21	0.02	0.00	0.03	0.00	0.02	0.05
26.48	0.00	0.00	0.00	0.00	0.00	0.00
27.42	0.04	0.00	0.14	0.00	0.04	0.01
27.60	0.00	0.00	0.00	0.00	0.00	0.00
27.69	0.00	0.00	0.00	0.00	0.00	0.00
28.26	0.01	0.00	0.01	0.00	0.01	0.00
28.49	0.00	0.00	0.00	0.00	0.00	0.01
29.29	0.05	0.00	0.01	0.00	0.07	0.10
30.37	0.00	0.00	0.00	0.00	0.00	0.00
30.57	0.00	0.01	0.00	0.01	0.00	0.15
31.11	0.00	0.00	0.00	0.00	0.00	0.00
31.20	0.00	0.00	0.00	0.00	0.00	0.00
31.54	0.00	0.00	0.00	0.00	0.00	0.03
32.04	0.00	0.00	0.00	0.00	0.00	0.00
32.88	0.00	0.00	0.00	0.00	0.00	0.00
32.93	0.00	0.00	0.00	0.00	0.00	0.00
34.06	0.00	0.00	0.01	0.00	0.00	0.00
34.10	0.00	0.00	0.01	0.00	0.00	0.00

Cycles (Hz)	Tran X	Tran Y	Tran Z	Rot X	Rot Y	Rot Z
34.56	0.00	0.00	0.00	0.00	0.00	0.00
34.64	0.00	0.00	0.00	0.00	0.00	0.22

Table 3.5-8: Strain Energy Check

DOF	G-SET
1	5.8E-06
2	4.3E-06
3	4.1E-06
4	7.6E-01
5	8.0E-01
6	2.5E-03

Material and Temperature

The Lower Support Ring is 7050-T7451 Aluminum Alloy. Material properties of 7050-T7451 are taken from *MIL-HDBK-5H, Table 3.7.3.0(d) for thickness of 5.001"-6.000"*. Temperature limits are based upon *Bolted Interface Temperatures* worksheet provided by Thermal Group. For Launch condition, the temperature of 120°F is applied. For Abort Landing condition, the temperature of 150°F is applied.

Analysis

The updated model was used with data sorted for every configuration individually. The previous stress analysis that Peter Hoang performed is replaced with the stress analysis performed by Chris Sangster. The stress analysis performed for the Upper Support Ring will envelop the stress analysis for the Lower Support Ring. Stresses were much higher in the Upper Support Ring and resulted with positive margins. Therefore, margins for the Lower Support Ring will be positive. The critical stresses for the Upper Support Ring are compared to the ultimate and yield strength of 7050-T7451 Aluminum Alloy. Refer to Section 3.4 for details of the stress analysis.

3.6 Upper Interface Plate Assembly

Upper Interface Plate Assembly

The upper interface plate connects the Upper USS-02 Assembly to the Upper Support Ring. The upper interface plates (SDG39135788-301, -303) are machined from Aluminum 7050-T7451 plate. There are four interface plates used to bolt the Upper USS-02 Assembly to the Vacuum Case.

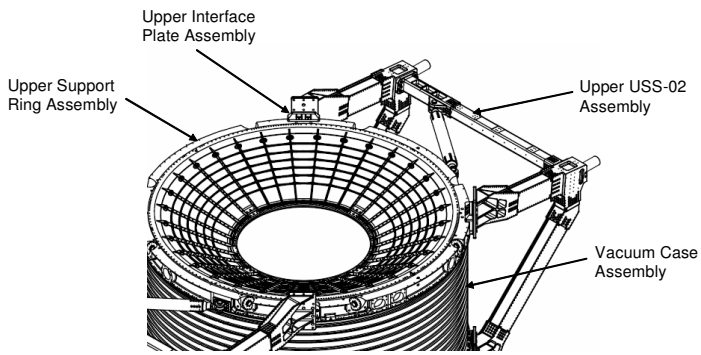

Material Properties: 7050-T7451 AL Alloy, AMS 4050 (Ref. Table 3.7.3.0(b_1), MIL-HDBK-5H)

$F_{tu} := 68000 \cdot psi \cdot 0.92$ *(Ultimate Tensile Strength)*

$F_{ty} := 59000 \cdot psi \cdot 0.97$ *(Tensile Yield Strength)*

$F_{su} := 43000 \cdot psi \cdot 0.92$ *(Ultimate Shear Strength)*

Factors of Safety

$FS_u := 1.4$ *(Ultimate)* $FS_y := 1.1$ *(Yield)*

The expected temperature range is +40 to +150F (Ref. Appendix C2). A 92% temperature de-rating on ultimate strength and 97% temperature de-rating on yield strength is being applied to the abort landing case (Ref. Figure 3.7.3.2.1, MIL-HDBK-5H).

Part Geometry

$b := 10.5 \cdot in$ *(Base)*

$h := .75 \cdot in$ *(Height)*

$d_{load} := 2.0 \cdot in$ *(Moment Arm Distance)*

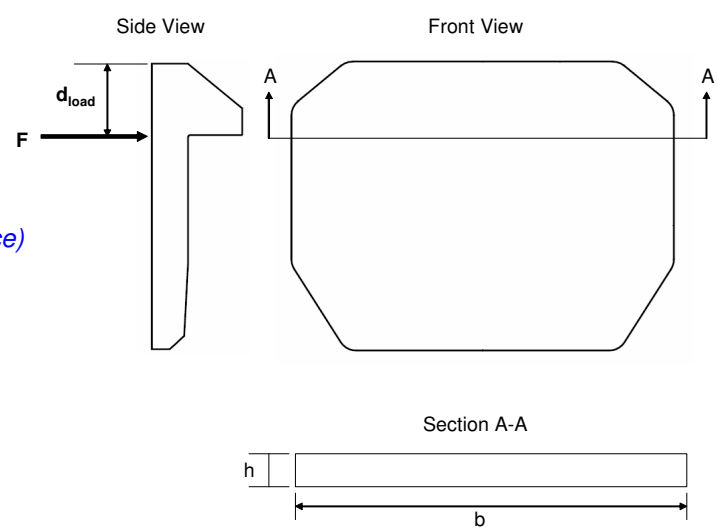

(At section A-A)

$$I_{AA} := \frac{1}{12} \cdot b \cdot h^3$$

$$c_{AA} := \frac{h}{2}$$

$$A_{AA} := b \cdot h$$

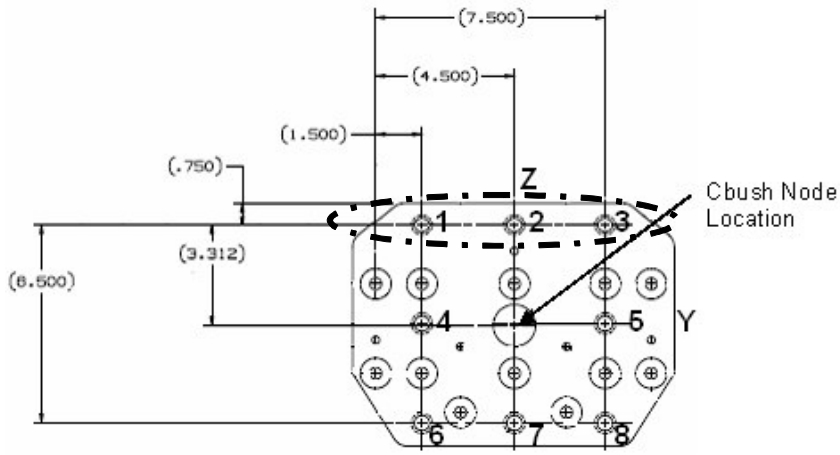

Upper Vacuum Case Interface Plate to USS-02 Bolt Pattern

Loads were obtained from bolt analysis Section 2.4.1.1, Upper Interface Plate to USS-02, using the output file "output_forces_upperussipf_r2_abortland.txt". The output gives an array with the element identification, load case number, applied load on the bolt, applied shear on the bolt, and applied moment on the bolt. These bolt forces will be used to calculate the force being applied on the upper interface plate. Loads model 2-04 was used to retrieve loads at the four bolted interfaces. A Cbush element located at the center of each interface plate was post processed in NASPOST for forces and moments in the x, y, and z directions. The Cbush element identifications for the four bolted interfaces are 66001, 66002. 66003, and 66004. These loads are read into an array and distributed out to the 8 bolts for each interface plate. This joint was checked for minimum margins of safety for launch, nominal landing, and abort landing load cases. The abort landing cases combined with abort landing temperature data resulted in the lowest minimum margins of safety. Therefore, the abort landing cases are used in this analysis as well. For the purpose of this analysis, only the loads from bolt numbers 1, 2, and 3 were considered. Refer to figure below for bolt location.

$$
\begin{array}{ccccc}
\text{ID} & \text{LC} & \text{P} & \text{V} & \text{M} \\
\end{array}
$$

$$
\begin{bmatrix}
660011 & 2001 & 972.15 & -371.27 & 0 \\
660011 & 2002 & 901.16 & -481.51 & 0 \\
\ldots & \ldots & \ldots & \ldots & \ldots \\
660011 & 2064 & 609.03 & -482.25 & 0 \\
660012 & 2001 & 1226.6 & -272.81 & 0 \\
660012 & 2002 & 1034.33 & -353.82 & 0 \\
\ldots & \ldots & \ldots & \ldots & \ldots \\
660012 & 2064 & 650.31 & -354.36 & 0 \\
\ldots & \ldots & \ldots & \ldots & \ldots \\
\ldots & \ldots & \ldots & \ldots & \ldots \\
660013 & 2001 & 1481.04 & -371.27 & 0 \\
660013 & 2002 & 1167.49 & -481.51 & 0 \\
\ldots & \ldots & \ldots & \ldots & \ldots \\
660013 & 2064 & 691.59 & -482.25 & 0
\end{bmatrix}
$$

Example of Output File Data

Format of Output File

The element ID number is located in the first column and the LC numbers in the second column. For each element identification, 66001, 66002, 66003, and 66004, the bolt number within the bolt pattern is added to the end of each element identification. For example, the element identification number 66001 will have bolt numbers 1 thru 3 attached to the end for all 64 load cases. This brings the total number of load cases to 768 (4 joints x 3 bolts x 64 load cases = 768). Refer to example of output file data.

The applied load, F, was determined using the applied load values given in output file "output_forces_upperussipf_r2_abortland.txt". Only the applied loads from bolt number 1, 2, and 3 were used for all 64 abort load cases. The maximum load being applied on bolts 1, 2, or 3 is 3728.8 lbf. A conservative approach will be taken, and the maximum load will be multiplied by a factor of 3 since there are 3 bolts along the analyzed cross section. Therefore, an applied load of 11186.4 lbf will be used for this analysis.

Stress at Section A-A

$F := 11186.4 \cdot lbf$ *(Applied Load)*

$M := F \cdot d_{load}$ $\quad M = 22372.8\ in \cdot lbf$ *(Bending Moment)*

$\beta := \dfrac{M \cdot c_{AA}}{I_{AA}}$ $\quad \beta = 22727.92\ psi$ *(Bending Stress)*

$u := \dfrac{F}{A_{AA}}$ $\quad u = 1420.5\ psi$ *(Shear Stress)*

$u_{max} := \sqrt{\left(\dfrac{\beta}{2}\right)^2 + u^2}$ $\quad u_{max} = 11452.4\ psi$ *(Maximum Shear Stress)*

Principal Stresses:

$\beta p_1 := \dfrac{\beta}{2} + \left[\left(\dfrac{\beta}{2}\right)^2 + u^2\right]^{\frac{1}{2}}$ $\quad \beta p_1 = 22816.36\ psi$

$\beta p_2 := \dfrac{\beta}{2} - \left[\left(\dfrac{\beta}{2}\right)^2 + u^2\right]^{\frac{1}{2}}$ $\quad \beta p_2 = -88.44\ psi$

$\beta_{max} := \begin{cases} \beta p_1 & \text{if } |\beta p_1| \geq |\beta p_2| \\ \beta p_2 & \text{otherwise} \end{cases}$ $\quad \beta_{max} = 22816.36\ psi$ *(Maximum Principal Stress)*

$\beta_{vm} := \sqrt{(\beta p_1)^2 + (\beta p_2)^2 - \beta p_1 \cdot \beta p_2}$ $\quad \beta_{vm} = 22860.71\ psi$ *(Von Mises Stress)*

Factors of Safety

$$MS_u := \frac{F_{tu}}{\beta_{max} \cdot FS_u} - 1 \qquad MS_u = 0.96$$ ***(Ultimate Margin of Safety)***

$$MS_y := \frac{F_{ty}}{\beta_{vm} \cdot FS_y} - 1 \qquad MS_y = 1.28$$ ***(Yield Margin of Safety)***

$$MS_s := \frac{F_{su}}{u_{max} \cdot FS_u} - 1 \qquad MS_s = 1.47$$ ***(Shear Margin of Safety)***

3.7 Lower Interface Plate Assembly

Prepared By	Name	Date		File Name
	G. Reyes	05/22/06		lower_intplate.mcd
Checked By	C. Bala		**Engineering and Science Contract Group** *Structural Analysis Section*	Draw ing No. SDG39135789
Title	Lower Interface Plate Assembly			

Lower Interface Plate Assembly

The lower interface plate connects the Upper USS-02 Assembly to the Lower Support Ring. The lower interface plates (SDG39135789-301) are machined from Aluminum 7050-T7451 plate. There are four interface plates used to bolt the Upper USS-02 Assembly to the Vacuum Case.

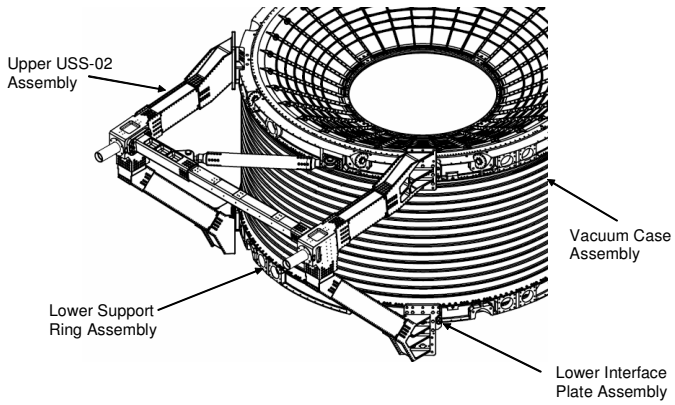

Material Properties: 7050-T7451 AL Alloy, AMS 4050 (Ref. Table 3.7.3.0(b_1), MIL-HDBK-5H)

$F_{tu} := 68000 \cdot psi \cdot 0.92$ *(Ultimate Tensile Strength)*

$F_{ty} := 59000 \cdot psi \cdot 0.97$ *(Tensile Yield Strength)*

$F_{su} := 43000 \cdot psi \cdot 0.92$ *(Ultimate Shear Strength)*

Factors of Safety

$FS_u := 1.4$ *(Ultimate)* $FS_y := 1.1$ *(Yield)*

The expected temperature range is +40 to +150F (Ref. Appendix C2). A 92% temperature de-rating on ultimate strength and 97% temperature de-rating on yield strength is being applied to the abort landing case (Ref. Figure 3.7.3.2.1, MIL-HDBK-5H).

Part Geometry

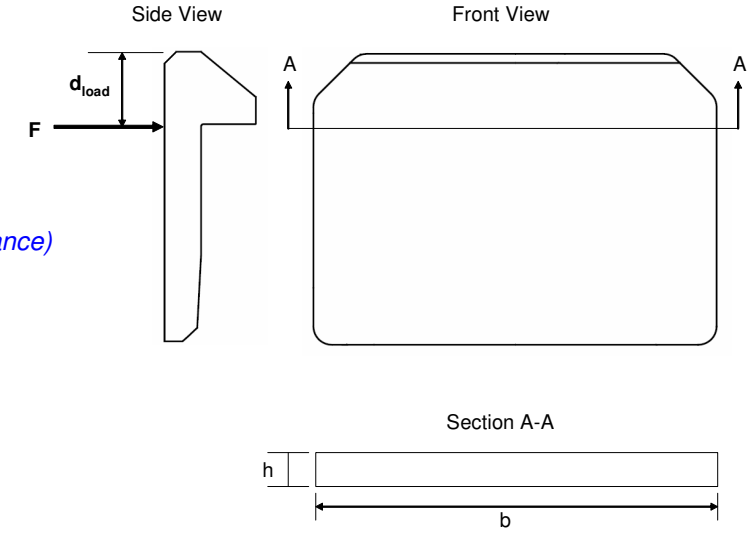

$b := 11.0 \cdot in$ *(Base)*

$h := .75 \cdot in$ *(Height)*

$d_{load} := 2.0 \cdot in$ *(Moment Arm Distance)*

(At section A-A)

$$I_{AA} := \frac{1}{12} \cdot b \cdot h^3$$

$$c_{AA} := \frac{h}{2}$$

$$A_{AA} := b \cdot h$$

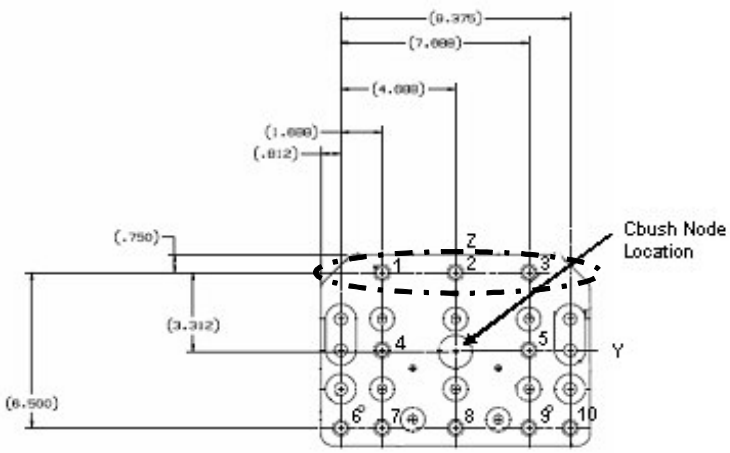

Lower Vacuum Case Interface Plate to USS-02 Bolt Pattern

Loads were obtained from bolt analysis Section 2.4.1.2, Lower Interface Plate to USS-02, using the output file "output_forces_lowerussipf_r2_abortland.txt". The output gives an array with the element identification, load case number, applied load on the bolt, applied shear on the bolt, and applied moment on the bolt. These bolt forces will be used to calculate the force being applied on the lower interface plate. Loads model 2-04 was used to retrieve loads at the four bolted interfaces. A Cbush element located at the center of each interface plate was post processed in NASPOST for forces and moments in the x, y, and z directions. The Cbush element identifications for the four bolted interfaces are 66011, 66012. 66013, and 66014. These loads are read into an array and distributed out to the 10 bolts for each interface plate. This joint was checked for minimum margins of safety for launch, nominal landing, and abort landing load cases. The abort landing cases combined with abort landing temperature data resulted in the lowest minimum margins of safety. Therefore, the abort landing cases are used in this analysis as well. For the purpose of this analysis, only the loads from bolt numbers 1, 2, and 3 were considered. Refer to figure below for bolt location.

$$\begin{array}{c} \begin{array}{ccccc} \text{ID} & \text{LC} & \text{P} & \text{V} & \text{M} \end{array} \\ \begin{bmatrix} 66011001 & 2001 & -1043.31 & -199.40 & 0 \\ 66011001 & 2002 & -966.49 & -205.79 & 0 \\ \ldots & \ldots & \ldots & \ldots & \ldots \\ 66011001 & 2064 & 617.48 & -2039.77 & 0 \\ 66011002 & 2001 & -897.34 & -158.05 & 0 \\ 66011002 & 2002 & -890.08 & -163.12 & 0 \\ \ldots & \ldots & \ldots & \ldots & \ldots \\ 66011002 & 2064 & 1052.03 & -1616.77 & 0 \\ \ldots & \ldots & \ldots & \ldots & \ldots \\ \ldots & \ldots & \ldots & \ldots & \ldots \\ 66011003 & 2001 & -751.38 & -199.40 & 0 \\ 66011003 & 2002 & -813.67 & -205.79 & 0 \\ \ldots & \ldots & \ldots & \ldots & \ldots \\ 66011003 & 2064 & 1486.59 & -2039.77 & 0 \end{bmatrix} \end{array}$$

Example of Output File Data

Format of Output File

The element ID number is located in the first column and the LC numbers in the second column. For each element identification, 66011, 66012, 66013, and 66014, the bolt number within the bolt pattern is added to the end of each element identification. For example, the element identification number 66011 will have bolt numbers 1 thru 3 attached to the end for all 64 load cases. This brings the total number of load cases to 768 (4 joints x 3 bolts x 64 load cases = 768). Refer to example of output file data.

The applied load, F, was determined using the applied load values given in output file "output_forces_lowerussipf_r2_abortland.txt". Only the applied loads from bolt number 1, 2, and 3 were used for all 64 abort load cases. The maximum load being applied on bolts 1, 2, or 3 is 2279.49 lbf. A conservative approach will be taken, and the maximum load will be multiplied by a factor of 3 since there are 3 bolts along the analyzed cross section. Therefore, an applied load of 6838.47 lbf will be used for this analysis.

Stress at Section A-A

$F := 6838.47 \cdot lbf$ *(Applied Load)*

$M := F \cdot d_{load}$ $\quad M = 13676.94\, in \cdot lbf$ *(Bending Moment)*

$\beta := \dfrac{M \cdot c_{AA}}{I_{AA}}$ $\quad \beta = 13262.49\, psi$ *(Bending Stress)*

$u := \dfrac{F}{A_{AA}}$ $\quad u = 828.91\, psi$ *(Shear Stress)*

$u_{max} := \sqrt{\left(\dfrac{\beta}{2}\right)^2 + u^2}$ $\quad u_{max} = 6682.85\, psi$ *(Maximum Shear Stress)*

Principal Stresses:

$\beta p_1 := \dfrac{\beta}{2} + \left[\left(\dfrac{\beta}{2}\right)^2 + u^2\right]^{\frac{1}{2}}$ $\quad \beta p_1 = 13314.09\, psi$

$\beta p_2 := \dfrac{\beta}{2} - \left[\left(\dfrac{\beta}{2}\right)^2 + u^2\right]^{\frac{1}{2}}$ $\quad \beta p_2 = -51.61\, psi$

$\beta_{max} := \begin{cases} \beta p_1 & \text{if } |\beta p_1| \geq |\beta p_2| \\ \beta p_2 & \text{otherwise} \end{cases}$ $\quad \beta_{max} = 13314.09\, psi$ *(Maximum Principal Stress)*

$\beta_{vm} := \sqrt{(\beta p_1)^2 + (\beta p_2)^2 - \beta p_1 \cdot \beta p_2}$ $\quad \beta_{vm} = 13339.97\, psi$ *(Von Mises Stress)*

Factors of Safety

$$MS_u := \frac{F_{tu}}{\beta_{max} \cdot FS_u} - 1 \qquad MS_u = 2.36$$ ***(Ultimate Margin of Safety)***

$$MS_y := \frac{F_{ty}}{\beta_{vm} \cdot FS_y} - 1 \qquad MS_y = 2.9$$ ***(Yield Margin of Safety)***

$$MS_s := \frac{F_{su}}{u_{max} \cdot FS_u} - 1 \qquad MS_s = 3.23$$ ***(Shear Margin of Safety)***

3.8 Clevis Plate

Clevis Plate, Vacuum Case

Drawings no.: SDG 39135790
Units used: in, lbf

The objective of this analysis is to demonstrate the structural strength of the **Clevis Plate.** The **Clevis Plate (SDG 39135790)** is mounted on the **Upper Support Ring (SEG 39135786)**.

Factors of Safety and Design Factors:

FSy := 1.1 Yield factor of safety

FSu := 1.4 Ultimate factor of safety

The Expected temperature range is 40 to +120F (Ref. Appendix C2). 98% temperature de-rating is applied for launch.

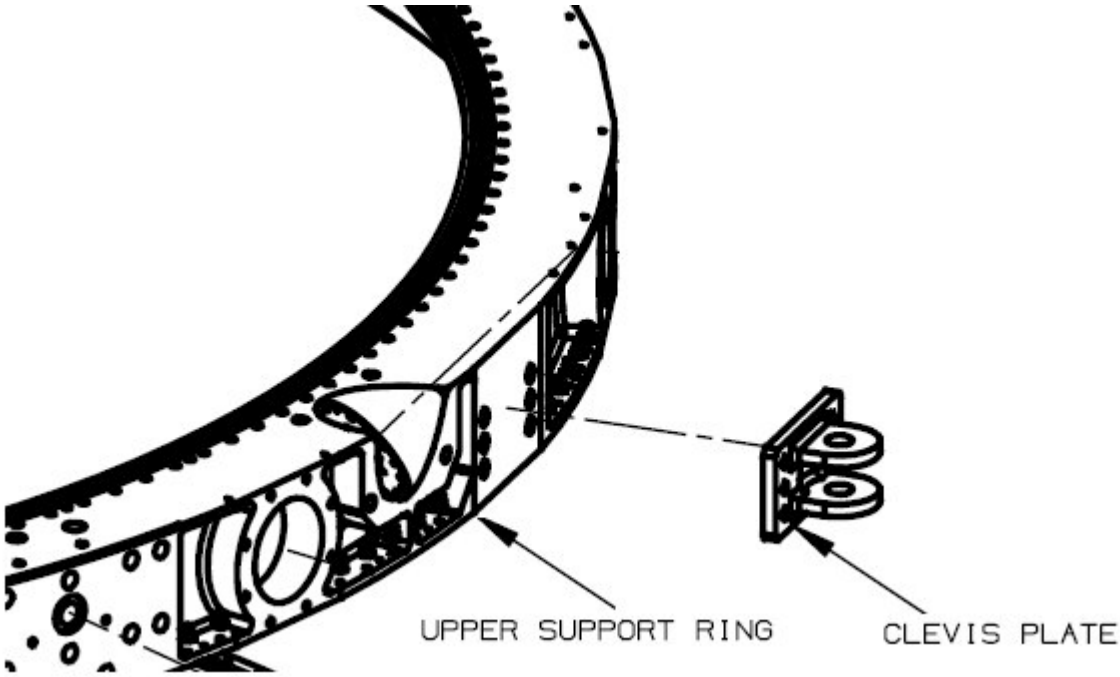

Figure 3.8-1 Location of Clevis Plate

Lug Analysis

Angle of applied force: $\beta := 69.692 \cdot deg$ (Ref. CAD Model)

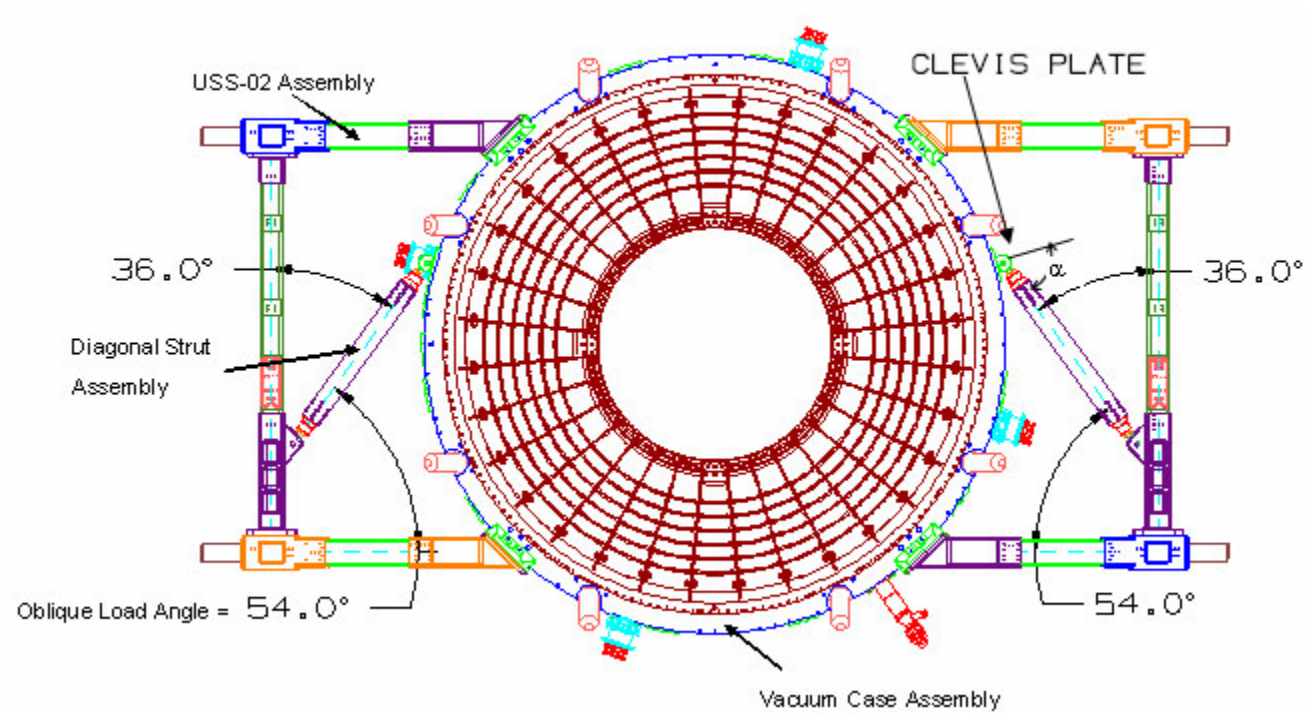

Figure 3.8-2 Angle of applied force

Angle of applied force: $\beta = 69.692\,\text{deg}$

Applied force: $f := 34052.77 \cdot \text{lbf}$

This load is the AMS 2-04 model_launch 1032

The applied load (f) is acted on the pin that is supported by two lugs. Therefore, the applied load on each lug is half of the total applied load (f/2).

Axial load is: $Py_lug := \frac{f}{2} \cdot \cos(\beta)$ $\quad Py_lug = 5909\,\text{lbf}$

Transverse load is: $Pz_lug := \frac{f}{2} \cdot \sin(\beta)$ $\quad Pz_lug = 15968\,\text{lbf}$

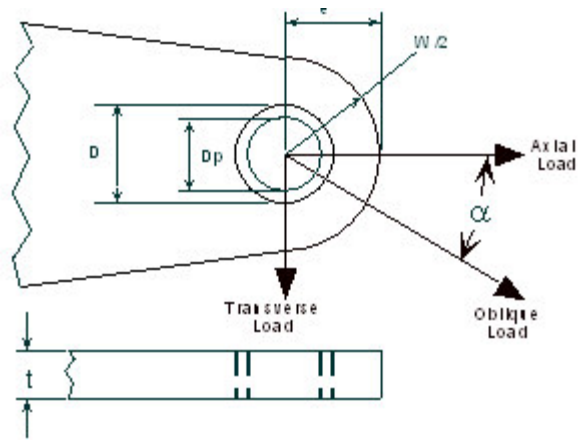

Figure 3.8-3 Typical Lug Dimension and Loading

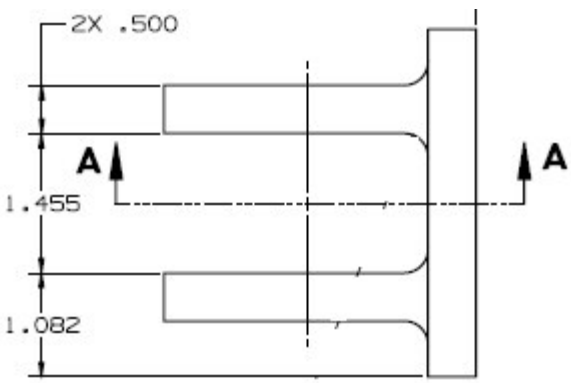

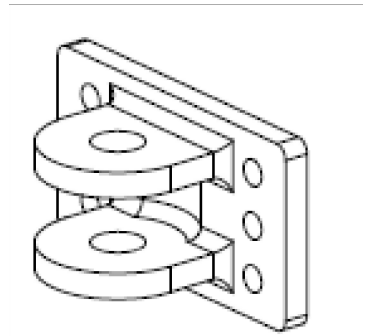

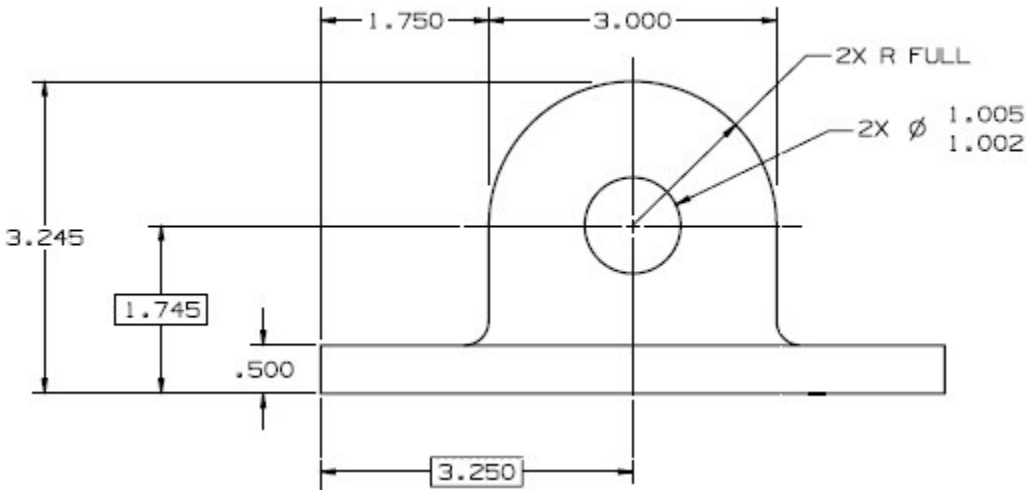

SECTION A-A

Figure 3.8-4 Clevis Plate

Distance from centerline to outside of lug: $e := (3.245 - 1.745) \cdot in$

$e = 1.5\,in$

Diameter of hole $D := 1.005 \cdot in$

Thickness of lug: $t := .5 \cdot in$

Twice e is: $W := 2 \cdot e$

$W = 3\,in$

Lug Material: A286

Tensile allowable, ultimate and yield $Ftu := 130000 \cdot psi \cdot 0.98$ $Fty := 85000 \cdot psi \cdot 0.98$

$Ftu = 127400\,psi$ $Fty = 83300\,psi$

Shear allowable $Fsu := 85000 \cdot psi \cdot 0.98$

$Fsu = 83300\,psi$

(Ref. MIL-HDBK-5HJ, table 6.2.1.0 (b))

The Expected temperature range is 40 to +120F (Ref. Appendix C2). 98% temperature de-rating is applied for launch.

Prepared By	Name	Date	Engineering and Science Contract Group	File Name
	K San	08/12/05		Clevisplate.mcd
Checked By	J. Krejci		*Structural Analysis Section*	Drawing No. SDG 39135790
Title	Clevis Plate			

Lug Analysis for Axial and Transverse Loads - Using NASA TM X-73305, Astronautic Structures Manual, Section B2, Lugs and Shear Pins

Part number: SDG 39135790
Material: **A286**

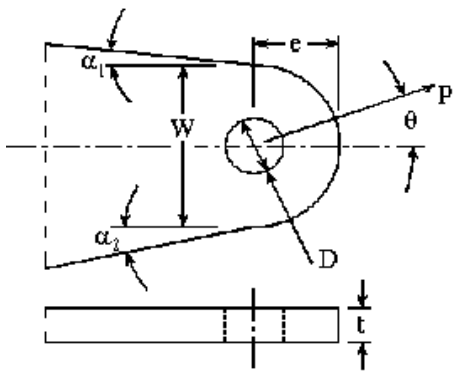

Generic Lug Dimensions

Factors of Safety

$SF_u := 1.4$ $SF_y := 1.1$

Geometry (See Figure)

$D := 1.005$ $e := 1.5$ $\beta_1 := 0 \cdot deg$

$t := .5$ $W := 3$ $\beta_2 := 0 \cdot deg$

Loading (See Figure)

$P := \frac{34052.77}{2}$ $u := 69.692 \cdot deg$

$P_{ax} := P \cdot \cos(u)$ $P_{tr} := P \cdot \sin(u)$

$P_{ax} = 5909.29$ $P_{tr} = 15968.033$

Material properties

$F_{tu} := 127400$ Ultimate tension allowable stress

$F_{ty} := 83300$ Yield tension allowable stress

Select material code number
(1 <= k <= 20, from table at right)

$k := 1$

k	Material
1)	4130,4140,4340 and 8630 steels, heat treated to 125,000 psi
2)	4130,4140,4340 and 8630 steels, heat treated to 150,000 psi
3)	4130,4140,4340 and 8630 steels, heat treated to 180,000 psi
4)	17-7PH (TH 1050), 17-4PH, PH15-7 Mo
5)	2014-T6 and 7075-T6 plate <= 0.5 in (L,T)
6)	2014-T6 and 7075-T6 plate > 0.5 in, <= 1.0 in (L,T)
	2014-T6 and 7075-T6 die forging (T)
	2014-T6 hand forged billet <= 36 sq in (T) (length < 3*width)
	7075-T6 extrusion (T)
7)	2014-T6 and 7075-T6 die forging (L)
	2014-T6 hand forged billet <= 36 sq in (L) (length < 3*width)
	7075-T6 bar and extrusion (L)
8)	2014-T6 hand forged billet <= 36 sq in (L) (length > 3*width)
9)	2014-T6 hand forged billet <= 36 sq in (T) (length > 3*width)
10)	2024-T3 and 2024-T4 plate <= 0.5 in (L,T)
11)	2024-T3 and 2024-T4 plate > 0.5 in, 2024-T4 (L,T)
12)	2024-T4 and 2024-T42 extrusion (L.T), 2024-T6 plate (L,T)
13)	7075-T6 bar (T)
14)	7075-T6 hand forged billet <= 16 sq in (L)
15)	7075-T6 hand forged billet <= 16 sq in (T)
16)	195-T6 and 356-T6 aluminum alloy casting
17)	220-T4 aluminum alloy casting
18)	2014-T6 and 7075-T6 plate > 1.0 in (L,T)
19)	7075-T6 hand forged billet > 16 sq in (T)
	2014-T6 hand forged billet > 36 sq in (T)
20)	7075-T6 hand forged billet > 36 sq in (L)

Lug coefficients are picked from charts as shown below. Data is included in the collapsed region

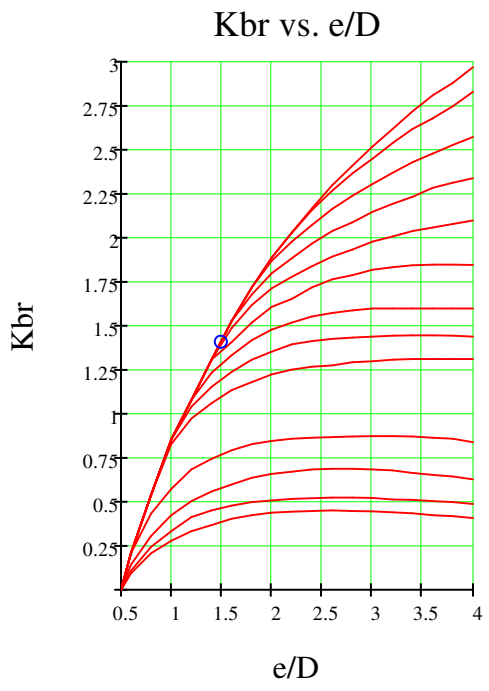

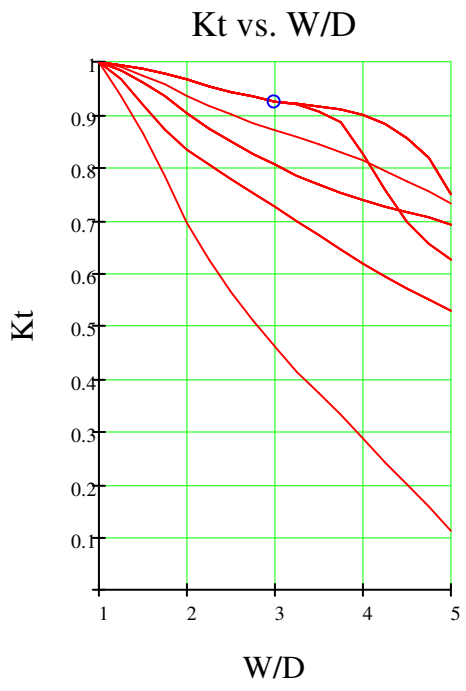

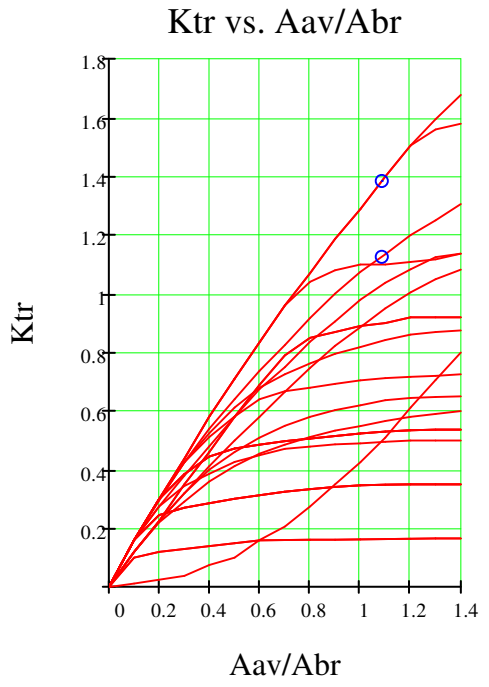

Warning : Points not visible are being extrapolated

Lug allowable, transverse direction $\frac{A_{av}}{A_{br}} = 1.086$ $K_{tru} = 1.384$ $K_{try} = 1.126$

Ultimate

$P_{tru} := K_{tru} \cdot F_{tu} \cdot D \cdot t$ $P_{tru} = 88592.817$

$R_{tru} := \frac{SF_u \cdot P_{tr}}{P_{tru}}$ $R_{tru} = 0.252$

Yield

$P_{try} := K_{try} \cdot F_{ty} \cdot D \cdot t$ $P_{try} = 47147.251$

$R_{try} := \frac{SF_y \cdot P_{tr}}{P_{try}}$ $R_{try} = 0.373$

Axial direction, tension $\frac{W}{D} = 2.985$ $K_{tu} = 0.926$ $K_{ty} = 0.926$

Ultimate

$P_{tu} := K_{tu} \cdot F_{tu} \cdot (W - D) \cdot t$ $P_{tu} = 117626.257$

Yield

$P_{ty} := K_{ty} \cdot F_{ty} \cdot (W - D) \cdot t$ $P_{ty} = 76909.476$

Axial direction, shear-bearing $\frac{e}{D} = 1.493$ $K_{bru} = 1.412$ $K_{bry} := 1.5$

Ultimate

$P_{bru} := K_{bru} \cdot F_{tu} \cdot D \cdot t$ $P_{bru} = 90380.745$

Yield

$P_{bry} := K_{bry} \cdot F_{ty} \cdot D \cdot t$ $P_{bry} = 62787.375$

Using the **minimum** axial capability $\frac{D}{t} = 2.01$

Ultimate

$P_{ax_ult} := \text{if}(P_{tu} < P_{bru}, P_{tu}, P_{bru})$ $P_{ax_ult} = 90380.745$

$R_{axu} := \frac{SF_u \cdot P_{ax}}{P_{ax_ult}}$ $R_{axu} = 0.092$

Yield

$P_{ax_yld} := \text{if}(P_{ty} < P_{bry}, P_{ty}, P_{bry})$ $P_{ax_yld} = 62787.375$

$R_{axy} := \frac{SF_y \cdot P_{ax}}{P_{ax_yld}}$ $R_{axy} = 0.104$

Then the margin of safety is computed as

$$MS_ult := \frac{1}{\left(R_{axu}^{1.6} + R_{tru}^{1.6}\right)^{.625}} - 1$$

$MS_ult = 2.54$

$$MS_yld := \frac{1}{\left(R_{axy}^{1.6} + R_{try}^{1.6}\right)^{.625}} - 1$$

$MS_yld = 1.49$

3.9 Feedthru Port Cover Plate

Section 3.9 Vacuum Case Feed-thru-port Cover Plate

Table 3.9.1-1 Minimum Margin of Safety Summary

Part / Dwg Number	Part Name / Description	Material & Heat Treatment	Critical Load Condition	Failure Mode	Margin of Safety	Reference Page	Comments
SDG39135791	VC Feed-thru-port Cover Plate	6061-T651 Al. Aly.	Inertia Loads (Liftoff/landing) plus pressure	Tension	25.9	3.9-39	

Notes: Factor of Safety is 2.0 for Ultimate and 1.25 for Yield

Part / Dwg Number	Part Name / Description	Material & Heat Treatment	Critical Load Condition	Failure Mode	Margin of Safety	Reference Page	Comments
NAS1351N3H16	VC Feed-thru-port Cover Plate Bolts	A286 0190-32 UNJF-3A	Inertia Loads (Liftoff/landing) plus pressure	Total Tension Yield	0.131	3.9-14	

Notes: Factor of Safety is 2.0 for Ultimate and 1.25 for Yield

3.9.1 Introduction

This section contains the structural verification of the feed-thru port cover plate for the AMS-02 vacuum case assembly (SDG39135791). The cover plates provide a closure and vacuum seal for the unused ports during flight operations and for ground operations during which the vacuum case has been evacuated. The ports are located on both the upper and lower support rings of the vacuum case.

The purpose of this document is to present the structural analysis and verification performed for the feed-thru port cover plate. This document describes in detail the approach taken to verify the structure and the requirements (load factors, factors of safety, material allowables, etc) taken into account when performing the analysis. The analyses will fulfill the requirements found in the *AMS-02 Structural Verification Plan for the Space Transportation system and International Space Station (JSC-28792, Rev. E)* and associated requirements documents.

3.9.2 Vacuum Case Feed-thru Port Fastener Analysis

The fasteners that attach components to the vacuum case feed-thru ports have loads induced by two sources: (1) differential pressure at the port and (2) inertia forces acting on the component.

The maximum differential pressure is 14.7 psi and occurs when the vacuum case has an internal vacuum and standard atmospheric pressure externally. The induced force is assumed to act normal to the plane of the feed-thru port. The diameter of the cover plate is 6.125 inches and the resultant force due to the differential pressure is 433 pounds acting normal to the plate.

The AMS-02 Structural Verification Plan provides load factors for small secondary structures. For the components that attach to a feed-thru port, the maximum weight is 34 pounds and the corresponding load factor is 31 g's. The SVP specifies that the induced load will act simultaneously in three axes with 100% of the maximum in one axis and 25% of the maximum in the two orthogonal axes. This corresponds to a maximum load of 1054 pounds in the primary axis and 263.5 pounds in both of the other axes.

The pressure loads in the normal direction were added to the various axis combinations of inertia loads produce a set of 24 load cases as shown in Table 3.9.2-1 and Table 3.9.2-2. These load cases bound the conditions for all components that attach to the feed-thru port, including the case when only a port cover is used.

The fasteners were assessed in accordance with the requirements of NSTS-08307. The computations were performed using MathCAD. The worksheets are included in Appendix A.

For the case with eight fasteners, all margins are positive and the minimum margin is 0.131 for total tension yield. For the fail-safe case, the bolt with the largest load (bolt 7) was removed from the pattern. Again, all margins are positive and the minimum margin is 0.504 for "combined shear, tension, and bending ultimate".

3.9.3 Vacuum Case Feed-thru Port Cover Analysis

The cover for the vacuum case feed-thru ports must sustain loads induced by differential pressure across the port and inertia forces acting directly on the port cover.

The circular port cover has an outer diameter of 6.125 inches and a thickness of 0.5 inches. It is manufactured from 6061 aluminum plate with a T651 temper. The weight of the cover is approximately 1.44 pounds.

The maximum differential pressure of 14.7 psi is induced when there is a vacuum inside the vacuum case and standard atmospheric pressure outside.

The AMS-02 Structural Verification Plan provides load factors for small secondary structures. For the port cover, the appropriate load factor is 40 g's and produces a resultant force of 57.8 pounds normal to the face of the port cover. To allow the inertia force to be conveniently combined with the pressure force for computational purposes, the inertia force is represented as a distributed force across the total area of the cover. The resulting distributed load is 1.96 psi.

The stress in a circular plate can be computed using a formula specified in Roark' Formulas for Stress and Strain, Seventh Edition. The pressure force and the inertia force are combined to produce a maximum applied load of 16.66 psi across the face of the port cover. The computed maximum stress is 780 psi. The structural margins associated with this small stress are large (i.e. greater than 20). The stress computations are provided in Appendix B.

Table 3.9.2-1 Description of Load Cases Showing Pressure and Inertia Combinations

Case ID	Axial (Fx)	Shear (Fy)	Shear (Fz)	Mx	My	Mz
1	Pressure + 100% inertia	+25% Inertia	+25% Inertia	0.0	0.0	0.0
2	Pressure + 100% inertia	-25% Inertia	+25% Inertia	0.0	0.0	0.0
3	Pressure + 100% inertia	+25% Inertia	-25% Inertia	0.0	0.0	0.0
4	Pressure + 100% inertia	-25% Inertia	-25% Inertia	0.0	0.0	0.0
5	Pressure - 100% inertia	+25% Inertia	+25% Inertia	0.0	0.0	0.0
6	Pressure - 100% inertia	-25% Inertia	+25% Inertia	0.0	0.0	0.0
7	Pressure - 100% inertia	+25% Inertia	-25% Inertia	0.0	0.0	0.0
8	Pressure - 100% inertia	-25% Inertia	-25% Inertia	0.0	0.0	0.0
9	Pressure + 25% Inertia	100% inertia	+25% Inertia	0.0	0.0	0.0

10	Pressure - 25% Inertia	100% inertia	+25% Inertia	0.0	0.0	0.0
11	Pressure + 25% Inertia	100% inertia	-25% Inertia	0.0	0.0	0.0
12	Pressure - 25% Inertia	100% inertia	-25% Inertia	0.0	0.0	0.0
13	Pressure + 25% Inertia	-100% inertia	+25% Inertia	0.0	0.0	0.0
14	Pressure - 25% Inertia	-100% inertia	+25% Inertia	0.0	0.0	0.0
15	Pressure + 25% Inertia	-100% inertia	-25% Inertia	0.0	0.0	0.0
16	Pressure - 25% Inertia	-100% inertia	-25% Inertia	0.0	0.0	0.0
17	Pressure + 25% Inertia	+25% Inertia	100% inertia	0.0	0.0	0.0
18	Pressure - 25% Inertia	+25% Inertia	100% inertia	0.0	0.0	0.0
19	Pressure + 25% Inertia	-25% Inertia	100% inertia	0.0	0.0	0.0
20	Pressure - 25% Inertia	-25% Inertia	100% inertia	0.0	0.0	0.0
21	Pressure + 25% Inertia	+25% Inertia	-100% inertia	0.0	0.0	0.0
22	Pressure - 25% Inertia	+25% Inertia	-100% inertia	0.0	0.0	0.0
23	Pressure + 25% Inertia	-25% Inertia	-100% inertia	0.0	0.0	0.0
24	Pressure - 25% Inertia	-25% Inertia	-100% inertia	0.0	0.0	0.0

Table 3.9.2-2 Load Cases for Assessment of the Fasteners for Components Mounted to Vacuum Case Feed-thru Ports

Case ID	Fx (lb)	Fy (lb)	Fz (lb)	Mx (in-lb)	My (in-lb)	Mz (in-lb)
1	1487.1	263.5	263.5	0.0	0.0	0.0
2	1487.1	-263.5	263.5	0.0	0.0	0.0
3	1487.1	263.5	-263.5	0.0	0.0	0.0
4	1487.1	-263.5	-263.5	0.0	0.0	0.0
5	-620.9	263.5	263.5	0.0	0.0	0.0
6	-620.9	-263.5	263.5	0.0	0.0	0.0
7	-620.9	263.5	-263.5	0.0	0.0	0.0
8	-620.9	-263.5	-263.5	0.0	0.0	0.0
9	696.6	1054.0	263.5	0.0	0.0	0.0
10	169.6	1054.0	263.5	0.0	0.0	0.0
11	696.6	1054.0	-263.5	0.0	0.0	0.0
12	169.6	1054.0	-263.5	0.0	0.0	0.0
13	696.6	-1054.0	263.5	0.0	0.0	0.0
14	169.6	-1054.0	263.5	0.0	0.0	0.0
15	696.6	-1054.0	-263.5	0.0	0.0	0.0
16	169.6	-1054.0	-263.5	0.0	0.0	0.0
17	696.6	263.5	1054.0	0.0	0.0	0.0
18	169.6	263.5	1054.0	0.0	0.0	0.0
19	696.6	-263.5	1054.0	0.0	0.0	0.0
20	169.6	-263.5	1054.0	0.0	0.0	0.0
21	696.6	263.5	-1054.0	0.0	0.0	0.0
22	169.6	263.5	-1054.0	0.0	0.0	0.0
23	696.6	-263.5	-1054.0	0.0	0.0	0.0
24	169.6	-263.5	-1054.0	0.0	0.0	0.0

Prepared By	Name C.Lauritzen	Date 09/17/07	Engineering and Science Contract Group *Structural Analysis Section*	File Name bolts_insert_RevC
Checked By	C. Bala			Drawing No. SDG39135791
Title	Bolts connecting Vacuum Case Feed-thru-Port Cover Plate to Vacuum Case Ring			

Vacuum Case Feed-thru-port Cover Bolts

There are a total of 8 fasteners attaching the vacuum case feed-thru-port cover to the vacuum case ring. The fasteners are NAS1351N3H16 (160 ksi).

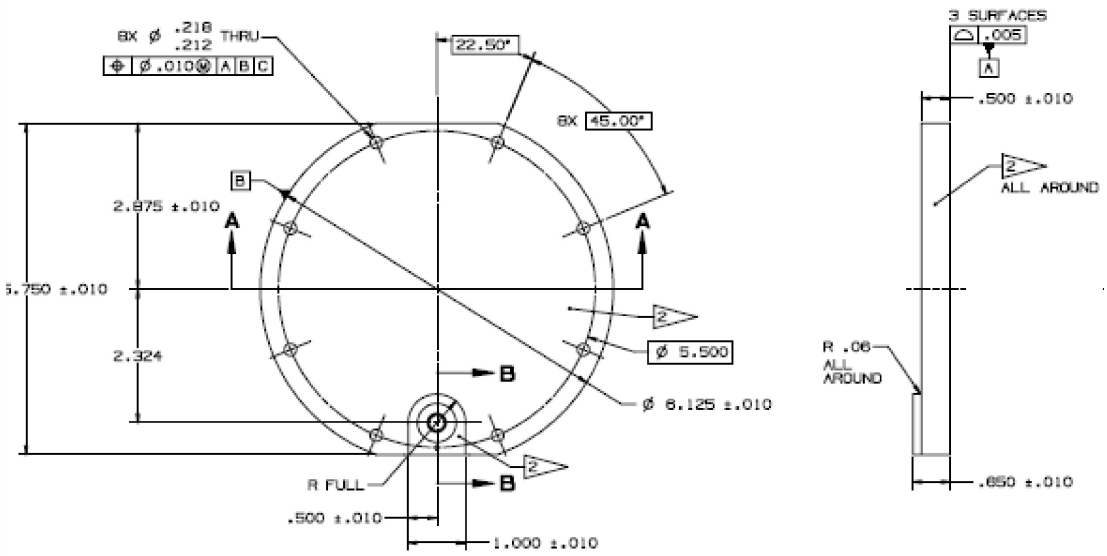

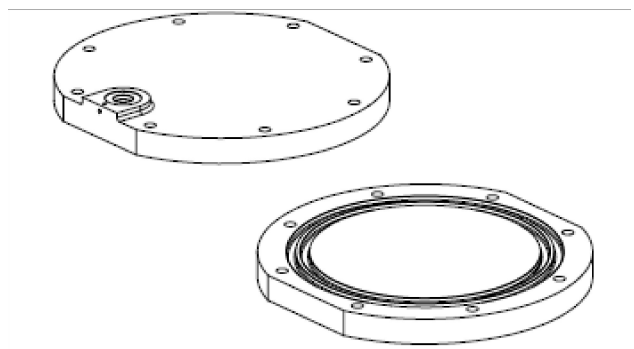

REFERENCE VIEWS

Bolt Geometry

$$\begin{array}{cc} \text{size} & \text{thread/in} \end{array}$$

$$bolt := \begin{pmatrix} 0.19 & 32 \\ 0.19 & 32 \\ 0.19 & 32 \\ 0.19 & 32 \\ 0.19 & 32 \\ 0.19 & 32 \\ 0.19 & 32 \\ 0.19 & 32 \end{pmatrix}$$

$i := 1 .. rows(bolt)$

$N_i := bolt_{i,2} \cdot \frac{1}{in}$ pitch of bolt

$D_i := bolt_{i,1} \cdot in$ bolt diameter

$At_i := \beta \cdot \left(\frac{D_i - 0.9743 \cdot \frac{1}{N_i}}{2} \right)^2$ Tensile Area of bolt

$As_i := \beta \cdot \left(\frac{D_i - 1.299038 \cdot \frac{1}{N_i}}{2} \right)^2$ Shear Area of bolt

Prepared By	Name	Date	Engineering and Science Contract Group	File Name
	C.Lauritzen	09/17/07		bolts_insert_RevC
Checked By	C. Bala		*Structural Analysis Section*	Draw ing No. SDG39135791
Title	Bolts connecting Vacuum Case Feed-thru-Port Cover Plate to Vacuum Case Ring			

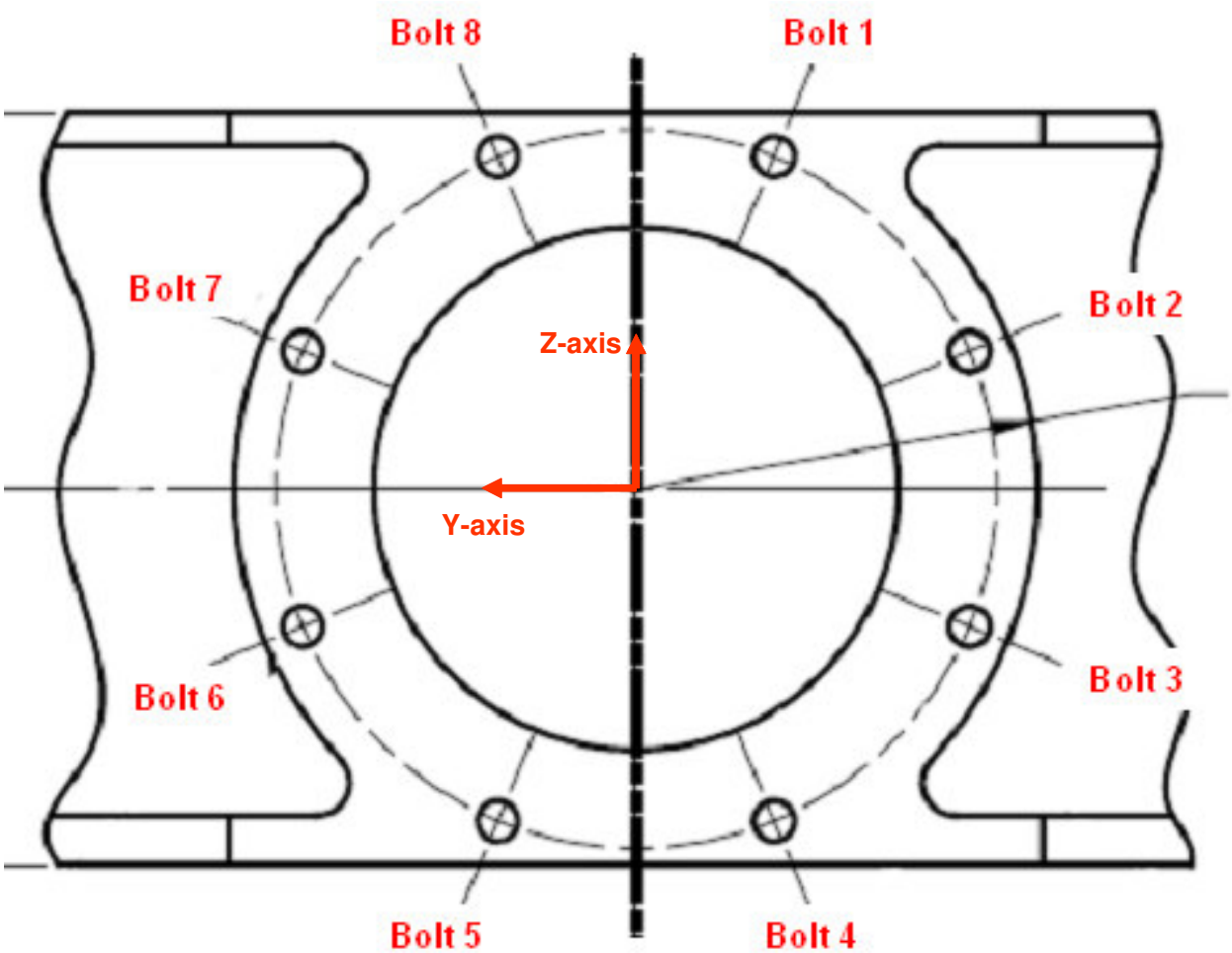

Bolt Pattern

Bolt no.	x co-ord	y co-ord	z co-ord
1	0.25	−1.0524	2.5407
2	0.25	−2.5407	1.0524
3	0.25	−2.5407	−1.0524
4	0.25	−1.0524	−2.5407
5	0.25	1.0524	−2.5407
6	0.25	2.5407	−1.0524
7	0.25	2.5407	1.0524
8	0.25	1.0524	2.5407

$$\begin{pmatrix}1\\2\\3\\4\\5\\6\\7\\8\end{pmatrix} \qquad x := \begin{pmatrix}0.25\\0.25\\0.25\\0.25\\0.25\\0.25\\0.25\\0.25\end{pmatrix}\cdot in \qquad y := \begin{pmatrix}-1.0524\\-2.5407\\-2.5407\\-1.0524\\1.0524\\2.5407\\2.5407\\1.0524\end{pmatrix}\cdot in \qquad z := \begin{pmatrix}2.5407\\1.0524\\-1.0524\\-2.5407\\-2.5407\\-1.0524\\1.0524\\2.5407\end{pmatrix}\cdot in$$

Location of applied forces and moments

$xforce := 0.0in$ $\quad yforce := 0.0in$ $\quad zforce := 0.0in$

$$cgload := \begin{pmatrix} xforce \\ yforce \\ zforce \end{pmatrix} \qquad cgload = \begin{pmatrix} 0 \\ 0 \\ 0 \end{pmatrix}$$

Center of gravity of bolt group

$$xcg := \frac{\sum_i x_i}{rows(x)} \qquad xcg = 0.25\,in \qquad ycg := \frac{\sum_i y_i}{rows(y)} \qquad ycg = 0\,in \qquad zcg := \frac{\sum_i z_i}{rows(z)} \qquad zcg = 0\,in$$

$$cg_{bolt} := \begin{pmatrix} xcg \\ ycg \\ zcg \end{pmatrix} \qquad cg_{bolt} = \begin{pmatrix} 0.25 \\ 0 \\ 0 \end{pmatrix} in$$

Load Vector

$$r_{load} := cgload - cg_{bolt} \qquad r_{load} = \begin{pmatrix} -0.25 \\ 0 \\ 0 \end{pmatrix} in$$

Distance from CG of Bolts to Individual Bolts for shear calculations

$$r_i := \sqrt{\left(z_i - zcg\right)^2 + \left(y_i - ycg\right)^2} \qquad r = \begin{pmatrix} 2.750 \\ 2.750 \\ 2.750 \\ 2.750 \\ 2.750 \\ 2.750 \\ 2.750 \\ 2.750 \end{pmatrix} in$$

Reading database file

The following file reads in all loads:

$data := READPRN("VC\text{-}port\text{-}cover\text{-}bolt\text{-}loads\text{-}v2.txt")$

$num_bolts := rows(bolt)$ $\qquad j := 1..rows(data)$

Loads from PSS loads model

Axial Load $\quad Fx_j := data_{j,3} \cdot lbf$

Shear in Y axis $\quad Fy_j := data_{j,4} \cdot lbf$

Shear in Z axis $\quad Fz_j := data_{j,5} \cdot lbf$

Element Identification $\quad ID_j := data_{j,1}$

Load Case Number $\quad LC_j := data_{j,2}$

Torsion $\quad Mx_j := data_{j,6} \cdot in \cdot lbf$

Moment about Y axis $\quad My_j := data_{j,8} \cdot in \cdot lbf$

Moment about Z axis $\quad Mz_j := data_{j,7} \cdot in \cdot lbf$

$ID_j := ID_j \cdot 1000 + 1$ Counter for number of bolts in pattern

Applied Bending Moment at Bolts $\quad M_j := 0 \cdot in \cdot lbf$

Format of Output File

The stack commands below are used to stack the element identifications (ID) and load cases (LC) in asending order per bolt. The element ID number is located in the first column and the LC numbers in the second column.

$ID := stack(ID, ID+1, ID+2, ID+3, ID+4, ID+5, ID+6, ID+7)$

$LC := stack(LC, LC, LC, LC, LC, LC, LC, LC)$

Prepared By	Name	Date	Engineering and Science Contract Group	File Name
	C.Lauritzen	09/17/07		bolts_insert_RevC
Checked By	C. Bala		*Structural Analysis Section*	Drawing No. SDG39135791
Title	Bolts connecting Vacuum Case Feed-thru-Port Cover Plate to Vacuum Case Ring			

Moment Distribution

$$M_{tot}^{\langle j \rangle} := \begin{pmatrix} Mx_j \\ My_j \\ Mz_j \end{pmatrix} + r_{load} \times \begin{pmatrix} Fx_j \\ Fy_j \\ Fz_j \end{pmatrix}$$

Use the cross-product to determine the additional moments acting on the fasteners.

$Mx_boltcg_j := M_{tot_{1,j}}$ $\quad$ $My_boltcg_j := M_{tot_{2,j}}$ $\quad$ $Mz_boltcg_j := M_{tot_{3,j}}$

Tension on bolts

$$Ftdirect_{i,j} := \begin{cases} 0 \cdot lbf & \text{if } Fx_j \le 0lbf \\ \dfrac{Fx_j}{num_bolts} & \text{otherwise} \end{cases}$$

Direct tensile load calculation - (The if statement checks for compression)

$$Fmz_{i,j} := \begin{cases} 0 \cdot lbf & \text{if } (y_i - ycg) = 0 \cdot in \\ \dfrac{\left[Mz_boltcg_j \cdot (y_i - ycg)\right] At_i}{\sum_i \left[(y_i - ycg)^2 \cdot At_i\right]} & \end{cases}$$

$$Fmy_{i,j} := \begin{cases} 0 \cdot lbf & \text{if } (z_i - zcg) = 0 \cdot in \\ \dfrac{My_boltcg_j \cdot (z_i - zcg) \cdot At_i}{\sum_i \left[(z_i - zcg)^2 \cdot At_i\right]} & \end{cases}$$

$$Ft_{i,j} := Ftdirect_{i,j} + Fmz_{i,j} + Fmy_{i,j}$$

Total Tensile load

Shear on bolts

Direct shear Loads $\quad$ $$Fsd_{i,j} := \frac{\sqrt{(Fy_j)^2 + (Fz_j)^2}}{num_bolts}$$

Secondary shear on bolts $\quad$ $$Fs_{i,j} := \frac{\left|Mx_boltcg_j\right| \cdot r_i \cdot As_i}{\sum_i \left[(r_i)^2 \cdot (As_i)\right]}$$

Total shear load $\quad$ $Fstot_{i,j} := Fs_{i,j} + Fsd_{i,j}$

The stack commands below are used to stack applied axial load (P), applied shear load (V), and applied moment (M) in asending order per bolt. These loads are put into an array with the element/bolt number and load case number from above.

$$P := \text{stack}\left[\left(Ft^T\right)^{\langle 1\rangle}, \left(Ft^T\right)^{\langle 2\rangle}, \left(Ft^T\right)^{\langle 3\rangle}, \left(Ft^T\right)^{\langle 4\rangle}, \left(Ft^T\right)^{\langle 5\rangle}, \left(Ft^T\right)^{\langle 6\rangle}, \left(Ft^T\right)^{\langle 7\rangle}, \left(Ft^T\right)^{\langle 8\rangle}\right]$$

$$V := \text{stack}\left[\left(Fstot^T\right)^{\langle 1\rangle}, \left(Fstot^T\right)^{\langle 2\rangle}, \left(Fstot^T\right)^{\langle 3\rangle}, \left(Fstot^T\right)^{\langle 4\rangle}, \left(Fstot^T\right)^{\langle 5\rangle}, \left(Fstot^T\right)^{\langle 6\rangle}, \left(Fstot^T\right)^{\langle 7\rangle}, \left(Fstot^T\right)^{\langle 8\rangle}\right]$$

$$M := \text{stack}(M, M, M, M, M, M, M, M)$$

The "Output" file outputs an array from left to right starting with the element identification (ID), Load case number (LC), applied load on the bolt (P), applied shear on the bolt (V), and applied moment on the bolt (M). The array is then written to a text file.

$$\text{Output} := \text{augment}\left(ID, LC, \frac{P}{lbf}, \frac{V}{lbf}, \frac{M}{in \cdot lbf}\right)$$

(Note: Since the ID and LC numbers are dimensionless, the P, V, and M values are divided by their units in order to make the array dimensionless.)

Size of the "Output" Array: $\text{rows}(\text{Output}) = 192$

$$\text{WRITEPRN}(\text{"VC_Cover-v2.txt"}) := \text{Output}$$

Prepared By	Name	Date	Engineering and Science Contract Group	File Name
	C.Lauritzen	09/17/07		bolts_insert_RevC
Checked By	C. Bala		*Structural Analysis Section*	Draw ing No. SDG39135791
Title	Bolts connecting Vacuum Case Feed-thru-Port Cover Plate to Vacuum Case Ring			

CHECK BOLTS (Bolts NAS1351N3H16,0.19x1L, Material-A-286, Insert MS51830CA201L, Washer NAS1149E0363R)

The array from the text file above is read:

$data := READPRN("VC_Cover-v2.txt")$

$s := 1..rows(data)$

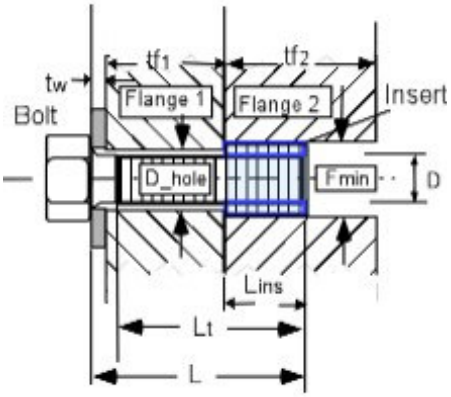

Flange 1: Cover Plate Feed-thru-port
Part number: SDG39135791
Material: Al Alloy 6061-T651

Flange 2: Upper VC Support Ring
Part number: SEG39135786/87
Material: Al Alloy 7050-T7451

Loads from Abort Landing Load Cases

Applied tensile load $P_s := data_{s,3} \cdot lbf$

Applied shear load $V_s := data_{s,4} \cdot lbf$

Applied bending moment $M_s := data_{s,5} \cdot in \cdot lbf$

Element Identification $ID_s := data_{s,1}$

Load Case Number $LC_s := data_{s,2}$

Factors of Safety

Ultimate $SFu := 2.0$

Yield $SFy := 1.25$

Joint Separation $SFsep := 1.2$

Fitting factor $FF := 1.15$

Temperature Data

Assembly $Temp_initial := 70 \cdot deg$

Maximum $Temp_max := 150 \cdot deg$

Minimum $Temp_min := 40 \cdot deg$

Bolt and Insert Data

Nominal diameter of bolt $D := 0.19 \cdot in$

Total length of bolt $L := 1.0 \cdot in$

Threaded length $Lt := 0.875 \cdot in$

(If bolt is fully threaded, input Lt = L)

Number of threads/inch $Nt := 32 \cdot \frac{1}{in}$

Length of insert $Lins := 0.312 \cdot in$

Min. external diameter of insert $Fmin := 0.249 \cdot in$

Depth of recess for insert $lr := 0.02 \cdot in$

This file uses the calculations shown in \\escfil02\2i11_mathcad\8307_bolts\thread_data.mcd

Thread Data File

Prepared By	Name C.Lauritzen	Date 09/17/07	Engineering and Science Contract Group *Structural Analysis Section*	File Name bolts_insert_RevC
Checked By	C. Bala			Drawing No. SDG39135791
Title	Bolts connecting Vacuum Case Feed-thru-Port Cover Plate to Vacuum Case Ring			

Washer Data

Thickness of washer $tw := 0.063 \cdot in$

Outer Diameter of washer $Dw := .438in$

Inner Diameter of washer $Dwi := 0.203 \cdot in$

Bolt head dia. across flats $dw := 0.0 \cdot in$
(used only if there is no washer)

Flange data

Thickness of flange 1 $tf1 := 0.5 \cdot in$
(Ref. SDG38117003)

Thickness of flange 2 $tf2 := .312in$ (insert length)

Diameter of hole $D_hole := 0.212 \cdot in$
(Ref. SEG38117007/38117009)

Note: If there is no washer, tw, Dw, and Dwi should be zero.

Material Property Data

Bolt

Temperature correction factor for bolt strength ultimate $TSu_bolt := 0.97$ yield $TSy_bolt := 0.97$
(Ref. MIL-HDBK-5H, fig. 6.2.1.1.1)

Bolt ultimate tensile allowable stress $Ftu_bolt := 160000 \cdot psi$ (Ref. NAS1958)

Bolt ultimate shear allowable stress $Fsu_bolt := 0.6 \cdot Ftu_bolt$

Bolt yield tensile allowable $Fty_bolt := 120000 \cdot psi$

Temperature correction factor for bolt modulus $TE_bolt := 0.97$

Modulus of elasticity of bolt $E_bolt := \left(29.1 \cdot 10^{6} \cdot psi\right)$ (Ref. MIL-HDBK-5H, table 6.2.1.0(b))

Thermal coeffecient for bolt: $u_bolt_hot := 9.1 \cdot 10^{-6} \cdot \frac{\frac{in}{in}}{deg}$ $u_bolt_cold := 8.65 \cdot 10^{-6} \cdot \frac{\frac{in}{in}}{deg}$

Insert

Temperature correction factor for insert strength $TS_ins := 0.97$

Ultimate tensile allowable stress $Ftu_ins := 140000 \cdot psi$

Ultimate shear allowable stress $Fsu_ins := 0.6 \cdot Ftu_ins$

Washer

Temperature correction factor for washer modulus $TE_washer := 1.0$

Modulus of elasticity of washer $E_washer := \left(29.1 \cdot 10^{6} \cdot psi\right)$

Prepared By	Name C.Lauritzen	Date 09/17/07	Engineering and Science Contract Group *Structural Analysis Section*	File Name bolts_insert_RevC
Checked By	C. Bala			Draw ing No. SDG39135791
Title	Bolts connecting Vacuum Case Feed-thru-Port Cover Plate to Vacuum Case Ring			

Flanges

Stiffness of the joint depends upon number of members in the grip of the fasteners, Modulus of elasticity of these members, and diameters of the bolt and the washer.

Temperature correction factor for flange 1 $Tf1E := 1.0$ (modulus)

Temperature correction factor for flange 2 $Tf2E := 1.0$ (modulus)

$Tf2s := 1.0$ (strength)

Shear Strength Allowable for flanges $Fsu_f2 := 42000 \cdot psi$

Modulus of elasticity for the parts in the joint (Ref. MIL-HDBK-5H, table 3.6.2.0(b2)) $E_flange1 := \left(9.9 \cdot 10^{6} \cdot psi\right)$ $E_flange2 := \left(10.3 \cdot 10^{6} \cdot psi\right)$

Coefficient of thermal expansion for flanges (Ref. MIL-HDBK-5H, fig. 3.6.2.0) $u_flange1_hot := 12.85 \cdot 10^{-6} \cdot \frac{\frac{in}{in}}{deg}$ $u_flange2_hot := 12.8 \cdot 10^{-6} \cdot \frac{\frac{in}{in}}{deg}$

$u_flange1_cold := 12.25 \cdot 10^{-6} \cdot \frac{\frac{in}{in}}{deg}$ $u_flange2_cold := 12.1 \cdot 10^{-6} \cdot \frac{\frac{in}{in}}{deg}$

Torque/Preload data

Maximum torque (60% of yield) $Tmax := 41 \cdot in \cdot lbf$

Minimum torque (85% of max. torque) $Tmin := 34.85 \cdot in \cdot lbf$

Torque coefficient: $k := 0.15$

Loading plane factor: $n := .5$

Preload Uncertainty: $:= 0.25$

This file uses the calculations shown in \\escfil02\2i11_mathcad\8307_bolts\multi_bolt_stiffness_insert_RevC

Insert Stiffness File

Prepared By	Name	Date		File Name
	C.Lauritzen	09/17/07	Engineering and Science Contract Group	bolts_insert_RevC
Checked By	C. Bala		*Structural Analysis Section*	Draw ing No. SDG39135791
Title	Bolts connecting Vacuum Case Feed-thru-Port Cover Plate to Vacuum Case Ring			

Bolt Load data

Bolt/joint stiffness factor $= = 0.184$

Max. preload $PLDmax = 1955.7\,lbf$

Min. preload $PLDmin = 771.2\,lbf$

Joint separation load $max(Psep) = 232.454\,lbf$

Max. load on the bolt(ultimate) $max(Pb) = 1996.7\,lbf$

Max. load on the bolt(yield) $max(Pby) = 1981.4\,lbf$

Bolt ultimate tensile strength $PAt = 2987.4\,lbf$

Preload due to temperature $Pthr_pos = 157.4\,lbf$

$Pthr_neg = -56\,lbf$

Uncertainty factor $= 0.25$

Torque coefficient $k = 0.15$

Loading plane factor $n = 0.5$

Thread shear pullout load of bolt or insert $Pths = 9057.1\,lbf$

Thread shear pullout load in parent metal $Ppths = 5125.3\,lbf$

Length_check = "Bolt length is sufficient"

Summary of Margins for bolt:

Joint separation	$MS_min_{1,1} = 2.178$	Direct Thread shear Ultimate	$MS_min_{6,1} = 10.000$
Direct Tension Ultimate	$MS_min_{2,1} = 5.705$	Total Thread shear Ultimate	$MS_min_{7,1} = 1.567$
Direct Tension Yield	$MS_min_{3,1} = 7.046$	Shear Ultimate	$MS_min_{8,1} = 4.23$
Total Tension Ultimate	$MS_min_{4,1} = 0.496$	Bending Ultimate	$MS_min_{9,1} = 10$
Total Tension Yield	$MS_min_{5,1} = 0.131$	Combined shear, tension and bending ultimate	$MS_min_{10,1} = 0.492$

Determination of the smallest margin of safety for the bolt, and the failure mode:

$MSbolt := min(MS)$

$MSbolt = 0.131$ Minimum Margin of Safety

Failure_Mode = "Total Tension Yield"

$MS_min_ID = 1007$ Bolt Number 7 for Minimum Margin

$MS_min_LC = 2$ Load Case Number 2 for Minimum Margin

$MS_min_P = 193.7$ Applied Tensile Load for Minimum Margin

$MS_min_V = 46.6$ Applied Shear Load for Minimum Margin

$MS_min_M = 0$ Applied Bending Moment for Minimum Margin

Vacuum Case Feed-thru-port Cover Bolts

Fail-safe Analysis

There are a total of 8 fasteners attaching the vacuum case feed-thru-port cover to the vacuum case ring. The fasteners are NAS1351N3H16 (160 ksi).

In the baseline analysis, bolt 7 had the lowest margin. For the fail-safe analysis, this bolt is assumed to fail first and has been removed from the pattern. The fail-safe analysis was performed with SFult = 1.0 and SFsep 1.0.

Bolt Geometry

$$\begin{pmatrix} 1 \\ 2 \\ 3 \\ 4 \\ 5 \\ 6 \\ 8 \end{pmatrix} \quad \text{bolt2} := \begin{array}{c} \begin{array}{cc} \text{size} & \text{thread/in} \end{array} \\ \begin{pmatrix} 0.19 & 32 \\ 0.19 & 32 \\ 0.19 & 32 \\ 0.19 & 32 \\ 0.19 & 32 \\ 0.19 & 32 \\ 0.19 & 32 \end{pmatrix} \end{array}$$

$$s := 1 .. \text{rows}(\text{bolt2})$$

$N2_s := \text{bolt2}_{s,2} \cdot \frac{1}{\text{in}}$ pitch of bolt $\quad D2_s := \text{bolt2}_{s,1} \cdot \text{in}$ bolt diameter

$$At2_s := \beta \cdot \left(\frac{D2_s - 0.9743 \cdot \frac{1}{N2_s}}{2} \right)^2$$ Tensile Area of bolt

$$As2_s := \beta \cdot \left(\frac{D2_s - 1.299038 \cdot \frac{1}{N2_s}}{2} \right)^2$$ Shear Area of bolt

Prepared By	Name	Date	Engineering and Science Contract Group	File Name
	C.Lauritzen	09/17/07		bolts_insert_RevC
Checked By	C. Bala		*Structural Analysis Section*	Draw ing No. SDG39135791
Title	Bolts connecting Vacuum Case Feed-thru-Port Cover Plate to Vacuum Case Ring			

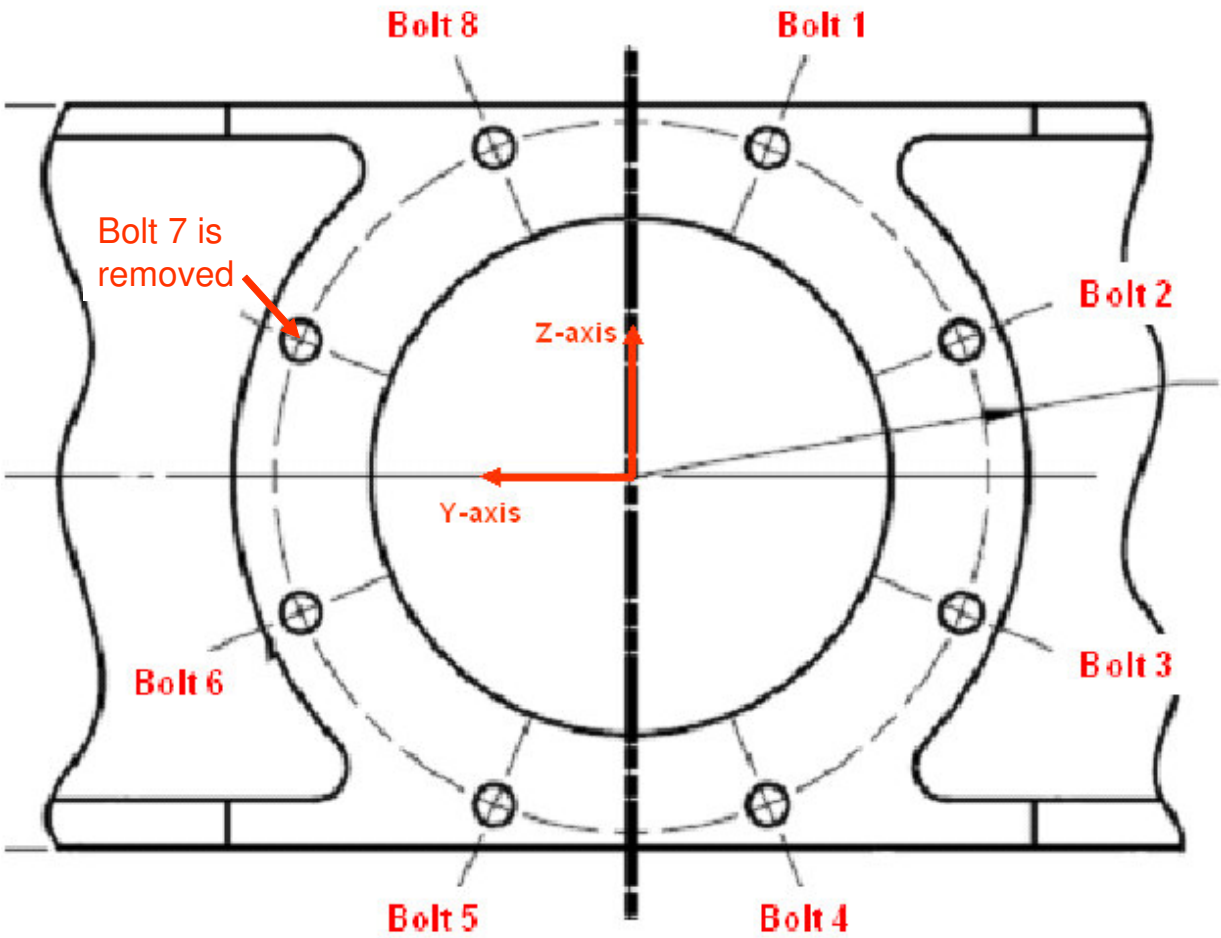

Bolt Pattern with Bolt 7 Removed

Bolt no.	x co-ord	y co-ord	z co-ord
1	0.25	−1.0524	2.5407
2	0.25	−2.5407	1.0524
3	0.25	−2.5407	−1.0524
4	0.25	−1.0524	−2.5407
5	0.25	1.0524	−2.5407
6	0.25	2.5407	−1.0524
8	0.25	1.0524	2.5407

$$x2 := \begin{pmatrix} 0.25 \\ 0.25 \\ 0.25 \\ 0.25 \\ 0.25 \\ 0.25 \\ 0.25 \end{pmatrix} \cdot in \qquad y2 := \begin{pmatrix} -1.0524 \\ -2.5407 \\ -2.5407 \\ -1.0524 \\ 1.0524 \\ 2.5407 \\ 1.0524 \end{pmatrix} \cdot in \qquad z2 := \begin{pmatrix} 2.5407 \\ 1.0524 \\ -1.0524 \\ -2.5407 \\ -2.5407 \\ -1.0524 \\ 2.5407 \end{pmatrix} \cdot in$$

Location of applied forces and moments

$xforce2 := 0.0in$ $\quad yforce2 := 0.0in$ $\quad zforce2 := 0.0in$

$$cgload2 := \begin{pmatrix} xforce2 \\ yforce2 \\ zforce2 \end{pmatrix} \qquad cgload2 = \begin{pmatrix} 0 \\ 0 \\ 0 \end{pmatrix}$$

Center of gravity of bolt group

$$xcg2 := \frac{\sum_s x2_s}{rows(x2)} \qquad xcg2 = 0.25\,in \qquad ycg2 := \frac{\sum_s y2_s}{rows(y2)} \qquad ycg2 = -0.363\,in \qquad zcg2 := \frac{\sum_s z2_s}{rows(z2)} \qquad zcg2 = -0.15\,in$$

$$cg_{bolt2} := \begin{pmatrix} xcg2 \\ ycg2 \\ zcg2 \end{pmatrix} \qquad cg_{bolt2} = \begin{pmatrix} 0.25 \\ -0.363 \\ -0.15 \end{pmatrix} in$$

Load Vector

$$r_{load2} := cgload2 - cg_{bolt2} \qquad r_{load2} = \begin{pmatrix} -0.25 \\ 0.363 \\ 0.15 \end{pmatrix} in$$

Distance from CG of Bolts to Individual Bolts for shear calculations

$$r2_s := \sqrt{\left(z2_s - zcg2\right)^2 + \left(y2_s - ycg2\right)^2} \qquad r2_s = \begin{pmatrix} 2.778 \\ 2.488 \\ 2.357 \\ 2.488 \\ 2.778 \\ 3.041 \\ 3.041 \end{pmatrix} in$$

Reading database file

The following file reads in all loads:

data := READPRN("VC-port-cover-bolt-loads-v2.txt")

num_bolts2 := rows(bolt2) $\quad q := 1..\text{rows}(\text{data})$ $\quad ID2 := 0 \quad LC2 := 0$

num_bolts2 = 7 $\quad \text{rows}(\text{data}) = 24$

Loads from PSS loads model

Axial Load $\quad Fx2_q := data_{q,3} \cdot lbf$

Torsion $\quad Mx2_q := data_{q,6} \cdot in \cdot lbf$

Shear in Y axis $\quad Fy2_q := data_{q,4} \cdot lbf$

Moment about Y axis $\quad My2_q := data_{q,8} \cdot in \cdot lbf$

Shear in Z axis $\quad Fz2_q := data_{q,5} \cdot lbf$

Moment about Z axis $\quad Mz2_q := data_{q,7} \cdot in \cdot lbf$

Element Identification $\quad ID2_q := data_{q,1}$ $\quad ID2_q := ID2_q \cdot 1000 + 1$ Counter for number of bolts in pattern

Load Case Number $\quad LC2_q := data_{q,2}$

Applied Bending Moment at Bolts $\quad M2_q := 0 \cdot in \cdot lbf$

Format of Output File

The stack commands below are used to stack the element identifications (ID2) and load cases (LC2) in ascending order per bolt. The element ID number is located in the first column and the LC numbers in the second column.

$ID2 := \text{stack}(ID2, ID2+1, ID2+2, ID2+3, ID2+4, ID2+5, ID2+7)$

$LC2 := \text{stack}(LC2, LC2, LC2, LC2, LC2, LC2, LC2)$

Moment Distribution

$$M_{tot2}^{\langle q \rangle} := \begin{pmatrix} Mx2_q \\ My2_q \\ Mz2_q \end{pmatrix} + r_{load2} \times \begin{pmatrix} Fx2_q \\ Fy2_q \\ Fz2_q \end{pmatrix}$$

Use the cross-product to determine the additional moments acting on the fasteners.

$Mx_boltcg2_q := M_{tot_{1,q}}$ $\quad$ $My_boltcg2_q := M_{tot_{2,q}}$ $\quad$ $Mz_boltcg2_q := M_{tot_{3,q}}$

Tension on bolts

$$Ftdirect2_{s,q} := \begin{cases} 0 \cdot lbf & \text{if } Fx2_q \le 0lbf \\ \dfrac{Fx2_q}{num_bolts2} & \text{otherwise} \end{cases}$$

Direct tensile load calculation - (The if statement checks for compression)

$$Fmz2_{s,q} := \begin{cases} 0 \cdot lbf & \text{if } \left(y2_s - ycg2\right) = 0 \cdot in \\ \dfrac{\left[Mz_boltcg2_q \cdot \left(y2_s - ycg2\right)\right] At2_s}{\sum_s \left[\left(y2_s - ycg2\right)^2 \cdot At2_s\right]} & \end{cases}$$

$$Fmy2_{s,q} := \begin{cases} 0 \cdot lbf & \text{if } \left(z2_s - zcg2\right) = 0 \cdot in \\ \dfrac{My_boltcg2_q \cdot \left(z2_s - zcg2\right) \cdot At2_s}{\sum_s \left[\left(z2_s - zcg2\right)^2 \cdot At2_s\right]} & \end{cases}$$

$$Ft2_{s,q} := Ftdirect2_{s,q} + Fmz2_{s,q} + Fmy2_{s,q}$$

Total Tensile load

Shear on bolts

Direct shear Loads

$$Fsd2_{s,q} := \frac{\sqrt{\left(Fy2_q\right)^2 + \left(Fz2_q\right)^2}}{num_bolts2}$$

Secondary shear on bolts

$$Fs2_{s,q} := \frac{\left|Mx_boltcg2_q\right| \cdot r2_s \cdot As2_s}{\sum_s \left[\left(r2_s\right)^2 \cdot \left(As2_s\right)\right]}$$

Total shear load

$$Fstot2_{s,q} := Fs2_{s,q} + Fsd2_{s,q}$$

The stack commands below are used to stack applied axial load (P2), applied shear load (V2), and applied moment (M2) in ascending order per bolt. These loads are put into an array with the element/bolt number and load case number from above.

$$P2 := \text{stack}\left[\left(Ft2^T\right)^{\langle 1\rangle}, \left(Ft2^T\right)^{\langle 2\rangle}, \left(Ft2^T\right)^{\langle 3\rangle}, \left(Ft2^T\right)^{\langle 4\rangle}, \left(Ft2^T\right)^{\langle 5\rangle}, \left(Ft2^T\right)^{\langle 6\rangle}, \left(Ft2^T\right)^{\langle 7\rangle}\right]$$

$$V2 := \text{stack}\left[\left(Fstot2^T\right)^{\langle 1\rangle}, \left(Fstot2^T\right)^{\langle 2\rangle}, \left(Fstot2^T\right)^{\langle 3\rangle}, \left(Fstot2^T\right)^{\langle 4\rangle}, \left(Fstot2^T\right)^{\langle 5\rangle}, \left(Fstot2^T\right)^{\langle 6\rangle}, \left(Fstot2^T\right)^{\langle 7\rangle}\right]$$

$$M2 := \text{stack}(M2, M2, M2, M2, M2, M2, M2)$$

The "Output2" file outputs an array from left to right starting with the element identification (ID2), Load case number (LC2), applied load on the bolt (P2), applied shear on the bolt (V2), and applied moment on the bolt (M2). The array is then written to a text file.

$$Output2 := \text{augment}\left(ID2, LC2, \frac{P2}{lbf}, \frac{V2}{lbf}, \frac{M2}{in \cdot lbf}\right)$$

(Note: Since the ID and LC numbers are dimensionless, the P2, V2, and M2 values are divided by their units in order to make the array dimensionless.)

Size of the "Output" Array: $\text{rows}(Output2) = 168$

(The output size corresponds to 24 loads cases times 7 bolts which equals 168 total items.)

$$\text{WRITEPRN}(\text{"VC_Cover_FS-v2.txt"}) := Output2$$

Fail-Safe Analysis

Loads from 24 combinations of pressure and inertia load cases

The array from the text file above is read:

$$data_fs := \text{READPRN}(\text{"VC_Cover_FS-v2.txt"})$$

$$s := 1 .. \text{rows}(data_fs)$$

Applied tensile load $P_FS_s := data_fs_{s,3} \cdot lbf$

Applied shear load $V_FS_s := data_fs_{s,4} \cdot lbf$

Applied bending moment $M_FS_s := data_fs_{s,5} \cdot in \cdot lbf$

Element Identification $ID_FS_s := data_fs_{s,1}$

Load Case Number $LC_FS_s := data_fs_{s,2}$

$\text{rows}(data_fs) = 168$

Factors of Safety

Ultimate $SFu_FS := 1.0$

Joint Separation $SFsep_FS := 1.0$ Fitting factor $FF := 1.15$

Temperature Data

Assembly $Temp_initial := 70 \cdot deg$

Maximum $Temp_max := 150 \cdot deg$

Minimum $Temp_min := 40 \cdot deg$

This file uses the calculations shown in \\escfil02\2i11_mathcad\8307_bolts\ multi_bolt_stiffness_insert_FS_RevA

Fail-Safe Stiffness File

Bolt Fail-safe Load data

Joint separation load $\max(Psep_FS) = 222.855\,lbf$ $\max(P_FS) = 222.855\,lbf$

Max. load on the bolt(ultimate) $\max(Pb_FS) = 1979.3\,lbf$ $\max(V_FS) = 155.205\,lbf$

Summary of fail-safe Margins for bolt:

Joint separation $MS_minFS_{1,1} = 2.314$

Direct Tension Ultimate $MS_minFS_{2,1} = 10.000$

Total Tension Ultimate $MS_minFS_{3,1} = 0.509$

Direct Thread shear Ultimate $MS_minFS_{4,1} = 10$

Total Thread shear Ultimate $MS_minFS_{5,1} = 1.589$

Shear Ultimate $MS_minFS_{6,1} = 8.15$

Bending Ultimate $MS_minFS_{7,1} = 10$

Combined shear, tension and bending ultimate $MS_minFS_{8,1} = 0.509$

Prepared By	Name	Date		File Name
	C.Lauritzen	09/17/07		bolts_insert_RevC
Checked By	C. Bala		**Engineering and Science Contract Group** *Structural Analysis Section*	Draw ing No. SDG39135791
Title	Bolts connecting Vacuum Case Feed-thru-Port Cover Plate to Vacuum Case Ring			

Determination of the smallest fail-safe margin of safety for the bolt, and the failure mode:

MSbolt_FS := min(MS_FS)

MSbolt_FS = 0.509 Failure_Mode_FS = "Combined Shear Tension Bending Ultimate"

MS_min_ID = 1006 Bolt Number 6 for Minimum Margin

MS_min_LC = 4 Load Case Number 4 for Minimum Margin

MS_min_P = 222.9 Applied Tensile Load for Minimum Margin

MS_min_V = 53.2 Applied Shear Load for Minimum Margin

MS_min_M = 0 Applied Bending Moment for Minimum Margin

Prepared By	Name C.Lauritzen	Date 09/17/07	Engineering and Science Contract Group *Structural Analysis Section*	File Name bolts_insert_RevC
Checked By	C. Bala			Drawing No. SDG39135791
Title	Vacuum Case Feed-thru-Port Cover Plate			

Loads on the Covers for the Vacuum Case Feed-thru Ports

During flight operatations, the vacuum case port covers serve as a closure for unused ports. All of the ports are located on either the upper or lower support ring of the vaccuum case.

<u>Port Cover Characteristics</u>

1. Circular plate with outer diameter of 6.125 inches and thickness of 0.50 inches.
2. Material: 6061 T651 Aluminum plate

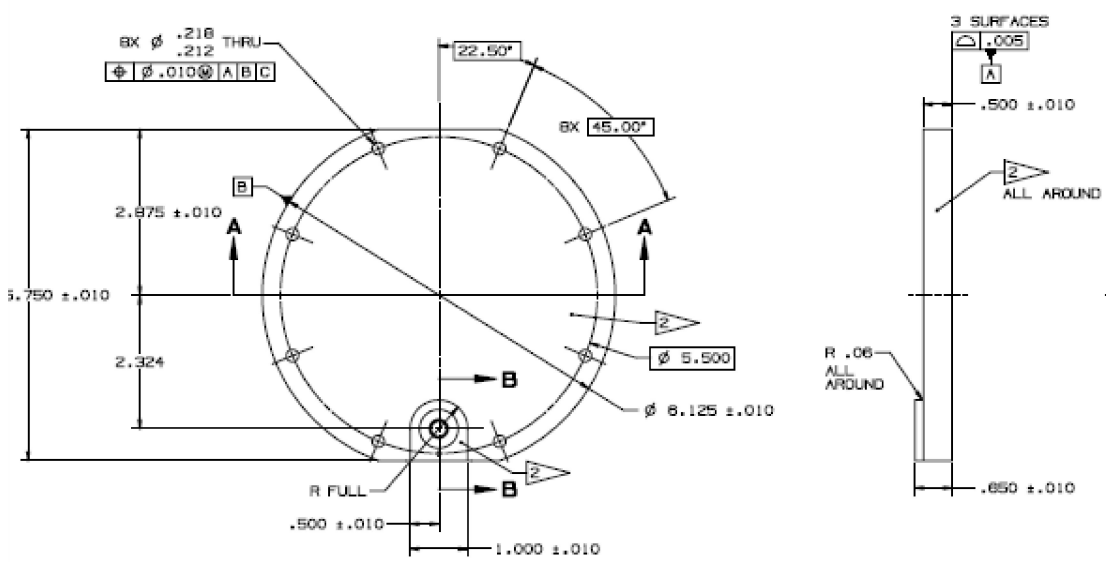

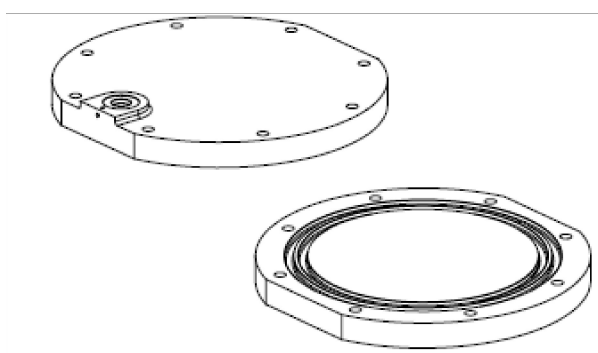

REFERENCE VIEWS

Compute port cover weight:

$E := 9.9\,10^{6}\,psi \qquad \beta := 0.33 \qquad u := 0.098\,pci$

$d := 6.125\,in \qquad t := 0.5\,in$

$weight := \left(\frac{d}{2}\right)^{2} t \cdot u \qquad weight = 1.444\,lbf$

Compute force on the port cover:

$g_load := 40$

$Force := weight \cdot g_load \qquad Force = 57.751\,lbf$

Represent inertia load as a distributed force:

$Area := \left(\frac{d}{2}\right)^{2} \qquad Area = 29.465\,in^{2}$

$dist_force := \frac{Force}{Area} \qquad dist_force = 1.96\,psi$

Compute pressure differential across port:

$p_outside := 14.7\,psi \qquad p_inside := 0\,psi$

$delta_p := p_outside - p_inside$

$delta_p = 14.7\,psi$

Compute total load acting on cover plate:

$Total_load := dist_force + delta_p$

$Total_load = 16.66\,psi$

Stresses for the Vacuum Case Feed-thru Port Covers

The formulas for stress of a flat circular plate of constant thickness are given in Table 24 of "Roark's Formulas for Stress and Strain". Case 10a provides the formulas for a solid circular plate that is simply supported at the edge and has a uniformly distributed pressure across the face. These formulas were implemented as an electronic book for MathCAD by MathSoft Inc. and have been included on the following pages to compute the stresses in the cover plate.

The material allowables for Al 6061 T651 plate are 35 ksi for yield and 41 ksi for ultimate. (Reference: Table 3.6.2.0 from MIL-HDBK-5J)

The factors of safety are 1.4 for yield and 2.0 for ultimate.

$MAu := 42000.psi$ $\quad$ $MAy := 35000psi$

$FSu := 2.0$ $\quad$ $FSy := 1.25$

NOTE --- this begins the section that was extracted from the MathSoft electronic book of Roark equations.

Table 24 Formulas for shear, moment and deflection of flat circular plates of constant thickness

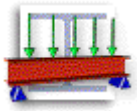

Case 10a Solid Circular Plate Simply Supported; Uniformly Distributed Pressure from r_o to a

Solid circular plate

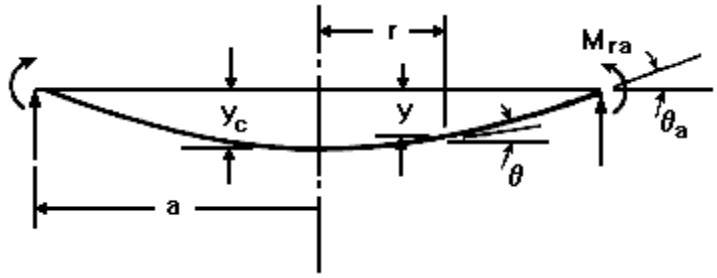

Uniformly distributed pressure from r_o to a

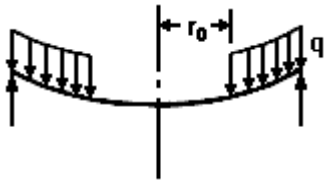

Notation file

Provides a description of Table 24 and the notation used.

Enter dimensions, properties and loading

Plate dimensions:

thickness: $t \equiv 0.5 \cdot in$

radius: $a \equiv \frac{6.125}{2} \cdot in$

Applied uniform pressure: $q \equiv 16.66 \cdot psi$

Modulus of elasticity: $E \equiv 9.9 \cdot 10^6 \cdot \frac{lbf}{in^2}$

Poisson's ratio: $\beta \equiv 0.33$

Radial location of applied load: $r_o \equiv 0.0001 \cdot in$

Constants

Shear modulus: $G \equiv \frac{E}{2 \cdot (1 + \beta)}$

D is a plate constant used in determining boundary values; it is also used in the general equations for deflection, slope, moment and shear. K_{sro} is the tangential shear constant used in determining the deflection due to shear.

$$D \equiv \frac{E \cdot t^3}{12 \cdot \left(1 - \beta^2\right)} \qquad D = 1.157 \times 10^5 \, lbf \cdot in$$

$$K_{sro} \equiv if\left[r_o > 0, -0.30 \cdot \left[1 - \left(\frac{r_o}{a}\right)^2 \cdot \left(1 + 2 \cdot \ln\left(\frac{a}{r_o}\right)\right)\right], -0.30\right] \qquad K_{sro} = -0.3$$

Boundary values

The G_n and L_n functions used in the equations below are defined at the end of this document.

M_r is radial moment, Q is shear, y is deflection and θ is slope.

Due to bending:

At the edge of the plate (a):

$M_{ra} := 0 \cdot \frac{lbf \cdot in}{in}$ $\qquad M_{ra} = 0 \frac{lbf \cdot in}{in}$

$Q_a := \frac{-q}{2 \cdot a} \cdot \left(a^2 - r_o^2\right)$ $\qquad Q_a = -25.511 \frac{lbf}{in}$

$y_a := 0 \cdot in$ $\qquad y_a = 0\, in$

$=_a := \frac{q}{8 \cdot D \cdot a \cdot (1 + \beta)} \cdot \left(a^2 - r_o^2\right)^2$ $\qquad =_a = 0.022\, deg$

At the center of the plate (c):

$M_c := q \cdot a^2 \cdot L_{17}$ $\qquad M_c = 32.52 \frac{lbf \cdot in}{in}$

$y_c := \frac{-q \cdot a^4}{2 \cdot D} \cdot \left(\frac{L_{17}}{1 + \beta} - 2 \cdot L_{11}\right)$ $\qquad y_c = -7.929 \times 10^{-4}\, in$

Due to tangential shear stresses:

$y_{sro} := \frac{K_{sro} \cdot q \cdot a^2}{t \cdot G}$ $\qquad y_{sro} = -2.519 \times 10^{-5}\, in$

General formulas and graphs for deflection, slope, moment, shear and stress as a function of r

Define r, the range of the radius:

$$r \equiv \frac{a}{100}, \frac{a}{50} .. a$$

Deflection

$$y(r) := y_c + \frac{M_c \cdot r^2}{2 \cdot D \cdot (1 + \beta)} + LT_y(r)$$

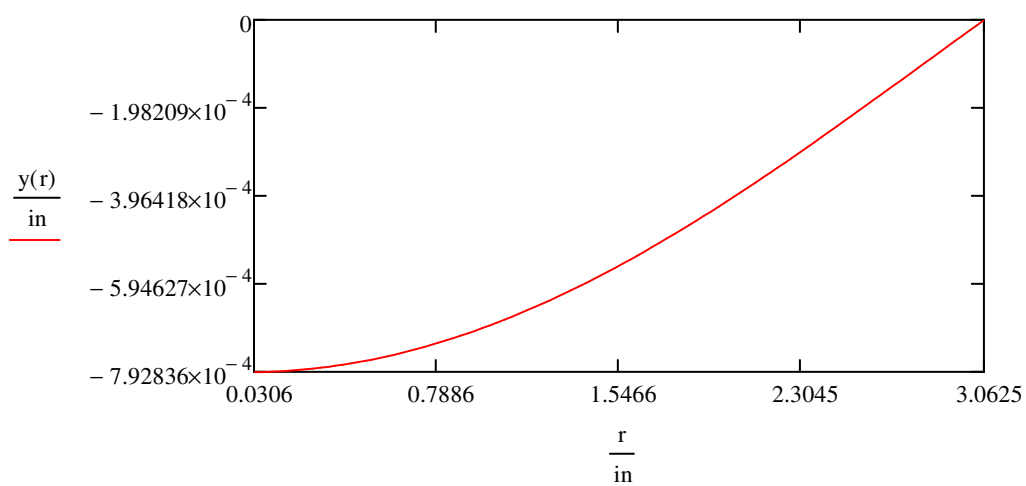

Deflections at the center and outer radius:

$y(0 \cdot in) = -7.929 \times 10^{-4}\,in$ $\qquad$ $y(a) = 0\,in$

Maximum deflection (magnitude):

$Y_{(r) \cdot \frac{100}{a}} := y(r)$ $\qquad$ $A := max(Y)$ $\qquad$ $B := min(Y)$

$y_{max} := (A > -B) \cdot A + (A \le -B) \cdot B$ $\qquad$ $y_{max} = -7.928 \times 10^{-4}\,in$

Large deflection condition check

Check to verify that the absolute value of the maximum deflection is less than one-half the plate thickness (an assumption stated in the Notation file which must hold true). If $|y_{max}|$ is greater than t/2 (large deflection), the equations in this table used for plates with small deflections are subject to large errors.

$$check := if\left(\left|y_{max}\right| > \frac{t}{2}, 0, 1\right) \qquad check = 1$$

If $|y_{max}|$ is greater than t/2 (i.e., check = 0), only max y and σ can be found. They are found using the equations on this page and the next.

If $|y_{max}|$ is not greater than t/2 (i.e., check = 1), hit **Shift-PageDown** twice to continue with the Table 24 solution of plates without large deflections.

The large deflection equations are

$$\frac{q \cdot a^4}{E \cdot t^4} = K_1 \cdot \frac{y_{large}}{t} + K_2 \cdot \left(\frac{y_{large}}{t}\right)^3$$

$$\frac{y \cdot a^2}{E \cdot t^2} = K_3 \cdot \frac{y_{large}}{t} + K_4 \cdot \left(\frac{y_{large}}{t}\right)^2$$

where

$$K_1 := \frac{1.016}{1 - \beta} \qquad K_2 := 0.376$$

$$K_3 := \frac{1.238}{1 - \beta} \qquad K_4 := 0.294$$

Make guesses for max y and σ and solve for them using the **Find** function:

$y_{large} := 0.25 \cdot in$ $\qquad$ $y := 10 \cdot psi$

Solution for y:

Given

$$\frac{q \cdot a^4}{E \cdot t^4} = K_1 \cdot \frac{y_{large}}{t} + K_2 \cdot \left(\frac{y_{large}}{t}\right)^3$$

$y_{large} := \mathrm{Find}(y_{large})$ $\qquad$ $y_{large} = 7.809 \times 10^{-4}\, in$

Solution for σ:

Given

$$\frac{y \cdot a^2}{E \cdot t^2} = K_3 \cdot \frac{y_{large}}{t} + K_4 \cdot \left(\frac{y_{large}}{t}\right)^2$$

$y := \mathrm{Find}(y)$ $\qquad$ $y = 761.766\, psi$

If your deflection was a large deflection, stop here. The remainder of the document only calculates values for plates without large deflections.

Slope

$$\Theta(r) := \frac{M_c \cdot r}{D \cdot (1 + \beta)} + LT_{\Theta}(r)$$

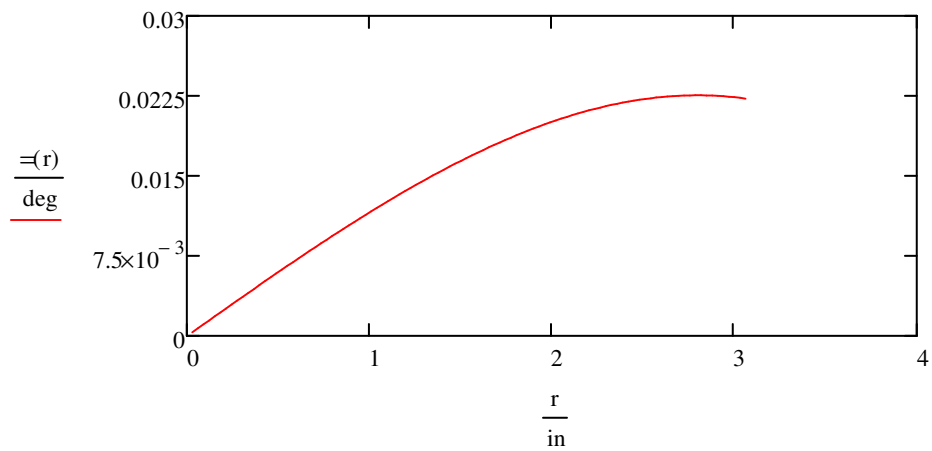

Slope at center and outer radius:

$\Theta(0 \cdot in) = 0\,deg$ $\qquad$ $\Theta(a) = 0.022\,deg$

Maximum slope (magnitude):

$S_{(r) \cdot \frac{100}{a}} := \Theta(r)$ $\qquad$ $A := \max(S)$ $\qquad$ $B := \min(S)$

$\Theta_{max} := (A > -B) \cdot A + (A \le -B) \cdot B$ $\qquad$ $\Theta_{max} = 0.023\,deg$

Moment; radial and tangential

$$M_r(r) := M_c + LT_M(r)$$

$$M_t(r) := \frac{=(r)\cdot D\cdot\left(1-\beta^2\right)}{r} + \beta\cdot M_r(r)$$

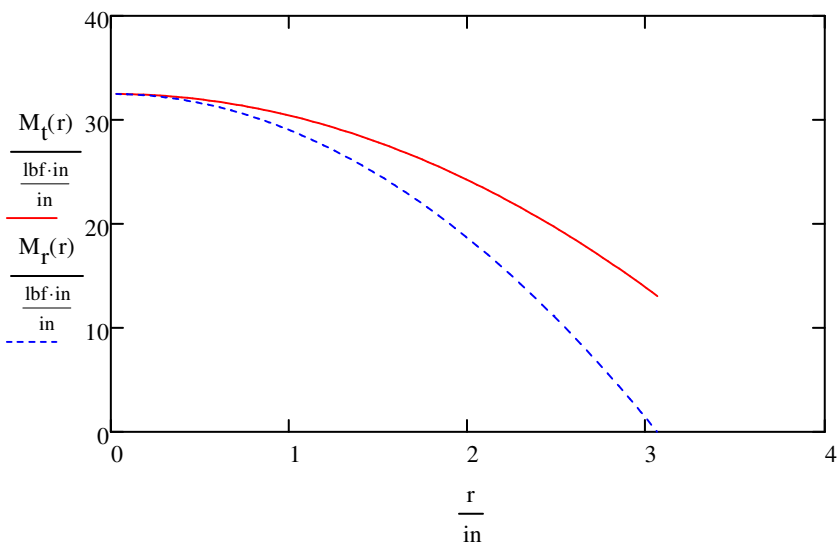

Radial and tangential moment at center and outer radius:

$M_r(0\cdot in) = 32.52\,\frac{lbf\cdot in}{in}$ $\qquad$ $M_r(a) = 0\,\frac{lbf\cdot in}{in}$

$M_t(0.01\cdot in) = 32.52\,\frac{lbf\cdot in}{in}$ $\qquad$ $M_t(a) = 13.086\,\frac{lbf\cdot in}{in}$

Maximum radial and tangential moment (magnitude):

$Mr_{(r)\cdot\frac{100}{a}} := M_r(r)$ $\qquad$ $Ar := \max(Mr)$ $\qquad$ $B := \min(Mr)$

$Mt_{(r)\cdot\frac{100}{a}} := M_t(r)$ $\qquad$ $At := \max(Mt)$ $\qquad$ $Bt := \min(Mt)$

$Mr_{max} := (Ar > -B)\cdot Ar + (Ar \le -B)\cdot B$ $\qquad$ $Mr_{max} = 32.517\,\frac{lbf\cdot in}{in}$

$Mt_{max} := (At > -Bt)\cdot At + (At \le -Bt)\cdot Bt$ $\qquad$ $Mt_{max} = 32.518\,\frac{lbf\cdot in}{in}$

Shear

$Q(r) := LT_Q(r)$

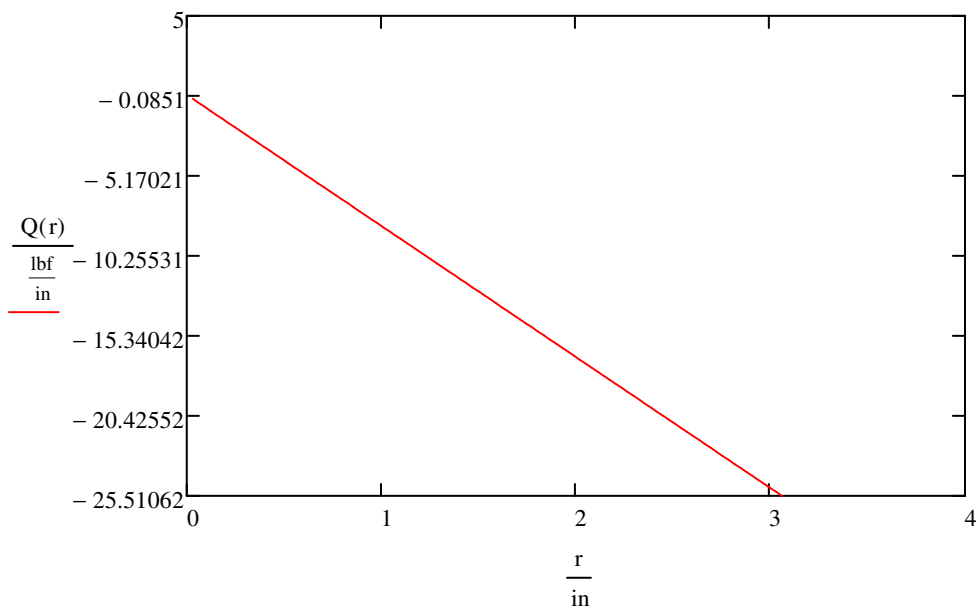

Shear at center and outer radius:

$Q(0.01 \cdot in) = -0.083 \frac{lbf}{in}$ $\qquad$ $Q(a) = -25.511 \frac{lbf}{in}$

Maximum shear (magnitude):

$V_{(r) \cdot \frac{100}{a}} := Q(r)$ $\qquad$ $A := \max(V)$ $\qquad$ $B := \min(V)$

$Q_{max} := (A > -B) \cdot A + (A \le -B) \cdot B$ $\qquad$ $Q_{max} = -25.511 \frac{lbf}{in}$

Bending stresses; radial and tangential

$$y_r(r) := \frac{6 \cdot M_r(r)}{t^2}$$

$$y_t(r) := \frac{6 \cdot M_t(r)}{t^2}$$

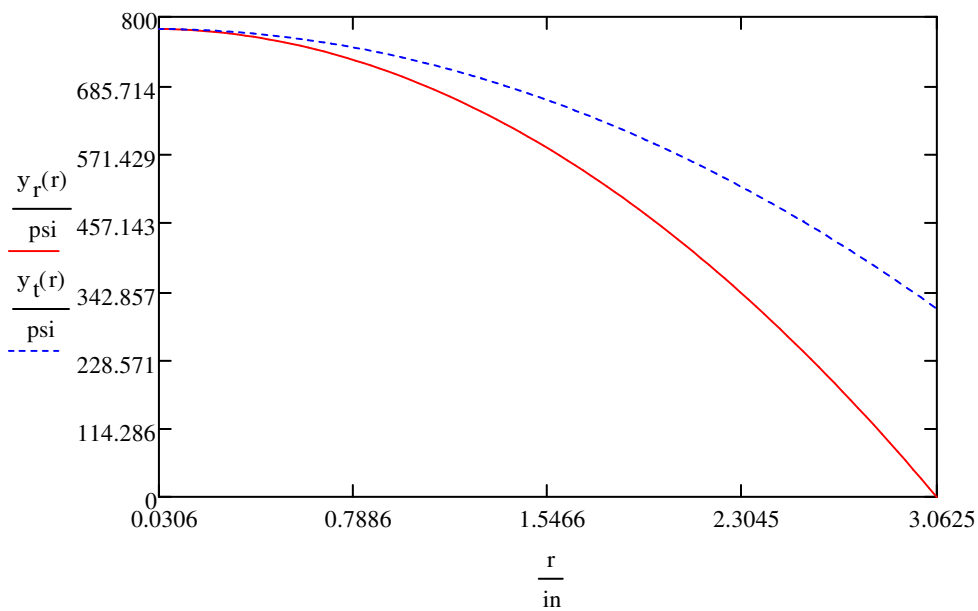

Radial and tangential stress at center and outer radius:

$y_r(0.01 \cdot in) = 780.473\ psi$ $\qquad$ $y_r(a) = 0\ psi$

$y_t(0.01 \cdot in) = 780.477\ psi$ $\qquad$ $y_t(a) = 314.068\ psi$

Maximum radial and tangential stresses:

$yr_{r \cdot \frac{100}{a}} := y_r(r)$ $\qquad$ $Ar := \max(yr)$ $\qquad$ $Br := \min(yr)$

$yt_{r \cdot \frac{100}{a}} := y_t(r)$ $\qquad$ $At := \max(yt)$ $\qquad$ $Bt := \min(yt)$

$yr_{max} := (Ar > -Br) \cdot Ar + (Ar \le -Br) \cdot Br$ $\qquad$ $yr_{max} = 780.404\ psi$

$yt_{max} := (At > -Bt) \cdot At + (At \le -Bt) \cdot Bt$ $\qquad$ $yt_{max} = 780.435\ psi$

Review the maximum values for deflection, slope, moment, stress and shear

$y_{max} = -7.928 \times 10^{-4}\,in$ $\qquad$ $=_{max} = 0.023\,deg$

$Mr_{max} = 32.517\,\frac{lbf \cdot in}{in}$ $\qquad$ $Mt_{max} = 32.518\,\frac{lbf \cdot in}{in}$

$yr_{max} = 780.404\,psi$ $\qquad$ $yt_{max} = 780.435\,psi$

$Q_{max} = -25.511\,\frac{lbf}{in}$

Total deflection of plate (bending induced plus shear induced):

$y_{ro.total} := y(0 \cdot in) + y_{sro}$ $\qquad$ $y_{ro.total} = -8.181 \times 10^{-4}\,in$

The remainder of the document displays the general plate functions and constants used in the equations above.

$$L_{11} \equiv \text{if}\left[r_o > 0, \frac{1}{64}\cdot\left[1 + 4\cdot\left(\frac{r_o}{a}\right)^2 - 5\cdot\left(\frac{r_o}{a}\right)^4 \ldots + -\left[4\cdot\left(\frac{r_o}{a}\right)^2\cdot\left[2 + \left(\frac{r_o}{a}\right)^2\right]\cdot\ln\left(\frac{a}{r_o}\right)\right]\right], \frac{1}{64}\right]$$

$$L_{17} \equiv \text{if}\left[r_o > 0, \frac{1}{4}\cdot\left[1 - \left(\frac{1-\beta}{4}\right)\cdot\left[1 - \left(\frac{r_o}{a}\right)^4\right] - \left(\frac{r_o}{a}\right)^2\cdot\left[1 + (1+\beta)\cdot\ln\left(\frac{a}{r_o}\right)\right]\right], \frac{1}{4}\cdot\left[1 - \left(\frac{1-\beta}{4}\right)\right]\right]$$

$$G_{11}(r) \equiv \text{if}\left[\left(r > r_o\right)\cdot\left(r_o > 0\right), \frac{1}{64}\cdot\left[1 + 4\cdot\left(\frac{r_o}{r}\right)^2 - 5\cdot\left(\frac{r_o}{r}\right)^4 + 4\cdot\left(\frac{r_o}{r}\right)^2\cdot\left[2 + \left(\frac{r_o}{r}\right)^2\right]\cdot\ln\left(\frac{r_o}{r}\right)\right], 0\right]$$

$$G_{14}(r) \equiv \text{if}\left[\left(r > r_o\right)\cdot\left(r_o > 0\right), \frac{1}{16}\cdot\left[1 - \left(\frac{r_o}{r}\right)^4 - 4\cdot\left(\frac{r_o}{r}\right)^2\cdot\ln\left(\frac{r_o}{r}\right)\right], 0\right]$$

$$G_{17}(r) \equiv \text{if}\left[\left(r > r_o\right)\cdot(r > 0), \frac{1}{4}\cdot\left[1 - \left(\frac{1-\beta}{4}\right)\cdot\left[1 - \left(\frac{r_o}{r}\right)^4\right] - \left(\frac{r_o}{r}\right)^2\cdot\left[1 + (1+\beta)\cdot\ln\left(\frac{r}{r_o}\right)\right]\right], 0\right]$$

$$LT_y(r) \equiv \frac{-q\cdot r^4}{D}\cdot G_{11}(r) \qquad LT_M(r) \equiv -q\cdot r^2\cdot G_{17}(r)$$

$$LT_{\underline{\ }}(r) \equiv \frac{-q\cdot r^3}{D}\cdot G_{14}(r) \qquad LT_Q(r) \equiv \text{if}\left[r > r_o, \frac{-q}{2\cdot r}\cdot\left(r^2 - r_o^2\right), 0\right]$$

NOTE --- this ends the section that was extracted from the MathSoft electronic book of Roark equations.

Margins of Safety for the Vacuum Case Feed-thru Port Covers

The maximum stress is the largest of the radial and tangential stresses:

$$ymax := max(yr_{max}, yt_{max})$$

The margins of safety are calculated as follows for ultimate (MSu) and yield (MSy):

$$MSu := \left(\frac{MAu}{FSu \cdot ymax}\right) - 1 \qquad MSu = 25.908$$

$$MSy := \left(\frac{MAy}{FSy \cdot ymax}\right) - 1 \qquad MSy = 34.877$$

3.10 Vacuum Case Bolted Interfaces

Vacuum Case Bolted Interfaces

The Vacuum Case Bolt Analysis is performed in the following report sections.

3.10.1	Upper Support Ring to Conical Flange
3.10.1	Upper Support Ring to Conical Flange Fail-Safe
3.10.2	Lower Support Ring to Conical Flange
3.10.2	Lower Support Ring to Conical Flange Fail-Safe
3.10.3	Upper Support Ring to Outer Cylinder
3.10.3	Upper Support Ring to Outer Cylinder Fail-Safe
3.10.4	Lower Support Ring to Outer Cylinder Bolted Interface
3.10.4.1	Lower Support Ring to Outer Cylinder
3.10.4.1	Lower Support Ring to Outer Cylinder Fail-Safe
3.10.4.2	Lower Support Ring to Outer Cylinder - .3125"
3.10.4.2	Lower Support Ring to Outer Cylinder Fail-Safe - .3125"
3.10.5	Clevis Plate to Upper Support Ring
3.10.5	Clevis Plate to Upper Support Ring Fail-Safe
3.10.6	Upper Interface Plate to Vacuum Case
3.10.6	Upper Interface Plate to Vacuum Case Fail-Safe
3.10.6	Upper Interface Plate to Vacuum Case Fail-Safe (Shear Pin Failure)
3.10.7	Lower Interface Plate to Vacuum Case Bolted Interface
3.10.7.1	Lower Interface Plate to Vacuum Case - .375"
3.10.7.1	Lower Interface Plate to Vacuum Case Fail-Safe - .375"
3.10.7.1	Lower Interface Plate to Vacuum Case Fail-Safe - .375" (Shear Pin Failure)
3.10.7.2	Lower Interface Plate to Vacuum Case - .500"
3.10.7.2	Lower Interface Plate to Vacuum Case Fail-Safe - .500"
3.10.7.2	Lower Interface Plate to Vacuum Case Fail-Safe - .500" (Shear Pin Failure)

3.10.1 Upper Support Ring to Conical Flange

Upper Support Ring to Conical Flange Bolt Analysis

In the Vacuum Case Assembly, the Upper Conical Flange is installed on the Upper Support Ring. A total of 232 fasteners are used to attach the Upper Conical Flange to the Upper Support Ring. The fasteners are EWB0420-4H-9 (200 ksi), 0.25-28 UNJF. The drawing number illustrating the Upper Conical Flange to the Upper Support Ring is SEG39135776.

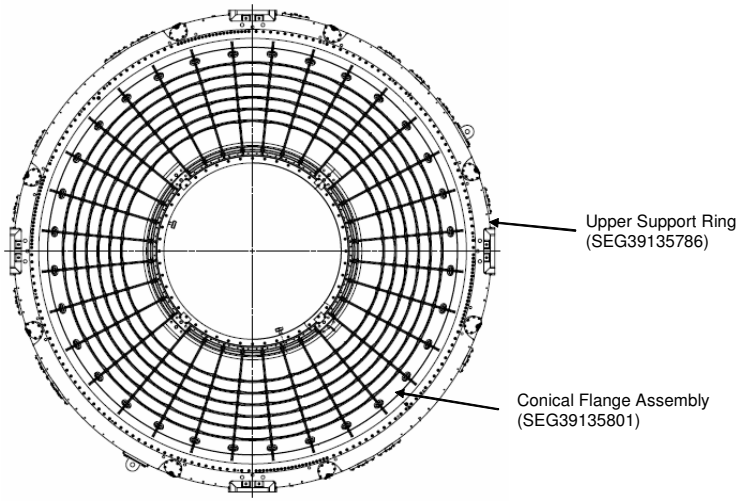

Top View of Vacuum Case Assembly

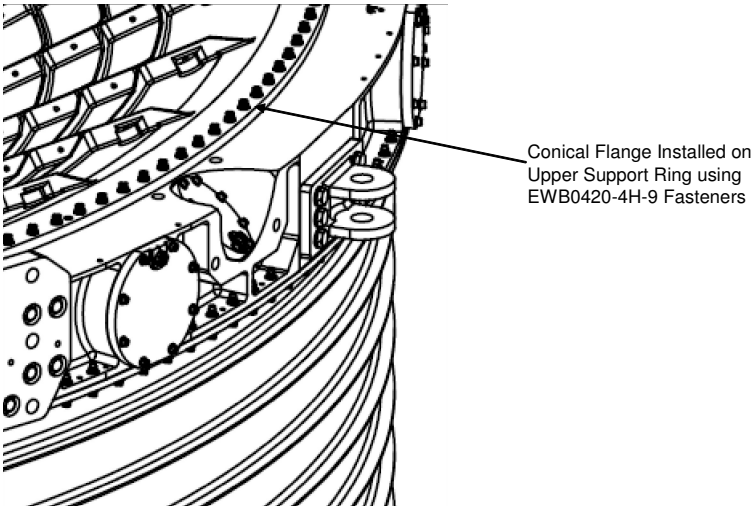

Side View of Vacuum Case Assembly

Loads model 2-05 was used to retrieve loads at the bolted interfaces. The CBUSH elements were post processed in NASPOST for forces and moments. The CBUSH element identification numbers are 920001-920232. A total of 64 load cases are included in the NASPOST run. Note that this bolted interface was checked for minimum margins of safety for launch, nominal landing, and abort landing load cases. The abort landing case combined with abort landing temperature data resulted in the lowest minimum margins of safety. Therefore, the abort landing case is used in this analysis.

CHECK BOLTS (EWB 0420-4H-9 bolts 0.250-28UNJF-3A, Material-A-286), Insert MS51830CA-202L, Washer NAS1587-4C

Reading database file for bolted interface, abort landing case

Note that ".dat" is generated from NASPOST result (.LIS file) by just removing all words and comments.

$data := READPRN("uppervc_abort.dat")$

$s := 1..rows(data)$

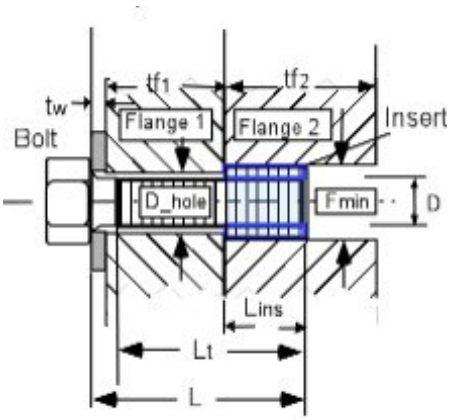

Flange 1: Conical Flange
Part number: SEG39135801-301
Material: 2219-T62, SAE AMS-QQ-A 250/30

Flange 2: Upper Support Ring
Part number: SEG39135786-301
Material: 7050-T7451, AMS 4108

Loads

Applied tensile load $P_s := (data_{s,3}) \cdot lbf$ $ID_s := data_{s,1}$

Applied shear load $V_s := (data_{s,4}) \cdot lbf$ $LC_s := data_{s,2}$

Applied bending moment $M_s := (data_{s,5}) \cdot in \cdot lbf$

Factors of Safety

Ultimate $SFu := 1.4$ Yield $SFy := 1.1$

Joint Separation $SFsep := 1.2$ Fitting factor $FF := 1.15$

Temperature data (Ref Appendix C2), Abort Landing Case

Assembly $Temp_initial := 70 \cdot deg$

Maximum $Temp_max := 150 \cdot deg$

Minimum $Temp_min := 40 \cdot deg$

Bolt and Insert Data

Nominal diameter of bolt $D := 0.250 \cdot in$ Number of threads/inch $Nt := 28 \cdot \frac{1}{in}$

Total length of bolt $L := 1.050 \cdot in$ Length of insert $Lins := 0.375 \cdot in$

Threaded length $Lt := 0.487 \cdot in$ Min. external diameter of insert $Fmin := 0.312 \cdot in$

(If bolt is fully threaded, input Lt = L) Depth of recess for insert $lr := 0.02 \cdot in$

This file uses the calculations shown in \\escfil02\2i11_mathcad\8307_bolts\thread_data.mcd

Washer Data

Thickness of washer $tw := 0.078 \cdot in$

Outer Diameter of washer $Dw := .531in$

Inner Diameter of washer $Dwi := 0.252 \cdot in$

Bolt head dia. across flats $dw := 0.433 \cdot in$ (used only if there is no washer)

Note: If there is no washer, tw, Dw, and Dwi should be zero.

Flange data

Thickness of flange 1 $tf1 := .510 \cdot in$

Thickness of flange 2 $tf2 := .375in$ (Length of insert)

Diameter of hole $D_hole := 0.296 \cdot in$

Material Property Data

Bolt

Temperature correction factor for bolt strength ultimate (Ref. MIL-HDBK-5J, fig. 6.2.1.1.1) $TSu_bolt := .97$ yield $TSy_bolt := .97$

Bolt ultimate tensile allowable stress $Ftu_bolt := 200000 \cdot psi$ (EWB 0420)

Bolt ultimate shear allowable stress $Fsu_bolt := 0.6 \cdot Ftu_bolt$

Bolt yield tensile allowable $Fty_bolt := 180000 \cdot psi$ (AMS 5726C)

Temperature correction factor for bolt modulus $TE_bolt := .98$ (Ref. MIL-HDBK-5J, fig. 6.2.1.1.4(a))

Modulus of elasticity of bolt $E_bolt := \left(29.1 \cdot 10^{6} \cdot psi\right)$ (Ref. MIL-HDBK-5J, table 6.2.1.0(b))

Thermal coefficient for bolt: $\beta_bolt_hot := 9.1 \cdot 10^{-6} \cdot \frac{\frac{in}{in}}{deg}$ $\beta_bolt_cold := 8.9 \cdot 10^{-6} \cdot \frac{\frac{in}{in}}{deg}$

(Ref. MIL-HDBK-5J, fig. 6.2.1.0)

Insert

Temperature correction factor for insert strength $TS_ins := .97$ (Ref. MIL-HDBK-5J, fig. 6.2.1.1.1)

Ultimate tensile allowable stress $Ftu_ins := 140000 \cdot psi$ (Ref. MS51830)

Ultimate shear allowable stress $Fsu_ins := 0.6 \cdot Ftu_ins$

Washer

Temperature correction factor for washer modulus $TE_washer := .97$ (Ref. MIL-HDBK-5J, fig. 6.2.1.1.1)

Modulus of elasticity of washer $E_washer := \left(29.1 \cdot 10^{6} \cdot psi\right)$ (Ref. MIL-HDBK-5J, table 6.2.1.0(b))

Flanges

Stiffness of the joint depends upon number of members in the grip of the fasteners,
Modulus of elasticity of these members, and diameters of the bolt and the washer.

Temperature correction factor for flange 1 $Tf1E := .98$ (modulus) (Ref. MIL-HDBK-5J, fig. 3.2.8.1.1(a))

Temperature correction factor for flange 2 $Tf2E := .97$ (modulus) (Ref. MIL-HDBK-5J, fig. 3.7.6.1.4 and Appendix C9)

$Tf2s := .98$ (strength) (Ref. MIL-HDBK-5J, fig. 3.7.4.2.1)

Shear strength allowable for flanges $Fsu_f2 := 42000 \cdot psi$ (Ref. MIL-HDBK-5J, table 3.7.4.0(d))

Modulus of elasticity for the parts in the joint $E_flange1 := \left(10.5 \cdot 10^{6} \cdot psi\right)$ (Ref. MIL-HDBK-5J, table 3.2.8.0(b_1))

$E_flange2 := \left(10.2 \cdot 10^{6} \cdot psi\right)$ (Ref. MIL-HDBK-5J, table 3.7.4.0(d))

Coefficient of thermal expansion for flanges $\beta_flange1_hot := 12.45 \cdot 10^{-6} \cdot \frac{\frac{in}{in}}{deg}$ (Ref. MIL-HDBK-5J, fig. 3.2.8.0)

$\beta_flange1_cold := 11.8 \cdot 10^{-6} \cdot \frac{\frac{in}{in}}{deg}$

$\beta_flange2_hot := 12.8 \cdot 10^{-6} \cdot \frac{\frac{in}{in}}{deg}$ (Ref. MIL-HDBK-5J, table 3.7.4.0(d) and Appendix C9)

$\beta_flange2_cold := 12.1 \cdot 10^{-6} \cdot \frac{\frac{in}{in}}{deg}$

Torque/Preload data

Maximum torque (65% of yield) $Tmax := 160 \cdot in \cdot lbf$

Minimum torque (95% of max. torque) $Tmin := 152 \cdot in \cdot lbf$

Torque coefficient: $k := 0.15$

Loading plane factor: $n := .5$

Preload Uncertainty: $u := 0.25$

This file uses the calculations shown in \\escfil02\2i11_mathcad\8307_bolts\multi_bolt_stiffness_insert_Rev

Insert Stiffness File

Prepared By	Name	Date		File Name
	G. Reyes	03/13/06		USR_CF_r3.mcd
Checked By	C. Bala		**Engineering and Science Contract Group** *Structural Analysis Section*	Draw ing No. SEG39135776
Title	Bolts from Upper Support Ring to Conical Flange			

Bolt Load data

Bolt/joint stiffness factor	$= 0.272$	Preload due to temperature	$Pthr_pos = 291.4\,lbf$
Max. preload	$PLDmax = 5624.8\,lbf$		$Pthr_neg = -94.6\,lbf$
Min. preload	$PLDmin = 2678.8\,lbf$	Uncertainty factor	$u = 0.25$
Joint separation load	$max(Psep) = 591.6\,lbf$	Torque coefficient	$k = 0.15$
Max. load on the bolt(ultimate)	$max(Pb) = 5732.8\,lbf$	Loading plane factor	$n = 0.5$
Max. load on the bolt(yield)	$max(Pby) = 5709.7\,lbf$	Thread shear pullout load of bolt or insert	$Pths = 12830.3\,lbf$
Bolt ultimate tensile strength	$PAt = 6844.9\,lbf$	Thread shear pullout load in parent metal	$Ppths = 7564.5\,lbf$

Length_check = "Bolt length is sufficient"

Summary of Margins for bolt:

Joint separation	$MS_min_{1,1} = 3.558$	Direct Thread shear Ultimate	$MS_min_{6,1} = 8.530$
Direct Tension Ultimate	$MS_min_{2,1} = 7.624$	Total Thread shear Ultimate	$MS_min_{7,1} = 0.320$
Direct Tension Yield	$MS_min_{3,1} = 8.878$	Shear Ultimate	$MS_min_{8,1} = 2.56$
Total Tension Ultimate	$MS_min_{4,1} = 0.194$	Bending Ultimate	$MS_min_{9,1} = 10$
Total Tension Yield	$MS_min_{5,1} = 0.079$	Combined shear, tension and bending ultimate	$MS_min_{10,1} = 0.177$

Determination of the smallest margin of safety for the bolt, and the failure mode:

$MSbolt := min(MS)$

$MSbolt = 0.079$ Failure_Mode = "Total Tension Yield"

$MS_min_ID = 920027$	Element Identification and Bolt Number (920027) for Minimum Margin
$MS_min_LC = 2003$	Load Case Number for Minimum Margin
$MS_min_P = 493$	Applied Tensile Load for Minimum Margin
$MS_min_V = 540$	Applied Shear Load for Minimum Margin
$MS_min_M = 0$	Applied Bending Moment for Minimum Margin

Bolt Fail-Safe Analysis for Upper Support Ring to Conical Flange Bolts

It will be assumed that one bolt will fail. Bolt number 920027 has been removed and only load case 2003 is included in the following fail-safe analysis. There are now 231, EWB0420-4H-9 (200 ksi), 0.25-28 UNJF fasteners, holding the Upper Conical Flange to the Upper Support Ring. The drawing number illustrating the Upper Conical Flange to the Upper Support Ring is SEG39135776.

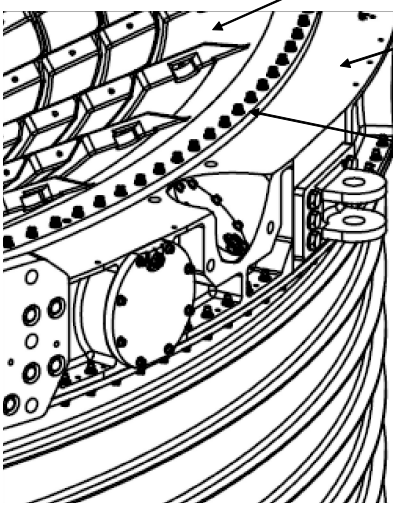

Side View of Vacuum Case Assembly

Reading database file for bolted interface, abort landing case

Note that ".txt" is generated from NASPOST result (.LIS file) by just removing all words and comments.

$data_fs := READPRN("usr_cf_fs.txt")$

$s := 1 .. rows(data_fs)$

Fail-safe Loads - loads model 2-05
Load Case 2003

Applied tensile load $P_FS_s := data_fs_{s,3} \cdot lbf$ $ID_FS_s := data_fs_{s,1}$

Applied shear load $V_FS_s := data_fs_{s,4} \cdot lbf$ $LC_FS_s := data_fs_{s,2}$

Applied bending moment $M_FS_s := data_fs_{s,5} \cdot in \cdot lbf$

Fail-safe Factors of Safety

Ultimate $SFu_FS := 1.0$

Joint Separation $SFsep_FS := 1.0$

This file uses the calculations shown in \\escfil02\2i11_mathcad\8307_bolts\ multi_bolt_stiffness_insert_FS_RevC

Bolt Fail-safe Load data

Joint separation load $\max(Psep_FS) = 715.451\ lbf$

Max. load on the bolt(ultimate) $\max(Pb_FS) = 5736.8\ lbf$

Summary of fail-safe Margins for bolt:

Joint separation	$MS_minFS_{1,1} = 2.769$	Total Thread shear Ultimate	$MS_minFS_{5,1} = 0.319$
Direct Tension Ultimate	$MS_minFS_{2,1} = 7.319$	Shear Ultimate	$MS_minFS_{6,1} = 4.13$
Total Tension Ultimate	$MS_minFS_{3,1} = 0.193$	Bending Ultimate	$MS_minFS_{7,1} = 10$
Direct Thread shear Ultimate	$MS_minFS_{4,1} = 8.19$	Combined shear, tension and bending ultimate	$MS_minFS_{8,1} = 0.1858$

Determination of the smallest fail-safe margin of safety for the bolt, and the failure mode:

$MSbolt_FS := \min(MS_FS)$

$MSbolt_FS = 0.186$ Failure_Mode_FS = "Combined Shear Tension Bending Ultimate"

$MS_min_ID = 920026$	Element Identification and Bolt Number (920026) for Minimum Margin
$MS_min_LC = 2003$	Load Case Number for Minimum Margin
$MS_min_P = 715.5$	Applied Tensile Load for Minimum Margin
$MS_min_V = 642.4$	Applied Shear Load for Minimum Margin
$MS_min_M = 0$	Applied Bending Moment for Minimum Margin

3.10.2 Lower Support Ring to Conical Flange

Lower Support Ring to Conical Flange Bolt Analysis

In the Vacuum Case Assembly, the Lower Conical Flange is installed on the Lower Support Ring. A total of 192 fasteners are used to attach the Lower Conical Flange to the Lower Support Ring. The fasteners are EWB0420-4H-9 (200 ksi), 0.25-28 UNJF. The drawing number illustrating the Lower Conical Flange to the Lower Support Ring is SEG39135776.

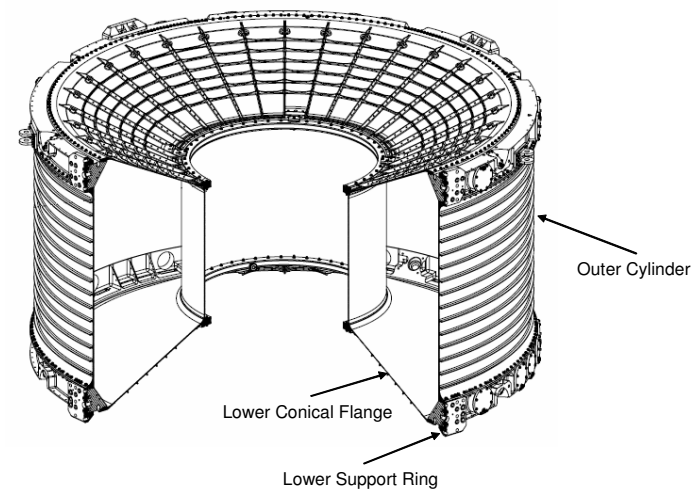

Section View of Vacuum Case Assembly

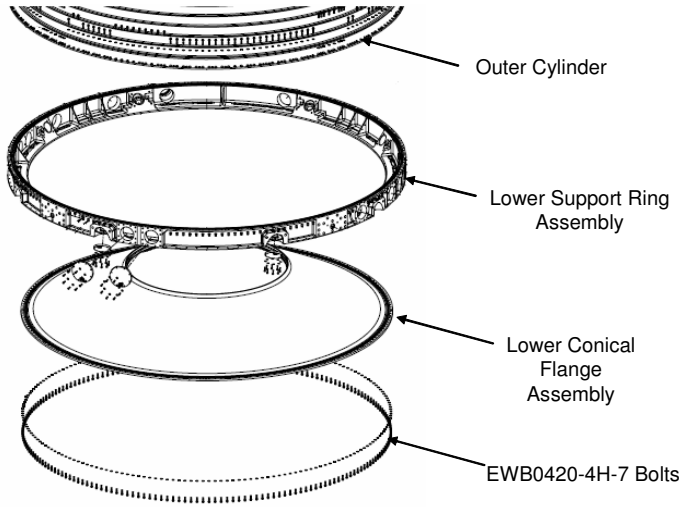

Exploded View of Vacuum Case Assembly (Lower Section Shown Only)

Loads model 2-05 was used to retrieve loads at the bolted interfaces. The CBUSH elements were post processed in NASPOST for forces and moments. The CBUSH element identification numbers are 940001-940192. A total of 64 load cases are included in the NASPOST run. Note that this bolted interface was checked for minimum margins of safety for launch, nominal landing, and abort landing load cases. The abort landing case combined with abort landing temperature data resulted in the lowest minimum margins of safety. Therefore, the abort landing case is used in this analysis.

CHECK BOLTS (EWB 0420-4H-9 bolts 0.250-28UNJF-3A, Material-A-286), Insert MS51830CA-202L, Washer NAS1587-4C

Reading database file for bolted interface, abort landing case

Note that ".dat" is generated from NASPOST result (.LIS file) by just removing all words and comments.

$data := READPRN("lowervc_abort.dat")$

$s := 1 .. rows(data)$

Flange 1: Conical Flange
Part number:SEG39135780-301
Material: 2219-T62

Flange 2: Lower Support Ring
Part number: SEG39135787-301
Material: 7050-T7451, AMS 4108

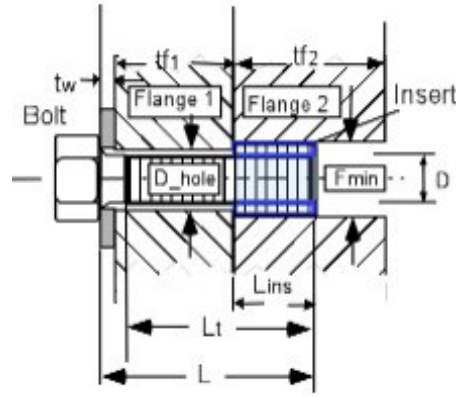

Loads

Applied tensile load $P_s := (data_{s,3}) \cdot lbf$ $ID_s := data_{s,1}$

Applied shear load $V_s := (data_{s,4}) \cdot lbf$ $LC_s := data_{s,2}$

Applied bending moment $M_s := (data_{s,5}) \cdot in \cdot lbf$

Factors of Safety

Ultimate $SFu := 1.4$ Yield $SFy := 1.1$

Joint Separation $SFsep := 1.2$ Fitting factor $FF := 1.15$

Temperature data (Ref Appendix C2), Abort Landing Case

Assembly $Temp_initial := 70 \cdot deg$

Maximum $Temp_max := 150 \cdot deg$

Minimum $Temp_min := 40 \cdot deg$

Bolt and Insert Data

Nominal diameter of bolt $D := 0.250 \cdot in$

Number of threads/inch $Nt := 28 \cdot \frac{1}{in}$

Total length of bolt $L := 1.050 \cdot in$

Length of insert $Lins := 0.375 \cdot in$

Threaded length $Lt := 0.487 \cdot in$

Min. external diameter of insert $Fmin := 0.312 \cdot in$

(If bolt is fully threaded, input Lt = L)

Depth of recess for insert $lr := 0.02 \cdot in$

This file uses the calculations shown in \\escfil02\2i11_mathcad\8307_bolts\thread_data.mcd

Washer Data

Thickness of washer $tw := 0.078 \cdot in$

Outer Diameter of washer $Dw := .531in$

Inner Diameter of washer $Dwi := 0.252 \cdot in$

Bolt head dia. across flats $dw := 0.433 \cdot in$ (used only if there is no washer)

Note: If there is no washer, tw, Dw, and Dwi should be zero.

Flange data

Thickness of flange 1 $tf1 := .510 \cdot in$

Thickness of flange 2 $tf2 := .375in$

Diameter of hole $D_hole := 0.296 \cdot in$

Material Property Data

Bolt

Temperature correction factor for bolt strength ultimate $TSu_bolt := .97$ yield $TSy_bolt := .97$

(Ref. MIL-HDBK-5J, fig. 6.2.1.1.1)

Bolt ultimate tensile allowable stress $Ftu_bolt := 200000 \cdot psi$ (EWB 0420)

Bolt ultimate shear allowable stress $Fsu_bolt := 0.6 \cdot Ftu_bolt$

Bolt yield tensile allowable $Fty_bolt := 180000 \cdot psi$ (AMS 5726C)

Temperature correction factor for bolt modulus $TE_bolt := .98$ (Ref. MIL-HDBK-5J, fig. 6.2.1.1.4(a))

Modulus of elasticity of bolt $E_bolt := \left(29.1 \cdot 10^{6} \cdot psi\right)$ (Ref. MIL-HDBK-5J, table 6.2.1.0(b))

Thermal coefficient for bolt: $\beta_bolt_hot := 9.1 \cdot 10^{-6} \cdot \frac{\frac{in}{in}}{deg}$ $\beta_bolt_cold := 8.9 \cdot 10^{-6} \cdot \frac{\frac{in}{in}}{deg}$

(Ref. MIL-HDBK-5J, fig. 6.2.1.0)

Insert

Temperature correction factor for insert strength $TS_ins := .97$ (Ref. MIL-HDBK-5J, fig. 6.2.1.1.1)

Ultimate tensile allowable stress $Ftu_ins := 140000 \cdot psi$ (Ref. MS51830)

Ultimate shear allowable stress $Fsu_ins := 0.6 \cdot Ftu_ins$

Washer

Temperature correction factor for washer modulus $TE_washer := .97$ (Ref. MIL-HDBK-5J, fig. 6.2.1.1.1)

Modulus of elasticity of washer $E_washer := \left(29.1 \cdot 10^{6} \cdot psi\right)$ (Ref. MIL-HDBK-5J, table 6.2.1.0(b))

Flanges

Stiffness of the joint depends upon number of members in the grip of the fasteners,
Modulus of elasticity of these members, and diameters of the bolt and the washer.

Temperature correction factor for flange 1 $Tf1E := .98$ (modulus) (Ref. MIL-HDBK-5J, fig. 3.2.8.1.1(a))

Temperature correction factor for flange 2 $Tf2E := .97$ (modulus) (Ref. MIL-HDBK-5J, fig. 3.7.6.1.4 and Appendix C9)

$Tf2s := .98$ (strength) (Ref. MIL-HDBK-5J, fig. 3.7.4.2.1)

Shear strength allowable for flanges $Fsu_f2 := 42000 \cdot psi$ (Ref. MIL-HDBK-5J, table 3.7.4.0(d))

Modulus of elasticity for the parts in the joint $E_flange1 := \left(10.5 \cdot 10^{6} \cdot psi\right)$ (Ref. MIL-HDBK-5J, table 3.2.8.0(b_1))

$E_flange2 := \left(10.2 \cdot 10^{6} \cdot psi\right)$ (Ref. MIL-HDBK-5J, table 3.7.4.0(d))

Coefficient of thermal expansion for flanges $\beta_flange1_hot := 12.45 \cdot 10^{-6} \cdot \frac{\frac{in}{in}}{deg}$ (Ref. MIL-HDBK-5J, table 3.2.8.0)

$\beta_flange1_cold := 11.8 \cdot 10^{-6} \cdot \frac{\frac{in}{in}}{deg}$

$\beta_flange2_hot := 12.8 \cdot 10^{-6} \cdot \frac{\frac{in}{in}}{deg}$ (Ref. MIL-HDBK-5J, table 3.7.4.0(d) and Appendix C9)

$\beta_flange2_cold := 12.1 \cdot 10^{-6} \cdot \frac{\frac{in}{in}}{deg}$

Torque/Preload data

Maximum torque (65% of yield) $Tmax := 160 \cdot in \cdot lbf$

Minimum torque (95% of max. torque) $Tmin := 152 \cdot in \cdot lbf$

Torque coefficient: $k := 0.15$

Loading plane factor: $n := .5$

Preload Uncertainty: $u := 0.25$

This file uses the calculations shown in \\escfil02\2i11_mathcad\8307_bolts\multi_bolt_stiffness_insert_RevC

Insert Stiffness File

Bolt Load data

Bolt/joint stiffness factor $= 0.272$

Max. preload $PLDmax = 5624.8\,lbf$

Min. preload $PLDmin = 2678.8\,lbf$

Joint separation load $max(Psep) = 672\,lbf$

Max. load on the bolt(ultimate) $max(Pb) = 5747.5\,lbf$

Max. load on the bolt(yield) $max(Pby) = 5721.2\,lbf$

Bolt ultimate tensile strength $PAt = 6844.9\,lbf$

Preload due to temperature $Pthr_pos = 291.4\,lbf$

$Pthr_neg = -94.6\,lbf$

Uncertainty factor $u = 0.25$

Torque coefficient $k = 0.15$

Loading plane factor $n = 0.5$

Thread shear pullout load of bolt or insert $Pths = 12830.3\,lbf$

Thread shear pullout load in parent metal $Ppths = 7564.5\,lbf$

Length_check = "Bolt length is sufficient"

Summary of Margins for bolt:

Joint separation	$MS_min_{1,1} = 3.012$	Direct Thread shear Ultimate	$MS_min_{6,1} = 7.390$
Direct Tension Ultimate	$MS_min_{2,1} = 6.592$	Total Thread shear Ultimate	$MS_min_{7,1} = 0.316$
Direct Tension Yield	$MS_min_{3,1} = 7.696$	Shear Ultimate	$MS_min_{8,1} = 1.63$
Total Tension Ultimate	$MS_min_{4,1} = 0.191$	Bending Ultimate	$MS_min_{9,1} = 10$
Total Tension Yield	$MS_min_{5,1} = 0.077$	Combined shear, tension and bending ultimate	$MS_min_{10,1} = 0.142$

Determination of the smallest margin of safety for the bolt, and the failure mode:

$MSbolt := min(MS)$

$MSbolt = 0.077$ Failure_Mode = "Total Tension Yield"

$MS_min_ID = 940071$	Element Identification and Bolt Number (940071) for Minimum Margin
$MS_min_LC = 2027$	Load Case Number for Minimum Margin
$MS_min_P = 560$	Applied Tensile Load for Minimum Margin
$MS_min_V = 815$	Applied Shear Load for Minimum Margin
$MS_min_M = 0$	Applied Bending Moment for Minimum Margin

Bolt Fail-Safe Analysis for Lower Support Ring to Conical Flange Bolts

It will be assumed that one bolt will fail. Bolt number 940071 has been removed and only load case 2027 is included in the following fail-safe analysis. There are now 191, EWB0420-4H-9 (200 ksi), 0.25-28 UNJF fasteners, holding the Lower Conical Flange to the Lower Support Ring. The drawing number illustrating the Lower Conical Flange to the Lower Support Ring is SEG39135776.

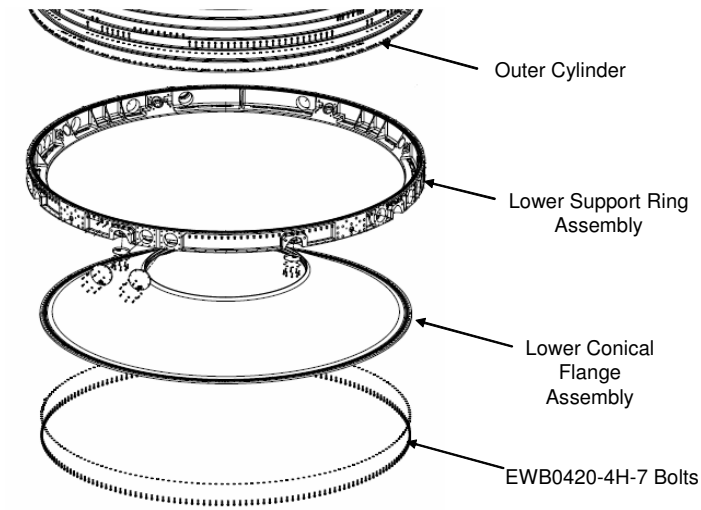

Exploded View of Vacuum Case Assembly (Lower Section Shown Only)

Reading database file for bolted interface, abort landing case

Note that ".txt" is generated from NASPOST result (.LIS file) by just removing all words and comments.

$data_fs := READPRN("lsr_cf_fs.txt")$

$s := 1 .. rows(data_fs)$

Fail-safe Loads from Loads Model 2-05
Load Case 2027

Applied tensile load $P_FS_s := data_fs_{s,3} \cdot lbf$ $ID_FS_s := data_fs_{s,1}$

Applied shear load $V_FS_s := data_fs_{s,4} \cdot lbf$ $LC_FS_s := data_fs_{s,2}$

Applied bending moment $M_FS_s := data_fs_{s,5} \cdot in \cdot lbf$

Fail-safe Factors of Safety

Ultimate $SFu_FS := 1.0$

Joint Separation $SFsep_FS := 1.0$

This file uses the calculations shown in \\escfil02\2i11_mathcad\8307_bolts\ multi_bolt_stiffness_insert_FS_RevC

Fail-Safe Stiffness File

Bolt Fail-safe Load data

Joint separation load $\max(Psep_FS) = 799.317\ lbf$

Max. load on the bolt(ultimate) $\max(Pb_FS) = 5749.9\ lbf$

Summary of fail-safe Margins for bolt:

Joint separation	$MS_minFS_{1,1} = 2.373$	Total Thread shear Ultimate	$MS_minFS_{5,1} = 0.316$
Direct Tension Ultimate	$MS_minFS_{2,1} = 6.446$	Shear Ultimate	$MS_minFS_{6,1} = 2.42$
Total Tension Ultimate	$MS_minFS_{3,1} = 0.19$	Bending Ultimate	$MS_minFS_{7,1} = 10$
Direct Thread shear Ultimate	$MS_minFS_{4,1} = 7.23$	Combined shear, tension and bending ultimate	$MS_minFS_{8,1} = 0.1692$

Determination of the smallest fail-safe margin of safety for the bolt, and the failure mode:

$MSbolt_FS := \min(MS_FS)$

$MSbolt_FS = 0.169$ Failure_Mode_FS = "Combined Shear Tension Bending Ultimate"

$MS_min_ID = 940072$	Element Identification and Bolt Number (940072) for Minimum Margin
$MS_min_LC = 2027$	Load Case Number for Minimum Margin
$MS_min_P = 724$	Applied Tensile Load for Minimum Margin
$MS_min_V = 958.2$	Applied Shear Load for Minimum Margin
$MS_min_M = 0$	Applied Bending Moment for Minimum Margin

3.10.3 Upper Support Ring to Outer Cylinder

Upper Support Ring to Outer Cylinder Bolt Analysis

In the Vacuum Case Assembly, the Upper Support Ring is installed on the Outer Cylinder. Two separate sets of fasteners are used to attach the Upper Support Ring to the Outer Cylinder. The fasteners are EWB0420-4H-7 (200 ksi), 0.25-28 UNJF and EWB 0420-4H-13 (200 ksi), 0.25-28 UNJF . A total of 192 fasteners are used to attach the Upper Support Ring to the Outer Cylinder. Both sets of fasteners will be analyzed separately. The drawing number illustrating the Upper Support Ring to the Outer Cylinder is SEG39135776.

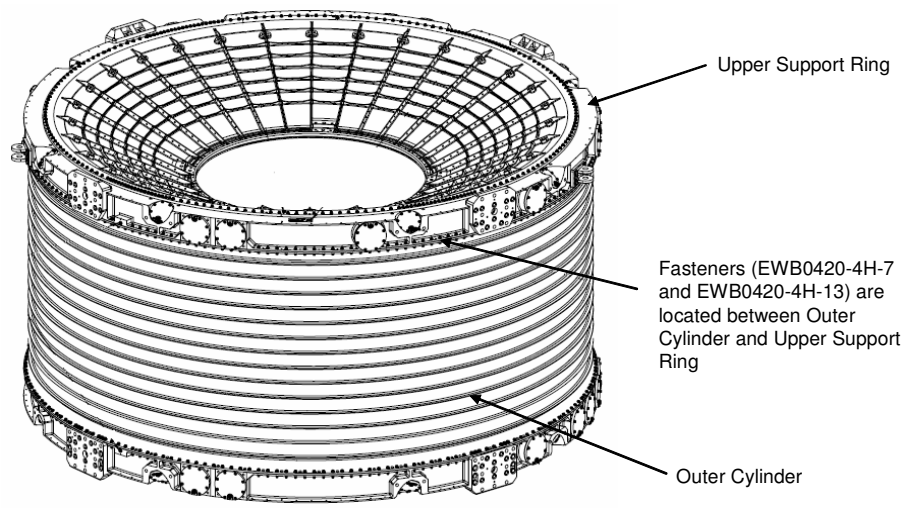

Figure of Vacuum Case Assembly

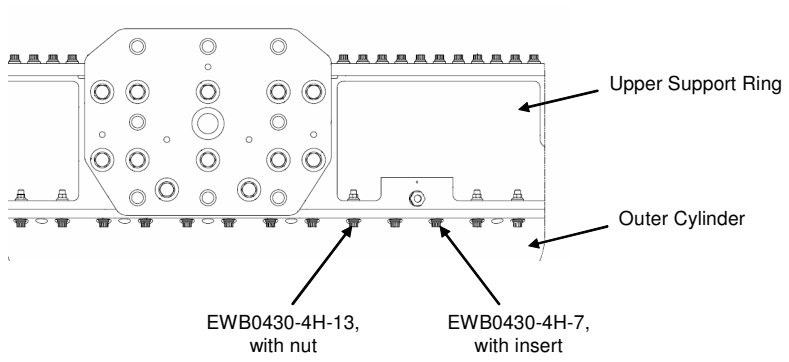

Close View of Vacuum Case Assembly (Location of fasteners is shown)

Loads model 2-05 was used to retrieve loads at the bolted interfaces. The CBUSH elements were post processed in NASPOST for forces and moments. The CBUSH element identification numbers are 940001-940192. The following table shows the CBUSH element identification numbers corresponding to the appropriate fasteners. A total of 64 load cases are included in the NASPOST run for the EWB0420-4H-13 fasteners and a total of 20 load cases are included in the NASPOST run for the EWB0420-4H-7 fasteners. Note that this bolted interface was checked for minimum margins of safety for launch, nominal landing, and abort landing load cases. The abort landing case combined with abort landing temperature data resulted in the lowest minimum margins of safety. Therefore, the abort landing case is used in this analysis.

CBUSH Element ID's for EWB0420-4H-7	CBUSH Element ID's for EWB0420-4H-13
940009 THRU 940011	940001 THRU 940008
940022 THRU 940027	940012 THRU 940021
940030 THRU 940032	940028 THRU 940029
940038 THRU 940042	940033 THRU 940037
940048 THRU 940050	940043 THRU 940047
940053 THRU 940055	940051 THRU 940052
940066 THRU 940068	940056 THRU 940065
940070 THRU 940078	940069
940085 THRU 940093	940079 THRU 940084
940105 THRU 940107	940094 THRU 940104
940113 THRU 940123	940108 THRU 940112
940138 THRU 940140	940124 THRU 940137
940151 THRU 940155	940141 THRU 940150
940166 THRU 940171	940156 THRU 940165
940173 THRU 940174	940172
940181 THRU 940189	940175 THRU 940180
	940190 THRU 940192

CHECK BOLTS (EWB0420-4H-13 0.25"-28 UNJF-3A, Material-A-286), Nut BACN10HR4CS, Washer NAS1587-4C, Washer NAS1149E0463R

Reading database file for bolted interface, abort landing case

Note that ".txt" is generated from NASPOST result (.LIS file) by just removing all words and comments. The following bolt analysis will analyze the EWB0420-4H-13 (200 ksi), 0.25-28 UNJF fasteners. There is a total of 109, EWB0420-4H-13, fasteners used to attach the Upper Support Ring to the Outer Cylinder.

data := READPRN("USROC_250nut_abortland.txt")

$s := 1 .. rows(data)$

Flange 1: Outer Cylinder
Part number: SDG39135779-001
Material: 7050-T7451, AMS 4108

Flange 2: Upper Support Ring
Part number: SEG39135786-301
Material: 7050-T7451, AMS 4108

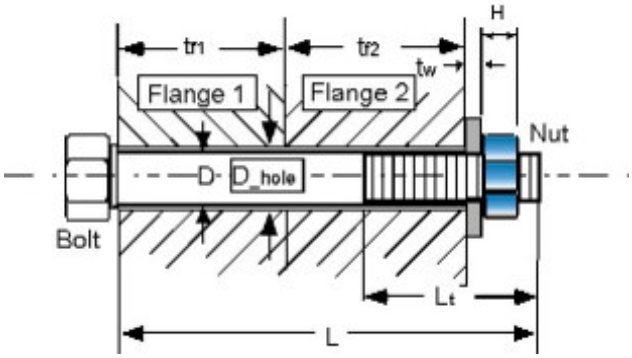

Loads

Applied tensile load $P_s := data_{s,3} \cdot lbf$ $ID_s := data_{s,1}$

Applied shear load $V_s := data_{s,4} \cdot lbf$ $LC_s := data_{s,2}$

Applied bending moment $M_s := data_{s,5} \cdot in \cdot lbf$

Factors of Safety

Ultimate $SFu := 1.4$ Yield $SFy := 1.1$

Joint Separation $SFsep := 1.2$ Fitting factor $FF := 1.15$

Temperature data (Ref Appendix C2), Abort Landing Case

Assembly $Temp_initial := 70 \cdot deg$

Maximum $Temp_max := 150 \cdot deg$

Minimum $Temp_min := 40 \cdot deg$

Bolt and Nut Data

Nominal diameter of bolt $D := .250 \cdot in$ Number of threads/inch $Nt := 28 \cdot \frac{1}{in}$

Total length of bolt $L := 1.2995 \cdot in$ Height of nut $H := 0.280 \cdot in$

Threaded length $Lt := 0.487 \cdot in$ (If bolt is fully threaded, input Lt = L)

This file uses the calculations shown in \\escfil02\2i11_mathcad\8307_bolts\thread_data.mcd

Washer Data

Thickness of washers (Includes thickness of NAS1587-4C and NAS1149E0463R) $tw := 0.141 \cdot in$

Outer Diameter of washer $Dw := 0.531in$

Inner Diameter of washer $Dwi := 0.252 \cdot in$

Bolt head dia. across flats $dw := 0.433 \cdot in$ (used only if there is no washer)

Note: If there is no washer tw, Dw and Dwi should be zero

Flange data

Thickness of flange 1 (SEG39135779-001) $tf1 := .375 \cdot in$

Thickness of flange 2 (SDG39135784-001) $tf2 := .375in$

Diameter of hole (SEG39135779-001) $D_hole := 0.289 \cdot in$

Material Property Data

Bolt

Temperature correction factor for bolt strength ultimate. (Ref. MIL-HDBK-5J, fig. 6.2.1.1.1) $TSu_bolt := 0.97$ Yield $TSy_bolt := 0.97$

Bolt ultimate tensile allowable stress $Ftu_bolt := 200000 \cdot psi$ (EWB 0420)

Bolt ultimate shear allowable stress $Fsu_bolt := 0.6 \cdot Ftu_bolt$

Bolt yield Tensile allowable stress $Fty_bolt := 180000 \cdot psi$ (AMS 5726C)

Temperature correction factor for bolt modulus $TE_bolt := 0.98$ (Ref. MIL-HDBK-5J, fig. 6.2.1.1.4(a))

Modulus of elasticity of bolt $E_bolt := \left(29.1 \cdot 10^{6} \cdot psi\right)$ (Ref. MIL-HDBK-5J, table 6.2.1.0(b))

Thermal coefficient for bolt $\beta_bolt_hot := 9.1 \cdot 10^{-6} \cdot \frac{\frac{in}{in}}{deg}$ $\beta_bolt_cold := 8.9 \cdot 10^{-6} \cdot \frac{\frac{in}{in}}{deg}$

(Ref. MIL-HDBK-5J, fig. 6.2.1.0)

Nut

Temperature correction factor for nut strength $TS_nut := 0.97$

Ultimate tensile allowable stress $Ftu_nut := 220000 \cdot psi$ (Ref. BACN10HR)

Ultimate Shear allowable stress: $Fsu_nut := 0.6 \cdot Ftu_nut$

Ultimate axial strength of nut $Ptu_nut := 7973 \cdot lbf$ (220/125=1.76, 4530*1.76=7973, Ref. NAS1291)

Washer

Temperature correction factor for washer modulus $TE_washer := .97$ (Ref. MIL-HDBK-5J, fig. 6.2.1.1.1)

Modulus of elasticity of washer: $E_washer := \left(29.1 \cdot 10^{6} \cdot psi\right)$ (Ref. MIL-HDBK-5J, table 6.2.1.0(b))

Flanges

Stiffness of the joint depends upon number of members in the grip of the fasteners,
Modulus of elasticity of these members, and diameters of the bolt and the washer.

Temperature correction factor for flange 1 $Tf1E := .98$ (modulus) (Ref. MIL-HDBK-5J, fig. 3.7.6.1.4 and Appendix C9)

Temperature correction factor for flange 2 $Tf2E := .98$

Modulus of elasticity for the parts in the joint $E_flange1 := \left(10.3 \cdot 10^{6} \cdot psi\right)$ $E_flange2 := \left(10.3 \cdot 10^{6} \cdot psi\right)$

(Ref. MIL-HDBK-5J, table 3.7.4.0(d))

Coefficient of thermal expansion for flanges $\beta_flange1_hot := 12.8 \cdot 10^{-6} \cdot \frac{\frac{in}{in}}{deg}$ $\beta_flange2_hot := 12.8 \cdot 10^{-6} \cdot \frac{\frac{in}{in}}{deg}$

(Ref. MIL-HDBK-5J, table 3.7.4.0(d) and Appendix C9)

$\beta_flange1_cold := 12.1 \cdot 10^{-6} \cdot \frac{\frac{in}{in}}{deg}$ $\beta_flange2_cold := 12.1 \cdot 10^{-6} \cdot \frac{\frac{in}{in}}{deg}$

Torque/Preload data

Maximum torque (65% of yield) $Tmax := 160 \cdot in \cdot lbf$ Loading plane factor $n := 0.5$

Minimum torque (95% of max. torque) $Tmin := 152 in \cdot lbf$ Preload Uncertainty $u := 0.25$

Torque coefficient $k := 0.15$

This file uses the calculations shown in \\escfil02\2i11_mathcad\8307_bolts\multi_bolt_stiffness_nut_RevC

Prepared By	Name	Date		File Name
	G. Reyes	03/30/06	Engineering and Science Contract Group	USROC_250_r3.mcd
Checked By	C. Bala		*Structural Analysis Section*	Drawing No. SEG39135776
Title	Bolts from Upper Support Ring to Outer Cylinder			

Bolt Load data

Bolt/joint stiffness factor	$= 0.28$	Preload due to temperature	$Pthr_pos = 242.6\,lbf$
Max. preload	$PLDmax = 5576\,lbf$		$Pthr_neg = -78.7\,lbf$
Min. preload	$PLDmin = 2694.6\,lbf$	Uncertainty factor	$u = 0.25$
Joint separation load	$max(Psep) = 924\,lbf$	Torque coefficient	$k = 0.15$
Max. load on the bolt(ultimate)	$max(Pb) = 5749.8\,lbf$	Loading plane factor	$n = 0.5$
Max. load on the bolt(yield)	$max(Pby) = 5712.5\,lbf$	Thread pullout strength required to develop full strength of bolt	$PAs = 8213.8\,lbf$
Bolt ultimate tensile strength	$PAt = 6844.9\,lbf$	Nut ultimate tensile strength	$Ptu_nut = 7733.8\,lbf$

Length_check = "Bolt length is sufficient"

Summary of Margins for bolt:

Joint separation	$MS_min_{1,1} = 1.949$	Direct Thread shear Ultimate	$MS_min_{6,1} = 5.626$
Direct Tension Ultimate	$MS_min_{2,1} = 4.521$	Total Thread shear Ultimate	$MS_min_{7,1} = 0.429$
Direct Tension Yield	$MS_min_{3,1} = 5.324$	Shear Ultimate	$MS_min_{8,1} = 5.43$
Total Tension Ultimate	$MS_min_{4,1} = 0.190$	Bending Ultimate	$MS_min_{9,1} = 10$
Total Tension Yield	$MS_min_{5,1} = 0.078$	Combined shear, tension and bending ultimate	$MS_min_{10,1} = 0.189$

Determination of the smallest margin of safety for the bolt, and the failure mode:

$MSbolt := min(MS)$

$MSbolt = 0.078$ Minimum Margin of Safety

Failure_Mode = "Total Tension Yield"

$MS_min_ID = 940131$	Element Identification and Bolt Number (940131) for Minimum Margin
$MS_min_LC = 2038$	Load Case Number for Minimum Margin
$MS_min_P = 770$	Applied Tensile Load for Minimum Margin
$MS_min_V = 442$	Applied Shear Load for Minimum Margin
$MS_min_M = 0$	Applied Bending Moment for Minimum Margin

Bolt Fail-Safe Analysis for Upper Support Ring to Outer Cylinder EWB0420-4H-13 Bolts

It will be assumed that one bolt will fail. Bolt number 940131 has been removed and only load case 2038 is included in the following fail-safe analysis. There are now 108, EWB0420-4H-13 (200 ksi), 0.25-28 UNJF fasteners, holding the Upper Support Ring to the Outer Cylinder. The drawing number illustrating the Outer Cylinder to the Upper Support Ring is SEG39135776.

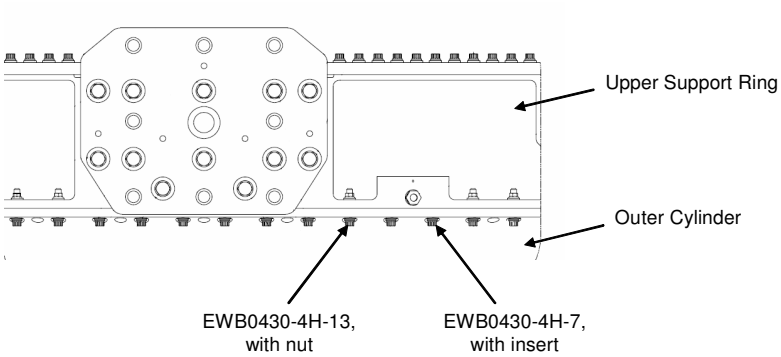

Close View of Vacuum Case Assembly (Location of fasteners is shown)

Reading database file for bolted interface, abort landing case

Note that ".txt" is generated from NASPOST result (.LIS file) by just removing all words and comments.

$data_fs := READPRN("fs_USROC_250nut_lc2038.txt")$

$s := 1 .. rows(data_fs)$

Fail-safe Loads from Loads Model 2-05
Load Case 2038

Applied tensile load $P_FS_s := data_fs_{s,3} \cdot lbf$ $ID_FS_s := data_fs_{s,1}$

Applied shear load $V_FS_s := data_fs_{s,4} \cdot lbf$ $LC_FS_s := data_fs_{s,2}$

Applied bending moment $M_FS_s := data_fs_{s,5} \cdot in \cdot lbf$

Fail-safe Factors of Safety

Ultimate $SFu_FS := 1.0$

Joint Separation $SFsep_FS := 1.0$

This file uses the calculations shown in \\escfil02\2i11_mathcad\8307_bolts\ multi_bolt_stiffness_nut_FS_RevC

Prepared By	Name	Date	Engineering and Science Contract Group	File Name
	G. Reyes	03/30/06		USROC_250_r3.mcd
Checked By	C. Bala		*Structural Analysis Section*	Drawing No. SEG39135776
Title	Bolts from Upper Support Ring to Outer Cylinder			

Bolt Fail-safe Load data

Joint separation load $\max(Psep_FS) = 1023.829\,lbf$

Max. load on the bolt(ultimate) $\max(Pb_FS) = 5741\,lbf$

Summary of fail-safe Margins for bolt:

Joint separation	$MS_minFS_{1,1} = 1.662$	Total Thread shear Ultimate	$MS_minFS_{5,1} = 0.431$
Direct Tension Ultimate	$MS_minFS_{2,1} = 4.814$	Shear Ultimate	$MS_minFS_{6,1} = 10.15$
Total Tension Ultimate	$MS_minFS_{3,1} = 0.192$	Bending Ultimate	$MS_minFS_{7,1} = 10$
Direct Thread shear Ultimate	$MS_minFS_{4,1} = 5.98$	Combined shear, tension and bending ultimate	$MS_minFS_{8,1} = 0.1918$

Determination of the smallest fail-safe margin of safety for the bolt, and the failure mode:

$MSbolt_FS := \min(MS_FS)$

$MSbolt_FS = 0.192$ Failure_Mode_FS = "Combined Shear Tension Bending Ultimate"

Joint and Load Case Identification:

$MS_min_ID = 940132$	Element Identification and Bolt Number (940132) for Minimum Margin
$MS_min_LC = 2038$	Load Case Number for Minimum Margin
$MS_min_P = 1023.8$	Applied Tensile Load for Minimum Margin
$MS_min_V = 391.2$	Applied Shear Load for Minimum Margin
$MS_min_M = 0$	Applied Bending Moment for Minimum Margin

Cont: Bolt Fail-Safe Analysis for Upper Support Ring to Outer Cylinder EWB0420-4H-13 Bolts

An additional fail-safe check will be performed on the EWB0420-4H-13 fasteners. On page 3.10.3-11, analysis will be performed on the EWB0420-4H-7 fasteners with the MS51830CA-202L insert. For this case, the minimum margin of safety was determined to be at Bolt Number 940009, with Load Case 2057. Therefore, this check will apply the new loads from Load Case 2057 without Bolt Number 940009 and will show how the Load Case 2057 will affect the EWB0420-4H-13 fasteners when removing a EWB0420-4H-7 fastener.

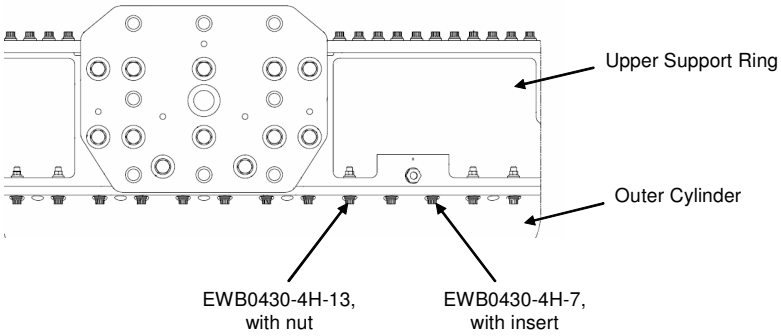

Close View of Vacuum Case Assembly (Location of fasteners is shown)

Reading database file for bolted interface, abort landing case

Note that ".txt" is generated from NASPOST result (.LIS file) by just removing all words and comments.

$data_fs := READPRN("fs_250int_lc2057_check.txt")$

$s := 1 .. rows(data_fs)$

Fail-safe Loads from Loads Model 2-05
Load Case 2057

Applied tensile load $P_FS_s := data_fs_{s,3} \cdot lbf$ $ID_FS_s := data_fs_{s,1}$

Applied shear load $V_FS_s := data_fs_{s,4} \cdot lbf$ $LC_FS_s := data_fs_{s,2}$

Applied bending moment $M_FS_s := data_fs_{s,5} \cdot in \cdot lbf$

Fail-safe Factors of Safety

Ultimate $SFu_FS := 1.0$

Joint Separation $SFsep_FS := 1.0$

This file uses the calculations shown in \\escfil02\2i11_mathcad\8307_bolts\ multi_bolt_stiffness_nut_FS_RevC

Bolt Fail-safe Load data

Joint separation load $\max(Psep_FS) = 695.345\ lbf$

Max. load on the bolt(ultimate) $\max(Pb_FS) = 5688.1\ lbf$

Summary of fail-safe Margins for bolt:

Joint separation	$MS_minFS_{1,1} = 2.919$	Total Thread shear Ultimate	$MS_minFS_{5,1} = 0.444$
Direct Tension Ultimate	$MS_minFS_{2,1} = 7.560$	Shear Ultimate	$MS_minFS_{6,1} = 9.04$
Total Tension Ultimate	$MS_minFS_{3,1} = 0.203$	Bending Ultimate	$MS_minFS_{7,1} = 10$
Direct Thread shear Ultimate	$MS_minFS_{4,1} = 9.27$	Combined shear, tension and bending ultimate	$MS_minFS_{8,1} = 0.2032$

Determination of the smallest fail-safe margin of safety for the bolt, and the failure mode:

$MSbolt_FS := \min(MS_FS)$

$MSbolt_FS = 0.203$ Failure_Mode_FS = "Combined Shear Tension Bending Ultimate"

Joint and Load Case Identification:

$MS_min_ID = 940131$	Element Identification and Bolt Number (940131) for Minimum Margin
$MS_min_LC = 2057$	Load Case Number for Minimum Margin
$MS_min_P = 695.3$	Applied Tensile Load for Minimum Margin
$MS_min_V = 289.8$	Applied Shear Load for Minimum Margin
$MS_min_M = 0$	Applied Bending Moment for Minimum Margin

CHECK BOLTS (EWB 0420-4H-7 bolts 0.250-28UNJF-3A, Material-A-286), Insert MS51830CA-202L, Washer NAS1587-4C

Reading database file for bolted interface, abort landing case

Note that ".txt" is generated from NASPOST result (.LIS file) by just removing all words and comments. The following bolt analysis will analyze the EWB0420-4H-7 (200 ksi), 0.25-28 UNJF fasteners. There is a total of 83, EWB 0420-4H-7, fasteners used to attach the Upper Support Ring to the Outer Cylinder. A total of 20 load cases are included in the NASPOST run. Note that this bolted interface was checked for minimum margins of safety for launch, nominal landing, and abort landing load cases. The abort landing case combined with abort landing temperature data resulted in the lowest minimum margins of safety. Therefore, the abort landing case is used in this analysis.

$data := READPRN("USROC_250int_abortland.txt")$

$s := 1 .. rows(data)$

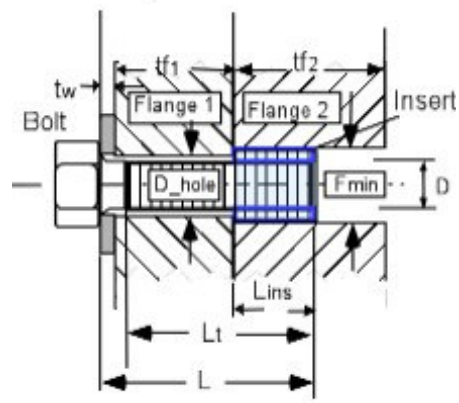

Flange 1: Outer Cylinder
Part number: SEG39135779-001
Material: 7050-T7451, AMS 4108

Flange 2: Upper Support Ring
Part number: SEG39135786-301
Material: 7050-T7451, AMS 4108

Loads

Applied tensile load $P_s := data_{s,3} \cdot lbf$ $ID_s := data_{s,1}$

Applied shear load $V_s := data_{s,4} \cdot lbf$ $LC_s := data_{s,2}$

Applied bending moment $M_s := data_{s,5} \cdot in \cdot lbf$

Factors of Safety

Ultimate $SFu := 1.4$ Yield $SFy := 1.1$

Joint Separation $SFsep := 1.2$ Fitting factor $FF := 1.15$

Temperature data

Assembly $Temp_initial := 70 \cdot deg$

Maximum $Temp_max := 150 \cdot deg$

Minimum $Temp_min := 40 \cdot deg$

Bolt and Insert Data

Nominal diameter of bolt $D := 0.250 \cdot in$ Number of threads/inch $Nt := 28 \cdot \frac{1}{in}$

Total length of bolt $L := .9245 \cdot in$ Length of insert $Lins := 0.375 \cdot in$

Threaded length $Lt := 0.487 \cdot in$ Min. external diameter of insert $Fmin := 0.312 \cdot in$

(If bolt is fully threaded, input Lt = L) Depth of recess for insert $lr := 0.02 \cdot in$

This file uses the calculations shown in \\escfil02\2i11_mathcad\8307_bolts\thread_data.mcd

Washer Data

Thickness of washer $tw := 0.078 \cdot in$

Outer Diameter of washer $Dw := .531 in$

Inner Diameter of washer $Dwi := 0.252 \cdot in$

Flange data

Thickness of flange 1 (SEG39135779-001) $tf1 := .375 \cdot in$

Thickness of flange 2 $tf2 := .375 in$ (Length of insert)

Diameter of hole (SEG39135779-001) $D_hole := 0.289 \cdot in$

Bolt head dia. across flats $dw := 0.433 \cdot in$ (used only if there is no washer)

Note: If there is no washer, tw, Dw, and Dwi should be zero.

Material Property Data

Bolt

Temperature correction factor for bolt strength ultimate $TSu_bolt := .97$ yield $TSy_bolt := .97$

(Ref. MIL-HDBK-5J, fig. 6.2.1.1.1)

Bolt ultimate tensile allowable stress $Ftu_bolt := 200000 \cdot psi$ (EWB 0420)

Bolt ultimate shear allowable stress $Fsu_bolt := 0.6 \cdot Ftu_bolt$

Bolt yield tensile allowable $Fty_bolt := 180000 \cdot psi$ (AMS 5726C)

Temperature correction factor for bolt modulus $TE_bolt := .98$ (Ref. MIL-HDBK-5J, fig. 6.2.1.1.4(a))

Modulus of elasticity of bolt $E_bolt := \left(29.1 \cdot 10^{6} \cdot psi\right)$ (Ref. MIL-HDBK-5J, table 6.2.1.0(b))

Thermal coefficient for bolt: $\beta_bolt_hot := 9.1 \cdot 10^{-6} \cdot \frac{\frac{in}{in}}{deg}$ $\beta_bolt_cold := 8.9 \cdot 10^{-6} \cdot \frac{\frac{in}{in}}{deg}$

(Ref. MIL-HDBK-5J, fig. 6.2.1.0)

Insert

Temperature correction factor for insert strength $TS_ins := .97$ (Ref. MIL-HDBK-5J, fig. 6.2.1.1.1)

Ultimate tensile allowable stress $Ftu_ins := 140000 \cdot psi$ (Ref. MS51830)

Ultimate shear allowable stress $Fsu_ins := 0.6 \cdot Ftu_ins$

Washer

Temperature correction factor for washer modulus $TE_washer := .97$ (Ref. MIL-HDBK-5J, fig. 6.2.1.1.1)

Modulus of elasticity of washer $E_washer := \left(29.1 \cdot 10^{6} \cdot psi\right)$ (Ref. MIL-HDBK-5J, table 6.2.1.0(b))

Flanges

Stiffness of the joint depends upon number of members in the grip of the fasteners,
Modulus of elasticity of these members, and diameters of the bolt and the washer.

Temperature correction factor for flange 1 $Tf1E := .98$ (modulus) (Ref. MIL-HDBK-5J, fig. 3.7.6.1.4 and Appendix C9)

Temperature correction factor for flange 2 $Tf2E := .98$ (modulus)

$Tf2s := .97$ (strength) (Ref. MIL-HDBK-5J, fig. 3.7.4.2.1)

Shear strength allowable for flanges $Fsu_f2 := 42000 \cdot psi$ (Ref. MIL-HDBK-5J, table 3.7.4.0(d))

Modulus of elasticity for the parts in the joint $E_flange1 := \left(10.3 \cdot 10^{6} \cdot psi\right)$ $E_flange2 := \left(10.3 \cdot 10^{6} \cdot psi\right)$

(Ref. MIL-HDBK-5J, table 3.7.4.0(d))

Coefficient of thermal expansion for flanges $\beta_flange1_hot := 12.8 \cdot 10^{-6} \cdot \frac{\frac{in}{in}}{deg}$ $\beta_flange2_hot := 12.8 \cdot 10^{-6} \cdot \frac{\frac{in}{in}}{deg}$

(Ref. MIL-HDBK-5J, table 3.7.4.0(d) and Appendix C9)

$\beta_flange1_cold := 12.1 \cdot 10^{-6} \cdot \frac{\frac{in}{in}}{deg}$ $\beta_flange2_cold := 12.1 \cdot 10^{-6} \cdot \frac{\frac{in}{in}}{deg}$

Torque/Preload data

Maximum torque (65% of yield) $Tmax := 160 \cdot in \cdot lbf$ Loading plane factor: $n := .5$

Minimum torque (95% of max. torque) $Tmin := 152 \cdot in \cdot lbf$ Preload Uncertainty: $u := 0.25$

Torque coefficient: $k := 0.15$

This file uses the calculations shown in \\escfil02\2i11_mathcad\8307_bolts\multi_bolt_stiffness_insert_RevC

Insert Stiffness File

Prepared By	Name	Date		File Name
	G. Reyes	03/30/06		USROC_250_r3.mcd
Checked By	C. Bala		**Engineering and Science Contract Group** *Structural Analysis Section*	Draw ing No. SEG39135776
Title	Bolts from Upper Support Ring to Outer Cylinder			

Bolt Load data

Bolt/joint stiffness factor	$= 0.284$	Preload due to temperature	$Pthr_pos = 305.6\,lbf$ $Pthr_neg = -99.1\,lbf$
Max. preload	$PLDmax = 5639\,lbf$	Uncertainty factor	$u = 0.25$
Min. preload	$PLDmin = 2674.2\,lbf$	Torque coefficient	$k = 0.15$
Joint separation load	$max(Psep) = 924\,lbf$	Loading plane factor	$n = 0.5$
Max. load on the bolt(ultimate)	$max(Pb) = 5814.8\,lbf$	Thread shear pullout load of bolt or insert	$Pths = 13106\,lbf$
Max. load on the bolt(yield)	$max(Pby) = 5777.1\,lbf$	Thread shear pullout load in parent metal	$Ppths = 7487.3\,lbf$
Bolt ultimate tensile strength	$PAt = 6844.9\,lbf$		

Length_check = "Bolt length is sufficient"

Summary of Margins for bolt:

Joint separation	$MS_min_{1,1} = 1.949$	Direct Thread shear Ultimate	$MS_min_{6,1} = 5.284$
Direct Tension Ultimate	$MS_min_{2,1} = 4.521$	Total Thread shear Ultimate	$MS_min_{7,1} = 0.289$
Direct Tension Yield	$MS_min_{3,1} = 5.324$	Shear Ultimate	$MS_min_{8,1} = 5.28$
Total Tension Ultimate	$MS_min_{4,1} = 0.179$	Bending Ultimate	$MS_min_{9,1} = 10$
Total Tension Yield	$MS_min_{5,1} = 0.067$	Combined shear, tension and bending ultimate	$MS_min_{10,1} = 0.178$

Determination of the smallest margin of safety for the bolt, and the failure mode:

$MSbolt := min(MS)$

$MSbolt = 0.067$ Minimum Margin of Safety

Failure_Mode = "Total Tension Yield"

$MS_min_ID = 940009$	Element Identification and Bolt Number (940009) for Minimum Margin
$MS_min_LC = 2057$	Load Case Number for Minimum Margin
$MS_min_P = 740$	Applied Tensile Load for Minimum Margin
$MS_min_V = 165$	Applied Shear Load for Minimum Margin
$MS_min_M = 0$	Applied Bending Moment for Minimum Margin

Bolt Fail-Safe Analysis for Upper Support Ring to Outer Cylinder EWB0420-4H-7 Bolts

It will be assumed that one bolt will fail. Bolt number 940009 has been removed and only load case 2057 is included in the following fail-safe analysis. There are now 82, EWB0420-4H-7 (200 ksi), 0.25-28 UNJF fasteners, holding the Upper Support Ring to the Outer Cylinder. The drawing number illustrating the Outer Cylinder to the Upper Support Ring is SEG39135776.

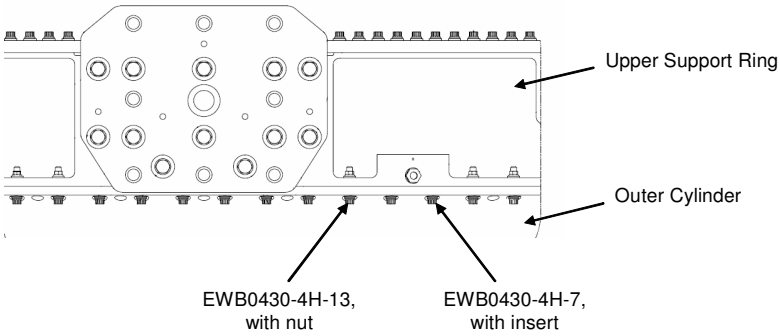

Close View of Vacuum Case Assembly
(Location of fasteners is shown)

Reading database file for bolted interface, abort landing case

Note that ".txt" is generated from NASPOST result (.LIS file) by just removing all words and comments.

$data_fs := READPRN("fs_USROC_250int_lc2057.txt")$

$s := 1 .. rows(data_fs)$

Fail-safe Loads from Loads Model 2-05
Load Case 2057

Applied tensile load $P_FS_s := data_fs_{s,3} \cdot lbf$ $ID_FS_s := data_fs_{s,1}$

Applied shear load $V_FS_s := data_fs_{s,4} \cdot lbf$ $LC_FS_s := data_fs_{s,2}$

Applied bending moment $M_FS_s := data_fs_{s,5} \cdot in \cdot lbf$

Fail-safe Factors of Safety

Ultimate $SFu_FS := 1.0$

Joint Separation $SFsep_FS := 1.0$

This file uses the calculations shown in \\escfil02\2i11_mathcad\8307_bolts\ multi_bolt_stiffness_insert_FS_RevC

Bolt Fail-safe Load data

Joint separation load $\max(Psep_FS) = 813.652\ lbf$

Max. load on the bolt(ultimate) $\max(Pb_FS) = 5771.7\ lbf$

Summary of fail-safe Margins for bolt:

Joint separation	$MS_minFS_{1,1} = 2.330$	Total Thread shear Ultimate	$MS_minFS_{5,1} = 0.297$
Direct Tension Ultimate	$MS_minFS_{2,1} = 6.315$	Shear Ultimate	$MS_minFS_{6,1} = 8.28$
Total Tension Ultimate	$MS_minFS_{3,1} = 0.186$	Bending Ultimate	$MS_minFS_{7,1} = 10$
Direct Thread shear Ultimate	$MS_minFS_{4,1} = 7$	Combined shear, tension and bending ultimate	$MS_minFS_{8,1} = 0.1857$

Determination of the smallest fail-safe margin of safety for the bolt, and the failure mode:

$MSbolt_FS := \min(MS_FS)$

$MSbolt_FS = 0.186$ Failure_Mode_FS = "Combined Shear Tension Bending Ultimate"

Joint and Load Case Identification:

$MS_min_ID = 940010$	Element Identification and Bolt Number (940010) for Minimum Margin
$MS_min_LC = 2057$	Load Case Number for Minimum Margin
$MS_min_P = 813.7$	Applied Tensile Load for Minimum Margin
$MS_min_V = 192$	Applied Shear Load for Minimum Margin
$MS_min_M = 0$	Applied Bending Moment for Minimum Margin

Cont: Bolt Fail-Safe Analysis for Upper Support Ring to Outer Cylinder EWB0420-4H-7 Bolts

An additional fail-safe check will be performed on the EWB0420-4H-7 fasteners. On page 3.10.3-3, analysis was performed on the EWB0420-4H-13 fasteners with the BACN10HR4CS nut. For this case, the minimum margin of safety was determined to be at Bolt Number 940131, with Load Case 2038. Therefore, this check will apply the new loads from Load Case 2038 without Bolt Number 940131 and will show how the Load Case 2038 will affect the EWB0420-4H-7 fasteners when removing a EWB0420-4H-13 fastener.

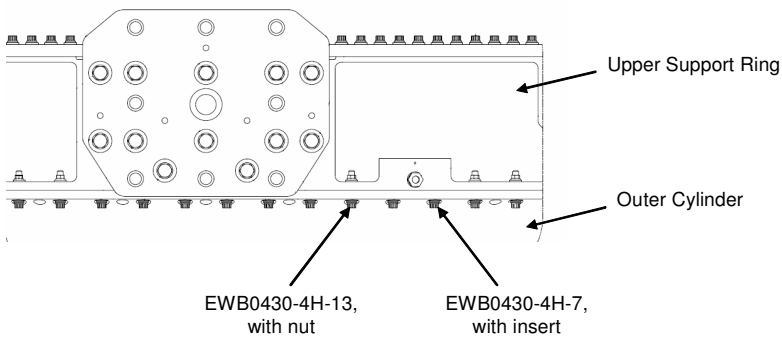

Close View of Vacuum Case Assembly (Location of fasteners is shown)

Reading database file for bolted interface, abort landing case

Note that ".txt" is generated from NASPOST result (.LIS file) by just removing all words and comments.

$data_fs := READPRN("fs_250nut_lc2038_check.txt")$

$s := 1 .. rows(data_fs)$

Fail-safe Loads - loads model 2-05
Load Case 2038

Applied tensile load $P_FS_s := data_fs_{s,3} \cdot lbf$ $ID_FS_s := data_fs_{s,1}$

Applied shear load $V_FS_s := data_fs_{s,4} \cdot lbf$ $LC_FS_s := data_fs_{s,2}$

Applied bending moment $M_FS_s := data_fs_{s,5} \cdot in \cdot lbf$

Fail-safe Factors of Safety

Ultimate $SFu_FS := 1.0$

Joint Separation $SFsep_FS := 1.0$

This file uses the calculations shown in \\escfil02\2i11_mathcad\8307_bolts\ multi_bolt_stiffness_insert_FS_RevC

Bolt Fail-safe Load data

Joint separation load $\max(Psep_FS) = 608.803\,lbf$

Max. load on the bolt(ultimate) $\max(Pb_FS) = 5738.3\,lbf$

Summary of fail-safe Margins for bolt:

Joint separation	$MS_minFS_{1,1} = 3.451$	Total Thread shear Ultimate	$MS_minFS_{5,1} = 0.305$
Direct Tension Ultimate	$MS_minFS_{2,1} = 8.777$	Shear Ultimate	$MS_minFS_{6,1} = 9.04$
Total Tension Ultimate	$MS_minFS_{3,1} = 0.193$	Bending Ultimate	$MS_minFS_{7,1} = 10$
Direct Thread shear Ultimate	$MS_minFS_{4,1} = 9.69$	Combined shear, tension and bending ultimate	$MS_minFS_{8,1} = 0.1928$

Determination of the smallest fail-safe margin of safety for the bolt, and the failure mode:

$MSbolt_FS := \min(MS_FS)$

$MSbolt_FS = 0.193$ Failure_Mode_FS = "Combined Shear Tension Bending Ultimate"

Joint and Load Case Identification:

$MS_min_ID = 940009$	Element Identification and Bolt Number (940009) for Minimum Margin
$MS_min_LC = 2038$	Load Case Number for Minimum Margin
$MS_min_P = 608.8$	Applied Tensile Load for Minimum Margin
$MS_min_V = 80.8$	Applied Shear Load for Minimum Margin
$MS_min_M = 0$	Applied Bending Moment for Minimum Margin

3.10.4 Lower Support Ring to Outer Cylinder Bolted Interface

Lower Support Ring to Outer Cylinder Bolted Interface

The Lower Support Ring to Outer Cylinder Bolt Analysis is performed in the following report sections.

3.10.4.1	Lower Support Ring to Outer Cylinder
3.10.4.1	Lower Support Ring to Outer Cylinder Fail-Safe
3.10.4.2	Lower Support Ring to Outer Cylinder - .3125"
3.10.4.2	Lower Support Ring to Outer Cylinder Fail-Safe - .3125"

3.10.4.1 Lower Support Ring to Outer Cylinder

Lower Support Ring to Outer Cylinder Bolt Analysis

In the Vacuum Case Assembly, the Lower Support Ring is installed on the Outer Cylinder. Three separate sets of fasteners are used to attach the Lower Support Ring to the Outer Cylinder. The fasteners are EWB0420-5H-7 (200 ksi, 0.3125-24 UNJF), EWB 0420-4H-7 (200 ksi, 0.25-28 UNJF), and EWB 0420-4H-13 (200 ksi, 0.25-28 UNJF). A total of 200 fasteners are used to attach the Lower Support Ring to the Outer Cylinder. The three sets of fasteners will be analyzed separately. This section will analyze the EWB 0420-4H-7 and EWB 0420-4H-13 fasteners. Refer to Section 3.10.4.2 for bolt analysis of fasteners EWB0420-5H-7. The drawing number illustrating the Lower Support Ring to the Outer Cylinder is SEG39135776.

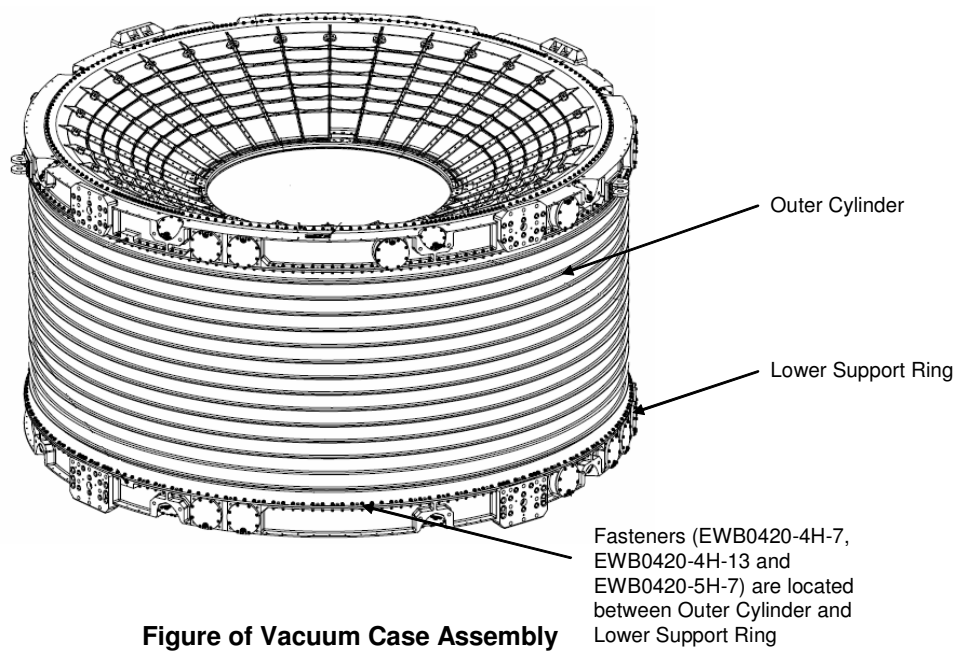

Figure of Vacuum Case Assembly

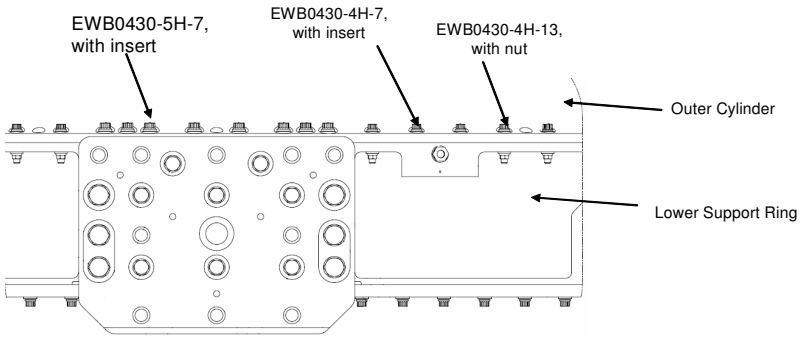

Close View of Vacuum Case Assembly
(Location of fasteners is shown)

Loads model 2-05 was used to retrieve loads at the bolted interfaces. The CBUSH elements were post processed in NASPOST for forces and moments. The CBUSH element identification numbers are 940001-940200. The following table shows the CBUSH element identification numbers corresponding to the appropriate fasteners. A linear gap model was ran for a total of 6 load cases. The load cases include 2019-2020, 2031-2032, 2053-2054 and are all included in the NASPOST run. Note that this bolted interface was checked for minimum margins of safety for launch, nominal landing, and abort landing load cases. The abort landing case combined with abort landing temperature data resulted in the lowest minimum margins of safety. Therefore, the abort landing case is used in this analysis.

CBUSH Element ID's for EWB0420-5H-7	CBUSH Element ID's for EWB0420-4H-7	CBUSH Element ID's for EWB0420-4H-13
940022 THRU 940027	940009 THRU 940011	940001 THRU 940008
940070 THRU 940075	940019 THRU 940020	940012 THRU 940018
940118 THRU 940123	940042 THRU 940044	940021
940166 THRU 940170	940047 THRU 940049	940028 THRU 940041
940193 THRU 940200	940051 THRU 940059	940045 THRU 940046
	940065 THRU 940067	940050
	940100 THRU 940108	940060 THRU 940064
	940115 THRU 940116	940068 THRU 940069
	940147 THRU 940155	940076 THRU 940099
	940161 THRU 940163	940109 THRU 940114
	940173 THRU 940175	940117
	940182 THRU 940184	940124 THRU 940146
		940156 THRU 940160
		940164 THRU 940165
		940171 THRU 940172
		940176 THRU 940181
		940185 THRU 940192

CHECK BOLTS (EWB0420-4H-7 0.250-28UNJF-3A, Material-A-286), Insert MS51830CA202L, Washer NAS1587-4C

Reading database file for bolted interface, abort landing case

Note that ".txt" is generated from NASPOST result (.LIS file) by just removing all words and comments. The following bolt analysis will analyze the EWB0420-4H-7 (200 ksi), 0.25-28 UNJF fasteners. There is a total of 52, EWB0420-4H-7, fasteners used to attach the Lower Support Ring to the Outer Cylinder.

$data := READPRN("LSR_OC_250int_abortland.txt")$

$s := 1..rows(data)$

Flange 1: Outer Cylinder
Part number: SDG39135779-001
Material: 7050-T7451, AMS4108

Flange 2: Lower Support Ring
Part number: SEG39135787-301
Material: 7050-T7451, AMS4108

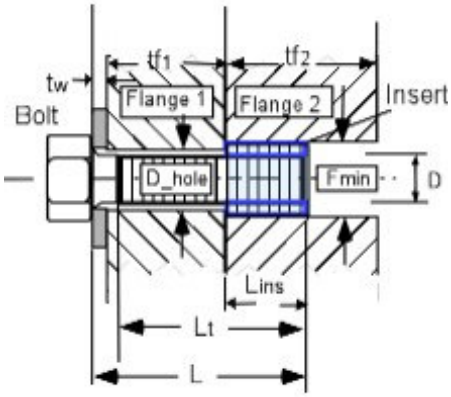

Loads

Applied tensile load $P_s := data_{s,3} \cdot lbf$ $ID_s := data_{s,1}$

Applied shear load $V_s := data_{s,4} \cdot lbf$ $LC_s := data_{s,2}$

Applied bending moment $M_s := data_{s,5} \cdot in \cdot lbf$

Factors of Safety

Ultimate $SFu := 1.4$ Yield $SFy := 1.1$

Joint Separation $SFsep := 1.2$ Fitting factor $FF := 1.15$

Temperature data (Ref Appendix C2), Abort Landing Case

Assembly $Temp_initial := 70 \cdot deg$

Maximum $Temp_max := 150 \cdot deg$

Minimum $Temp_min := 40 \cdot deg$

Bolt and Insert Data

Nominal diameter of bolt $D := 0.250 \cdot in$

Number of threads/inch $Nt := 28 \cdot \frac{1}{in}$

Total length of bolt $L := .9245 \cdot in$

Length of insert $Lins := 0.375 \cdot in$

Threaded length $Lt := 0.487 \cdot in$

Min. external diameter of insert $Fmin := 0.310 \cdot in$

(If bolt is fully threaded, input Lt = L)

Depth of recess for insert $lr := 0.02 \cdot in$

This file uses the calculations shown in \\escfil02\2i11_mathcad\8307_bolts\thread_data.mcd

Washer Data

Thickness of washer $tw := 0.078 \cdot in$

Outer Diameter of washer $Dw := .531in$

Inner Diameter of washer $Dwi := 0.252 \cdot in$

Flange data

Thickness of flange 1 $tf1 := .375 \cdot in$
(Ref. SDG39135779-001)

Thickness of flange 2 $tf2 := .375in$ (Length of insert)

Diameter of hole $D_hole := 0.289 \cdot in$
(Ref. SDG39135779-001)

Bolt head dia. across flats $dw := 0.433 \cdot in$ (used only if there is no washer)

Note: If there is no washer, tw, Dw, and Dwi should be zero.

Material Property Data

Bolt

Temperature correction factor for bolt strength ultimate $TSu_bolt := .97$ yield $TSy_bolt := .97$
(Ref. MIL-HDBK-5J, fig. 6.2.1.1.1)

Bolt ultimate tensile allowable stress $Ftu_bolt := 200000 \cdot psi$ (EWB 0420)

Bolt ultimate shear allowable stress $Fsu_bolt := 0.6 \cdot Ftu_bolt$

Bolt yield tensile allowable $Fty_bolt := 180000 \cdot psi$ (AMS 5726C)

Temperature correction factor for bolt modulus $TE_bolt := .98$ (Ref. MIL-HDBK-5J, fig. 6.2.1.1.4(a))

Modulus of elasticity of bolt $E_bolt := \left(29.1 \cdot 10^{6} \cdot psi\right)$ (Ref. MIL-HDBK-5J, table 6.2.1.0(b))

Thermal coefficient for bolt: $\beta_bolt_hot := 9.1 \cdot 10^{-6} \cdot \frac{\frac{in}{in}}{deg}$ $\beta_bolt_cold := 8.9 \cdot 10^{-6} \cdot \frac{\frac{in}{in}}{deg}$
(Ref. MIL-HDBK-5J, fig. 6.2.1.0)

Insert

Temperature correction factor for insert strength $TS_ins := .97$ (Ref. MIL-HDBK-5J, fig. 6.2.1.1.1)

Ultimate tensile allowable stress $Ftu_ins := 140000 \cdot psi$ (Ref. MS51830)

Ultimate shear allowable stress $Fsu_ins := 0.6 \cdot Ftu_ins$

Washer

Temperature correction factor for washer modulus $TE_washer := .97$ (Ref. MIL-HDBK-5J, fig. 6.2.1.1.1)

Modulus of elasticity of washer $E_washer := \left(29.1 \cdot 10^{6} \cdot psi\right)$ (Ref. MIL-HDBK-5J, table 6.2.1.0(b))

Flanges

Stiffness of the joint depends upon number of members in the grip of the fasteners,
Modulus of elasticity of these members, and diameters of the bolt and the washer.

Temperature correction factor for flange 1 $Tf1E := .98$ (modulus) (Ref. MIL-HDBK-5J, fig. 3.7.6.1.4 and Appendix C9)

Temperature correction factor for flange 2 $Tf2E := .98$ (modulus)

$Tf2s := .97$ (strength) (Ref. MIL-HDBK-5J, fig. 3.7.4.2.1)

Shear strength allowable for flanges $Fsu_f2 := 42000 \cdot psi$ (Ref. MIL-HDBK-5J, table 3.7.4.0(d))

Modulus of elasticity for the parts in the joint $E_flange1 := \left(10.3 \cdot 10^{6} \cdot psi\right)$ $E_flange2 := \left(10.3 \cdot 10^{6} \cdot psi\right)$

(Ref. MIL-HDBK-5J, table 3.7.4.0(d))

Coefficient of thermal expansion for flanges $\beta_flange1_hot := 12.8 \cdot 10^{-6} \cdot \frac{\frac{in}{in}}{deg}$ $\beta_flange2_hot := 12.8 \cdot 10^{-6} \cdot \frac{\frac{in}{in}}{deg}$

(Ref. MIL-HDBK-5J, table 3.7.4.0(d) and Appendix C9)

$\beta_flange1_cold := 12.1 \cdot 10^{-6} \cdot \frac{\frac{in}{in}}{deg}$ $\beta_flange2_cold := 12.1 \cdot 10^{-6} \cdot \frac{\frac{in}{in}}{deg}$

Torque/Preload data

Maximum torque (65% of yield) $Tmax := 160 \cdot in \cdot lbf$

Minimum torque (95% of max. torque) $Tmin := 152 \cdot in \cdot lbf$

Torque coefficient: $k := 0.15$

Loading plane factor: $n := .5$

Preload Uncertainty: $u := 0.25$

This file uses the calculations shown in \\escfil02\2i11_mathcad\8307_bolts\multi_bolt_stiffness_insert_RevC

Insert Stiffness File

Prepared By	Name	Date	Engineering and Science Contract Group	File Name
	G. Reyes	04/07/06		LSROC_250_r3.mcd
Checked By	C. Bala		*Structural Analysis Section*	Drawing No. SEG39135776
Title	Bolts from Lower Support Ring to Outer Cylinder			

Bolt Load data

Bolt/joint stiffness factor	$= 0.284$	Preload due to temperature	$Pthr_pos = 305.6\,lbf$
			$Pthr_neg = -99.1\,lbf$
Max. preload	$PLDmax = 5639\,lbf$	Uncertainty factor	$u = 0.25$
Min. preload	$PLDmin = 2674.2\,lbf$	Torque coefficient	$k = 0.15$
Joint separation load	$max(Psep) = 765.6\,lbf$	Loading plane factor	$n = 0.5$
Max. load on the bolt(ultimate)	$max(Pb) = 5784.7\,lbf$	Thread shear pullout load of bolt or insert	$Pths = 13106\,lbf$
Max. load on the bolt(yield)	$max(Pby) = 5753.5\,lbf$		$Ppths = 7439.3\,lbf$
Bolt ultimate tensile strength	$PAt = 6844.9\,lbf$	Thread shear pullout load in parent metal	

Length_check = "Bolt length is sufficient"

Summary of Margins for bolt:

Joint separation	$MS_min_{1,1} = 2.540$	Direct Thread shear Ultimate	$MS_min_{6,1} = 6.242$
Direct Tension Ultimate	$MS_min_{2,1} = 5.664$	Total Thread shear Ultimate	$MS_min_{7,1} = 0.286$
Direct Tension Yield	$MS_min_{3,1} = 6.633$	Shear Ultimate	$MS_min_{8,1} = 5.8$
Total Tension Ultimate	$MS_min_{4,1} = 0.183$	Bending Ultimate	$MS_min_{9,1} = 10$
Total Tension Yield	$MS_min_{5,1} = 0.071$	Combined shear, tension and bending ultimate	$MS_min_{10,1} = 0.180$

Determination of the smallest margin of safety for the bolt, and the failure mode:

$MSbolt := min(MS)$

$MSbolt = 0.071$ Minimum Margin of Safety

Failure_Mode = "Total Tension Yield"

$MS_min_ID = 940147$	Element Identification and Bolt Number (940147) for Minimum Margin
$MS_min_LC = 2053$	Load Case Number for Minimum Margin
$MS_min_P = 638$	Applied Tensile Load for Minimum Margin
$MS_min_V = 326$	Applied Shear Load for Minimum Margin
$MS_min_M = 0$	Applied Bending Moment for Minimum Margin

Bolt Fail-Safe Analysis for Lower Support Ring to Outer Cylinder - EWB0420-4H-7 Bolts

It will be assumed that one bolt will fail. Bolt number 940147 has been removed and only load case 2053 is included in the following fail-safe analysis. There are now 51, EWB0420-4H-7 (200 ksi), 0.25-28 UNJF fasteners, holding the Lower Support Ring to the Outer Cylinder. The drawing number illustrating the Outer Cylinder to the Lower Support Ring is SEG39135776.

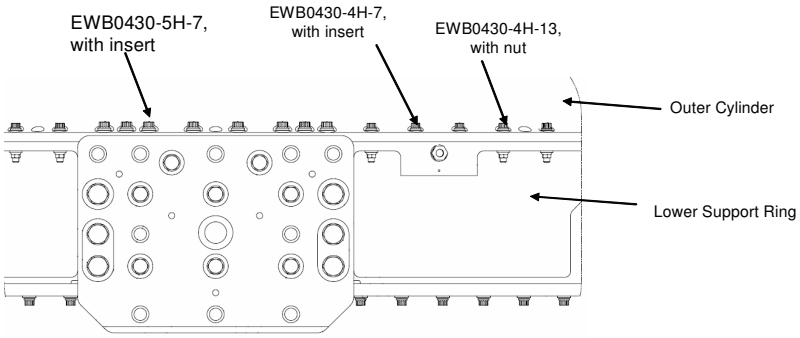

Close View of Vacuum Case Assembly
(Location of fasteners is shown)

Reading database file for bolted interface, abort landing case

Note that ".txt" is generated from NASPOST result (.LIS file) by just removing all words and comments.

$data_fs := READPRN("LSR_OC_LC2053_fs.txt")$

$s := 1 .. rows(data_fs)$

Fail-safe Loads from Loads Model 2-05
Load Case 2053

Applied tensile load $P_FS_s := data_fs_{s,3} \cdot lbf$ $ID_FS_s := data_fs_{s,1}$

Applied shear load $V_FS_s := data_fs_{s,4} \cdot lbf$ $LC_FS_s := data_fs_{s,2}$

Applied bending moment $M_FS_s := data_fs_{s,5} \cdot in \cdot lbf$

Fail-safe Factors of Safety

Ultimate $SFu_FS := 1.0$

Joint Separation $SFsep_FS := 1.0$

This file uses the calculations shown in \\escfil02\2i11_mathcad\8307_bolts\ multi_bolt_stiffness_insert_FS_RevC

Prepared By	Name	Date		File Name
	G. Reyes	04/07/06		LSROC_250_r3.mcd
Checked By	C. Bala		**Engineering and Science Contract Group** *Structural Analysis Section*	Draw ing No. SEG39135776
Title	Bolts from Lower Support Ring to Outer Cylinder			

Bolt Fail-safe Load data

Joint separation load $\max(Psep_FS) = 824.423\ lbf$

Max. load on the bolt(ultimate) $\max(Pb_FS) = 5773.5\ lbf$

Summary of fail-safe Margins for bolt:

Joint separation	$MS_minFS_{1,1} = 2.287$	Total Thread shear Ultimate	$MS_minFS_{5,1} = 0.289$
Direct Tension Ultimate	$MS_minFS_{2,1} = 6.220$	Shear Ultimate	$MS_minFS_{6,1} = 5.13$
Total Tension Ultimate	$MS_minFS_{3,1} = 0.186$	Bending Ultimate	$MS_minFS_{7,1} = 10$
Direct Thread shear Ultimate	$MS_minFS_{4,1} = 6.85$	Combined shear, tension and bending ultimate	$MS_minFS_{8,1} = 0.1839$

Determination of the smallest fail-safe margin of safety for the bolt, and the failure mode:

$MSbolt_FS := \min(MS_FS)$

$MSbolt_FS = 0.184$ Failure_Mode_FS = "Combined Shear Tension Bending Ultimate"

Joint and Load Case Identification:

$MS_min_ID = 940131$	Element Identification and Bolt Number (940131) for Minimum Margin
$MS_min_LC = 2053$	Load Case Number for Minimum Margin
$MS_min_P = 824.4$	Applied Tensile Load for Minimum Margin
$MS_min_V = 394.8$	Applied Shear Load for Minimum Margin
$MS_min_M = 0$	Applied Bending Moment for Minimum Margin

Cont: Bolt Fail-Safe Analysis for Lower Support Ring to Outer Cylinder EWB0420-4H-7 Bolts

An additional fail-safe check will be performed on the EWB0420-4H-7 fasteners. On page 3.10.4.1-12, analysis will be performed on the EWB0420-4H-13 fasteners with the BACN10HR4CS nut. For this case, the minimum margin of safety was determined to be at Bolt Number 940131, with Load Case 2054. Therefore, this check will apply the new loads from Load Case 2054 without Bolt Number 940131 and will show how the Load Case 2054 will affect the EWB0420-4H-7 fasteners when removing a EWB0420-4H-13 fastener.

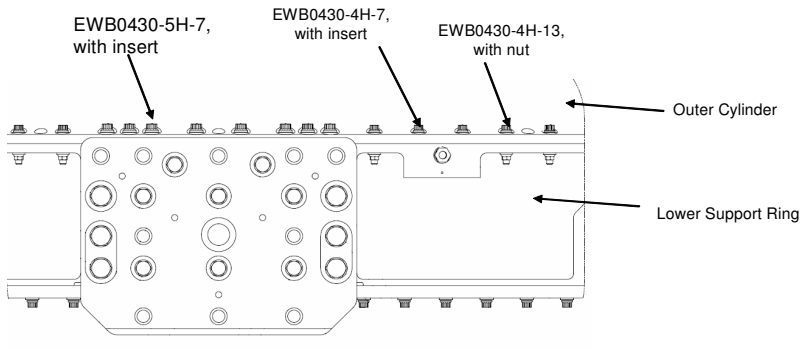

Close View of Vacuum Case Assembly
(Location of fasteners is shown)

Reading database file for bolted interface, abort landing case

Note that ".txt" is generated from NASPOST result (.LIS file) by just removing all words and comments.

$data_fs1 := READPRN("fs_LSR_OC_LC2054_check.txt")$

$z := 1 .. rows(data_fs1)$

Fail-safe Loads from Loads Model 2-05
Load Case 2054

Applied tensile load $P_FS1_z := data_fs1_{z,3} \cdot lbf$ $ID_FS1_z := data_fs1_{z,1}$

Applied shear load $V_FS1_z := data_fs1_{z,4} \cdot lbf$ $LC_FS1_z := data_fs1_{z,2}$

Applied bending moment $M_FS1_z := data_fs1_{z,5} \cdot in \cdot lbf$

Fail-safe Factors of Safety

Ultimate $SFu_FS := 1.0$

Joint Separation $SFsep_FS := 1.0$

This file uses the calculations shown in \\escfil02\2i11_mathcad\8307_bolts\ multi_bolt_stiffness_insert_FS_RevC

Bolt Fail-safe Load data

Joint separation load $\max(Psep_FS) = 636.874\ lbf$

Max. load on the bolt(ultimate) $\max(Pb_FS) = 5742.9\ lbf$

Summary of fail-safe Margins for bolt:

Joint separation	$MS_minFS_{1,1} = 3.255$	Total Thread shear Ultimate	$MS_minFS_{5,1} = 0.295$
Direct Tension Ultimate	$MS_minFS_{2,1} = 8.346$	Shear Ultimate	$MS_minFS_{6,1} = 8.55$
Total Tension Ultimate	$MS_minFS_{3,1} = 0.192$	Bending Ultimate	$MS_minFS_{7,1} = 10$
Direct Thread shear Ultimate	$MS_minFS_{4,1} = 9.16$	Combined shear, tension and bending ultimate	$MS_minFS_{8,1} = 0.1907$

Determination of the smallest fail-safe margin of safety for the bolt, and the failure mode:

$MSbolt_FS := \min(MS_FS1)$

$MSbolt_FS = 0.191$ Failure_Mode_FS = "Combined Shear Tension Bending Ultimate"

Joint and Load Case Identification:

$MS_min_ID = 940147$	Element Identification and Bolt Number (940147) for Minimum Margin
$MS_min_LC = 2054$	Load Case Number for Minimum Margin
$MS_min_P = 636.9$	Applied Tensile Load for Minimum Margin
$MS_min_V = 345.1$	Applied Shear Load for Minimum Margin
$MS_min_M = 0$	Applied Bending Moment for Minimum Margin

CHECK BOLTS (EWB0420-4H-13 0.25"-28 UNJF-3A, Material-A-286), Nut BACN10HR4CS, Washer NAS1587-4C, Washer NAS1149E0463R

Reading database file for bolted interface, abort landing case

Note that ".txt" is generated from NASPOST result (.LIS file) by just removing all words and comments. The following bolt analysis will analyze the EWB0420-4H-13 (200 ksi), 0.25-28 UNJF fasteners. There is a total of 116, EWB 0420-4H-13, fasteners used to attach the Lower Support Ring to the Outer Cylinder. A total of 6 load cases (2019, 2020, 2031, 2032, 2053, 2054) are included in the NASPOST run. Note that this bolted interface was checked for minimum margins of safety for launch, nominal landing, and abort landing load cases. The abort landing case combined with abort landing temperature data resulted in the lowest minimum margins of safety. Therefore, the abort landing case is used in this analysis.

$data := READPRN("LSR_OC_250nut_abortland.txt")$

$s := 1..rows(data)$

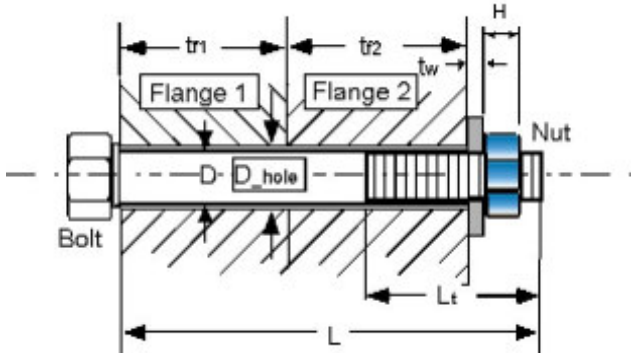

Flange 1: Outer Cylinder
Part number: SDG39135779-001
Material: 7050-T7451, AMS 4108

Flange 2: Lower Support Ring
Part number: SEG39135787-301
Material: 7050-T7451, AMS 4108

Loads

Applied tensile load $P_s := data_{s,3} \cdot lbf$ $ID_s := data_{s,1}$

Applied shear load $V_s := data_{s,4} \cdot lbf$ $LC_s := data_{s,2}$

Applied bending moment $M_s := data_{s,5} \cdot in \cdot lbf$

Factors of Safety

Ultimate $SFu := 1.4$ Yield $SFy := 1.1$

Joint Separation $SFsep := 1.2$ Fitting factor $FF := 1.15$

Temperature data (Ref Appendix C2), Abort Landing Case

Assembly $Temp_initial := 70 \cdot deg$

Maximum $Temp_max := 150 \cdot deg$

Minimum $Temp_min := 40 \cdot deg$

Bolt and Nut Data

Nominal diameter of bolt $D := .250 \cdot in$ Number of threads/inch $Nt := 28 \cdot \frac{1}{in}$

Total length of bolt $L := 1.2995 \cdot in$ Height of nut $H := 0.280 \cdot in$

Threaded length $Lt := 0.487 \cdot in$ (If bolt is fully threaded, input Lt = L)

This file uses the calculations shown in \\escfil02\2i11_mathcad\8307_bolts\thread_data.mcd

Washer Data

Thickness of washers $tw := 0.141 \cdot in$

(Includes thickness of NAS1587-4C and NAS1149E0463R)

Outer Diameter of washer $Dw := 0.531in$

Inner Diameter of washer $Dwi := 0.252 \cdot in$

Flange data

Thickness of flange 1 (SEG39135779-001) $tf1 := .375 \cdot in$

Thickness of flange 2 (SDG39135785-001) $tf2 := .375in$

Diameter of hole (SEG39135779-001) $D_hole := 0.289 \cdot in$

Bolt head dia. across flats $dw := 0.433 \cdot in$ (used only if there is no washer)

Note: If there is no washer tw, Dw and Dwi should be zero

Material Property Data

Bolt

Temperature correction factor for bolt strength ultimate. (Ref. MIL-HDBK-5J, fig. 6.2.1.1.1) $TSu_bolt := 0.97$ Yield $TSy_bolt := 0.97$

Bolt ultimate tensile allowable stress $Ftu_bolt := 200000 \cdot psi$ (EWB 0420)

Bolt ultimate shear allowable stress $Fsu_bolt := 0.6 \cdot Ftu_bolt$

Bolt yield Tensile allowable stress $Fty_bolt := 180000 \cdot psi$ (AMS 5726C)

Temperature correction factor for bolt modulus $TE_bolt := 0.98$ (Ref. MIL-HDBK-5J, fig. 6.2.1.1.4(a))

Modulus of elasticity of bolt $E_bolt := \left(29.1 \cdot 10^{6} \cdot psi\right)$ (Ref. MIL-HDBK-5J, table 6.2.1.0(b))

Thermal coefficient for bolt (Ref. MIL-HDBK-5J, fig. 6.2.1.0) $\beta_bolt_hot := 9.1 \cdot 10^{-6} \cdot \frac{\frac{in}{in}}{deg}$ $\beta_bolt_cold := 8.9 \cdot 10^{-6} \cdot \frac{\frac{in}{in}}{deg}$

Nut

Temperature correction factor for nut strength $TS_nut := 0.97$

Ultimate tensile allowable stress $Ftu_nut := 220000 \cdot psi$ (Ref. BACN10HR)

Ultimate Shear allowable stress: $Fsu_nut := 0.6 \cdot Ftu_nut$

Ultimate axial strength of nut $Ptu_nut := 7973 \cdot lbf$ (220/125=1.76, 4530*1.76=7973, Ref. NAS1291)

Washer

Temperature correction factor for washer modulus $TE_washer := .97$

Modulus of elasticity of washer: $E_washer := \left(29.1 \cdot 10^{6} \cdot psi\right)$

Flanges

Stiffness of the joint depends upon number of members in the grip of the fasteners,
Modulus of elasticity of these members, and diameters of the bolt and the washer.

Temperature correction factor for flange 1 $Tf1E := .98$ (modulus) (Ref. MIL-HDBK-5J, fig. 3.7.6.1.4 and Appendix C9)

Temperature correction factor for flange 2 $Tf2E := .98$

Modulus of elasticity for the parts in the joint $E_flange1 := \left(10.3 \cdot 10^{6} \cdot psi\right)$ $E_flange2 := \left(10.3 \cdot 10^{6} \cdot psi\right)$

(Ref. MIL-HDBK-5J, table 3.7.4.0(d))

Coefficient of thermal expansion for flanges $\beta_flange1_hot := 12.8 \cdot 10^{-6} \cdot \frac{\frac{in}{in}}{deg}$ $\beta_flange2_hot := 12.8 \cdot 10^{-6} \cdot \frac{\frac{in}{in}}{deg}$

(Ref. MIL-HDBK-5J, table 3.7.4.0(d) and Appendix C9)

$\beta_flange1_cold := 12.1 \cdot 10^{-6} \cdot \frac{\frac{in}{in}}{deg}$ $\beta_flange2_cold := 12.1 \cdot 10^{-6} \cdot \frac{\frac{in}{in}}{deg}$

Torque/Preload data

Maximum torque (65% of yield) $Tmax := 160 \cdot in \cdot lbf$

Minimum torque (95% of max. torque) $Tmin := 152 in \cdot lbf$

Torque coefficient $k := 0.15$

Loading plane factor $n := 0.5$

Preload Uncertainty $u := 0.25$

This file uses the calculations shown in \\escfil02\2i11_mathcad\8307_bolts\multi_bolt_stiffness_nut_RevC

Prepared By	Name	Date		File Name
	G. Reyes	04/07/06	Engineering and Science Contract Group	LSROC_250_r3.mcd
Checked By	C. Bala		*Structural Analysis Section*	Drawing No. SEG39135776
Title	Bolts from Lower Support Ring to Outer Cylinder			

Bolt Load data

Bolt/joint stiffness factor	$= 0.28$	Preload due to temperature	$Pthr_pos = 242.6\,lbf$
Max. preload	$PLDmax = 5576\,lbf$		$Pthr_neg = -78.7\,lbf$
Min. preload	$PLDmin = 2694.6\,lbf$	Uncertainty factor	$u = 0.25$
Joint separation load	$max(Psep) = 1057.2\,lbf$	Torque coefficient	$k = 0.15$
Max. load on the bolt(ultimate)	$max(Pb) = 5774.8\,lbf$	Loading plane factor	$n = 0.5$
Max. load on the bolt(yield)	$max(Pby) = 5732.2\,lbf$	Thread pullout strength required to develop full strength of bolt	$PAs = 8213.8\,lbf$
Bolt ultimate tensile strength	$PAt = 6844.9\,lbf$	Nut ultimate tensile strength	$Ptu_nut = 7733.8\,lbf$

Length_check = "Bolt length is sufficient"

Summary of Margins for bolt:

Joint separation	$MS_min_{1,1} = 1.578$	Direct Thread shear Ultimate	$MS_min_{6,1} = 4.791$
Direct Tension Ultimate	$MS_min_{2,1} = 3.826$	Total Thread shear Ultimate	$MS_min_{7,1} = 0.422$
Direct Tension Yield	$MS_min_{3,1} = 4.528$	Shear Ultimate	$MS_min_{8,1} = 6.29$
Total Tension Ultimate	$MS_min_{4,1} = 0.185$	Bending Ultimate	$MS_min_{9,1} = 10$
Total Tension Yield	$MS_min_{5,1} = 0.075$	Combined shear, tension and bending ultimate	$MS_min_{10,1} = 0.184$

Determination of the smallest margin of safety for the bolt, and the failure mode:

$MSbolt := min(MS)$

$MSbolt = 0.075$ Minimum Margin of Safety

Failure_Mode = "Total Tension Yield"

$MS_min_ID = 940131$	Element Identification and Bolt Number (940131) for Minimum Margin
$MS_min_LC = 2054$	Load Case Number for Minimum Margin
$MS_min_P = 881$	Applied Tensile Load for Minimum Margin
$MS_min_V = 422$	Applied Shear Load for Minimum Margin
$MS_min_M = 0$	Applied Bending Moment for Minimum Margin

Bolt Fail-Safe Analysis for Lower Support Ring to Outer Cylinder - EWB0420-4H-13 Bolts

It will be assumed that one bolt will fail. Bolt number 940131 has been removed and only load case 2054 is included in the following fail-safe analysis. There are now 115, EWB0420-4H-13 (200 ksi), 0.25-28 UNJF fasteners, holding the Lower Support Ring to the Outer Cylinder. The drawing number illustrating the Outer Cylinder to the Lower Support Ring is SEG39135776.

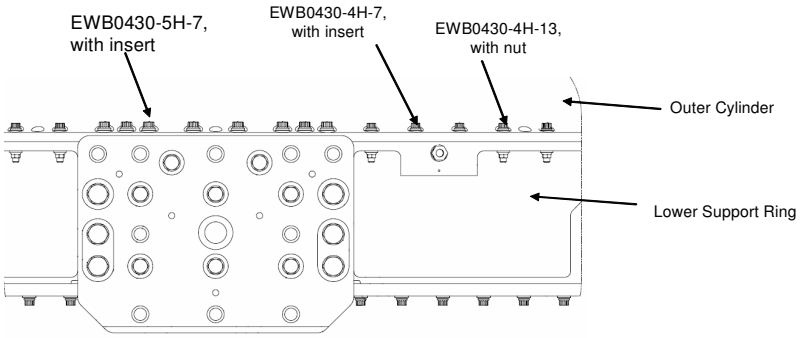

Close View of Vacuum Case Assembly
(Location of fasteners is shown)

Reading database file for bolted interface, abort landing case

Note that ".txt" is generated from NASPOST result (.LIS file) by just removing all words and comments.

$data_fs := READPRN("LSR_OC_LC2054_fs.txt")$

$s := 1 .. rows(data_fs)$

Fail-safe Loads from Loads Model 2-05
Load Case 2054

Applied tensile load $P_FS_s := data_fs_{s,3} \cdot lbf$ $ID_FS_s := data_fs_{s,1}$

Applied shear load $V_FS_s := data_fs_{s,4} \cdot lbf$ $LC_FS_s := data_fs_{s,2}$

Applied bending moment $M_FS_s := data_fs_{s,5} \cdot in \cdot lbf$

Fail-safe Factors of Safety

Ultimate $SFu_FS := 1.0$

Joint Separation $SFsep_FS := 1.0$

This file uses the calculations shown in \\escfil02\2i11_mathcad\8307_bolts\ multi_bolt_stiffness_nut_FS_RevC

Bolt Fail-safe Load data

Joint separation load $\max(Psep_FS) = 1137.236\,lbf$

Max. load on the bolt(ultimate) $\max(Pb_FS) = 5759.3\,lbf$

Summary of fail-safe Margins for bolt:

Joint separation	$MS_minFS_{1,1} = 1.396$	Total Thread shear Ultimate	$MS_minFS_{5,1} = 0.426$
Direct Tension Ultimate	$MS_minFS_{2,1} = 4.234$	Shear Ultimate	$MS_minFS_{6,1} = 7.43$
Total Tension Ultimate	$MS_minFS_{3,1} = 0.188$	Bending Ultimate	$MS_minFS_{7,1} = 10$
Direct Thread shear Ultimate	$MS_minFS_{4,1} = 5.28$	Combined shear, tension and bending ultimate	$MS_minFS_{8,1} = 0.1880$

Determination of the smallest fail-safe margin of safety for the bolt, and the failure mode:

$MSbolt_FS := \min(MS_FS)$

$MSbolt_FS = 0.188$ Failure_Mode_FS = "Combined Shear Tension Bending Ultimate"

Joint and Load Case Identification:

$MS_min_ID = 940132$	Element Identification and Bolt Number (940132) for Minimum Margin
$MS_min_LC = 2054$	Load Case Number for Minimum Margin
$MS_min_P = 1137.2$	Applied Tensile Load for Minimum Margin
$MS_min_V = 403.1$	Applied Shear Load for Minimum Margin
$MS_min_M = 0$	Applied Bending Moment for Minimum Margin

Cont: Bolt Fail-Safe Analysis for Lower Support Ring to Outer Cylinder EWB0420-4H-13 Bolts

An additional fail-safe check will be performed on the EWB0420-4H-13 fasteners. On page 3.10.4.1-4, analysis was performed on the EWB0420-4H-7 fasteners with the MS51830CA202L insert. For this case, the minimum margin of safety was determined to be at Bolt Number 940147, with Load Case 2053. Therefore, this check will apply the new loads from Load Case 2053 without Bolt Number 940147 and will show how the Load Case 2053 will affect the EWB0420-4H-13 fasteners when removing a EWB0420-4H-7 fastener.

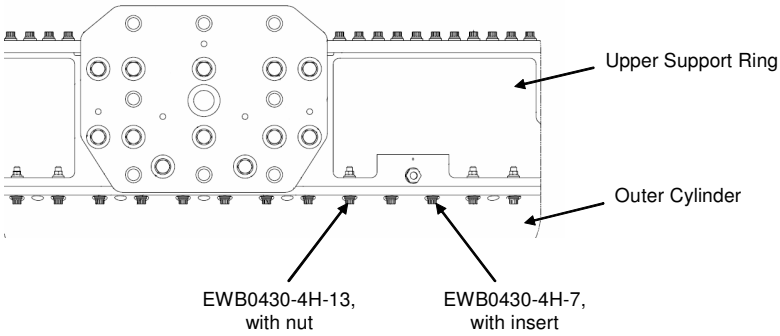

Close View of Vacuum Case Assembly
(Location of fasteners is shown)

Reading database file for bolted interface, abort landing case

Note that ".txt" is generated from NASPOST result (.LIS file) by just removing all words and comments.

$data_fs2 := READPRN("fs_LSR_OC_LC2053_check.txt")$

$x := 1 .. rows(data_fs2)$

Fail-safe Loads from Loads Model 2-05
Load Case 2053

Applied tensile load $P_FS2_x := data_fs2_{x,3} \cdot lbf$ $ID_FS2_x := data_fs2_{x,1}$

Applied shear load $V_FS2_x := data_fs2_{x,4} \cdot lbf$ $LC_FS2_x := data_fs2_{x,2}$

Applied bending moment $M_FS2_x := data_fs2_{x,5} \cdot in \cdot lbf$

Fail-safe Factors of Safety

Ultimate $SFu_FS := 1.0$

Joint Separation $SFsep_FS := 1.0$

This file uses the calculations shown in \\escfil02\2i11_mathcad\8307_bolts\ multi_bolt_stiffness_nut_FS_RevC

Bolt Fail-safe Load data

Joint separation load $\max(Psep_FS) = 824.423\ lbf$

Max. load on the bolt(ultimate) $\max(Pb_FS) = 5708.9\ lbf$

Summary of fail-safe Margins for bolt:

Joint separation	$MS_minFS_{1,1} = 2.306$	Total Thread shear Ultimate	$MS_minFS_{5,1} = 0.439$
Direct Tension Ultimate	$MS_minFS_{2,1} = 6.220$	Shear Ultimate	$MS_minFS_{6,1} = 8.76$
Total Tension Ultimate	$MS_minFS_{3,1} = 0.199$	Bending Ultimate	$MS_minFS_{7,1} = 10$
Direct Thread shear Ultimate	$MS_minFS_{4,1} = 7.66$	Combined shear, tension and bending ultimate	$MS_minFS_{8,1} = 0.1985$

Determination of the smallest fail-safe margin of safety for the bolt, and the failure mode:

$MSbolt_FS := \min(MS_FS2)$

$MSbolt_FS = 0.198$ Failure_Mode_FS = "Combined Shear Tension Bending Ultimate"

Joint and Load Case Identification:

$MS_min_ID = 940131$	Element Identification and Bolt Number (940131) for Minimum Margin
$MS_min_LC = 2053$	Load Case Number for Minimum Margin
$MS_min_P = 824.4$	Applied Tensile Load for Minimum Margin
$MS_min_V = 394.8$	Applied Shear Load for Minimum Margin
$MS_min_M = 0$	Applied Bending Moment for Minimum Margin

3.10.4.2 Lower Support Ring to Outer Cylinder - .3125"

Lower Support Ring to Outer Cylinder Bolt Analysis

In the Vacuum Case Assembly, the Lower Support Ring is installed on the Outer Cylinder. Three separate sets of fasteners are used to attach the Lower Support Ring to the Outer Cylinder. The fasteners are EWB0420-5H-7 (200 ksi, 0.3125-24 UNJF), EWB 0420-4H-7 (200 ksi, 0.25-28 UNJF), and EWB 0420-4H-13 (200 ksi, 0.25-28 UNJF). A total of 200 fasteners are used to attach the Lower Support Ring to the Outer Cylinder. The three sets of fasteners will be analyzed separately. This section will only analyze the EWB0420-5H-7 fasteners. Refer to Section 3.10.4.1 for bolt analysis of fasteners EWB 0420-4H-7 and EWB 0420-4H-13. The drawing number illustrating the Lower Support Ring to the Outer Cylinder is SEG39135776.

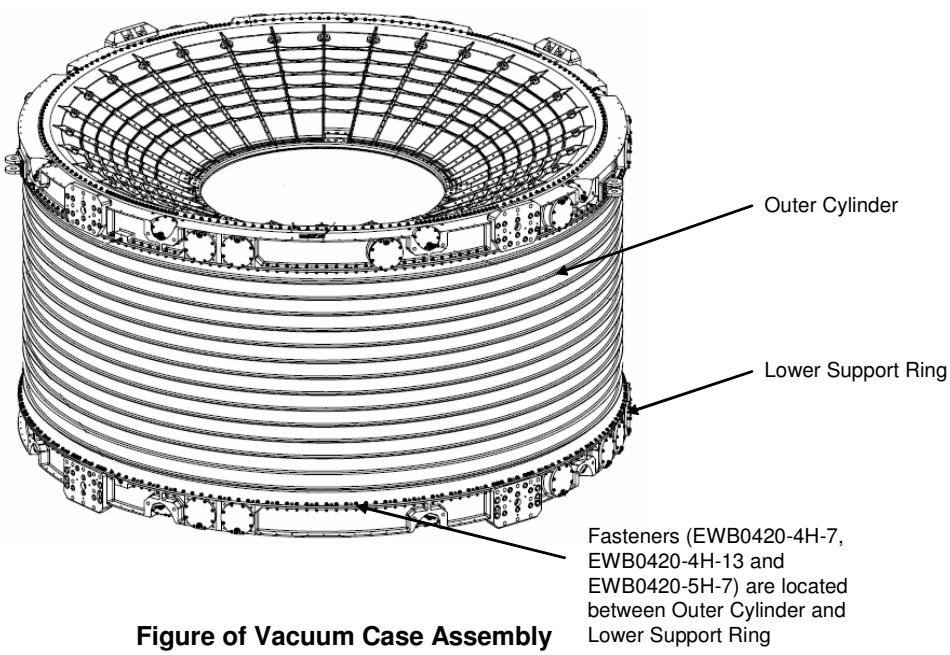

Figure of Vacuum Case Assembly

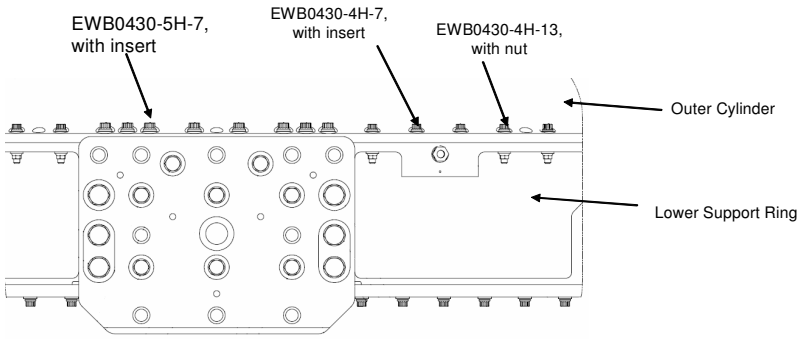

Close View of Vacuum Case Assembly
(Location of fasteners is shown)

Loads model 2-05 was used to retrieve loads at the bolted interfaces. The CBUSH elements were post processed in NASPOST for forces and moments. The CBUSH element identification numbers are 940001-940200. The following table shows the CBUSH element identification numbers corresponding to the appropriate fasteners. A linear gap model was ran for a total of 6 load cases. The load cases include 2019-2020, 2031-2032, 2053-2054 and are all included in the NASPOST run. Note that this bolted interface was checked for minimum margins of safety for launch, nominal landing, and abort landing load cases. The abort landing case combined with abort landing temperature data resulted in the lowest minimum margins of safety. Therefore, the abort landing case is used in this analysis.

CBUSH Element ID's for EWB0420-5H-7	CBUSH Element ID's for EWB0420-4H-7	CBUSH Element ID's for EWB0420-4H-13
940022 THRU 940027	940009 THRU 940011	940001 THRU 940008
940070 THRU 940075	940019 THRU 940020	940012 THRU 940018
940118 THRU 940123	940042 THRU 940044	940021
940166 THRU 940170	940047 THRU 940049	940028 THRU 940041
940193 THRU 940200	940051 THRU 940059	940045 THRU 940046
	940065 THRU 940067	940050
	940100 THRU 940108	940060 THRU 940064
	940115 THRU 940116	940068 THRU 940069
	940147 THRU 940155	940076 THRU 940099
	940161 THRU 940163	940109 THRU 940114
	940173 THRU 940175	940117
	940182 THRU 940184	940124 THRU 940146
		940156 THRU 940160
		940164 THRU 940165
		940171 THRU 940172
		940176 THRU 940181
		940185 THRU 940192

CHECK BOLTS (EWB0420-5H-7 0.3125"-24 UNJF-3A, Material-A-286), Insert NASM21209F5-20L, Washer NAS1587-5C

Reading database file for bolted interface, abort landing case

Note that ".txt" is generated from NASPOST result (.LIS file) by just removing all words and comments. The following bolt analysis will analyze the EWB0420-5H-7 (200 ksi), 0.3125-24 UNJF fasteners. There is a total of 32, EWB0420-5H-7, fasteners used to attach the Lower Support Ring to the Outer Cylinder.

$data := READPRN("LSR_OC_3125int_abortland.txt")$

$s := 1..rows(data)$

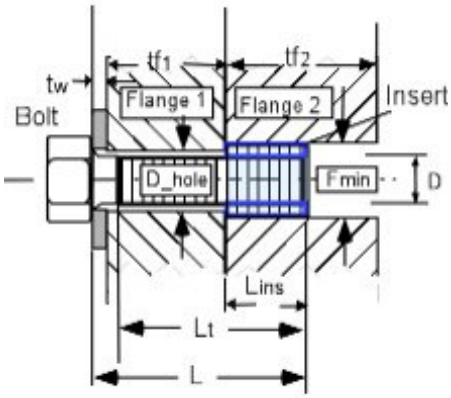

Flange 1: Outer Cylinder
Part number: SDG39135779-001
Material: 7050-T7451, AMS 4108

Flange 2: Lower Support Ring
Part number: SEG39135787-301
Material: 7050-T7451, AMS 4108

Loads

Applied tensile load $P_s := data_{s,3} \cdot lbf$ $ID_s := data_{s,1}$

Applied shear load $V_s := data_{s,4} \cdot lbf$ $LC_s := data_{s,2}$

Applied bending moment $M_s := data_{s,5} \cdot in \cdot lbf$

Factors of Safety

Ultimate $SFu := 1.4$ Yield $SFy := 1.1$

Joint Separation $SFsep := 1.2$ Fitting factor $FF := 1.15$

Temperature data (Ref Appendix C2), Abort Landing Case

Assembly $Temp_initial := 70 \cdot deg$

Maximum $Temp_max := 150 \cdot deg$

Minimum $Temp_min := 40 \cdot deg$

Bolt and Insert Data

Nominal diameter of bolt $D := 0.3125 \cdot in$ Number of threads/inch $Nt := 24 \cdot \frac{1}{in}$

Total length of bolt $L := 1.0245 \cdot in$ Length of insert $Lins := 0.625 \cdot in$

Threaded length $Lt := 0.587 \cdot in$ Min. external diameter of insert $Fmin := 0.380 \cdot in$

(If bolt is fully threaded, input Lt = L) Depth of recess for insert $lr := 0.02 \cdot in$

This file uses the calculations shown in \\escfil02\2i11_mathcad\8307_bolts\thread_data.mcd

Washer Data

Thickness of washer $tw := 0.078 \cdot in$

Outer Diameter of washer $Dw := .593in$

Inner Diameter of washer $Dwi := 0.315 \cdot in$

Flange data

Thickness of flange 1 (Ref. SDG39135779-001) $tf1 := .375 \cdot in$

Thickness of flange 2 $tf2 := .625in$ (Length of insert)

Diameter of hole (Ref. SDG39135779-001) $D_hole := 0.357 \cdot in$

Bolt head dia. across flats $dw := 0.526 \cdot in$ (used only if there is no washer)

Note: If there is no washer, tw, Dw, and Dwi should be zero.

Material Property Data

Bolt

Temperature correction factor for bolt strength ultimate (Ref. MIL-HDBK-5J, fig. 6.2.1.1.1) $TSu_bolt := .97$ yield $TSy_bolt := .97$

Bolt ultimate tensile allowable stress $Ftu_bolt := 200000 \cdot psi$ (EWB 0420)

Bolt ultimate shear allowable stress $Fsu_bolt := 0.6 \cdot Ftu_bolt$

Bolt yield tensile allowable $Fty_bolt := 180000 \cdot psi$ (AMS 5726C)

Temperature correction factor for bolt modulus $TE_bolt := .98$ (Ref. MIL-HDBK-5J, fig. 6.2.1.1.4(a))

Modulus of elasticity of bolt $E_bolt := \left(29.1 \cdot 10^{6} \cdot psi\right)$ (Ref. MIL-HDBK-5J, table 6.2.1.0(b))

Thermal coefficient for bolt: $\beta_bolt_hot := 9.1 \cdot 10^{-6} \cdot \frac{\frac{in}{in}}{deg}$ $\beta_bolt_cold := 8.9 \cdot 10^{-6} \cdot \frac{\frac{in}{in}}{deg}$

(Ref. MIL-HDBK-5J, fig. 6.2.1.0)

Insert

Temperature correction factor for insert strength $TS_ins := .97$ (Ref. MIL-HDBK-5J, fig. 6.2.1.1.1)

Ultimate tensile allowable stress $Ftu_ins := 140000 \cdot psi$ (Ref. NASM21209)

Ultimate shear allowable stress $Fsu_ins := 0.6 \cdot Ftu_ins$

Washer

Temperature correction factor for washer modulus $TE_washer := .97$ (Ref. MIL-HDBK-5J, fig. 6.2.1.1.1)

Modulus of elasticity of washer $E_washer := \left(29.1 \cdot 10^{6} \cdot psi\right)$ (Ref. MIL-HDBK-5J, table 6.2.1.0(b))

Flanges

Stiffness of the joint depends upon number of members in the grip of the fasteners,
Modulus of elasticity of these members, and diameters of the bolt and the washer.

Temperature correction factor for flange 1 $Tf1E := .98$ (modulus) (Ref. MIL-HDBK-5J, fig. 3.7.6.1.4 and Appendix C9)

Temperature correction factor for flange 2 $Tf2E := .98$ (modulus)

$Tf2s := .97$ (strength) (Ref. MIL-HDBK-5J, fig. 3.7.4.2.1)

Shear strength allowable for flanges $Fsu_f2 := 42000 \cdot psi$ (Ref. MIL-HDBK-5J, table 3.7.4.0(d))

Modulus of elasticity for the parts in the joint $E_flange1 := \left(10.3 \cdot 10^{6} \cdot psi\right)$ $E_flange2 := \left(10.3 \cdot 10^{6} \cdot psi\right)$

(Ref. MIL-HDBK-5J, table 3.7.4.0(d))

Coefficient of thermal expansion for flanges $\beta_flange1_hot := 12.8 \cdot 10^{-6} \cdot \frac{\frac{in}{in}}{deg}$ $\beta_flange2_hot := 12.8 \cdot 10^{-6} \cdot \frac{\frac{in}{in}}{deg}$

(Ref. MIL-HDBK-5J, table 3.7.4.0(d) and Appendix C9)

$\beta_flange1_cold := 12.1 \cdot 10^{-6} \cdot \frac{\frac{in}{in}}{deg}$ $\beta_flange2_cold := 12.1 \cdot 10^{-6} \cdot \frac{\frac{in}{in}}{deg}$

Torque/Preload data

Maximum torque (65% of yield) $Tmax := 318.09 \cdot in \cdot lbf$

Minimum torque (95% of max. torque) $Tmin := 302.2 \cdot in \cdot lbf$

Torque coefficient: $k := 0.15$

Loading plane factor: $n := .5$

Preload Uncertainty: $u := 0.25$

This file uses the calculations shown in \\escfil02\2i11_mathcad\8307_bolts\multi_bolt_stiffness_insert_RevC

Insert Stiffness File

Prepared By	Name	Date		File Name
	G. Reyes	04/07/06	Engineering and Science Contract Group	LSROC_3125int_r3.mcd
Checked By	C. Bala		*Structural Analysis Section*	Drawing No. SEG39135776
Title	Bolts from Lower Support Ring to Outer Cylinder			

Bolt Load data

Bolt/joint stiffness factor $= 0.341$

Max. preload $PLDmax = 8952.1\,lbf$

Min. preload $PLDmin = 4258.7\,lbf$

Joint separation load $max(Psep) = 585.6\,lbf$

Max. load on the bolt(ultimate) $max(Pb) = 9086\,lbf$

Max. load on the bolt(yield) $max(Pby) = 9057.3\,lbf$

Bolt ultimate tensile strength $PAt = 10965.6\,lbf$

Preload due to temperature $Pthr_pos = 469.7\,lbf$

$Pthr_neg = -152.3\,lbf$

Uncertainty factor $u = 0.25$

Torque coefficient $k = 0.15$

Loading plane factor $n = 0.5$

Thread shear pullout load of bolt or insert $Pths = 20145.1\,lbf$

Thread shear pullout load in parent metal $Ppths = 15198.6\,lbf$

Length_check = "Bolt length is sufficient"

Summary of Margins for bolt:

Joint separation	$MS_min_{1,1} = 6.623$	Direct Thread shear Ultimate	$MS_min_{6,1} = 18.345$
Direct Tension Ultimate	$MS_min_{2,1} = 12.957$	Total Thread shear Ultimate	$MS_min_{7,1} = 0.673$
Direct Tension Yield	$MS_min_{3,1} = 14.987$	Shear Ultimate	$MS_min_{8,1} = 3.15$
Total Tension Ultimate	$MS_min_{4,1} = 0.207$	Bending Ultimate	$MS_min_{9,1} = 10$
Total Tension Yield	$MS_min_{5,1} = 0.090$	Combined shear, tension and bending ultimate	$MS_min_{10,1} = 0.202$

Determination of the smallest margin of safety for the bolt, and the failure mode:

$MSbolt := min(MS)$

$MSbolt = 0.09$ Minimum Margin of Safety

Failure_Mode = "Total Tension Yield"

$MS_min_ID = 940025$ Element Identification and Bolt Number (940025) for Minimum Margin

$MS_min_LC = 2031$ Load Case Number for Minimum Margin

$MS_min_P = 488$ Applied Tensile Load for Minimum Margin

$MS_min_V = 291$ Applied Shear Load for Minimum Margin

$MS_min_M = 0$ Applied Bending Moment for Minimum Margin

Bolt Fail-Safe Analysis for Lower Support Ring to Outer Cylinder - EWB0420-5H-7 Bolts

It will be assumed that one bolt will fail. Bolt number 940025 has been removed and only load case 2031 is included in the following fail-safe analysis. There are now 31, EWB0420-5H-7 (200 ksi), 0.3125-24 UNJF fasteners, holding the Lower Support Ring to the Outer Cylinder. The drawing number illustrating the Outer Cylinder to the Lower Support Ring is SEG39135776.

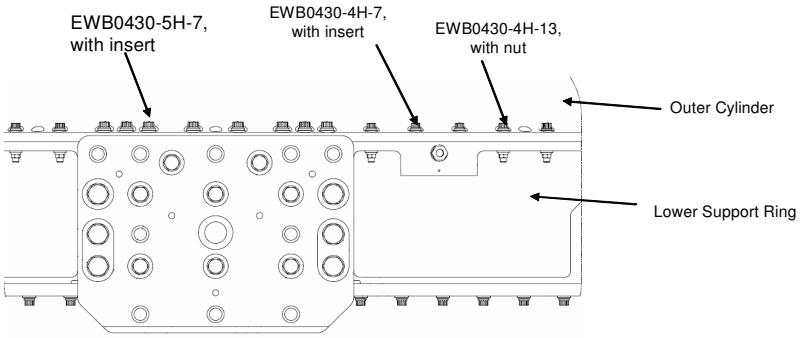

Close View of Vacuum Case Assembly
(Location of fasteners is shown)

Reading database file for bolted interface, abort landing case

Note that ".txt" is generated from NASPOST result (.LIS file) by just removing all words and comments.

$data_fs := READPRN("LSR_OC_LC2031_fs.txt")$

$s := 1 .. rows(data_fs)$

Fail-safe Loads from Loads Model 2-05
Load Case 2031

Applied tensile load $P_FS_s := data_fs_{s,3} \cdot lbf$ $ID_FS_s := data_fs_{s,1}$

Applied shear load $V_FS_s := data_fs_{s,4} \cdot lbf$ $LC_FS_s := data_fs_{s,2}$

Applied bending moment $M_FS_s := data_fs_{s,5} \cdot in \cdot lbf$

Fail-safe Factors of Safety

Ultimate $SFu_FS := 1.0$

Joint Separation $SFsep_FS := 1.0$

This file uses the calculations shown in \\escfil02\2i11_mathcad\8307_bolts\ multi_bolt_stiffness_insert_FS_RevC

Prepared By	Name	Date		File Name
	G. Reyes	04/07/06	Engineering and Science Contract Group	LSROC_3125int_r3.mcd
Checked By	C. Bala		*Structural Analysis Section*	Draw ing No. SEG39135776
Title	Bolts from Lower Support Ring to Outer Cylinder			

Bolt Fail-safe Load data

Joint separation load $\max(Psep_FS) = 792.577\ lbf$

Max. load on the bolt(ultimate) $\max(Pb_FS) = 9107.5\ lbf$

Summary of fail-safe Margins for bolt:

Joint separation	$MS_minFS_{1,1} = 4.633$	Total Thread shear Ultimate	$MS_minFS_{5,1} = 0.669$
Direct Tension Ultimate	$MS_minFS_{2,1} = 10.000$	Shear Ultimate	$MS_minFS_{6,1} = 5.11$
Total Tension Ultimate	$MS_minFS_{3,1} = 0.204$	Bending Ultimate	$MS_minFS_{7,1} = 10$
Direct Thread shear Ultimate	$MS_minFS_{4,1} = 10$	Combined shear, tension and bending ultimate	$MS_minFS_{8,1} = 0.2033$

Determination of the smallest fail-safe margin of safety for the bolt, and the failure mode:

$MSbolt_FS := \min(MS_FS)$

$MSbolt_FS = 0.203$ Failure_Mode_FS = "Combined Shear Tension Bending Ultimate"

Joint and Load Case Identification:

$MS_min_ID = 940035$	Element Identification and Bolt Number (940035) for Minimum Margin
$MS_min_LC = 2031$	Load Case Number for Minimum Margin
$MS_min_P = 792.6$	Applied Tensile Load for Minimum Margin
$MS_min_V = 458.2$	Applied Shear Load for Minimum Margin
$MS_min_M = 0$	Applied Bending Moment for Minimum Margin

3.10.5 Clevis Plate to Upper Support Ring

Clevis Plate to Upper Support Ring Bolt Analysis

Two clevis plates will be installed in the Vacuum Case assembly. There are a total of 6 fasteners attaching the Clevis Plate to the Upper Support Ring. The fasteners are NAS1958C9 (180 ksi), 0.50-20 UNJF. The drawing number illustrating the Clevis Plate to the Upper Support Ring is SEG39135776.

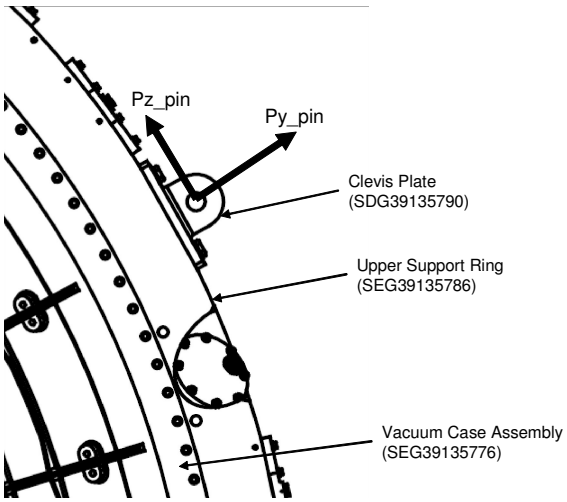

Top View of Vacuum Case Assembly

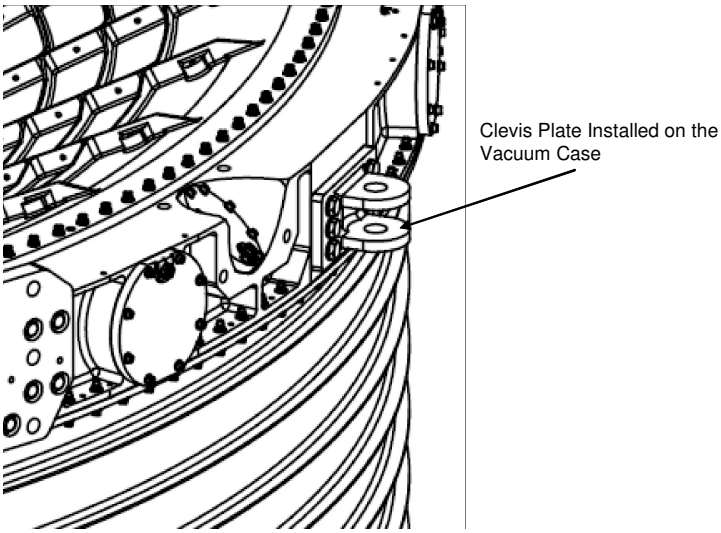

Side View of Vacuum Case Assembly

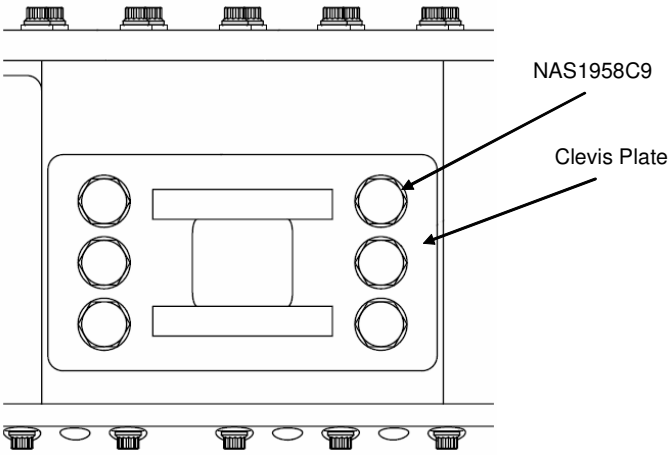

Clevis Plate to Upper Support Ring Bolt Pattern

Loads model 2-04 was used to retrieve loads at the two bolted interfaces. Refer to Appendix A12 for NASPOST results. Note that this joint was checked for minimum margins of safety for launch, nominal landing, and abort landing load cases. The launch case combined with launch temperature data resulted in the lowest minimum margins of safety. Therefore, the launch case is used in this analysis.

Prepared By	Name	Date		File Name
	G. Reyes	02/23/06		CP_USR_r3.mcd
Checked By	C. Bala		**Engineering and Science Contract Group** *Structural Analysis Section*	Draw ing No. SEG39135776
Title	Bolts from Clevis Plate to Upper Support Ring			

Lug analysis was performed to calculate the axial and transverse loads. The complete lug analysis analysis can be found in Section 3.8. Note that the load obtained from loads model 2-04 is a compressive load.

Angle of applied force: $\beta := [90 - (110.3078 - 90)] \cdot deg$ $\beta = 69.692 \cdot deg$

Applied force: $f := 34052.77 \cdot lbf$ (Obtained from loads model 2-04, Launch Case)

Axial load is: $Py_lug := \frac{f}{2} \cdot \cos(\beta)$

$Py_lug = 5909 \cdot lbf$

Transverse load is: $Pz_lug := \frac{f}{2} \cdot \sin(\beta)$

$Pz_lug = 15968 \cdot lbf$

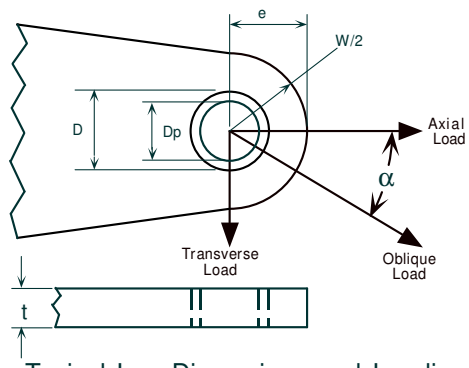

Typical Lug Dimensions and Loading

The following are the loads on the clevis pin. Section 2.1.14.2 includes a complete analysis of the clevis pin for the Clevis Plate.

Axial load on section $Py_pin := 2 \cdot Py_lug$ $Py_pin = 11818 \cdot lbf$

Transverse load on section $Pz_pin := 2 \cdot Pz_lug$ $Pz_pin = 31936 \cdot lbf$

Prepared By	Name	Date		File Name
	G. Reyes	02/23/06		CP_USR_r3.mcd
Checked By			**Engineering and Science Contract Group**	Draw ing No.
	C. Bala		*Structural Analysis Section*	SEG39135776
Title	Bolts from Clevis Plate to Upper Support Ring			

Forces at the Bolts:

Distance from pin to base $dy1 := 1.745 \cdot in$

Distance between bolts: $dz1 := 4.625 \cdot in$

Resultant moment at end of base $Mbase := Pz_pin \cdot dy1$ $\quad Mbase = 55729 \cdot in \cdot lbf$

Bolt tensile force $P := \frac{Mbase}{3 \cdot dz1} + \frac{Py_pin}{6}$ $\quad P = 5986 \cdot lbf$

Bolt shear force $V := \frac{Pz_pin}{6}$ $\quad V = 5323 \cdot lbf$

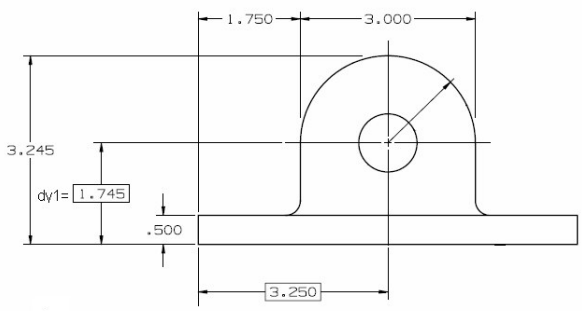

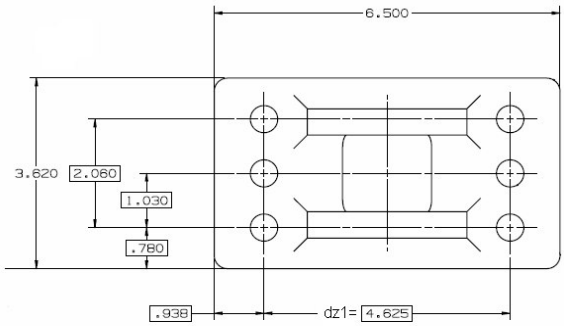

Prepared By	Name	Date	Engineering and Science Contract Group	File Name
	G. Reyes	02/23/06		CP_USR_r3.mcd
Checked By	C. Bala		*Structural Analysis Section*	Draw ing No. SEG39135776
Title	Bolts from Clevis Plate to Upper Support Ring			

CHECK BOLTS (NAS1958C9 bolts 0.500-20UNJF-3A, Material-A-286), Insert MS51831CA-206L, Washer NAS1587-8C

Flange 1: Clevis Plate
Part number: SDG39135790
Material: CRES A-286, AMS 5737

Flange 2: Upper Support Ring
Part number: SEG39135786
Material: 7050-T7451, AMS 4108

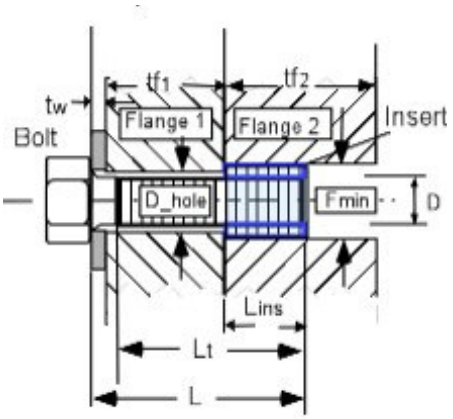

Loads - loads model 2-04 (f=34052.77) LC=1032

Applied tensile load $P := 5986 \cdot lbf$

Applied shear load $V := 5323 \cdot lbf$

Applied bending moment $M := 0 \cdot in \cdot lbf$

Factors of Safety

Ultimate $SFu := 1.4$ Yield $SFy := 1.1$

Joint Separation $SFsep := 1.2$ Fitting factor $FF := 1.15$

Temperature Data (Ref Appendix C2), Launch Case

Assembly $Temp_initial := 70 \cdot deg$

Maximum $Temp_max := 120 \cdot deg$

Minimum $Temp_min := 40 \cdot deg$

Bolt and Insert Data

Nominal diameter of bolt $D := 0.500 \cdot in$

Number of threads/inch $Nt := 20 \cdot \frac{1}{in}$

Total length of bolt $L := 1.297 \cdot in$

Length of insert $Lins := 0.688 \cdot in$

Threaded length $Lt := 0.735 \cdot in$

Min. external diameter of insert $Fmin := 0.615 \cdot in$

(If bolt is fully threaded, input Lt = L)

Depth of recess for insert $lr := 0.02 \cdot in$

This file uses the calculations shown in \\escfil02\2i11_mathcad\8307_bolts\thread_data.mcd

Tue Feb 15 10:38:17 AM 2005

Washer Data

Thickness of washer $tw := 0.078 \cdot in$

Outer Diameter of washer $Dw := .875in$

Inner Diameter of washer $Dwi := 0.504 \cdot in$

Bolt head dia. across flats $dw := 0.710 \cdot in$ (used only if there is no washer)

Flange data

Thickness of flange 1 (SDG39135790) $tf1 := .500 \cdot in$

Thickness of flange 2 $tf2 := .688in$ (Length of insert)

Diameter of hole (SDG39135790) $D_hole := 0.508 \cdot in$

Note: If there is no washer, tw, Dw, and Dwi should be zero.

Material Property Data

Bolt

Temperature correction factor for bolt strength ultimate (Ref. MIL-HDBK-5J, fig. 6.2.1.1.1) $TSu_bolt := .97$ yield $TSy_bolt := .97$

Bolt ultimate tensile allowable stress $Ftu_bolt := 180000 \cdot psi$ (NAS1958)

Bolt ultimate shear allowable stress $Fsu_bolt := 0.6 \cdot Ftu_bolt$

Bolt yield tensile allowable $Fty_bolt := 132353 \cdot psi$ (Ref. Appendix C10)

Temperature correction factor for bolt modulus $TE_bolt := .98$ (Ref. MIL-HDBK-5J, fig. 6.2.1.1.4 (a))

Modulus of elasticity of bolt $E_bolt := \left(29.1 \cdot 10^{6} \cdot psi\right)$ (Ref. MIL-HDBK-5J, table 6.2.1.0 (b))

Thermal coefficient for bolt: $\beta_bolt_hot := 9.1 \cdot 10^{-6} \cdot \frac{\frac{in}{in}}{deg}$ $\beta_bolt_cold := 8.9 \cdot 10^{-6} \cdot \frac{\frac{in}{in}}{deg}$

(Ref. MIL-HDBK-5J, fig. 6.2.1.0)

Insert

Temperature correction factor for insert strength $TS_ins := .97$ (Ref. MIL-HDBK-5J, fig. 6.2.1.1.1)

Ultimate tensile allowable stress $Ftu_ins := 140000 \cdot psi$ (Ref. MS51831)

Ultimate shear allowable stress $Fsu_ins := 0.6 \cdot Ftu_ins$

Washer

Temperature correction factor for washer modulus $TE_washer := .97$ (Ref. MIL-HDBK-5J, fig. 6.2.1.1.1)

Modulus of elasticity of washer $E_washer := \left(29.1 \cdot 10^{6} \cdot psi\right)$ (Ref. MIL-HDBK-5J, table 6.2.1.0(b))

Flanges

Stiffness of the joint depends upon number of members in the grip of the fasteners, Modulus of elasticity of these members, and diameters of the bolt and the washer.

Temperature correction factor for flange 1 — $Tf1E := .97$ (modulus) (Ref. MIL-HDBK-5J, fig. 6.2.1.1.1)

Temperature correction factor for flange 2 — $Tf2E := .99$ (modulus) (Ref. MIL-HDBK-5J, fig. 3.7.6.1.4 and Appendix C9)

$Tf2s := .98$ (strength) (Ref. MIL-HDBK-5J, fig. 3.7.4.2.1)

Shear strength allowable for flanges — $Fsu_f2 := 44000 \cdot psi$ (Ref. MIL-HDBK-5J, table 3.7.4.0(d))

Modulus of elasticity for the parts in the joint — $E_flange1 := \left(29.1 \cdot 10^{6} \cdot psi\right)$ (Ref. MIL-HDBK-5J, table 6.2.1.0(b))

$E_flange2 := \left(10.3 \cdot 10^{6} \cdot psi\right)$ (Ref. MIL-HDBK-5J, table 3.7.4.0(d))

Coefficient of thermal expansion for flanges — $\beta_flange1_hot := 9.1 \cdot 10^{-6} \cdot \frac{\frac{in}{in}}{deg}$ (Ref. MIL-HDBK-5J, fig. 6.2.1.0)

$\beta_flange1_cold := 9.0 \cdot 10^{-6} \cdot \frac{\frac{in}{in}}{deg}$

$\beta_flange2_hot := 12.8 \cdot 10^{-6} \cdot \frac{\frac{in}{in}}{deg}$ (Ref. MIL-HDBK-5J, table 3.7.4.0(b1) and Appendix C9)

$\beta_flange2_cold := 12.3 \cdot 10^{-6} \cdot \frac{\frac{in}{in}}{deg}$

Torque/Preload data

Maximum torque (65% of Yield) — $Tmax := 1032 \cdot in \cdot lbf$ Loading plane factor: $n := .5$

Minimum torque (95% of max. torque) — $Tmin := 980 \cdot in \cdot lbf$ Preload Uncertainty: $u := 0.25$

Torque coefficient: $k := 0.15$

This file uses the calculations shown in \\escfil02\2i11_mathcad\8307_bolts\bolt_stiffness_insert_RevC

Mon Feb 14 12:49:24 2005

Bolt Load data

Bolt/joint stiffness factor	$= 0.305$	Preload due to temperature	$Pthr_pos = 491.4 \cdot lbf$
Max. preload	$PLDmax = 17691.4 \cdot lbf$		$Pthr_neg = -276.6 \cdot lbf$
Min. preload	$PLDmin = 8663.4 \cdot lbf$	Uncertainty factor	$u = 0.25$
Joint separation load	$Psep = 7183.2 \cdot lbf$	Torque coefficient	$k = 0.15$
Max. load on the bolt(ultimate)	$Pb = 19161.9 \cdot lbf$	Loading plane factor	$n = 0.5$
Max. load on the bolt(yield)	$Pby = 18846.8 \cdot lbf$	Thread shear pullout load of bolt or insert	$Pths = 41824.4 \cdot lbf$
Bolt ultimate tensile strength	$PAt = 27425.9 \cdot lbf$	Thread shear pullout load in parent metal	$Ppths = 28659.1 \cdot lbf$

Length_check = "Bolt length is sufficient"

Summary of Margins for bolt:

Joint separation	$MS_1 = 0.238$	Direct Thread shear Ultimate	$MS_6 = 1.97$
Direct Tension Ultimate	$MS_2 = 1.85$	Total Thread shear Ultimate	$MS_7 = 0.5$
Direct Tension Yield	$MS_3 = 1.66$	Shear Ultimate	$MS_8 = 0.82$
Total Tension Ultimate	$MS_4 = 0.43$	Bending Ultimate	$MS_9 = 10$
Total Tension Yield	$MS_5 = 0.07$	Combined shear, tension and bending ultimate	$MS_{10} = 0.205$

Determination of the smallest margin of safety for the bolt, and the failure mode:

$MSbolt := \min(MS)$

$MSbolt = 0.070$ Failure_Mode = "Total Tension Yield"

Bolt Fail-Safe Analysis for Clevis Plate to Upper Support Ring

It will be assumed that one bolt will fail. There are now five, NAS1958C9 0.50-20 UNJF fasteners, holding the Clevis Plate to the Upper Support Ring. The drawing number illustrating the Clevis Plate to the Upper Support Ring is SEG39135776.

Determining Fail Safe Loads:

$ftfs := \frac{Mbase}{3 \cdot dz1} + \frac{Py_pin}{5}$ $\quad ftfs = 6380.163 \cdot lbf$ Applied tensile load

$fsfs := \frac{Pz_pin}{5}$ $\quad fsfs = 6387.222 \cdot lbf$ Applied shear load

Fail-safe Loads. Launch case

Applied tensile load $\quad P_FS := 6380 \cdot lbf$

Applied shear load $\quad V_FS := 6387 \cdot lbf$

Applied bending moment $\quad M_FS := 0 \cdot in \cdot lbf$

Fail-safe Factors of Safety

Ultimate $\quad SFu_FS := 1.0$

Joint Separation $\quad SFsep_FS := 1.0$

This file uses the calculations shown in \\escfil02\2i11_mathcad\8307_bolts\bolt_stiffness_insert_FS_RevC

Mon Feb 14 12:51:39 2005

Bolt Fail-safe Load data

Joint separation load $\quad Psep_FS = 6380 \cdot lbf$

Max. load on the bolt(ultimate) $\quad Pb_FS = 18810.9 \cdot lbf$

Summary of fail-safe Margins for bolt:

Joint separation	$MS_FS_1 = 0.393$	Total Thread shear Ultimate	$MS_FS_5 = 0.52$
Direct Tension Ultimate	$MS_FS_2 = 2.74$	Shear Ultimate	$MS_FS_6 = 1.12$
Total Tension Ultimate	$MS_FS_3 = 0.458$	Bending Ultimate	$MS_FS_7 = 10$
Direct Thread shear Ultimate	$MS_FS_4 = 2.91$	Combined shear, tension and bending ultimate	$MS_FS_8 = 0.285$

Determination of the smallest fail-safe margin of safety for the bolt, and the failure mode:

$MSbolt_FS := \min(MS_FS)$

$MSbolt_FS = 0.285$ $\quad$ Failure_Mode_FS = "Combined Shear Tension Bending Ultimate"

3.10.6 Upper Interface Plate to Vacuum Case

Prepared By	Name	Date	Engineering and Science Contract Group	File Name
	G. Reyes	02/27/06		UI_VC_r3.mcd
Checked By	C. Bala		*Structural Analysis Section*	Draw ing No. SEG39135776
Title	Bolts from Upper Interface Plate to Vacuum Case			

Upper Interface Plate to Vacuum Case Bolt Analysis

The Vacuum Case Assembly consists of four upper interface plates. There are a total of 12 fasteners attaching the upper interface plate to the vacuum case. The fasteners are NAS1956C10 (4 bolts), NAS1956C8 (6 bolts), and NAS1956C7 (2 bolts), 180 ksi, 0.375-24 UNJF. Fastener NAS1956C10 will experience a higher load and therefore the following bolt analysis will assume that all bolts are NAS1956C10. There is also one shear pin 0.875" in diameter. The drawing number for the Vacuum Case Assembly is SEG39135776.

Bolt Geometry

size thread/in

$$bolt := \begin{pmatrix} 0.375 & 24 \\ 0.375 & 24 \\ 0.375 & 24 \\ 0.375 & 24 \\ 0.375 & 24 \\ 0.375 & 24 \\ 0.375 & 24 \\ 0.375 & 24 \\ 0.375 & 24 \\ 0.375 & 24 \\ 0.375 & 24 \\ 0.375 & 24 \end{pmatrix}$$

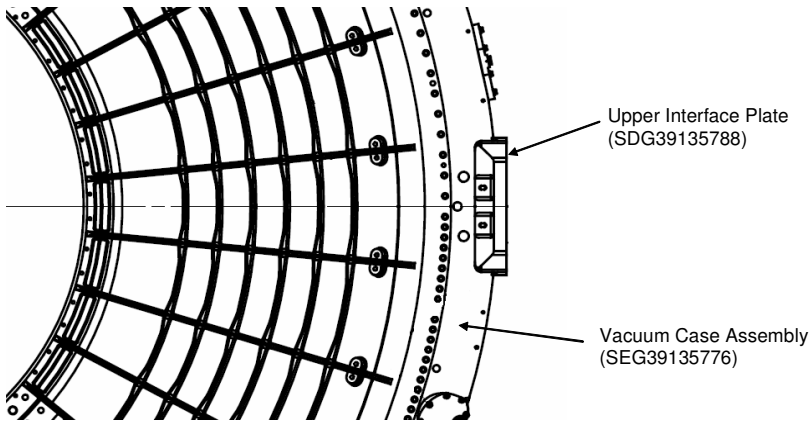

Top View of Vacuum Case (VC)

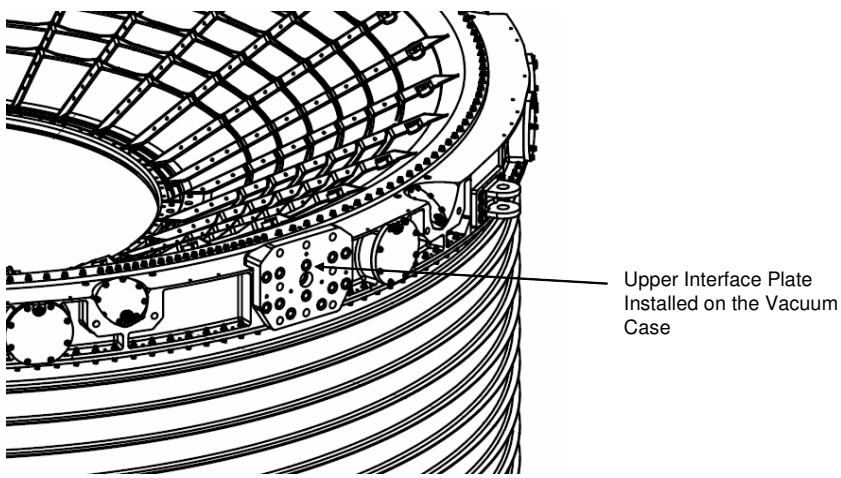

Side View of Vacuum Case (VC) Assembly

$i := 1 .. rows(bolt)$

$N_i := bolt_{i,2} \cdot \frac{1}{in}$ pitch of bolt

$D_i := bolt_{i,1} \cdot in$ bolt diameter

$$At_i := \beta \cdot \left(\frac{D_i - 0.9743 \cdot \frac{1}{N_i}}{2} \right)^2$$ Tensile Area of bolt

$$As_i := \beta \cdot \left(\frac{D_i - 1.299038 \cdot \frac{1}{N_i}}{2} \right)^2$$ Shear Area of bolt

Prepared By	Name	Date	Engineering and Science Contract Group	File Name
	G. Reyes	02/27/06		UI_VC_r3.mcd
Checked By	C. Bala		*Structural Analysis Section*	Draw ing No. SEG39135776
Title	Bolts from Upper Interface Plate to Vacuum Case			

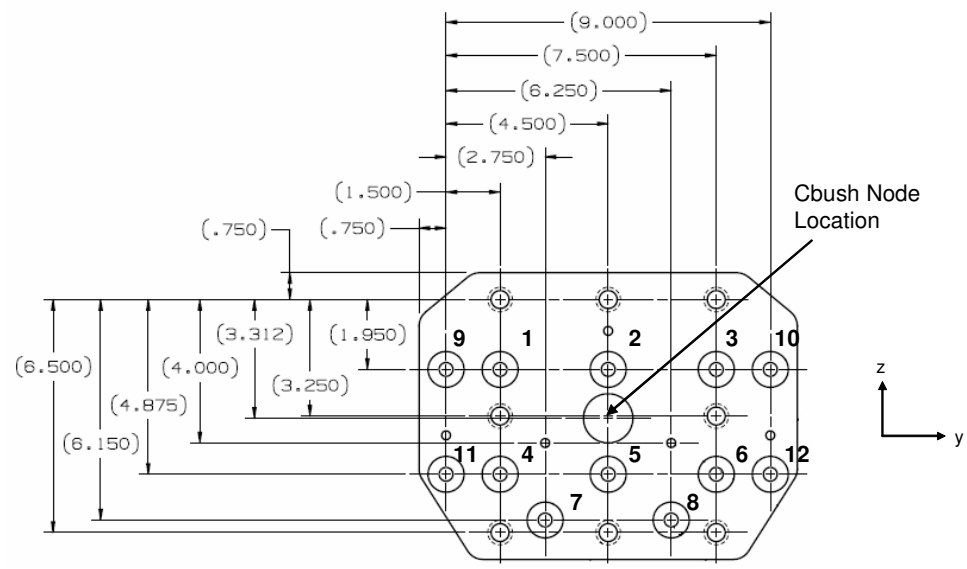

Upper Interface Plate to Vacuum Case Bolt Pattern

Bolt no.	x co-ord	y co-ord	z co-ord
1	0.0	−3.0	1.362
2	0.0	0.0	1.362
3	0.0	3.0	1.362
4	0.0	−3.0	−1.563
5	0.0	0.0	−1.563
6	0.0	3.0	−1.563
7	0.0	−1.75	−2.838
8	0.0	1.75	−2.838
9	0.0	−4.5	1.362
10	0.0	4.5	1.362
11	0.0	−4.5	−1.563
12	0.0	4.5	−1.563

$$x := \begin{pmatrix} 0.0 \\ 0.0 \\ 0.0 \\ 0.0 \\ 0.0 \\ 0.0 \\ 0.0 \\ 0.0 \\ 0.0 \\ 0.0 \\ 0.0 \\ 0.0 \end{pmatrix} \cdot in \qquad y := \begin{pmatrix} -3.0 \\ 0.0 \\ 3.0 \\ -3.0 \\ 0.0 \\ 3.0 \\ -1.75 \\ 1.75 \\ -4.5 \\ 4.5 \\ -4.5 \\ 4.5 \end{pmatrix} \cdot in \qquad z := \begin{pmatrix} 1.362 \\ 1.362 \\ 1.362 \\ -1.563 \\ -1.563 \\ -1.563 \\ -2.838 \\ -2.838 \\ 1.362 \\ 1.362 \\ -1.563 \\ -1.563 \end{pmatrix} \cdot in$$

Location of applied forces and moments

$xforce := 0.0in \qquad yforce := 0.0in \qquad zforce := 0.0in$

$$cgload := \begin{pmatrix} xforce \\ yforce \\ zforce \end{pmatrix} \qquad cgload = \begin{pmatrix} 0 \\ 0 \\ 0 \end{pmatrix} in$$

Center of gravity of bolt group

$$xcg := \frac{\sum_i x_i}{rows(x)} \qquad xcg = 0\,in \qquad ycg := \frac{\sum_i y_i}{rows(y)} \qquad ycg = 0\,in \qquad zcg := \frac{\sum_i z_i}{rows(z)} \qquad zcg = -0.557\,in$$

$$cg_{bolt} := \begin{pmatrix} xcg \\ ycg \\ zcg \end{pmatrix} \qquad cg_{bolt} = \begin{pmatrix} 0 \\ 0 \\ -0.557 \end{pmatrix} in$$

Note: Since the x direction is into the plate the loads are shared equally between the bolts. In the z direction the bolt pattern is unsymmetric and has a -0.557" offset from the center of gravity.

Load Vector

$$r_{load} := cgload - cg_{bolt} \qquad r_{load} = \begin{pmatrix} 0 \\ 0 \\ 0.557 \end{pmatrix} in$$

Distance from CG of Bolts to Individual Bolts for shear calculations

$$r_i := \sqrt{\left(z_i - zcg\right)^2 + \left(y_i - ycg\right)^2} \qquad r = \begin{pmatrix} 3.561 \\ 1.919 \\ 3.561 \\ 3.164 \\ 1.006 \\ 3.164 \\ 2.875 \\ 2.875 \\ 4.892 \\ 4.892 \\ 4.611 \\ 4.611 \end{pmatrix} in$$

Loads model 2-04 was used to retrieve loads at the four bolted interfaces. A Cbush element located at the center of each interface plate was post processed in NASPOST for forces and moments in the x, y, and z directions. The Cbush element identifications for the four bolted interfaces are 64001, 64002, 64003, and 64004. These loads are read into an array and distributed out to the 12 bolts for each interface plate.

(Note: This joint was checked for minimum margins of safety for launch, nominal landing, and abort landing load cases. The abort landing cases combined with abort landing temperature data resulted in the lowest minimum margins of safety. Therefore, the abort landing cases are used in this analysis.)

Reading database file for bolted joint, abort landing case

$data := READPRN("upperipvcf_r2_abortland.txt")$

$num_bolts := rows(bolt)$

$j := 1..rows(data)$

Loads from 2-04 loads model, abort landing case

Axial Load $Fx_j := data_{j,3} \cdot lbf$

Shear in Y axis $Fy_j := data_{j,4} \cdot lbf$

Shear in Z axis $Fz_j := data_{j,5} \cdot lbf$

Torsion $Mx_j := data_{j,6} \cdot in \cdot lbf$

Moment about Y axis $My_j := data_{j,7} \cdot in \cdot lbf$

Moment about Z axis $Mz_j := data_{j,8} \cdot in \cdot lbf$

Element Identification $ID_j := data_{j,1}$

$ID_j := ID_j \cdot 100 + 1$ Counter for number of bolts in pattern

Load Case Number $LC_j := data_{j,2}$

Applied Bending Moment at Bolts $M_j := 0 \cdot in \cdot lbf$

Format of Output File

The stack commands below are used to stack the element identifications (ID) and load cases (LC) in ascending order per bolt. The element ID number is located in the first column and the LC numbers in the second column. For each element identification, 64001, 64002, 64003, and 64004, the bolt number within the bolt pattern is added to the end of each element identification. For example, the element identification number 64001 will have bolt numbers 01 thru 12 attached to the end for all 64 load cases. This brings the total number of load cases to 3072 (4 joints x 12 bolts x 64 load cases = 3072). See the array example to the right.

$ID := stack(ID, ID+1, ID+2, ID+3, ID+4, ID+5, ID+6, ID+7, ID+8, ID+9, ID+10, ID+11)$

$LC := stack(LC, LC, LC, LC, LC, LC, LC, LC, LC, LC, LC, LC)$

$$\begin{array}{cc} ID & LC \\ \end{array}$$
$$\begin{bmatrix} 6400101 & 2001 \\ 6400101 & 2002 \\ \ldots & \ldots \\ 6400101 & 2064 \\ 6400102 & 2001 \\ 6400102 & 2002 \\ \ldots & \ldots \\ 6400102 & 2064 \\ \ldots & \ldots \\ \ldots & \ldots \\ 6400112 & 2001 \\ 6400112 & 2002 \\ \ldots & \ldots \\ 6400112 & 2064 \end{bmatrix}$$

Array Example

Moment Distribution

$$M_{tot}^{\langle j \rangle} := \begin{pmatrix} Mx_j \\ My_j \\ Mz_j \end{pmatrix} + r_{load} \times \begin{pmatrix} Fx_j \\ Fy_j \\ Fz_j \end{pmatrix}$$

Use the cross-product to determine the additional moments acting on the fasteners.

$Mx_boltcg_j := M_{tot_{1,j}}$ $\quad$ $My_boltcg_j := M_{tot_{2,j}}$ $\quad$ $Mz_boltcg_j := M_{tot_{3,j}}$

Tension on bolts

$$Ftdirect_{i,j} := \begin{cases} 0 \cdot lbf & \text{if } Fx_j \le 0lbf \\ \dfrac{Fx_j}{num_bolts} & \text{otherwise} \end{cases}$$

Direct tensile load calculation - (The if statement checks for compression)

$$Fmz_{i,j} := \begin{cases} 0 \cdot lbf & \text{if } (y_i - ycg) = 0 \cdot in \\ \dfrac{\left[Mz_boltcg_j \cdot (y_i - ycg)\right] At_i}{\sum_i \left[(y_i - ycg)^2 \cdot At_i\right]} & \end{cases}$$

$$Fmy_{i,j} := \begin{cases} 0 \cdot lbf & \text{if } (z_i - zcg) = 0 \cdot in \\ \dfrac{My_boltcg_j \cdot (z_i - zcg) \cdot At_i}{\sum_i \left[\left(\left|z_i - zcg\right|\right)^2 \cdot At_i\right]} & \end{cases}$$

$$Ft_{i,j} := Ftdirect_{i,j} + Fmz_{i,j} + Fmy_{i,j}$$

Total tensile load

Shear on bolts

Secondary shear on bolts $\quad Fs_{i,j} := \dfrac{Mx_boltcg_j \cdot r_i \cdot As_i}{\sum_i \left[(r_i)^2 \cdot (As_i)\right]}$

Total shear load $\quad Fstot_{i,j} := Fs_{i,j}$

(Note : The direct shear is taken by the shear pin.)

The stack commands below are used to stack applied axial load (P), applied shear load (V), and applied moment (M) in ascending order per bolt. These loads are put into an array with the element/bolt number and load case number from above. See the "Output" file below.

$$P := \text{stack}\left[\left(Ft^T\right)^{\langle 1\rangle}, \left(Ft^T\right)^{\langle 2\rangle}, \left(Ft^T\right)^{\langle 3\rangle}, \left(Ft^T\right)^{\langle 4\rangle}, \left(Ft^T\right)^{\langle 5\rangle}, \left(Ft^T\right)^{\langle 6\rangle}, \left(Ft^T\right)^{\langle 7\rangle}, \left(Ft^T\right)^{\langle 8\rangle}, \left(Ft^T\right)^{\langle 9\rangle}, \left(Ft^T\right)^{\langle 10\rangle}, \left(Ft^T\right)^{\langle 11\rangle}, \left(Ft^T\right)^{\langle 12\rangle}\right]$$

$$V := \text{stack}\left[\left(Fstot^T\right)^{\langle 1\rangle}, \left(Fstot^T\right)^{\langle 2\rangle}, \left(Fstot^T\right)^{\langle 3\rangle}, \left(Fstot^T\right)^{\langle 4\rangle}, \left(Fstot^T\right)^{\langle 5\rangle}, \left(Fstot^T\right)^{\langle 6\rangle}, \left(Fstot^T\right)^{\langle 7\rangle}, \left(Fstot^T\right)^{\langle 8\rangle}, \left(Fstot^T\right)^{\langle 9\rangle}\right]$$

$$V := \text{stack}\left[V, \left(Fstot^T\right)^{\langle 10\rangle}, \left(Fstot^T\right)^{\langle 11\rangle}, \left(Fstot^T\right)^{\langle 12\rangle}\right]$$

$$M := \text{stack}(M, M, M, M, M, M, M, M, M, M, M, M)$$

The "Output" file below outputs an array from left to right starting with the element identification (ID), Load case number (LC), applied load on the bolt (P), applied shear on the bolt (V), and applied moment on the bolt (M). See the output array example below. The array is then written to a text file.

$$\text{Output} := \text{augment}\left(ID, LC, \frac{P}{lbf}, \frac{V}{lbf}, \frac{M}{in \cdot lbf}\right)$$

(Note: Since the ID and LC numbers are dimensionless, the P, V, and M values are divided by their units in order to make the array dimensionless.)

$$\begin{array}{ccccc} ID & LC & P & V & M \\ \end{array}$$
$$\begin{bmatrix} 6400101 & 2001 & 1011.17 & -358.78 & 0 \\ 6400101 & 2002 & 957.81 & -465.51 & 0 \\ \ldots & \ldots & \ldots & \ldots & \ldots \\ 6400101 & 2064 & 645.19 & -160.68 & 0 \\ 6400102 & 2001 & 1171.64 & -100.17 & 0 \\ 6400102 & 2002 & 1078.73 & -130.24 & 0 \\ \ldots & \ldots & \ldots & \ldots & \ldots \\ 6400102 & 2064 & 832.25 & -86.57 & 0 \\ \ldots & \ldots & \ldots & \ldots & \ldots \\ \ldots & \ldots & \ldots & \ldots & \ldots \\ 6400112 & 2001 & -170.48 & -240.73 & 0 \\ 6400112 & 2002 & -357.40 & -312.99 & 0 \\ \ldots & \ldots & \ldots & \ldots & \ldots \\ 6400112 & 2064 & -155.87 & -208.06 & 0 \end{bmatrix}$$

Example of Output Array

Size of the "Output" Array: $\text{rows}(\text{Output}) = 3072$

(12 bolts x 64 load cases) x 4 joints = 3072 load cases

(Note: The output array to the left is an example of the array format. The loads in this example are for format purposes only and should NOT be used in this analysis.)

$$\text{WRITEPRN}(\text{"output_forces_upperipvcf_r2_abortland.txt"}) := \text{Output}$$

Prepared By	Name	Date	Engineering and Science Contract Group	File Name
	G. Reyes	02/27/06		UI_VC_r3.mcd
Checked By	C. Bala		*Structural Analysis Section*	Drawing No. SEG39135776
Title	Bolts from Upper Interface Plate to Vacuum Case			

CHECK BOLTS (NAS1956C10 0.375-24UNJF-3A, Material-A-286), Insert MS51832CA-204L , Washer NAS1587-6C

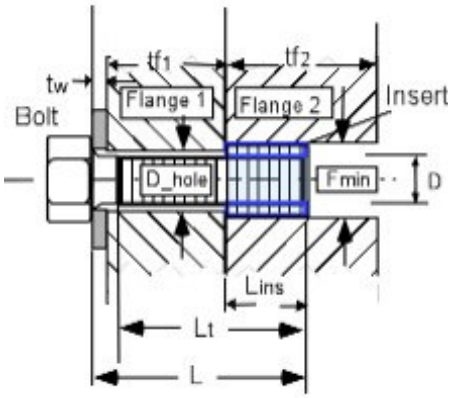

The array from the text file above is read:

$data := READPRN("output_forces_upperipvcf_r2_abortland.txt")$

$s := 1..rows(data)$

Flange 1: Upper Interface Plate
Part number: SEG39135788
Material: 7050-T7451

Flange 2: Upper Support Ring Assy
Part number: SEG39135786
Material: 7050-T7451

Loads from Abort Landing Load Cases

Applied tensile load $P_s := data_{s,3} \cdot lbf$

Applied shear load $V_s := data_{s,4} \cdot lbf$

Applied bending moment $M_s := data_{s,5} \cdot in \cdot lbf$

Element Identification $ID_s := data_{s,1}$

Load case number $LC_s := data_{s,2}$

Factors of Safety

Ultimate $SFu := 1.4$

Yield $SFy := 1.1$

Joint Separation $SFsep := 1.2$

Fitting factor $FF := 1.15$

Temperature Data (Ref Appendix C2), Abort Landing Case

Assembly $Temp_initial := 70 \cdot deg$

Maximum $Temp_max := 150 \cdot deg$

Minimum $Temp_min := 40 \cdot deg$

Bolt and Insert Data

Nominal diameter of bolt $D := 0.375 \cdot in$

Number of threads/inch $Nt := 24 \cdot \frac{1}{in}$

Total length of bolt $L := 1.203 \cdot in$

Length of insert $Lins := 0.500 \cdot in$

Threaded length $Lt := 0.578 \cdot in$

Min. external diameter of insert $Fmin := 0.551 \cdot in$

(If bolt is fully threaded, input Lt = L)

Depth of recess for insert $lr := 0.02 \cdot in$

This file uses the calculations shown in \\escfil02\2i11_mathcad\8307_bolts\thread_data.mcd

Prepared By	Name	Date		File Name
	G. Reyes	02/27/06		UI_VC_r3.mcd
Checked By	C. Bala		**Engineering and Science Contract Group** *Structural Analysis Section*	Draw ing No. SEG39135776
Title	Bolts from Upper Interface Plate to Vacuum Case			

Washer Data

Thickness of washer $tw := 0.078 \cdot in$

Outer Diameter of washer $Dw := .687in$

Inner Diameter of washer $Dwi := 0.378 \cdot in$

Bolt head dia. across flats $dw := 0.523 \cdot in$ (used only if there is no washer)

Flange data

Thickness of flange 1 (Ref. SDG39135788) $tf1 := .410 \cdot in$

Thickness of flange 2 $tf2 := .500in$ (Length of insert)

Diameter of hole (Ref. SDG39135788) $D_hole := 0.386 \cdot in$

Note: If there is no washer, tw, Dw, and Dwi should be zero.

Material Property Data

Bolt

Temperature correction factor for bolt strength ultimate (Ref. MIL-HDBK-5J, fig. 6.2.1.1.1) $TSu_bolt := .97$ yield $TSy_bolt := .97$

Bolt ultimate tensile allowable stress $Ftu_bolt := 180000 \cdot psi$ (Ref. NAS1956)

Bolt ultimate shear allowable stress $Fsu_bolt := 0.6 \cdot Ftu_bolt$

Bolt yield tensile allowable $Fty_bolt := 132353 \cdot psi$ (Ref. Appendix C10)

Temperature correction factor for bolt modulus $TE_bolt := .98$ (Ref. MIL-HDBK-5J, fig. 6.2.1.1.4(a))

Modulus of elasticity of bolt $E_bolt := \left(29.1 \cdot 10^{6} \cdot psi\right)$ (Ref. MIL-HDBK-5J, table 6.2.1.0(b))

Thermal coefficient for bolt: $u_bolt_hot := 9.1 \cdot 10^{-6} \cdot \frac{\frac{in}{in}}{deg}$ $u_bolt_cold := 8.9 \cdot 10^{-6} \cdot \frac{\frac{in}{in}}{deg}$

(Ref. MIL-HDBK-5J, fig. 6.2.1.0)

Insert

Temperature correction factor for insert strength $TS_ins := .97$ (Ref. MIL-HDBK-5J, fig. 6.2.1.1.1)

Ultimate tensile allowable stress $Ftu_ins := 140000 \cdot psi$ (Ref. MS51832)

Ultimate shear allowable stress $Fsu_ins := 0.6 \cdot Ftu_ins$

Washer

Temperature correction factor for washer modulus $TE_washer := .97$ (Ref. MIL-HDBK-5J, fig. 6.2.1.1.1)

Modulus of elasticity of washer $E_washer := \left(29.1 \cdot 10^{6} \cdot psi\right)$ (Ref. MIL-HDBK-5J, table 6.2.1.0(b))

Flanges

Stiffness of the joint depends upon number of members in the grip of the fasteners, Modulus of elasticity of these members, and diameters of the bolt and the washer.

Temperature correction factor for flange 1 $Tf1E := .98$ (modulus) (Ref. MIL-HDBK-5J, fig. 3.7.6.1.4 and Appendix C9)

Temperature correction factor for flange 2 $Tf2E := .98$ (modulus)

$Tf2s := .97$ (strength) (Ref. MIL-HDBK-5J, fig. 3.7.4.2.1)

Shear strength allowable for flanges $Fsu_f2 := 44000 \cdot psi$ (Ref. MIL-HDBK-5J, table 3.7.4.0(d))

Modulus of elasticity for the parts in the joint (Ref. MIL-HDBK-5J, table 3.7.4.0(d)) $E_flange1 := \left(10.2 \cdot 10^{6} \cdot psi\right)$ $E_flange2 := \left(10.2 \cdot 10^{6} \cdot psi\right)$

Coefficient of thermal expansion for flanges (Ref. MIL-HDBK-5J, table 3.7.4.0(d) and Appendix C9)

$u_flange1_hot := 12.8 \cdot 10^{-6} \cdot \frac{\frac{in}{in}}{deg}$ $u_flange2_hot := 12.8 \cdot 10^{-6} \cdot \frac{\frac{in}{in}}{deg}$

$u_flange1_cold := 12.1 \cdot 10^{-6} \cdot \frac{\frac{in}{in}}{deg}$ $u_flange2_cold := 12.1 \cdot 10^{-6} \cdot \frac{\frac{in}{in}}{deg}$

Torque/Preload data

Maximum torque (60% of yield) $Tmax := 392 \cdot in \cdot lbf$

Minimum torque (95% of max. torque) $Tmin := 372 \cdot in \cdot lbf$

Torque coefficient: $k := 0.15$

Loading plane factor: $n := .5$

Preload Uncertainty: $:= 0.25$

This file uses the calculations shown in \\escfil02\2i11_mathcad\8307_bolts\multi_bolt_stiffness_insert_RevC

Insert Stiffness File

Prepared By	Name	Date		File Name
	G. Reyes	02/27/06		UI_VC_r3.mcd
Checked By	C. Bala		**Engineering and Science Contract Group** *Structural Analysis Section*	Draw ing No. SEG39135776
Title	Bolts from Upper Interface Plate to Vacuum Case			

Bolt Load data

Bolt/joint stiffness factor	$= = 0.384$	Preload due to temperature	$Pthr_pos = 671\ lbf$
Max. preload	$PLDmax = 9382.1\ lbf$		$Pthr_neg = -217.6\ lbf$
Min. preload	$PLDmin = 4306.8\ lbf$	Uncertainty factor	$= 0.25$
Joint separation load	$max(Psep) = 4011.9\ lbf$	Torque coefficient	$k = 0.15$
Max. load on the bolt(ultimate)	$max(Pb) = 10415.7\ lbf$	Loading plane factor	$n = 0.5$
Max. load on the bolt(yield)	$max(Pby) = 10194.2\ lbf$	Thread shear pullout load of bolt or insert	$Pths = 30946.4\ lbf$
Bolt ultimate tensile strength	$PAt = 15003.1\ lbf$	Thread shear pullout load in parent metal	$Ppths = 18470\ lbf$

Length_check = "Bolt length is sufficient"

Summary of Margins for bolt:

Joint separation	$MS_min_{1,1} = 0.155$	Direct Thread shear Ultimate	$MS_min_{6,1} = 2.431$
Direct Tension Ultimate	$MS_min_{2,1} = 1.787$	Total Thread shear Ultimate	$MS_min_{7,1} = 0.773$
Direct Tension Yield	$MS_min_{3,1} = 1.608$	Shear Ultimate	$MS_min_{8,1} = 2.94$
Total Tension Ultimate	$MS_min_{4,1} = 0.440$	Bending Ultimate	$MS_min_{9,1} = 10$
Total Tension Yield	$MS_min_{5,1} = 0.082$	Combined shear, tension and bending ultimate	$MS_min_{10,1} = 0.429$

Determination of the smallest margin of safety for the bolt, and the failure mode:

$MSbolt := min(MS)$

$MSbolt = 0.082$ Failure_Mode = "Total Tension Yield"

$MS_min_ID = 6400210$	Element Identification (64002) and Bolt Number (10) for Minimum Margin
$MS_min_LC = 2038$	Load Case Number for Minimum Margin
$MS_min_P = 3343.3$	Applied Tensile Load for Minimum Margin
$MS_min_V = -913.5$	Applied Shear Load for Minimum Margin
$MS_min_M = 0$	Applied Bending Moment for Minimum Margin

Fail-Safe Analysis for Upper Interface Plate to Vacuum Case (Shear Pin Failure)

This portion of the analysis assumes a failure in the shear pin. The shear pin part number is SDG39135755-001. All 12 NAS1956 fasteners will take the direct shear load.

Direct shear Loads $Fsd_{i,j} := \dfrac{\sqrt{(Fy_j)^2 + (Fz_j)^2}}{num_bolts}$

Total shear load $Fstot_{i,j} := Fs_{i,j} + Fsd_{i,j}$

(Note: The Fs variable is the secondary shear and calculated above.)

The stack command below is used to stack the applied shear load (V) in ascending order per bolt. The applied axial load (P) and applied moment (M) are stacked above and reused in the output file below. These loads are put into an array with the element/bolt number and load case number from above.

$$V := stack\left[(Fstot^T)^{\langle 1\rangle}, (Fstot^T)^{\langle 2\rangle}, (Fstot^T)^{\langle 3\rangle}, (Fstot^T)^{\langle 4\rangle}, (Fstot^T)^{\langle 5\rangle}, (Fstot^T)^{\langle 6\rangle}, (Fstot^T)^{\langle 7\rangle}, (Fstot^T)^{\langle 8\rangle}, (Fstot^T)^{\langle 9\rangle}\right]$$

$$V := stack\left[V, (Fstot^T)^{\langle 10\rangle}, (Fstot^T)^{\langle 11\rangle}, (Fstot^T)^{\langle 12\rangle}\right]$$

The "Output" file below outputs an array from left to right starting with the element identification (ID), Load case number (LC), applied load on the bolt (P), applied shear on the bolt (V), and applied moment on the bolt (M). The array is written to a text file. For the format of the array see the output example array above.

$$Output := augment\left(ID, LC, \frac{P}{lbf}, \frac{V}{lbf}, \frac{M}{in \cdot lbf}\right)$$

(Note: Since the ID and LC numbers are dimensionless, the P, V, and M values are divided by their units in order to make the array dimensionless.)

Size of the "Output" Array: $rows(Output) = 3072$

(12 bolts x 64 load cases) x 4 joints = 3072 load cases

WRITEPRN("output_forces_upperipvcf_r2_abortland_pinfs.txt") := Output

Fail-safe Analysis (Shear Pin Failure)

data_fsp := READPRN("output_forces_upperipvcf_r2_abortland_pinfs.txt")

$s := 1 .. rows(data_fsp)$

Prepared By	Name	Date	Engineering and Science Contract Group	File Name
	G. Reyes	02/27/06		UI_VC_r3.mcd
Checked By	C. Bala		*Structural Analysis Section*	Draw ing No. SEG39135776
Title	Bolts from Upper Interface Plate to Vacuum Case			

Fail-safe Loads, abort landing

Applied tensile load $P_FS_s := data_fsp_{s,3} \cdot lbf$ $ID_FS_s := data_fsp_{s,1}$

Applied shear load $V_FS_s := data_fsp_{s,4} \cdot lbf$ $LC_FS_s := data_fsp_{s,2}$

Applied bending moment $M_FS_s := data_fsp_{s,5} \cdot in \cdot lbf$

Fail-safe Factors of Safety

Ultimate $SFu_FS := 1.0$

Joint Separation $SFsep_FS := 1.0$

This file uses the calculations shown in \\escfil02\2i11_mathcad\8307_bolts\ multi_bolt_stiffness_insert_FS_RevC

Bolt Fail-safe Load data

Joint separation load $\max(Psep_FS) = 3343.25\ lbf$

Max. load on the bolt(ultimate) $\max(Pb_FS) = 10120.4\ lbf$

Summary of fail-safe Margins for bolt:

Joint separation	$MS_minFS_{1,1} = 0.386$	Total Thread shear Ultimate	$MS_minFS_{5,1} = 0.825$
Direct Tension Ultimate	$MS_minFS_{2,1} = 2.902$	Shear Ultimate	$MS_minFS_{6,1} = 3.96$
Total Tension Ultimate	$MS_minFS_{3,1} = 0.482$	Bending Ultimate	$MS_minFS_{7,1} = 10$
Direct Thread shear Ultimate	$MS_minFS_{4,1} = 3.8$	Combined shear, tension and bending ultimate	$MS_minFS_{8,1} = 0.4816$

Determination of the smallest fail-safe margin of safety for the bolt, and the failure mode:

$MSbolt_FS := \min(MS_FS)$

$MSbolt_FS = 0.386$ Failure_Mode_FS = "Joint Separation"

$MS_min_ID = 6400210$ Element Identification (64002) and Bolt Number (10) for Minimum Margin

$MS_min_LC = 2038$ Load Case Number for Minimum Margin

$MS_min_P = 3343.3$ Applied Tensile Load for Minimum Margin

$MS_min_V = 270.4$ Applied Shear Load for Minimum Margin

$MS_min_M = 0$ Applied Bending Moment for Minimum Margin

Bolt Fail-Safe Analysis for Upper Interface Plate to Vacuum Case

Since bolt number 10 has the lowest margin of safety it is assumed that this bolt will be the first bolt to fail. There are now 11, NAS1956C10 0.375-24 UNJF fasteners, holding the upper interface plate to the vacuum case. The drawing number for the Vacuum Case Assembly is SEG39135776.

$$bolt2 := \begin{array}{c} \begin{array}{cc} \text{size} & \text{thread/in} \end{array} \\ \begin{pmatrix} 0.375 & 24 \\ 0.375 & 24 \\ 0.375 & 24 \\ 0.375 & 24 \\ 0.375 & 24 \\ 0.375 & 24 \\ 0.375 & 24 \\ 0.375 & 24 \\ 0.375 & 24 \\ 0.375 & 24 \\ 0.375 & 24 \end{pmatrix} \end{array}$$

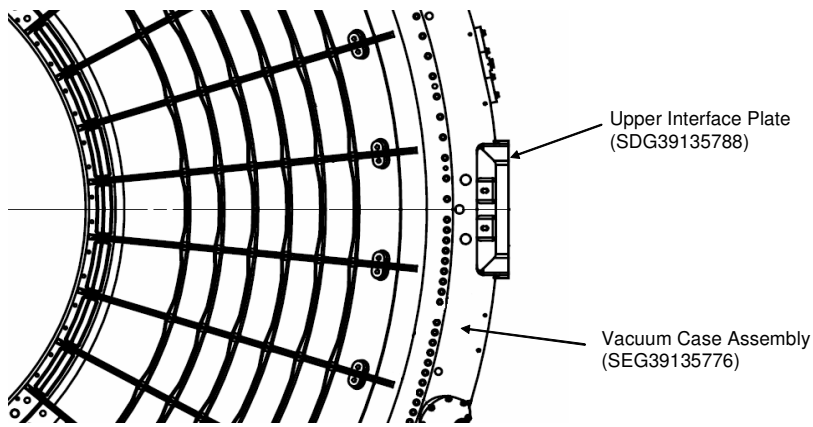

Top View of Vacuum Case (VC)

$s := 1 .. rows(bolt2)$

$N2_s := bolt2_{s,2} \cdot \frac{1}{in}$ pitch of bolt $\qquad D2_s := bolt2_{s,1} \cdot in$ bolt diameter

$At2_s := \beta \cdot \left(\frac{D2_s - 0.9743 \cdot \frac{1}{N2_s}}{2} \right)^2$ Tensile Area of bolt $\qquad As2_s := \beta \cdot \left(\frac{D2_s - 1.299038 \cdot \frac{1}{N2_s}}{2} \right)^2$ Shear Area of bolt

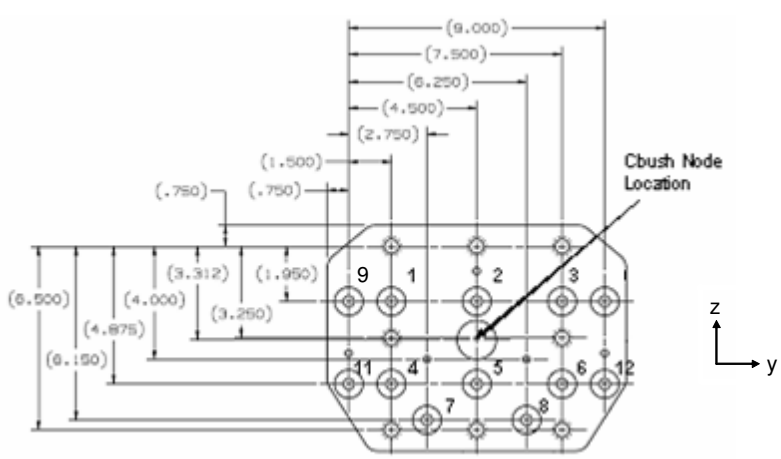

Upper Interface Plate to Vacuum Case Bolt Pattern for Fail-Safe Analysis

Bolt no.	x co-ord	y co-ord	z co-ord
1	0.0	−3.0	1.362
2	0.0	0.0	1.362
3	0.0	3.0	1.362
4	0.0	−3.0	−1.563
5	0.0	0.0	−1.563
6	0.0	3.0	−1.563
7	0.0	−1.75	−2.838
8	0.0	1.75	−2.838
9	0.0	−4.5	1.362
11	0.0	−4.5	−1.563
12	0.0	4.5	−1.563

$$x2 := \begin{pmatrix} 0.0 \\ 0.0 \\ 0.0 \\ 0.0 \\ 0.0 \\ 0.0 \\ 0.0 \\ 0.0 \\ 0.0 \\ 0.0 \\ 0.0 \end{pmatrix} \cdot in \qquad y2 := \begin{pmatrix} -3.0 \\ 0.0 \\ 3.0 \\ -3.0 \\ 0.0 \\ 3.0 \\ -1.75 \\ 1.75 \\ -4.5 \\ -4.5 \\ 4.5 \end{pmatrix} \cdot in \qquad z2 := \begin{pmatrix} 1.362 \\ 1.362 \\ 1.362 \\ -1.563 \\ -1.563 \\ -1.563 \\ -2.838 \\ -2.838 \\ 1.362 \\ -1.563 \\ -1.563 \end{pmatrix} \cdot in$$

Location of applied forces and moments

$xforce2 := 0.0in \qquad yforce2 := 0.0in \qquad zforce2 := 0.0in$

$$cgload2 := \begin{pmatrix} xforce2 \\ yforce2 \\ zforce2 \end{pmatrix} \qquad cgload2 = \begin{pmatrix} 0 \\ 0 \\ 0 \end{pmatrix} in$$

Center of gravity of bolt group

$$xcg2 := \frac{\sum_s x2_s}{rows(x2)} \qquad xcg = 0\,in \qquad ycg2 := \frac{\sum_s y2_s}{rows(y2)} \qquad ycg2 = -0.409\,in \qquad zcg2 := \frac{\sum_s z2_s}{rows(z2)} \qquad zcg2 = -0.731\,in$$

$$cg_{bolt2} := \begin{pmatrix} xcg2 \\ ycg2 \\ zcg2 \end{pmatrix} \qquad cg_{bolt2} = \begin{pmatrix} 0 \\ -0.409 \\ -0.731 \end{pmatrix} in$$

Note: Since the x direction is into the plate the loads are shared equally between the bolts. However, due to a failure in bolt 10, the y and z directions in the bolt pattern are unsymmetric and have offsets from the center of gravity.

Load Vector

$$r_{load2} := cgload2 - cg_{bolt2} \qquad r_{load2} = \begin{pmatrix} 0 \\ 0.409 \\ 0.731 \end{pmatrix} in$$

Distance from CG of Bolts to Individual Bolts for shear calculations

$$r2_s := \sqrt{\left(z2_s - zcg2\right)^2 + \left(y2_s - ycg2\right)^2}$$

$$r2 = \begin{pmatrix} 3.331 \\ 2.133 \\ 4.000 \\ 2.721 \\ 0.927 \\ 3.509 \\ 2.497 \\ 3.017 \\ 4.595 \\ 4.175 \\ 4.979 \end{pmatrix} \text{in}$$

Reading database file for bolted joint, abort landing case

data := READPRN("upperipvcf_r2_abortland.txt")

$q := 1 .. \text{rows}(data)$

num_bolts2 := rows(bolt2)

Loads from 2-04 loads model, abort landing case

Axial Load $Fx2_q := data_{q,3} \cdot lbf$

Shear in Y axis $Fy2_q := data_{q,4} \cdot lbf$

Shear in Z axis $Fz2_q := data_{q,5} \cdot lbf$

Torsion $Mx2_q := data_{q,6} \cdot in \cdot lbf$

Moment about Y axis $My2_q := data_{q,7} \cdot in \cdot lbf$

Moment about Z axis $Mz2_q := data_{q,8} \cdot in \cdot lbf$

Element Identification $ID2_q := data_{q,1}$

$ID2_q := ID2_q \cdot 100 + 1$ Counter for number of bolts in pattern

Load Case Number $LC2_q := data_{q,2}$

Applied Bending Moment at Bolts $M2_q := 0 \cdot in \cdot lbf$

Format of Output File

The stack command below is used to stack the element identifications (ID2) and load cases (LC2) in ascending order per bolt. See the array example above for explanation. Note: bolt number 10 is not included.

$ID2 := \text{stack}(ID2, ID2 + 1, ID2 + 2, ID2 + 3, ID2 + 4, ID2 + 5, ID2 + 6, ID2 + 7, ID2 + 8, ID2 + 10, ID2 + 11)$

$LC2 := \text{stack}(LC2, LC2, LC2, LC2, LC2, LC2, LC2, LC2, LC2, LC2, LC2)$

Moment Distribution

$$M_{tot2}^{\langle q \rangle} := \begin{pmatrix} Mx2_q \\ My2_q \\ Mz2_q \end{pmatrix} + r_{load} \times \begin{pmatrix} Fx2_q \\ Fy2_q \\ Fz2_q \end{pmatrix}$$

Use the cross-product to determine the additional moments acting on the fasteners.

$Mx_boltcg2_q := M_{tot2_{1,q}}$ $\quad$ $My_boltcg2_q := M_{tot2_{2,q}}$ $\quad$ $Mz_boltcg2_q := M_{tot2_{3,q}}$

Tension on bolts

$$Ftdirect2_{s,q} := \begin{cases} 0 \cdot lbf & \text{if } Fx2_q \le 0lbf \\ \dfrac{Fx2_q}{num_bolts2} & \text{otherwise} \end{cases}$$

Direct tensile load calculation

$$Fmz2_{s,q} := \begin{cases} 0 \cdot lbf & \text{if } \left(y2_s - ycg2\right) = 0 \cdot in \\ \dfrac{\left[Mz_boltcg2_q \cdot \left(y2_s - ycg2\right)\right] At2_s}{\sum_s \left[\left(y2_s - ycg2\right)^2 \cdot At2_s\right]} & \text{otherwise} \end{cases}$$

$$Fmy2_{s,q} := \begin{cases} 0 \cdot lbf & \text{if } \left(z2_s - zcg2\right) = 0 \cdot in \\ \dfrac{My_boltcg2_q \cdot \left(z2_s - zcg2\right) \cdot At2_s}{\sum_s \left[\left(\left|z2_s - zcg2\right|\right)^2 \cdot At2_s\right]} & \text{otherwise} \end{cases}$$

$Ft2_{s,q} := Ftdirect2_{s,q} + Fmz2_{s,q} + Fmy2_{s,q}$ Total Tensile load

Shear on bolts

Secondary shear on bolts $\quad$ $$Fs2_{s,q} := \frac{Mx_boltcg2_q \cdot r2_s \cdot As2_s}{\sum_s \left[\left(r2_s\right)^2 \cdot \left(As2_s\right)\right]}$$ Total shear load $\quad$ $Fstot2_{s,q} := Fs2_{s,q}$

(Note: The direct shear is taken by the shear pin.)

The stack commands below are used to stack applied axial load (P2), applied shear load (V2), and applied moment (M2) in ascending order per bolt. These loads are put into an array with the element/bolt number and load case number from above. See the "Output" file below. Notice how there is only 11 bolts, since bolt number 10 is not included.

$$P2 := \text{stack}\left[\left(Ft2^T\right)^{\langle 1\rangle}, \left(Ft2^T\right)^{\langle 2\rangle}, \left(Ft2^T\right)^{\langle 3\rangle}, \left(Ft2^T\right)^{\langle 4\rangle}, \left(Ft2^T\right)^{\langle 5\rangle}, \left(Ft2^T\right)^{\langle 6\rangle}, \left(Ft2^T\right)^{\langle 7\rangle}, \left(Ft2^T\right)^{\langle 8\rangle}, \left(Ft2^T\right)^{\langle 9\rangle}, \left(Ft2^T\right)^{\langle 10\rangle}, \left(Ft2^T\right)^{\langle 11\rangle}\right]$$

$$V2 := \text{stack}\left[\left(Fstot2^T\right)^{\langle 1\rangle}, \left(Fstot2^T\right)^{\langle 2\rangle}, \left(Fstot2^T\right)^{\langle 3\rangle}, \left(Fstot2^T\right)^{\langle 4\rangle}, \left(Fstot2^T\right)^{\langle 5\rangle}, \left(Fstot2^T\right)^{\langle 6\rangle}, \left(Fstot2^T\right)^{\langle 7\rangle}, \left(Fstot2^T\right)^{\langle 8\rangle}\right]$$

$$V2 := \text{stack}\left[V2, \left(Fstot2^T\right)^{\langle 9\rangle}, \left(Fstot2^T\right)^{\langle 10\rangle}, \left(Fstot2^T\right)^{\langle 11\rangle}\right]$$

$$M2 := \text{stack}(M2, M2, M2, M2, M2, M2, M2, M2, M2, M2, M2)$$

The "Output2" file below outputs an array from left to right starting with the element identification (ID2), Load case number (LC2), applied load on the bolt (P2), applied shear on the bolt (V2), and applied moment on the bolt (M2). See the output array example above. The array is written to a text file.

$$Output2 := \text{augment}\left(ID2, LC2, \frac{P2}{lbf}, \frac{V2}{lbf}, \frac{M2}{in \cdot lbf}\right)$$

(Note: Since the ID2 and LC2 numbers are dimensionless, the P2, V2, and M2 values are divided by their units in order to make the array dimensionless.)

Size of the "Output2" Array: $\text{rows}(Output2) = 2816$

(11 bolts x 64 load cases) x 4 joints = 2816 load cases

$$\text{WRITEPRN}(\text{"output_forces_upperipvcf_r2_abortland_fs.txt"}) := Output2$$

Bolt Fail-safe Results

$$data_fs := \text{READPRN}(\text{"output_forces_upperipvcf_r2_abortland_fs.txt"})$$

$$s := 1 .. \text{rows}(data_fs)$$

Fail-safe Loads, abort landing

Applied tensile load $P_FS_s := data_fs_{s,3} \cdot lbf$ $ID_FS_s := data_fs_{s,1}$

Applied shear load $V_FS_s := data_fs_{s,4} \cdot lbf$ $LC_FS_s := data_fs_{s,2}$

Applied bending moment $M_FS_s := data_fs_{s,5} \cdot in \cdot lbf$

Fail-safe Factors of Safety

Ultimate $SFu_FS := 1.0$

Joint Separation $SFsep_FS := 1.0$

This file uses the calculations shown in \\escfil02\2i11_mathcad\8307_bolts\ multi_bolt_stiffness_insert_FS_RevC

Fail-Safe Stiffness File

Bolt Fail-safe Load data

Joint separation load $\max(Psep_FS) = 3942.135\,lbf$

Max. load on the bolt(ultimate) $\max(Pb_FS) = 10252.6\,lbf$

Summary of fail-safe Margins for bolt:

Joint separation	$MS_minFS_{1,1} = 0.176$	Total Thread shear Ultimate	$MS_minFS_{5,1} = 0.801$
Direct Tension Ultimate	$MS_minFS_{2,1} = 2.309$	Shear Ultimate	$MS_minFS_{6,1} = 3.51$
Total Tension Ultimate	$MS_minFS_{3,1} = 0.463$	Bending Ultimate	$MS_minFS_{7,1} = 10$
Direct Thread shear Ultimate	$MS_minFS_{4,1} = 3.07$	Combined shear, tension and bending ultimate	$MS_minFS_{8,1} = 0.4592$

Determination of the smallest fail-safe margin of safety for the bolt, and the failure mode:

$MSbolt_FS := \min(MS_FS)$

$MSbolt_FS = 0.176$ Failure_Mode_FS = "Joint Separation"

$MS_min_ID = 6400203$ Element Identification (64002) and Bolt Number (3) for Minimum Margin

$MS_min_LC = 2038$ Load Case Number for Minimum Margin

$MS_min_P = 3942.1$ Applied Tensile Load for Minimum Margin

$MS_min_V = -896$ Applied Shear Load for Minimum Margin

$MS_min_M = 0$ Applied Bending Moment for Minimum Margin

Prepared By	Name G. Reyes	Date 02/27/06	Engineering and Science Contract Group *Structural Analysis Section*	File Name UI_VC_r3.mcd
Checked By	C. Bala			Draw ing No. SEG39135776
Title	Bolts from Upper Interface Plate to Vacuum Case			

Shear Pin Analysis for Upper Interface Plate to Vacuum Case

The Vacuum Case Assembly consists of four upper interface plates. Each upper interface plate has a shear pin (SDG39135755-005) installed with two bushings. The shear pin sits inside of a inner bushing SDG39135757-001 and the inner bushing sits inside of the outer bushing SDG39135757-003.

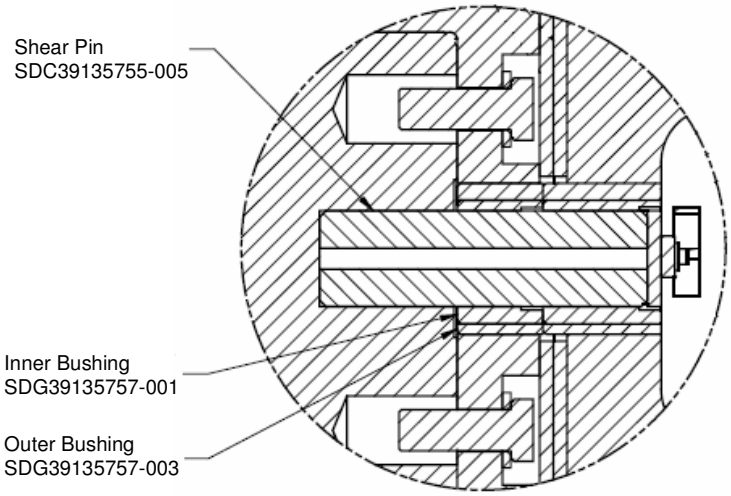

Cross Section of the Bolted Interface

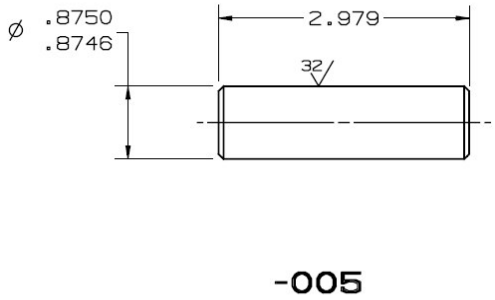

Shear Pin SDG39135755-005

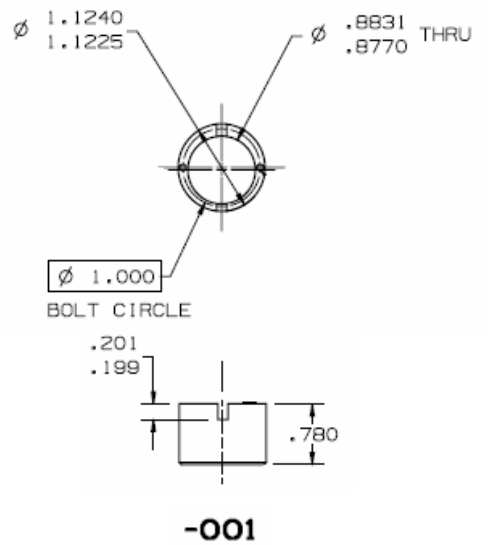

Inner Bushing SDG39135757-001

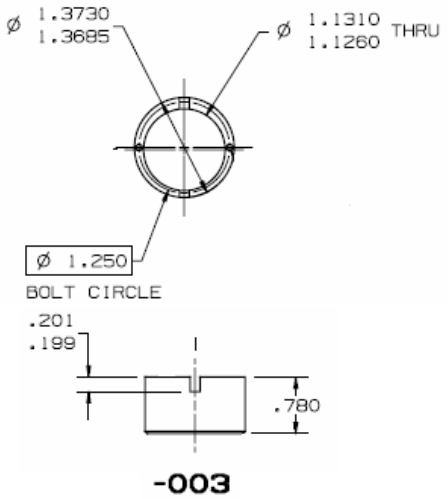

Outer Bushing SDG39135757-003

Geometry

Minimum Diameter of shear pin	$dp := 0.8746 \cdot in$	(Ref. Dwg. SDG39135755-005)
Outer diameter of outer bushing	$do := 1.3685 \cdot in$	(Ref. Dwg. SDG39135757-003)
Thickness of interface plate	$tp := 0.75 \cdot in$	(Ref. Dwg. SDG39135788)
Length of inner bushing	$tpin := 0.78 \cdot in$	(Ref. Dwg. SDG39135757-001)

Temperature Data

Shear Pin (Custom 455, H1000 bar, AMS5617):

Temperature correction factor for shear	$csp := 0.96$	(Ref. MIL-HDBK-5J, table 2.6.4.1.2)

Interface Plate (Al 7050-T7451 Plate):

Temperature correction factor for ultimate	$cpu := 0.91$	(Ref. MIL-HDBK-5J, fig. 3.7.4.2.1)
Temperature correction factor for yield	$cpy := 0.97$	

Bushings (Aluminum Bronze AMS4640, ASTM B150, alloy C63000):

Temperature correction factor for ultimate	$cbu := 0.95$	(Ref. Appendix C8)
Temperature correction factor for yield	$cby := 0.99$	

Material Properties

Shear Pin (Custom 455, H1000 bar, AMS5617):

Allowable shear stress	$Fsu := 124000 \cdot psi$	(Ref. MIL-HDBK-5J, table 2.6.4.0(b))

Interface Plate (Al 7050-T7451 Plate):

Allowable bearing stress	$Fbru := 141000 \cdot psi$ $Fbry := 104000 \cdot psi$	(Ref. MIL-HDBK-5J, table 3.7.4.0 (b1), 2.5 in. thick, e/D=2.0)

Bushings (Aluminum Bronze AMS4640, ASTM B150, alloy C63000):

Allowable bearing stress of bushing	$Fbru := 125000 \cdot psi$ $Fbry := 72000 \cdot psi$	(Ref. Appendix C8, Rockwell Materials data sheet 09.12.01.01,1.0)

Shear Pin Analysis

Loads in shear pin from Bolt Analysis (Direct Shear)

$$Fsp_j := \sqrt{(Fy_j)^2 + (Fz_j)^2}$$

$rows(Fsp) = 256$

(4 joints x 64 load cases = 256 load cases)

Shear Area of pin

$$Ash := \frac{\beta \cdot dp^2}{4}$$

$Ash = 0.601\,in^2$

Allowable shear load

$Pall := Fsu \cdot Ash \cdot csp$

$Pall = 71515.8\,lbf$

Margin of safety

$$MSp_j := \left(\frac{Pall}{Fsp_j \cdot SFu} - 1\right)$$

$min(MSp) = 1.55$

Bearing of Outer Bushing on Interface Plate

Bearing area

$Ab := do \cdot tp$

$Ab = 1.026\,in^2$

Allowable bearing load

$Pbru := Fbru \cdot Ab \cdot cpu$

$Pbru = 116750.2\,lbf$

$Pbry := Fbry \cdot Ab \cdot cpy$

$Pbry = 71682\,lbf$

Margin of safety

$$MSu_j := \frac{Pbru}{Fsp_j \cdot SFu} - 1$$

$$MSy_j := \frac{Pbry}{Fsp_j \cdot SFy} - 1$$

$min(MSu) = 3.16$

$min(MSy) = 2.25$

Bearing of Shear Pin on Inner Bushing

Bearing area $Abp := dp \cdot tpin$ $Abp = 0.682\,in^2$

Allowable bearing load $Pbrui := Fbru \cdot Abp \cdot cbu$ $Pbrui = 81009.8\,lbf$

$Pbryi := Fbry \cdot Abp \cdot cby$ $Pbryi = 48626.4\,lbf$

Margin of safety $MSbru_j := \frac{Pbrui}{Fsp_j \cdot SFu} - 1$ $MSbry_j := \frac{Pbryi}{Fsp_j \cdot SFy} - 1$

$\min(MSbru) = 1.89$

$\min(MSbry) = 1.21$

3.10.7 Lower Interface Plate to Vacuum Case Bolted Interface

Lower Interface Plate to Vacuum Case Bolted Interface

The Lower Interface Plate to Vacuum Case Bolt Analysis is performed in the following report sections.

3.10.7.1	Lower Interface Plate to Vacuum Case - .375"
3.10.7.1	Lower Interface Plate to Vacuum Case Fail-Safe - .375"
3.10.7.1	Lower Interface Plate to Vacuum Case Fail-Safe - .375" (Shear Pin Failure)
3.10.7.2	Lower Interface Plate to Vacuum Case - .500"
3.10.7.2	Lower Interface Plate to Vacuum Case Fail-Safe - .500"
3.10.7.2	Lower Interface Plate to Vacuum Case Fail-Safe - .500" (Shear Pin Failure)

3.10.7.1 Lower Interface Plate to Vacuum Case - .375"

Lower Interface Plate to Vacuum Case Bolt Analysis - 0.375" Bolts

The Vacuum Case Assembly consists of four lower interface plates. There are a total of 14 fasteners attaching the lower interface plate to the Vacuum Case. The following analysis will just include analysis of 8 of the 14 fasteners. The fasteners are NAS1956C8 and NAS1956C7 (180 ksi), 0.375-24 UNJF. Fastener NAS1956C8 will experience a higher load and therefore the following bolt analysis will assume that all bolts are NAS1956C8. There is also one shear pin 0.875" in diameter. The drawing number for the Vacuum Case Assembly is SEG39135776.

Bolt Geometry

$$bolt := \begin{array}{c} \begin{array}{cc} \text{size} & \text{thread/in} \end{array} \\ \begin{pmatrix} 0.375 & 24 \\ 0.375 & 24 \\ 0.50 & 20 \\ 0.375 & 24 \\ 0.375 & 24 \\ 0.375 & 24 \\ 0.50 & 20 \\ 0.50 & 20 \\ 0.375 & 24 \\ 0.375 & 24 \\ 0.375 & 24 \\ 0.50 & 20 \\ 0.50 & 20 \\ 0.50 & 20 \end{pmatrix} \end{array}$$

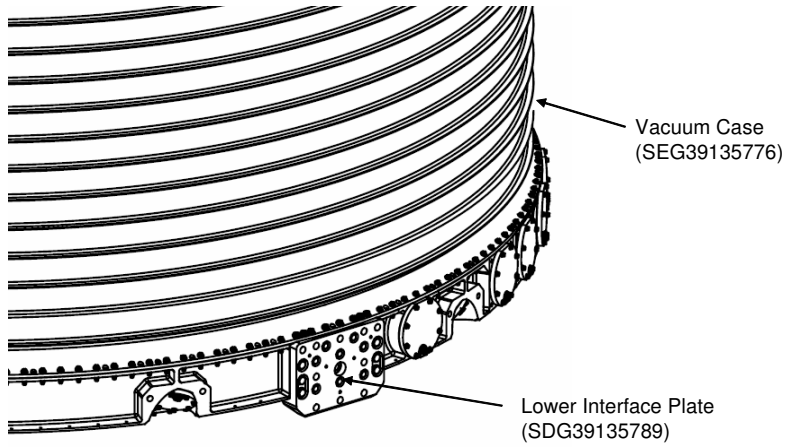

Side View of Vacuum Case (VC) Assembly

$i := 1 .. rows(bolt)$

$N_i := bolt_{i,2} \cdot \frac{1}{in}$ pitch of bolt

$D_i := bolt_{i,1} \cdot in$ bolt diameter

$At_i := \beta \cdot \left(\frac{D_i - 0.9743 \cdot \frac{1}{N_i}}{2} \right)^2$ Tensile Area of bolt

$As_i := \beta \cdot \left(\frac{D_i - 1.299038 \cdot \frac{1}{N_i}}{2} \right)^2$ Shear Area of bolt

Prepared By	Name	Date		File Name
	G. Reyes	03/02/06		LI_VC_375.mcd
Checked By	C. Bala		**Engineering and Science Contract Group** *Structural Analysis Section*	Draw ing No. SEG39135776
Title	Bolts from Lower Interface Plate to Vacuum Case - 0.375" Bolts			

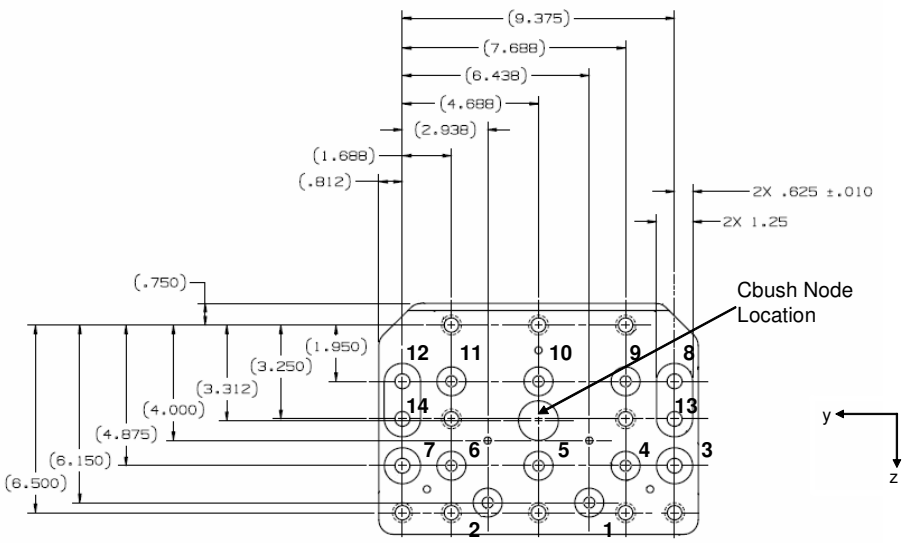

Lower Interface Plate to Vacuum Case Bolt Pattern

Bolt no.	x co-ord	y co-ord	z co-ord
1	0.0	−1.75	2.838
2	0.0	1.75	2.838
3	0.0	−4.688	1.563
4	0.0	−3.0	1.563
5	0.0	0.0	1.563
6	0.0	3.0	1.563
7	0.0	4.688	1.563
8	0.0	−4.688	−1.362
9	0.0	−3.0	−1.362
10	0.0	0.0	−1.362
11	0.0	3.0	−1.362
12	0.0	4.688	−1.362
13	0.0	−4.688	−0.062
14	0.0	4.688	−0.062

$$x := \begin{pmatrix} 0.0 \\ 0.0 \\ 0.0 \\ 0.0 \\ 0.0 \\ 0.0 \\ 0.0 \\ 0.0 \\ 0.0 \\ 0.0 \\ 0.0 \\ 0.0 \\ 0.0 \\ 0.0 \end{pmatrix} \cdot in \qquad y := \begin{pmatrix} -1.75 \\ 1.75 \\ -4.688 \\ -3.0 \\ 0.0 \\ 3.0 \\ 4.688 \\ -4.688 \\ -3.0 \\ 0.0 \\ 3.0 \\ 4.688 \\ -4.688 \\ 4.688 \end{pmatrix} \cdot in \qquad z := \begin{pmatrix} 2.838 \\ 2.838 \\ 1.563 \\ 1.563 \\ 1.563 \\ 1.563 \\ 1.563 \\ -1.362 \\ -1.362 \\ -1.362 \\ -1.362 \\ -1.362 \\ -0.062 \\ -0.062 \end{pmatrix} \cdot in$$

In this analysis, only the 0.375" bolts will be analyzed. These bolts correspond to bolt no. 1, 2, 4, 5, 6, 9, 10, and 11. Refer to bolt geometry in previous page.

Location of applied forces and moments

$xforce := 0.0in \qquad yforce := 0.0in \qquad zforce := 0.0in$

$$cgload := \begin{pmatrix} xforce \\ yforce \\ zforce \end{pmatrix} \qquad cgload = \begin{pmatrix} 0 \\ 0 \\ 0 \end{pmatrix} in$$

Center of gravity of bolt group

$$xcg := \frac{\sum_i x_i}{rows(x)} \qquad xcg = 0\,in \qquad ycg := \frac{\sum_i y_i}{rows(y)} \qquad ycg = 0\,in \qquad zcg := \frac{\sum_i z_i}{rows(z)} \qquad zcg = 0.468\,in$$

$$cg_{bolt} := \begin{pmatrix} xcg \\ ycg \\ zcg \end{pmatrix} \qquad cg_{bolt} = \begin{pmatrix} 0 \\ 0 \\ 0.468 \end{pmatrix} in$$

Note: Since the x direction is into the plate the loads are shared equally between the bolts. In the z direction the bolt pattern is unsymmetric and has a 0.468" offset from the center of gravity.

Load Vector

$$r_{load} := cgload - cg_{bolt} \qquad r_{load} = \begin{pmatrix} 0 \\ 0 \\ -0.468 \end{pmatrix} in$$

Distance from CG of Bolts to Individual Bolts for shear calculations

$$r_i := \sqrt{(z_i - zcg)^2 + (y_i - ycg)^2}$$

$$r = \begin{pmatrix} 2.946 \\ 2.946 \\ 4.814 \\ 3.193 \\ 1.095 \\ 3.193 \\ 4.814 \\ 5.033 \\ 3.514 \\ 1.830 \\ 3.514 \\ 5.033 \\ 4.718 \\ 4.718 \end{pmatrix} in$$

Loads model 2-04 was used to retrieve loads at the four bolted interfaces. A Cbush element located at the center of each interface plate was post processed in NASPOST for forces and moments in the x, y, and z directions. The Cbush element identifications for the four bolted interfaces are 64011, 64012, 64013, and 64014. These loads are read into an array and distributed out to the 14 bolts for each interface plate.

(Note: This joint was checked for minimum margins of safety for launch, nominal landing, and abort landing load cases. The abort landing cases combined with abort landing temperature data resulted in the lowest minimum margins of safety. Therefore, the abort landing cases are used in this analysis.)

Reading database file for bolted joint, abort landing case

$data := READPRN("lower_ipvcf_r2_abortland.txt")$

$num_bolts := rows(bolt)$

$j := 1..rows(data)$

Loads from 2-04 loads model, abort landing case

Axial Load $Fx_j := data_{j,3} \cdot lbf$

Shear in Y axis $Fy_j := data_{j,4} \cdot lbf$

Shear in Z axis $Fz_j := data_{j,5} \cdot lbf$

Torsion $Mx_j := data_{j,6} \cdot in \cdot lbf$

Moment about Y axis $My_j := data_{j,7} \cdot in \cdot lbf$

Moment about Z axis $Mz_j := data_{j,8} \cdot in \cdot lbf$

Element Identification $ID_j := data_{j,1}$

$ID_j := ID_j \cdot 1000 + 1$ Counter for number of bolts in pattern

Load Case Number $LC_j := data_{j,2}$

Applied Bending Moment at Bolts $M_j := 0 \cdot in \cdot lbf$

Format of Output File

The stack commands below are used to stack the element identifications (ID) and load cases (LC) in ascending order per bolt. The element ID number is located in the first column and the LC numbers in the second column. For each element identification, 64011, 64012, 64013, and 64014, the bolt number within the bolt pattern is added to the end of each element identification. For example, the element identification number 64001 will have bolt numbers 001 thru 002, 004 thru 006, and 009 thru 011 attached to the end for all 64 load cases. This brings the total number of load cases to 2048 (4 joints x 8 (3/8" bolts) x 64 load cases = 2048) since only 8 of the bolts will be analyzed. See the array example to the right.

$ID := stack(ID, ID+1, ID+3, ID+4, ID+5, ID+8, ID+9, ID+10)$

$LC := stack(LC, LC, LC, LC, LC, LC, LC, LC)$

$$\begin{array}{cc} ID & LC \\ \end{array}$$
$$\begin{bmatrix} 64011001 & 2001 \\ 64011001 & 2002 \\ \ldots & \ldots \\ 64011001 & 2064 \\ 64011002 & 2001 \\ 64011002 & 2002 \\ \ldots & \ldots \\ 64011002 & 2064 \\ \ldots & \ldots \\ \ldots & \ldots \\ 64011011 & 2001 \\ 64011011 & 2002 \\ \ldots & \ldots \\ 64011011 & 2064 \end{bmatrix}$$

Array Example

Moment Distribution

$$M_{tot}^{\langle j \rangle} := \begin{pmatrix} Mx_j \\ My_j \\ Mz_j \end{pmatrix} + r_{load} \times \begin{pmatrix} Fx_j \\ Fy_j \\ Fz_j \end{pmatrix}$$

Use the cross-product to determine the additional moments acting on the fasteners.

$Mx_boltcg_j := M_{tot_{1,j}}$ $\quad$ $My_boltcg_j := M_{tot_{2,j}}$ $\quad$ $Mz_boltcg_j := M_{tot_{3,j}}$

Tension on bolts

$$Ftdirect_{i,j} := \begin{cases} 0 \cdot lbf & \text{if } Fx_j \le 0lbf \\ \dfrac{Fx_j}{num_bolts} & \text{otherwise} \end{cases}$$

Direct tensile load calculation - (The if statement checks for compression)

$$Fmz_{i,j} := \begin{cases} 0 \cdot lbf & \text{if } (y_i - ycg) = 0 \cdot in \\ \dfrac{\left[Mz_boltcg_j \cdot (y_i - ycg)\right] At_i}{\sum_i \left[(y_i - ycg)^2 \cdot At_i\right]} & \end{cases}$$

$$Fmy_{i,j} := \begin{cases} 0 \cdot lbf & \text{if } (z_i - zcg) = 0 \cdot in \\ \dfrac{My_boltcg_j \cdot (z_i - zcg) \cdot At_i}{\sum_i \left[\left(\left|z_i - zcg\right|\right)^2 \cdot At_i\right]} & \end{cases}$$

$$Ft_{i,j} := Ftdirect_{i,j} + Fmz_{i,j} + Fmy_{i,j}$$

Total tensile load

Shear on bolts

Secondary shear on bolts $\quad Fs_{i,j} := \dfrac{Mx_boltcg_j \cdot r_i \cdot As_i}{\sum_i \left[(r_i)^2 \cdot (As_i)\right]}$ $\quad$ Total shear load $\quad Fstot_{i,j} := Fs_{i,j}$

(Note : The direct shear is taken by the shear pin.)

The stack commands below are used to stack applied axial load (P), applied shear load (V), and applied moment (M) in ascending order per bolt. These loads are put into an array with the element/bolt number and load case number from above. See the "Output" file below.

$$P := \text{stack}\left[\left(Ft^T\right)^{\langle 1\rangle}, \left(Ft^T\right)^{\langle 2\rangle}, \left(Ft^T\right)^{\langle 4\rangle}, \left(Ft^T\right)^{\langle 5\rangle}, \left(Ft^T\right)^{\langle 6\rangle}, \left(Ft^T\right)^{\langle 9\rangle}, \left(Ft^T\right)^{\langle 10\rangle}, \left(Ft^T\right)^{\langle 11\rangle}\right]$$

$$V := \text{stack}\left[\left(Fstot^T\right)^{\langle 1\rangle}, \left(Fstot^T\right)^{\langle 2\rangle}, \left(Fstot^T\right)^{\langle 4\rangle}, \left(Fstot^T\right)^{\langle 5\rangle}, \left(Fstot^T\right)^{\langle 6\rangle}, \left(Fstot^T\right)^{\langle 9\rangle}, \left(Fstot^T\right)^{\langle 10\rangle}, \left(Fstot^T\right)^{\langle 11\rangle}\right]$$

$$M := \text{stack}(M, M, M, M, M, M, M, M)$$

The "Output" file below outputs an array from left to right starting with the element identification (ID), load case number (LC), applied load on the bolt (P), applied shear on the bolt (V), and applied moment on the bolt (M). See the output array example below. The array is then written to a text file.

$$\text{Output} := \text{augment}\left(ID, LC, \frac{P}{lbf}, \frac{V}{lbf}, \frac{M}{in \cdot lbf}\right)$$

(Note: Since the ID and LC numbers are dimensionless, the P, V, and M values are divided by their units in order to make the array dimensionless.)

$$\begin{array}{ccccc} ID & LC & P & V & M \end{array}$$
$$\begin{bmatrix} 64011001 & 2001 & -1038.145 & -76.062 & 0 \\ 64011001 & 2002 & -1010.549 & -73.512 & 0 \\ \ldots & \ldots & \ldots & \ldots & \ldots \\ 64011001 & 2064 & 622.985 & -532.722 & 0 \\ 64011002 & 2001 & -968.239 & -76.062 & 0 \\ 64011002 & 2002 & -973.376 & -73.512 & 0 \\ \ldots & \ldots & \ldots & \ldots & \ldots \\ 64011002 & 2064 & 669.148 & -532.722 & 0 \\ \ldots & \ldots & \ldots & \ldots & \ldots \\ \ldots & \ldots & \ldots & \ldots & \ldots \\ 64011011 & 2001 & 834.805 & -90.74 & 0 \\ 64011011 & 2002 & 798.073 & -87.699 & 0 \\ \ldots & \ldots & \ldots & \ldots & \ldots \\ 64011011 & 2064 & 717.04 & -635.529 & 0 \end{bmatrix}$$

Example of Output Array

Size of the "Output" Array: $\text{rows}(\text{Output}) = 2048$

(8 (3/8"bolts) x 64 load cases) x 4 joints = 2048 load cases

(Note: The output array to the left is an example of the array format. The loads in this example are for format purposes only and should NOT be used in this analysis.)

WRITEPRN("output_forces_loweripvcf_r2_abortland.txt") := Output

CHECK BOLTS (NAS1956C8 0.375-24UNJF-3A, Material-A-286), Insert MS51832CA-204L , Washer NAS1587-6C

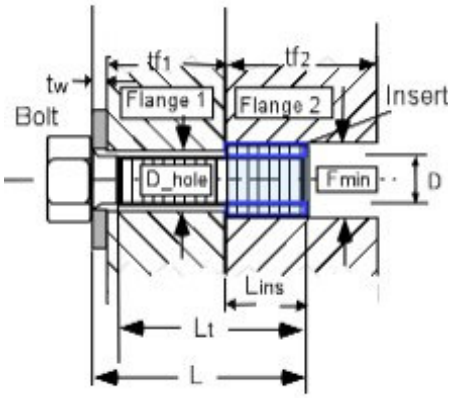

The array from the text file above is read:

data := READPRN("output_forces_loweripvcf_r2_abortland.txt")

$s := 1 .. rows(data)$

Flange 1: Lower Interface Plate
Part number: SEG39135789
Material: 7050-T7451

Flange 2: Lower Support Ring Assy
Part number: SEG39135787
Material: 7050-T7451

Loads from Abort Landing Load Cases

Applied tensile load $P_s := data_{s,3} \cdot lbf$

Applied shear load $V_s := data_{s,4} \cdot lbf$

Applied bending moment $M_s := data_{s,5} \cdot in \cdot lbf$

Element Identification $ID_s := data_{s,1}$

Load case number $LC_s := data_{s,2}$

Factors of Safety

Ultimate $SFu := 1.4$

Yield $SFy := 1.1$

Joint Separation $SFsep := 1.2$

Fitting factor $FF := 1.15$

Temperature Data (Ref Appendix C2), Abort Landing Case

Assembly $Temp_initial := 70 \cdot deg$

Maximum $Temp_max := 150 \cdot deg$

Minimum $Temp_min := 40 \cdot deg$

Bolt and Insert Data

Nominal diameter of bolt $D := 0.375 \cdot in$

Number of threads/inch $Nt := 24 \cdot \frac{1}{in}$

Total length of bolt $L := 1.078 \cdot in$

Length of insert $Lins := 0.500 \cdot in$

Threaded length $Lt := 0.578 \cdot in$

Min. external diameter of insert $Fmin := 0.551 \cdot in$

(If bolt is fully threaded, input Lt = L)

Depth of recess for insert $lr := 0.02 \cdot in$

This file uses the calculations shown in \\escfil02\2i11_mathcad\8307_bolts\thread_data.mcd

Prepared By	Name	Date		File Name
	G. Reyes	03/02/06		LI_VC_375.mcd
Checked By	C. Bala		**Engineering and Science Contract Group** *Structural Analysis Section*	Draw ing No. SEG39135776
Title	Bolts from Lower Interface Plate to Vacuum Case - 0.375" Bolts			

Washer Data

Thickness of washer $tw := 0.078 \cdot in$

Outer Diameter of washer $Dw := .687in$

Inner Diameter of washer $Dwi := 0.378 \cdot in$

Bolt head dia. across flats $dw := 0.523 \cdot in$ (used only if there is no washer)

Flange data

Thickness of flange 1 (Ref. SDG39135789) $tf1 := .410 \cdot in$

Thickness of flange 2 $tf2 := .500in$ (Length of insert)

Diameter of hole (Ref. SDG39135789) $D_hole := 0.386 \cdot in$

Note: If there is no washer, tw, Dw, and Dwi should be zero.

Material Property Data

Bolt

Temperature correction factor for bolt strength ultimate (Ref. MIL-HDBK-5J, fig. 6.2.1.1.1) $TSu_bolt := .97$ yield $TSy_bolt := .97$

Bolt ultimate tensile allowable stress $Ftu_bolt := 180000 \cdot psi$ (Ref. NAS1956)

Bolt ultimate shear allowable stress $Fsu_bolt := 0.6 \cdot Ftu_bolt$

Bolt yield tensile allowable $Fty_bolt := 132353 \cdot psi$ (Ref. Appendix C10)

Temperature correction factor for bolt modulus $TE_bolt := .98$ (Ref. MIL-HDBK-5J, fig. 6.2.1.1.4(a))

Modulus of elasticity of bolt $E_bolt := \left(29.1 \cdot 10^{6} \cdot psi\right)$ (Ref. MIL-HDBK-5J, table 6.2.1.0(b))

Thermal coefficient for bolt: $u_bolt_hot := 9.1 \cdot 10^{-6} \cdot \frac{\frac{in}{in}}{deg}$ $u_bolt_cold := 8.9 \cdot 10^{-6} \cdot \frac{\frac{in}{in}}{deg}$

(Ref. MIL-HDBK-5J, fig. 6.2.1.0)

Insert

Temperature correction factor for insert strength $TS_ins := .97$ (Ref. MIL-HDBK-5J, fig. 6.2.1.1.1)

Ultimate tensile allowable stress $Ftu_ins := 140000 \cdot psi$ (Ref. MS51832)

Ultimate shear allowable stress $Fsu_ins := 0.6 \cdot Ftu_ins$

Washer

Temperature correction factor for washer modulus $TE_washer := .97$ (Ref. MIL-HDBK-5J, fig. 6.2.1.1.1)

Modulus of elasticity of washer $E_washer := \left(29.1 \cdot 10^{6} \cdot psi\right)$ (Ref. MIL-HDBK-5J, table 6.2.1.0(b))

Flanges (Mechanical Properties shall meet the requirements of AMS 4108)

Stiffness of the joint depends upon number of members in the grip of the fasteners, Modulus of elasticity of these members, and diameters of the bolt and the washer.

Temperature correction factor for flange 1 $Tf1E := .98$ (modulus) (Ref. MIL-HDBK-5J, fig. 3.7.6.1.4 and Appendix C9)

Temperature correction factor for flange 2 $Tf2E := .98$ (modulus)

$Tf2s := .97$ (strength) (Ref. MIL-HDBK-5J, fig. 3.7.4.2.1)

Shear strength allowable for flanges $Fsu_f2 := 42000 \cdot psi$ (Ref. MIL-HDBK-5J, table 3.7.4.0(d))

Modulus of elasticity for the parts in the joint (Ref. MIL-HDBK-5J, table 3.7.4.0(d))

$E_flange1 := \left(10.2 \cdot 10^{6} \cdot psi\right)$ $E_flange2 := \left(10.2 \cdot 10^{6} \cdot psi\right)$

Coefficient of thermal expansion for flanges (Ref. MIL-HDBK-5J, table 3.7.4.0(d) and Appendix C9)

$u_flange1_hot := 12.8 \cdot 10^{-6} \cdot \frac{\frac{in}{in}}{deg}$ $u_flange2_hot := 12.8 \cdot 10^{-6} \cdot \frac{\frac{in}{in}}{deg}$

$u_flange1_cold := 12.1 \cdot 10^{-6} \cdot \frac{\frac{in}{in}}{deg}$ $u_flange2_cold := 12.1 \cdot 10^{-6} \cdot \frac{\frac{in}{in}}{deg}$

Torque/Preload data

Maximum torque (62% of yield) $Tmax := 405 \cdot in \cdot lbf$

Minimum torque (95% of max. torque) $Tmin := 384.75 \cdot in \cdot lbf$

Torque coefficient: $k := 0.15$

Loading plane factor: $n := .5$

Preload Uncertainty: $:= 0.25$

This file uses the calculations shown in \\escfil02\2i11_mathcad\8307_bolts\multi_bolt_stiffness_insert_RevC

Insert Stiffness File

Prepared By	Name	Date	Engineering and Science Contract Group	File Name
	G. Reyes	03/02/06		LI_VC_375.mcd
Checked By	C. Bala		*Structural Analysis Section*	Drawing No. SEG39135776
Title	Bolts from Lower Interface Plate to Vacuum Case - 0.375" Bolts			

Bolt Load data

Bolt/joint stiffness factor	$= = 0.374$	Preload due to temperature	$Pthr_pos = 652.9\,lbf$
Max. preload	$PLDmax = 9652.9\,lbf$		$Pthr_neg = -211.8\,lbf$
Min. preload	$PLDmin = 4468.2\,lbf$	Uncertainty factor	$= 0.25$
Joint separation load	$max(Psep) = 1651.094\,lbf$	Torque coefficient	$k = 0.15$
Max. load on the bolt(ultimate)	$max(Pb) = 10066.9\,lbf$	Loading plane factor	$n = 0.5$
Max. load on the bolt(yield)	$max(Pby) = 9978.2\,lbf$	Thread shear pullout load of bolt or insert	$Pths = 25380.5\,lbf$
Bolt ultimate tensile strength	$PAt = 15003.1\,lbf$	Thread shear pullout load in parent metal	$Ppths = 17630.4\,lbf$

Length_check = "Bolt length is sufficient"

Summary of Margins for bolt:

Joint separation	$MS_min_{1,1} = 1.894$	Direct Thread shear Ultimate	$MS_min_{6,1} = 6.959$
Direct Tension Ultimate	$MS_min_{2,1} = 5.773$	Total Thread shear Ultimate	$MS_min_{7,1} = 0.751$
Direct Tension Yield	$MS_min_{3,1} = 5.338$	Shear Ultimate	$MS_min_{8,1} = 3.52$
Total Tension Ultimate	$MS_min_{4,1} = 0.490$	Bending Ultimate	$MS_min_{9,1} = 10$
Total Tension Yield	$MS_min_{5,1} = 0.106$	Combined shear, tension and bending ultimate	$MS_min_{10,1} = 0.479$

Determination of the smallest margin of safety for the bolt, and the failure mode:

$MSbolt := min(MS)$

$MSbolt = 0.106$ Failure_Mode = "Total Tension Yield"

$MS_min_ID = 64011011$	Element Identification (64011) and Bolt Number (11) for Minimum Margin
$MS_min_LC = 2049$	Load Case Number for Minimum Margin
$MS_min_P = 1375.9$	Applied Tensile Load for Minimum Margin
$MS_min_V = 136.2$	Applied Shear Load for Minimum Margin
$MS_min_M = 0$	Applied Bending Moment for Minimum Margin

Fail-Safe Analysis for Lower Interface Plate to Vacuum Case (Shear Pin Failure)

This portion of the analysis assumes a failure in the shear pin. The shear pin part number is SDG39135755-001. All 8 NAS1956 3/8" fasteners will take the direct shear load.

Direct shear Loads $Fsd_{i,j} := \frac{\sqrt{(Fy_j)^2 + (Fz_j)^2}}{num_bolts}$

Total shear load $Fstot_{i,j} := Fs_{i,j} + Fsd_{i,j}$

(Note: The Fs variable is the secondary shear and has been calculated previously in the analysis.)

The stack command below is used to stack the applied shear load (V) in ascending order per bolt. The applied axial load (P) and applied moment (M) are stacked above and reused in the output file below. These loads are put into an array with the element/bolt number and load case number from above.

$$V := stack\left[(Fstot^T)^{\langle 1\rangle}, (Fstot^T)^{\langle 2\rangle}, (Fstot^T)^{\langle 4\rangle}, (Fstot^T)^{\langle 5\rangle}, (Fstot^T)^{\langle 6\rangle}, (Fstot^T)^{\langle 9\rangle}, (Fstot^T)^{\langle 10\rangle}, (Fstot^T)^{\langle 11\rangle}\right]$$

The "Output" file below outputs an array from left to right starting with the element identification (ID), Load case number (LC), applied load on the bolt (P), applied shear on the bolt (V), and applied moment on the bolt (M). The array is written to a text file. For the format of the array see the output example array above.

$$Output := augment\left(ID, LC, \frac{P}{lbf}, \frac{V}{lbf}, \frac{M}{in \cdot lbf}\right)$$

(Note: Since the ID and LC numbers are dimensionless, the P, V, and M values are divided by their units in order to make the array dimensionless.)

Size of the "Output" Array: $rows(Output) = 2048$

(8 (3/8"bolts) x 64 load cases) x 4 joints = 2048 load cases

WRITEPRN("output_forces_loweripvcf_r2_abortland_pinfs.txt") := Output

Fail-safe Analysis (Shear Pin Failure)

data_fsp := READPRN("output_forces_loweripvcf_r2_abortland_pinfs.txt")

$s := 1 .. rows(data_fsp)$

Prepared By	Name	Date	Engineering and Science Contract Group	File Name
	G. Reyes	03/02/06		LI_VC_375.mcd
Checked By	C. Bala		*Structural Analysis Section*	Draw ing No. SEG39135776
Title	Bolts from Lower Interface Plate to Vacuum Case - 0.375" Bolts			

Fail-safe Loads, abort landing

Applied tensile load $P_FS_s := data_fsp_{s,3} \cdot lbf$ $ID_FS_s := data_fsp_{s,1}$

Applied shear load $V_FS_s := data_fsp_{s,4} \cdot lbf$ $LC_FS_s := data_fsp_{s,2}$

Applied bending moment $M_FS_s := data_fsp_{s,5} \cdot in \cdot lbf$

Fail-safe Factors of Safety

Ultimate $SFu_FS := 1.0$

Joint Separation $SFsep_FS := 1.0$

This file uses the calculations shown in \\escfil02\2i11_mathcad\8307_bolts\ multi_bolt_stiffness_insert_FS_RevC

Bolt Fail-safe Load data

Joint separation load $\max(Psep_FS) = 1375.912\,lbf$

Max. load on the bolt(ultimate) $\max(Pb_FS) = 9948.6\,lbf$

Summary of fail-safe Margins for bolt:

Joint separation	$MS_minFS_{1,1} = 2.473$	Total Thread shear Ultimate	$MS_minFS_{5,1} = 0.772$
Direct Tension Ultimate	$MS_minFS_{2,1} = 8.482$	Shear Ultimate	$MS_minFS_{6,1} = 2.91$
Total Tension Ultimate	$MS_minFS_{3,1} = 0.508$	Bending Ultimate	$MS_minFS_{7,1} = 10$
Direct Thread shear Ultimate	$MS_minFS_{4,1} = 10$	Combined shear, tension and bending ultimate	$MS_minFS_{8,1} = 0.4845$

Determination of the smallest fail-safe margin of safety for the bolt, and the failure mode:

$MSbolt_FS := \min(MS_FS)$

$MSbolt_FS = 0.485$ Failure_Mode_FS = "Combined Shear Tension Bending Ultimate"

$MS_min_ID = 64012009$	Element Identification (64012) and Bolt Number (9) for Minimum Margin
$MS_min_LC = 2011$	Load Case Number for Minimum Margin
$MS_min_P = 809.4$	Applied Tensile Load for Minimum Margin
$MS_min_V = 1881.9$	Applied Shear Load for Minimum Margin
$MS_min_M = 0$	Applied Bending Moment for Minimum Margin

Prepared By	Name	Date		File Name
	G. Reyes	03/02/06		LI_VC_375.mcd
Checked By	C. Bala		**Engineering and Science Contract Group** *Structural Analysis Section*	Draw ing No. SEG39135776
Title	Bolts from Lower Interface Plate to Vacuum Case - 0.375" Bolts			

Bolt Fail-Safe Analysis for Lower Interface Plate to Vacuum Case - 0.375" Bolts

Since bolt number 11 has the lowest margin of safety it is assumed that this bolt will be the first bolt to fail. There are now 7, NAS1956C8 0.375-24 UNJF fasteners, holding the lower interface plate to the Vacuum Case. The drawing number for the Vacuum Case Assembly is SEG39135776.

$$bolt2 := \begin{array}{c} \begin{array}{cc} \text{size} & \text{thread/in} \end{array} \\ \begin{pmatrix} 0.375 & 24 \\ 0.375 & 24 \\ 0.50 & 20 \\ 0.375 & 24 \\ 0.375 & 24 \\ 0.375 & 24 \\ 0.50 & 20 \\ 0.50 & 20 \\ 0.375 & 24 \\ 0.375 & 24 \\ 0.50 & 20 \\ 0.50 & 20 \\ 0.50 & 20 \end{pmatrix} \end{array}$$

$$s := 1 .. rows(bolt2)$$

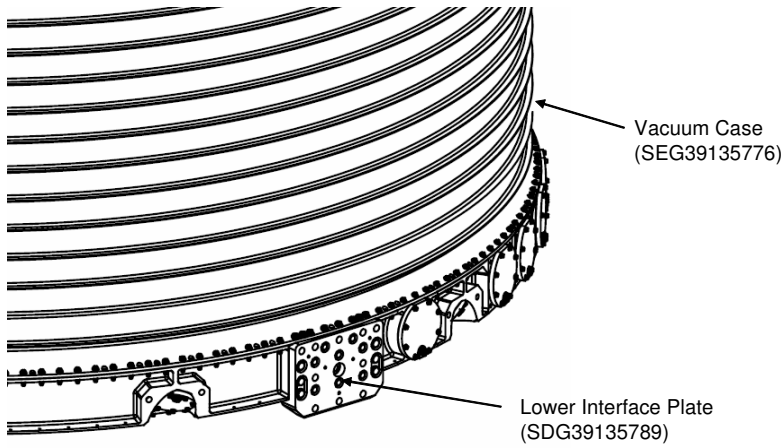

Side View of Vacuum Case (VC)

$N2_s := bolt2_{s,2} \cdot \frac{1}{in}$ pitch of bolt

$D2_s := bolt2_{s,1} \cdot in$ bolt diameter

$At2_s := \beta \cdot \left(\frac{D2_s - 0.9743 \cdot \frac{1}{N2_s}}{2} \right)^2$ Tensile Area of bolt

$As2_s := \beta \cdot \left(\frac{D2_s - 1.299038 \cdot \frac{1}{N2_s}}{2} \right)^2$ Shear Area of bolt

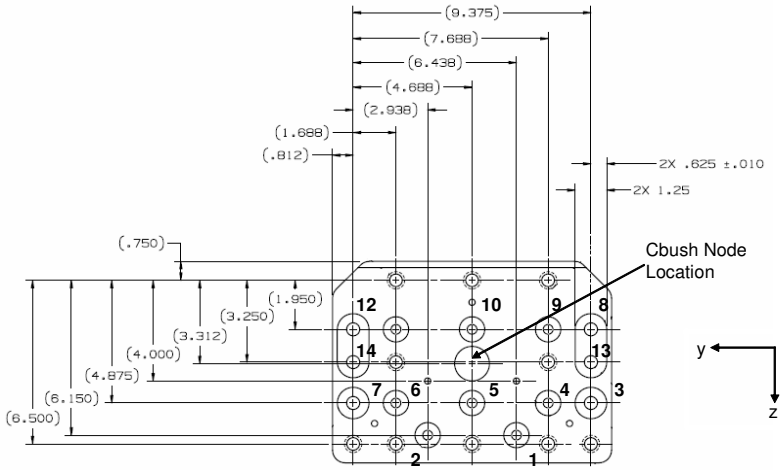

Lower Interface Plate to Vacuum Case Bolt Pattern for Fail-Safe Analysis

Bolt no.	x co-ord	y co-ord	z co-ord
1	0.0	−1.75	2.838
2	0.0	1.75	2.838
3	0.0	−4.688	1.563
4	0.0	−3.0	1.563
5	0.0	0.0	1.563
6	0.0	3.0	1.563
7	0.0	4.688	1.563
8	0.0	−4.688	−1.362
9	0.0	−3.0	−1.362
10	0.0	0.0	−1.362
12	0.0	4.688	−1.362
13	0.0	−4.688	−0.062
14	0.0	4.688	−0.062

$$x2 := \begin{pmatrix} 0.0 \\ 0.0 \\ 0.0 \\ 0.0 \\ 0.0 \\ 0.0 \\ 0.0 \\ 0.0 \\ 0.0 \\ 0.0 \\ 0.0 \\ 0.0 \\ 0.0 \\ 0.0 \end{pmatrix} \cdot in \qquad y2 := \begin{pmatrix} -1.75 \\ 1.75 \\ -4.688 \\ -3.0 \\ 0.0 \\ 3.0 \\ 4.688 \\ -4.688 \\ -3.0 \\ 0.0 \\ 4.688 \\ -4.688 \\ 4.688 \end{pmatrix} \cdot in \qquad z2 := \begin{pmatrix} 2.838 \\ 2.838 \\ 1.563 \\ 1.563 \\ 1.563 \\ 1.563 \\ 1.563 \\ -1.362 \\ -1.362 \\ -1.362 \\ -1.362 \\ -0.062 \\ -0.062 \end{pmatrix} \cdot in$$

Location of applied forces and moments

$xforce2 := 0.0in \qquad yforce2 := 0.0in \qquad zforce2 := 0.0in$

$$cgload2 := \begin{pmatrix} xforce2 \\ yforce2 \\ zforce2 \end{pmatrix} \qquad cgload2 = \begin{pmatrix} 0 \\ 0 \\ 0 \end{pmatrix} in$$

Center of gravity of bolt group

$$xcg2 := \frac{\sum_s x2_s}{rows(x2)} \qquad xcg = 0\,in \qquad ycg2 := \frac{\sum_s y2_s}{rows(y2)} \qquad ycg2 = -0.231\,in \qquad zcg2 := \frac{\sum_s z2_s}{rows(z2)} \qquad zcg2 = 0.609\,in$$

$$cg_{bolt2} := \begin{pmatrix} xcg2 \\ ycg2 \\ zcg2 \end{pmatrix} \qquad cg_{bolt2} = \begin{pmatrix} 0 \\ -0.231 \\ 0.609 \end{pmatrix} in$$

Note: Since the x direction is into the plate the loads are shared equally between the bolts. However, due to a failure in bolt 11, the y and z directions in the bolt pattern are unsymmetric and have offsets from the center of gravity.

Load Vector

$$r_{load2} := cgload2 - cg_{bolt2} \qquad r_{load2} = \begin{pmatrix} 0 \\ 0.231 \\ -0.609 \end{pmatrix} in$$

Distance from CG of Bolts to Individual Bolts for shear calculations

$$r2_s := \sqrt{\left(z2_s - zcg2\right)^2 + \left(y2_s - ycg2\right)^2}$$

$$r2 = \begin{pmatrix} 2.697 \\ 2.982 \\ 4.558 \\ 2.929 \\ 0.981 \\ 3.369 \\ 5.010 \\ 4.874 \\ 3.399 \\ 1.985 \\ 5.299 \\ 4.507 \\ 4.964 \end{pmatrix} \text{in}$$

Reading database file for bolted joint, abort landing case

data := READPRN("lower_ipvcf_r2_abortland.txt")

$q := 1 .. \text{rows}(data)$

$num_bolts2 := \text{rows}(bolt2)$

Loads from 2-04 loads model, abort landing case

Axial Load $Fx2_q := data_{q,3} \cdot lbf$

Shear in Y axis $Fy2_q := data_{q,4} \cdot lbf$

Shear in Z axis $Fz2_q := data_{q,5} \cdot lbf$

Torsion $Mx2_q := data_{q,6} \cdot in \cdot lbf$

Moment about Y axis $My2_q := data_{q,7} \cdot in \cdot lbf$

Moment about Z axis $Mz2_q := data_{q,8} \cdot in \cdot lbf$

Element Identification $ID2_q := data_{q,1}$

$ID2_q := ID2_q \cdot 1000 + 1$ Counter for number of bolts in pattern

Load Case Number $LC2_q := data_{q,2}$

Applied Bending Moment at Bolts $M2_q := 0 \cdot in \cdot lbf$

Format of Output File

The stack command below is used to stack the element identifications (ID2) and load cases (LC2) in ascending order per bolt. See the array example above for explanation. Note: bolt number 11 is not included.

$ID2 := \text{stack}(ID2, ID2 + 1, ID2 + 3, ID2 + 4, ID2 + 5, ID2 + 8, ID2 + 9)$

$LC2 := \text{stack}(LC2, LC2, LC2, LC2, LC2, LC2, LC2)$

Moment Distribution

$$M_{tot2}^{\langle q \rangle} := \begin{pmatrix} Mx2_q \\ My2_q \\ Mz2_q \end{pmatrix} + r_{load} \times \begin{pmatrix} Fx2_q \\ Fy2_q \\ Fz2_q \end{pmatrix}$$

Use the cross-product to determine the additional moments acting on the fasteners.

$Mx_boltcg2_q := M_{tot2_{1,q}}$ $\quad My_boltcg2_q := M_{tot2_{2,q}}$ $\quad Mz_boltcg2_q := M_{tot2_{3,q}}$

Tension on bolts

$$Ftdirect2_{s,q} := \begin{cases} 0 \cdot lbf & \text{if } Fx2_q \le 0lbf \\ \dfrac{Fx2_q}{num_bolts2} & \text{otherwise} \end{cases}$$

Direct tensile load calculation

$$Fmz2_{s,q} := \begin{cases} 0 \cdot lbf & \text{if } \left(y2_s - ycg2\right) = 0 \cdot in \\ \dfrac{\left[Mz_boltcg2_q \cdot \left(y2_s - ycg2\right)\right] At2_s}{\sum_s \left[\left(y2_s - ycg2\right)^2 \cdot At2_s\right]} & \end{cases}$$

$$Fmy2_{s,q} := \begin{cases} 0 \cdot lbf & \text{if } \left(z2_s - zcg2\right) = 0 \cdot in \\ \dfrac{My_boltcg2_q \cdot \left(z2_s - zcg2\right) \cdot At2_s}{\sum_s \left[\left(\left|z2_s - zcg2\right|\right)^2 \cdot At2_s\right]} & \end{cases}$$

$Ft2_{s,q} := Ftdirect2_{s,q} + Fmz2_{s,q} + Fmy2_{s,q}$ Total Tensile load

Shear on bolts

Secondary shear on bolts $\quad Fs2_{s,q} := \dfrac{Mx_boltcg2_q \cdot r2_s \cdot As2_s}{\sum_s \left[\left(r2_s\right)^2 \cdot \left(As2_s\right)\right]}$ $\quad$ Total shear load $\quad Fstot2_{s,q} := Fs2_{s,q}$

(Note: The direct shear is taken by the shear pin.)

The stack commands below are used to stack applied axial load (P2), applied shear load (V2), and applied moment (M2) in ascending order per bolt. These loads are put into an array with the element/bolt number and load case number from above. See the "Output" file below. Notice how there is only 7 bolts, since bolt number 11 is not included.

$$P2 := \text{stack}\left[\left(Ft2^T\right)^{\langle 1\rangle}, \left(Ft2^T\right)^{\langle 2\rangle}, \left(Ft2^T\right)^{\langle 4\rangle}, \left(Ft2^T\right)^{\langle 5\rangle}, \left(Ft2^T\right)^{\langle 6\rangle}, \left(Ft2^T\right)^{\langle 9\rangle}, \left(Ft2^T\right)^{\langle 10\rangle}\right]$$

$$V2 := \text{stack}\left[\left(Fstot2^T\right)^{\langle 1\rangle}, \left(Fstot2^T\right)^{\langle 2\rangle}, \left(Fstot2^T\right)^{\langle 4\rangle}, \left(Fstot2^T\right)^{\langle 5\rangle}, \left(Fstot2^T\right)^{\langle 6\rangle}, \left(Fstot2^T\right)^{\langle 9\rangle}, \left(Fstot2^T\right)^{\langle 10\rangle}\right]$$

$$M2 := \text{stack}(M2, M2, M2, M2, M2, M2, M2)$$

The "Output2" file below outputs an array from left to right starting with the element identification (ID2), Load case number (LC2), applied load on the bolt (P2), applied shear on the bolt (V2), and applied moment on the bolt (M2). See the output array example above. The array is written to a text file.

$$Output2 := \text{augment}\left(ID2, LC2, \frac{P2}{lbf}, \frac{V2}{lbf}, \frac{M2}{in \cdot lbf}\right)$$

(Note: Since the ID2 and LC2 numbers are dimensionless, the P2, V2, and M2 values are divided by their units in order to make the array dimensionless.)

Size of the "Output2" Array: $\text{rows}(Output2) = 1792$

(7 (3/8" bolts) x 64 load cases) x 4 joints = 1792 load cases

WRITEPRN("output_forces_loweripvcf_r2_abortland_fs.txt") := Output2

Bolt Fail-safe Results

data_fs := READPRN("output_forces_loweripvcf_r2_abortland_fs.txt")

$s := 1 .. \text{rows}(data_fs)$

Prepared By	Name	Date	Engineering and Science Contract Group	File Name
	G. Reyes	03/02/06		LI_VC_375.mcd
Checked By	C. Bala		*Structural Analysis Section*	Drawing No. SEG39135776
Title	Bolts from Lower Interface Plate to Vacuum Case - 0.375" Bolts			

Fail-safe Loads, abort landing

Applied tensile load $P_FS3_s := data_fs_{s,3} \cdot lbf$ $ID_FS3_s := data_fs_{s,1}$

Applied shear load $V_FS3_s := data_fs_{s,4} \cdot lbf$ $LC_FS3_s := data_fs_{s,2}$

Applied bending moment $M_FS3_s := data_fs_{s,5} \cdot in \cdot lbf$

Fail-safe Factors of Safety

Ultimate $SFu_FS3 := 1.0$

Joint Separation $SFsep_FS3 := 1.0$

This file uses the calculations shown in \\escfil02\2i11_mathcad\8307_bolts\ multi_bolt_stiffness_insert_FS_RevC

Fail-Safe Stiffness File

Bolt Fail-safe Load data

Joint separation load $\max(Psep_FS) = 1448.553\,lbf$

Max. load on the bolt(ultimate) $\max(Pb_FS) = 9964.2\,lbf$

Summary of fail-safe Margins for bolt:

Joint separation	$MS_minFS3_{1,1} = 2.299$	Total Thread shear Ultimate	$MS_minFS3_{5,1} = 0.769$
Direct Tension Ultimate	$MS_minFS3_{2,1} = 8.006$	Shear Ultimate	$MS_minFS3_{6,1} = 5.3$
Total Tension Ultimate	$MS_minFS3_{3,1} = 0.506$	Bending Ultimate	$MS_minFS3_{7,1} = 10$
Direct Thread shear Ultimate	$MS_minFS3_{4,1} = 9.58$	Combined shear, tension and bending ultimate	$MS_minFS3_{8,1} = 0.5053$

Determination of the smallest fail-safe margin of safety for the bolt, and the failure mode:

$MSbolt_FS := \min(MS_FS3)$

$MSbolt_FS = 0.505$

Failure_Mode_FS = "Combined Shear Tension Bending Ultimate"

$MS_min_ID = 64012009$ Element Identification (64012) and Bolt Number (9) for Minimum Margin

$MS_min_LC = 2038$ Load Case Number for Minimum Margin

$MS_min_P = 1415.5$ Applied Tensile Load for Minimum Margin

$MS_min_V = -616.6$ Applied Shear Load for Minimum Margin

$MS_min_M = 0$ Applied Bending Moment for Minimum Margin

Prepared By	Name	Date		File Name
	G. Reyes	03/02/06		LI_VC_375.mcd
Checked By	C. Bala		**Engineering and Science Contract Group** *Structural Analysis Section*	Drawing No. SEG39135776
Title	Bolts from Lower Interface Plate to Vacuum Case - 0.375" Bolts			

Shear Pin Analysis for Lower Interface Plate to Vacuum Case

The Vacuum Case Assembly consists of four lower interface plates. Each lower interface plate has a shear pin (SDG39135755-001) installed with two bushings. The shear pin sits inside of a inner bushing SDG39135757-001 and the inner bushing sits inside of the outer bushing SDG39135757-003.

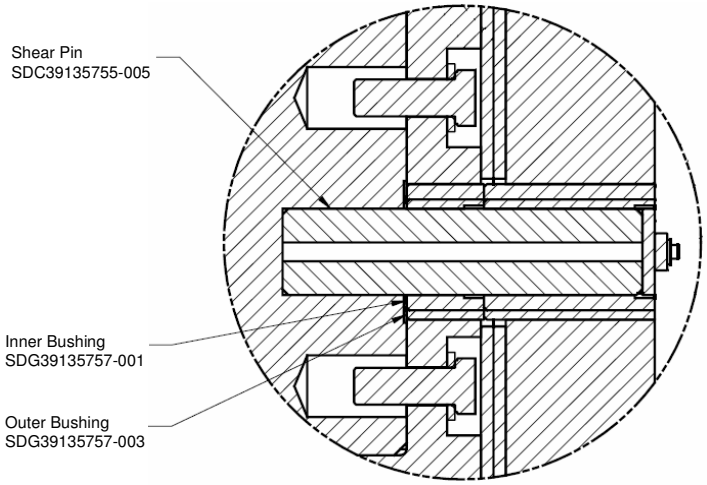

Cross Section of the Bolted Interface

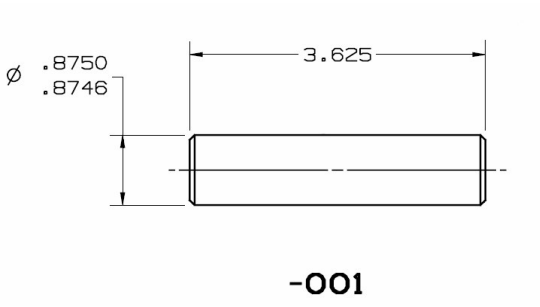

Shear Pin SDG39135755-001

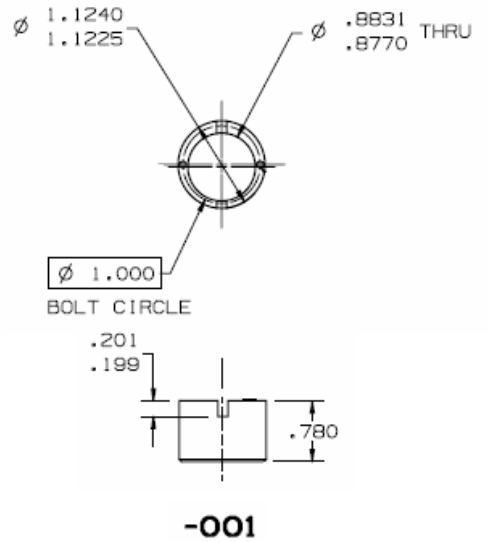

Inner Bushing SDG39135757-001

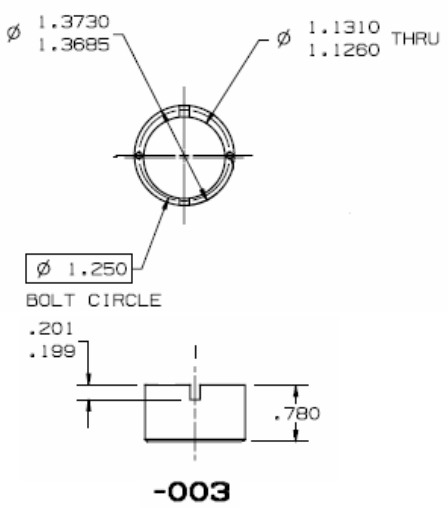

Outer Bushing SDG39135757-003

Geometry

Minimum Diameter of shear pin $dp := 0.8746 \cdot in$ (Ref. Dwg. SDG39135755-001)

Outer diameter of outer bushing $do := 1.3685 \cdot in$ (Ref. Dwg. SDG39135757-003)

Thickness of interface plate $tp := 0.75 \cdot in$ (Ref. Dwg. SDG39135789)

Length of inner bushing $tpin := 0.78 \cdot in$ (Ref. Dwg. SDG39135757-001)

Temperature Data

Shear Pin (Custom 455, H1000 bar, AMS5617):

Temperature correction factor for shear $csp := 0.96$ (Ref. MIL-HDBK-5J, table 2.6.4.1.2)

Interface Plate (Al 7050-T7451 Plate):

Temperature correction factor for ultimate $cpu := 0.91$ (Ref. MIL-HDBK-5J, fig. 3.7.4.2.1)

Temperature correction factor for yield $cpy := 0.97$

Bushings (Aluminum Bronze AMS4640, ASTM B150, alloy C63000):

Temperature correction factor for ultimate $cbu := 0.95$ (Ref. Appendix C8)

Temperature correction factor for yield $cby := 0.99$

Material Properties

Shear Pin (Custom 455, H1000 bar, AMS5617):

Allowable shear stress $Fsu := 124000 \cdot psi$ (Ref. MIL-HDBK-5J, table 2.6.4.0(b))

Interface Plate (Al 7050-T7451 Plate):

Allowable bearing stress $Fbru := 131000 \cdot psi$ (Ref. MIL-HDBK-5J, table 3.7.4.0 (d))

$Fbry := 101000 \cdot psi$

Bushings (Aluminum Bronze AMS4640, ASTM B150, alloy C63000):

Allowable bearing stress of bushing $Fbru := 125000 \cdot psi$ (Ref. Appendix C8, Rockwell Materials data sheet 09.12.01.01,1.0)

$Fbry := 72000 \cdot psi$

Shear Pin Analysis

Loads in shear pin from Bolt Analysis (Direct Shear)

$$Fsp_j := \sqrt{(Fy_j)^2 + (Fz_j)^2}$$

$rows(Fsp) = 256$

(4 joints x 64 load cases = 256 load cases)

Shear Area of pin

$$Ash := \frac{\beta \cdot dp^2}{4}$$

$Ash = 0.601\,in^2$

Allowable shear load

$Pall := Fsu \cdot Ash \cdot csp$

$Pall = 71515.8\,lbf$

Margin of safety

$$MSp_j := \left(\frac{Pall}{Fsp_j \cdot SFu} - 1\right)$$

$min(MSp) = 0.89$

Bearing of Outer Bushing on Interface Plate

Bearing area

$Ab := do \cdot tp$

$Ab = 1.026\,in^2$

Allowable bearing load

$Pbru := Fbru \cdot Ab \cdot cpu$

$Pbru = 116750.2\,lbf$

$Pbry := Fbry \cdot Ab \cdot cpy$

$Pbry = 71682\,lbf$

Margin of safety

$$MSu_j := \frac{Pbru}{Fsp_j \cdot SFu} - 1$$

$$MSy_j := \frac{Pbry}{Fsp_j \cdot SFy} - 1$$

$min(MSu) = 2.08$

$min(MSy) = 1.41$

Bearing of Shear Pin on Inner Bushing

Bearing area $Abp := dp \cdot tpin$ $Abp = 0.682\,in^2$

Allowable bearing load $Pbrui := Fbru \cdot Abp \cdot cbu$ $Pbrui = 81009.8\,lbf$

$Pbryi := Fbry \cdot Abp \cdot cby$ $Pbryi = 48626.4\,lbf$

Margin of safety $MSbru_j := \frac{Pbrui}{Fsp_j \cdot SFu} - 1$ $MSbry_j := \frac{Pbryi}{Fsp_j \cdot SFy} - 1$

$\min(MSbru) = 1.14$

$\min(MSbry) = 0.63$

3.10.7.2 Lower Interface Plate to Vacuum Case - .500"

Lower Interface Plate to Vacuum Case Bolt Analysis - 0.50" Bolts

The Vacuum Case Assembly consists of four lower interface plates. There are a total of 14 fasteners attaching the lower interface plate to the Vacuum Case. The following analysis will just include analysis of 6 of the 14 fasteners. The fasteners are NAS1958C9 (180 ksi), 0.50-20 UNJF. There is also one shear pin 0.875" in diameter. The drawing number for the Vacuum Case Assembly is SEG39135776.

Bolt Geometry

$$bolt := \begin{array}{c} \begin{array}{cc} \text{size} & \text{thread/in} \end{array} \\ \begin{pmatrix} 0.375 & 24 \\ 0.375 & 24 \\ 0.50 & 20 \\ 0.375 & 24 \\ 0.375 & 24 \\ 0.375 & 24 \\ 0.50 & 20 \\ 0.50 & 20 \\ 0.375 & 24 \\ 0.375 & 24 \\ 0.375 & 24 \\ 0.50 & 20 \\ 0.50 & 20 \\ 0.50 & 20 \end{pmatrix} \end{array}$$

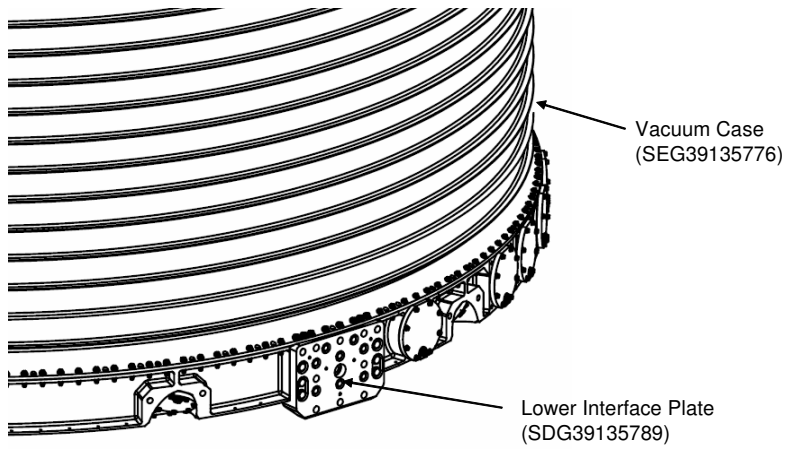

Side View of Vacuum Case (VC) Assembly

$i := 1 .. rows(bolt)$

$N_i := bolt_{i,2} \cdot \frac{1}{in}$ pitch of bolt

$D_i := bolt_{i,1} \cdot in$ bolt diameter

$At_i := \beta \cdot \left(\frac{D_i - 0.9743 \cdot \frac{1}{N_i}}{2} \right)^2$ Tensile Area of bolt

$As_i := \beta \cdot \left(\frac{D_i - 1.299038 \cdot \frac{1}{N_i}}{2} \right)^2$ Shear Area of bolt

Prepared By	Name	Date		File Name
	G. Reyes	03/06/06	**Engineering and Science Contract Group**	LI_VC_500.mcd
Checked By	C. Bala		*Structural Analysis Section*	Draw ing No. SEG39135776
Title	Bolts from Lower Interface Plate to Vacuum Case - 0.50" Bolts			

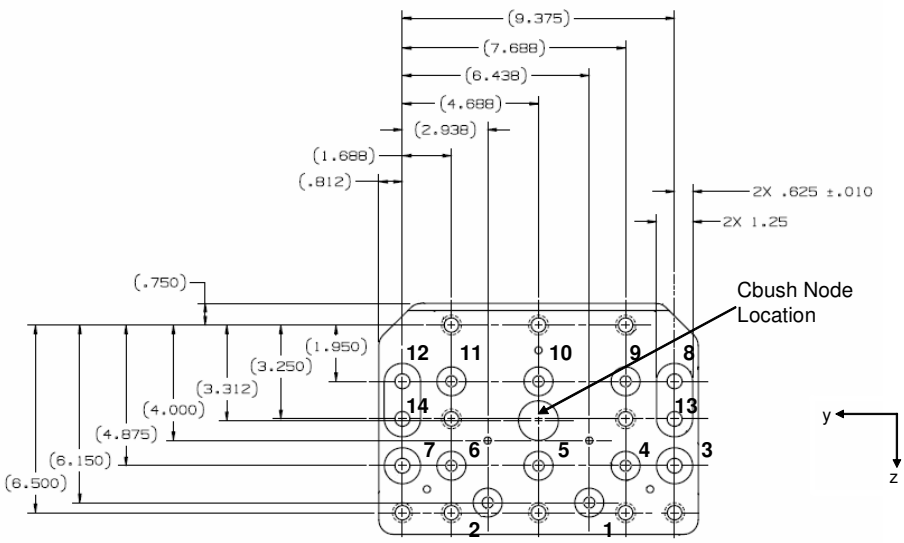

Lower Interface Plate to Vacuum Case Bolt Pattern

Bolt no.	x co-ord	y co-ord	z co-ord
1	0.0	−1.75	2.838
2	0.0	1.75	2.838
3	0.0	−4.688	1.563
4	0.0	−3.0	1.563
5	0.0	0.0	1.563
6	0.0	3.0	1.563
7	0.0	4.688	1.563
8	0.0	−4.688	−1.362
9	0.0	−3.0	−1.362
10	0.0	0.0	−1.362
11	0.0	3.0	−1.362
12	0.0	4.688	−1.362
13	0.0	−4.688	−0.062
14	0.0	4.688	−0.062

$$x := \begin{pmatrix} 0.0 \\ 0.0 \\ 0.0 \\ 0.0 \\ 0.0 \\ 0.0 \\ 0.0 \\ 0.0 \\ 0.0 \\ 0.0 \\ 0.0 \\ 0.0 \\ 0.0 \\ 0.0 \end{pmatrix} \cdot in \qquad y := \begin{pmatrix} -1.75 \\ 1.75 \\ -4.688 \\ -3.0 \\ 0.0 \\ 3.0 \\ 4.688 \\ -4.688 \\ -3.0 \\ 0.0 \\ 3.0 \\ 4.688 \\ -4.688 \\ 4.688 \end{pmatrix} \cdot in \qquad z := \begin{pmatrix} 2.838 \\ 2.838 \\ 1.563 \\ 1.563 \\ 1.563 \\ 1.563 \\ 1.563 \\ -1.362 \\ -1.362 \\ -1.362 \\ -1.362 \\ -1.362 \\ -0.062 \\ -0.062 \end{pmatrix} \cdot in$$

In this analysis, only the 0.50" bolts will be analyzed. These bolts correspond to bolt no. 3, 7, 8, 12, 13, and 14. Refer to bolt geometry in previous page.

Location of applied forces and moments

$xforce := 0.0in \qquad yforce := 0.0in \qquad zforce := 0.0in$

$$cgload := \begin{pmatrix} xforce \\ yforce \\ zforce \end{pmatrix} \qquad cgload = \begin{pmatrix} 0 \\ 0 \\ 0 \end{pmatrix} \cdot in$$

Center of gravity of bolt group

$$xcg := \frac{\sum_i x_i}{rows(x)} \qquad xcg = 0\cdot in \qquad ycg := \frac{\sum_i y_i}{rows(y)} \qquad ycg = 0\cdot in \qquad zcg := \frac{\sum_i z_i}{rows(z)} \qquad zcg = 0.468\cdot in$$

$$cg_{bolt} := \begin{pmatrix} xcg \\ ycg \\ zcg \end{pmatrix} \qquad cg_{bolt} = \begin{pmatrix} 0 \\ 0 \\ 0.468 \end{pmatrix}\cdot in$$

Note: Since the x direction is into the plate the loads are shared equally between the bolts. In the z direction the bolt pattern is unsymmetric and has a 0.468" offset from the center of gravity.

Load Vector

$$r_{load} := cgload - cg_{bolt} \qquad r_{load} = \begin{pmatrix} 0 \\ 0 \\ -0.468 \end{pmatrix}\cdot in$$

Distance from CG of Bolts to Individual Bolts for shear calculations

$$r_i := \sqrt{(z_i - zcg)^2 + (y_i - ycg)^2}$$

$$r = \begin{pmatrix} 2.946 \\ 2.946 \\ 4.814 \\ 3.193 \\ 1.095 \\ 3.193 \\ 4.814 \\ 5.033 \\ 3.514 \\ 1.830 \\ 3.514 \\ 5.033 \\ 4.718 \\ 4.718 \end{pmatrix}\cdot in$$

Loads model 2-04 was used to retrieve loads at the four bolted interfaces. A Cbush element located at the center of each interface plate was post processed in NASPOST for forces and moments in the x, y, and z directions. The Cbush element identifications for the four bolted interfaces are 64011, 64012, 64013, and 64014. These loads are read into an array and distributed out to the 14 bolts for each interface plate.

(Note: This joint was checked for minimum margins of safety for launch, nominal landing, and abort landing load cases. The abort landing cases combined with abort landing temperature data resulted in the lowest minimum margins of safety. Therefore, the abort landing cases are used in this analysis.)

Reading database file for bolted joint, abort landing case

$data := READPRN("lower_ipvcf_r2_abortland.txt")$

$num_bolts := rows(bolt)$

$j := 1..rows(data)$

Loads from 2-04 loads model, abort landing case

Axial Load $Fx_j := data_{j,3} \cdot lbf$

Shear in Y axis $Fy_j := data_{j,4} \cdot lbf$

Shear in Z axis $Fz_j := data_{j,5} \cdot lbf$

Torsion $Mx_j := data_{j,6} \cdot in \cdot lbf$

Moment about Y axis $My_j := data_{j,7} \cdot in \cdot lbf$

Moment about Z axis $Mz_j := data_{j,8} \cdot in \cdot lbf$

Element Identification $ID_j := data_{j,1}$

$ID_j := ID_j \cdot 1000 + 1$ Counter for number of bolts in pattern

Load Case Number $LC_j := data_{j,2}$

Applied Bending Moment at Bolts $M_j := 0 \cdot in \cdot lbf$

Format of Output File

The stack commands below are used to stack the element identifications (ID) and load cases (LC) in ascending order per bolt. The element ID number is located in the first column and the LC numbers in the second column. For each element identification, 64011, 64012, 64013, and 64014, the bolt number within the bolt pattern is added to the end of each element identification. For example, the element identification number 64001 will have bolt numbers 003, 007 thru 008, and 012 thru 014 attached to the end for all 64 load cases. This brings the total number of load cases to 1536 (4 joints x 6 (1/2" bolts) x 64 load cases = 1536) since only 6 of the bolts will be analyzed. See the array example to the right.

$ID := stack(ID + 2, ID + 6, ID + 7, ID + 11, ID + 12, ID + 13)$

$LC := stack(LC, LC, LC, LC, LC, LC)$

$$\begin{array}{cc} ID & LC \\ \end{array}$$
$$\begin{bmatrix} 64011003 & 2001 \\ 64011003 & 2002 \\ \ldots & \ldots \\ 64011003 & 2064 \\ 64011007 & 2001 \\ 64011007 & 2002 \\ \ldots & \ldots \\ 64011007 & 2064 \\ \ldots & \ldots \\ \ldots & \ldots \\ 64011014 & 2001 \\ 64011014 & 2002 \\ \ldots & \ldots \\ 64011014 & 2064 \end{bmatrix}$$

Array Example

Moment Distribution

$$M_{tot}^{\langle j \rangle} := \begin{pmatrix} Mx_j \\ My_j \\ Mz_j \end{pmatrix} + r_{load} \times \begin{pmatrix} Fx_j \\ Fy_j \\ Fz_j \end{pmatrix}$$

Use the cross-product to determine the additional moments acting on the fasteners.

$Mx_boltcg_j := M_{tot_{1,j}}$ $\quad$ $My_boltcg_j := M_{tot_{2,j}}$ $\quad$ $Mz_boltcg_j := M_{tot_{3,j}}$

Tension on bolts

$$Ftdirect_{i,j} := \begin{cases} 0 \cdot lbf & \text{if } Fx_j \le 0lbf \\ \dfrac{Fx_j}{num_bolts} & \text{otherwise} \end{cases}$$

Direct tensile load calculation - (The if statement checks for compression)

$$Fmz_{i,j} := \begin{cases} 0 \cdot lbf & \text{if } (y_i - ycg) = 0 \cdot in \\ \dfrac{\left[Mz_boltcg_j \cdot (y_i - ycg)\right] At_i}{\sum_i \left[(y_i - ycg)^2 \cdot At_i\right]} & \end{cases}$$

$$Fmy_{i,j} := \begin{cases} 0 \cdot lbf & \text{if } (z_i - zcg) = 0 \cdot in \\ \dfrac{My_boltcg_j \cdot (z_i - zcg) \cdot At_i}{\sum_i \left[\left(\left|z_i - zcg\right|\right)^2 \cdot At_i\right]} & \end{cases}$$

$$Ft_{i,j} := Ftdirect_{i,j} + Fmz_{i,j} + Fmy_{i,j}$$

Total tensile load

Shear on bolts

Secondary shear on bolts $\quad Fs_{i,j} := \dfrac{Mx_boltcg_j \cdot r_i \cdot As_i}{\sum_i \left[(r_i)^2 \cdot (As_i)\right]}$ $\quad$ Total shear load $\quad Fstot_{i,j} := Fs_{i,j}$

(Note : The direct shear is taken by the shear pin.)

The stack commands below are used to stack applied axial load (P), applied shear load (V), and applied moment (M) in ascending order per bolt. These loads are put into an array with the element/bolt number and load case number from above. See the "Output" file below.

$$P := \text{stack}\left[\left(Ft^T\right)^{\langle 3\rangle}, \left(Ft^T\right)^{\langle 7\rangle}, \left(Ft^T\right)^{\langle 8\rangle}, \left(Ft^T\right)^{\langle 12\rangle}, \left(Ft^T\right)^{\langle 13\rangle}, \left(Ft^T\right)^{\langle 14\rangle}\right]$$

$$V := \text{stack}\left[\left(Fstot^T\right)^{\langle 3\rangle}, \left(Fstot^T\right)^{\langle 7\rangle}, \left(Fstot^T\right)^{\langle 8\rangle}, \left(Fstot^T\right)^{\langle 12\rangle}, \left(Fstot^T\right)^{\langle 13\rangle}, \left(Fstot^T\right)^{\langle 14\rangle}\right]$$

$$M := \text{stack}(M, M, M, M, M, M)$$

The "Output" file below outputs an array from left to right starting with the element identification (ID), load case number (LC), applied load on the bolt (P), applied shear on the bolt (V), and applied moment on the bolt (M). See the output array example below. The array is then written to a text file.

$$\text{Output} := \text{augment}\left(ID, LC, \frac{P}{lbf}, \frac{V}{lbf}, \frac{M}{in \cdot lbf}\right)$$

(Note: Since the ID and LC numbers are dimensionless, the P, V, and M values are divided by their units in order to make the array dimensionless.)

$$\begin{array}{c} \begin{array}{ccccc} ID & LC & P & V & M \end{array} \\ \begin{bmatrix} 64011003 & 2001 & -1014.508 & -228.5 & 0 \\ 64011003 & 2002 & -925.211 & -220.84 & 0 \\ \ldots & \ldots & \ldots & \ldots & \ldots \\ 64011003 & 2064 & 536.272 & -1600.0 & 0 \\ 64011007 & 2001 & -673.451 & -228.50 & 0 \\ 64011007 & 2002 & -743.854 & -220.84 & 0 \\ \ldots & \ldots & \ldots & \ldots & \ldots \\ 64011007 & 2064 & 761.485 & -1600.37 & 0 \\ \ldots & \ldots & \ldots & \ldots & \ldots \\ \ldots & \ldots & \ldots & \ldots & \ldots \\ 64011014 & 2001 & 579.439 & -223.934 & 0 \\ 64011014 & 2002 & 495.011 & -216.427 & 0 \\ \ldots & \ldots & \ldots & \ldots & \ldots \\ 64011014 & 2064 & 783.615 & -1568.39 & 0 \end{bmatrix} \end{array}$$

Size of the "Output" Array: $\text{rows}(\text{Output}) = 1536$

(6 (1/2"bolts) x 64 load cases) x 4 joints = 1536 load cases

(Note: The output array to the left is an example of the array format. The loads in this example are for format purposes only and should NOT be used in this analysis.)

Example of Output Array

$$\text{WRITEPRN}(\text{"output_forces_loweripvcf_r2_abortland.txt"}) := \text{Output}$$

Prepared By	Name	Date	Engineering and Science Contract Group	File Name
	G. Reyes	03/06/06		LI_VC_500.mcd
Checked By	C. Bala		*Structural Analysis Section*	Draw ing No. SEG39135776
Title	Bolts from Lower Interface Plate to Vacuum Case - 0.50" Bolts			

CHECK BOLTS (NAS1958C9 0.50-20UNJF-3A, Material-A-286), Insert MS51831CA-206L , Washer NAS1587-8C

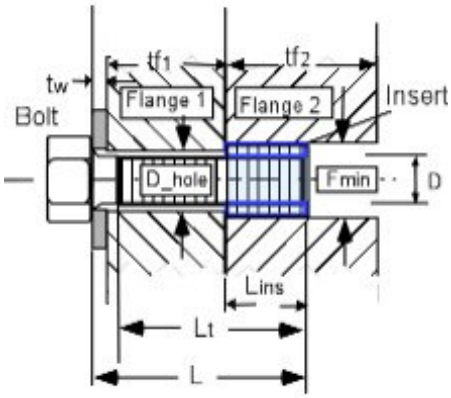

The array from the text file above is read:

$data := READPRN("output_forces_loweripvcf_r2_abortland.txt")$

$s := 1..rows(data)$

Flange 1: Lower Interface Plate
Part number: SEG39135789
Material: 7050-T7451

Flange 2: Lower Support Ring Assy
Part number: SEG39135787
Material: 7050-T7451

Loads from Abort Landing Load Cases

Applied tensile load $P_s := data_{s,3} \cdot lbf$

Applied shear load $V_s := data_{s,4} \cdot lbf$

Applied bending moment $M_s := data_{s,5} \cdot in \cdot lbf$

Element Identification $ID_s := data_{s,1}$

Load case number $LC_s := data_{s,2}$

Factors of Safety

Ultimate $SFu := 1.4$

Yield $SFy := 1.1$

Joint Separation $SFsep := 1.2$

Fitting factor $FF := 1.15$

Temperature Data (Ref Appendix C2), Abort Landing Case

Assembly $Temp_initial := 70 \cdot deg$

Maximum $Temp_max := 150 \cdot deg$

Minimum $Temp_min := 40 \cdot deg$

Bolt and Insert Data

Nominal diameter of bolt $D := 0.50 \cdot in$

Total length of bolt $L := 1.297 \cdot in$

Threaded length $Lt := 0.735 \cdot in$

(If bolt is fully threaded, input Lt = L)

Number of threads/inch $Nt := 20 \cdot \frac{1}{in}$

Length of insert $Lins := 0.688 \cdot in$

Min. external diameter of insert $Fmin := 0.615 \cdot in$

Depth of recess for insert $lr := 0.02 \cdot in$

This file uses the calculations shown in \\escfil02\2i11_mathcad\8307_bolts\thread_data.mcd

Prepared By	Name	Date	Engineering and Science Contract Group	File Name
	G. Reyes	03/06/06		LI_VC_500.mcd
Checked By	C. Bala		*Structural Analysis Section*	Drawing No. SEG39135776
Title	Bolts from Lower Interface Plate to Vacuum Case - 0.50" Bolts			

Washer Data

Thickness of washer $tw := 0.078 \cdot in$

Outer Diameter of washer $Dw := .875in$

Inner Diameter of washer $Dwi := 0.504 \cdot in$

Bolt head dia. across flats $dw := 0.710 \cdot in$ (used only if there is no washer)

Flange data

Thickness of flange 1 (Ref. SDG39135789) $tf1 := .345 \cdot in$

Thickness of flange 2 $tf2 := .688in$ (Length of insert)

Diameter of hole (Ref. SDG39135789) $D_hole := 0.516 \cdot in$

Note: If there is no washer, tw, Dw, and Dwi should be zero.

Material Property Data

Bolt

Temperature correction factor for bolt strength ultimate (Ref. MIL-HDBK-5J, fig. 6.2.1.1.1) $TSu_bolt := .97$ yield $TSy_bolt := .97$

Bolt ultimate tensile allowable stress $Ftu_bolt := 180000 \cdot psi$ (Ref. NAS1958)

Bolt ultimate shear allowable stress $Fsu_bolt := 0.6 \cdot Ftu_bolt$

Bolt yield tensile allowable $Fty_bolt := 132353 \cdot psi$ (Ref. Appendix C10)

Temperature correction factor for bolt modulus $TE_bolt := .98$ (Ref. MIL-HDBK-5J, fig. 6.2.1.1.4(a))

Modulus of elasticity of bolt $E_bolt := \left(29.1 \cdot 10^{6} \cdot psi\right)$ (Ref. MIL-HDBK-5J, table 6.2.1.0(b))

Thermal coefficient for bolt: $u_bolt_hot := 9.1 \cdot 10^{-6} \cdot \frac{\frac{in}{in}}{deg}$ $u_bolt_cold := 8.9 \cdot 10^{-6} \cdot \frac{\frac{in}{in}}{deg}$

(Ref. MIL-HDBK-5J, fig. 6.2.1.0)

Insert

Temperature correction factor for insert strength $TS_ins := .97$ (Ref. MIL-HDBK-5J, fig. 6.2.1.1.1)

Ultimate tensile allowable stress $Ftu_ins := 140000 \cdot psi$ (Ref. MS51831)

Ultimate shear allowable stress $Fsu_ins := 0.6 \cdot Ftu_ins$

Washer

Temperature correction factor for washer modulus $TE_washer := .97$ (Ref. MIL-HDBK-5J, fig. 6.2.1.1.1)

Modulus of elasticity of washer $E_washer := \left(29.1 \cdot 10^{6} \cdot psi\right)$ (Ref. MIL-HDBK-5J, table 6.2.1.0(b))

Prepared By	Name	Date		File Name
	G. Reyes	03/06/06		LI_VC_500.mcd
Checked By	C. Bala		**Engineering and Science Contract Group** *Structural Analysis Section*	Draw ing No. SEG39135776
Title	Bolts from Lower Interface Plate to Vacuum Case - 0.50" Bolts			

Flanges (Mechanical Properties shall meet the requirements of AMS 4108)

Stiffness of the joint depends upon number of members in the grip of the fasteners,
Modulus of elasticity of these members, and diameters of the bolt and the washer.

Temperature correction factor for flange 1 $Tf1E := .98$ (modulus) (Ref. MIL-HDBK-5J, fig. 3.7.6.1.4 and Appendix C9)

Temperature correction factor for flange 2 $Tf2E := .98$ (modulus)

$Tf2s := .97$ (strength) (Ref. MIL-HDBK-5J, fig. 3.7.4.2.1)

Shear strength allowable for flanges $Fsu_f2 := 42000 \cdot psi$ (Ref. MIL-HDBK-5J, table 3.7.4.0(d))

Modulus of elasticity for the parts in the joint (Ref. MIL-HDBK-5J, table 3.7.4.0(d))

$E_flange1 := \left(10.2 \cdot 10^{6} \cdot psi\right)$ $E_flange2 := \left(10.2 \cdot 10^{6} \cdot psi\right)$

Coefficient of thermal expansion for flanges (Ref. MIL-HDBK-5J, table 3.7.4.0(b1) and Appendix C9)

$u_flange1_hot := 12.8 \cdot 10^{-6} \cdot \frac{\frac{in}{in}}{deg}$ $u_flange2_hot := 12.8 \cdot 10^{-6} \cdot \frac{\frac{in}{in}}{deg}$

$u_flange1_cold := 12.1 \cdot 10^{-6} \cdot \frac{\frac{in}{in}}{deg}$ $u_flange2_cold := 12.1 \cdot 10^{-6} \cdot \frac{\frac{in}{in}}{deg}$

Torque/Preload data

Maximum torque (62% of yield) $Tmax := 984 \cdot in \cdot lbf$

Minimum torque (95% of max. torque) $Tmin := 934 \cdot in \cdot lbf$

Torque coefficient: $k := 0.15$

Loading plane factor: $n := .5$

Preload Uncertainty: $:= 0.25$

This file uses the calculations shown in \\escfil02\2i11_mathcad\8307_bolts\multi_bolt_stiffness_insert_RevC

Insert Stiffness File

Prepared By	Name	Date		File Name
	G. Reyes	03/06/06	Engineering and Science Contract Group	LI_VC_500.mcd
Checked By	C. Bala		*Structural Analysis Section*	Draw ing No. SEG39135776
Title	Bolts from Lower Interface Plate to Vacuum Case - 0.50" Bolts			

Bolt Load data

Bolt/joint stiffness factor	$= = 0.432$	Preload due to temperature	$Pthr_pos = 1176.2 \cdot lbf$
Max. preload	$PLDmax = 17576.2 \cdot lbf$		$Pthr_neg = -381.5 \cdot lbf$
Min. preload	$PLDmin = 8138.5 \cdot lbf$	Uncertainty factor	$= 0.25$
Joint separation load	$max(Psep) = 3133.493 \cdot lbf$	Torque coefficient	$k = 0.15$
Max. load on the bolt(ultimate)	$max(Pb) = 18483.7 \cdot lbf$	Loading plane factor	$n = 0.5$
Max. load on the bolt(yield)	$max(Pby) = 18289.2 \cdot lbf$	Thread shear pullout load of bolt or insert	$Pths = 51098.8 \cdot lbf$
Bolt ultimate tensile strength	$PAt = 27425.9 \cdot lbf$	Thread shear pullout load in parent metal	$Ppths = 27077.2 \cdot lbf$

Length_check = "Bolt length is sufficient"

Summary of Margins for bolt:

Joint separation	$MS_min_{1,1} = 1.880$	Direct Thread shear Ultimate	$MS_min_{6,1} = 5.441$
Direct Tension Ultimate	$MS_min_{2,1} = 5.524$	Total Thread shear Ultimate	$MS_min_{7,1} = 0.465$
Direct Tension Yield	$MS_min_{3,1} = 5.105$	Shear Ultimate	$MS_min_{8,1} = 2.16$
Total Tension Ultimate	$MS_min_{4,1} = 0.484$	Bending Ultimate	$MS_min_{9,1} = 10$
Total Tension Yield	$MS_min_{5,1} = 0.103$	Combined shear, tension and bending ultimate	$MS_min_{10,1} = 0.451$

Determination of the smallest margin of safety for the bolt, and the failure mode:

$MSbolt := min(MS)$

$MSbolt = 0.103$ Failure_Mode = "Total Tension Yield"

$MS_min_ID = 64011012$	Element Identification (64011) and Bolt Number (12) for Minimum Margin
$MS_min_LC = 2049$	Load Case Number for Minimum Margin
$MS_min_P = 2611.2$	Applied Tensile Load for Minimum Margin
$MS_min_V = 358.4$	Applied Shear Load for Minimum Margin
$MS_min_M = 0$	Applied Bending Moment for Minimum Margin

Fail-Safe Analysis for Lower Interface Plate to Vacuum Case (Shear Pin Failure)

This portion of the analysis assumes a failure in the shear pin. The shear pin part number is SDG39135755-001. All 6 NAS1958 1/2" fasteners will take the direct shear load.

Direct shear Loads $Fsd_{i,j} := \frac{\sqrt{(Fy_j)^2 + (Fz_j)^2}}{num_bolts}$

Total shear load $Fstot_{i,j} := Fs_{i,j} + Fsd_{i,j}$

(Note: The Fs variable is the secondary shear and has been calculated previously in the analysis.)

The stack command below is used to stack the applied shear load (V) in ascending order per bolt. The applied axial load (P) and applied moment (M) are stacked above and reused in the output file below. These loads are put into an array with the element/bolt number and load case number from above.

$$V := stack\left[(Fstot^T)^{\langle 3\rangle}, (Fstot^T)^{\langle 7\rangle}, (Fstot^T)^{\langle 8\rangle}, (Fstot^T)^{\langle 12\rangle}, (Fstot^T)^{\langle 13\rangle}, (Fstot^T)^{\langle 14\rangle}\right]$$

The "Output" file below outputs an array from left to right starting with the element identification (ID), Load case number (LC), applied load on the bolt (P), applied shear on the bolt (V), and applied moment on the bolt (M). The array is written to a text file. For the format of the array see the output example array above.

$$Output := augment\left(ID, LC, \frac{P}{lbf}, \frac{V}{lbf}, \frac{M}{in \cdot lbf}\right)$$

(Note: Since the ID and LC numbers are dimensionless, the P, V, and M values are divided by their units in order to make the array dimensionless.)

Size of the "Output" Array: $rows(Output) = 1536$

(6 (1/2"bolts) x 64 load cases) x 4 joints = 1536 load cases

WRITEPRN("output_forces_loweripvcf_r2_abortland_pinfs.txt") := Output

Fail-safe Analysis (Shear Pin Failure)

data_fsp := READPRN("output_forces_loweripvcf_r2_abortland_pinfs.txt")

$s := 1 .. rows(data_fsp)$

Prepared By	Name G. Reyes	Date 03/06/06	Engineering and Science Contract Group *Structural Analysis Section*	File Name LI_VC_500.mcd
Checked By	C. Bala			Draw ing No. SEG39135776
Title	Bolts from Lower Interface Plate to Vacuum Case - 0.50" Bolts			

Fail-safe Loads, abort landing

Applied tensile load $P_FS_s := data_fsp_{s,3} \cdot lbf$ $ID_FS_s := data_fsp_{s,1}$

Applied shear load $V_FS_s := data_fsp_{s,4} \cdot lbf$ $LC_FS_s := data_fsp_{s,2}$

Applied bending moment $M_FS_s := data_fsp_{s,5} \cdot in \cdot lbf$

Fail-safe Factors of Safety

Ultimate $SFu_FS := 1.0$

Joint Separation $SFsep_FS := 1.0$

This file uses the calculations shown in \\escfil02\2i11_mathcad\8307_bolts\ multi_bolt_stiffness_insert_FS_RevC

Bolt Fail-safe Load data

Joint separation load $\max(Psep_FS) = 2611.244 \cdot lbf$

Max. load on the bolt(ultimate) $\max(Pb_FS) = 18224.4 \cdot lbf$

Summary of fail-safe Margins for bolt:

Joint separation	$MS_minFS_{1,1} = 2.456$	Total Thread shear Ultimate	$MS_minFS_{5,1} = 0.486$
Direct Tension Ultimate	$MS_minFS_{2,1} = 8.133$	Shear Ultimate	$MS_minFS_{6,1} = 3.49$
Total Tension Ultimate	$MS_minFS_{3,1} = 0.505$	Bending Ultimate	$MS_minFS_{7,1} = 10$
Direct Thread shear Ultimate	$MS_minFS_{4,1} = 8.02$	Combined shear, tension and bending ultimate	$MS_minFS_{8,1} = 0.5044$

Determination of the smallest fail-safe margin of safety for the bolt, and the failure mode:

$MSbolt_FS := \min(MS_FS)$

$MSbolt_FS = 0.486$ Failure_Mode_FS = "Total Thread Shear Ultimate"

$MS_min_ID = 64011012$	Element Identification (64011) and Bolt Number (12) for Minimum Margin
$MS_min_LC = 2049$	Load Case Number for Minimum Margin
$MS_min_P = 2611.2$	Applied Tensile Load for Minimum Margin
$MS_min_V = 786.5$	Applied Shear Load for Minimum Margin
$MS_min_M = 0$	Applied Bending Moment for Minimum Margin

Prepared By	Name	Date		File Name
	G. Reyes	03/06/06		LI_VC_500.mcd
Checked By	C. Bala		**Engineering and Science Contract Group** *Structural Analysis Section*	Draw ing No. SEG39135776
Title	Bolts from Lower Interface Plate to Vacuum Case - 0.50" Bolts			

Bolt Fail-Safe Analysis for Lower Interface Plate to Vacuum Case - 0.50" Bolts

Since bolt number 12 has the lowest margin of safety it is assumed that this bolt will be the first bolt to fail. There are now 5, NAS1958C9 0.50-20 UNJF fasteners, holding the lower interface plate to the Vacuum Case. The drawing number for the Vacuum Case Assembly is SEG39135776.

size thread/in

$$bolt2 := \begin{pmatrix} 0.375 & 24 \\ 0.375 & 24 \\ 0.50 & 20 \\ 0.375 & 24 \\ 0.375 & 24 \\ 0.375 & 24 \\ 0.50 & 20 \\ 0.50 & 20 \\ 0.375 & 24 \\ 0.375 & 24 \\ 0.375 & 24 \\ 0.50 & 20 \\ 0.50 & 20 \end{pmatrix}$$

$s := 1 .. rows(bolt2)$

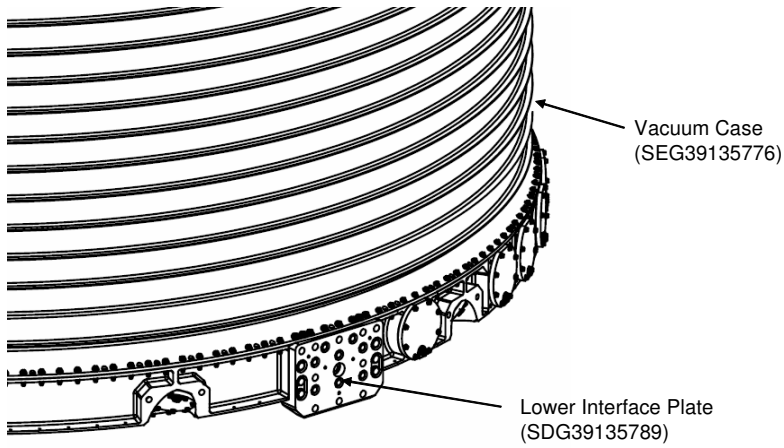

Side View of Vacuum Case (VC)

$N2_s := bolt2_{s,2} \cdot \frac{1}{in}$ pitch of bolt $D2_s := bolt2_{s,1} \cdot in$ bolt diameter

$At2_s := \beta \cdot \left(\frac{D2_s - 0.9743 \cdot \frac{1}{N2_s}}{2} \right)^2$ Tensile Area of bolt $As2_s := \beta \cdot \left(\frac{D2_s - 1.299038 \cdot \frac{1}{N2_s}}{2} \right)^2$ Shear Area of bolt

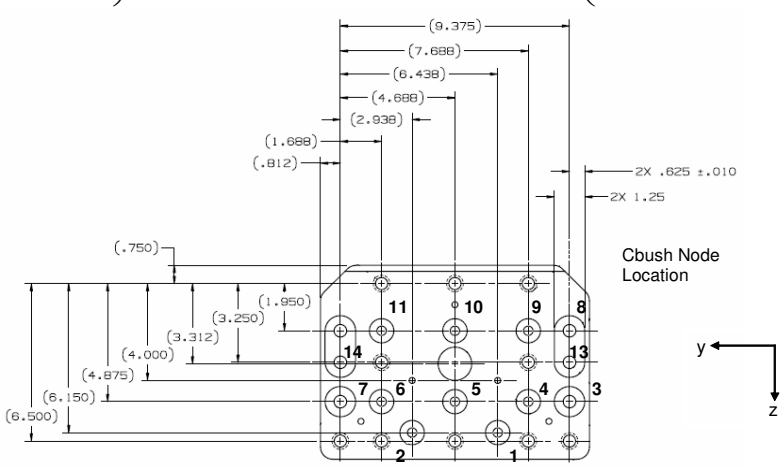

Lower Interface Plate to Vacuum Case Bolt Pattern for Fail-Safe Analysis

Bolt no.	x co-ord	y co-ord	z co-ord
1	0.0	−1.75	2.838
2	0.0	1.75	2.838
3	0.0	−4.688	1.563
4	0.0	−3.0	1.563
5	0.0	0.0	1.563
6	0.0	3.0	1.563
7	0.0	4.688	1.563
8	0.0	−4.688	−1.362
9	0.0	−3.0	−1.362
10	0.0	0.0	−1.362
11	0.0	3.0	−1.362
13	0.0	−4.688	−0.062
14	0.0	4.688	−0.062

$$x2 := \begin{pmatrix} 0.0 \\ 0.0 \\ 0.0 \\ 0.0 \\ 0.0 \\ 0.0 \\ 0.0 \\ 0.0 \\ 0.0 \\ 0.0 \\ 0.0 \\ 0.0 \\ 0.0 \end{pmatrix} \cdot in \qquad y2 := \begin{pmatrix} -1.75 \\ 1.75 \\ -4.688 \\ -3.0 \\ 0.0 \\ 3.0 \\ 4.688 \\ -4.688 \\ -3.0 \\ 0.0 \\ 3.0 \\ -4.688 \\ 4.688 \end{pmatrix} \cdot in \qquad z2 := \begin{pmatrix} 2.838 \\ 2.838 \\ 1.563 \\ 1.563 \\ 1.563 \\ 1.563 \\ 1.563 \\ -1.362 \\ -1.362 \\ -1.362 \\ -1.362 \\ -0.062 \\ -0.062 \end{pmatrix} \cdot in$$

Location of applied forces and moments

$xforce2 := 0.0in \qquad yforce2 := 0.0in \qquad zforce2 := 0.0in$

$$cgload2 := \begin{pmatrix} xforce2 \\ yforce2 \\ zforce2 \end{pmatrix} \qquad cgload2 = \begin{pmatrix} 0 \\ 0 \\ 0 \end{pmatrix} \cdot in$$

Center of gravity of bolt group

$$xcg2 := \frac{\sum_s x2_s}{rows(x2)} \qquad xcg = 0 \cdot in \qquad ycg2 := \frac{\sum_s y2_s}{rows(y2)} \qquad ycg2 = -0.361 \cdot in \qquad zcg2 := \frac{\sum_s z2_s}{rows(z2)} \qquad zcg2 = 0.609 \cdot in$$

$$cg_{bolt2} := \begin{pmatrix} xcg2 \\ ycg2 \\ zcg2 \end{pmatrix} \qquad cg_{bolt2} = \begin{pmatrix} 0 \\ -0.361 \\ 0.609 \end{pmatrix} \cdot in$$

Note: Since the x direction is into the plate the loads are shared equally between the bolts. However, due to a failure in bolt 12, the y and z directions in the bolt pattern are unsymmetric and have offsets from the center of gravity.

Load Vector

$$r_{load2} := cgload2 - cg_{bolt2} \qquad r_{load2} = \begin{pmatrix} 0 \\ 0.361 \\ -0.609 \end{pmatrix} \cdot in$$

Distance from CG of Bolts to Individual Bolts for shear calculations

$$r2_s := \sqrt{\left(z2_s - zcg2\right)^2 + \left(y2_s - ycg2\right)^2}$$

$$r2 = \begin{pmatrix} 2.626 \\ 3.070 \\ 4.431 \\ 2.806 \\ 1.020 \\ 3.493 \\ 5.138 \\ 4.755 \\ 3.294 \\ 2.004 \\ 3.896 \\ 4.379 \\ 5.093 \end{pmatrix} \cdot in$$

Reading database file for bolted joint, abort landing case

$data := READPRN("lower_ipvcf_r2_abortland.txt")$

$q := 1 .. rows(data)$

$num_bolts2 := rows(bolt2)$

Loads from 2-04 loads model, abort landing case

Axial Load $Fx2_q := data_{q,3} \cdot lbf$

Shear in Y axis $Fy2_q := data_{q,4} \cdot lbf$

Shear in Z axis $Fz2_q := data_{q,5} \cdot lbf$

Torsion $Mx2_q := data_{q,6} \cdot in \cdot lbf$

Moment about Y axis $My2_q := data_{q,7} \cdot in \cdot lbf$

Moment about Z axis $Mz2_q := data_{q,8} \cdot in \cdot lbf$

Element Identification $ID2_q := data_{q,1}$

$ID2_q := ID2_q \cdot 1000 + 1$ Counter for number of bolts in pattern

Load Case Number $LC2_q := data_{q,2}$

Applied Bending Moment at Bolts $M2_q := 0 \cdot in \cdot lbf$

Format of Output File

The stack command below is used to stack the element identifications (ID2) and load cases (LC2) in ascending order per bolt.See the array example above for explanation. Note: bolt number 12 is not included.

$ID2 := stack(ID2 + 2, ID2 + 6, ID2 + 7, ID2 + 12, ID2 + 13)$

$LC2 := stack(LC2, LC2, LC2, LC2, LC2)$

Moment Distribution

$$M_{tot2}^{\langle q \rangle} := \begin{pmatrix} Mx2_q \\ My2_q \\ Mz2_q \end{pmatrix} + r_{load} \times \begin{pmatrix} Fx2_q \\ Fy2_q \\ Fz2_q \end{pmatrix}$$

Use the cross-product to determine the additional moments acting on the fasteners.

$Mx_boltcg2_q := M_{tot2_{1,q}}$ $\quad My_boltcg2_q := M_{tot2_{2,q}}$ $\quad Mz_boltcg2_q := M_{tot2_{3,q}}$

Tension on bolts

$$Ftdirect2_{s,q} := \begin{cases} 0 \cdot lbf & \text{if } Fx2_q \le 0lbf \\ \dfrac{Fx2_q}{num_bolts2} & \text{otherwise} \end{cases}$$

Direct tensile load calculation

$$Fmz2_{s,q} := \begin{cases} 0 \cdot lbf & \text{if } \left(y2_s - ycg2\right) = 0 \cdot in \\ \dfrac{\left[Mz_boltcg2_q \cdot \left(y2_s - ycg2\right)\right] At2_s}{\sum_s \left[\left(y2_s - ycg2\right)^2 \cdot At2_s\right]} & \end{cases}$$

$$Fmy2_{s,q} := \begin{cases} 0 \cdot lbf & \text{if } \left(z2_s - zcg2\right) = 0 \cdot in \\ \dfrac{My_boltcg2_q \cdot \left(z2_s - zcg2\right) \cdot At2_s}{\sum_s \left[\left(\left|z2_s - zcg2\right|\right)^2 \cdot At2_s\right]} & \end{cases}$$

$Ft2_{s,q} := Ftdirect2_{s,q} + Fmz2_{s,q} + Fmy2_{s,q}$ Total Tensile load

Shear on bolts

Secondary shear on bolts $\quad Fs2_{s,q} := \dfrac{Mx_boltcg2_q \cdot r2_s \cdot As2_s}{\sum_s \left[\left(r2_s\right)^2 \cdot \left(As2_s\right)\right]}$ $\quad$ Total shear load $\quad Fstot2_{s,q} := Fs2_{s,q}$

(Note: The direct shear is taken by the shear pin.)

The stack commands below are used to stack applied axial load (P2), applied shear load (V2), and applied moment (M2) in asending order per bolt. These loads are put into an array with the element/bolt number and load case number from above. See the "Output" file below. Notice how there is only 5 bolts, since bolt number 12 is not included.

$$P2 := \text{stack}\left[\left(Ft2^T\right)^{\langle 3\rangle}, \left(Ft2^T\right)^{\langle 7\rangle}, \left(Ft2^T\right)^{\langle 8\rangle}, \left(Ft2^T\right)^{\langle 12\rangle}, \left(Ft2^T\right)^{\langle 13\rangle}\right]$$

$$V2 := \text{stack}\left[\left(Fstot2^T\right)^{\langle 3\rangle}, \left(Fstot2^T\right)^{\langle 7\rangle}, \left(Fstot2^T\right)^{\langle 8\rangle}, \left(Fstot2^T\right)^{\langle 12\rangle}, \left(Fstot2^T\right)^{\langle 13\rangle}\right]$$

$$M2 := \text{stack}(M2, M2, M2, M2, M2)$$

The "Output2" file below outputs an array from left to right starting with the element identification (ID2), Load case number (LC2), applied load on the bolt (P2), applied shear on the bolt (V2), and applied moment on the bolt (M2). See the output array example above. The array is written to a text file.

$$Output2 := \text{augment}\left(ID2, LC2, \frac{P2}{lbf}, \frac{V2}{lbf}, \frac{M2}{in \cdot lbf}\right)$$

(Note: Since the ID2 and LC2 numbers are dimensionless, the P2, V2, and M2 values are divided by their units in order to make the array dimensionless.)

Size of the "Output2" Array: $\text{rows}(Output2) = 1280$

(5 (1/2" bolts) x 64 load cases) x 4 joints = 1280 load cases

$$\text{WRITEPRN}(\text{"output_forces_loweripvcf_r2_abortland_fs.txt"}) := Output2$$

Bolt Fail-safe Results

$$data_fs := \text{READPRN}(\text{"output_forces_loweripvcf_r2_abortland_fs.txt"})$$

$$s := 1 .. \text{rows}(data_fs)$$

Fail-safe Loads, abort landing

Applied tensile load $P_FS3_s := data_fs_{s,3} \cdot lbf$ $ID_FS3_s := data_fs_{s,1}$

Applied shear load $V_FS3_s := data_fs_{s,4} \cdot lbf$ $LC_FS3_s := data_fs_{s,2}$

Applied bending moment $M_FS3_s := data_fs_{s,5} \cdot in \cdot lbf$

Fail-safe Factors of Safety

Ultimate $SFu_FS3 := 1.0$

Joint Separation $SFsep_FS3 := 1.0$

This file uses the calculations shown in \\escfil02\2i11_mathcad\8307_bolts\ multi_bolt_stiffness_insert_FS_RevC

Fail-Safe Stiffness File

Bolt Fail-safe Load data

Joint separation load $\max(Psep_FS) = 2819.999 \cdot lbf$

Max. load on the bolt(ultimate) $\max(Pb_FS) = 18276.2 \cdot lbf$

Summary of fail-safe Margins for bolt:

Joint separation	$MS_minFS3_{1,1} = 2.200$	Total Thread shear Ultimate	$MS_minFS3_{5,1} = 0.482$
Direct Tension Ultimate	$MS_minFS3_{2,1} = 7.457$	Shear Ultimate	$MS_minFS3_{6,1} = 2.66$
Total Tension Ultimate	$MS_minFS3_{3,1} = 0.501$	Bending Ultimate	$MS_minFS3_{7,1} = 10$
Direct Thread shear Ultimate	$MS_minFS3_{4,1} = 7.35$	Combined shear, tension and bending ultimate	$MS_minFS3_{8,1} = 0.4848$

Determination of the smallest fail-safe margin of safety for the bolt, and the failure mode:

$MSbolt_FS := \min(MS_FS3)$

$MSbolt_FS = 0.482$

Failure_Mode_FS = "Total Thread Shear Ultimate"

$MS_min_ID = 64012008$ Element Identification (64012) and Bolt Number (8) for Minimum Margin

$MS_min_LC = 2038$ Load Case Number for Minimum Margin

$MS_min_P = 2820$ Applied Tensile Load for Minimum Margin

$MS_min_V = -1804.8$ Applied Shear Load for Minimum Margin

$MS_min_M = 0$ Applied Bending Moment for Minimum Margin

Prepared By	Name	Date		File Name
	G. Reyes	03/06/06		LI_VC_500.mcd
Checked By	C. Bala		**Engineering and Science Contract Group** *Structural Analysis Section*	Draw ing No. SEG39135776
Title	Bolts from Lower Interface Plate to Vacuum Case - 0.50" Bolts			

Shear Pin Analysis for Lower Interface Plate to Vacuum Case

The Vacuum Case Assembly consists of four lower interface plates. Each lower interface plate has a shear pin (SDG39135755-001) installed with two bushings. The shear pin sits inside of a inner bushing SDG39135757-001 and the inner bushing sits inside of the outer bushing SDG39135757-003.

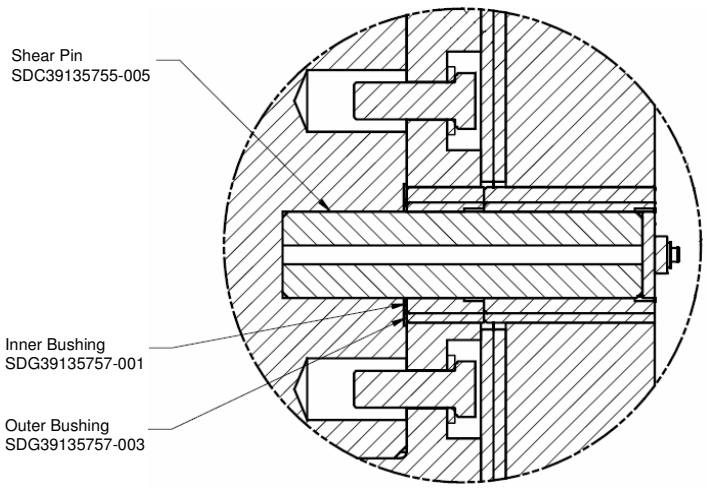

Cross Section of the Bolted Interface

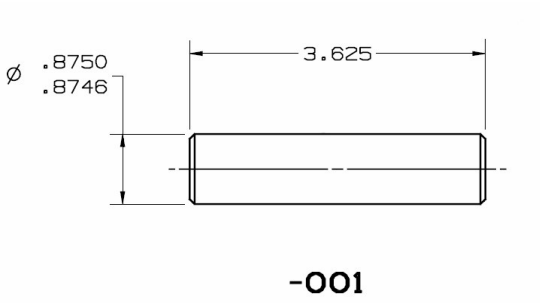

Shear Pin SDG39135755-001

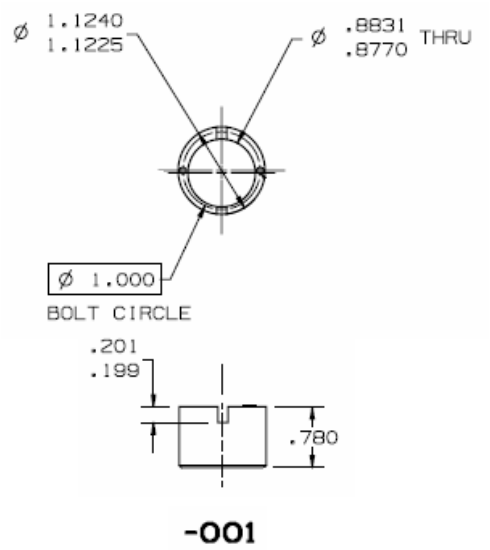

Inner Bushing SDG39135757-001

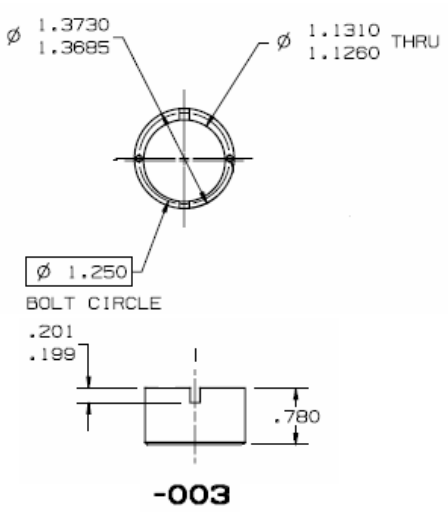

Outer Bushing SDG39135757-003

Geometry

Minimum Diameter of shear pin	$dp := 0.8746 \cdot in$	(Ref. Dwg. SDG39135755-001)
Outer diameter of outer bushing	$do := 1.3685 \cdot in$	(Ref. Dwg. SDG39135757-003)
Thickness of interface plate	$tp := 0.75 \cdot in$	(Ref. Dwg. SDG39135789)
Length of inner bushing	$tpin := 0.78 \cdot in$	(Ref. Dwg. SDG39135757-001)

Temperature Data

Shear Pin (Custom 455, H1000 bar, AMS5617):

Temperature correction factor for shear	$csp := 0.96$	(Ref. MIL-HDBK-5J, table 2.6.4.1.2)

Interface Plate (Al 7050-T7451 Plate):

Temperature correction factor for ultimate	$cpu := 0.91$	(Ref. MIL-HDBK-5J, fig. 3.7.4.2.1)
Temperature correction factor for yield	$cpy := 0.97$	

Bushings (Aluminum Bronze AMS4640, ASTM B150, alloy C63000):

Temperature correction factor for ultimate	$cbu := 0.95$	(Ref. Appendix C8)
Temperature correction factor for yield	$cby := 0.99$	

Material Properties

Shear Pin (Custom 455, H1000 bar, AMS5617):

Allowable shear stress	$Fsu := 124000 \cdot psi$	(Ref. MIL-HDBK-5J, table 2.6.4.0(b))

Interface Plate (Al 7050-T7451 Plate):

Allowable bearing stress	$Fbru := 131000 \cdot psi$	(Ref. MIL-HDBK-5J, table 3.7.4.0 (d))
	$Fbry := 101000 \cdot psi$	

Bushings (Aluminum Bronze AMS4640, ASTM B150, alloy C63000):

Allowable bearing stress of bushing	$Fbru := 125000 \cdot psi$	(Ref. Appendix C8, Rockwell Materials data sheet 09.12.01.01,1.0)
	$Fbry := 72000 \cdot psi$	

Shear Pin Analysis

Loads in shear pin from Bolt Analysis (Direct Shear)

$$Fsp_j := \sqrt{(Fy_j)^2 + (Fz_j)^2}$$

$rows(Fsp) = 256$

(4 joints x 64 load cases = 256 load cases)

Shear Area of pin

$$Ash := \frac{\beta \cdot dp^2}{4}$$

$Ash = 0.601 \cdot in^2$

Allowable shear load

$Pall := Fsu \cdot Ash \cdot csp$

$Pall = 71515.8\,lbf$

Margin of safety

$$MSp_j := \left(\frac{Pall}{Fsp_j \cdot SFu} - 1\right)$$

$min(MSp) = 0.89$

Bearing of Outer Bushing on Interface Plate

Bearing area

$Ab := do \cdot tp$

$Ab = 1.026 \cdot in^2$

Allowable bearing load

$Pbru := Fbru \cdot Ab \cdot cpu$

$Pbru = 116750.2\,lbf$

$Pbry := Fbry \cdot Ab \cdot cpy$

$Pbry = 71682\,lbf$

Margin of safety

$$MSu_j := \frac{Pbru}{Fsp_j \cdot SFu} - 1$$

$$MSy_j := \frac{Pbry}{Fsp_j \cdot SFy} - 1$$

$min(MSu) = 2.08$

$min(MSy) = 1.41$

Bearing of Shear Pin on Inner Bushing

Bearing area $Abp := dp \cdot tpin$ $Abp = 0.682 \cdot in^2$

Allowable bearing load $Pbrui := Fbru \cdot Abp \cdot cbu$ $Pbrui = 81009.8\ lbf$

$Pbryi := Fbry \cdot Abp \cdot cby$ $Pbryi = 48626.4\ lbf$

Margin of safety $MSbru_j := \frac{Pbrui}{Fsp_j \cdot SFu} - 1$ $MSbry_j := \frac{Pbryi}{Fsp_j \cdot SFy} - 1$

$\min(MSbru) = 1.14$

$\min(MSbry) = 0.63$

4.0 Strength Assessment of Payload Attach System Assembly

4.0 AMS-02 Passive Payload Attach System (PAS)

4.0.1 *Introduction*

The PAS is used to hold the AMS-02 payload to the ISS by means of an active claw on the station that holds the PAS capture bar, pulling the PAS down where the three PAS guide pins rest in the ISS guide vanes. The figure below shows the AMS-02 payload attached to the station truss.

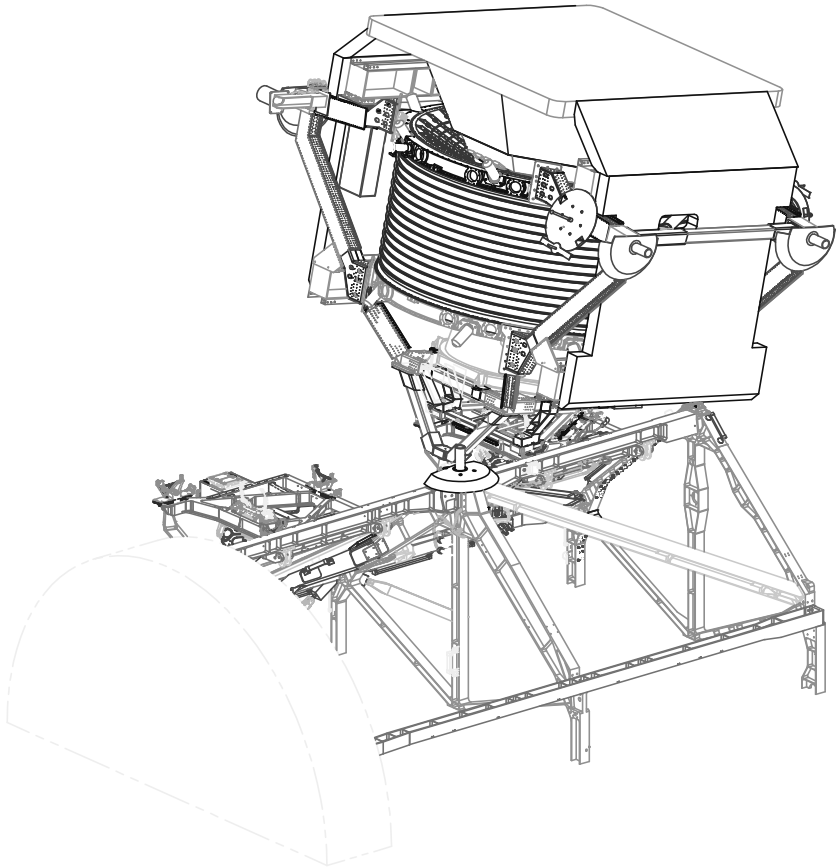

Figure 4.0-1:AMS-02 Attached to ISS

SSP 57003 gives a stiffness requirement of 13500 +/- 10% for the overall PAS/payload stiffness as measured at the center of the capture bar. When under load, 57003 also require that the capture bar must be able to be manually lowered by EVA astronauts.

The AMS-02 PAS is designed with two “bridge beams” the center of which are connected at each end of the capture bar through bearings. These two beams will be simply supported at each end. Pinning the beams at different locations will change the beam’s length, which will then vary the overall system stiffness. The system will be tested in various configurations until the desired stiffness is reached, and then the pins will be fixed in those locations.

4.0.1.1 *Description*

An overview of the PAS assembly is shown below in three views, with some of the major components labeled.

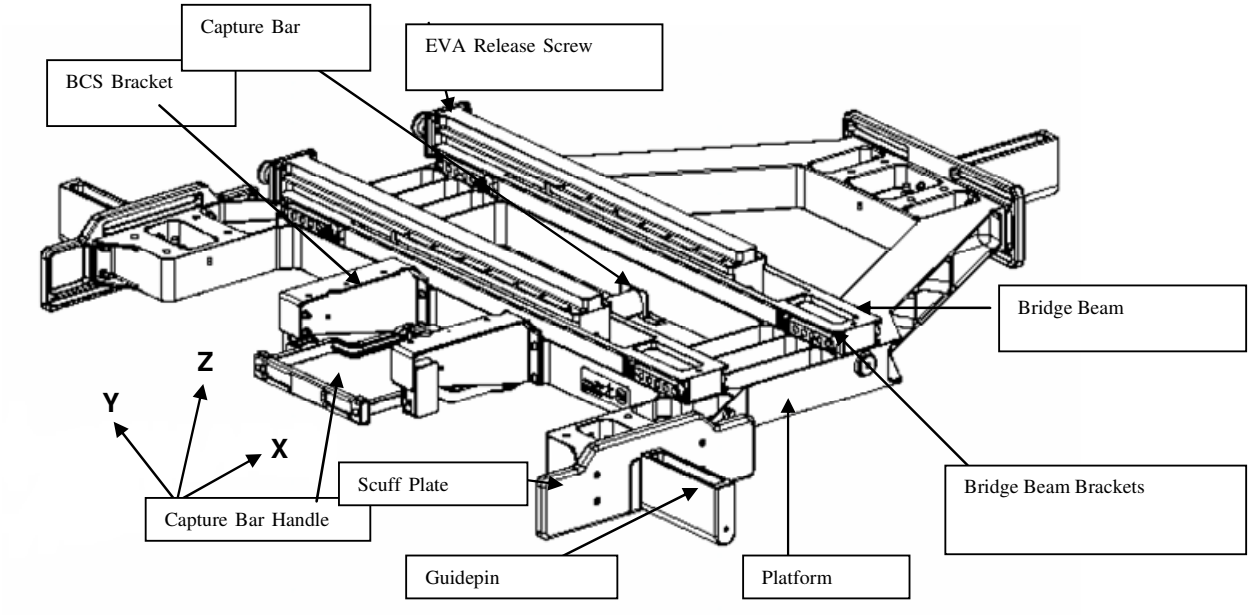

Figure 4.0-2 PAS Assembly

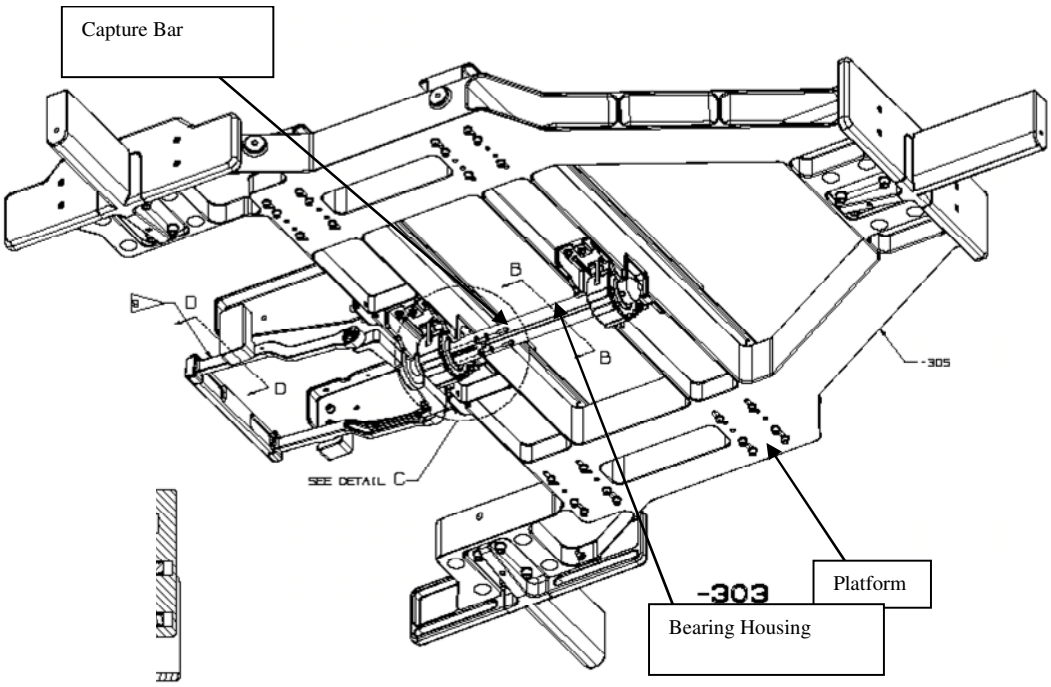

Figure 4.0-3 Underside of the PAS Assembly

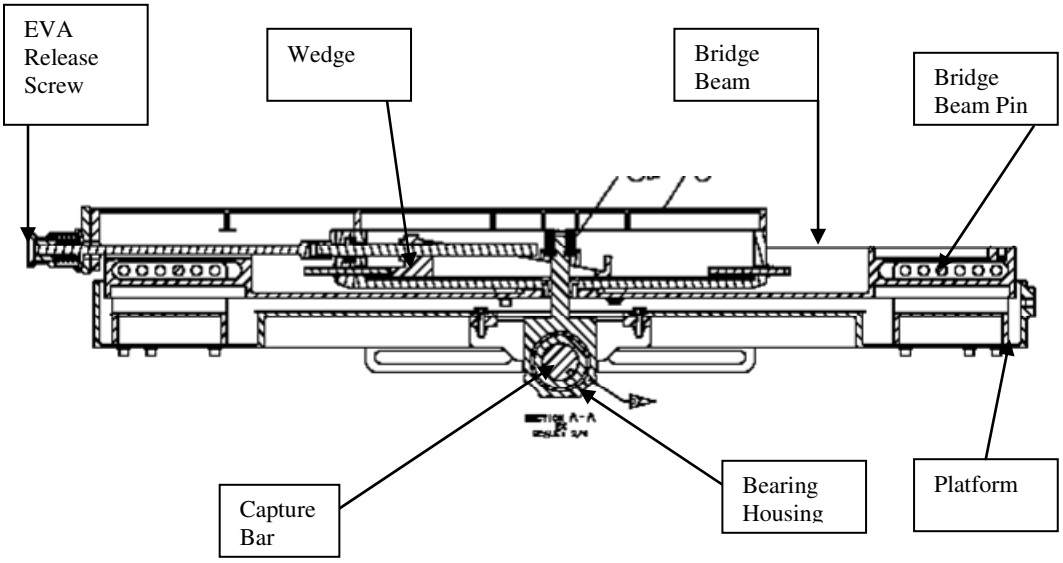

Figure 4.0-4 Cross Section View of Platform and Bridge Beam

The PAS consists of

1. Platform. Roughly triangular in shape, machined out of three inch thick 7050 plate.
2. Guidepins. Machined out of 7050 plate. Attached to the vertices of the triangle. The

forward guide pin takes Y and Z translational forces. The two rear pins take X and Z translational forces. (Axis refer to the analysis coordinate system)

3. Bridge beams. "Hat" section beams machined out of three-inch thick 7050 plates.
4. Bridge beam brackets. Steel "U" shaped brackets that the bridge beams ride in. Mounting pins attach the bridge to the brackets. The brackets then sit on the platform. The brackets and bridge beams have six mounting holes, allowing the effective length of the bridge beam to be changed.
5. Release mechanism. A machined box with a cover. The actual mechanism has a triangular wedge upon which rides a triangular washer/nut that holds the capture bar bearing shaft. An EVA astronaut moves the wedge in the Y direction by means of a screw that is turnable. This lowers the capture bar, releasing it from the active PAS claw.
6. Bearing housing/shaft. Spherical bearing for the capture bar to sit in. The bearing housing is machined into the end of an A286 shaft.
7. Capture bar. Round bar of A286 steel. The bar has a groove that is used to retain the bar and prevent it from being totally removed from the bearing/housing. There is a handle attached to one end of the bar that allows the EVA astronauts to remove the bar once it has been lowered by the EVA release screws.
8. BCS Bracket/camera. The berthing camera is mounted to two brackets, which are attached to the rear of the PAS platform.

4.0.2 *Loading*

The hardware will see three loading conditions:

1. Capture bar loading. Maximum applied loading at the AMS-02 location is 6430 lbs in the negative Z direction. Nominal loading is 5650 lbs. Analysis will be performed using the maximum loading. The first figure below shows the active PAS. The second figure shows the PAS platform in the berthed condition with the active PAS claw closed.

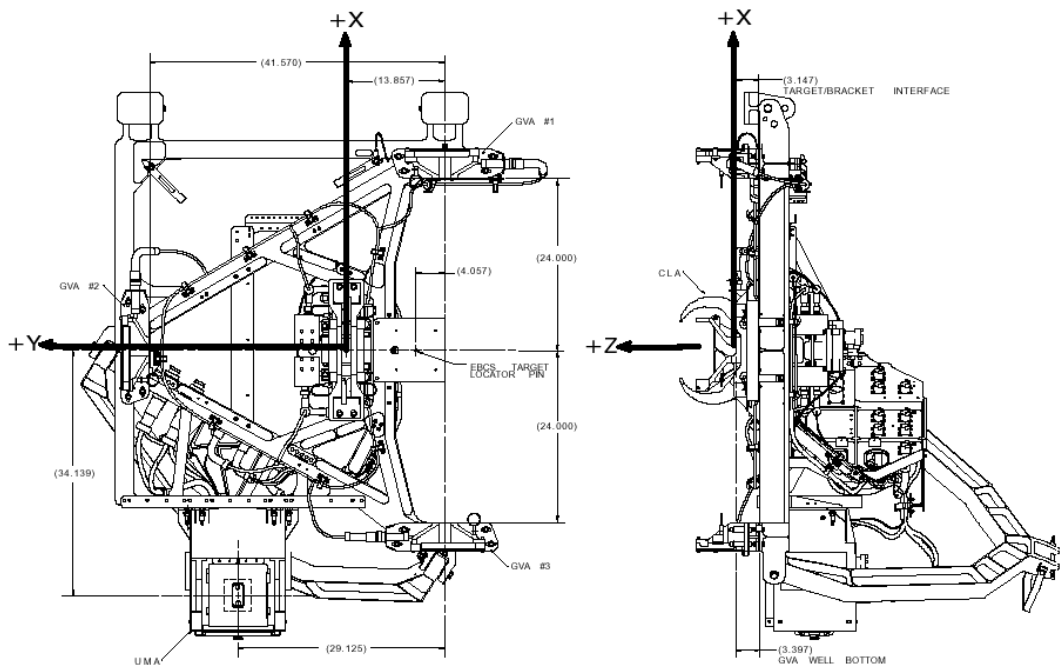

Figure 4.0-5 Active PAS with UCCAS Coordinate System

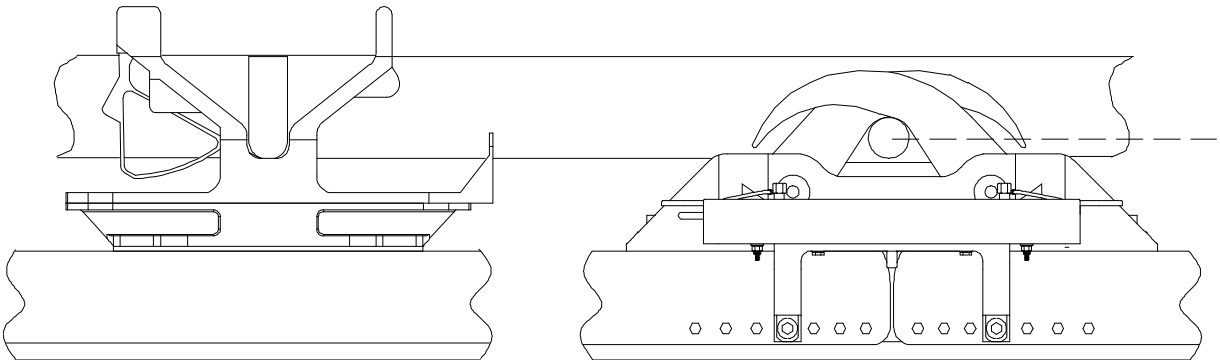

Figure 4.0-6 Payload Berthed Condition

2. On-orbit loading. These loads result from Berthing Load (latch disengaged) and operational loads (latched+ EVA misc. events). For analysis it is assumed that the capture bar is engaged during these loads. Forces are given in ISS DAC-8 at the capture bar. These forces were moved to the AMS payload c.g. and converted to acceleration load factors so they could be applied to the AMS-02 model. This is explained below. These on-orbit loads result in slight increases in the maximum load that the capture bar sees.
3. Liftoff/landing load factors. The PAS is connected to the AMS-02 thru the lower USS structure. During liftoff/landing the PAS sees accelerations loads due to its weight, plus loads imparted due to movement of the USS hardware.

4.0.2.1 *Load Factor Derivation of On-Orbit Loads for AMS-02*

The loads for the PAS are derived from ISS DAC-8 Structural Loads Report; Document D684-10019-02-01-02 Rev E (shown in Figure 4.0-7 and Figure 4.0-8). The ISS DAC-8 loads require the following additional operations before they can be used on the PAS.

1. The loads have to be transformed to the C.G. of the AMS-02.
2. Various combinations of the loads are used to generate 64 load cases by utilizing the translational and rotational accelerations.

The detailed derivations are shown in Appendix C16.

Peak Load Cases

Case ID	*Axial (lbs)*	*RSS Shear (lbs)*	*RSS Moment (in-lbs)*	*Torsion (in-lbs)*
D858BEP10464	**776.6**	615.3	18,686.9	19,150.5
D860PJM20602	126.8	**764.2**	17,621.3	3,579.5
D882PDM20557	161.4	342.3	**32,479.5**	3,527.0
D858BEP10467	525.9	726.3	20,594.7	**32,417.7**

Figure 4.0-7 Peak On-Orbit Load Cases from page 7-434

Resultant Berthing Contact Forces

Case ID	Axial (lbs)	RSS Shear (lbs)	RSS Moment (in-lbs)	Torsion (in-lbs)
D858BEPB0001	662	610	18995	10415
D858BEPB0002	748	650	21680	9029
D858BEPB0003	496	460	14350	13491
D858BEPB0004	862	439	24960	8956

Figure 4.0-8 Peak Berthing Contact Load Cases from page 7-716

Table C16-1	Load Combination Table	p. C16-1
Table C16-2	Inertia Matrix of Model	p. C16-1
Table C16-3	Mass and CG Location	p. C16-1
Table C16-4	Location of Applied Loads and Original Loads	p. C16-1
Table C16-5	On-Orbit Load Cases	p. C16-3
Table C16-6	Accelerations at CG of AMS-02 Payload	p. C16-4
Table C16-7	Consistent Load Cases On-Orbit	p. C16-7
Figure C16-1	VB Scripts Used To Transform Loads To The CG Location	p. C16-2

Figure 4.0-9 The Following Load Derivations And Load Cases Can Be Found In Appendix C16.

4.0.2.2 *Factors of Safety*

The hardware is designed with a yield factor of 1.25 and ultimate factor of 2.0 against limit loads except for the Vertex Bracket.

The design of the Vertex bracket was based on a yield factor of safety of 1.25 and an ultimate factor of safety of 2.0 for untested hardware. A static test of the vertex bracket is done and the stress analysis for the vertex bracket will use a yield factor of safety of 1.10 and an ultimate factor of safety of 1.4 for tested hardware.

Ref. AMS-02 :"Structural Verification Plan" JSC 28792 REV. E

4.0.3 *Analysis Technique*

A FEM model was built of the PAS hardware using FEMAP.

1. Platform was modeled as quad and tri plate elements, with RBEs representing thick regions. In some high stress areas tapered shell elements were used in order to attempt to model the change in thickness between areas.
2. Guidepins were modeled as beam elements and attached to the platform with RBEs.
3. The bridge beams were modeled as beam elements. Since the bridge beams are truly simply supported beams, the RBEs connecting them to the U brackets were released in all DOF except for the PAS Z DOF. There are six of these 1 DOF RBEs on each end of the beams. Depending on what analysis case is being run, 5 of each six RBEs is commented out, leaving one representing the actual pin location.
4. Attached to the bridge beams are beams representing the release mechanism. RBEs attach the bridge beams to the release mechanism beams, which are then attached to the PAS platform.
5. Beams representing the capture bar bearing shafts are then attached to the release mechanism beams.
6. The capture bar is modeled as beams attached to the spherical bearings with only Y and Z translations fixed.
7. Attached on one end of the capture bar is an RBE connected to a CONM2 card representing the capture bar handle.
8. Berthing camera is modeled as a lumped mass CONM2 card with two RBE “spiders”

connecting it to the PAS platform.

9. The scuff plates and BCS bracket are not included in this model.

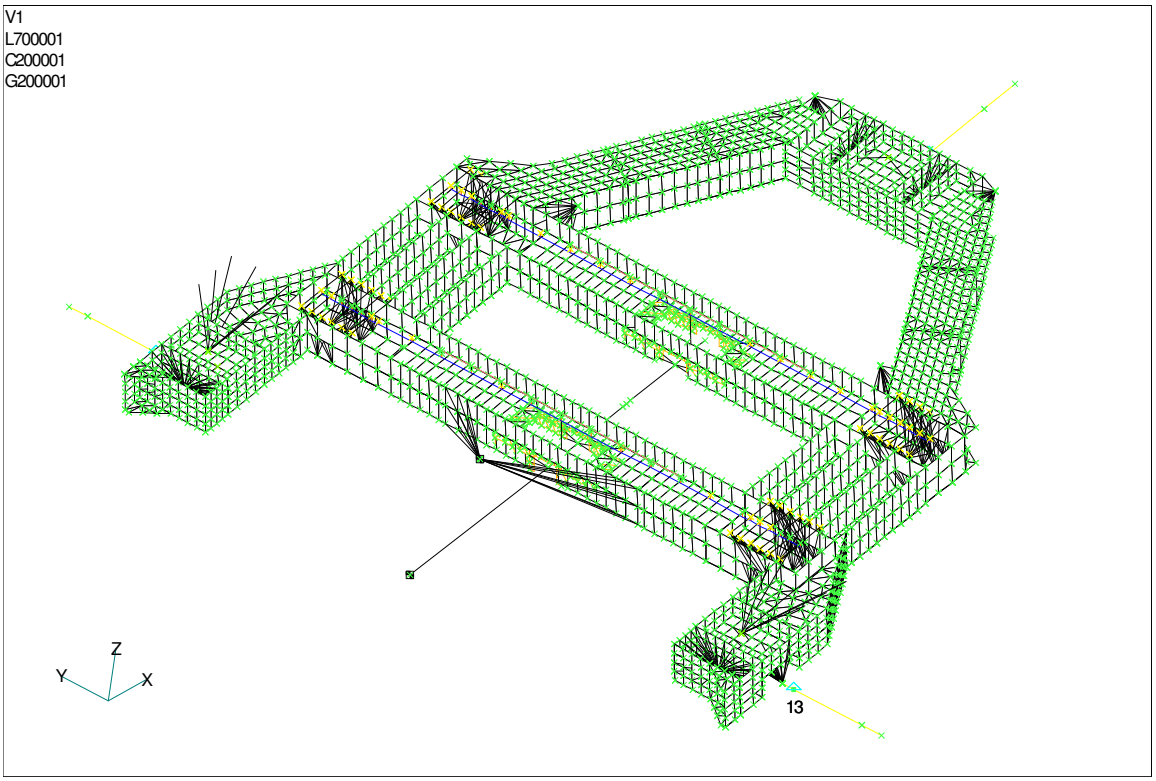

Figure 4.0-10 PAS Assembly FEMAP Model

Note that the coordinate system used for analysis is rotated 90 about the Z as compared to the UCCAS coordinate system.

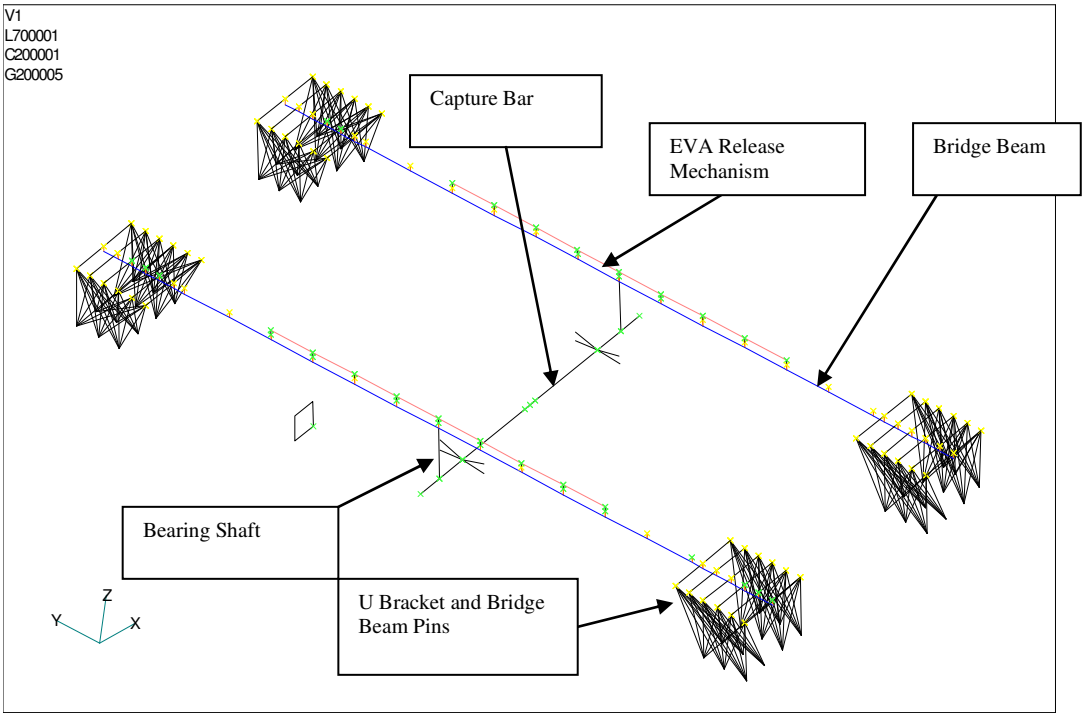

Figure 4.0-11 FEMAP Model of Bridge Beams with Capture Bar Assembly

This model was then attached to the full AMS-02 model using RBE and CBUSH elements. The CBUSH elements were adjusted for stiffness to represent the actual joint stiffness. The CBUSH stiffness may be adjusted once the static testing is performed in order to correlate the model to the test results.

The capture bar load was applied using a FORCE card of 6430 pounds. Six separate cases were run, one for the bridge pins in the each location. For these cases the PAS was constrained at the three guide pins.

Deflections were recovered and the stiffness in both configurations was calculated. New load cases were run with on-orbit loads applied as accelerations to the FEM, with capture bar deflections applied using a SPCD card. This is necessary since for these load cases the capture itself must be constrained in the Z DOF.

4.0.3.1 *Model Checks*

Rigid body checks were performed using NASTRAN. Results from the check .f06 file are shown below. The KGG, KNN and KFF matrices all pass with low strain energy.

```
*** USER INFORMATION MESSAGE 7570 (GPWG1D)
     RESULTS OF RIGID BODY CHECKS OF MATRIX KGG      (G-SET)  FOLLOW:
     PRINT RESULTS IN ALL SIX DIRECTIONS AGAINST THE LIMIT OF   1.000000E-02
           DIRECTION        STRAIN ENERGY        PASS/FAIL
           ---------        -------------        ---------
             1               2.041040E-07          PASS
             2               5.159429E-07          PASS
             3               3.911161E-07          PASS
             4               3.191360E-04          PASS
             5               8.701639E-04          PASS
             6               2.851847E-04          PASS

*** USER INFORMATION MESSAGE 7570 (GPWG1D)
     RESULTS OF RIGID BODY CHECKS OF MATRIX KNN      (N-SET)  FOLLOW:
     PRINT RESULTS IN ALL SIX DIRECTIONS AGAINST THE LIMIT OF   1.000000E-02
           DIRECTION        STRAIN ENERGY        PASS/FAIL
           ---------        -------------        ---------
             1               9.614816E-09          PASS
             2               1.016599E-07          PASS
             3               2.960342E-07          PASS
             4               5.635142E-04          PASS
             5               7.701034E-04          PASS
             6               1.701003E-04          PASS

*** USER INFORMATION MESSAGE 7570 (GPWG1D)
     RESULTS OF RIGID BODY CHECKS OF MATRIX KNN+AUTO (N+AUTOSPC-SET)  FOLLOW:
     PRINT RESULTS IN ALL SIX DIRECTIONS AGAINST THE LIMIT OF   1.000000E-02
           DIRECTION        STRAIN ENERGY        PASS/FAIL
           ---------        -------------        ---------
             1               9.614816E-09          PASS
             2               1.016599E-07          PASS
             3               2.960342E-07          PASS
             4               5.635142E-04          PASS
             5               7.701034E-04          PASS
             6               1.701003E-04          PASS

*** USER INFORMATION MESSAGE 7570 (GPWG1D)
     RESULTS OF RIGID BODY CHECKS OF MATRIX KFF      (F-SET)  FOLLOW:
     PRINT RESULTS IN ALL SIX DIRECTIONS AGAINST THE LIMIT OF   1.000000E-02
           DIRECTION        STRAIN ENERGY        PASS/FAIL
           ---------        -------------        ---------
             1               9.614816E-09          PASS
             2               1.016599E-07          PASS
             3               2.960342E-07          PASS
             4               5.635142E-04          PASS
             5               7.701034E-04          PASS
             6               1.701003E-04          PASS
```

A further check is that of rigid body modes. The first 7 unconstrained modes are shown below. There are six rigid body modes (~= 0.0), and then good separation with the first non-rigid body mode.

```
                                   R E A L   E I G E N V A L U E S
MODE    EIGENVALUE        RADIANS          CYCLES          GENERALIZED      GENERALIZED
 NO.      ORDER                                              MASS            STIFFNESS
1     -8.568212E-08     2.927151E-04     4.658705E-05      1.000000E+00     -8.568212E-08
2     -1.582130E-09     3.977600E-05     6.330547E-06      1.000000E+00     -1.582130E-09
3      6.785376E-08     2.604875E-04     4.145788E-05      1.000000E+00      6.785376E-08
4      7.992473E-08     2.827096E-04     4.499463E-05      1.000000E+00      7.992473E-08
5      1.731422E-07     4.161035E-04     6.622494E-05      1.000000E+00      1.731422E-07
6      1.966332E-07     4.434334E-04     7.057462E-05      1.000000E+00      1.966332E-07
7      6.605814E+02     2.570178E+01     4.090565E+00      1.000000E+00      6.605814E+02
```

This table gives the natural frequencies of the entire AMS-02 payload while attached to the ISS. Note that for this calculation, as per SSP 57003, the PAS is fully constrained (all six DOF) at the guidepins. As required, the first frequency is greater than 1.5 Hz.

Table 4.0-1: Natural Modes of AMS/PAS On-orbit

Mode	Extraction	Eigenvalues	Radians	Cycles
1	1	106.96	10.34	1.65
2	2	188.45	13.73	2.18
3	3	269.41	16.41	2.61

4.0.4 *Analysis*

4.0.4.1 *Stiffness*

The PAS is used to hold the AMS-02 payload to the ISS by means of an active claw on the station that holds the PAS capture bar, pulling the PAS down where the three PAS guide pins rest in the ISS guide vanes.

SSP 57003 gives a stiffness requirement of 13500 +/- 10% for the overall PAS/payload stiffness as measured at the center of the capture bar. When under load, 57003 also require that the capture bar must be able to be manually lowered by EVA astronauts. Since this model was changed the stiffness needs to be rechecked to confirm it has not been affected significantly. This comparison is shown in Table 4.0-2 Stiffness calculations of PAS.

The AMS-02 PAS is designed with two "bridge beams" the centers of which are connected at each end of the capture bar through bearings. These two beams will be simply supported at each end. Pinning the beams at different locations will change the beam's length, which will then vary the overall system stiffness. The system will be tested in various configurations until the desired stiffness is reached, and then the pins will be fixed in those locations.

Capture bar loading. Maximum applied loading at the AMS-02 location is 6430 lbs in the negative Z direction. Nominal loading is 5650 lbs. Analysis will be performed using the maximum loading.

The model has to simulate the combined inertia and static claw load as well as the constraints. In the Nastran simulation the method used, was to first run the model, unconstrained at the Claw location and with the static load applied. The results of this run are shown in case 1119 in Table 4.0-2 Stiffness calculations of PAS. The deflection from this load case was input into the inertia run as a SPCD constraint.

Table 4.0-2 Stiffness calculations of PAS

	Load Case	Case 1120	Case 1119	Units	Percent Difference	Data Location
	Point ID.	802112	802112			
	Applied Load	Displacement (in)	Load (lbf)	(in) or (lbf)		
Load in Claw Cord. System	T1 (cd1)	0.00000	0.0	(in) or (lbf)	NA	NASTRAN input
	T2 (cd2)	0.00000	0.0	(in) or (lbf)	NA	NASTRAN input
	T3 (ccd3)	-0.49278	-6430.0	(in) or (lbf)	NA	NASTRAN input
Load in Orbiter Cord.	T1	0.00000	0.0	(in) or (lbf)	NA	=-1*cd2
	T2	-0.10245	-1336.9	(in) or (lbf)	NA	=cd1*c12+cd3*s12
	T3	-0.48201	-6289.5	(in) or (lbf)	NA	=-1*cd1*s12+cd3*c12
Load lbf (P)		-6430.0	-6430.0	(lbf)	NA	Per. Requirements
Translation in Orbiter Cord. System	T1 (od1)	0.07534	0.08089	(in)	-7.11%	From NASTRAN
	T2 (od2)	-0.00041	-0.00048	(in)	-15.65%	From NASTRAN
	T3 (od3)	-0.48778	-0.50566	(in)	-3.60%	From NASTRAN
	R1	-0.00009	-0.00009	(rad)	-5.54%	From NASTRAN
	R2	0.00975	0.01009	(rad)	-3.41%	From NASTRAN
	R3	-0.00004	-0.00004	(rad)	-2.43%	From NASTRAN
Translation in Claw Cord.	T1	0.00041	0.00048	(in)	-15.65%	=-1*od2
	T2	-0.02772	-0.02601	(in)	6.38%	=od1*c12+od3*s12
	T3 (d)	-0.49278	-0.51143	(in)	-3.71%	=-1*od1*s12+od3*c12
Stiffness (k)		13048.419	12572.707	(lbf/in)	3.71%	=P/d
Target Stiffness (Tark)		13500	13500	(lbf/in)	NA	Per. Requirements
Min Targ		12150	12150	(lbf/in)	NA	=0.9*Tark
Max targ		14850	14850	(lbf/in)	NA	=1.1*Tark
Percent Error		-3.35%	-6.87%	%	-69.00%	=(k-Tark)/Tark
Cos(12)	(c12) =	0.978147601	0.978147601	NA	NA	=cos(12deg)
Sin(12)	(s12) =	0.207911691	0.207911691	NA	NA	=sin(12deg)
Note: Percent difference is ("case 1120" - "case 1119")/Average("case 1120" and "case 1119")						

4.1 Vertex Bracket

4.1 AMS-02 PAS Vertex Bracket

4.1.1 *Margins of Safety*

Table 4.1-1 Minimum Margin Of Safety Summary

Part/Dwg Number	Part Name/ Description	Material Heat Treatment	Critical Load Condition	Failure Mode	Margin of Safety	Reference Page
SDG39135813	PAS Vertex Bracket	AL ALY 7050-T7451	Consistent On-Orbit Load Factor	Solid Min Prin Stress	0.02 (u)	4.1-13

Notes:

1. See Table 4.1.7-6, Set 139, ID 1056000
2. Factors of Safety are 1.5 for Ultimate and 1.1 for Yield for tested hardware.
3. Boundary condition is at PAS Guide Pins and PAS handle locations.
4. 16 on-orbit load cases are applied.
5. u = ultimate, y = yield

4.1.2 *Factors of Safety*

The design of the Vertex bracket was based on a yield factor of safety of 1.25 and an ultimate factor of safety of 2.0 for untested hardware. A static test of the vertex bracket is done and the stress analysis for the vertex bracket will use a yield factor of safety of 1.10 and an ultimate factor of safety of 1.5 for tested hardware.

Ref. AMS-02 :"Structural Verification Plan" JSC 28792 REV. E and “Structural Design and Verification Requirements, International Space Station” SSP 30559 Rev. C.

4.1.3 *Description of Structure*

Figure 4.1-1 below shows the locations of the vertex bracket in AMS-02. The bracket was machined out of 7050-T7451 Aluminum Alloy plate. The base of the vertex bracket bolts to the PAS platform and the other end which consists of the two clevis joint bolts to the 4.0 x 4.0 tube of the lower center body tube of the USS-02.

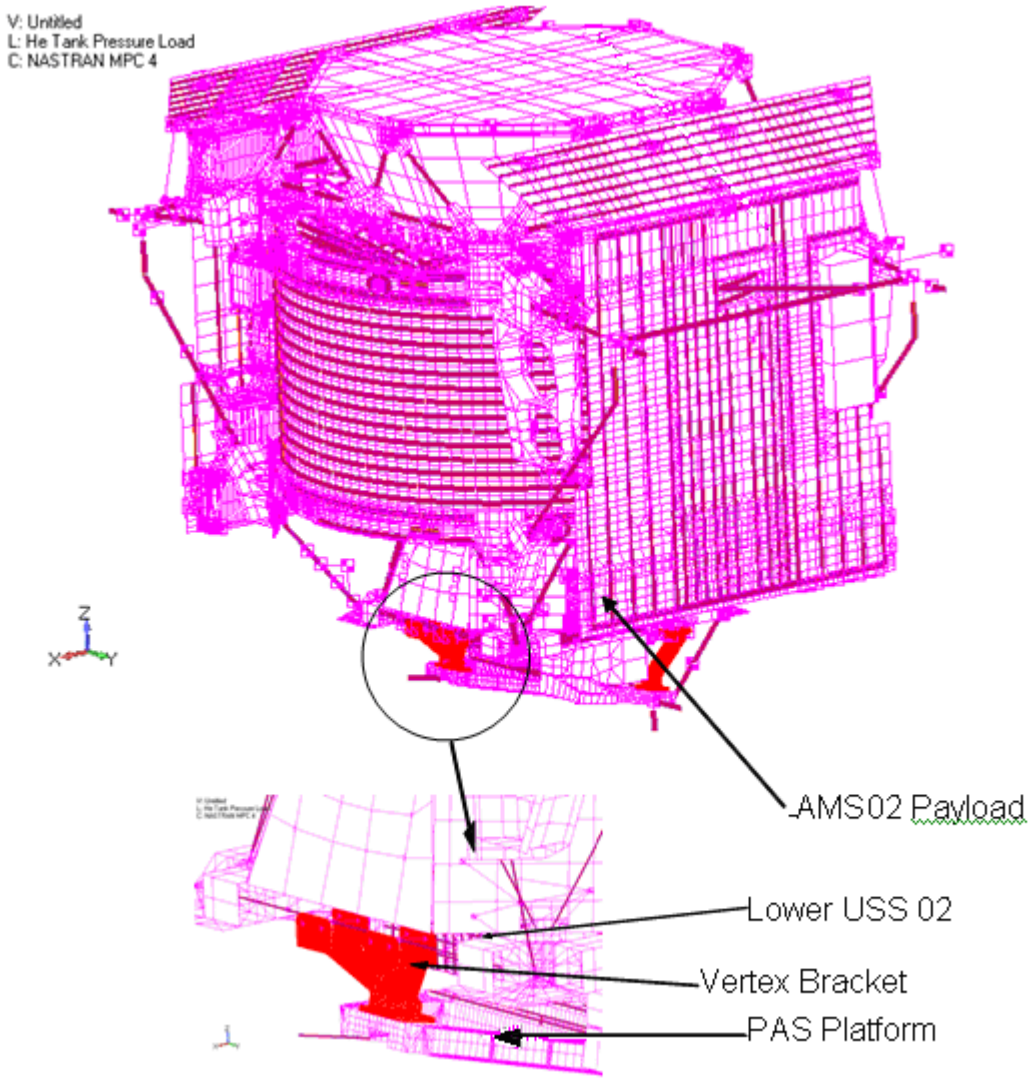

Figure 4.1-1 Location Of PAS Vertex Bracket In AMS-02

4.1.4 *Description of Model*

A FEM model was built for the vertex bracket hardware using FEMAP.

1. The part was modeled primarily of Mid-side node CTETA elements.
2. At the bolt holes, RBE2 rigid elements with DOF's 1, 2 & 3 are represented.
3. The interface between the Vertex Bracket and the Lower USS-02 are represented by RBE2 rigid elements with DOF's 1, 2 & 3.
4. The interface between the Vertex Bracket and the PAS Platform is represented by a CBUSH spring element with DOF's 1, 2, 3, 4, 5, and 6.
5. The interface between the Vertex Bracket and the PAS Platform is represented by individual CBUSH spring element with DOF's 1, 2, and 3 at each of the bolt locations.

6. The AMS-02 model was then constrained by the three PAS guide pins and the PAS Handle. The two aft guide pins were constrained with SPCs in DOF 2 and 3. The forward guide pin was constrained with a SPC in DOF 1 and 3. The PAS Handle was constrained with a SPC in DOF 1, 2, and 3.
7. All of the Flight, Abort Landing and On-Orbit Load Cases were run. For the On-Orbit Load Cases the PAS Handle was also constrained with a SPCD to represent the force due to the Claw pull down force.

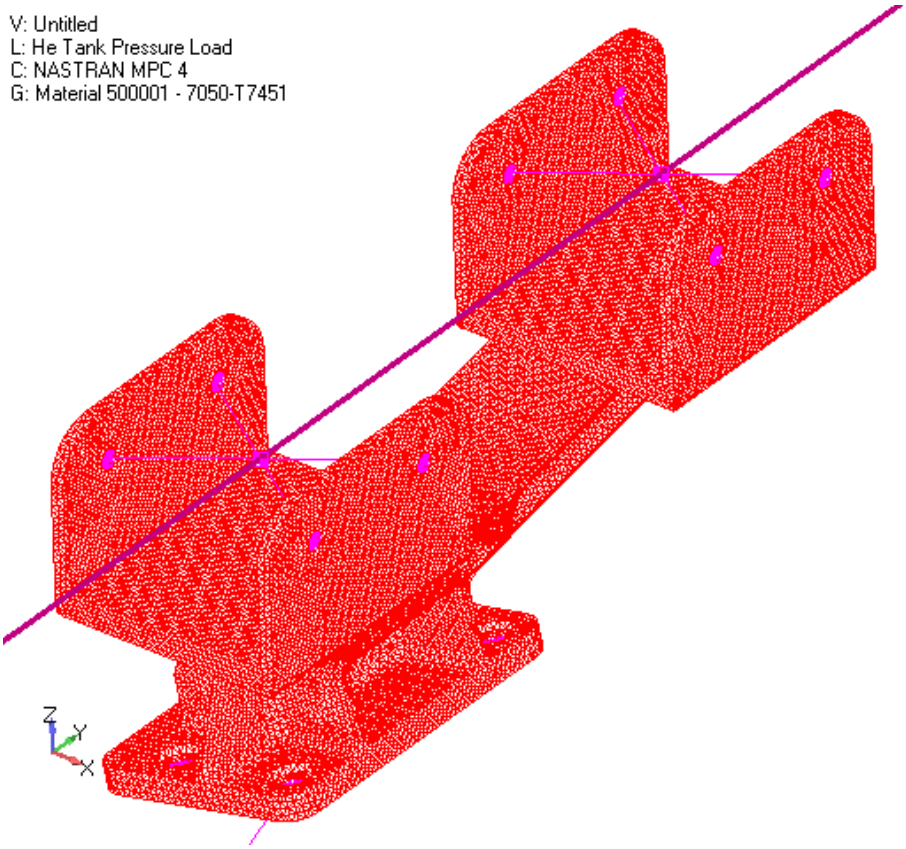

Figure 4.1-2 View Of Vertex Bracket Model

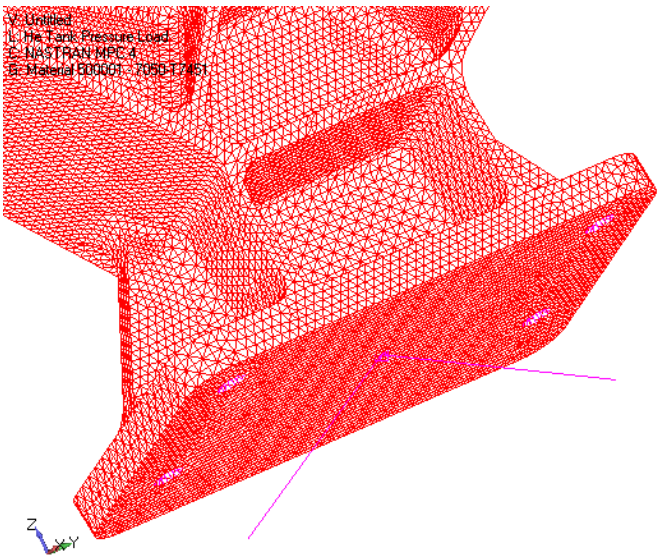

Figure 4.1-3 Second View Showing Bottom Of Vertex Bracket.

MSC/NASTRAN v.2005.0 was used as a solver for analyzing the complete math model of AMS-02 version 2-06.

Solid stresses were recovered and sorted to find the maximum of Principal, Von-Mises, and Shear in the Vertex Bracket using a combination of FEMAP and Excel.

(Note: The elements around the bolt holes connected to the RBEs were removed from the stress sort since the stresses at these locations are artificially high as shown thought the bearing analysis preformed in the bolt analysis section.)

File locations for NASTRAN runs, results were stored in .xdb files and compressed in to .zip file for archive purposes. the runs used in this analysis all end in "f.dat". Files are listed in Figure 4.1-4.

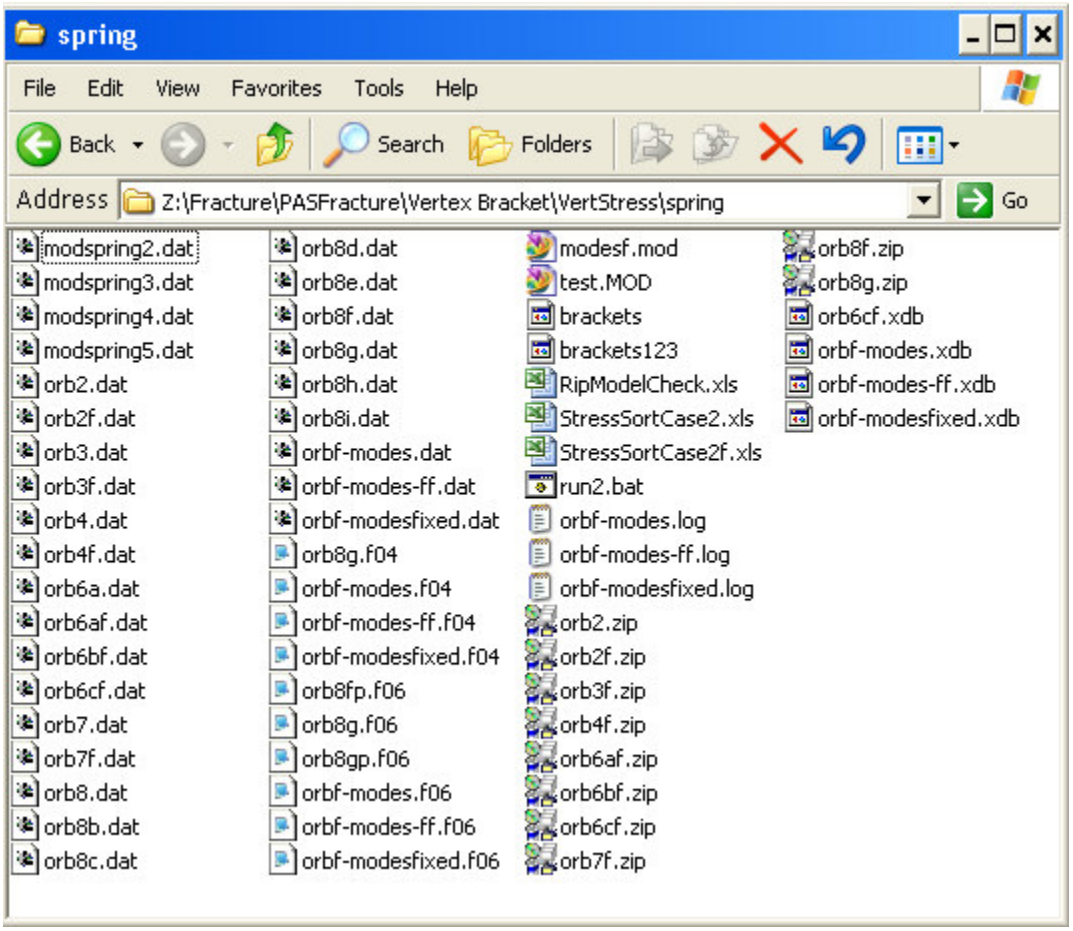

Figure 4.1-4 NASTRAN File Locations

4.1.5 *Model Checks*

Rigid body checks were performed using MSC/NASTRAN for the constrained and unconstrained models. A third run was made with the Model fixed in all six directions at the constraints. Table 4.1.5-1 shows results for the constrained model, these strain energy results show the G and N set as unconstrained but the F and A set as constrained so this model passes. Table 4.1.5-2 translational strain energy above below 6E-6 and rotational below 3E-3 while this is higher then performed, this is a large model with a significant number of solid elements. These results were judged acceptable. A final check of the fully fixed model is shown in Table 4.1.5-3.

Table 4.1.5-1 Fixed Strain Energy Check

Fixed Strain Energy Check				
DOF	G-SET	N-SET	F-SET	A-SET
1	3.40E-06	3.28E-06	1.48E+08	1.48E+08
2	1.25E-06	1.21E-06	5.06E+07	5.06E+07
3	5.12E-06	5.73E-06	6.95E+07	6.95E+07
4	5.24E-05	5.28E-04	2.26E+11	2.26E+11

Fixed Strain Energy Check				
5	2.80E-03	1.74E-03	6.57E+11	6.57E+11
6	1.87E-03	4.59E-05	4.21E+09	4.21E+09

Table 4.1.5-2 Free Free Strain Energy Check

Free Free Strain Energy Check				
DOF	G-SET	N-SET	F-SET	A-SET
1	3.40E-06	3.28E-06	3.28E-06	3.28E-06
2	1.25E-06	1.21E-06	1.21E-06	1.21E-06
3	5.12E-06	5.73E-06	5.73E-06	5.73E-06
4	5.24E-05	5.28E-04	5.28E-04	5.28E-04
5	2.80E-03	1.74E-03	1.74E-03	1.74E-03
6	1.87E-03	4.59E-05	4.59E-05	4.59E-05

Table 4.1.5-3 Fully Fixed Strain Energy Check

Fully Fixed in all 6 DOF Strain Energy Check				
DOF	G-SET	N-SET	F-SET	A-SET
1	3.40E-06	3.28E-06	1.69E+08	1.69E+08
2	1.25E-06	1.21E-06	9.78E+07	9.78E+07
3	5.12E-06	5.73E-06	7.04E+07	7.04E+07
4	5.24E-05	5.28E-04	4.48E+11	4.48E+11
5	2.80E-03	1.74E-03	7.47E+11	7.47E+11
6	1.87E-03	4.59E-05	1.08E+10	1.08E+10

A further check is that of rigid body modes. The first 7 unconstrained modes are shown in Table 4.1.5-5. There are six rigid body modes (~ 0.0), and then good separation with the first non-rigid body mode. The fixed modes run shown in Table 4.1.5-4 shows there are no unconstrained DOF. Table 4.1.5-6 shows the model fully fixed at the guide pins this run shows that the first mode is above 1.5 Hz as required in SSP 57003.

Table 4.1.5-4 Fixed Modes

Fixed Modes Check						
Cycles(Hz)	Tran X	Tran Y	Tran Z	Rot X	Rot Y	Rot Z
1.85	0.6390	0.1028	0.0000	0.0199	0.1380	0.0888
1.92	0.1668	0.4273	0.0004	0.0952	0.0423	0.2521
2.52	0.0008	0.2034	0.0004	0.1406	0.0006	0.5980
4.38	0.0000	0.0007	0.0001	0.0325	0.0000	0.0318
4.78	0.0000	0.0272	0.0006	0.1521	0.0005	0.0062
4.95	0.0157	0.0000	0.0054	0.0003	0.1882	0.0002
5.49	0.0001	0.0074	0.0020	0.0068	0.0001	0.0022
5.69	0.0207	0.0000	0.0334	0.0004	0.0198	0.0005
5.97	0.0004	0.0001	0.4600	0.0010	0.0002	0.0000
9.52	0.0002	0.0000	0.0003	0.0000	0.0007	0.0000

Table 4.1.5-5 Free Free Modes

Free Free Modes Check						
Cycles(Hz)	Tran X	Tran Y	Tran Z	Rot X	Rot Y	Rot Z
0.00	0.1698	0.3042	0.0448	0.3270	0.1478	0.0096
0.00	0.1992	0.0901	0.0437	0.0686	0.1541	0.4381
0.00	0.1468	0.1235	0.0103	0.0856	0.0857	0.5493
0.00	0.0723	0.0009	0.8980	0.0008	0.0255	0.0021
0.00	0.0455	0.4484	0.0008	0.4705	0.0379	0.0000
0.00	0.3664	0.0328	0.0023	0.0475	0.5490	0.0009
4.19	0.0000	0.0000	0.0000	0.0000	0.0000	0.0000

Table 4.1.5-6 Fully Fixed Modes

Fully Fixed in all 6 DOF S Modes Check						
Cycles(Hz)	Tran X	Tran Y	Tran Z	Rot X	Rot Y	Rot Z
2.02	0.7729	0.0109	0.0003	0.0034	0.1912	0.0042
2.13	0.0134	0.6613	0.0006	0.2288	0.0044	0.0717
3.00	0.0002	0.0466	0.0001	0.0190	0.0004	0.7459
4.70	0.0000	0.0040	0.0001	0.0001	0.0022	0.1533
4.81	0.0000	0.0203	0.0003	0.1555	0.0002	0.0056
4.99	0.0115	0.0000	0.0055	0.0001	0.1638	0.0054
5.51	0.0001	0.0090	0.0014	0.0091	0.0002	0.0079
5.76	0.0209	0.0001	0.0042	0.0002	0.0099	0.0022
6.07	0.0000	0.0000	0.4448	0.0011	0.0002	0.0000
9.52	0.0000	0.0000	0.0002	0.0000	0.0000	0.0000

Last the Mass and CG are shown for each model. As expected the Mass is the same for all three configurations. Note the CG is about grid point 999999 which is close to the model CG location. Ideally the grid point would be at the CG location but due to portions of the model that can not be read into FEMAP correctly the cg as calculated by FEMAP is slightly different. This difference is shown below.

Table 4.1.5-7 Fixed Mass Information

Fixed MASS Information			
MASS	CG X	CG Y	CG Z
39.14737	0.02973518	-0.004117	-0.056474

Table 4.1.5-8 Free Free Mass Information

Free MASS Information			
MASS	CG X	CG Y	CG Z
39.14737	0.029735	-0.00412	-0.05647

Table 4.1.5-9 Fully Fixed Mass Information

Fully Fixed in all 6 DOF S MASS Information			
MASS	**CG X**	**CG Y**	**CG Z**
39.14737	0.02973518	-0.004117	-0.056474

4.1.6 *Material and Temperature*

The Vertex Bracket is made of 7050-T7451 Aluminum Alloy. Material properties of 7050-T7451 are taken from Boeing Material Specification of BMS 7-323C, and MIL-HDBK-5H. Temperature limits at the interface of the PAS platform and vertex bracket are provided by the Thermal Analysis Group . For on-orbit condition, the temperature of 151°F is applied, see Appendix C2.

4.1.7 *Stress Analysis of the Vertex Bracket*

The critical stresses for the Vertex Bracket are compared to the ultimate and yield strength of 7050-T7451 Aluminum Alloy. All margins of safety are positive.

Table 4.1.7-1 Allowable For Vertex Bracket

Allowable	Value (psi)	Factor of Safety (Untested)	Temp. Reduction Factor	Factor of Safety (Tested)
Ftu	65000	2	0.91	1.5
Fty	55000	1.25	0.97	1.1
Fsu	44000	2	0.91	1.5

Since the model was created using Midside node tetrahedral elements NASPOST could not be used to sort the data. FEMAP's post processing capabilities were utilized instead. Results from On-Orbit cases are shown in Table 4.1.7-2. Results for Liftoff cases and Landing cases are shown in Table 4.1.7-3 and Table 4.1.7-4 respectively.

Table 4.1.7-2 Stress Analysis For On-Orbit Load Cases

Stress	Max Min	Set	ID	Value	Margin Untested	Margin Tested	Stress Ratio
Solid X Normal Stress	Minimum	23	1084297	-20615	Not checked	Not checked	
	Maximum	31	1096353	15746	Not checked	Not checked	
Solid XY Shear Stress	Minimum	31	1159796	-13250	0.51	1.01	
	Maximum	23	1056823	13366	0.50	1.00	
Solid Max Prin Stress	Minimum	31	1078809	-5957	3.96	5.62	0.10
	Maximum	31	1103844	28953	0.02	0.36	0.49
Solid Mean Stress	Minimum	23	1181166	-11166	Not checked	Not checked	
	Maximum	31	1049148	14638	Not checked	Not checked	
Solid Von Mises Stress	Minimum	37	1067044	6	7562.22	8593.57	
	Maximum	31	1056000	40744	0.05	0.19	

Stress	Max Min	Set	ID	Value	Margin Untested	Margin Tested	Stress Ratio
Solid Y Normal Stress	Minimum	23	1115720	-25890	Not checked	Not checked	
	Maximum	31	1080126	17999	Not checked	Not checked	
Solid YZ Shear Stress	Minimum	31	1153225	-16120	0.24	0.66	
	Maximum	23	1110381	16031	0.25	0.67	
Solid Min Prin Stress	Minimum	31	1056000	-41683	(0.29)	(0.05)	0.70
	Maximum	23	1000190	6739	3.39	4.85	0.11
Solid Z Normal Stress	Minimum	31	1056000	-40955	Not checked	Not checked	
	Maximum	31	1024496	21071	Not checked	Not checked	
Solid ZX Shear Stress	Minimum	23	1067223	-13065	0.53	1.04	
	Maximum	31	1103844	10867	0.84	1.46	
Solid Int Prin Stress	Minimum	31	1035574	-8879	2.33	3.44	0.15
	Maximum	41	1028769	8465	2.49	3.66	0.14

Table 4.1.7-3 Stress Analysis For Liftoff Load Cases

Stress	Max Min	Set	ID	Stress(psi)	Margin Untested	Margin Tested	Stress Ratio
Solid X Normal Stress	Minimum	3	1161215	-4335	Not checked	Not checked	
	Maximum	19	1160925	4719	Not checked	Not checked	
Solid XY Shear Stress	Minimum	23	1056823	-2606	6.68	9.24	
	Maximum	3	1159796	2327	7.60	10.47	
Solid Max Prin Stress	Minimum	3	1000190	-2328	11.70	15.94	0.04
	Maximum	19	1077697	9547	2.10	3.13	0.16
Solid Mean Stress	Minimum	19	1045761	-3372	Not checked	Not checked	
	Maximum	3	1167940	3501	Not checked	Not checked	
Solid Von Mises Stress	Minimum	53	1149294	0	310105.81	352393.10	
	Maximum	19	1077697	9321	3.58	4.20	
Solid Y Normal Stress	Minimum	19	1083799	-4216	Not checked	Not checked	
	Maximum	19	1115720	5649	Not checked	Not checked	
Solid YZ Shear Stress	Minimum	19	1110381	-3277	5.11	7.14	
	Maximum	19	1098341	2364	7.47	10.29	
Solid Min Prin Stress	Minimum	3	1167940	-7218	3.10	4.46	0.12
	Maximum	3	1156222	1564	17.91	24.21	0.03
Solid Z Normal Stress	Minimum	3	1167940	-6928	Not checked	Not checked	
	Maximum	19	1077697	9397	Not checked	Not checked	
Solid ZX Shear Stress	Minimum	19	1158596	-1997	9.03	12.37	
	Maximum	19	1067223	2824	6.09	8.45	
Solid Int Prin Stress	Minimum	3	1110564	-2924	9.12	12.49	0.05
	Maximum	41	1028769	2616	10.31	14.07	0.04

Table 4.1.7-4 Stress Analysis For Landing Load Cases

Stress	Max Min	Set	ID	Value	Margin Untested	Margin Tested	Stress Ratio
Solid X Normal Stress	Minimum	58	1084297	-4843	Not checked	Not checked	
	Maximum	41	1139376	5264	Not checked	Not checked	

Stress	Max Min	Set	ID	Value	Margin Untested	Margin Tested	Stress Ratio
Solid XY Shear Stress	Minimum	62	1159796	-2331	7.59	10.45	
	Maximum	58	1085207	2328	7.60	10.47	
Solid Max Prin Stress	Minimum	41	1180769	-2372	11.47	15.63	0.04
	Maximum	41	1160440	9674	2.06	3.08	0.16
Solid Mean Stress	Minimum	41	1028769	-4844	Not checked	Not checked	
	Maximum	41	1180769	3550	Not checked	Not checked	
Solid Von Mises Stress	Minimum	6	1135417	0	115079.76	130772.59	
	Maximum	41	1160440	8164	4.23	4.94	
Solid Y Normal Stress	Minimum	57	1051797	-4274	Not checked	Not checked	
	Maximum	58	1020829	4413	Not checked	Not checked	
Solid YZ Shear Stress	Minimum	19	1110381	-2366	7.46	10.28	
	Maximum	58	1181166	2448	7.18	9.90	
Solid Min Prin Stress	Minimum	41	1106800	-6943	3.26	4.68	0.12
	Maximum	41	1028769	2430	11.17	15.23	0.04
Solid Z Normal Stress	Minimum	41	1106800	-6932	Not checked	Not checked	
	Maximum	41	1160440	9425	Not checked	Not checked	
Solid ZX Shear Stress	Minimum	41	1139376	-2377	7.42	10.23	
	Maximum	41	1133904	2592	6.72	9.30	
Solid Int Prin Stress	Minimum	41	1034998	-2816	9.50	13.00	0.05
	Maximum	41	1028769	4115	6.19	8.58	0.07

Note: On-Orbit cases had negative margins with tested and untested factors of safety. For this configuration all load cases are shown with negative margins highlighted in red are shown in Table 4.1.7-5. This was a worst worst enveloping set of load cases. Because of the negative margins, a further analysis was completed using consistent load cases.

Table 4.1.7-5 Vertex Bracket Low Margin Table

Load Case	Element ID	Minimum Principal Stress (psi)	Margin with FS=2	Margin with FS=1.5	Stress Ratio
5001	1077697	-28647.3	0.03	0.38	0.48
5002	1077697	-31401.5	(0.06)	0.26	0.53
5003	1077697	-32892.3	(0.10)	0.20	0.56
5004	1077697	-35646.5	(0.17)	0.11	0.60
5005	1077697	-27800.1	0.06	0.42	0.47
5006	1077697	-30554.3	(0.03)	0.29	0.52
5007	1077697	-32045.1	(0.08)	0.23	0.54
5008	1077697	-34799.3	(0.15)	0.13	0.59
5009	1056000	-30614.3	(0.03)	0.29	0.52
5010	1056000	-28342	0.04	0.39	0.48
5011	1056000	-34851.4	(0.15)	0.13	0.59
5012	1056000	-32579.2	(0.09)	0.21	0.55
5013	1056000	-31214.7	(0.05)	0.26	0.53
5014	1056000	-28942.4	0.02	0.36	0.49

Load Case	Element ID	Minimum Principal Stress (psi)	Margin with FS=2	Margin with FS=1.5	Stress Ratio
5015	1056000	-35451.8	(0.17)	0.11	0.60
5016	1056000	-33179.5	(0.11)	0.19	0.56
5017	1077697	-24998.8	0.18	0.58	0.42
5018	1077697	-21975.7	0.35	0.79	0.37
5019	1077697	-29243.7	0.01	0.35	0.49
5020	1077697	-26220.6	0.13	0.50	0.44
5021	1077697	-37225.9	(0.21)	0.06	0.63
5022	1077697	-34202.9	(0.14)	0.15	0.58
5023	1077697	-41470.9	(0.29)	(0.05)	0.70
5024	1077697	-38447.9	(0.23)	0.03	0.65
5025	1056000	-24930	0.19	0.58	0.42
5026	1056000	-22110.8	0.34	0.78	0.37
5027	1056000	-29167	0.01	0.35	0.49
5028	1056000	-26347.9	0.12	0.50	0.45
5029	1056000	-37445.9	(0.21)	0.05	0.63
5030	1056000	-34626.7	(0.15)	0.14	0.59
5031	1056000	-41683	(0.29)	(0.05)	0.70
5032	1056000	-38863.8	(0.24)	0.01	0.66
5033	1077697	-22110.1	0.34	0.78	0.37
5034	1077697	-24864.3	0.19	0.59	0.42
5035	1077697	-26355.1	0.12	0.50	0.45
5036	1077697	-29109.3	0.02	0.35	0.49
5037	1077697	-34337.3	(0.14)	0.15	0.58
5038	1077697	-37091.5	(0.20)	0.06	0.63
5039	1097234	-38625.3	(0.23)	0.02	0.65
5040	1077697	-41336.5	(0.28)	(0.05)	0.70
5041	1056000	-24656.5	0.20	0.60	0.42
5042	1056000	-22384.3	0.32	0.76	0.38
5043	1056000	-28893.6	0.02	0.36	0.49
5044	1056000	-26621.4	0.11	0.48	0.45
5045	1056000	-37172.4	(0.20)	0.06	0.63
5046	1056000	-34900.2	(0.15)	0.13	0.59
5047	1056000	-41409.5	(0.29)	(0.05)	0.70
5048	1056000	-39137.3	(0.24)	0.01	0.66
5049	1077697	-31536	(0.06)	0.25	0.53
5050	1077697	-28512.9	0.04	0.38	0.48
5051	1077697	-35780.9	(0.17)	0.10	0.60
5052	1077697	-32757.8	(0.10)	0.20	0.55
5053	1077697	-30688.7	(0.04)	0.28	0.52
5054	1077697	-27665.7	0.07	0.43	0.47
5055	1077697	-34933.7	(0.15)	0.13	0.59
5056	1077697	-31910.7	(0.07)	0.24	0.54
5057	1056000	-30887.8	(0.04)	0.28	0.52
5058	1056000	-28068.6	0.05	0.40	0.47

Load Case	Element ID	Minimum Principal Stress (psi)	Margin with FS=2	Margin with FS=1.5	Stress Ratio
5059	1056000	-35124.9	(0.16)	0.12	0.59
5060	1056000	-32305.7	(0.08)	0.22	0.55
5061	1056000	-31488.2	(0.06)	0.25	0.53
5062	1056000	-28668.9	0.03	0.38	0.48
5063	1056000	-35725.3	(0.17)	0.10	0.60
5064	1056000	-32906	(0.10)	0.20	0.56

For all load cases with negative margins the corresponding cases with consistent load factor cases (from Appendix C16, Table C16-7, p. C16-7) were run. Results were sorted using FEMAP and are shown in Table 4.1.7-6.

Stresses shown in Table 4.1.7-6 shows negative margin only for Min principle stress with the untested factor of safety of 2.0. With the tested factor of safety of 1.5 the margin is positive. A Static test will be performed on the vertex bracket to confirm model accuracy and allow the use of the lowered factor of safety.

Also note the Max stress ratio is above 30% which indicates that fatigue analysis will be required for this part.

Table 4.1.7-6 Table Of Margins For Consistent On-Orbit Load Factor Cases

Stress	Max Min	Set	ID	Value	Margin Untested	Margin Tested	Stress Ratio
Solid X Normal Stress	Minimum	135	1084297	-19754	Not checked	Not checked	
	Maximum	139	1096353	14600	Not checked	Not checked	
Solid XY Shear Stress	Minimum	139	1159796	-12379	0.62	1.16	
	Maximum	135	1056823	12484	0.60	1.14	
Solid Max Prin Stress	Minimum	139	1078809	-5818	4.08	5.78	0.10
	Maximum	139	1103844	27188	0.09	0.45	0.46
Solid Mean Stress	Minimum	135	1181166	-10773	Not checked	Not checked	
	Maximum	139	1049148	13482	Not checked	Not checked	
Solid Von Mises Stress	Minimum	148	1120157	8	5379.03	6112.67	
	Maximum	139	1056000	37635	0.13	0.29	
Solid Y Normal Stress	Minimum	135	1115720	-23983	Not checked	Not checked	
	Maximum	139	1080126	16754	Not checked	Not checked	
Solid YZ Shear Stress	Minimum	139	1153225	-14922	0.34	0.79	
	Maximum	135	1110381	14847	0.35	0.80	
Solid Min Prin Stress	Minimum	139	1056000	-38502	(0.23)	0.02	0.65
	Maximum	135	1000190	6609	3.48	4.97	0.11
Solid Z Normal Stress	Minimum	139	1056000	-37831	Not checked	Not checked	
	Maximum	139	1024496	20164	Not checked	Not checked	
Solid ZX Shear Stress	Minimum	135	1067223	-12089	0.66	1.21	
	Maximum	139	1103844	10190	0.96	1.62	
Solid Int Prin Stress	Minimum	139	1035574	-8223	2.60	3.80	0.14
	Maximum	139	1000365	7835	2.77	4.39	0.13

Stress contours of high stress areas for load case 5031 are shown in Figure 4.1-5 and Figure 4.1-6. Figure 4.1-7 shows both stress and deflection for this load case. Figure 4.1-8 through Figure 4.1-12 show areas with a stress ratio above 30%. The fatigue analysis will be an enveloping case covering all areas shown in these figures.

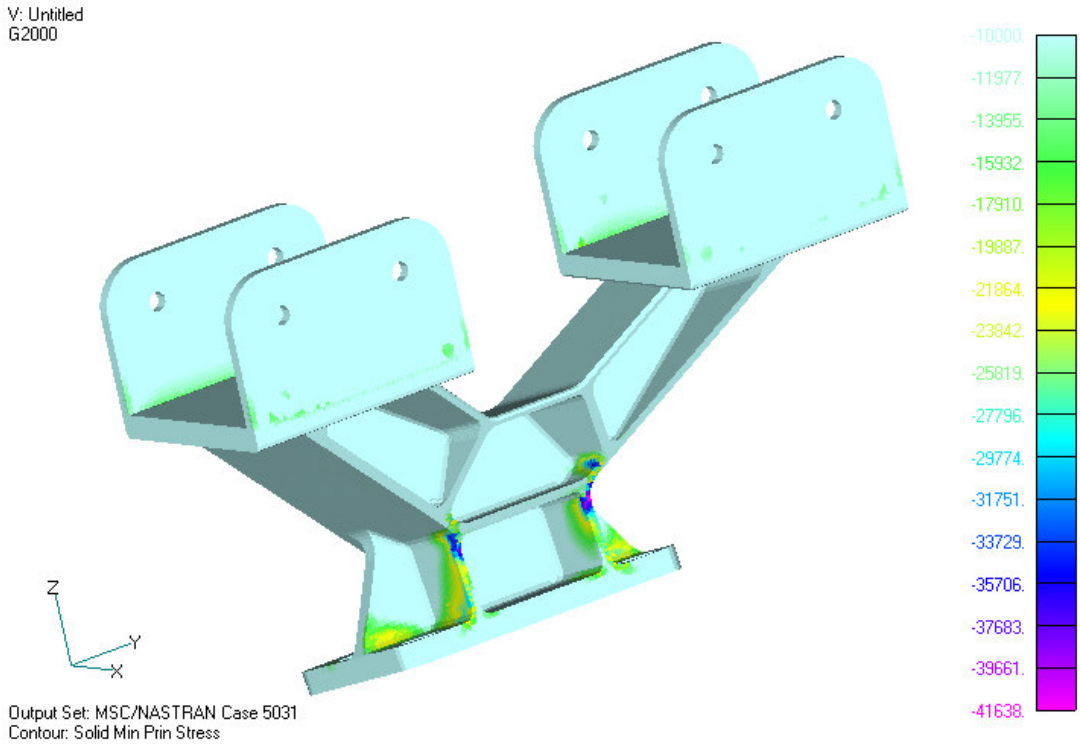

Figure 4.1-5 Stress Contour Vertex Bracket

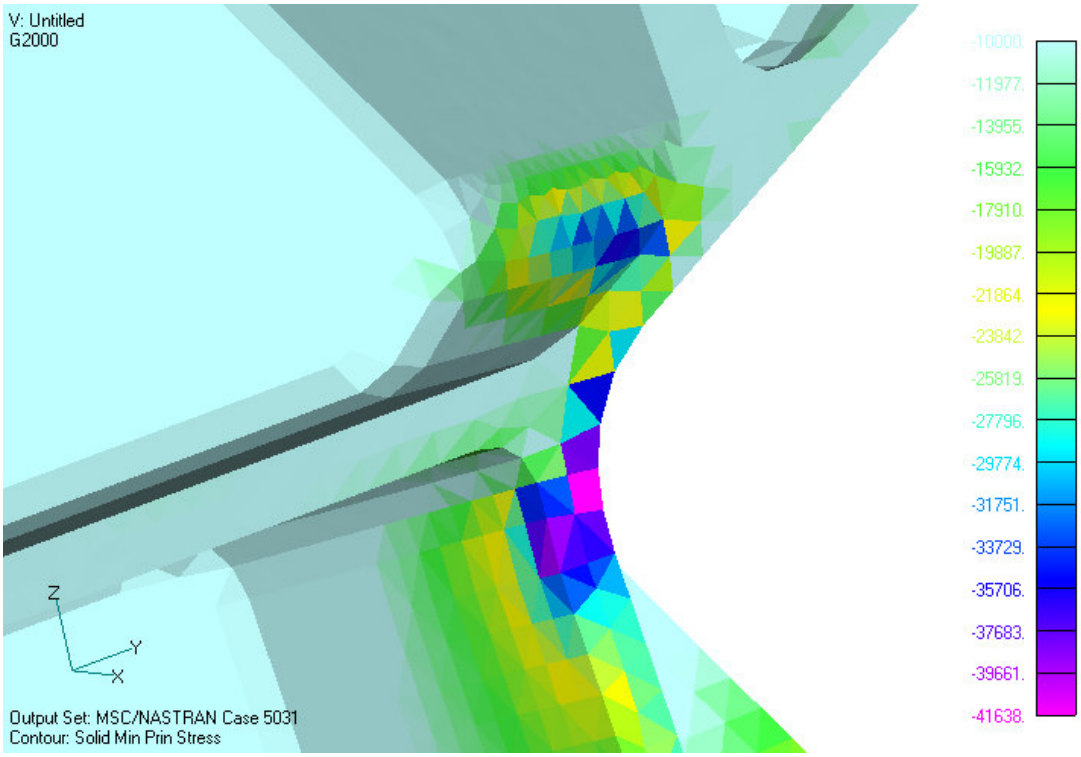

Figure 4.1-6 Stress Contour Vertex Bracket High Stress Area

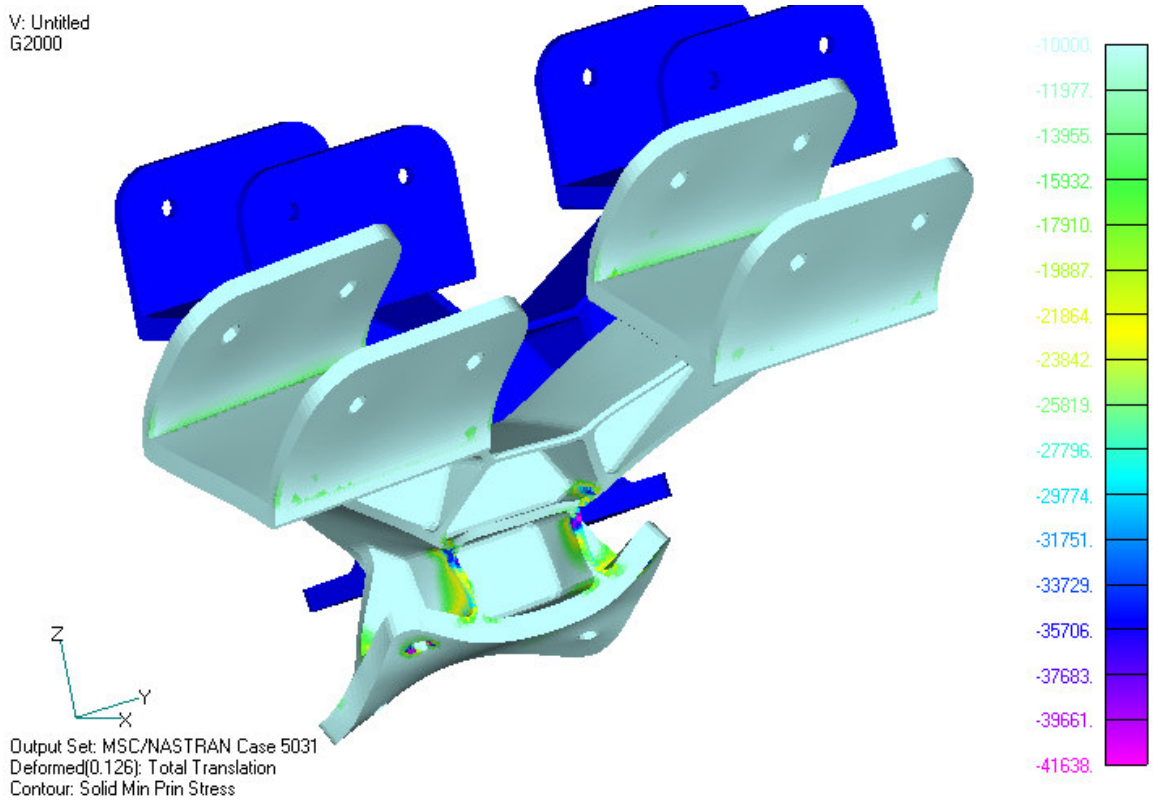

Figure 4.1-7 Stress Contour Vertex Bracket With Deflection

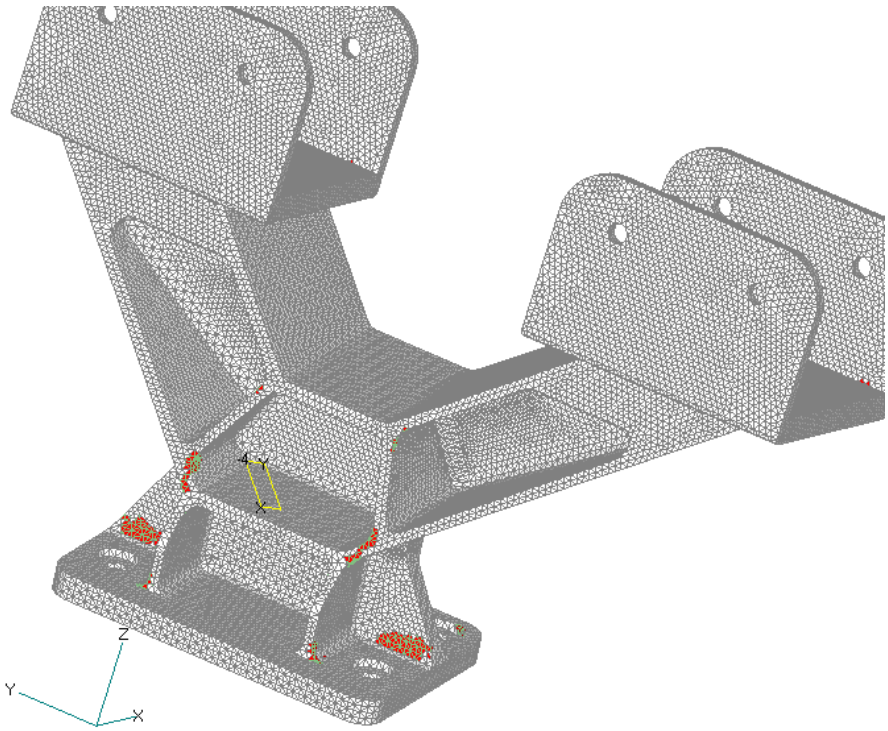

Figure 4.1-8 Red Areas Have Stress Ratio Above 30% For At Least One Load Case

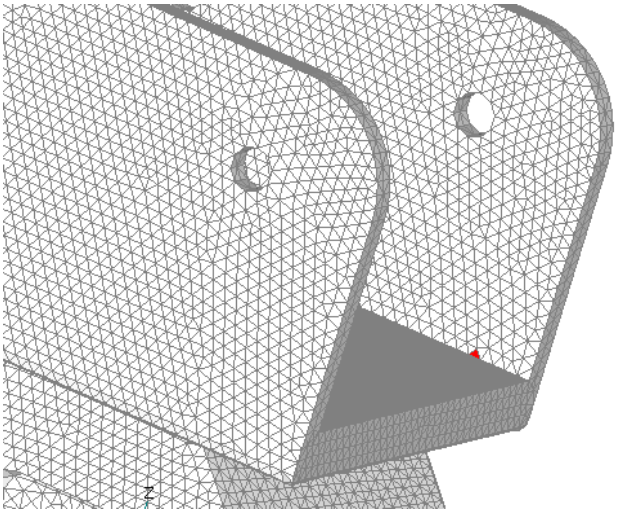

Figure 4.1-9 High Stress Area On "U" Shaped Area

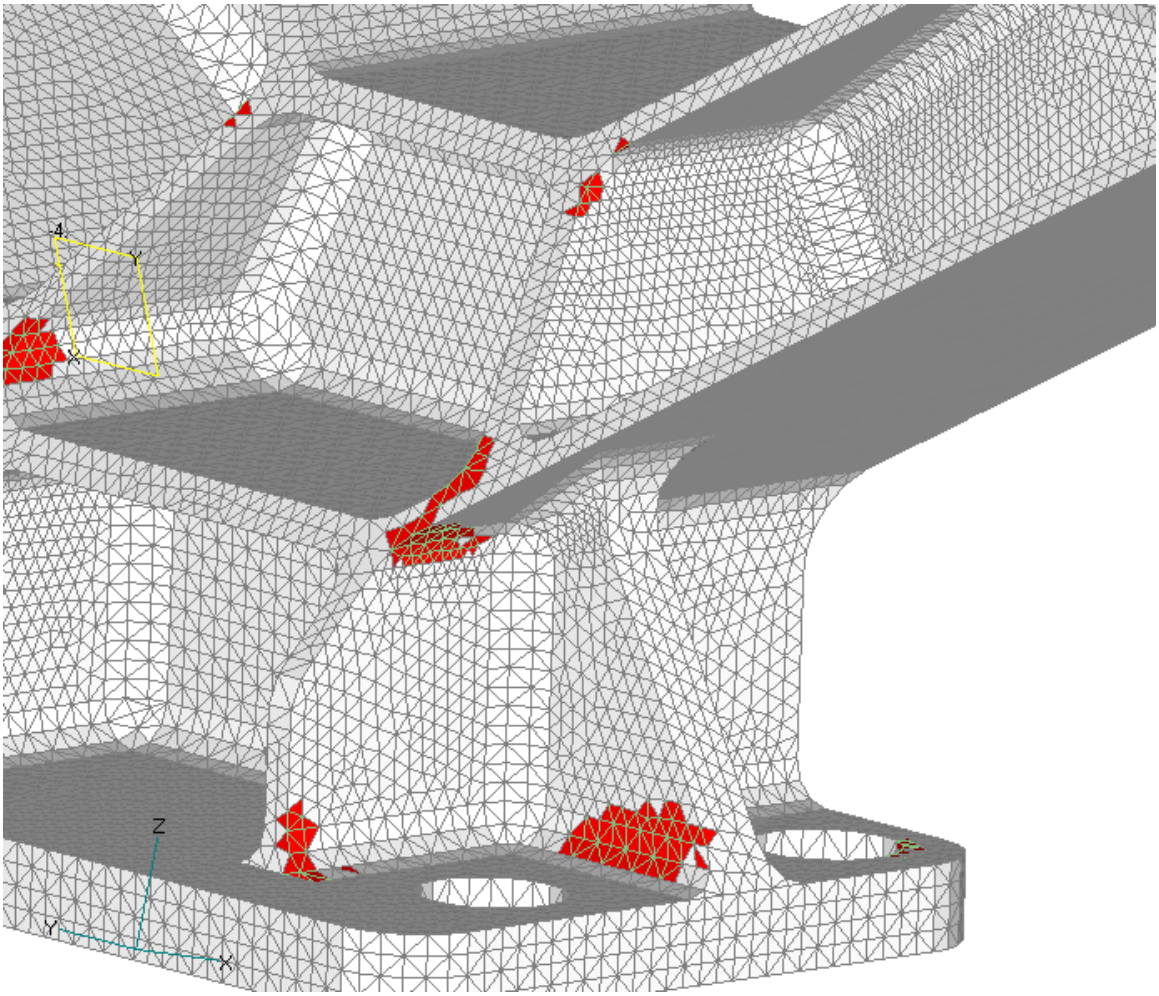

Figure 4.1-10 Several Areas With Stress Ratio Above 30%

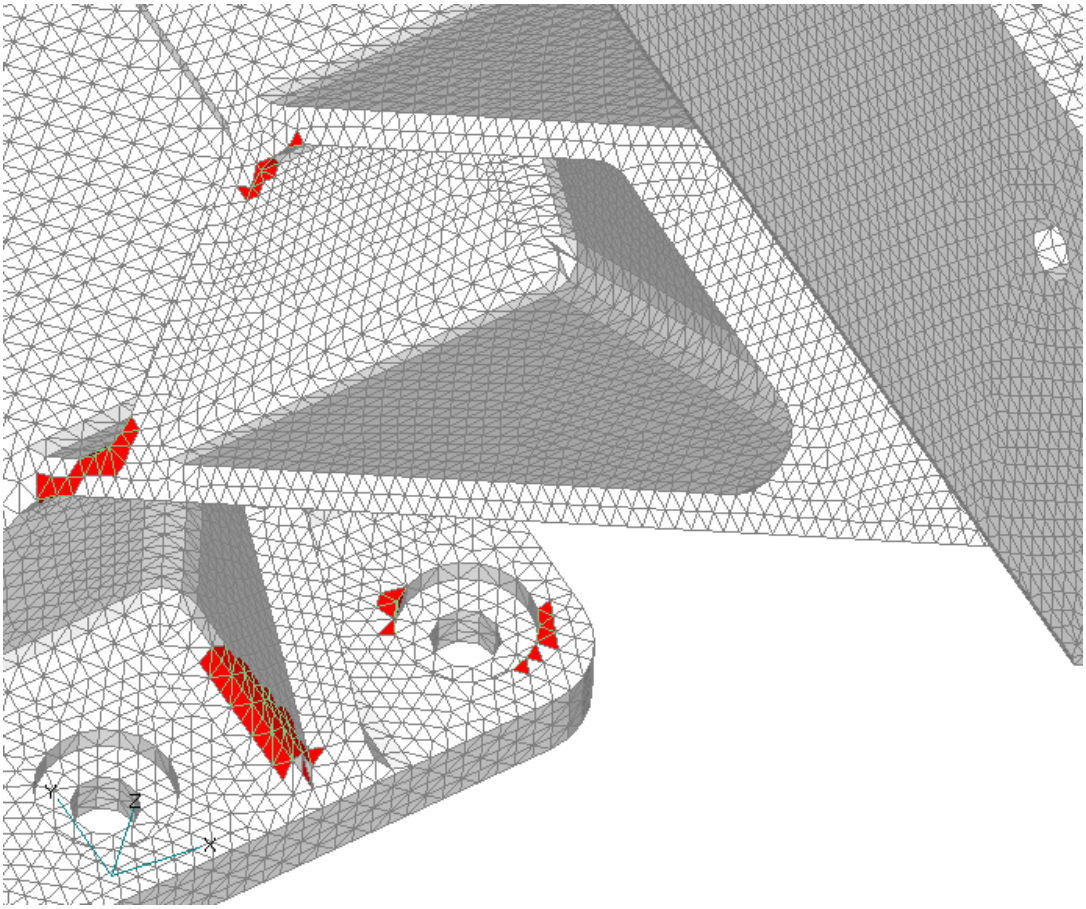

Figure 4.1-11 Second View Of Areas With Stress Ratio Above 30%

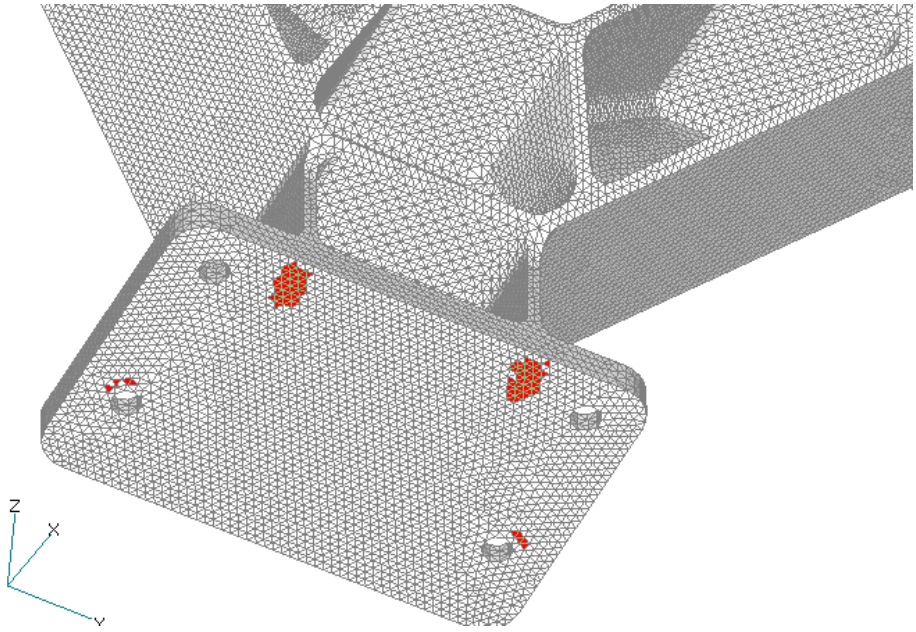

Figure 4.1-12 Areas With Stress Ratios Above 30% On Base Of Vertex Bracket

4.2 Aft Bracket

4.2 AMS-02 PAS Aft Bracket

4.2.1 *Margins of Safety*

Table 4.2-1 Minimum Margin Of Safety Summary

Part/Dwg Number	Part Name Description	Material Heat Treatment	Critical Load Condition	Failure Mode	Margin of Safety	Reference Page
SDG39135814	PAS Aft Bracket	AL ALY 7050-T7451	On-Orbit	Solid Min Prin Stress	0.01 (u)	4.2-13

Note:

1. Factors of Safety are 2.0 for Ultimate and 1.25 for Yield.
2. Boundary condition is at PAS Guide Pins and PAS handle locations.
3. 16 on-orbit load cases are applied.
4. u = ultimate, y = yield
5. See Table 4.2-10, Set 56, ID 702957

4.2.2 *Factors of Safety*

The hardware is designed with a yield factor of 1.25 and an ultimate factor of 2.0 against limit loads for on-orbit.

4.2.3 *Description of Structure*

Figure 4.2-1 below shows the locations of the aft brackets in AMS-02. The brackets were machined out of 7050-T7451 Aluminum Alloy plate. The base of the aft brackets bolt to the PAS platform and the other ends of the aft brackets bolt to the center body on the Lower USS-02.

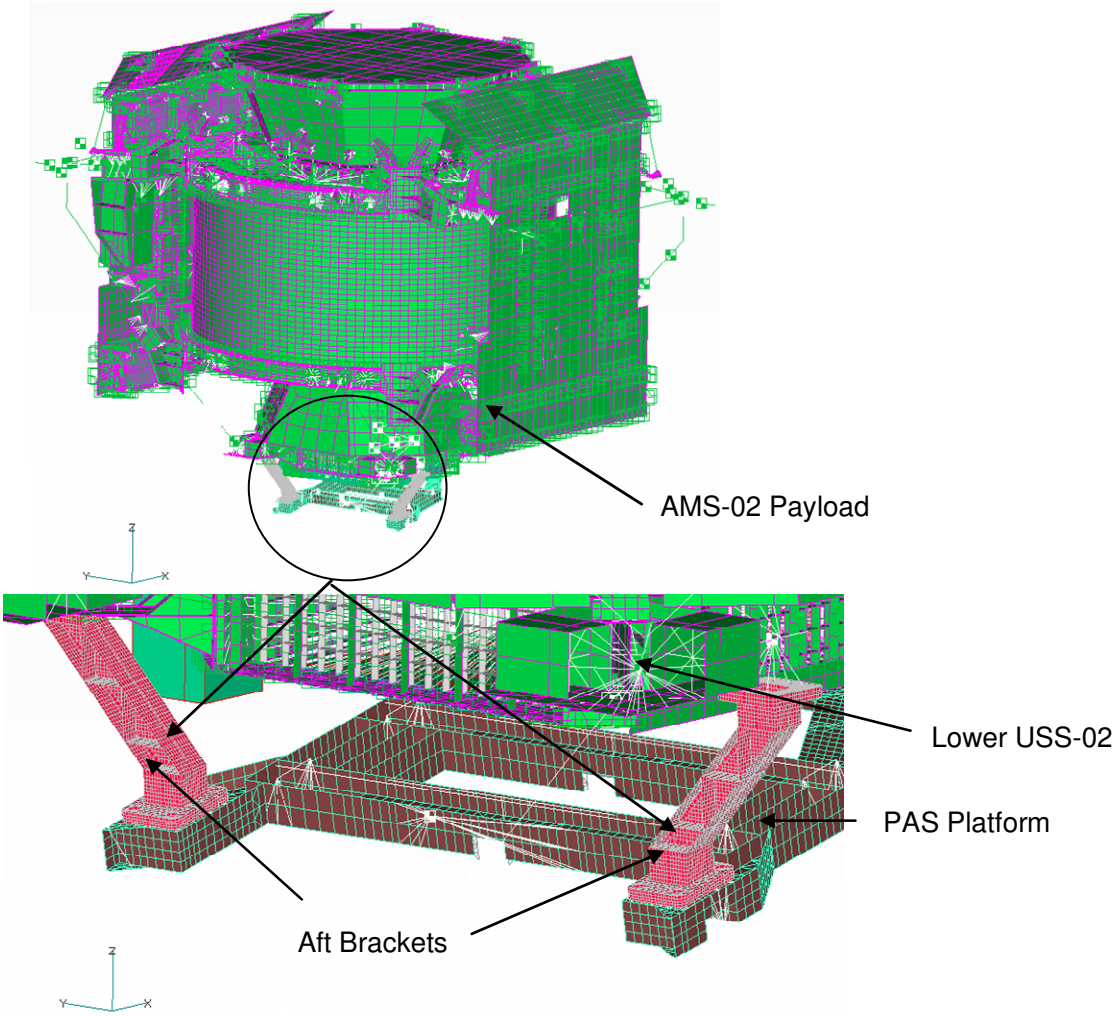

Figure 4.2-1 Location of PAS Aft Brackets in AMS-02

4.2.4 *Description of Model, Model Checks*

The same finite element NASTRAN model was used for this Aft Bracket (s4.2) as was used for the Vertex Bracket (s4.1). For a description of the model, see Section 4.1.4. For model checks, see Section 4.1.5. The aft bracket is shown in Figure 4.2-2.

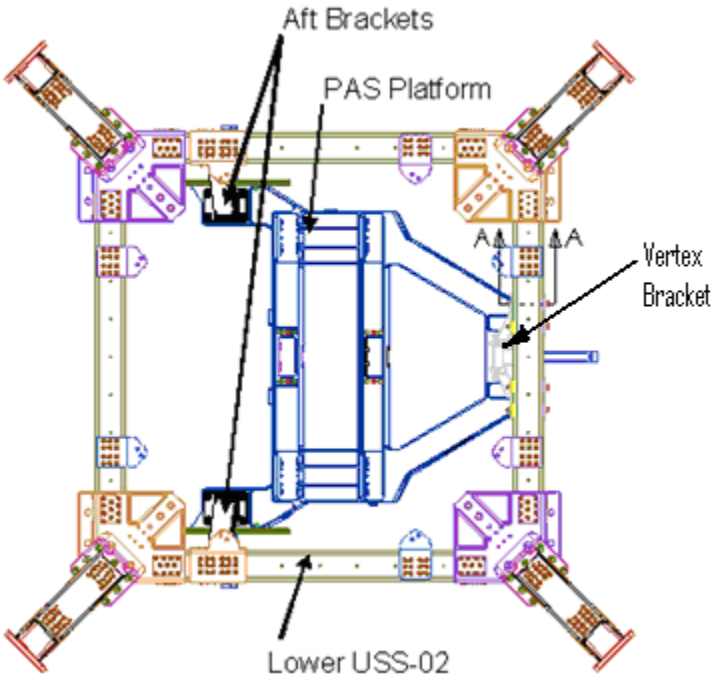

Figure 4.2-2 PAS Aft Brackets In AMS-02

4.2.5 *Material and Temperature*

The Aft brackets are made of 7050-T7451 Aluminum Alloy. These properties are taken from Boeing Material Specification of BMS 7-323C, and MIL-HDBK-5J. Temperature limits at the interface of the PAS platform and aft brackets are provided by the Thermal Analysis Group. For on-orbit conditions, the temperature of 151 F is applied, see Appendix C2

4.2.6 *Stress analysis Aft bracket*

The same methodology as for the analysis of the Vertex bracket was used with the exception of the Factor of safety. Since this part will not be tested, only the margins using the untested factors of safety will be calculated. The method of calculation as well as material allowable is shown in Section 4.1.7, in Table 4.1.7-1 Results are shown in Table 4.2-1 through table 4.2-10.

Table 4.2-2 Landing Solid Element Stress Sort

Stress	Max Min	Set	ID	Stress (psi)	Margin Untested	Stress Ratio
Solid X Normal Stress	Minimum	155	703517	-4220	Not checked	
	Maximum	151	703725	3650	Not checked	
Solid XY Shear Stress	Minimum	140	703517	-1084	17.47	
	Maximum	155	703733	1029	18.46	
Solid Max Prin Stress	Minimum	151	703517	-1383	20.38	0.02
	Maximum	181	603517	5510	4.37	0.09

Stress	Max Min	Set	ID	Stress (psi)	Margin Untested	Stress Ratio
Solid Mean Stress	Minimum	181	603517	-2726	Not checked	
	Maximum	159	703517	3425	Not checked	
Solid Von Mises Stress	Minimum	136	603688	1	69216.17	
	Maximum	159	703517	5304	7.05	
Solid Y Normal Stress	Minimum	151	703517	-1959	Not checked	
	Maximum	189	603517	1617	Not checked	
Solid YZ Shear Stress	Minimum	140	703549	-1269	14.77	
	Maximum	151	703514	1503	12.32	
Solid Min Prin Stress	Minimum	159	703517	-6932	3.27	0.12
	Maximum	159	700047	1326	21.30	0.02
Solid Z Normal Stress	Minimum	151	703517	-4254	Not checked	
	Maximum	181	603517	3380	Not checked	
Solid ZX Shear Stress	Minimum	151	703517	-2633	6.60	
	Maximum	189	603517	2074	8.65	
Solid Int Prin Stress	Minimum	159	700070	-2979	8.93	0.05
	Maximum	140	700081	2561	10.55	0.04

Table 4.2-3 Landing Plate Element Stress Sort

Stress	Max Min	Set	ID	Stress (psi)	Margin Untested	Stress Ratio
Plate Bottom Fiber	Minimum	129	600566	0	Not checked	
	Maximum	129	600566	0	Not checked	
Plate Bot X Normal Stress	Minimum	155	706327	-7180	Not checked	
	Maximum	156	706326	9044	Not checked	
Plate Bot Y Normal Stress	Minimum	155	700576	-2991	Not checked	
	Maximum	140	705020	2088	Not checked	
Plate Bot XY Shear Stress	Minimum	159	600586	-1691	10.84	
	Maximum	156	706326	2730	4.23	
Plate Bot PrnStress Angle	Minimum	138	608093	-90	Not checked	
	Maximum	187	705730	90	Not checked	
Plate Bot MajorPrn Stress	Minimum	155	700576	-2221	12.32	0.04
	Maximum	156	706326	9971	1.97	0.17
Plate Bot MinorPrn Stress	Minimum	155	706327	-7856	2.76	0.13
	Maximum	140	700587	1406	20.04	0.02
Plate Bot VonMises Stress	Minimum	132	607301	1	29142.85	
	Maximum	156	706326	9509	3.49	
Plate Top Fiber	Minimum	129	600566	0	Not checked	
	Maximum	129	600566	0	Not checked	
Plate Top X Normal Stress	Minimum	155	705030	-6375		
	Maximum	140	706326	8350		
Plate Top Y Normal Stress	Minimum	159	705074	-2324		
	Maximum	155	707442	2249		
Plate Top XY Shear Stress	Minimum	148	707376	-1253	14.98	
	Maximum	140	705020	1865	9.74	

Stress	Max Min	Set	ID	Stress (psi)	Margin Untested	Stress Ratio
Plate Top PrnStress Angle	Minimum	164	606643	-90	Not checked	
	Maximum	133	705289	90	Not checked	
Plate Top MajorPrn Stress	Minimum	151	700573	-1961	14.08	0.03
	Maximum	140	706326	8380	2.53	0.14
Plate Top MinorPrn Stress	Minimum	155	705030	-6418	3.61	0.11
	Maximum	140	706305	1812	15.32	0.03
Plate Top VonMises Stress	Minimum	131	606410	1	34729.81	
	Maximum	140	706326	7768	4.49	

Table 4.2-4 Liftoff Solid Element Stress Sort

Stress	Max Min	Set	ID	Stress (psi)	Margin Untested	Stress Ratio
Solid X Normal Stress	Minimum	91	703517	-5434	Not checked	
	Maximum	87	703725	4819	Not checked	
Solid XY Shear Stress	Minimum	95	703601	-1160	16.26	
	Maximum	91	703733	1276	14.68	
Solid Max Prin Stress	Minimum	87	703517	-1858	14.92	0.03
	Maximum	117	603517	5858	4.05	0.10
Solid Mean Stress	Minimum	117	603517	-2908	Not checked	
	Maximum	95	703517	4555	Not checked	
Solid Von Mises Stress	Minimum	106	702780	1	37991.49	
	Maximum	95	703517	6983	5.11	
Solid Y Normal Stress	Minimum	87	703517	-2606	Not checked	
	Maximum	95	700047	2029	Not checked	
Solid YZ Shear Stress	Minimum	76	703549	-1295	14.46	
	Maximum	87	703514	1991	9.05	
Solid Min Prin Stress	Minimum	95	703517	-9187	2.22	0.16
	Maximum	95	700047	1661	16.81	0.03
Solid Z Normal Stress	Minimum	87	703517	-5687	Not checked	
	Maximum	95	700047	3856	Not checked	
Solid ZX Shear Stress	Minimum	87	703517	-3513	4.70	
	Maximum	125	603517	2259	7.86	
Solid Int Prin Stress	Minimum	95	700070	-3933	6.52	0.07
	Maximum	95	700047	3030	8.76	0.05

Table 4.2-5 Liftoff Plate Element Stress Sort

Stress	Max Min	Set	ID	Stress (psi)	Margin Untested	Stress Ratio
Plate Bottom Fiber	Minimum	65	706305	0	Not checked	
	Maximum	65	706305	0	Not checked	
Plate Bot X Normal Stress	Minimum	91	706327	-7819	Not checked	
	Maximum	92	706326	8330	Not checked	
Plate Bot Y Normal Stress	Minimum	91	700576	-3790	Not checked	
	Maximum	95	700552	2000	Not checked	

Stress	Max Min	Set	ID	Stress (psi)	Margin Untested	Stress Ratio
Plate Bot XY Shear Stress	Minimum	95	600586	-1502	12.33	
	Maximum	92	706326	2679	6.47	
Plate Bot PrnStress Angle	Minimum	108	706542	-90	Not checked	
	Maximum	118	607826	90	Not checked	
Plate Bot MajorPrn Stress	Minimum	91	700576	-2710	9.91	0.05
	Maximum	92	706326	9293	2.18	0.16
Plate Bot MinorPrn Stress	Minimum	91	706327	-8614	2.43	0.15
	Maximum	95	700551	1527	18.37	0.03
Plate Bot VonMises Stress	Minimum	111	606962	1	41035.49	
	Maximum	92	706326	8888	3.80	
Plate Top Fiber	Minimum	65	706305	0	Not checked	
	Maximum	65	706305	0	Not checked	
Plate Top X Normal Stress	Minimum	91	705030	-7837	Not checked	
	Maximum	76	706326	7552	Not checked	
Plate Top Y Normal Stress	Minimum	95	705074	-3041	Not checked	
	Maximum	91	707442	2543	Not checked	
Plate Top XY Shear Stress	Minimum	84	707376	-1550	11.91	
	Maximum	95	700576	1699	10.78	
Plate Top PrnStress Angle	Minimum	78	605389	-90	Not checked	
	Maximum	108	600536	90	Not checked	
Plate Top MajorPrn Stress	Minimum	87	700573	-2623	10.28	0.04
	Maximum	76	706326	7560	2.91	0.13
Plate Top MinorPrn Stress	Minimum	91	705030	-7894	2.75	0.13
	Maximum	95	700597	1748	15.92	0.03
Plate Top VonMises Stress	Minimum	83	607758	2	26200.25	
	Maximum	91	705030	7495	4.69	

Table 4.2-6 On-Orbit Solid Element Stress Sort

Stress	Max Min	Set	ID	Stress (psi)	Margin Untested	Stress Ratio
Solid X Normal Stress	Minimum	56	702957	-16847	Not checked	
	Maximum	3	602662	13855	Not checked	
Solid XY Shear Stress	Minimum	56	702663	-5850	2.42	
	Maximum	60	602663	5870	2.41	
Solid Max Prin Stress	Minimum	60	600001	-6702	3.41	0.11
	Maximum	3	602854	32135	*(0.08)	*0.54
Solid Mean Stress	Minimum	3	602854	-15687	Not checked	
	Maximum	56	702957	14551	Not checked	
Solid Von Mises Stress	Minimum	45	703693	12	3562.59	
	Maximum	3	602854	24895	0.71	
Solid Y Normal Stress	Minimum	56	702957	-8389	Not checked	
	Maximum	11	602854	9451	Not checked	
Solid YZ Shear Stress	Minimum	3	602853	-9969	1.01	
	Maximum	8	702853	9964	1.01	

Stress	Max Min	Set	ID	Stress (psi)	Margin Untested	Stress Ratio
Solid Min Prin Stress	Minimum	56	702957	-29332	0.01	*0.50
	Maximum	60	600024	6411	3.61	0.11
Solid Z Normal Stress	Minimum	56	702957	-18418	Not checked	
	Maximum	3	602854	25787	Not checked	
Solid ZX Shear Stress	Minimum	56	702957	-11461	0.75	
	Maximum	16	703552	4710	3.25	
Solid Int Prin Stress	Minimum	60	600001	-14489	1.04	0.24
	Maximum	60	600024	12113	1.44	0.20

Table 4.2-7 On-Orbit Plate Element Stress Sort

Stress	Max Min	Set	ID	Stress (psi)	Margin Untested	Stress Ratio
Plate Bottom Fiber	Minimum	1	706665	0	Not checked	
	Maximum	1	706665	0	Not checked	
Plate Bot X Normal Stress	Minimum	61	706879	-23773	Not checked	
	Maximum	63	706878	35622	Not checked	
Plate Bot Y Normal Stress	Minimum	60	600501	-11490	Not checked	
	Maximum	11	600526	8332	Not checked	
Plate Bot XY Shear Stress	Minimum	56	700502	-7922	1.53	
	Maximum	60	600502	8276	1.42	
Plate Bot PrnStress Angle	Minimum	26	607937	-90	Not checked	
	Maximum	31	708009	90	Not checked	
Plate Bot MajorPrn Stress	Minimum	60	600501	-6371	3.64	0.11
	Maximum	63	706878	36636	*(0.19)	*0.62
Plate Bot MinorPrn Stress	Minimum	61	706879	-24201	0.22	*0.41
	Maximum	3	600526	6361	3.65	0.11
Plate Bot VonMises Stress	Minimum	28	707162	11	3957.34	
	Maximum	63	706878	34124	0.25	
Plate Top Fiber	Minimum	1	706665	0	Not checked	
	Maximum	1	706665	0	Not checked	
Plate Top X Normal Stress	Minimum	56	707431	-27693		
	Maximum	63	706782	17732		
Plate Top Y Normal Stress	Minimum	3	605135	-10452		
	Maximum	11	600523	7721		
Plate Top XY Shear Stress	Minimum	51	607411	-6127	2.27	
	Maximum	60	600501	6401	2.13	
Plate Top PrnStress Angle	Minimum	61	608081	-90	Not checked	
	Maximum	5	608057	90	Not checked	
Plate Top MajorPrn Stress	Minimum	11	600548	-8045	2.68	0.14
	Maximum	63	706782	17846	0.66	*0.30
Plate Top MinorPrn Stress	Minimum	56	707431	-28016	0.06	*0.47
	Maximum	3	600523	7672	2.85	0.13
Plate Top VonMises Stress	Minimum	46	607226	8	5104.43	
	Maximum	56	707431	26470	0.61	

Note there are negative margins for On-Orbit load cases for both Solid and Plate elements. Figure 4.2-3 shows the locations of the two elements on one bracket, the other bracket is a mirror image.

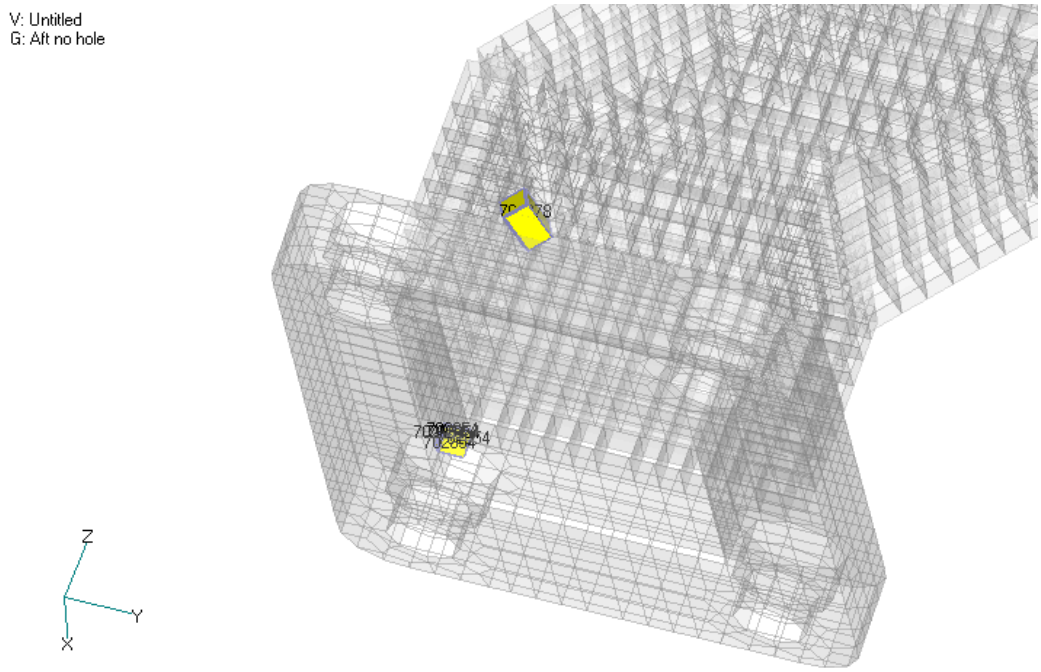

Figure 4.2-3 Areas With Negative Margins On Aft-Bracket.

Table 4.2-8 lists the elements with negative margins, the adjusted stress, the rationale for the correction and the new margins. For the Plate elements the thickness is modeled as 0.375". The element is fully in the curved area as shown in Figure 4.2-4. The thickness at this location is actually bigger. Since the area represented by the element is at least 25% thicker, the stresses in the elements are scaled to account for the difference between the model and the drawing.

Table 4.2-8 Table Of Elements With Negative Margins And New Stress Values Used In Analysis

Element Type	Element ID	Stress	Margin	Adjusted Stress	New Margin	Note
Solid	602854	32135	(0.08)	-29332	0.01	Note 2
Solid	702854	31913	(0.07)	-29332	0.01	Note 2
Plate	606878	36552	(0.19)	29241.384	0.01	Note 1
Plate	706878	36636	(0.19)	29308.744	0.01	Note 1
Note:						
1.) Stress Lowered by 25% to account for difference between modeled thickness and actual thickness						
2.) Stress of next lowest element at same location used for analysis						

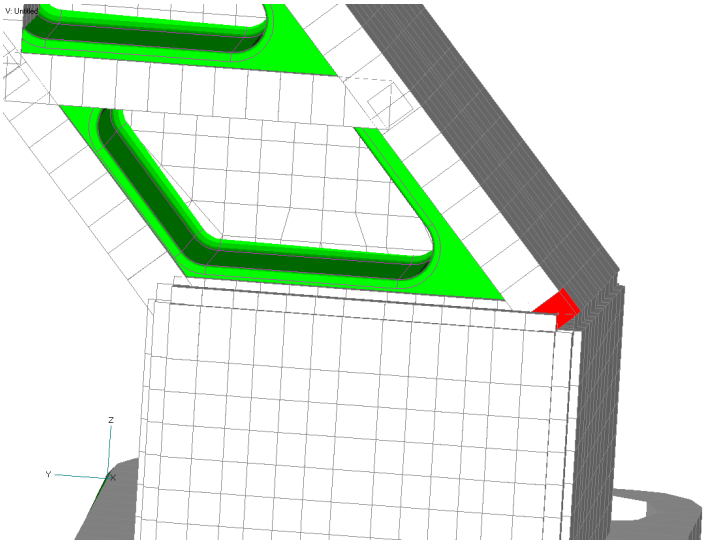

Figure 4.2-4 Location Of High Stress Plate Element In Red Green Is Actual Part Thickness.

Table 4.2-9 Plate Element Sort Excluding The Two Elements With Negative Margins

Stress	Max Min	Set	ID	Stress (psi)	Margin Untested	Stress Ratio
Plate Bottom Fiber	Minimum	1	600501	0	Not checked	
	Maximum	1	600501	0	Not checked	
Plate Bot X Normal Stress	Minimum	61	706879	-23773	Not checked	
	Maximum	63	706866	26595	Not checked	
Plate Bot Y Normal Stress	Minimum	60	600501	-11490	Not checked	
	Maximum	11	600526	8332	Not checked	
Plate Bot XY Shear Stress	Minimum	56	700502	-7922	1.53	
	Maximum	60	600502	8276	1.42	
Plate Bot PrnStress Angle	Minimum	26	607937	-90	Not checked	
	Maximum	31	708009	90	Not checked	
Plate Bot MajorPrn Stress	Minimum	60	600501	-6371	3.64	0.11
	Maximum	63	706866	26610	0.11	*0.45
Plate Bot MinorPrn Stress	Minimum	61	706879	-24201	0.22	*0.41
	Maximum	3	600526	6361	3.65	0.11
Plate Bot VonMises Stress	Minimum	28	707162	11	3957.34	
	Maximum	63	706866	26406	0.62	
Plate Top Fiber	Minimum	1	600501	0	Not checked	
	Maximum	1	600501	0	Not checked	
Plate Top X Normal Stress	Minimum	56	707431	-27693		
	Maximum	63	706782	17732		
Plate Top Y Normal Stress	Minimum	3	605135	-10452		
	Maximum	11	600523	7721		
Plate Top XY Shear Stress	Minimum	51	607411	-6127	2.27	
	Maximum	60	600501	6401	2.13	

Stress	Max Min	Set	ID	Stress (psi)	Margin Untested	Stress Ratio
Plate Top PrnStress Angle	Minimum	61	608081	-90	Not checked	
	Maximum	5	608057	90	Not checked	
Plate Top MajorPrn Stress	Minimum	11	600548	-8045	2.68	0.14
	Maximum	63	706782	17846	0.66	*0.30
Plate Top MinorPrn Stress	Minimum	56	707431	-28016	0.06	*0.47
	Maximum	3	600523	7672	2.85	0.13
Plate Top VonMises Stress	Minimum	46	607226	8	5104.43	
	Maximum	56	707431	26470	0.61	

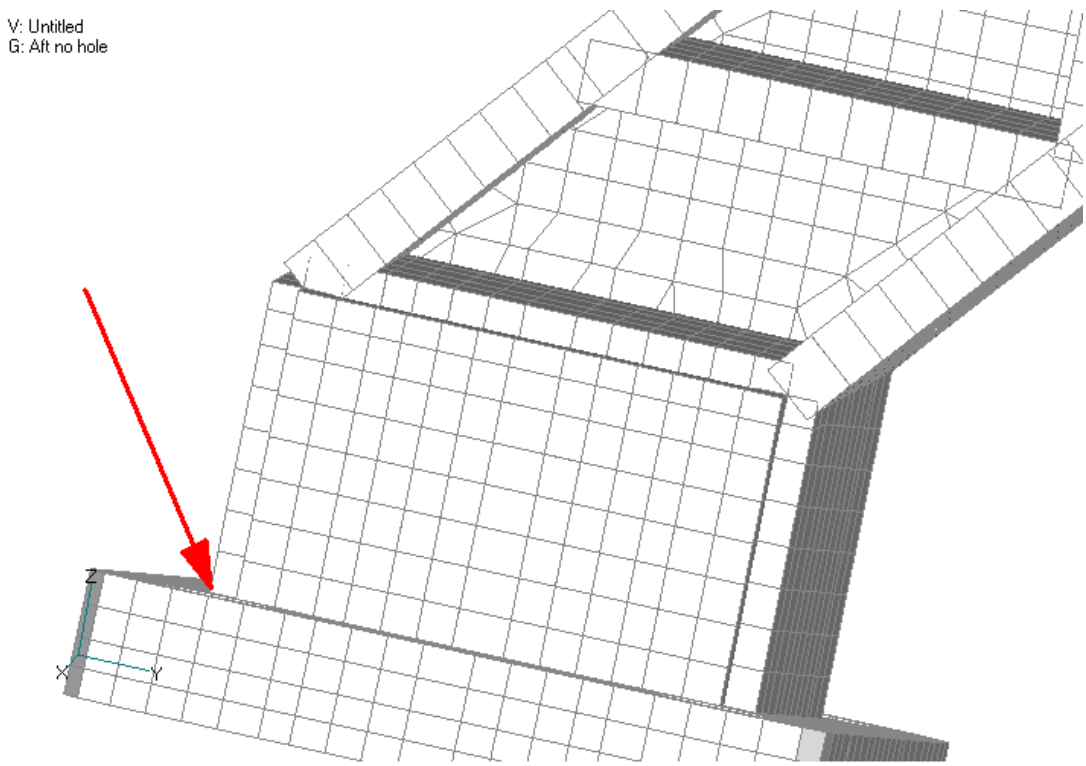

Figure 4.2-5 Location Of Solid Element With Negative Margin.

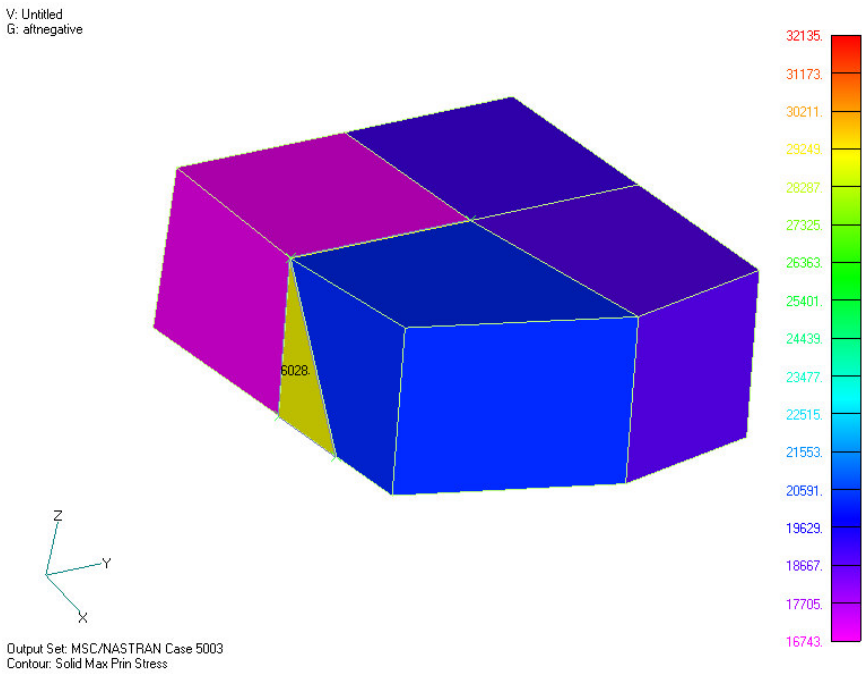

Figure 4.2-6 Plot Showing Malformed Element.

For the two solid elements listed in Figure 4.2-6 the high stress is in a malformed element. Further this element is at the corner connection between solid and plate elements. If you exclude these two misshaped elements the stress is shown in Table 4.2-10. This next highest stress is at the same location in another malformed element. Averaging the elements surrounding the solid element with negative margins a stress lower than the closest elements is obtained. The stress of the closest element was used as the more conservative solution.

Table 4.2-10 On-Orbit Solid Element Stress Sort, Excluding Misshaped Elements Connected With RESSCON Cards.

Stress	Max Min	Set	ID	Stress (psi)	Margin Untested	Stress Ratio
Solid X Normal Stress	Minimum	56	702957	-16847	Not checked	
	Maximum	3	602662	13855	Not checked	
Solid XY Shear Stress	Minimum	56	702663	-5850	2.42	
	Maximum	60	602663	5870	2.41	
Solid Max Prin Stress	Minimum	60	600001	-6702	3.41	0.11
	Maximum	11	602853	26665	0.11	*0.45
Solid Mean Stress	Minimum	11	600024	-11705	Not checked	
	Maximum	56	702957	14551	Not checked	
Solid Von Mises Stress	Minimum	45	703693	12	3562.59	
	Maximum	11	602853	23611	0.81	
Solid Y Normal Stress	Minimum	60	601042	-10036	Not checked	
	Maximum	60	601038	11107	Not checked	
Solid YZ Shear Stress	Minimum	3	602853	-9969	1.01	
	Maximum	8	702853	9964	1.01	

Stress	Max Min	Set	ID	Stress (psi)	Margin Untested	Stress Ratio
Solid Min Prin Stress	Minimum	56	702957	-29332	0.01	*0.50
	Maximum	60	600024	6411	3.61	0.11
Solid Z Normal Stress	Minimum	56	702957	-18418	Not checked	
	Maximum	3	602855	16842	Not checked	
Solid ZX Shear Stress	Minimum	56	702957	-11461	0.75	
	Maximum	56	701039	6187	2.24	
Solid Int Prin Stress	Minimum	60	600001	-14489	1.04	0.24
	Maximum	60	600024	12113	1.44	0.20

For the fracture analysis the areas with a stress ratio greater than 30% need to be considered. Figure 4.2-7and Figure 4.2-8 show these locations.

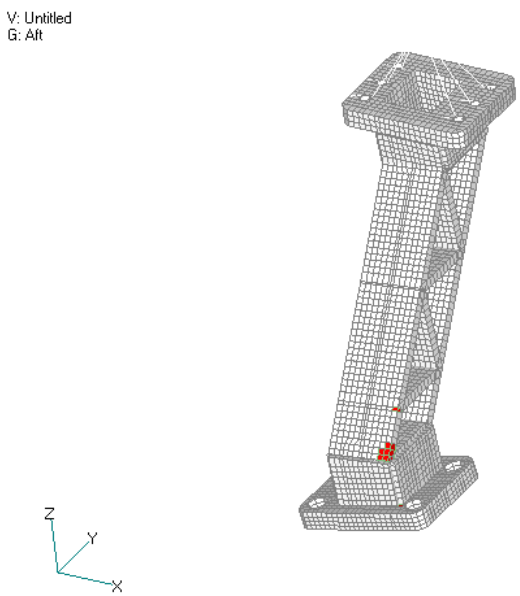

Figure 4.2-7 Aft Bracket Areas With Stress Ratio Greater Than 30%

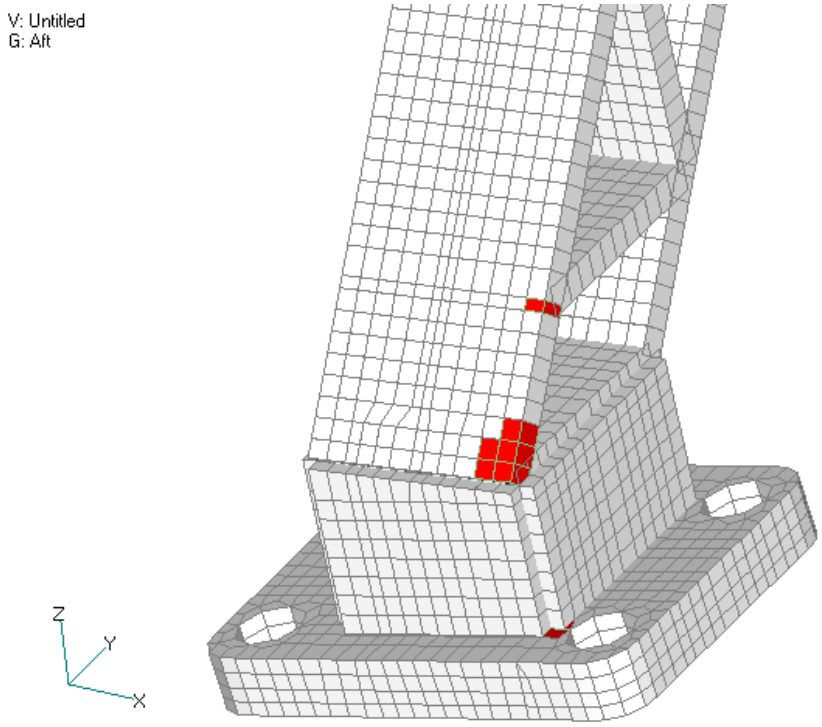

Figure 4.2-8 Aft Bracket Areas With Stress Ratio Greater Than 30%

4.3 PAS Platform Assembly

4.3 AMS-02 PAS Platform Assembly

4.3.1 *Margins of Safety*

Table 4.3-1 Minimum Margin Of Safety Summary

Part/Dwg Number	Part Name/ Description	Material Heat Treatment	Critical Load Condition	Failure Mode	Margin of Safety	Reference Page
SDG39135817	PAS Platform Assembly	AL ALY 7050-T7451	Consistent On-Orbit Load Factor	Tensile Ultimate	0.27	4.3-7

Notes:

1. Factors of Safety are 2.0 for Ultimate and 1.25 for Yield.
2. 64 Liftoff, 64 On-Orbit, and 64 Landing load cases were analyzed.

4.3.2 *Factors of Safety*

The untested hardware is designed with a yield factor of safety 1.25 and an ultimate factor of safety 2.0 against limit loads.

Ref. AMS-02 :"Structural Verification Plan" JSC 28792 REV. E

4.3.3 *Description of Structure*

Figure 4.3-1 shows the PAS Platform Assy, PAS Base Assembly drawing.

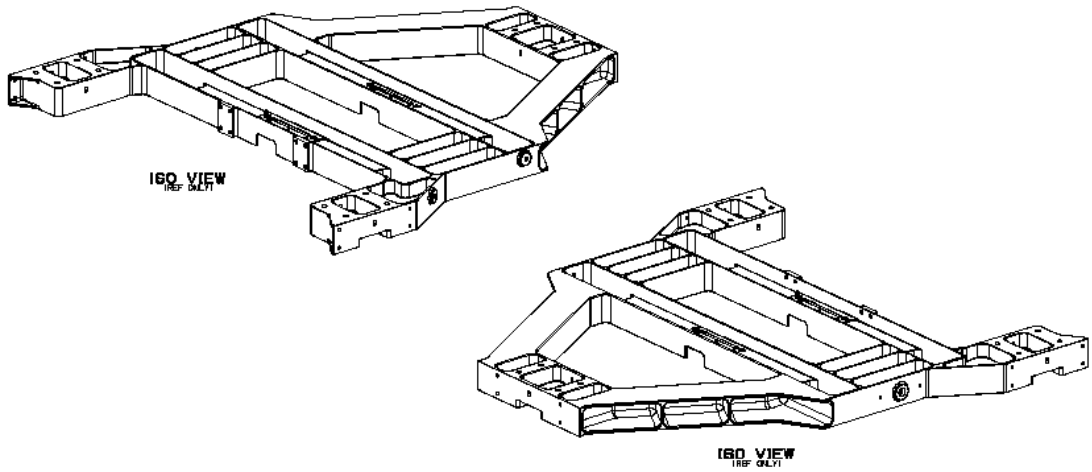

Figure 4.3-1 PAS Platform Assy, PAS Base Assembly, SDG39135817

4.3.4 *Materials and Temperature*

The PAS Platform is made of 7050-T7451 Aluminum Alloy. The material properties are taken from Boeing Material Specification of BMS 7-323C, and MIL-HDBK-5J. Temperature limits are provided by the Thermal Analysis Group. For on-orbit conditions, the temperature of 151 F is applied, see Appendix C2.

4.3.5 *Summary of Analysis*

Stresses were recovered from the NASTRAN run for the platform base. Figure 4.3-2 shows the areas of highest stress concentration.

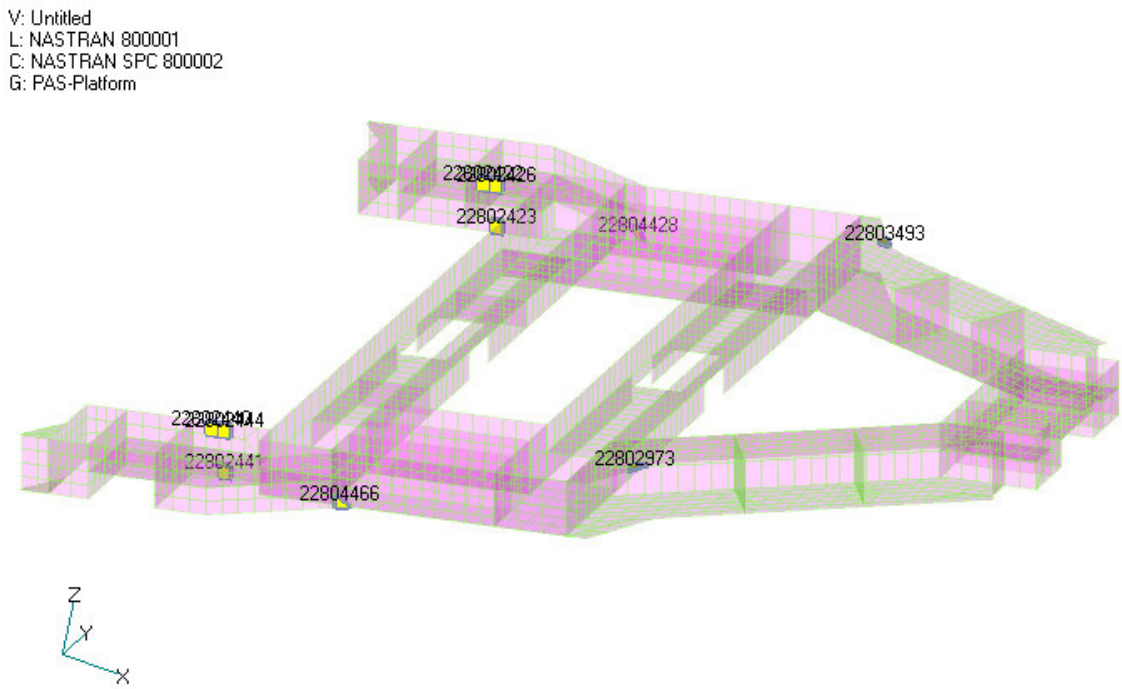

Figure 4.3-2 High Stress Areas of PAS

Table 4.3-2 shows the elements and load cases with the maximum absolute value of Principal, Von Mises, and Shear stresses. For comparison, the CTRIA3 with the highest stresses is shown along with the CQUAD4 with the highest stresses. The highlighted row represents the highest stresses.

Table 4.3-2 PAS Platform Stresses For Liftoff, On-Orbit, and Landing

	Element Type	Element Number	Load Case	Principal Stress	Von Mises Stress	Shear Stress
Liftoff	CTRIA	22800791	1031	12,742	11,099	6,371
	CQUAD	22802423	1027	6,395	6,404	3,206
On-Orbit	CTRIA	22804428	5035	26,339	25,905	13,170
	CQUAD	22802423	5050	25,385	25,401	12,708
Landing	CTRIA	22800793	2031	10,706	9,322	5,353
	CQUAD	22802426	2031	6,471	6,369	3,236

Table 4.3-3, Table 4.3-4, and Table 4.3-5, show a summary of the lowest margins of safety for Tensile Ultimate, Tensile Yield, and Shear Ultimate for the Liftoff, On-Orbit, and Landing load cases respectively.

Table 4.3-3 PAS Platform Liftoff Minimum Margins

Allowable Stress (psi)	Thermal Reduction Coefficient	Factor of Safety	Element Stress (psi)	Margin of Safety	Stress Type
73,000	0.92	2.00	12,742	1.64	Tensile Ultimate
63,000	0.97	1.25	11,099	3.40	Tensile Yield
43,000	0.92	2.00	6,371	2.10	Shear Ultimate

Table 4.3-4 PAS Platform On-Orbit Minimum Margins

Allowable Stress (psi)	Thermal Reduction Coefficient	Factor of Safety	Element Stress (psi)	Margin of Safety	Stress Type
73,000	0.92	2.00	26,339	0.27	Tensile Ultimate
63,000	0.97	1.25	25,905	0.89	Tensile Yield
43,000	0.92	2.00	13,170	0.50	Shear Ultimate

Table 4.3-5: PAS Platform Landing Minimum Margins

Allowable Stress (psi)	Thermal Reduction Coefficient	Factor of Safety	Element Stress (psi)	Margin of Safety	Stress Type
73,000	0.92	2.00	10,706	2.14	Tensile Ultimate
63,000	0.97	1.25	9,322	4.24	Tensile Yield
43,000	0.92	2.00	5,353	2.70	Shear Ultimate

4.3.6 Analysis

CHECK of Assembly Drawing, #SEG39135816

PAS Platform Assy PAS Base Assy, #SDG39135817-001

Allowables

Material Properties

AL ALY, 7050-T7451, BMS-7-323-C, Plate, 2.001-3.000, A

$F_{tu} := \mathbf{73000} \cdot psi$ *(Ref. MMPDS-03, Table 3.7.4.0(b1))*

$F_{ty} := \mathbf{63000} \cdot psi$

$F_{su} := \mathbf{43000} \cdot psi$

Factors of Safety

$FS_u := \mathbf{2.0}$ $FS_y := \mathbf{1.25}$

Temperature Reduction Factors

+ At 151ºF: (These temperature reduction factors are conservative for liftoff/landing conditions)

Gamma Ultimate: $\beta_u := \mathbf{0.92}$ *(Ref. MMPDS-03, Figure 3.7.4.2.1(a))*

Gamma Yield: $\beta_y := \mathbf{0.97}$ *(Ref. MMPDS-03, Figure 3.7.4.2.1(b))*

Allowable Stresses

$F_{tug} := F_{tu} \cdot \beta_u$ $F_{tug} = \mathbf{67160} \cdot psi$

$F_{tyg} := F_{ty} \cdot \beta_y$ $F_{tyg} = \mathbf{61110} \cdot psi$

$F_{sug} := F_{su} \cdot \beta_u$ $F_{sug} = \mathbf{39560} \cdot psi$

Omitted Elements

No element were excluded.

PAS Platform Assy PAS Base Assy, #SDG39135817-001

Liftoff Loads

For the following analysis, the maximum Principal, Von-Mises, and Shear stresses of plate elements are selected from 64 Liftoff load cases (Load Case 1001 - 1064).
NASPOST V.2.2 is used to sort the maximum stresses across all load cases.

NASTRAN Punch Filename: Platform-Tran (Liftoff).lis

Maximum Stresses

$u_{tu} := \mathbf{12742} \cdot psi$ LC# 1031, ELEM# 22800791 *(Maximum Principal Stress)*

$u_{ty} := \mathbf{11099} \cdot psi$ LC# 1031, ELEM# 22800791 *(Maximum Von-Mises Stress)*

$u_{su} := \mathbf{6371} \cdot psi$ LC# 1031, ELEM# 22800791 *(Maximum Shear Stress)*

Margins of Safety

$MS_{tug} := \frac{F_{tug}}{FS_u \cdot u_{tu}} - \mathbf{1}$ $MS_{tug} = \mathbf{1.64}$ ***... Margin of Safety Tensile Ultimate***

$MS_{tyg} := \frac{F_{tyg}}{FS_y \cdot u_{ty}} - \mathbf{1}$ $MS_{tyg} = \mathbf{3.40}$ ***... Margin of Safety Tensile Yield***

$MS_{sug} := \frac{F_{sug}}{FS_u \cdot u_{su}} - \mathbf{1}$ $MS_{sug} = \mathbf{2.10}$ ***... Margin of Safety Shear Ultimate***

PAS Platform Assy PAS Base Assy, #SDG39135817-001

On-Orbit Loads

For the following analysis, the maximum Principal, Von-Mises, and Shear stresses of plate elements are selected from 64 On-Orbit load cases (Load Case 5001 - 5064).
NASPOST V.2.2 is used to sort the maximum stresses across all load cases.

NASTRAN Punch Filename: Platform-15 (On-Orbit).lis

Maximum Stresses

$u_{tu} := \mathbf{26339} \cdot psi$ LC# 5035, ELEM# 22804428 *(Maximum Principal Stress)*

$u_{ty} := \mathbf{25905} \cdot psi$ LC# 5035, ELEM# 22804428 *(Maximum Von-Mises Stress)*

$u_{su} := \mathbf{13170} \cdot psi$ LC# 5035, ELEM# 22804428 *(Maximum Shear Stress)*

Margins of Safety

$MS_{tug} := \frac{F_{tug}}{FS_u \cdot u_{tu}} - \mathbf{1}$ $MS_{tug} = \mathbf{0.27}$ ***... Margin of Safety Tensile Ultimate***

$MS_{tyg} := \frac{F_{tyg}}{FS_y \cdot u_{ty}} - \mathbf{1}$ $MS_{tyg} = \mathbf{0.89}$ ***... Margin of Safety Tensile Yield***

$MS_{sug} := \frac{F_{sug}}{FS_u \cdot u_{su}} - \mathbf{1}$ $MS_{sug} = \mathbf{0.50}$ ***... Margin of Safety Shear Ultimate***

PAS Platform Assy PAS Base Assy, #SDG39135817-001

Landing Loads

For the following analysis, the maximum Principal, Von-Mises, and Shear stresses of plate elements are selected from 64 Landing load cases (Load Case 2001 - 2064).
NASPOST V.2.2 is used to sort the maximum stresses across all load cases.

NASTRAN Punch Filename: Platform-Landing.lis

Maximum Stresses

$u_{tu} := \mathbf{10706} \cdot psi$ LC# 2031, ELEM# 22800793 *(Maximum Principal Stress)*

$u_{ty} := \mathbf{9322} \cdot psi$ LC# 2031, ELEM# 22800793 *(Maximum Von-Mises Stress)*

$u_{su} := \mathbf{5353} \cdot psi$ LC# 2031, ELEM# 22800793 *(Maximum Shear Stress)*

Margins of Safety

$MS_{tug} := \frac{F_{tug}}{FS_u \cdot u_{tu}} - \mathbf{1}$ $MS_{tug} = \mathbf{2.14}$ ***... Margin of Safety Tensile Ultimate***

$MS_{tyg} := \frac{F_{tyg}}{FS_y \cdot u_{ty}} - \mathbf{1}$ $MS_{tyg} = \mathbf{4.24}$ ***... Margin of Safety Tensile Yield***

$MS_{sug} := \frac{F_{sug}}{FS_u \cdot u_{su}} - \mathbf{1}$ $MS_{sug} = \mathbf{2.70}$ ***... Margin of Safety Shear Ultimate***

4.4 Guide Pins

4.4 AMS-02 Guide Pins, PAS Base Assembly

4.4.1 *Margins of Safety*

Table 4.4-1 Minimum Margin Of Safety Summary

Part/Dwg Number	Part Name/ Description	Material Heat Treatment	Critical Load Condition	Failure Mode	Margin of Safety	Reference Page
SDG39135818	Guide Pins	AL ALY 7050-T7451	Consistent On-Orbit Load Factor	Shear Ultimate	17.67	4.4-10

Notes:

1. Factors of Safety are 2.0 for Ultimate and 1.25 for Yield.
2. The way the AMS is stowed during Liftoff and Landing, the Guide Pins are not loaded.
3. 64 On-Orbit load cases, combined with the preload of the capture bar, were analyzed.
4. Boundary conditions are at the PAS Guide Pins and PAS handle locations.

4.4.2 *Factors of Safety*

The untested hardware is designed with a yield factor of safety 1.25 and an ultimate factor of safety 2.0 against limit loads for on-orbit.

Ref. AMS-02 :"Structural Verification Plan" JSC 28792 REV. E

4.4.3 *Description of Structure*

Figure 4.4-2 shows the Aft and Apex Guide Pins along with the PAS Base Assembly. There are a total of three Guide Pins (Figure 4.4-1) that are fastened with four 3/8" bolts to the PAS Base Assembly. The Guide Pins can not react loads axially along their length (L).

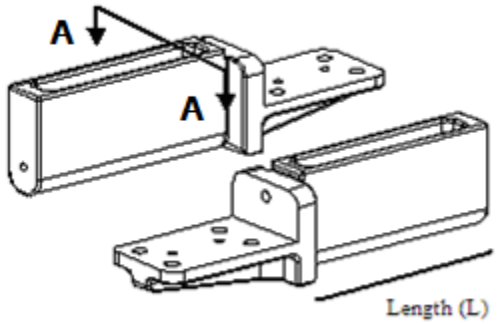

Figure 4.4-1 Cross Section AA, Guide Pins, PAS Base Assembly

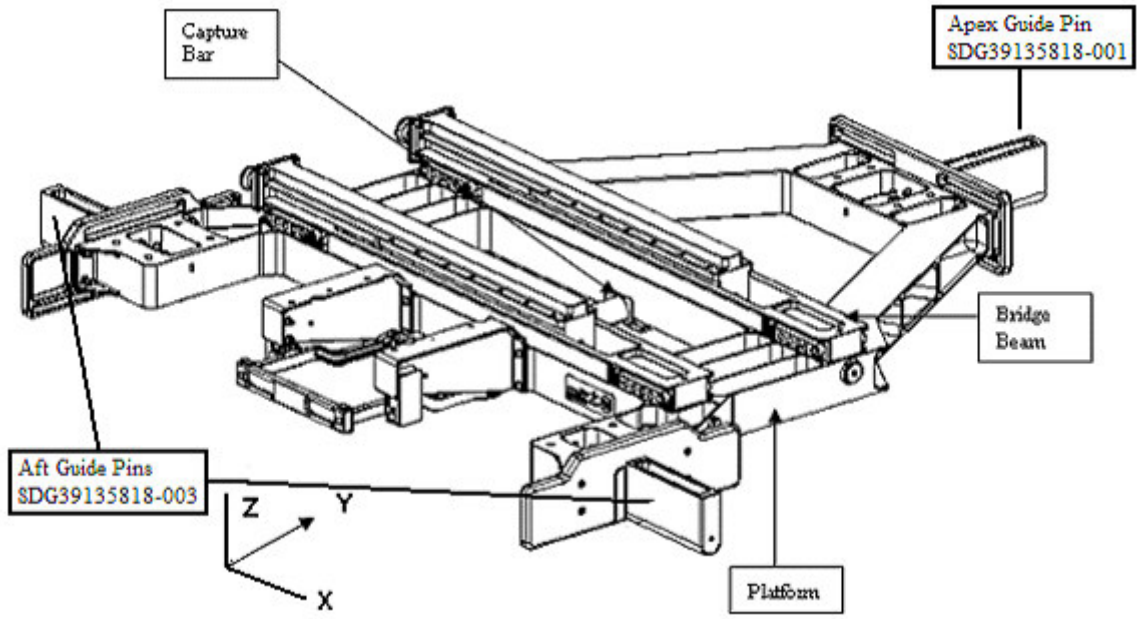

Figure 4.4-2 Guide Pins, PAS Base Assembly

4.4.3.1 Moment Arm Along the length of the Guide Pins to Section AA

Apex Guide Pin

41.570 in Active PAS, Distance From the Centerline of the Aft Guide Vanes to the Inner Edge of the Apex Guide Vane, Figure 4.4-3.

-41.000 in Passive PAS, Distance From the Centerline of the Aft Guide Pins to the Beginning of the Unsupported Portion of the Apex Guide Pin, Figure 4.4-4.

$L_{001} := 0.570$ in *Distance Along Length (L) to Section AA*

Aft Guide Pin

24.00 in Active PAS, Distance From the Centerline of the Apex Guide Vane to the Inner Edges of the Aft Guide Vanes, Figure 4.4-3.

-23.45 in Passive PAS, Distance From the Centerline of the Apex Guide Pin to the Beginning of the Unsupported Portion of the Aft Guide Pins, Figure 4.4-4.

$L_{003} := 0.550$ in *Distance Along Length (L) to Section AA*

Figure 4.4-5 Trimetric View of the Active PAS, labels the primary interfacing parts of the Active PAS.

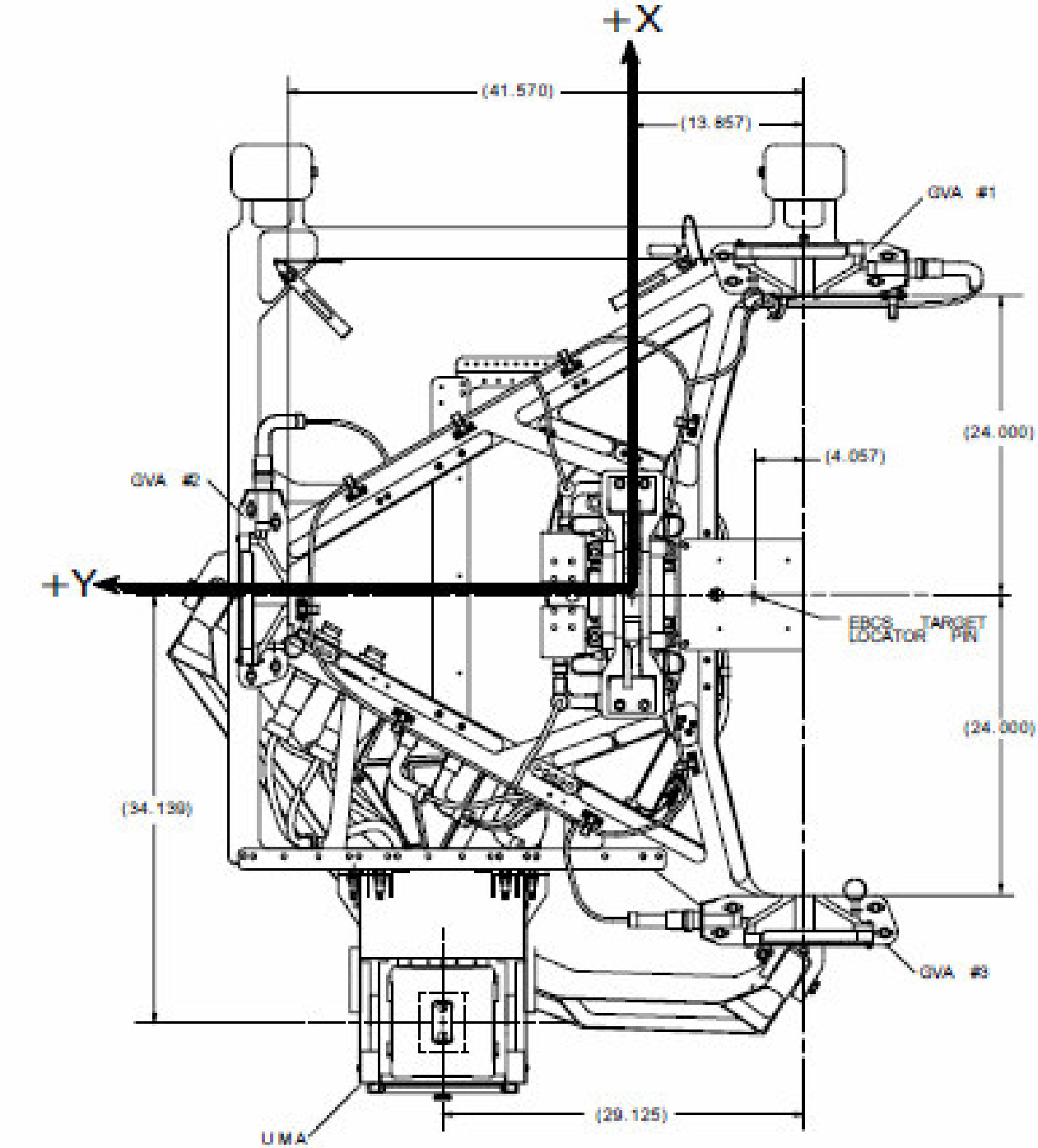

Figure 4.4-3 Top View of the Active PAS

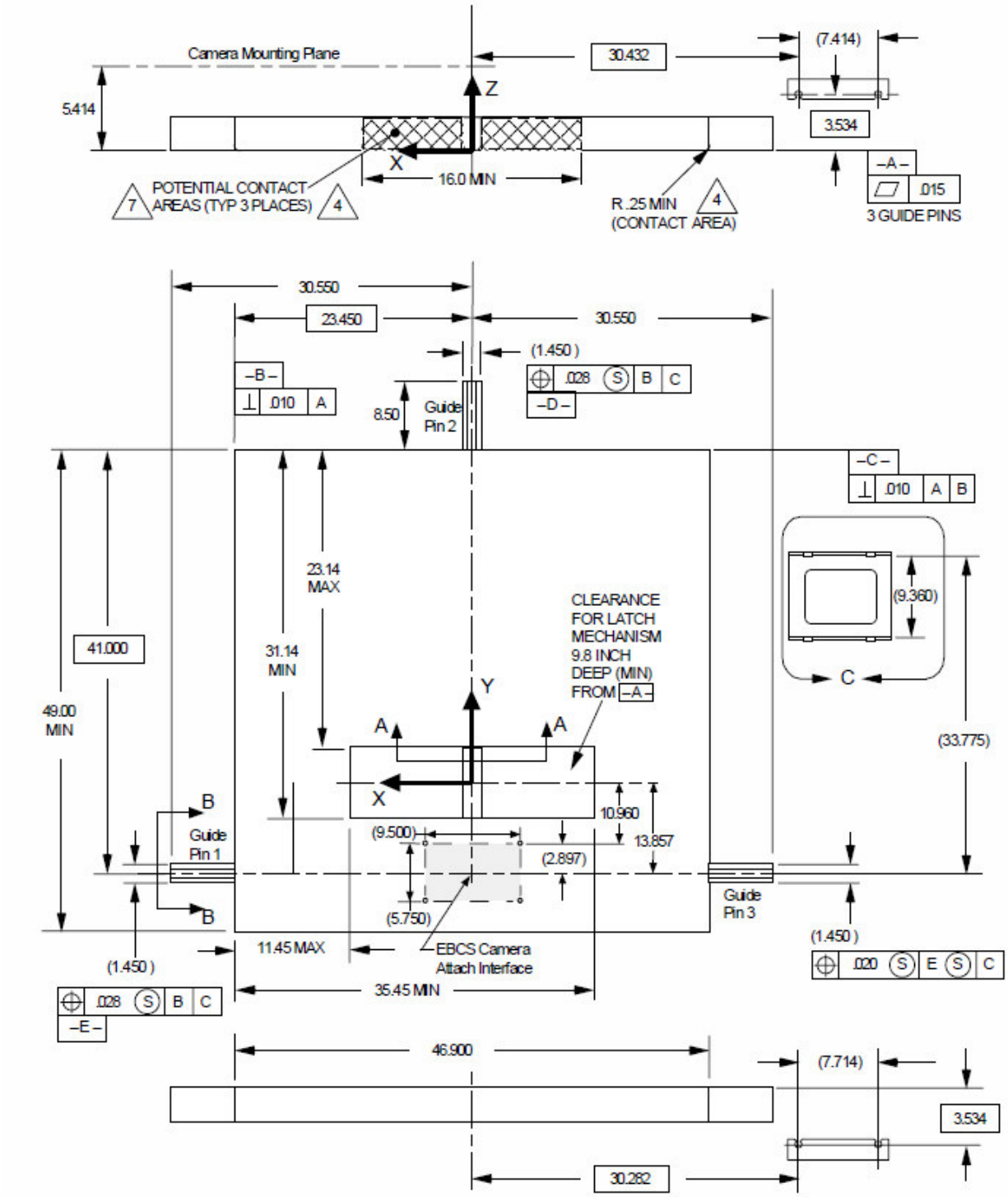

Figure 4.4-4 Bottom View of the Passive PAS

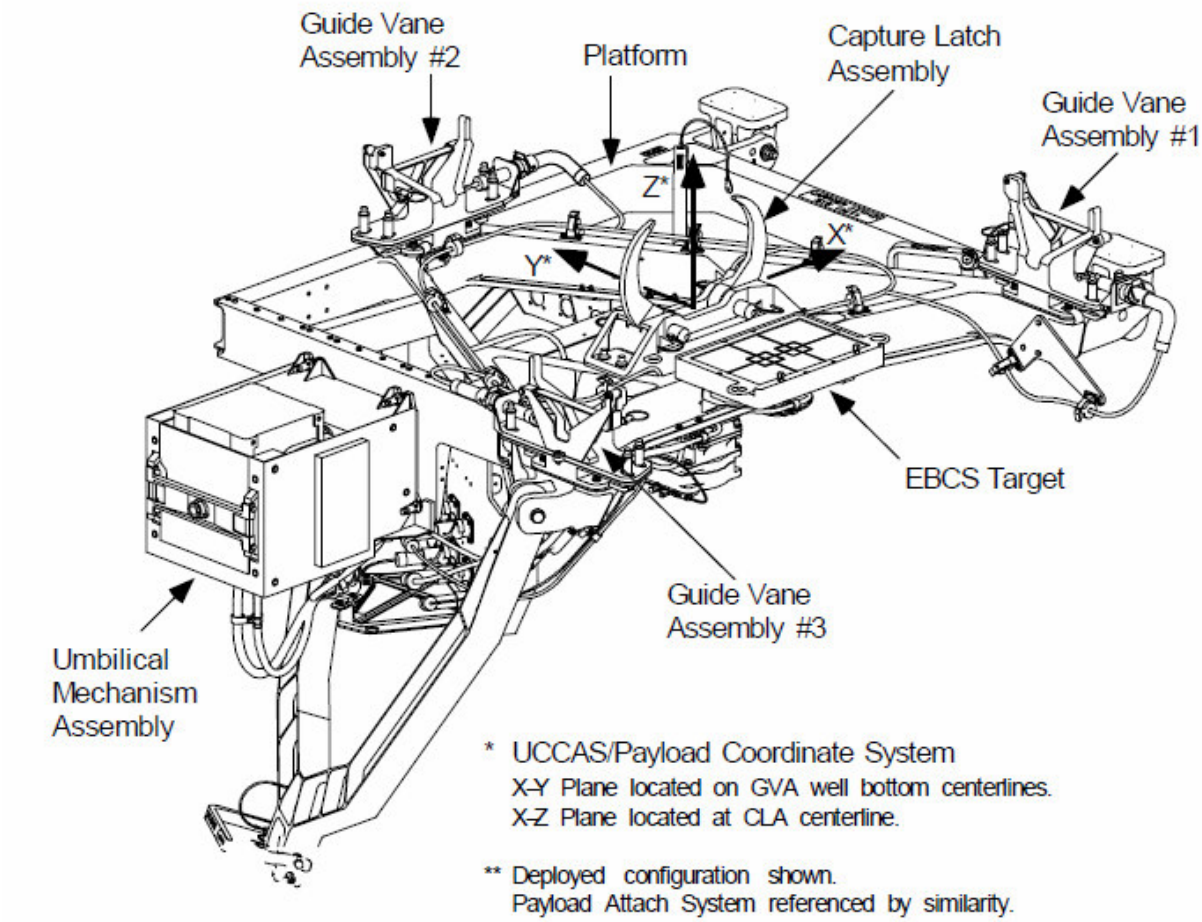

Figure 4.4-5 Trimetric View of the Active PAS

4.4.4 *Materials and Temperature*

The Guide Pins are made of 7050-T7451 Aluminum Alloy. The material properties are taken from Boeing Material Specification of BMS-7-323-C, and MIL-HDBK-5J. Temperature limits are provided by the Thermal Analysis Group. For on-orbit conditions, the maximum temperature of 151 ºF is applied, see Appendix C2.

4.4.5 *Description of Model and Model Checks*

The same finite element model was used for the PAS Base, Guide Pins, Aft and Vertex Brackets. For a detailed description of the model see Section 4.1.4. For a detailed description of the model checks, see Section 4.1.5.

The worst case loading for the guide pins was determined by taking the highest resultant reaction load (SPCFORCE) at any single Guide Pin (Figure 4.4-3) for the combined preload and on-orbit loading. The nodal SPCFORCES, from the corresponding Guide Pin reaction, along with the moment arm

corresponding to that Guide Pin (either L_{001} or L_{003}, Figure 4.4-1) were used to calculate maximum Tensile Ultimate stresses and the maximum Shear Ultimate stresses.

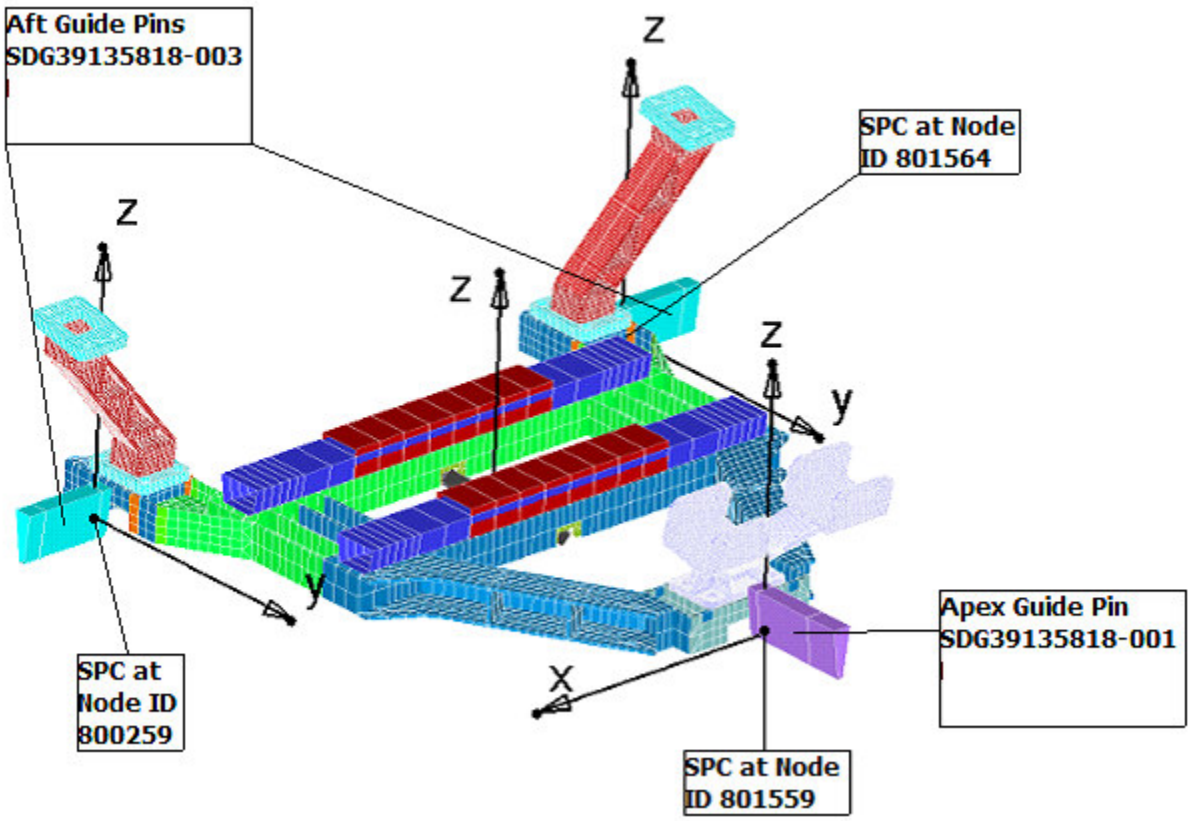

Figure 4.4-6 FEM of Guide Pins, PAS Base Assembly, Aft and Vertex Brackets

Figure 4.4-6 shows the finite element model of the Aft and Apex Guide Pins, the PAS Base Assembly, and the Aft and Vertex brackets. The origin of the black arrows show the location of the constraints (SPCs) and their corresponding Node IDs. The black arrow heads show the positive axis directions for those SPCFORCES.

4.4.6 Detailed Stress Analysis

Material and Allowables

AL Alloy 7050-T7451, 12.6" x 3.75" x 3.00", BMS-7-323-C

$Ftu := \mathbf{73000} \cdot psi$	*Tensile Ultimate Strength*	$FSy := \mathbf{1.25}$	*Yield Factor of Safety*
$Fcy := \mathbf{63000} \cdot psi$	*Compressive Yield Strength*	$FSu := \mathbf{2.0}$	*Ultimate Factor of Safety*
$Fsu := \mathbf{43000} \cdot psi$	*Shear Ultimate Strength*	$\beta := \mathbf{.97}$	*Thermal Expansion Coefficient @151ºF, App.C2*

Apex Guide Pin SDG39135818-001

Section AA Properties as Calculated in FEMAP V9.3.1

$A := \mathbf{3.51334} in^2$	*Area of guide pin*
$Izz := \mathbf{0.77625} in^4$	*Weak axis moment of inertia*
$Ixx := \mathbf{3.50011} in^4$	*Strong axis moment of inertia*
$c_x := \mathbf{0.725} in$	*centroid distance x*
$c_z := \mathbf{2.21839} in$	*centroid distance z*

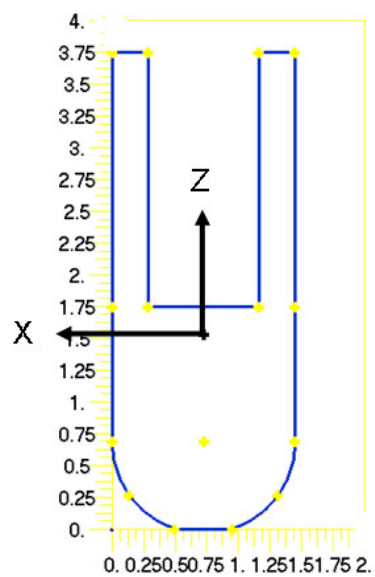

Figure 4.4-4a Section AA for Apex Guide Pin -001

$L_{001} := \mathbf{0.570} \cdot in$ *Distance Along Length (L) to Section AA on the Apex Guide Pin -001 See Figure 4.4-1*

Loads from SPC's for the Apex Guide Pin, SDG39135818-001

Note: The finite element "Model" (M) uses the coordinate system shown in Figure 4.4-3. But for the purpose of Loads definitions, the "Section" coordinate system shown in Figure 4.4-4 will be utilized. The file guidepin-sangster.dat contains SPCFORCEs (Node ID, Load Case, Fx (lbf), Fy (lbf), Fz (lbf)) in the Model's coordinate system. These SPCFORCEs must be translated into the local Section coordinate system for both the Apex Guide Pin -001 and for the Aft Guide Pins -003.

$data := READPRN(\text{"guidepin-sangster.dat"})$ *SPCFORCEs File Being Read Into Array "data"*

$ORIGIN := 1$ $\quad i := 1 .. rows(data)$ *Set Origin of Array to 1, Set "i" as Row Counter*

The SPCFORCEs file, guidepin-sangster.dat, contains the reaction forces for Nodes 800259 (Aft), 801559 (Apex), 801564 (Aft) for Load Cases 5001-5064 and has the following columnwise structure:

Column Header Row Data	**(1) Node ID**	**(2) Load Case**	**(3) Fx(M) lbf**	**(4) Fy(M) lbf**	**(5) Fz(M) lbf**
	$data_{i,1}$	$data_{i,2}$	$data_{i,3}$	$data_{i,4}$	$data_{i,5}$

$ID_i := data_{i,1}$ *Node ID Counter for Column 1*

$LC_i := data_{i,2}$ *Load Case ID Counter for Column 2*

-- Section Loads -- **-- Model Loads --**

$Fy001_i := data_{i,4} \cdot lbf$ *Axial Load*

$Fx001_i := data_{i,3} \cdot lbf$ *Shear along X Axis*

$Fz001_i := data_{i,5} \cdot lbf$ *Shear along Z Axis*

$Mx001_i := data_{i,5} \cdot lbf \cdot L_{001}$ *Moment about X Axis Caused by Fz*

$Mz001_i := data_{i,3} \cdot lbf \cdot L_{001}$ *Moment about Z Axis Caused by Fx*

Bending Stresses for the Apex Guide Pin, SDG39135818-001

Calculate Stresses at Section AA Resulting from the Preload of the Capture Bar Combined With On-Orbit Loading, for Apex Guide Pin -001

$$u001 := \sqrt{\left(\frac{Mz001 \cdot c_x}{Izz}\right)^2 + \left(\frac{Mx001 \cdot c_z}{Ixx}\right)^2}$$ $\max(u001) = \mathbf{1234.1} \cdot psi$

$$001 := \frac{\sqrt{Fx001^2 + Fz001^2}}{A}$$ $\max(\ 001) = \mathbf{931.5} \cdot psi$

Maximum Shear Stress for Apex Guide Pin -001

$$max001 := \sqrt{\left(\frac{u001}{2}\right)^2 + 001^2}$$

$$max(max001) = 1117.3 \cdot psi$$

Maximum Principal Stress for Apex Guide Pin -001

$$u_{max001} := \frac{u001}{2} + max001$$

$$max(u_{max001}) = 1734.4 \cdot psi$$

Margins of Safety for Apex Guide Pin -001

$$MStu001_i := \begin{cases} \left(\frac{Ftu \cdot \beta}{FSu \cdot u_{max001_i}}\right) - 1 & \text{if } u_{max001_i} > 0 \\ 999 & \text{otherwise} \end{cases}$$

$min(MStu001) = 19.41$ ***Tensile Ultimate***

$NodeIDtu001 := lookup(min(MStu001), MStu001, ID) = (801559)$ ***Node ID***

$LCtu001 := lookup(min(MStu001), MStu001, LC) = (5040)$ ***Load Case***

$$MSsu001_i := \begin{cases} \left(\frac{Fsu \cdot \beta}{FSu \cdot max001_i}\right) - 1 & \text{if } max001_i > 0 \\ 999 & \text{otherwise} \end{cases}$$

$min(MSsu001) = 17.67$ ***Shear Ultimate***

$NodeIDsu001 := lookup(min(MSsu001), MSsu001, ID) = (801559)$ ***Node ID***

$LCsu001 := lookup(min(MSsu001), MSsu001, LC) = (5040)$ ***Load Case***

Aft Guide Pin SDG39135818-003

Section AA Properties as Calculated in FEMAP V9.3.1

$A := \mathbf{3.51334}\,in^2$ *Area of guide pin*

$Izz := \mathbf{0.77625}\,in^4$ *Weak axis moment of inertia*

$Iyy := \mathbf{3.50011}\,in^4$ *Strong axis moment of inertia*

$c_y := \mathbf{0.725}\,in$ *centroid distance y*

$c_z := \mathbf{2.21839}\,in$ *centroid distance z*

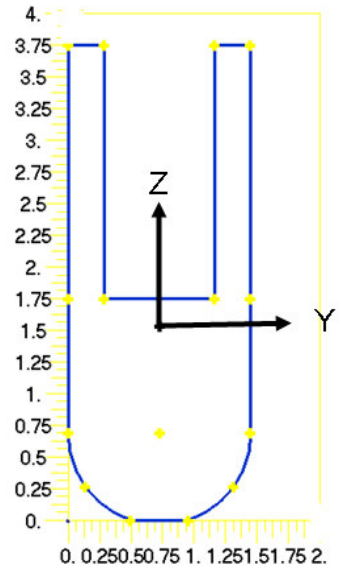

Figure 4.4-4b Section AA for Aft Guide Pins -003

$L_{003} := \mathbf{0.55} \cdot in$ *Distance Along Length (L) to Section AA on the Aft Guide Pins -003*
See Figure 4.4-1

Loads from SPC's for the Aft Guide Pin, , SDG39135818-003

-- Section Loads --

$Fx003_i := data_{i,\mathbf{3}} \cdot lbf$ *Axial Load*

$Fy003_i := data_{i,\mathbf{4}} \cdot lbf$ *Shear along Y Axis*

$Fz003_i := data_{i,\mathbf{5}} \cdot lbf$ *Shear along Z Axis*

-- Model Loads --

$My003_i := data_{i,\mathbf{5}} \cdot lbf \cdot L_{003}$ *Moment about Y Axis Caused by FZ*

$Mz003_i := data_{i,\mathbf{4}} \cdot lbf \cdot L_{003}$ *Moment about Z Axis Caused by FY*

Bending Stresses for the Aft Guide Pins, SDG39135818-003

Calculate Stresses at Section AA Resulting from the Preload of the Capture Bar Combined With On-Orbit Loading, for Aft Guide Pins -003

$$u003 := \sqrt{\left(\frac{Mz003 \cdot c_y}{Izz}\right)^2 + \left(\frac{My003 \cdot c_z}{Iyy}\right)^2} \qquad \max(u003) = \mathbf{1129.5} \cdot psi$$

$$003 := \frac{\sqrt{Fy003^2 + Fz003^2}}{A} \qquad \max(\ 003) = \mathbf{900.5} \cdot psi$$

Maximum Shear Stress for Aft Guide Pins -003

$$max003 := \sqrt{\left(\frac{u003}{2}\right)^2 + \ 003^2} \qquad \max(\ max003) = \mathbf{1059.2} \cdot psi$$

Maximum Principal Stress for Aft Guide Pins -003

$$u_{max003} := \frac{u003}{2} + \ max003 \qquad \max(u_{max003}) = \mathbf{1623.9} \cdot psi$$

Margins of Safety for Aft Guide Pins -003

$$MStu003_i := \begin{cases} \left(\dfrac{Ftu \cdot \beta}{FSu \cdot u_{max003_i}}\right) - 1 & \text{if } u_{max003_i} > 0 \\ 999 & \text{otherwise} \end{cases}$$

$\min(MStu003) = \mathbf{20.80}$ ***Tensile Ultimate***

$NodeIDtu003 := lookup(\min(MStu003), MStu003, ID) = (\mathbf{801564})$ ***Node ID***

$LCtu003 := lookup(\min(MStu003), MStu003, LC) = (\mathbf{5056})$ ***Load Case***

$$MSsu003_i := \begin{cases} \left(\dfrac{Fsu \cdot \beta}{FSu \cdot \ max003_i}\right) - 1 & \text{if } max003_i > 0 \\ 999 & \text{otherwise} \end{cases}$$

$\min(MSsu003) = \mathbf{18.69}$ ***Shear Ultimate***

$NodeIDsu003 := lookup(\min(MSsu003), MSsu003, ID) = (\mathbf{801564})$ ***Node ID***

$LCsu003 := lookup(\min(MSsu003), MSsu003, LC) = (\mathbf{5056})$ ***Load Case***

4.5 BCS Avionics Bracket

4.5 BCS Avionics Bracket, SDG39135822

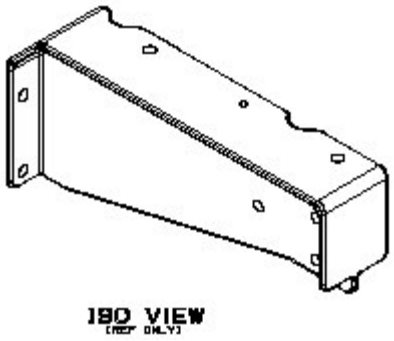

The maximum load camera weight is: $camera := 25 \cdot lb$

Camera Bracket, is made of 7075-T7351 and is good by engineering judgement, based upon the 25 lbf load and the significant cross section.

4.6 PAS Bridge Bracket

4.6 AMS-02 PAS Bridge, PAS Bridge Assembly, SDG39135837-001

4.6.1 *Margins of Safety*

Table 4.6-1 Minimum Margin Of Safety Summary

Part/Dwg Number	Part Name/ Description	Material Heat Treatment	Critical Load Condition	Failure Mode	Margin of Safety	Reference Page
SDG39135837-001	PAS Bridge	AL ALY 7050-T7451	On-Orbit Inertia Steady State	Shear Ultimate	0.04	4.6-16

Notes:

1. Factors of Safety are 2.0 for Ultimate and 1.25 for Yield.
2. 64 Liftoff, On-Orbit, and Landing load cases were analyzed.

4.6.2 *Factors of Safety*

The untested hardware is designed with a yield factor of safety 1.25 and an ultimate factor of safety 2.0 against limit loads for on-orbit.

Ref. AMS-02 :"Structural Verification Plan" JSC 28792 REV. E

4.6.3 *Description of Structure*

Figure 4.6-1 shows the PAS Bridge and the PAS Bridge Assembly. Figure 4.6-2 shows the Bridge Beam in relation to the PAS Base Assembly.

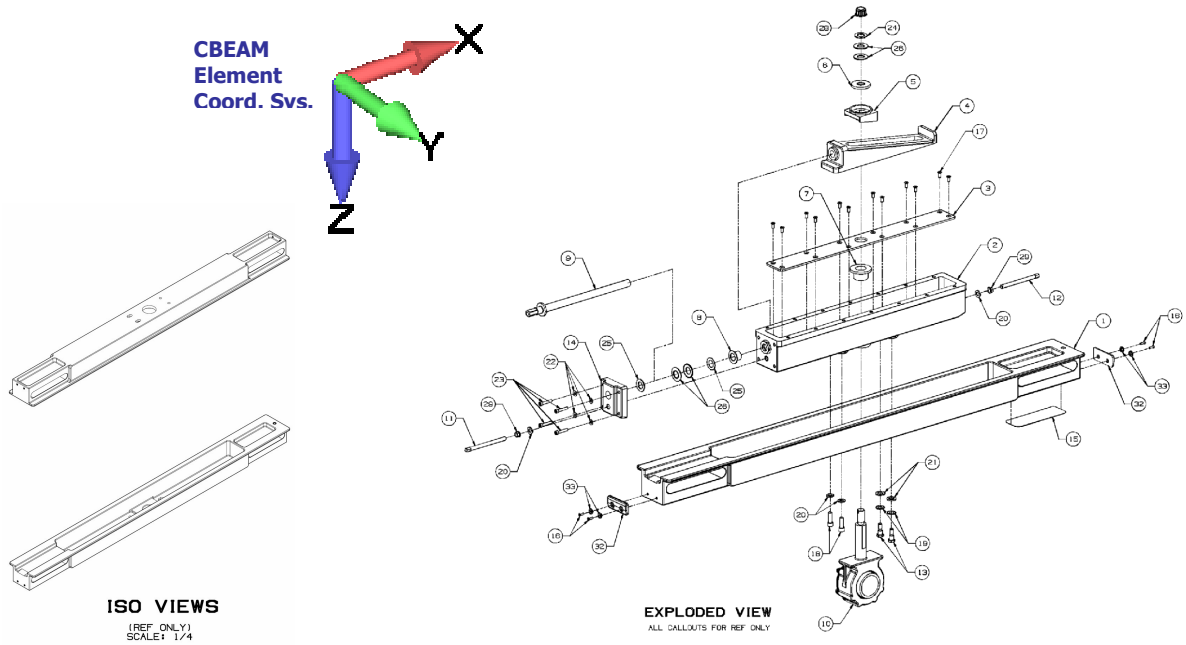

Figure 4.6-1 Bridge Assy PAS Bridge Assy SDG39135837 and PAS Bridge Assy AMS Passive PAS Assy SEG39135836

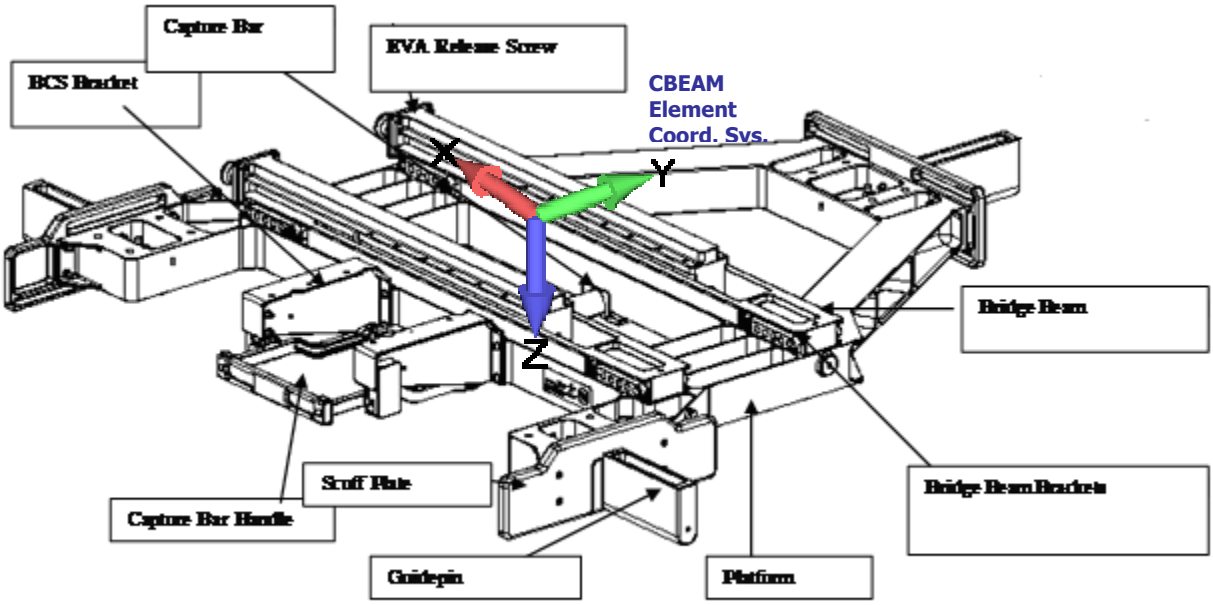

Figure 4.6-2 AMS Passive PAS Base Assy, PAS Assy SEG39135815

4.6.4 *Materials and Temperature*

The Bridge Beam is made of 7050-T7451 Aluminum Alloy. The material properties are taken from Boeing Material Specification of BMS-7-323-C, and MIL-HDBK-5J. Temperature limits are provided by the Thermal Analysis Group. For on-orbit conditions, the maximum temperature of 151 ºF is applied, see Appendix C2.

Table 4.6-2 Material Allowables

Dwg/Part Number	Description	Material	Allowables
SDG39135837-001	PAS Bridge	AL ALY 7050-T7451 BMS-7-323-C Plate 2.001-3.000 A basis	F_{tu} = 73,000 psi F_{ty} = 63,000 psi F_{cy} = 61,000 psi F_{su} = 43,000 psi E = 10.3E06 psi E_c = 10.6E06 psi G = 3.9E06 psi

4.6.5 *Description of Model and Model Checks*

Figure 4.6-3 shows the finite element model used for the Bridge Beam. The same finite element model was used for the Bridge Beam, PAS Base, Guide Pins, Aft and Vertex Brackets. For a detailed description of the model see Section 4.1.4. For a detailed description of the model checks, see Section 4.1.5.

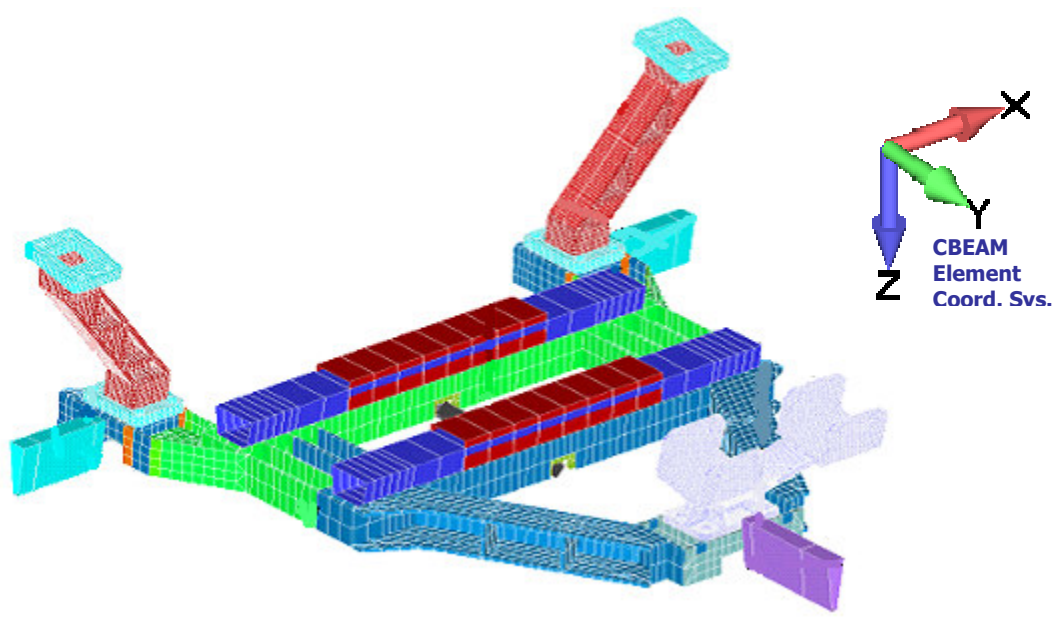

Figure 4.6-3 FEM of Bridge Beam, Guide Pins, PAS Base Assembly, Aft and Vertex Bracket

4.6.6 Detailed Stress Analysis

Summary of Load Conditions

The bridge beam was analyzed for four load conditions

Flight (Liftoff)
On-Orbit
On-Orbit Steady State
Landing

Factors of Safety

$FS_u := \mathbf{2.0}$

$FS_y := \mathbf{1.25}$

Materials and Temperature

Material Allowables

AL ALY, 7050-T7451, BMS-7-323-C, Plate, 37.575 x 3.650 x 2.070, A

$F_{tu} := \mathbf{73000} \cdot psi$ $F_{ty} := \mathbf{63000} \cdot psi$ $F_{su} := \mathbf{43000} \cdot psi$

Temperature Degradation

$\beta_{tu} := \mathbf{0.92}$ $\beta_{ty} := \mathbf{0.97}$

Detailed Stress Analysis

Section Properties

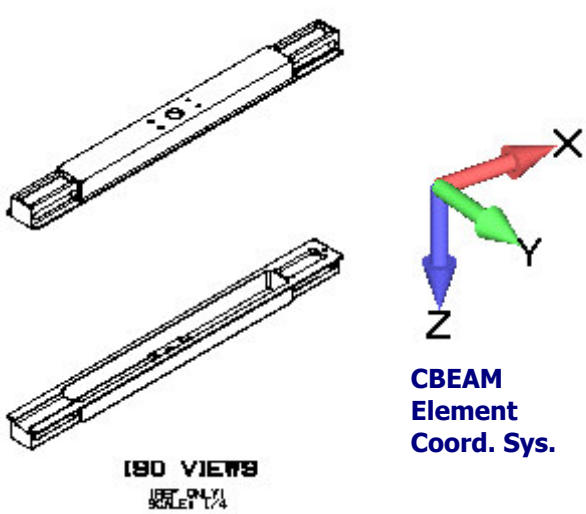

Figure 4.6-1 ISO View of Bridge Assembly, PAS Bridge Assembly, SDG39135837

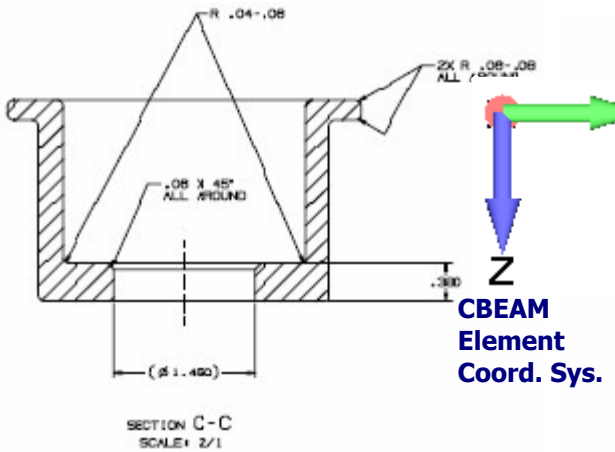

Figure 4.6-2 Section C-C, Minimum Section w/Bearing Thru Hole

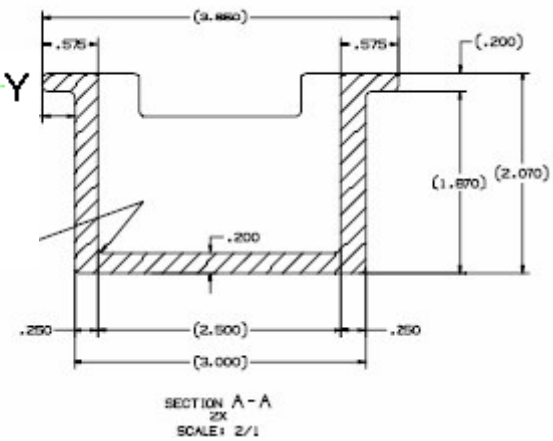

Figure 4.6-3 Section A-A, Use For Any Dimensions Not Shown in Section C-C

Calculation of Section Properties for Irregular Section

This calculation is based on information given in the Jan 22, 1976 Machine Design in "Properties of Plane Cross Sections" by Fleix Wojciechowski

Assumptions (Figure 4.6-4):

1. **The entire cross section is contained in the first quadrant.**
2. **Small curved boundaries are approximated by straight line segements.**
3. **Centroid of the section is a small distance from the origin of the coordinate system.**
4. **Order of entry for vertices is clockwise.**
5. **For holes in section, enter coordinates going counterclockwise.**

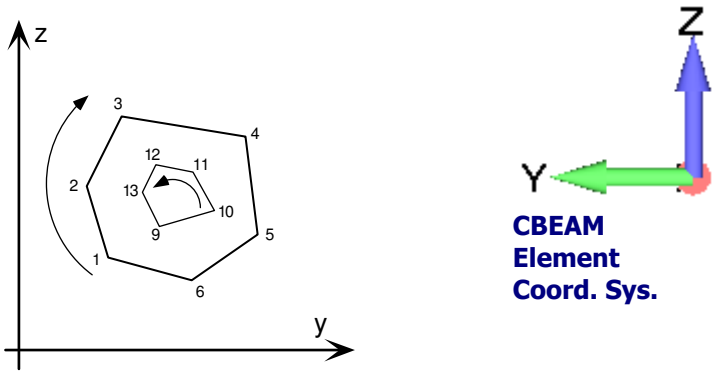

Figure 4.6-4 Assumptions for Calculation of Section

Enter the y and z coordinates of the vertices of the cross section.

Note: The last two vertices are the same as the first (0,0).

ORIGIN := **1**

$$y := \begin{pmatrix} 0.0 \\ 0.0 \\ .325 \\ .325 \\ 1.1 \\ 1.1 \\ 2.55 \\ 2.55 \\ 3.325 \\ 3.325 \\ 3.65 \\ 3.65 \\ 3.075 \\ 3.075 \\ 2.55 \\ 1.1 \\ .575 \\ .575 \\ 0 \\ 0 \end{pmatrix} \cdot in \qquad z := \begin{pmatrix} 0.0 \\ .2 \\ .2 \\ 2.070 \\ 2.07 \\ 1.6825 \\ 1.6825 \\ 2.07 \\ 2.07 \\ .2 \\ .2 \\ 0 \\ 0 \\ 1.6825 \\ 1.6825 \\ 1.6825 \\ 1.6825 \\ 0 \\ 0 \\ 0 \end{pmatrix} \cdot in$$

Define n, used in the summations

$n := rows(y) - 1$

Find the maximum value of y or z

$$maxvalue := \begin{cases} max(y) & \text{if } max(y) \ge max(z) \\ max(z) & \text{otherwise} \end{cases}$$

$max(y) = 3.650 \cdot in$ $\qquad$ $max(z) = 2.070 \cdot in$

Plot of Section Vertices

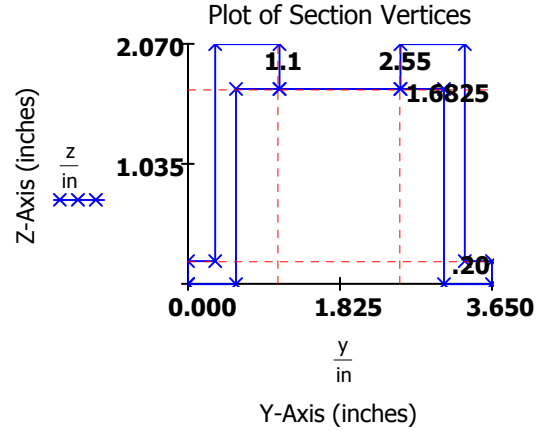

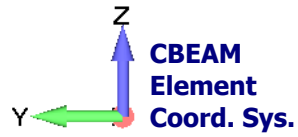

The area is found by using the summation

$$Area := -1 \cdot \sum_{i=1}^{n} \left[\left(z_{i+1} - z_i\right) \cdot \frac{y_{i+1} + y_i}{2} \right]$$

$Area = 1.572 \cdot in^2$

Next, find the y and z coordinates of the centroid of the section

$$ybar := \frac{1}{Area}\cdot\sum_{i=1}^{n}\left[\frac{z_{i+1}-z_i}{8}\cdot\left[\left(y_{i+1}+y_i\right)^2+\frac{\left(y_{i+1}-y_i\right)^2}{3}\right]\right] \qquad ybar = 1.825\cdot in$$

$$zbar := \frac{1}{Area}\cdot\sum_{i=1}^{n}\left[\frac{y_{i+1}-y_i}{8}\cdot\left[\left(z_{i+1}+z_i\right)^2+\frac{\left(z_{i+1}-z_i\right)^2}{3}\right]\right] \qquad zbar = 1.175\cdot in$$

Find the maximum distance from the centroid to the outer fiber

$cy := y - ybar$ $\qquad$ $\max(cy) = 1.825\cdot in$ $\qquad$ $\min(cy) = -1.825\cdot in$

$cz := z - zbar$ $\qquad$ $\max(cz) = 0.895\cdot in$ $\qquad$ $\min(cz) = -1.175\cdot in$

$j := 1 .. rows(cy)$ $\qquad$ *Define The Counter j To Be The Row Number In cy*

Next, find the moment of inertias of the cross section with respect to the coordinate axes

$$Iya := \sum_{i=1}^{n}\left[\frac{\left(y_{i+1}-y_i\right)\cdot\left(z_{i+1}+z_i\right)}{24}\cdot\left[\left(z_{i+1}+z_i\right)^2+\left(z_{i+1}-z_i\right)^2\right]\right] \qquad Iya = 2.917\cdot in^4$$

$$Iza := -1\cdot\sum_{i=1}^{n}\left[\frac{\left(z_{i+1}-z_i\right)\cdot\left(y_{i+1}+y_i\right)}{24}\cdot\left[\left(y_{i+1}+y_i\right)^2+\left(y_{i+1}-y_i\right)^2\right]\right] \qquad Iza = 7.964\cdot in^4$$

$$Iyza := \sum_{i=1}^{n}\left[\begin{array}{ll} 0\cdot in^4 & \text{if } y_{i+1} = y_i \\ \frac{1}{y_{i+1}-y_i}\cdot\left[\begin{array}{l}\frac{1}{8}\cdot\left(z_{i+1}-z_i\right)^2\cdot\left(y_{i+1}+y_i\right)\cdot\left[\left(y_{i+1}\right)^2+\left(y_i\right)^2\right]\ldots \\ +\left[\begin{array}{l}\frac{1}{3}\cdot\left[\left(z_{i+1}-z_i\right)\cdot\left(y_{i+1}\cdot z_i-y_i\cdot z_{i+1}\right)\cdot\left[\left(y_{i+1}\right)^2+y_{i+1}\cdot y_i+\left(y_i\right)^2\right]\right]\ldots \\ +\frac{1}{4}\cdot\left(y_{i+1}\cdot z_i-y_i\cdot z_{i+1}\right)^2\cdot\left(y_{i+1}+y_i\right)\end{array}\right]\end{array}\right] & \text{otherwise}\end{array}\right]$$

****Note: The if statement to check if yi+1 is equal to yi** $\qquad$ $Iyza = 3.372\cdot in^4$

Now, find the moments of inertia about the centroidal axes

$Iy := Iya - Area\cdot zbar^2$ $\qquad$ $Iy = 0.7457\cdot in^4$

$Iz := Iza - Area\cdot ybar^2$ $\qquad$ $Iz = 2.7288\cdot in^4$

$Iyz := Iyza - Area\cdot ybar\cdot zbar$ $\qquad$ $Iyz = 0.0000\cdot in^4$

Calculate the angle that the neutral axes make with the centroidal axes

$$u := \begin{cases} 90 \cdot deg & \text{if } Iy = Iz \\ \frac{1}{2} \cdot atan\left(\frac{-2 \cdot Iyz}{Iy - Iz}\right) & \text{otherwise} \end{cases} \qquad u = -0 \cdot deg$$

Prepare equations for graph

$i := 1 .. (n)$

$$zneutral_i := \begin{cases} zbar & \text{if } u = 0 \\ zbar + \tan(u) \cdot (y_i - ybar) & \text{otherwise} \end{cases}$$

$$yneutral_i := \begin{cases} \frac{\max(z) \cdot 2}{n} \cdot i & \text{if } u < .0001 \\ zbar + \tan(u + 90 \cdot deg) \cdot (y_i - ybar) & \text{otherwise} \end{cases}$$

$$yyneutral_i := \begin{cases} ybar & \text{if } u < .0001 \\ y_i & \text{otherwise} \end{cases}$$

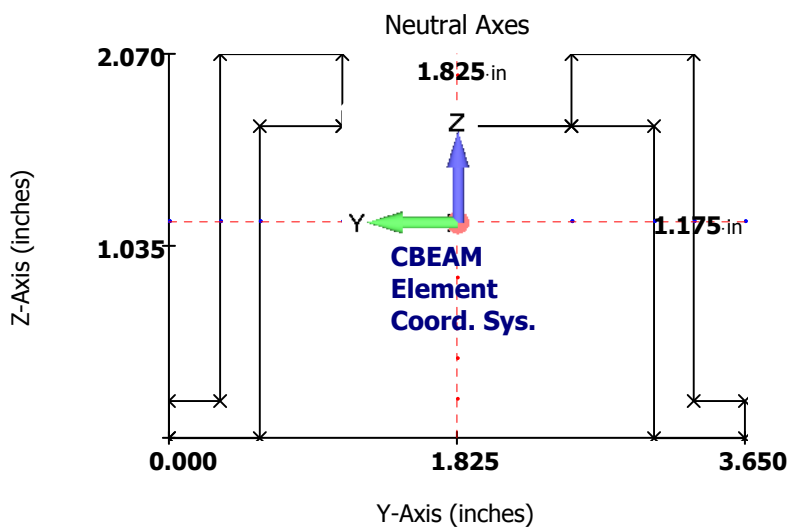

U shapped cross section, from NASTRAN card, match the calculated values above

$Iz := 2.729 \cdot in^4$ $\quad Iy := .7457 \cdot in^4$ $\quad J := 0.0442752 \cdot in^4$ $\quad Area := 1.572 \cdot in^2$

$cz := .895 \cdot in$ $\quad cy := 1.825 \cdot in$ $\quad r := 1.91919 \cdot in$

Figure 4.6-5 Section Properties From the NASTRAN PBEAM Card

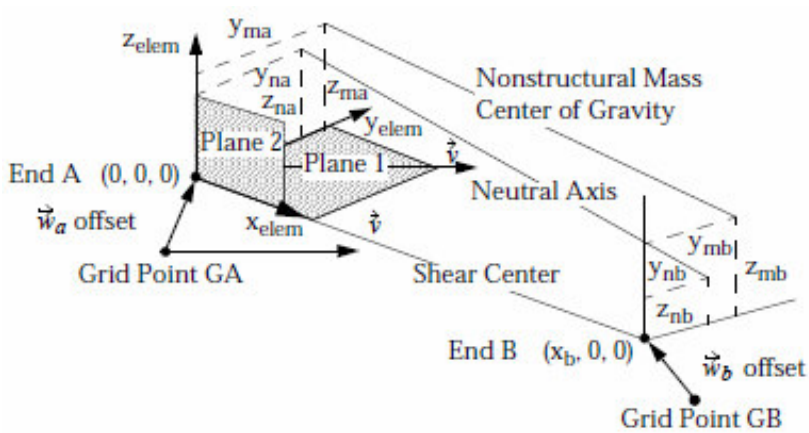

Figure 4.6-6 NASTRAN CBEAM Element Coordinate System

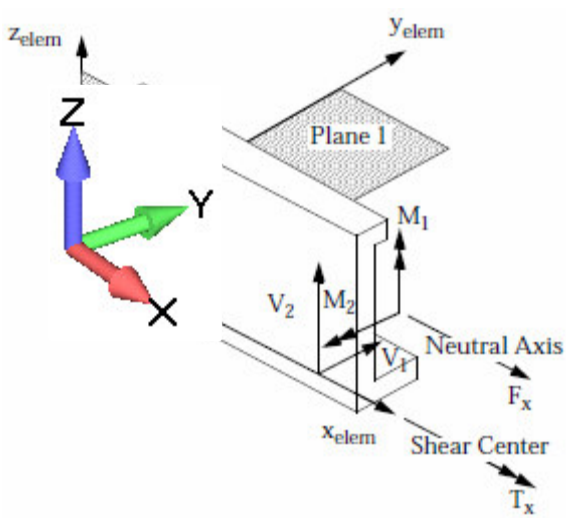

Our Fy is the negative of NASTRAN's M2

Figure 4.6-7 NASTRAN CBEAM Element Internal Forces and Moments

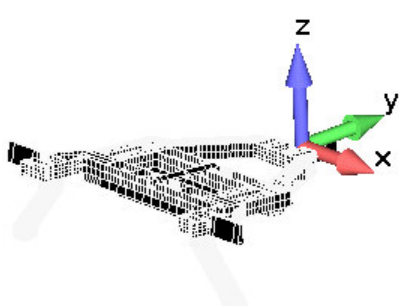

CBEAM Element Coord. Sys.

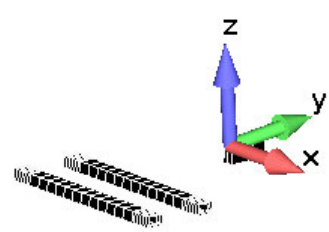

Figure 4.6-8 Bridge Beam FEM Showing x_{elem} Direction (red) and y_{elem} Direction (green)

Match Analysis Force and Moment Inputs to CBEAM Element Internal Directions

1	2	3	4	5	6	7	8	9	10	11	12
ID	SUBCASE	MOM-A-1	MOM-A-2	SHEAR-A-1	SHEAR-A-2	AXIAL-A	TOT-TORQ-A	MOM-B-1	MOM-B-2	SHEAR-B-1	SHEAR-B-2

Fx (axial) = Fx (Column 7)

Fy (shear) = V1 (Columns 5 and 11)

Fz (shear) = V2 (Columns 6 and 12)

My = -M2 (Columns 4 and 10)

Mz = M1 (Columns 3 and 9)

T (torque) = Tx (Column 8)

Liftoff/Flight Loads, Minimum Cross Section w/Bearing Thru Hole

Read formatted Naspost output. Naspost file called PASBridgeBeam-SortFlight.nas.lis

$forces := READPRN(\text{"beams-Flight.txt"})$

$i := 1 .. rows(forces)$ $\quad cases_i := forces_{i,2}$ $\quad cases_{i+rows(forces)} := forces_{i,2}$

1	2	3	4	5	6	7	8	9	10	11	12
ID	SUBCASE	MOM-A-1	MOM-A-2	SHEAR-A-1	SHEAR-A-2	AXIAL-A	TOT-TORQ-A	MOM-B-1	MOM-B-2	SHEAR-B-1	SHEAR-B-2

Load data from first end of beam

$Fx_i := forces_{i,7} \cdot lbf$ $\quad Fy_i := forces_{i,5} \cdot lbf$ $\quad Fz_i := forces_{i,6} \cdot lbf$

$T_i := forces_{i,8} \cdot in \cdot lbf$ $\quad My_i := -forces_{i,4} \cdot in \cdot lbf$ $\quad Mz_i := forces_{i,3} \cdot in \cdot lbf$

Load data from second end of beam

$Fx_{i+rows(forces)} := forces_{i,7} \cdot lbf$ $\quad Fy_{i+rows(forces)} := forces_{i,11} \cdot lbf$ $\quad Fz_{i+rows(forces)} := forces_{i,12} \cdot lbf$

$T_{i+rows(forces)} := forces_{i,8} \cdot in \cdot lbf$ $\quad My_{i+rows(forces)} := -forces_{i,10} \cdot in \cdot lbf$ $\quad Mz_{i+rows(forces)} := forces_{i,9} \cdot in \cdot lbf$

Calculate Stresses

$i := 1 .. \text{rows}(forces) \cdot 2$

$\sigma_{i,j} := \frac{Fx_i}{Area} + \frac{My_i \cdot cz_j}{Iy} - \frac{Mz_i \cdot cy_j}{Iz}$ $\quad \max(\sigma) = 1422 \cdot psi$ *Normal is direct axial plus bending*

$\tau v_i := \sqrt{\left(\frac{Fy_i}{Area}\right)^2 + \left(\frac{Fz_i}{Area}\right)^2}$ $\quad \max(\tau v) = 82 \cdot psi$ *Shear due to transverse loading*

$\tau t := T \cdot \frac{r}{J}$ $\quad \max(\tau t) = 1214 \cdot psi$ *Shear due to torsion*

$\tau := \tau v + \tau t$ $\quad \max(\tau) = 1260 \cdot psi$ *Combined shear*

$p1_{i,j} := \frac{\sigma_{i,j}}{2} + \left[\left(\frac{\sigma_{i,j}}{2}\right)^2 + (\tau_i)^2\right]^{\frac{1}{2}}$ $\quad \max(p1) = 1638 psi$ *Principal Stresses*

$\quad \min(p1) = 0.000 psi$

$p2_{i,j} := \frac{\sigma_{i,j}}{2} - \left[\left(\frac{\sigma_{i,j}}{2}\right)^2 + (\tau_i)^2\right]^{\frac{1}{2}}$ $\quad \max(p2) = 0.000 psi$

$\quad \min(p2) = -1771 psi$

$RES_i := \sqrt{(Fx_i)^2 + (Fy_i)^2 + (Fz_i)^2}$ $\quad \max(RES) = 128.565 \cdot lbf$

$Flight\ max := \max\left(\max\left(\overrightarrow{|p1|}\right), \max\left(\overrightarrow{|p2|}\right)\right)$ $\quad f_{tu} := Flight\ max = 1771 \cdot psi$ *Maximum Principal*

$vm_{i,j} := \sqrt{(p1_{i,j})^2 + (p2_{i,j})^2 - p1_{i,j} \cdot p2_{i,j}}$ $\quad f_{ty} := \max(vm) = 2240 \cdot psi$ *Von-Mises Stress*

$\tau max_{i,j} := \sqrt{\frac{1}{4} \cdot (\sigma_{i,j})^2 + (\tau_i)^2}$ $\quad f_{su} := \max(\tau max) = 1281 \cdot psi$ *Maximum shear*

$output := \text{augment}\left(cases, \frac{p1}{psi}, \frac{p2}{psi}\right)$ $\quad \text{WRITEPRN}(\text{"bridgebeamout-Flight.txt"}) := output$

Margins of Safety for Liftoff, Minimum Cross Section w/Bearing Thru Hole

$MS_{tu} := \left(\frac{F_{tu} \cdot \beta_{tu}}{FS_u \cdot f_{tu}}\right) - 1 = 17.97$ *Tensile Ultimate*

$MS_{ty} := \left(\frac{F_{ty} \cdot \beta_{ty}}{FS_y \cdot f_{ty}}\right) - 1 = 20.83$ *Tensile Yield*

$MS_{su} := \left(\frac{F_{su} \cdot \beta_{tu}}{FS_u \cdot f_{su}}\right) - 1 = 14.44$ *Shear Ultimate*

Landing Loads, Minimum Cross Section w/Bearing Thru Hole

Read formatted Naspost output. Naspost file called PASBridgeBeam-SortLanding.nas.lis

forces := READPRN("**beams-Landing.txt**")

$i := 1 .. \text{rows}(\text{forces})$ $\quad \text{cases}_i := \text{forces}_{i,2}$ $\quad \text{cases}_{i+\text{rows}(\text{forces})} := \text{forces}_{i,2}$

1	2	3	4	5	6	7	8	9	10	11	12
ID	SUBCASE	MOM-A-1	MOM-A-2	SHEAR-A-1	SHEAR-A-2	AXIAL-A	TOT-TORQ-A	MOM-B-1	MOM-B-2	SHEAR-B-1	SHEAR-B-2

Load data from first end of beam

$Fx_i := \text{forces}_{i,7} \cdot \text{lbf}$ $\quad Fy_i := \text{forces}_{i,5} \cdot \text{lbf}$ $\quad Fz_i := \text{forces}_{i,6} \cdot \text{lbf}$

$T_i := \text{forces}_{i,8} \cdot \text{in} \cdot \text{lbf}$ $\quad My_i := -\text{forces}_{i,4} \cdot \text{in} \cdot \text{lbf}$ $\quad Mz_i := \text{forces}_{i,3} \cdot \text{in} \cdot \text{lbf}$

Load data from second end of beam

$Fx_{i+\text{rows}(\text{forces})} := \text{forces}_{i,7} \cdot \text{lbf}$ $\quad Fy_{i+\text{rows}(\text{forces})} := \text{forces}_{i,11} \cdot \text{lbf}$ $\quad Fz_{i+\text{rows}(\text{forces})} := \text{forces}_{i,12} \cdot \text{lbf}$

$T_{i+\text{rows}(\text{forces})} := \text{forces}_{i,8} \cdot \text{in} \cdot \text{lbf}$ $\quad My_{i+\text{rows}(\text{forces})} := -\text{forces}_{i,10} \cdot \text{in} \cdot \text{lbf}$ $\quad Mz_{i+\text{rows}(\text{forces})} := \text{forces}_{i,9} \cdot \text{in} \cdot \text{lbf}$

Calculate Stresses

$i := 1 .. \text{rows}(\text{forces}) \cdot 2$

$_{i,j} := \frac{Fx_i}{\text{Area}} + \frac{My_i \cdot cz_j}{Iy} - \frac{Mz_i \cdot cy_j}{Iz}$ $\quad \max(\ ) = \mathbf{2249.404} \cdot \text{psi}$ *Normal is direct axial plus bending*

$=v_i := \sqrt{\left(\frac{Fy_i}{\text{Area}}\right)^2 + \left(\frac{Fz_i}{\text{Area}}\right)^2}$ $\quad \max(=v) = \mathbf{104} \cdot \text{psi}$ *Shear due to transverse loading*

$=t := T \cdot \frac{r}{J}$ $\quad \max(=t) = \mathbf{1821} \cdot \text{psi}$ *Shear due to torsion*

$= := =v + =t$ $\quad \max(=) = \mathbf{1890} \cdot \text{psi}$ *Combined shear*

$p1_{i,j} := \frac{_{i,j}}{2} + \left[\left(\frac{_{i,j}}{2}\right)^2 + (=_i)^2\right]^{\frac{1}{2}}$ $\quad \max(\ p1) = \mathbf{3201}\,\text{psi}$ *Principal Stresses*

$\min(\ p1) = \mathbf{0.000}\,\text{psi}$

$p2_{i,j} := \frac{_{i,j}}{2} - \left[\left(\frac{_{i,j}}{2}\right)^2 + (=_i)^2\right]^{\frac{1}{2}}$ $\quad \max(\ p2) = \mathbf{0.000}\,\text{psi}$

$\min(\ p2) = -\mathbf{3732}\,\text{psi}$

$RES_i := \sqrt{(Fx_i)^2 + (Fy_i)^2 + (Fz_i)^2}$ $\quad \max(RES) = \mathbf{162.718} \cdot \text{lbf}$

$$\text{Landing max} := \max\left(\max\left(\overrightarrow{|\ p1|}\right), \max\left(\overrightarrow{|\ p2|}\right)\right)$$

$$f_{tu} := \text{Landing max} = \mathbf{3732} \cdot \text{psi}$$ *Maximum Principal*

$$vm_{i,j} := \sqrt{(\ p1_{i,j})^2 + (\ p2_{i,j})^2 - \ p1_{i,j} \cdot \ p2_{i,j}}$$

$$f_{ty} := \max(\ vm) = \mathbf{4228} \cdot \text{psi}$$ *Von-Mises Stress*

$$=max_{i,j} := \sqrt{\frac{1}{4} \cdot (\ _{i,j})^2 + (=_i)^2}$$

$$f_{su} := \max(=max) = \mathbf{2296} \cdot \text{psi}$$ *Maximum Shear*

$$\text{output} := \text{augment}\left(\text{cases}, \frac{p1}{psi}, \frac{p2}{psi}\right)$$

$$\text{WRITEPRN}(\textbf{"bridgebeamout-Landing.txt"}) := \text{output}$$

Margins of Safety, Minimum Cross Section w/Bearing Thru Hole

$$MS_{tu} := \left(\frac{F_{tu} \cdot \beta_{tu}}{FS_u \cdot f_{tu}}\right) - \mathbf{1} = \mathbf{8.00}$$ ***Tensile Ultimate***

$$MS_{ty} := \left(\frac{F_{ty} \cdot \beta_{ty}}{FS_y \cdot f_{ty}}\right) - \mathbf{1} = \mathbf{10.56}$$ ***Tensile Yield***

$$MS_{su} := \left(\frac{F_{su} \cdot \beta_{tu}}{FS_u \cdot f_{su}}\right) - \mathbf{1} = \mathbf{7.62}$$ ***Shear Ultimate***

On-Orbit Inertial Steady State Combined Loads, Min. Cross Section w/Bearing Thru Hole

Read formatted Naspost output. Naspost file called PASBridgeBeam-SortOn-Orbit.nas.lis

$forces := READPRN(\text{"beams-Onorbit.txt"})$

$i := 1 .. rows(forces)$ $\quad cases_i := forces_{i,2}$ $\quad cases_{i+rows(forces)} := forces_{i,2}$

1	2	3	4	5	6	7	8	9	10	11	12
ID	SUBCASE	MOM-A-1	MOM-A-2	SHEAR-A-1	SHEAR-A-2	AXIAL-A	TOT-TORQ-A	MOM-B-1	MOM-B-2	SHEAR-B-1	SHEAR-B-2

Load data from first end of beam

$Fx_i := forces_{i,7} \cdot lbf$ $\quad Fy_i := forces_{i,5} \cdot lbf$ $\quad Fz_i := forces_{i,6} \cdot lbf$

$T_i := forces_{i,8} \cdot in \cdot lbf$ $\quad My_i := -forces_{i,4} \cdot in \cdot lbf$ $\quad Mz_i := forces_{i,3} \cdot in \cdot lbf$

Load data from second end of beam

$Fx_{i+rows(forces)} := forces_{i,7} \cdot lbf$ $\quad Fy_{i+rows(forces)} := forces_{i,11} \cdot lbf$ $\quad Fz_{i+rows(forces)} := forces_{i,12} \cdot lbf$

$T_{i+rows(forces)} := forces_{i,8} \cdot in \cdot lbf$ $\quad My_{i+rows(forces)} := -forces_{i,10} \cdot in \cdot lbf$ $\quad Mz_{i+rows(forces)} := forces_{i,9} \cdot in \cdot lbf$

Calculate Stresses

$i := 1 .. rows(forces) \cdot 2$ *Normal is direct axial plus bending*

$$_{i,j} := \frac{|Fx_i|}{Area} + \frac{|My_i| \cdot cz_j}{Iy} + \frac{|Mz_i| \cdot cy_j}{Iz} \qquad _{i,j} := \frac{Fx_i}{Area} + \frac{My_i \cdot cz_j}{Iy} - \frac{Mz_i \cdot cy_j}{Iz}$$

$max(\ ) = 28825.467 \cdot psi$

$$=v_i := \sqrt{\left(\frac{Fy_i}{Area}\right)^2 + \left(\frac{Fz_i}{Area}\right)^2}$$

$max(=v) = 1046 \cdot psi$ *Shear due to transverse loading*

$$=t := T \cdot \frac{r}{J}$$

$max(=t) = 3164 \cdot psi$ *Shear due to torsion*

$=:= =v + =t$

$max(=) = 4175 \cdot psi$ *Combined shear*

$$p1_{i,j} := \frac{_{i,j}}{2} + \left[\left(\frac{_{i,j}}{2}\right)^2 + (=_i)^2\right]^{\frac{1}{2}}$$

$max(\ p1) = 28892\ psi$ *Principal Stresses*

$min(\ p1) = 0.000\ psi$

$$p2_{i,j} := \frac{_{i,j}}{2} - \left[\left(\frac{_{i,j}}{2}\right)^2 + (=_i)^2\right]^{\frac{1}{2}}$$

$max(\ p2) = 0.000\ psi$

$min(\ p2) = -37847\ psi$

$$RES_i := \sqrt{(Fx_i)^2 + (Fy_i)^2 + (Fz_i)^2}$$

$max(RES) = 1644 \cdot lbf$

$OnOrbit_max := \max\left(\max\left(\overrightarrow{|p1|}\right), \max\left(\overrightarrow{|p2|}\right)\right)$ $\quad f_{tu} := OnOrbit_max = \mathbf{37847} \cdot psi$ *Maximum Principal*

$vm_{i,j} := \sqrt{(p1_{i,j})^2 + (p2_{i,j})^2 - p1_{i,j} \cdot p2_{i,j}}$ $\quad f_{ty} := \max(vm) = \mathbf{37873} \cdot psi$ *Von-Mises Stress*

$\tau max_{i,j} := \sqrt{\frac{1}{4} \cdot (\ _{i,j})^2 + (\tau_{i,j})^2}$ $\quad f_{su} := \max(\tau max) = \mathbf{18949} \cdot psi$ *Maximum shear*

$output := augment\left(cases, \frac{p1}{psi}, \frac{p2}{psi}\right)$ $\quad WRITEPRN(\text{"bridgebeamout-On-Orbit.txt"}) := output$

Margins of Safety, Inertial Steady State Combined, Min Cross Section w/Bearing Thru Ho

$MS_{tu} := \left(\frac{F_{tu} \cdot \beta_{tu}}{FS_u \cdot f_{tu}}\right) - \mathbf{1} = \mathbf{-0.11}$ ***Tensile Ultimate***

Note: Because of the negative margin for Tensile Ultimate, a Plastic Bending check (Section 4.6.7) and a Buckling check (Section 4.6.8) will be performed.

$MS_{ty} := \left(\frac{F_{ty} \cdot \beta_{ty}}{FS_y \cdot f_{ty}}\right) - \mathbf{1} = \mathbf{0.29}$ ***Tensile Yield***

$MS_{su} := \left(\frac{F_{su} \cdot \beta_{tu}}{FS_u \cdot f_{su}}\right) - \mathbf{1} = \mathbf{0.04}$ ***Shear Ultimate***

On-Orbit Steady State Loads, Minimum Cross Section w/Bearing Thru Hole

Read formatted Naspost output. Naspost file called PASBridgeBeam-SortOn-OrbitSS.nas.lis

forces2 := READPRN("**beams-OnorbitSS.txt**")

$i := 1 .. \text{rows}(\text{forces})$ $\qquad$ $\text{cases}_i := \text{forces}_{i,2}$

1	2	3	4	5	6	7	8	9	10	11	12
ID	SUBCASE	MOM-A-1	MOM-A-2	SHEAR-A-1	SHEAR-A-2	AXIAL-A	TOT-TORQ-A	MOM-B-1	MOM-B-2	SHEAR-B-1	SHEAR-B-2

Data is modified in the below embedded excel file. Result is for the Max stress - Steady State Stress

forces3 := Sort Excel $\qquad$ $\text{cases}_{i+\text{rows}(\text{forces3})} := \text{forces3}_{i,2}$

(forces forces2)

Load data from first end of beam

$Fx_i := \text{forces3}_{i,7} \cdot \text{lbf}$ $\qquad$ $Fy_i := \text{forces3}_{i,5} \cdot \text{lbf}$ $\qquad$ $Fz_i := \text{forces3}_{i,6} \cdot \text{lbf}$

$T_i := \text{forces3}_{i,8} \cdot \text{in} \cdot \text{lbf}$ $\qquad$ $My_i := -\text{forces3}_{i,4} \cdot \text{in} \cdot \text{lbf}$ $\qquad$ $Mz_i := \text{forces3}_{i,3} \cdot \text{in} \cdot \text{lbf}$

Load data from second end of beam

$Fx_{i+\text{rows}(\text{forces3})} := \text{forces3}_{i,7} \cdot \text{lbf}$ $\qquad$ $Fy_{i+\text{rows}(\text{forces3})} := \text{forces3}_{i,11} \cdot \text{lbf}$ $\qquad$ $Fz_{i+\text{rows}(\text{forces3})} := \text{forces3}_{i,12} \cdot \text{lbf}$

$T_{i+\text{rows}(\text{forces3})} := \text{forces3}_{i,8} \cdot \text{in} \cdot \text{lbf}$ $\qquad$ $My_{i+\text{rows}(\text{forces3})} := -\text{forces3}_{i,10} \cdot \text{in} \cdot \text{lbf}$ $\qquad$ $Mz_{i+\text{rows}(\text{forces3})} := \text{forces3}_{i,9} \cdot \text{in} \cdot \text{lbf}$

Calculate Stresses

$i := 1 .. \text{rows}(\text{forces3}) \cdot 2$

$$_{i,j} := \frac{Fx_i}{\text{Area}} + \frac{My_i \cdot cz_j}{Iy} - \frac{Mz_i \cdot cy_j}{Iz}$$ $\qquad$ $\max(\ ) = \mathbf{1047.210} \cdot \text{psi}$ $\qquad$ *Normal is direct axial plus bending*

$$=v_i := \sqrt{\left(\frac{Fy_i}{\text{Area}}\right)^2 + \left(\frac{Fz_i}{\text{Area}}\right)^2}$$ $\qquad$ $\max(=v) = \mathbf{62} \cdot \text{psi}$ $\qquad$ *Shear due to transverse loading*

$$=t := T \cdot \frac{r}{J}$$ $\qquad$ $\max(=t) = \mathbf{1864} \cdot \text{psi}$ $\qquad$ *Shear due to torsion*

$$= := =v + =t$$ $\qquad$ $\max(=) = \mathbf{1890} \cdot \text{psi}$ $\qquad$ *Combined shear*

$$p1_{i,j} := \frac{_{i,j}}{2} + \left[\left(\frac{_{i,j}}{2}\right)^2 + (=)^2\right]^{\frac{1}{2}}$$ $\qquad$ $\max(\ p1) = \mathbf{2317}\,\text{psi}$ $\qquad$ *Principal Stresses*

$\min(\ p1) = \mathbf{0.000}\,\text{psi}$

$$p2_{i,j} := \frac{\ _{i,j}}{2} - \left[\left(\frac{\ _{i,j}}{2}\right)^2 + (\tau_{ij})^2\right]^{\frac{1}{2}}$$

$\max(\ p2) = \mathbf{0.000}\,\text{psi}$

$\min(\ p2) = -\mathbf{2351}\,\text{psi}$

$\text{OnOrbitd}\ \max := \max\left(\max\left(\overrightarrow{|\ p1|}\right), \max\left(\overrightarrow{|\ p2|}\right)\right)$ $\quad f_{tu} := \text{OnOrbitd}\ \max = \mathbf{2351}\cdot\text{psi}$ *Maximum Principal*

$$vm_{i,j} := \sqrt{(\ p1_{i,j})^2 + (\ p2_{i,j})^2 - \ p1_{i,j}\cdot\ p2_{i,j}}$$

$f_{ty} := \max(\ vm) = \mathbf{3346}\cdot\text{psi}$ *Von-Mises Stress*

$$\tau\max_{i,j} := \sqrt{\frac{1}{4}\cdot(\ _{i,j})^2 + (\tau_{ij})^2}$$

$f_{su} := \max(\tau\max) = \mathbf{1921}\cdot\text{psi}$ *Maximum Shear*

$\text{output} := \text{augment}\left(\text{cases}, \frac{p1}{\text{psi}}, \frac{p2}{\text{psi}}\right)$ $\qquad$ $\text{WRITEPRN}(\textbf{"bridgebeamout-Flight.txt"}) := \text{output}$

Margins of Safety, On-Orbit Steady State Loads, Min Cross Section w/Bearing Thru Hole

$$MS_{tu} := \left(\frac{F_{tu}\cdot\beta_{tu}}{FS_u\cdot f_{tu}}\right) - \mathbf{1} = \mathbf{13.28}$$

Tensile Ultimate

$$MS_{ty} := \left(\frac{F_{ty}\cdot\beta_{ty}}{FS_y\cdot f_{ty}}\right) - \mathbf{1} = \mathbf{13.61}$$

Tensile Yield

$$MS_{su} := \left(\frac{F_{su}\cdot\beta_{tu}}{FS_u\cdot f_{su}}\right) - \mathbf{1} = \mathbf{9.30}$$

Shear Ultimate

4.6.7 Plastic Bending, Inelastic Bending, Ultimate Allowable Bending Stress

At Ultimate Design Loads there can be no rupture/failure from tension or local crippling from compression. Stresses are in the inelastic range, above the porportional limit. Once a structure has exceeded the proportional limit of a material, the simplified elastic stress distribution method (Mc/I) is usually too conservative and will predict maximum fiber stresses that are too high for practical design use or cause a weight penalty.

For materials fully capable of plastic behavior, excluding local instability, failure of a member in bending will occur above the proportional limit of the material in the inelastic range of stresses. A redistribution of load (a nonlinear variation of stress) will occur such that the extreme fiber stresses of an actual structure in bending will begin to yield, while interior points of that structure will experience increases in stress. The member will collapse when the maximum moment equals the *plastic moment* which is developed when the stress throughout the section becomes equal to the tensile yield strength (plastic yielding throughout the section).

To predict the ultimate failure of a member in bending in the inelastic range of stresses, we use the Ultimate Allowable Bending Stress (F_{bu}) in place of F_{tu} in the Margin of Safety calculation.

$$\mathbf{MS_{bu} := (F_{bu} * \gamma_{tu}) / (FS_u * f_b) - 1}$$

The On-Orbit Inertial Steady State Combined Loads, Maximum Principal Stress, at the minimum cross section resulted in a negative Margin of Safety for Tensile Ultimate. Therefore that stress and cross sectionn will now be checked using the Ultimate Plastic Bending Allowable.

Factors of Safety

$FS_u := \mathbf{2.0}$

$FS_y := \mathbf{1.25}$

Materials and Temperature

Material Allowables

AL ALY, 7050-T7451, BMS-7-323-C, Plate, 37.575 x 3.650 x 2.070, A

$F_{tu} := \mathbf{73000} \cdot psi$ $F_{ty} := \mathbf{63000} \cdot psi$ $F_{cy} := \mathbf{61000} \cdot psi$ $F_{su} := \mathbf{43000} \cdot psi$

Temperature Degradation

$\beta_{tu} := \mathbf{0.92}$ $\beta_{ty} := \mathbf{0.97}$

Section Properties

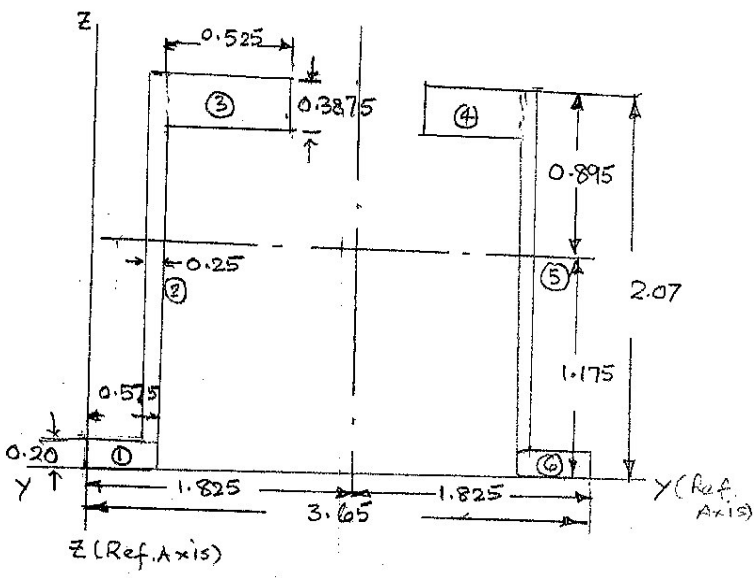

Figure 4.6.7-1Section Dimensions

Section Properties About Y Axis

Element i	b_i	h_i	A_i	z'_i	$A_i z'_i$	z_i	$A_i z^2_i$	I_{0yi}
1	0.5750	0.2000	0.11500	0.1000	0.01150	-1.0754	0.13301	0.00038
2	0.2500	1.8700	0.46750	1.1350	0.53061	-0.0404	0.00076	0.13623
3	0.5250	0.3875	0.20344	1.8763	0.38171	0.7009	0.09993	0.00255
4	0.5250	0.3875	0.20344	1.8763	0.38171	0.7009	0.09993	0.00255
5	0.2500	1.8700	0.46750	1.1350	0.53061	-0.0404	0.00076	0.13623
6	0.5750	0.2000	0.11500	0.1000	0.01150	-1.0754	0.13301	0.00038
Sum			1.57188		1.84764		0.46740	0.27832

Where
i = element number
b = breadth, parallel to the axis of bending
h = height, value of function f() at any point
z' = distance from reference axis to element centroid
Zbar = distance from reference axis to section centroid
Zbar = ? $A_i z'_i$ / ? A_i
z_i = distance from neutral axis to element centroid
$z_i = z'_i$ - Zbar
$I_{0yi} = bh^3/12$ for a rectangular element
I_y = ? $A_i z^2_i$ + ? I_{0yi} (Second Moment of Area)

Zbar = 1.1754 inches

I_y = 0.74572 inches^4

$Q_{yBottom}$ - First Moment of Area

i	b_i	h_i	A_i	z'_i	z_i	$A_i z_i$	$A_i z^2_i$	I_{0yi}
1	0.5750	0.2000	0.11500	0.1000	-1.0754	-0.12368	0.13301	0.00038
2	0.2500	0.9750	0.24375	0.6877	-0.4877	-0.11889	0.05799	0.01931
3	0.2500	0.9750	0.24375	0.6877	-0.4877	-0.11889	0.05799	0.01931
4	0.5750	0.2000	0.11500	0.1000	-1.0754	-0.12368	0.13301	0.00038
Sum						-0.48512	0.38198	0.03939

$Q_{yBottom}$ = **0.4851** **inches^3**

$I_{yBottom}$ = **0.42137** **inches^4**

$Q_y = \Sigma A_i z_i$

Q_{yTop} - First Moment of Area

i	b_i	h_i	A_i	z'_i	z_i	$A_i z_i$	$A_i z^2_i$	I_{0yi}
1	0.2500	0.8946	0.22365	1.6227	0.4473	0.10003	0.04474	0.01492
2	0.5250	0.3875	0.20344	1.8763	0.7008	0.14257	0.09992	0.00255
3	0.5250	0.3875	0.20344	1.8763	0.7008	0.14257	0.09992	0.00255
4	0.2500	0.8946	0.22365	1.6227	0.4473	0.10003	0.04474	0.01492
Sum						0.48520	0.28931	0.03492

Q_{yTop} = **0.4852** **inches^3**

I_{yTop} = **0.32423** **inches^4**

$c_{zBottom} := \mathbf{1.1754} \cdot in$

$c_{zTop} := \mathbf{0.89460} \cdot in$

C_z is the Distance from the Neutral Axis to the Extreme Fiber

$I_{yBottom} := \mathbf{0.42137} \cdot in^4$

$I_{yTop} := \mathbf{0.32423} \cdot in^4$

$I_{yy} := \mathbf{.7457} \cdot in^4$

I is the Moment of Inertia of an Area (Second Moment of an Area)

$Q_{yBottom} := \mathbf{0.4851} \cdot in^3$

$Q_{yTop} := \mathbf{0.4852} \cdot in^3$

Q is the Static First Moment, About the Neutral Axis, of the Cross-Sectional Area on the Tension Side of the Neutral Axis

Z := Q is the Plastic Section Moduli (from Roark)

$Zbar := \mathbf{1.1754} \cdot in$

Zbar is the Distance From the Neutral Axis to the Centroid of the Tensile Part of the Section (Rectangle Elements (i))

NASTRAN Section Properties

$Iz := 2.729 \cdot in^4$ $\quad Iy := .7457 \cdot in^4$ $\quad J := 0.0442752 \cdot in^4$ $\quad Area := 1.572 \cdot in^2$

$cz := .895 \cdot in$ $\quad cy := 1.825 \cdot in$ $\quad r := 1.91919 \cdot in$

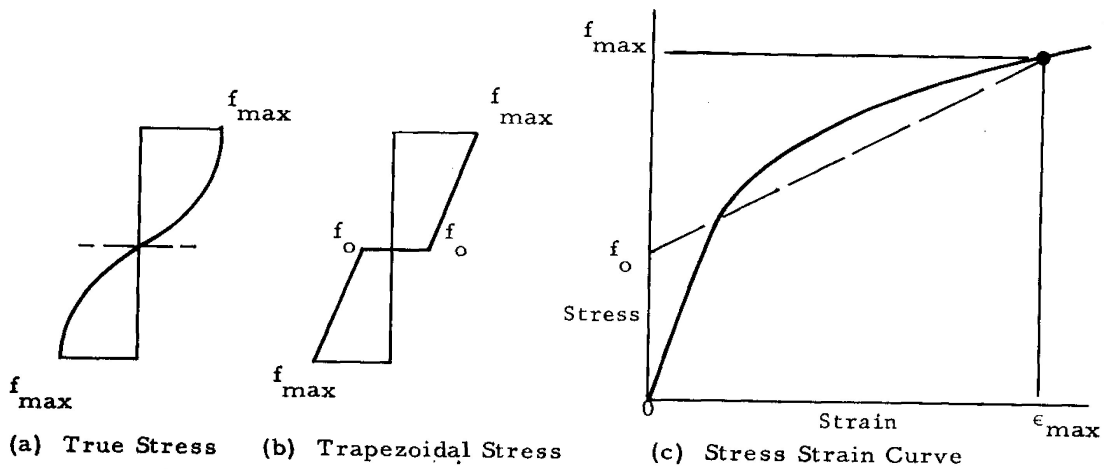

Plastic Bending Allowable For the Bottom Portion of the Flange

$K := \frac{Q_{yBottom}}{\frac{I_{yBottom}}{c_{zBottom}}} = \mathbf{1.35}$

K is the Beam Section Shape Factor (also shown as SF in Roark). Varies between 1.0 - 2.0

$f_m := F_{tu} = \mathbf{73000}\,psi$

f_m is the Maximum Stress Permitted in the Outer most Fiber, (F_{ty} =< f_m =< F_{tu}) but usually f_m ~= F_{tu}

$f_o := \min(F_{ty}, F_{cy})$

$f_o = \mathbf{61000}\,psi$

f_o is the Fictitious Stress at the Neutral Axis Assuming Zero Strain. Can be Approximated as the Lower of F_{cy} or F_{ty}

$F_{bu} := f_m + f_o \cdot (K - \mathbf{1})$

$F_{bu} = \mathbf{94544}\,psi$

F_{bu} is the Fictitious Failing Bending Stress, Ultimate Modulus of Rupture, Ultimate Allowable Bending Stress.

$f_{tu} := \mathbf{37847} \cdot psi$

Maximum Principal Stress

$MS_{bu} := \frac{F_{bu} \cdot \beta_{tu}}{FS_u \cdot f_{tu}} - \mathbf{1} = \mathbf{0.15}$

...Margin of Safety for Plastic Bending Bottom

Plastic Bending Allowable For the Top Portion of the Flange

$K := \frac{Q_{yTop}}{\frac{I_{yTop}}{c_{zTop}}} = \mathbf{1.34}$

K is the Beam Section Shape Factor (also shown as SF in Roark). Varies between 1.0 - 2.0

$F_{bu} := f_m + f_o \cdot (K - \mathbf{1})$

$F_{bu} = \mathbf{93663}\,psi$

F_{bu} is the Fictitious Failing Bending Stress, Ultimate Modulus of Rupture, Ultimate Allowable Bending Stress.

$MS_{bu} := \frac{F_{bu} \cdot \beta_{tu}}{FS_u \cdot f_{tu}} - \mathbf{1} = \mathbf{0.14}$

...Margin of Safety for Plastic Bending Top

4.6.8 Bucking of PAS Bridge Beam Flanges

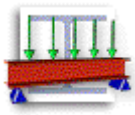

Table 34 Formulas for Elastic Stability of Bars, Rings and Beams

Case 11 Straight Uniform Beam of Narrow Rectangular Section Under Pure Bending

Straight uniform beam of narrow rectangular section under pure bending

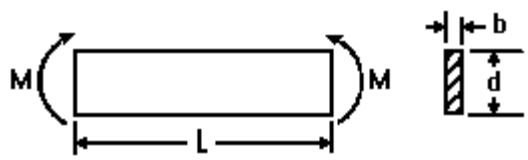

Notation file Provides a description of Table 34 and the notation used.

$E_c := 10.6 \cdot 10^6 \cdot psi$ *Modulus of Elasticity*

$G := 3.9 \cdot 10^6 \cdot psi$ *Modulus of Rigidity*

$d := 0.200 \cdot in$ *Height of Cross-Sectional Rectangle*

$b := 0.575 \cdot in$ *Width of Cross-Sectional Rectangle Always Parallel to the Axis of Bending*

$L := \frac{2}{3} \cdot 25.450 \cdot in = 16.97 in$ *Beam Length:*

$\beta_{tu} := 0.92$ $\beta_{ty} := 0.97$ *Temperature Degradation*

$FS_u := 2.00$ $FS_y := 1.25$ *Factor of Safety*

For ends held vertical, but not fixed in a horizontal plane, the critical bending is

$$M'_{ss} := \frac{u \cdot b^3 \cdot d \cdot \sqrt{E_c \cdot G \cdot \left(1 - .063 \cdot \frac{b}{d}\right)}}{6 \cdot L} = 6827 \cdot in \cdot lbf$$

Maximum Allowed Moment Assuming Simply Supported

For ends held vertical and fixed in a horizontal plane, the critical bending is

$$M'_{ff} := \frac{2 \cdot u \cdot b^3 \cdot d \cdot \sqrt{E_c \cdot G \cdot \left(1 - .063 \cdot \frac{b}{d}\right)}}{6 \cdot L} = 13654 \cdot in \cdot lbf$$

Maximum Allowed Moment Assuming Fixed

Margin of Safety for Buckling

$f_{tu} := 37847 \cdot psi$ *Maximum Principal Stress*

$I_{bd} := \frac{1}{12} \cdot b \cdot d^3 = 383.333 \times 10^{-6} in^4 \; 4.000$ *Second Moment of Area for Flange bd*

$c_{bd} := \frac{d}{2} = 0.10 in$ *Distance to Centroid of bd*

$m_{yApplied} := f_{tu} \cdot \frac{I_{bd}}{c_{bd}} = 145.08 \cdot in \cdot lbf$ *Applied Moment Based on f_{tu}*

$MS_{BucklingU} := M'_{ss} \cdot \frac{\beta_{tu}}{FS_u \cdot m_{yApplied}} - 1 = 21$ ***...Margin of Safety for Flange Bucking, SS***

$MS_{BucklingU} := M'_{ff} \cdot \frac{\beta_{tu}}{FS_u \cdot m_{yApplied}} - 1 = 42$ ***...Margin of Safety for Flange Bucking, Fixed***

4.7 Bridge Flat Bearing

Prepared By	Name	Date		File Name
	H. Carter	02/28/03		flat bearing.mcd
Checked By			**Engineering and Science Contract Group** *Structural Analysis Section*	Draw ing No. SEG39135825
Title	Bridge Flat Bearing			

4.7 Bridge Flat Bearing, SDG39135825

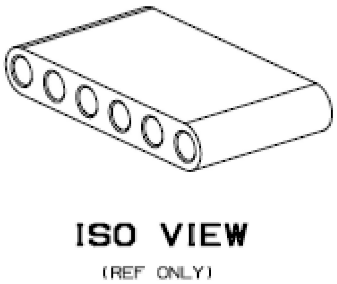

Bridge Flat Bearing, is made of CRES15-5 PH H1025 and is good by engineering judgement, based upon the compressive loads and the significant cross section.

4.8 Bridge Pin

4.8 Bridge Pin, AMS Passive PAS Assy, SDG39135826-001

Minimum Margins of Safety

Table 4.8-1 Minimum Margin Of Safety Summary

Part/Dwg Number	Part Name/ Description	Material Heat Treatment	Critical Load Condition	Failure Mode	Margin of Safety	Reference Page
SDG39135826-001	Bridge Pin	CRES A286 AMS 5737	Landing	Shear Ultimate	34.36	4.8-8

Notes:

1. Factors of Safety are 2.0 for Ultimate and 1.25 for Yield.
2. 64 Liftoff, On-Orbit, and Landing load cases, combined with the preload of the capture bar, were analyzed.
3. Boundary conditions are at the PAS Guide Pins and PAS handle locations.

Structural Description

Pin has a threaded end for retention. Primary loads are from the capture bar resulting in double shear on the pin. No moment.

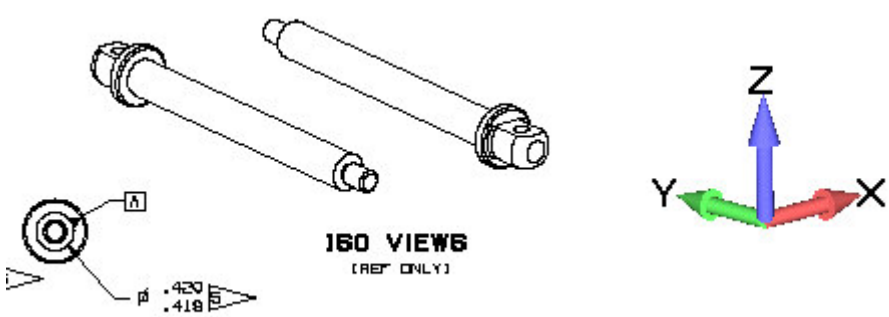

Figure 4.8-1 Bridge Pin, AMS Passive PAS Assy, SDG39135826-001

Section Properties

$dia := \mathbf{.420} \cdot in$ $\qquad Area := \beta \cdot \left(\frac{dia}{2}\right)^2$ $\qquad Area = \mathbf{0.139} \cdot in^2$

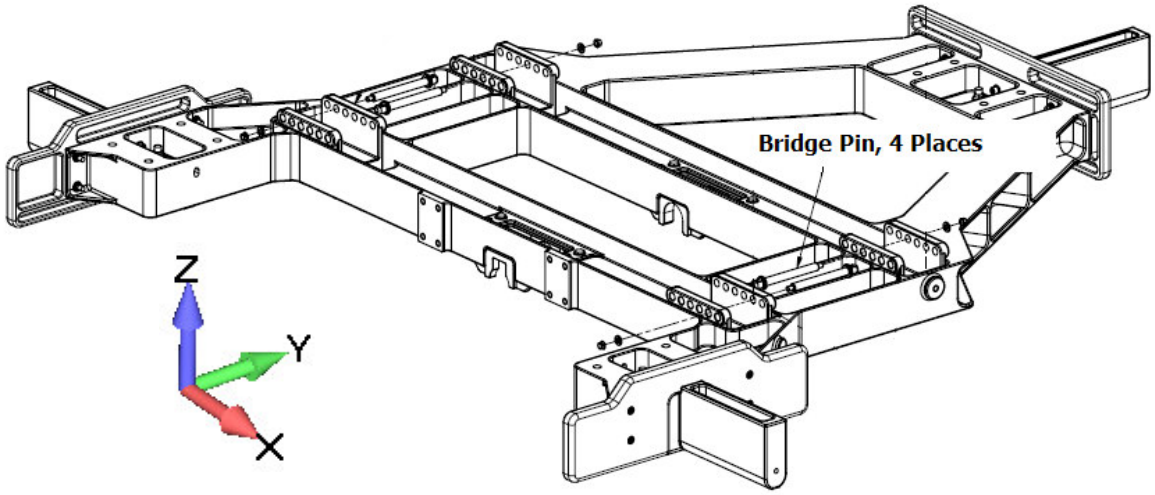

Figure 4.8-2 Bridge Pin in Relation to PAS Base Assy

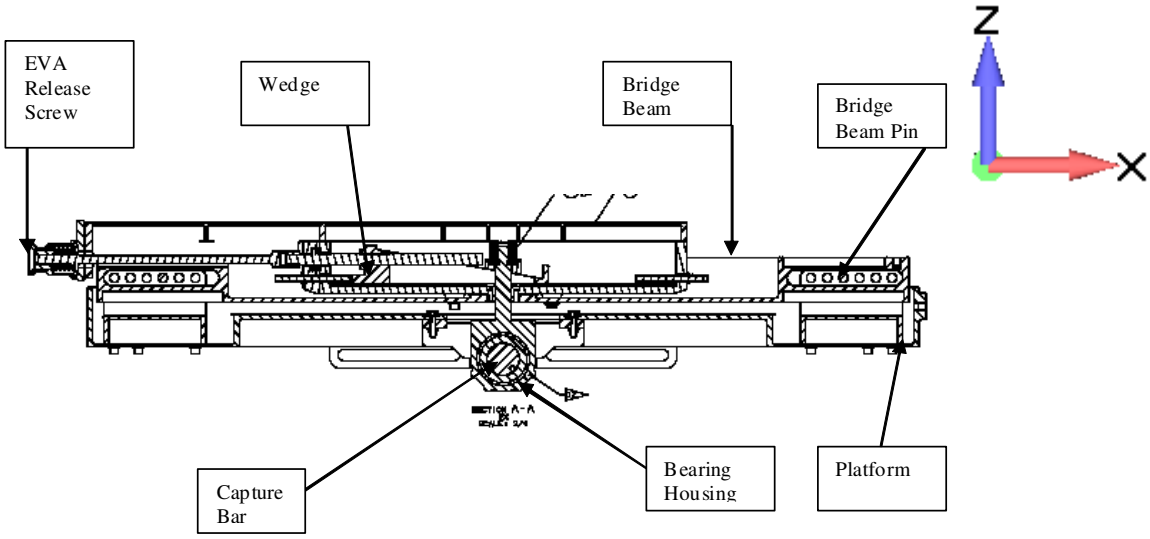

Figure 4.8-3 Cross Section View of Bridge Beam and Platform

Summary of Load Conditions

The Liftoff, On-Orbit, and Landing loads from the Bridge Beam (section 4.6) were used for the stress analysis of the Bridge Pin.

Factors of Safety

FSu := **2.0** *Ultimate* FSy := **1.25** *Yield*

Materials and Temperature

Material Allowables

CRES A286, AMS 5737, .705 X 4.620 LG, Passivate *Table 6.2.1.0(b) MMPDS-03*

Ftu := **140000**·psi Fty := **95000**·psi Fsu := Ftu·**0.60** = **84000.00**psi

Temperature Degradation

u := **.96** *a_{tu} = a_{ty} = a at 151 ºF Thermal Reduction Coefficient*

Finite Element Model

The same finite element model was used for the Bridge Pin, Bridge Beam, PAS Base, Guide Pins, Aft and Vertex Brackets.
For a detailed description of the model see Section 4.1.4.
For a detailed description of the model checks, see Section 4.1.5.

Liftoff/Flight Loads

From the Bridge Beam (Section 4.6)

Read formatted Naspost output. Naspost file called PASBridgeBeam-SortFlight.nas.lis

$forces := READPRN(\text{"beams-Flight.txt"})$ $\quad ORIGIN := 1$ $\quad i := 1..rows(forces)$ $\quad cases_i := forces_{i,2}$

Load data from first end of beam

$My_i := -forces_{i,4} \cdot in \cdot lbf$ $\quad Mz_i := forces_{i,3} \cdot in \cdot lbf$ $\quad T_i := forces_{i,8} \cdot in \cdot lbf$ $\quad cases_{i+rows(forces)} := forces_{i,2}$

$Fy_i := forces_{i,5} \cdot lbf$ $\quad Fz_i := forces_{i,6} \cdot lbf$ $\quad Fx_i := forces_{i,7} \cdot lbf$

Load data from second end of beam

$My_{i+rows(forces)} := -forces_{i,10} \cdot in \cdot lbf$ $\quad Mz_{i+rows(forces)} := forces_{i,9} \cdot in \cdot lbf$ $\quad T_{i+rows(forces)} := forces_{i,8} \cdot in \cdot lbf$

$Fy_{i+rows(forces)} := forces_{i,11} \cdot lbf$ $\quad Fz_{i+rows(forces)} := forces_{i,12} \cdot lbf$ $\quad Fx_{i+rows(forces)} := forces_{i,7} \cdot lbf$

$i := 1..rows(forces) \cdot 2$

Detailed Stress Analysis

Bridge Pin (circular diameter) is Loaded in Double Shear. No Moment.

$_i := \sqrt{\left(\frac{Fz_i}{Area}\right)^2}$ $\quad max(\ ) = 505.25\,psi$ $\quad$ *Transverse Shear*

$=p_{i,1} := \left[(\ _i)^2\right]^{\frac{1}{2}}$ $\quad max(=p) = 505.25\,psi$ $\quad$ *Principal Stresses*

$=p_{i,2} := -\left[(\ _i)^2\right]^{\frac{1}{2}}$ $\quad max(=p) = 505.25\,psi$ $\quad max\left(\overrightarrow{|=p|}\right) = 505.25\,psi$ $\quad$ *Maximum Principal*

$=vm_i := \sqrt{(=p_{i,1})^2 + (=p_{i,2})^2 - =p_{i,1} \cdot =p_{i,2}}$ $\quad max(=vm) = 875.13\,psi$ $\quad$ *Maximum Von-Mises*

$max_i := \sqrt{(\ _i)^2}$ $\quad max(\ max) = 505.25\,psi$ $\quad$ *Maximum Shear*

Margins of Safety for Liftoff/Flight Loads

$$MStu := \left(\frac{Ftu \cdot u}{FSu \cdot \max\left(\overrightarrow{|=p|}\right)}\right) - 1$$

MStu = **132.00** ***Tensile Ultimate***

$$MSty := \left(\frac{Fty \cdot u}{FSy \cdot \max(=vm)}\right) - 1$$

MSty = **82.37** ***Tensile Yield***

$$MSsu := \left(\frac{Fsu \cdot u}{FSu \cdot \max(\ \ \max)}\right) - 1$$

MSsu = **78.80** ***Shear Ultimate***

Landing Loads

From the Bridge Beam (Section 4.6)

Read formatted Naspost output. Naspost file called PASBridgeBeam-SortLanding.nas.lis

$forces := READPRN(\text{"beams-Landing.txt"})$ $\quad i := 1 .. rows(forces)$ $\quad cases_i := forces_{i,2}$

Load data from first end of beam

$My_i := -forces_{i,4} \cdot in \cdot lbf$ $\quad Mz_i := forces_{i,3} \cdot in \cdot lbf$ $\quad T_i := forces_{i,8} \cdot in \cdot lbf$ $\quad cases_{i+rows(forces)} := forces_{i,2}$

$Fy_i := forces_{i,5} \cdot lbf$ $\quad Fz_i := forces_{i,6} \cdot lbf$ $\quad Fx_i := forces_{i,7} \cdot lbf$

Load data from second end of beam

$My_{i+rows(forces)} := -forces_{i,10} \cdot in \cdot lbf$ $\quad Mz_{i+rows(forces)} := forces_{i,9} \cdot in \cdot lbf$ $\quad T_{i+rows(forces)} := forces_{i,8} \cdot in \cdot lbf$

$Fy_{i+rows(forces)} := forces_{i,11} \cdot lbf$ $\quad Fz_{i+rows(forces)} := forces_{i,12} \cdot lbf$ $\quad Fx_{i+rows(forces)} := forces_{i,7} \cdot lbf$

$i := 1 .. rows(forces) \cdot 2$

Detailed Stress Analysis

Bridge Pin (circular diameter) is Loaded in Double Shear. No Moment.

$_i := \sqrt{\left(\frac{Fz_i}{Area}\right)^2}$ $\quad max(\ ) = 1140.43\,psi$ $\quad$ *Transverse Shear*

$=p_{i,1} := \left[(\ _i)^2\right]^{\frac{1}{2}}$ $\quad max(=p) = 1140.43\,psi$ $\quad$ *Principal Stresses*

$=p_{i,2} := -\left[(\ _i)^2\right]^{\frac{1}{2}}$ $\quad max(=p) = 1140.43\,psi$ $\quad max\left(\overrightarrow{|=p|}\right) = 1140.43\,psi$ $\quad$ *Maximum Principal*

$=vm_i := \sqrt{(=p_{i,1})^2 + (=p_{i,2})^2 - =p_{i,1} \cdot =p_{i,2}}$ $\quad max(=vm) = 1975.28\,psi$ $\quad$ *Maximum Von-Mises*

$max_i := \sqrt{(\ _i)^2}$ $\quad max(\ max) = 1140.43\,psi$ $\quad$ *Maximum Shear*

Margins of Safety for the Landing Loads

$$MStu := \left(\frac{Ftu \cdot u}{FSu \cdot \max\left(\overrightarrow{|=p|}\right)}\right) - 1$$ MStu = **57.93** ***Tensile Ultimate***

$$MSty := \left(\frac{Fty \cdot u}{FSy \cdot \max(=vm)}\right) - 1$$ MSty = **35.94** ***Tensile Yield***

$$MSsu := \left(\frac{Fsu \cdot u}{FSu \cdot \max(\ \ \max)}\right) - 1$$ MSsu = **34.36** ***Shear Ultimate***

On-Orbit Inertial and Steady State Combined Loads

From the Bridge Beam (Section 4.6)

Read formatted Naspost output. Naspost file called PASBridgeBeam-SortOn-Orbit.nas.lis

$forces := READPRN(\text{"beams-Onorbit.txt"})$

$i := 1 .. rows(forces)$ $\quad cases_i := forces_{i,2}$ $\quad cases_{i+rows(forces)} := forces_{i,2}$

Load data from first end of beam

$My_i := -forces_{i,4} \cdot in \cdot lbf$ $\quad Mz_i := forces_{i,3} \cdot in \cdot lbf$ $\quad T_i := forces_{i,8} \cdot in \cdot lbf$ $\quad id_i := forces_{i,1}$

$Fy_i := forces_{i,6} \cdot lbf$ $\quad Fz_i := forces_{i,5} \cdot lbf$ $\quad Fx_i := forces_{i,7} \cdot lbf$ $\quad id_{i+rows(forces)} := forces_{i,1}$

Load data from second end of beam

$My_{i+rows(forces)} := -forces_{i,10} \cdot in \cdot lbf$ $\quad Mz_{i+rows(forces)} := forces_{i,9} \cdot in \cdot lbf$ $\quad T_{i+rows(forces)} := forces_{i,8} \cdot in \cdot lbf$

$Fy_{i+rows(forces)} := forces_{i,12} \cdot lbf$ $\quad Fz_{i+rows(forces)} := forces_{i,11} \cdot lbf$ $\quad Fx_{i+rows(forces)} := forces_{i,7} \cdot lbf$

$i := 1 .. rows(forces) \cdot 2$

Detailed Stress Analysis

Bridge Pin (circular diameter) is Loaded in Double Shear. No Moment.

$_i := \sqrt{\left(\frac{Fz_i}{Area}\right)^2}$ $\quad max(\ ) = 822.84\,psi$ $\quad$ *Transverse Shear*

$=p_{i,1} := \left[(\ _i)^2\right]^{\frac{1}{2}}$ $\quad max(=p) = 822.84\,psi$ $\quad$ *Principal Stresses*

$=p_{i,2} := -\left[(\ _i)^2\right]^{\frac{1}{2}}$ $\quad max(=p) = 822.84\,psi$ $\quad max\left(\overrightarrow{|=p|}\right) = 822.84\,psi$ $\quad$ *Maximum Principal*

$=vm_i := \sqrt{(=p_{i,1})^2 + (=p_{i,2})^2 - =p_{i,1} \cdot =p_{i,2}}$ $\quad max(=vm) = 1425.20\,psi$ $\quad$ *Maximum Von-Mises*

$max_i := \sqrt{(\ _i)^2}$ $\quad max(\ max) = 822.84\,psi$ $\quad$ *Maximum Shear*

Margins of Safety for On-Orbit Inertial and Steady State Combined Loads

$$MStu := \left(\frac{Ftu \cdot u}{FSu \cdot \max\left(\overrightarrow{|=p|}\right)}\right) - 1$$ MStu = **80.67** ***Tensile Ultimate***

$$MSty := \left(\frac{Fty \cdot u}{FSy \cdot \max(=vm)}\right) - 1$$ MSty = **50.19** ***Tensile Yield***

$$MSsu := \left(\frac{Fsu \cdot u}{FSu \cdot \max(\ \ \max)}\right) - 1$$ MSsu = **48.00** ***Shear Ultimate***

On-Orbit Steady State Loads

From the Bridge Beam (Section 4.6)

Read formated Naspost output. Naspost file called PASBridgeBeam-SortOn-OrbidSS.nas.lis

$forces2 := READPRN(\text{"beams-OnorbitSS.txt"})$ $\quad i := 1 .. rows(forces)$

Data is modified in the below embedded excel file. Result is for the Max stress - Steady State Stress

$forces3 :=$ Sort Excel

$(forces \quad forces2)$

Load data from first end of beam

$My_i := -forces3_{i,4} \cdot in \cdot lbf \quad Mz_i := forces3_{i,3} \cdot in \cdot lbf \quad T_i := forces3_{i,8} \cdot in \cdot lbf \quad cases_i := forces_{i,2}$

$Fy_i := forces3_{i,6} \cdot lbf \quad Fz_i := forces3_{i,5} \cdot lbf \quad Fx_i := forces3_{i,7} \cdot lbf \quad cases_{i+rows(forces3)} := forces3_{i,2}$

Load data from second end of beam

$My_{i+rows(forces3)} := -forces3_{i,10} \cdot in \cdot lbf \quad Mz_{i+rows(forces3)} := forces3_{i,9} \cdot in \cdot lbf \quad T_{i+rows(forces3)} := forces3_{i,8} \cdot in \cdot lbf$

$Fy_{i+rows(forces3)} := forces3_{i,12} \cdot lbf \quad Fz_{i+rows(forces3)} := forces3_{i,11} \cdot lbf \quad Fx_{i+rows(forces3)} := forces3_{i,7} \cdot lbf$

$i := 1 .. rows(forces3) \cdot 2$

Detailed Stress Analysis

Bridge Pin (circular diameter) is Loaded in Double Shear. No Moment.

$_i := \sqrt{\left(\frac{Fz_i}{Area}\right)^2}$ $\quad max(\ ) = 288.72\,psi$ $\quad$ *Transverse Shear*

$=p_{i,1} := \left[(\ _i)^2\right]^{\frac{1}{2}}$ $\quad max(=p) = 288.72\,psi$ $\quad$ *Principal Stresses*

$=p_{i,2} := -\left[(\ _i)^2\right]^{\frac{1}{2}}$ $\quad max(=p) = 288.72\,psi \quad max\left(\overrightarrow{|=p|}\right) = 288.72\,psi$ $\quad$ *Maximum Principal*

$=vm_i := \sqrt{(=p_{i,1})^2 + (=p_{i,2})^2 - =p_{i,1} \cdot =p_{i,2}}$ $\quad max(=vm) = 500.07\,psi$ $\quad$ *Maximum Von-Mises*

$max_i := \sqrt{(\ _i)^2}$ $\quad max(\ max) = 288.72\,psi$ $\quad$ *Maximum Shear*

Margins of Safety for On-Orbit Steady State Loads

$$MStu := \left(\frac{Ftu \cdot u}{FSu \cdot \max\left(\overrightarrow{|=p|}\right)}\right) - 1$$ MStu = **231.75** ***Tensile Ultimate***

$$MSty := \left(\frac{Fty \cdot u}{FSy \cdot \max(=vm)}\right) - 1$$ MSty = **144.90** ***Tensile Yield***

$$MSsu := \left(\frac{Fsu \cdot u}{FSu \cdot \max(\ \ \max)}\right) - 1$$ MSsu = **138.65** ***Shear Ultimate***

4.9 Bridge Assembly

4.9 PAS Bridge Assembly, SEG39135836

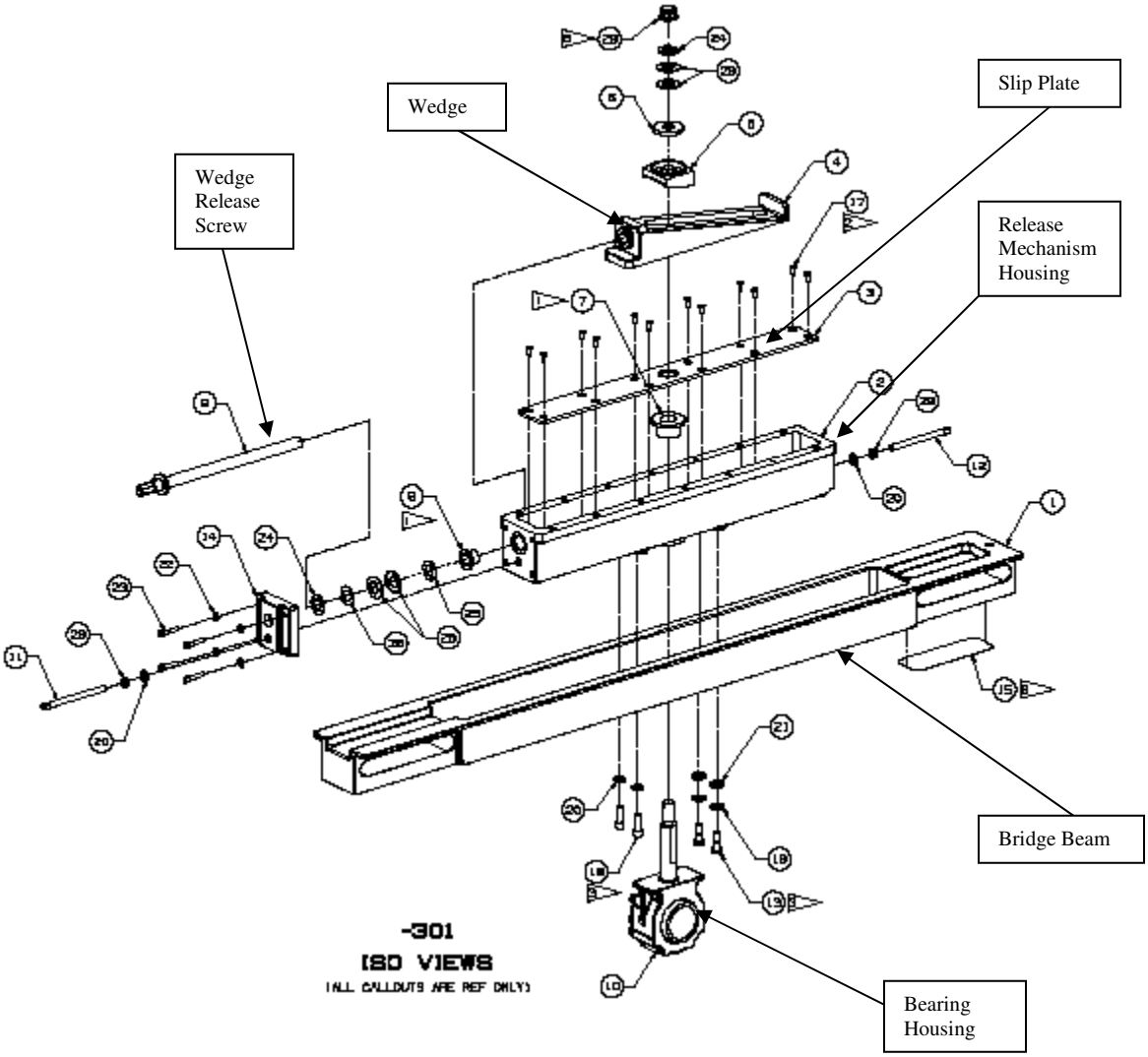

Bridge Assembly

Cross section of platform with bridge beam assembly and release mechanism showing capture bar loading.

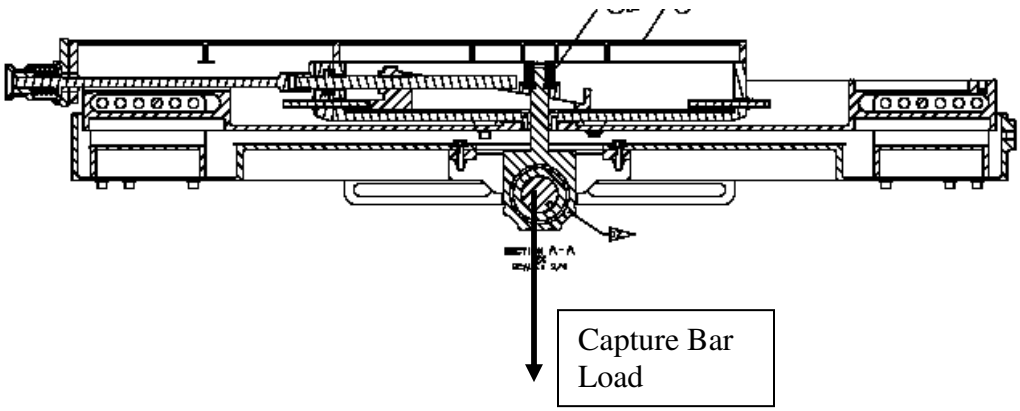

Cross section of bridge beam showing capture bar loading.

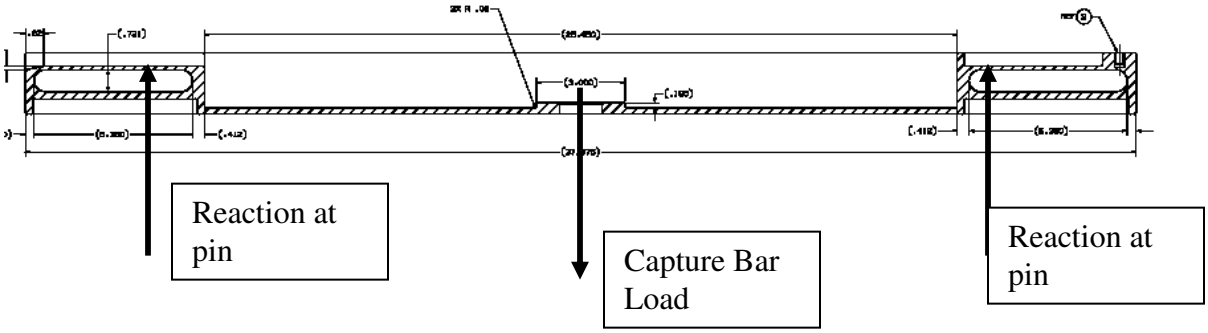

See PAS report sections 4.6, 4.7, 4.8, 4.10, 4.11, and 4.13 for analysis of individual components.

4.10 Bearing Housing

4.10 Bearing Housing, Bearing Assembly, SDG39135845-001

Minimum Margins of Safety

Part/Dwg Number	Part Name/ Description	Material Heat Treatment	Critical Load Condition	Failure Mode	Margin of Safety	Reference Page
SDG39135845-001	Bearing Housing	15-5PH	Ressultant Preload	Section N-N	0.20	4.10-14
		AMS5659	Combined	Tensile		
		H1025	On-Orbit/Mating	Ultimate		

Structural Description

The Bearing Housings (BH) are used to support the PAS capture bar at both ends. The housing contains a spherical bearing that allows the capture bar to rotate at the ends making it simply supported. The BH is held in place with a hex-nut and two belville washers at the top of the bearing shaft. Without this the housing would be free to slide out from the bridge beam assembly. Refer to the figures shown below for both the location of the housing on the PAS along with an iso. view of the bearing housing itself.

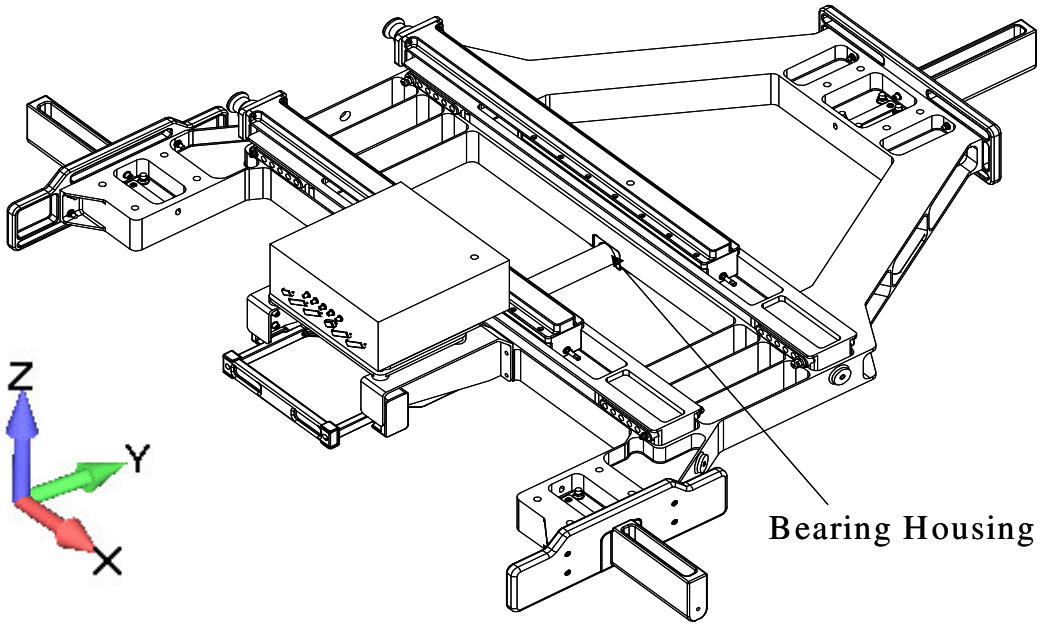

Figure 4.10-1 View Bearing Housing in the PAS Assembly

Summary of Load Conditions

There are three load cases being examined.

1. Resultant preload combined with Flight loads. **"Beams-Flight.txt"**
2. Resultant preload combined with Landing loads. **"Beams-Landing.txt"**
3. Resultant preload combined with On-Orbit/mating envelope loads. **"Beams-Onorbit.txt"**

Factors of Safety

FSy := **1.25** *Yield Factor of Safety*

FSu := **2.0** *Ultimate Factor of Safety*

Materials and Temperature

Material Allowables

CRES 15-5PH, H1025, 6.930 x 3.000 x 1.500, AMS5659

Ftu := **155000**·psi *Tensile Ultimate Strength* Table 2.6.6.0(c) MIL-HDBK-5H

Fty := **145000**·psi *Tensile Yield Strength*

Fsu := **97000**·psi *Shear Ultimate strength*

Temperature Degradation

β := **0.97** *Temperature Correction Factor for 140 ºF,* $\alpha_{tu} = \alpha_{ty} = \alpha$

Figure 2.6.6.1.1 p. 2-162 MIL-HDBK-5H

Description of Finite Element Model and Model Checks

The same finite element model was used for the Bridge Beam, PAS Base, Guide Pins, Aft and Vertex Brackets. For a detailed description of the model see Section 4.1.4. For a detailed description of the model checks, see Section 4.1.5.

Detailed Stress Analysis

Section Properties

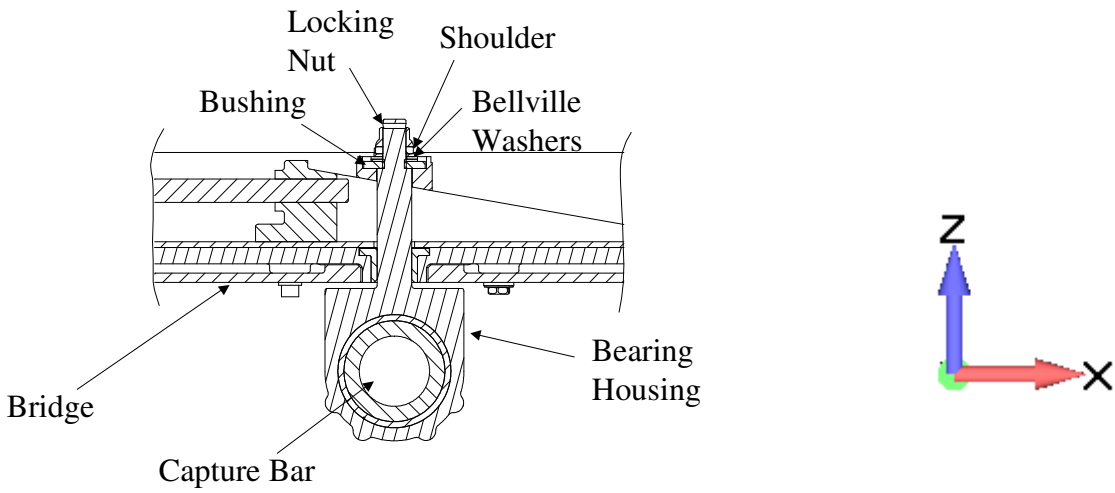

Figure 4.10-2 Configuration of Bearing Housing Inside of the Capture Bar Assembly.

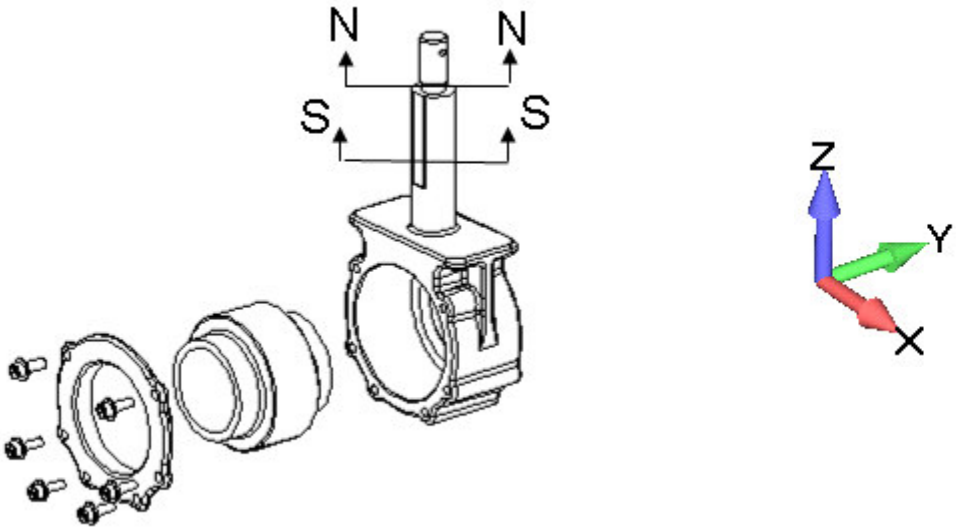

Figure 4.10-3 ISO View of Bearing Housing Assembly

Section Properties for Bearing Housing at Section S-S

ORIGIN := **1**

To be conservative, a shaft diameter of 0.675" will be used for Section S-S

$d := \mathbf{0.675} \cdot in$

$c := \frac{1}{2} \cdot d$ $\qquad c = \mathbf{0.338} \cdot in$

$A_{bear} := \frac{u \cdot d^2}{4}$ $\qquad A_{bear} = \mathbf{0.358} \cdot in^2$

$I_{bh} := \frac{u \cdot d^4}{64}$ $\qquad I_{bh} = \mathbf{0.010} \cdot in^4$

$J_{bh} := \mathbf{2} \cdot I_{bh}$ $\qquad J_{bh} = \mathbf{0.020} \cdot in^4$

0.675 in Diameter

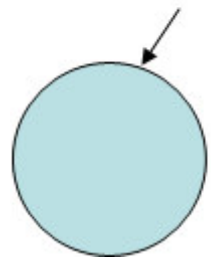

Thread/Joint Section Properties on the Bearing Housing Shaft

$FF := \mathbf{1.15}$ *Joint Fitting Factor*

$N := \mathbf{20} \cdot \frac{1}{in}$ *Pitch of Bolt*

$D := \mathbf{0.5} \cdot in$ *Bolt Diameter*

$At := u \cdot \left(\frac{D - \mathbf{0.9743} \cdot \frac{1}{N}}{2} \right)^2$ $\qquad At = \mathbf{0.160} \cdot in^2$ *Tensile Area of Bolt*

$ctu := \mathbf{0.98}$ $\qquad cty := \mathbf{0.98}$ *Temperature Correction Factors @140ºF*

$ftu := Ftu \cdot At \cdot ctu$ $\qquad ftu = \mathbf{24296.821} \cdot lbf$ *Tensile Ultimate Force Allowable*

$fty := Fty \cdot At \cdot cty$ $\qquad fty = \mathbf{22729.284} \cdot lbf$ *Tensile Yield Force Allowable*

$Fpmax := \mathbf{.75} \cdot fty$ $\qquad Fpmax = \mathbf{17046.963} \cdot lbf$ *Maximum Tension from Preload*

$Fpmin := \mathbf{.85} \cdot Fpmax$ $\qquad Fpmin = \mathbf{14489.919}\, lbf$ *Minimum Tension from Preload*

$n := \mathbf{1.0}$ *Loading Plane Factor*

$:= \mathbf{0.111}$ *Joint Load Factor (steel bolt/steel plate)*

Section Properties for Bearing Housing at Section N-N

$D_S := \mathbf{0.426} in$ *Diameter of Bearing Housing Shaft*

$A_{shoulder} := \frac{u \cdot D_S^2}{4}$ $\qquad A_{shoulder} = \mathbf{0.143} \cdot in^2$ *Area of Bearing Housing Shaft*

Resultant Preload Combined With Flight Loads

Check Bearing Housing at Section S-S

Loads

forces := READPRN("**Beams-Flight.txt**")

$i := 1 .. rows(forces)$ $\qquad cases_i := forces_{i,2}$ $\qquad cases_{i+rows(forces)} := forces_{i,2}$

1	2	3	4	5	6	7	8	9	10	11	12
ID	SUBCASE	MOM-A-1	MOM-A-2	SHEAR-A-1	SHEAR-A-2	AXIAL-A	TOT-TORQ-A	MOM-B-1	MOM-B-2	SHEAR-B-1	SHEAR-B-2

Load data from first end of beam

$M1_i := forces_{i,3} \cdot in \cdot lbf$ $\qquad M2_i := forces_{i,4} \cdot in \cdot lbf$

$S1_i := forces_{i,5} \cdot lbf$ $\qquad S2_i := forces_{i,6} \cdot lbf$

$Tx_i := forces_{i,8} \cdot in \cdot lbf$ $\qquad Fax_i := forces_{i,7} \cdot lbf$

Load data from second end of beam

$M1_{i+rows(forces)} := forces_{i,9} \cdot in \cdot lbf$ $\qquad M2_{i+rows(forces)} := forces_{i,10} \cdot in \cdot lbf$

$S1_{i+rows(forces)} := forces_{i,11} \cdot lbf$ $\qquad S2_{i+rows(forces)} := forces_{i,12} \cdot lbf$

$Tx_{i+rows(forces)} := forces_{i,8} \cdot in \cdot lbf$ $\qquad Fax_{i+rows(forces)} := forces_{i,7} \cdot lbf$

Stresses

$i := 1 .. rows(forces) \cdot 2$ $\qquad j := i$

$$=_j := \sqrt{\left(\frac{M1_j \cdot c}{I_{bh}}\right)^2 + \left(\frac{M2_j \cdot c}{I_{bh}}\right)^2} + \frac{Fax_j}{A_{bear}}$$

$$y_j := \frac{4}{3}\frac{\sqrt{(S1_j)^2 + (S2_j)^2}}{A_{bear}} + \frac{Tx_j \cdot \frac{1}{2} \cdot d}{J_{bh}}$$

$$y_{max_j} := \sqrt{\left(\frac{=_j}{2}\right)^2 + (y_j)^2}$$ *Maximum Shear Stress*

$$=_{max_j} := \frac{=_j}{2} + y_{max_j}$$

$\max(=_{max}) = 12.30 \cdot ksi$ *Maximum Principle Stress*

$\min(=_{max}) = 0.11 \cdot ksi$ *Minimum Principle Stress*

Margin of Safety of Bearing Housing at Section S-S

$MS_{tu_j} := \frac{Ftu \cdot \beta}{=max_j \cdot FSu} - 1$ $\quad \min(MS_{tu}) = \mathbf{5.11}$ *Tensile Ultimate*

$MS_{ty_j} := \frac{Fty \cdot \beta}{=max_j \cdot FSy} - 1$ $\quad \min(MS_{ty}) = \mathbf{8.14}$ *Tensile Yield*

$MS_{su_j} := \frac{Fsu \cdot \beta}{y_{max_j} \cdot FSu} - 1$ $\quad \min(MS_{su}) = \mathbf{5.86}$ *Shear Ultimate*

$Rat := \frac{=max}{Ftu \cdot \beta}$

$\max(Rat) = \mathbf{0.082}$

$output1 := augment(stack(forces, forces), MS_{tu})$

$output2 := augment(output1, MS_{ty})$

$output3 := augment(output2, MS_{su})$

$L := \mathbf{1} .. cols(output3)$

$worstMSu_{\mathbf{1},L} := \left[\left(csort(output3, \mathbf{1} + \mathbf{12})^T\right)^{\langle \mathbf{1} \rangle}\right]_L$ *Sort using lowest MSu*

$worstMSy_{\mathbf{1},L} := \left[\left(csort(output3, \mathbf{1} + \mathbf{13})^T\right)^{\langle \mathbf{1} \rangle}\right]_L$ *Sort using lowest MSy*

$worstMSs_{\mathbf{1},L} := \left[\left(csort(output3, \mathbf{1} + \mathbf{14})^T\right)^{\langle \mathbf{1} \rangle}\right]_L$ *Sort using lowest MSs*

	MSu	MSy	MSs
	$worstMSu_{\mathbf{1},L} =$	$worstMSy_{\mathbf{1},L} =$	$worstMSs_{\mathbf{1},L} =$
ID	$22.802 \cdot 10^6$	$22.802 \cdot 10^6$	$22.802 \cdot 10^6$
case	1031.000	1031.000	1031.000
M1	-22.000	-22.000	-22.000
M2	-127.000	-127.000	-127.000
S1	-81.000	-81.000	-81.000
S2	-105.000	-105.000	-105.000
Fax	21.000	21.000	21.000
Tz	-281.000	-281.000	-281.000
M1	245.000	245.000	245.000
M2	217.000	217.000	217.000
S1	-81.000	-81.000	-81.000
S2	-105.000	-105.000	-105.000
MSu	5.110	5.110	5.110
MSy	8.145	8.145	8.145
MSs	5.863	5.863	5.863

Check Threads on the Bearing Housing Shaft

Loads

$Wjs_j := \frac{Fpmin}{1 - n\cdot}$ $\quad$ $\min(Wjs) = \mathbf{16299.121}\cdot lbf$ *Joint Seperation Load*

Stresses

Check for joint separation (if ratio is > 1.0, separation occurs)

$check_ratio_j := \frac{Fax_j}{\frac{Fpmin}{1-n\cdot}}$ $\quad$ $\max(check_ratio) = \mathbf{0.001}$ *Joint Separation*

$Fnormal_j := Fpmax + \quad \cdot n\cdot(FSu\cdot FF\cdot Fax_j)$ *Combined Axial Load*

$\max\left(\frac{=}{Ftu}\right) = \mathbf{0.074}$

$=_j := \frac{Fpmax + \quad \cdot n\cdot(FSu\cdot FF\cdot Fax_j)}{At}$ $\quad$ $\max(=) = \mathbf{106610.114}\cdot psi$ *Max normal stress on threaded region*

$\min(=) = \mathbf{106551.059}\cdot psi$ *Min normal stress on threaded region*

$=qq_j := \frac{Fax_j}{At}$ $\quad$ $\max(=qq) = \mathbf{137.541}\cdot psi$ *Max normal stress on threaded region*

$\min(=qq) = -\mathbf{93.778}\cdot psi$ *Min normal stress on threaded region*

Margin of Safety for Threads on the Bearing Housing Shaft

$MS_{tu_j} := \frac{Ftu\cdot\beta}{=_j} - \mathbf{1}$ $\quad$ $\min(MS_{tu}) = \mathbf{0.41}$ *Ultimate*

$\max\left(\frac{=}{Ftu}\right) = \mathbf{0.688}$

Check Bearing Housing at Section N-N

Stresses

$=sh_j := \frac{Fnormal_j}{A_{shoulder}}$ $\quad$ $\max(=sh) = \mathbf{119641.268}\cdot psi$

$\min(=sh) = \mathbf{119574.994}\cdot psi$

Margin of Safety of Bearing Housing at Section N-N

$MS_{tu_j} := \frac{Ftu\cdot\beta}{=sh_j} - \mathbf{1}$ $\quad$ $\min(MS_{tu}) = \mathbf{0.26}$ *Ultimate*

Resultant Preload Combined With Landing Loads

Check Bearing Housing at Section S-S

Loads

forces := READPRN("**Beams-Landing.txt**")

$i := 1 .. rows(forces)$ $\quad cases_i := forces_{i,2}$ $\quad cases_{i+rows(forces)} := forces_{i,2}$

1	2	3	4	5	6	7	8	9	10	11	12
ID	SUBCASE	MOM-A-1	MOM-A-2	SHEAR-A-1	SHEAR-A-2	AXIAL-A	TOT-TORQ-A	MOM-B-1	MOM-B-2	SHEAR-B-1	SHEAR-B-2

Load data from first end of beam

$M1_i := forces_{i,3} \cdot in \cdot lbf$ $\quad M2_i := forces_{i,4} \cdot in \cdot lbf$

$S1_i := forces_{i,5} \cdot lbf$ $\quad S2_i := forces_{i,6} \cdot lbf$

$Tx_i := forces_{i,8} \cdot in \cdot lbf$ $\quad Fax_i := forces_{i,7} \cdot lbf$

Load data from second end of beam

$M1_{i+rows(forces)} := forces_{i,9} \cdot in \cdot lbf$ $\quad M2_{i+rows(forces)} := forces_{i,10} \cdot in \cdot lbf$

$S1_{i+rows(forces)} := forces_{i,11} \cdot lbf$ $\quad S2_{i+rows(forces)} := forces_{i,12} \cdot lbf$

$Tx_{i+rows(forces)} := forces_{i,8} \cdot in \cdot lbf$ $\quad Fax_{i+rows(forces)} := forces_{i,7} \cdot lbf$

Stresses

$i := 1 .. rows(forces) \cdot 2$ $\quad j := i$

$$\tau_j := \sqrt{\left(\frac{M1_j \cdot c}{I_{bh}}\right)^2 + \left(\frac{M2_j \cdot c}{I_{bh}}\right)^2} + \frac{Fax_j}{A_{bear}}$$

$$y_j := \frac{4}{3}\frac{\sqrt{(S1_j)^2 + (S2_j)^2}}{A_{bear}} + \frac{Tx_j \cdot \frac{1}{2} \cdot d}{J_{bh}}$$

$$y_{max_j} := \sqrt{\left(\frac{\tau_j}{2}\right)^2 + (y_j)^2}$$ *Maximum Shear Stress*

$$\tau_{max_j} := \frac{\tau_j}{2} + y_{max_j}$$

$max(\tau_{max}) = 15.35 \cdot ksi$ *Maximum Principle Stress*

$min(\tau_{max}) = 0.01 \cdot ksi$ *Minimum Principle Stress*

Margin of Safety of Bearing Housing at Section S-S

$MS_{tu_j} := \frac{Ftu \cdot \beta}{\bar{=}max_j \cdot FSu} - 1$ $\quad \min(MS_{tu}) = \mathbf{3.90}$ *Tensile Ultimate*

$Rat := \frac{\bar{=}max}{Ftu \cdot \beta}$

$MS_{ty_j} := \frac{Fty \cdot \beta}{\bar{=}max_j \cdot FSy} - 1$ $\quad \min(MS_{ty}) = \mathbf{6.33}$ *Tensile Yield*

$\max(Rat) = \mathbf{0.102}$

$MS_{su_j} := \frac{Fsu \cdot \beta}{y_{max_j} \cdot FSu} - 1$ $\quad \min(MS_{su}) = \mathbf{4.94}$ *Shear Ultimate*

$output1 := augment(stack(forces, forces), MS_{tu})$

$output2 := augment(output1, MS_{ty})$

$output3 := augment(output2, MS_{su})$

$L := \mathbf{1} .. cols(output3)$

$worstMSu_{\mathbf{1},L} := \left[\left(csort(output3, \mathbf{1} + \mathbf{12})^T\right)^{\langle \mathbf{1} \rangle}\right]_L$ *Sort using lowest MSu*

$worstMSy_{\mathbf{1},L} := \left[\left(csort(output3, \mathbf{1} + \mathbf{13})^T\right)^{\langle \mathbf{1} \rangle}\right]_L$ *Sort using lowest MSy*

$worstMSs_{\mathbf{1},L} := \left[\left(csort(output3, \mathbf{1} + \mathbf{14})^T\right)^{\langle \mathbf{1} \rangle}\right]_L$ *Sort using lowest MSs*

	MSu	MSy	MSs
	$worstMSu_{\mathbf{1},L} =$	$worstMSy_{\mathbf{1},L} =$	$worstMSs_{\mathbf{1},L} =$
ID	$22.802 \cdot 10^6$	$22.802 \cdot 10^6$	$22.802 \cdot 10^6$
case	2031.000	2031.000	2031.000
M1	-7.000	-7.000	-7.000
M2	-87.000	-87.000	-87.000
S1	-132.000	-132.000	-132.000
S2	-66.000	-66.000	-66.000
Fax	49.000	49.000	49.000
Tz	-198.000	-198.000	-198.000
M1	426.000	426.000	426.000
M2	128.000	128.000	128.000
S1	-132.000	-132.000	-132.000
S2	-66.000	-66.000	-66.000
MSu	3.896	3.896	3.896
MSy	6.328	6.328	6.328
MSs	4.940	4.940	4.940

Check Threads on the Bearing Housing Shaft

Loads

$Wjs_j := \frac{Fpmin}{1 - n\cdot}$ $\quad$ $\min(Wjs) = \mathbf{16299.121}\cdot lbf$ *Joint Seperation Load*

Stresses

Check for joint separation (if ratio is > 1.0, separation occurs)

$check_ratio_j := \frac{Fax_j}{\frac{Fpmin}{1-n\cdot}}$ $\quad$ $\max(check_ratio) = \mathbf{0.003}$ *Joint Separation*

$Fnormal_j := Fpmax + \quad \cdot n\cdot(FSu\cdot FF\cdot Fax_j)$ *Combined Axial Load*

$\max\left(\frac{=}{Ftu}\right) = \mathbf{0.096}$

$=_j := \frac{Fpmax + \quad \cdot n\cdot(FSu\cdot FF\cdot Fax_j)}{At}$ $\quad$ $\max(=) = \mathbf{106653.209}\cdot psi$ *Max normal stress on threaded region*

$\min(=) = \mathbf{106539.886}\cdot psi$ *Min normal stress on threaded region*

$=qq_j := \frac{Fax_j}{At}$ $\quad$ $\max(=qq) = \mathbf{306.340}\cdot psi$ *Max normal stress on threaded region*

$\min(=qq) = -\mathbf{137.541}\cdot psi$ *Min normal stress on threaded region*

Margin of Safety for Threads on the Bearing Housing Shaft

$MS_{tu_j} := \frac{Ftu\cdot\beta}{=_j} - \mathbf{1}$ $\quad$ $\min(MS_{tu}) = \mathbf{0.41}$ *Ultimate*

$\max\left(\frac{=}{Ftu}\right) = \mathbf{0.688}$

Check Bearing Housing at Section N-N

Stresses

$=sh_j := \frac{Fnormal_j}{A_{shoulder}}$ $\quad$ $\max(=sh) = \mathbf{119689.630}\cdot psi$

$\min(=sh) = \mathbf{119562.456}\cdot psi$

Margin of Safety of Bearing Housing at Section N-N

$MS_{tu_j} := \frac{Ftu\cdot\beta}{=sh_j} - \mathbf{1}$ $\quad$ $\min(MS_{tu}) = \mathbf{0.26}$ *Ultimate*

Resultant Preload Combined With On-Orbit/Mating Envelope Loads

Check Bearing Housing at Section S-S

Loads

forces := READPRN("**Beams-Onorbit.txt**")

$i := 1 .. rows(forces)$ $\quad cases_i := forces_{i,2}$ $\quad cases_{i+rows(forces)} := forces_{i,2}$

1	2	3	4	5	6	7	8	9	10	11	12
ID	SUBCASE	MOM-A-1	MOM-A-2	SHEAR-A-1	SHEAR-A-2	AXIAL-A	TOT-TORQ-A	MOM-B-1	MOM-B-2	SHEAR-B-1	SHEAR-B-2

Load data from first end of beam

$M1_i := forces_{i,3} \cdot in \cdot lbf$ $\quad M2_i := forces_{i,4} \cdot in \cdot lbf$

$S1_i := forces_{i,5} \cdot lbf$ $\quad S2_i := forces_{i,6} \cdot lbf$

$Tx_i := forces_{i,8} \cdot in \cdot lbf$ $\quad Fax_i := forces_{i,7} \cdot lbf$

Load data from second end of beam

$M1_{i+rows(forces)} := forces_{i,9} \cdot in \cdot lbf$ $\quad M2_{i+rows(forces)} := forces_{i,10} \cdot in \cdot lbf$

$S1_{i+rows(forces)} := forces_{i,11} \cdot lbf$ $\quad S2_{i+rows(forces)} := forces_{i,12} \cdot lbf$

$Tx_{i+rows(forces)} := forces_{i,8} \cdot in \cdot lbf$ $\quad Fax_{i+rows(forces)} := forces_{i,7} \cdot lbf$

Stresses

$i := 1 .. rows(forces) \cdot 2$ $\quad j := i$

$$\equiv_j := \sqrt{\left(\frac{M1_j \cdot c}{I_{bh}}\right)^2 + \left(\frac{M2_j \cdot c}{I_{bh}}\right)^2} + \frac{Fax_j}{A_{bear}}$$

$$y_j := \frac{4}{3}\frac{\sqrt{(S1_j)^2 + (S2_j)^2}}{A_{bear}} + \frac{Tx_j \cdot \frac{1}{2} \cdot d}{J_{bh}}$$

$$y_{max_j} := \sqrt{\left(\frac{\equiv_j}{2}\right)^2 + (y_j)^2}$$ *Maximum Shear Stress*

$$\equiv_{max_j} := \frac{\equiv_j}{2} + y_{max_j}$$

$\max(\equiv_{max}) = 30.86 \cdot ksi$ *Maximum Principle Stress*

$\min(\equiv_{max}) = 8.81 \cdot ksi$ *Minimum Principle Stress*

Margin of Safety of Bearing Housing at Section S-S

$MS_{tu_j} := \frac{Ftu \cdot \beta}{=max_j \cdot FSu} - 1$ $\quad \min(MS_{tu}) = \mathbf{1.44}$ *Tensile Ultimate*

$MS_{ty_j} := \frac{Fty \cdot \beta}{=max_j \cdot FSy} - 1$ $\quad \min(MS_{ty}) = \mathbf{2.65}$ *Tensile Yield*

$MS_{su_j} := \frac{Fsu \cdot \beta}{y_{max_j} \cdot FSu} - 1$ $\quad \min(MS_{su}) = \mathbf{1.99}$ *Shear Ultimate*

$Rat := \frac{=max}{Ftu \cdot \beta}$

$\max(Rat) = \mathbf{0.205}$

$output1 := augment(stack(forces, forces), MS_{tu})$

$output2 := augment(output1, MS_{ty})$

$output3 := augment(output2, MS_{su})$

$L := \mathbf{1} .. cols(output3)$

$worstMSu_{\mathbf{1},L} := \left[\left(csort(output3, \mathbf{1}+\mathbf{12})^T\right)^{\langle \mathbf{1} \rangle}\right]_L$ *Sort using lowest MSu*

$worstMSy_{\mathbf{1},L} := \left[\left(csort(output3, \mathbf{1}+\mathbf{13})^T\right)^{\langle \mathbf{1} \rangle}\right]_L$ *Sort using lowest MSy*

$worstMSs_{\mathbf{1},L} := \left[\left(csort(output3, \mathbf{1}+\mathbf{14})^T\right)^{\langle \mathbf{1} \rangle}\right]_L$ *Sort using lowest MSs*

	MSu	MSy	MSs
	$worstMSu_{\mathbf{1},L} =$	$worstMSy_{\mathbf{1},L} =$	$worstMSs_{\mathbf{1},L} =$
ID	$22.802 \cdot 10^6$	$22.802 \cdot 10^6$	$22.802 \cdot 10^6$
case	5014.000	5014.000	5014.000
M1	-130.000	-130.000	-130.000
M2	534.000	534.000	534.000
S1	-153.000	-153.000	-153.000
S2	4.000	4.000	4.000
Fax	3236.000	3236.000	3236.000
Tz	-305.000	-305.000	-305.000
M1	370.000	370.000	370.000
M2	521.000	521.000	521.000
S1	-153.000	-153.000	-153.000
S2	4.000	4.000	4.000
MSu	1.436	1.436	1.436
MSy	2.646	2.646	2.646
MSs	1.986	1.986	1.986

Check Threads on the Bearing Housing Shaft

Loads

$Wjs_j := \frac{Fpmin}{1 - n}$ $\quad$ $\min(Wjs) = \mathbf{16299.121} \cdot lbf$ *Joint Seperation Load*

Stresses

Check for joint separation (if ratio is > 1.0, separation occurs)

$check_ratio_j := \frac{Fax_j}{\frac{Fpmin}{1-n}}$ $\quad$ $\max(check_ratio) = \mathbf{0.200}$ *Joint Separation*

$Fnormal_j := Fpmax + \quad \cdot n \cdot (FSu \cdot FF \cdot Fax_j)$ *Combined Axial Load*

$\max\left(\frac{=}{Ftu}\right) = \mathbf{0.195}$

$=_j := \frac{Fpmax + \quad \cdot n \cdot (FSu \cdot FF \cdot Fax_j)}{At}$ $\quad$ $\max(=) = \mathbf{111786.255} \cdot psi$ *Max normal stress on threaded region*

$\min(=) = \mathbf{111607.492} \cdot psi$ *Min normal stress on threaded region*

$=qq_j := \frac{Fax_j}{At}$ $\quad$ $\max(=qq) = \mathbf{20412.280} \cdot psi$ *Max normal stress on threaded region*

$\min(=qq) = \mathbf{19712.073} \cdot psi$ *Min normal stress on threaded region*

Margin of Safety for Threads on the Bearing Housing Shaft

$MS_{tu_j} := \frac{Ftu \cdot \beta}{=_j} - \mathbf{1}$ $\quad$ $\min(MS_{tu}) = \mathbf{0.34}$ *Ultimate*

$\max\left(\frac{=}{Ftu}\right) = \mathbf{0.721}$

Check Bearing Housing at Section N-N

Stresses

$=sh_j := \frac{Fnormal_j}{A_{shoulder}}$ $\quad$ $\max(=sh) = \mathbf{125450.098} \cdot psi$

$\min(=sh) = \mathbf{125249.485} \cdot psi$

Margin of Safety of Bearing Housing at Section N-N

$MS_{tu_j} := \frac{Ftu \cdot \beta}{=sh_j} - \mathbf{1}$ $\quad$ $\min(MS_{tu}) = \mathbf{0.20}$ *Ultimate*

4.11 Capture Bar Assembly

4.11 Capture Bar Handle Assembly

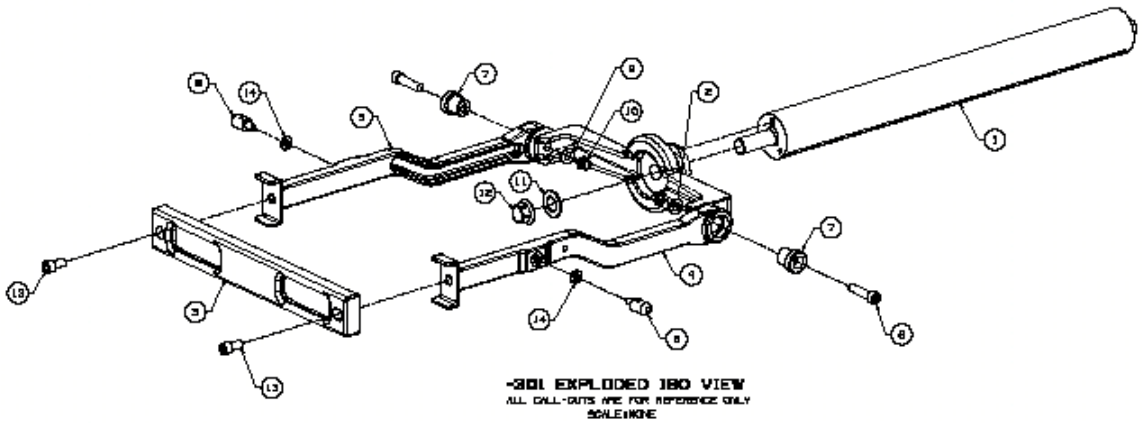

Capture Bar

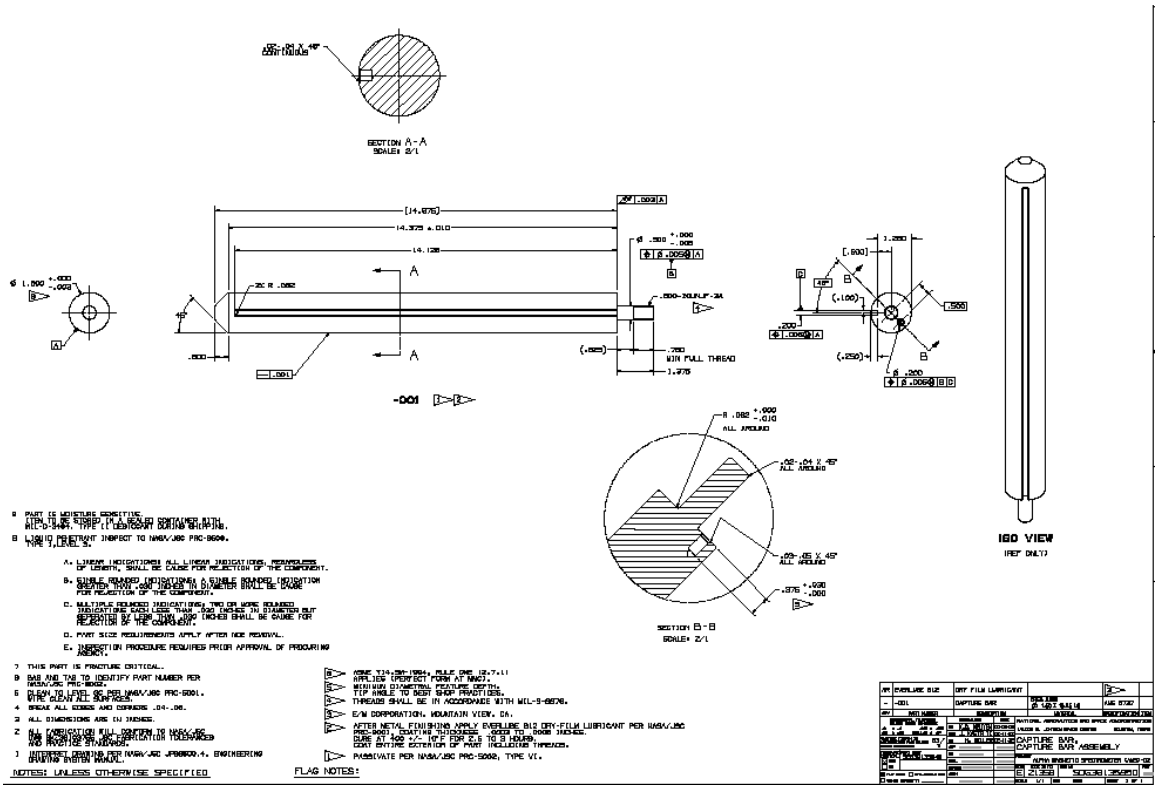

4.11.1 Capture Bar

4.11.1 Capture Bar, SDG39135850-001

Minimum Margins of Safety

Part/Dwg Number	Part Name/ Description	Material Heat Treatment	Critical Load Condition	Failure Mode	Margin of Safety	Reference Page
SDG39135850-001	Capture Bar	CRES A-286 AMS 5737	On-Orbit	Tensile Ultimate	0.01	4.11.1-7

Structural Description

Figure 4.11.1-1 shows and exploded ISO view of the Capture Bar Assembly which includes the Capture Bar, Handle Base, Handle, and Handle Extension Assembly along with their associated fasteners.

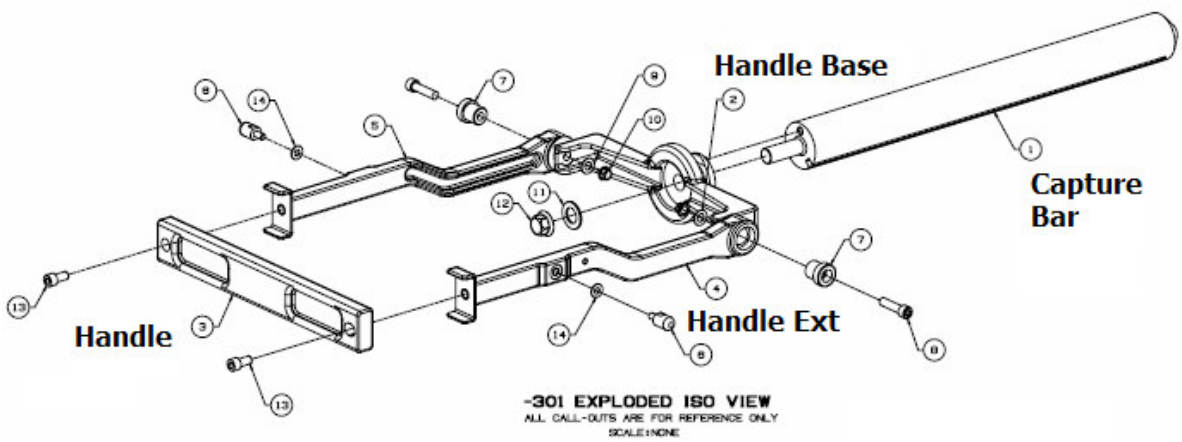

Figure 4.11.1-1 Capture Bar Assembly, AMS Passive PAS Assy, SEG39135849

Summary of Load Conditions

There are three load cases being examined.

1. Resultant preload combined with Flight loads. **"Beams-Flight.txt"**
2. Resultant preload combined with Landing loads. **"Beams-Landing.txt"**
3. Resultant preload combined with On-Orbit/mating envelope loads. **"Beams-On-Orbit.txt"**

Capture bar can be treated as a simply supported beam with two applied point loads from the capture claw (Figure 4.11.1-2).
Forces are taken from the NASTRAN results and then applied using beam equations

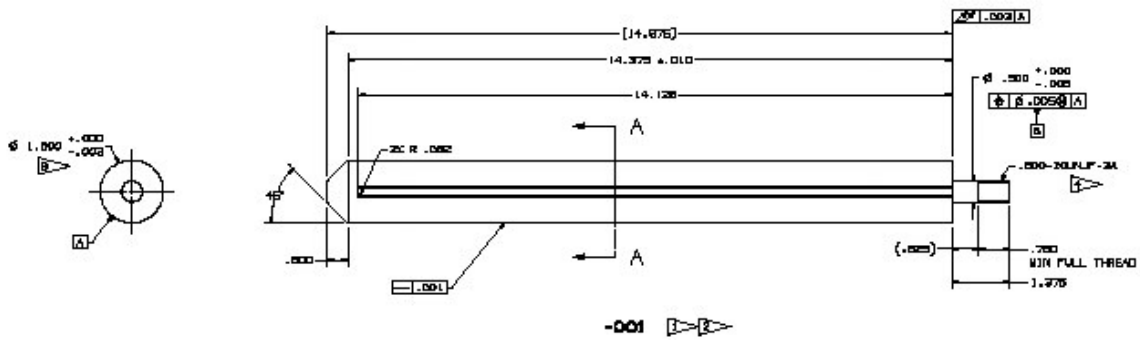

Figure 4.11.1-2 Capture Bar, Capture Bar Assembly, SDG39135850

Factors of Safety

$FS_u := \mathbf{2.0}$

$FS_y := \mathbf{1.25}$

Materials and Temperature

Material Allowables

MMPDS-03 Table 6.2.1.0(b), pp. 6-6.

CRES A-286, AMS 5737, Bar, 1.50 Dia x 16.25 LG, S

$F_{tu} := \mathbf{140000} \cdot psi$ $F_{ty} := \mathbf{95000} \cdot psi$ $F_{su} := \mathbf{91000} \cdot psi$

Temperature Degradation

$\beta := \mathbf{0.96}$ $\beta_u = \beta_y = \beta,$ *MMPDS-03 Figure 6.2.1.1.1., pp. 6-7*

Finite Element Model - Description, Model Checks

The same finite element model was used for the Capture Bar, Bridge Beam, PAS Base, Guide Pins, Aft and Vertex Brackets.
For a detailed description of the model see Section 4.1.4.
For a detailed description of the model checks, see Section 4.1.5.

Detailed Stress Analysis

Section Properties

Section A-A (Figure 4.11.1-2) cross section is a circle with a groove as shown in Figure 4.11.1-3.

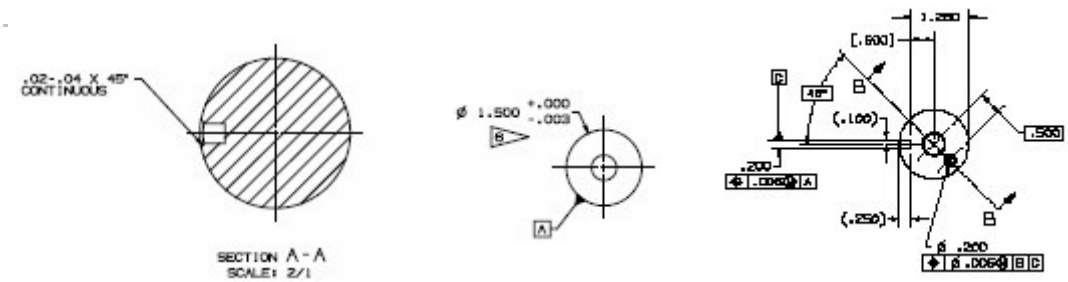

Figure 4.11.1-3 Cross Sectional Views of the Capture Bar

$d := \mathbf{1.5} \cdot in$ *Outer Diameter*

$groove_width := \mathbf{.1} \cdot in$

$groove_depth := \mathbf{.25} \cdot in$

$Area := \left(\frac{\varepsilon}{\mathbf{4}}\right) \cdot \left(d^{\mathbf{2}}\right) - groove_width \cdot groove_depth$ $\quad Area = \mathbf{1.74} \cdot in^{\mathbf{2}}$ *Area*

$yc := \frac{d}{\mathbf{2}}$ $\quad yc = \mathbf{0.75} \cdot in$

$zc := \frac{d}{\mathbf{2}}$ $\quad zc = \mathbf{0.75} \cdot in$ *Distance to Centroid*

$cy := yc$ $\quad cy = \mathbf{0.75} \cdot in$

$cz := zc$ $\quad cz = \mathbf{0.75} \cdot in$ *Distance from Centroid to Outer Fiber*

$J := \frac{\mathbf{1}}{\mathbf{32}} \cdot \varepsilon \cdot \left(d^{\mathbf{4}}\right)$ *Torsional Constant*

$r := \frac{d}{\mathbf{2}}$ *Radius of Gyration*

Moments of Inertia About Centroid

$$Iy := \left(\frac{\varepsilon}{64}\right)\cdot\left(d^4\right) - \left[\left(\frac{1}{12}\cdot groove_width\cdot groove_depth^3\right) + groove_width\cdot groove_depth\cdot\left(zc - \frac{groove_depth}{2}\right)^2\right]$$

$$Iy = 0.23861\cdot in^4$$

$$Iz := \left(\frac{\varepsilon}{64}\right)\cdot\left(d^4\right) - \left(\left(\frac{1}{12}\cdot groove_width\cdot groove_depth^3\right)\right)$$

$$Iz = 0.24837\cdot in^4$$

$$Iyz := 0\cdot in^4$$

(Iy and Iz are About the Principle Axes)

Now, rotate the cross section about q

$$Iyrot(\beta) := Iy\cdot\cos(\beta)^2 + Iz\cdot\sin(\beta)^2 - Iyz\cdot\sin(2\cdot\beta) \qquad Iyrot(50\cdot deg) = 0.24434\cdot in^4$$

$$Izrot(\beta) := Iz\cdot\cos(\beta)^2 + Iy\cdot\sin(\beta)^2 + Iyz\cdot\sin(2\cdot\beta) \qquad Izrot(50\cdot deg) = 0.24264\cdot in^4$$

$$Iyzrot(\beta) := \frac{Iy - Iz}{2}\cdot\sin(2\cdot\beta) + Iyz\cdot\cos(2\cdot\beta)$$

$$z(\beta) := \frac{d}{2}\cdot\cos(\beta) \qquad y(\beta) := \frac{d}{2}\cdot\sin(\beta)$$

$$Iy := Iyrot(50\cdot deg)$$

$$Iz := Izrot(50deg)$$

Check Capture Bar at Section A-A, On-Orbit Loads

Loads

Forces and moments for the beam elements used for the capture bar are in the file beams-on-orbit.txt

$forces := READPRN(\text{"beams-on-orbit.txt"})$ $\quad i := 1 .. rows(forces)$

$V1_i := forces_{i,5} \cdot lbf$ $\quad max(V1) = 510.00 \cdot lbf$ $\quad Fa_i := forces_{i,7} \cdot lbf$ $\quad max(Fa) = 452.00 \cdot lbf$

$V2_i := forces_{i,6} \cdot lbf$ $\quad max(V2) = 3266 \cdot lbf$ $\quad T_i := forces_{i,8} \cdot in \cdot lbf$ $\quad max(T) = 469 \cdot in \cdot lbf$

$M1a_i := forces_{i,3} \cdot in \cdot lbf$ $\quad M2a_i := forces_{i,4} \cdot in \cdot lbf$

$M1b_i := forces_{i,10} \cdot in \cdot lbf$ $\quad M2b_i := forces_{i,11} \cdot in \cdot lbf$

$M1_i := \begin{cases} M1a_i & \text{if } |M1a_i| \ge |M1b_i| \\ M1b_i & \text{otherwise} \end{cases}$ $\quad M2_i := \begin{cases} M2a_i & \text{if } |M2a_i| \ge |M2b_i| \\ M2b_i & \text{otherwise} \end{cases}$

$max(M1) = 2268.00 \cdot in \cdot lbf$ $\quad max(M2) = 267.00 \cdot in \cdot lbf$

$min(M1) = -2267.00 \cdot in \cdot lbf$ $\quad min(M2) = -19388.00 \cdot in \cdot lbf$

Stresses

$\sigma_i := \frac{|Fa_i|}{Area} + \frac{|M1_i| \cdot cz}{Iy} + \frac{|M2_i| \cdot cy}{Iz}$ $\quad max(\sigma) = 66453 \cdot psi$ *Axial plus Bending*

$\sigma v_i := \sqrt{\left(\frac{V1_i}{Area}\right)^2 + \left(\frac{V2_i}{Area}\right)^2}$ $\quad max(\sigma v) = 1890 \cdot psi$ *Shear Due to Transverse*

$\sigma t_i := |T_i| \cdot \frac{r}{J}$ $\quad max(\sigma t) = 786 \cdot psi$ *Shear Due To Torsion*

$\sigma := \sigma v + \sigma t$ $\quad max(\sigma) = 2644 \cdot psi$ *Combined Shear*

$\sigma p_{i,1} := \frac{\sigma_i}{2} + \left[\left(\frac{\sigma_i}{2}\right)^2 + (\sigma_i)^2\right]^{\frac{1}{2}}$ $\quad \sigma p_{i,2} := \frac{\sigma_i}{2} - \left[\left(\frac{\sigma_i}{2}\right)^2 + (\sigma_i)^2\right]^{\frac{1}{2}}$ *Principal Stresses*

$f_{tu} := max\left(\overrightarrow{|\sigma p|}\right) = 66520.42 psi$ *Maximum Absolute Principal*

$\overline{max\left(\sigma p^{\langle 1 \rangle}\right)} = 66520 \cdot psi$ *Maximum Principal*

$\sigma vm_i := \sqrt{(\sigma p_{i,1})^2 + (\sigma p_{i,2})^2 - \sigma p_{i,1} \cdot \sigma p_{i,2}}$ $\quad f_{ty} := max(\sigma vm) = 66554.17 psi$ *Von-Mises*

$$\tau max_i := \sqrt{\frac{1}{4}\cdot(\tau_i)^2 + (\tau_i)^2}$$

$$f_{su} := \max(\tau max) = \mathbf{33293.94}\,psi$$ *Maximum Shear*

Margins of Safety - Capture Bar at Section A-A, On-Orbit Loads

$$MS_{tu} := \left(\frac{F_{tu}\cdot\beta}{FS_u\cdot f_{tu}}\right) - \mathbf{1} = \mathbf{0.01}$$ *Tensile Ultimate*

$$MS_{ty} := \left(\frac{F_{ty}\cdot\beta}{FS_y\cdot f_{ty}}\right) - \mathbf{1} = \mathbf{0.10}$$ *Tensile Yield*

$$MS_{su} := \left(\frac{F_{su}\cdot\beta}{FS_u\cdot f_{su}}\right) - \mathbf{1} = \mathbf{0.31}$$ *Shear Ultimate*

Check Capture Bar at Section A-A, Flight Loads

Loads

Forces and moments for the beam elements used for the capture bar are in the file beams-flight.txt

$forces := READPRN(\text{"beams-flight.txt"})$ $\quad i := 1 .. rows(forces)$

$V1_i := forces_{i,5} \cdot lbf$ $\quad max(V1) = 111.00 \cdot lbf$ $\quad Fa_i := forces_{i,7} \cdot lbf$ $\quad max(Fa) = 120.00 \cdot lbf$

$V2_i := forces_{i,6} \cdot lbf$ $\quad max(V2) = 7 \cdot lbf$ $\quad T_i := forces_{i,8} \cdot in \cdot lbf$ $\quad max(T) = 185 \cdot in \cdot lbf$

$M1a_i := forces_{i,3} \cdot in \cdot lbf$ $\quad M2a_i := forces_{i,4} \cdot in \cdot lbf$

$M1b_i := forces_{i,10} \cdot in \cdot lbf$ $\quad M2b_i := forces_{i,11} \cdot in \cdot lbf$

$$M1_i := \begin{cases} M1a_i & \text{if } |M1a_i| \ge |M1b_i| \\ M1b_i & \text{otherwise} \end{cases} \qquad M2_i := \begin{cases} M2a_i & \text{if } |M2a_i| \ge |M2b_i| \\ M2b_i & \text{otherwise} \end{cases}$$

$max(M1) = 176.00 \cdot in \cdot lbf$ $\quad max(M2) = 114.00 \cdot in \cdot lbf$

$min(M1) = -251.00 \cdot in \cdot lbf$ $\quad min(M2) = -293.00 \cdot in \cdot lbf$

Stresses

$$\sigma_i := \frac{|Fa_i|}{Area} + \frac{|M1_i| \cdot cz}{Iy} + \frac{|M2_i| \cdot cy}{Iz} \qquad max(\sigma) = 1688 \cdot psi$$ *Axial plus Bending*

$$\sigma v_i := \sqrt{\left(\frac{V1_i}{Area}\right)^2 + \left(\frac{V2_i}{Area}\right)^2} \qquad max(\sigma v) = 67 \cdot psi$$ *Shear Due to Transverse*

$$\sigma t_i := |T_i| \cdot \frac{r}{J} \qquad max(\sigma t) = 349 \cdot psi$$ *Shear Due To Torsion*

$$\sigma := \sigma v + \sigma t \qquad max(\sigma) = 398 \cdot psi$$ *Combined Shear*

$$\sigma p_{i,1} := \frac{\sigma_i}{2} + \left[\left(\frac{\sigma_i}{2}\right)^2 + (\sigma_i)^2\right]^{\frac{1}{2}} \qquad \sigma p_{i,2} := \frac{\sigma_i}{2} - \left[\left(\frac{\sigma_i}{2}\right)^2 + (\sigma_i)^2\right]^{\frac{1}{2}}$$ *Principal Stresses*

$$f_{tu} := max\left(\overrightarrow{|\sigma p|}\right) = 1688.37\,psi$$ *Maximum Absolute Principal*

$$\overline{max\left(\sigma p^{\langle 1 \rangle}\right)} = 1688 \cdot psi$$ *Maximum Principal*

$$\sigma vm_i := \sqrt{(\sigma p_{i,1})^2 + (\sigma p_{i,2})^2 - \sigma p_{i,1} \cdot \sigma p_{i,2}} \qquad f_{ty} := max(\sigma vm) = 1688.40\,psi$$ *Von-Mises*

$$\tau max_i := \sqrt{\frac{1}{4}\cdot(\tau_i)^2 + (\tau_i)^2}$$

$$f_{su} := \max(\tau max) = \mathbf{844.22}\,psi$$ *Maximum Shear*

Margins of Safety - Capture Bar at Section A-A, Flight Loads

$$MS_{tu} := \left(\frac{F_{tu}\cdot\beta}{FS_u\cdot f_{tu}}\right) - \mathbf{1} = \mathbf{38.80}$$ *Tensile Ultimate*

$$MS_{ty} := \left(\frac{F_{ty}\cdot\beta}{FS_y\cdot f_{ty}}\right) - \mathbf{1} = \mathbf{42.21}$$ *Tensile Yield*

$$MS_{su} := \left(\frac{F_{su}\cdot\beta}{FS_u\cdot f_{su}}\right) - \mathbf{1} = \mathbf{50.74}$$ *Shear Ultimate*

Check Capture Bar at Section A-A, Landing Loads

Loads

Forces and moments for the beam elements used for the capture bar are in the file beams-landing.txt

$forces := READPRN(\text{"beams-landing.txt"})$ $\quad i := 1 .. rows(forces)$

$V1_i := forces_{i,5} \cdot lbf$ $\quad max(V1) = 82.00 \cdot lbf$ $\quad Fa_i := forces_{i,7} \cdot lbf$ $\quad max(Fa) = 150.00 \cdot lbf$

$V2_i := forces_{i,6} \cdot lbf$ $\quad max(V2) = 17 \cdot lbf$ $\quad T_i := forces_{i,8} \cdot in \cdot lbf$ $\quad max(T) = 131 \cdot in \cdot lbf$

$M1a_i := forces_{i,3} \cdot in \cdot lbf$ $\quad M2a_i := forces_{i,4} \cdot in \cdot lbf$

$M1b_i := forces_{i,10} \cdot in \cdot lbf$ $\quad M2b_i := forces_{i,11} \cdot in \cdot lbf$

$$M1_i := \begin{cases} M1a_i & \text{if } |M1a_i| \ge |M1b_i| \\ M1b_i & \text{otherwise} \end{cases} \qquad M2_i := \begin{cases} M2a_i & \text{if } |M2a_i| \ge |M2b_i| \\ M2b_i & \text{otherwise} \end{cases}$$

$max(M1) = 222.00 \cdot in \cdot lbf$ $\quad max(M2) = 56.00 \cdot in \cdot lbf$

$min(M1) = -430.00 \cdot in \cdot lbf$ $\quad min(M2) = -209.00 \cdot in \cdot lbf$

Stresses

$$\sigma_i := \frac{|Fa_i|}{Area} + \frac{|M1_i| \cdot cz}{Iy} + \frac{|M2_i| \cdot cy}{Iz} \qquad max(\sigma) = 2005 \cdot psi$$ *Axial plus Bending*

$$\sigma v_i := \sqrt{\left(\frac{V1_i}{Area}\right)^2 + \left(\frac{V2_i}{Area}\right)^2} \qquad max(\sigma v) = 48 \cdot psi$$ *Shear Due to Transverse*

$$\sigma t_i := |T_i| \cdot \frac{r}{J} \qquad max(\sigma t) = 237 \cdot psi$$ *Shear Due To Torsion*

$$\sigma := \sigma v + \sigma t \qquad max(\sigma) = 246 \cdot psi$$ *Combined Shear*

$$\sigma p_{i,1} := \frac{\sigma_i}{2} + \left[\left(\frac{\sigma_i}{2}\right)^2 + (\sigma_i)^2\right]^{\frac{1}{2}} \qquad \sigma p_{i,2} := \frac{\sigma_i}{2} - \left[\left(\frac{\sigma_i}{2}\right)^2 + (\sigma_i)^2\right]^{\frac{1}{2}}$$ *Principal Stresses*

$$f_{tu} := max\left(\overrightarrow{|\sigma p|}\right) = 2005.24 \, psi$$ *Maximum Absolute Principal*

$$\overline{max\left(\sigma p^{\langle 1 \rangle}\right)} = 2005 \cdot psi$$ *Maximum Principal*

$$\sigma vm_i := \sqrt{(\sigma p_{i,1})^2 + (\sigma p_{i,2})^2 - \sigma p_{i,1} \cdot \sigma p_{i,2}} \qquad f_{ty} := max(\sigma vm) = 2005.28 \, psi$$ *Von-Mises*

$$\tau max_i := \sqrt{\frac{1}{4}\cdot(\tau_i)^2 + (\tau_i)^2}$$

$$f_{su} := \max(\tau max) = \mathbf{1002.67}\ \text{psi}$$ *Maximum Shear*

Margins of Safety - Capture Bar at Section A-A, Landing Loads

$$MS_{tu} := \left(\frac{F_{tu}\cdot\beta}{FS_u\cdot f_{tu}}\right) - \mathbf{1} = \mathbf{32.51}$$ *Tensile Ultimate*

$$MS_{ty} := \left(\frac{F_{ty}\cdot\beta}{FS_y\cdot f_{ty}}\right) - \mathbf{1} = \mathbf{35.38}$$ *Tensile Yield*

$$MS_{su} := \left(\frac{F_{su}\cdot\beta}{FS_u\cdot f_{su}}\right) - \mathbf{1} = \mathbf{42.56}$$ *Shear Ultimate*

4.11.2 Handle Base

Section 4.11.2 PAS Handle Base

Handle Base, SDG39135851, is made of 15-5 PH and is good by engineering judgement, based upon the 50 lbf load and the significant cross section.

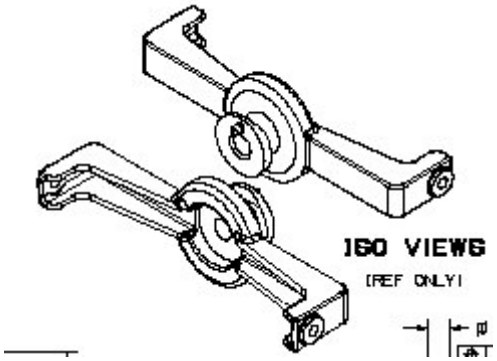

Capture bar threaded portion is a 1/2-20 thread, and will also be good for the 50 lbf load.

The capture bar threaded portion threads into the handle base. This analysis is performed in Section 4.12.4 of this report.

4.11.3 Handle Extension Assembly

Section 4.11.3 PAS Handle Extension

Check Handle Extension, SDG39135853

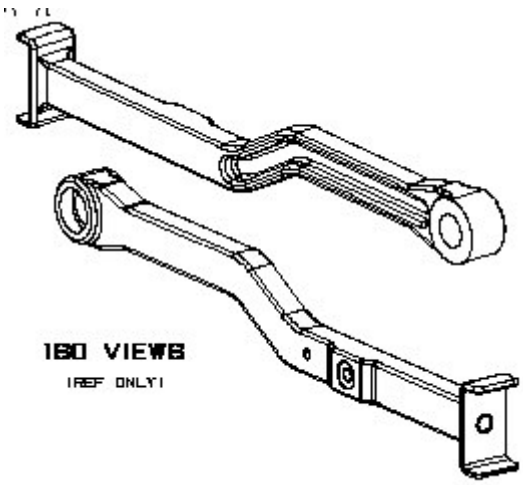

Material properties--6061-T651 plate

Temperature reduction $\beta := .96$

Tensile allowable, ultimate, and yield $Ftu := 42000 \cdot psi \cdot \beta$ $Fty := 35000 \cdot psi \cdot \beta$

Shear allowable $Fsu := 27000 \cdot psi \cdot \beta$

Factors of Safety $FSu := 2.0$ $FSy := 1.25$

Moment will be carried by the extension until it contacts the camera mounting bracket.

Section Properties: Section A-A
Cross section is a rectangle

Width of base: $b := .5 \cdot in$

Height: $h := .75 \cdot in$

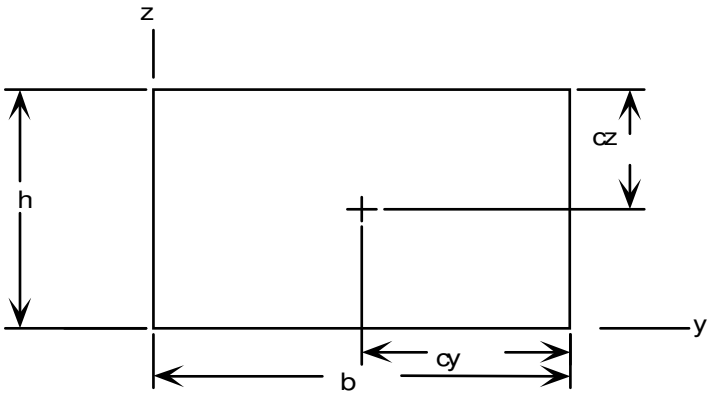

Area is: $Area := b \cdot h$ $Area = 0.375 \cdot in^2$

Distance to centroid is: $yc := \frac{b}{2}$ $yc = 0.25 \cdot in$

$zc := \frac{h}{2}$ $zc = 0.375 \cdot in$

Distance from centroid to outer fiber: $cy := yc$ $\quad cy = 0.25 \cdot in$

$cz := zc$ $\quad cz = 0.375 \cdot in$

Moments of inertia about centroid: $Iy := \frac{b \cdot h^3}{12}$ $\quad Iy = 0.018 \cdot in^4$

$Iz := \frac{h \cdot b^3}{12}$ $\quad Iz = 7.812 \times 10^{-3} \cdot in^4$

Torsional constant:

$$J := \begin{cases} \frac{b \cdot h^3}{3} \cdot \left(1 - .063 \cdot \frac{h}{b} + .052 \cdot \frac{h^5}{b^5}\right) & \text{if } b \geq h \\ \frac{h \cdot b^3}{3} \cdot \left(1 - .063 \cdot \frac{b}{h} + .052 \cdot \frac{b^5}{h^5}\right) & \text{otherwise} \end{cases}$$

$J = 0.03 \cdot in^4$

Stresses on cross section:

Assume that the maximum handle load is: $Handle_force := 50 \cdot lbf$

$length := 9.034 \cdot in$

If handle is treated as a simple beam (worst case for handle itself): $M := \frac{Handle_force \cdot length}{4}$ $\quad M = 113 \cdot in \cdot lbf$

Normal is direct axial plus bending: $uh := \frac{|M| \cdot cy}{Iz} + \frac{Handle_force}{Area}$ $\quad uh = 3747 \cdot psi$

Shear due to transverse loading $vh := 0 \cdot psi$ $\quad vh = 0 \cdot psi$

Shear due to torsion: $th := 0 \cdot psi$ $\quad th = 0 \cdot psi$

Combined shear: $h := vh + th$ $\quad h = 0 \cdot psi$

Principal Stresses:

$$uph_1 := \frac{uh}{2} + \left[\left(\frac{uh}{2}\right)^2 + h^2\right]^{\frac{1}{2}} \qquad uph_1 = 3747 \cdot psi$$

$$uph_2 := \frac{uh}{2} - \left[\left(\frac{uh}{2}\right)^2 + h^2\right]^{\frac{1}{2}} \qquad uph_2 = 0 \cdot psi$$

Maximum principal stress is: $umaxh := \max\left(\overrightarrow{|uph|}\right)$ $umaxh = 3747 \cdot psi$

Von-Mises Stress: $uvmh := \sqrt{\left(uph_1\right)^2 + \left(uph_2\right)^2 - uph_1 \cdot uph_2}$ $uvmh = 3747 \cdot psi$

Maximum shear: $maxh := \sqrt{\frac{1}{4} \cdot uh^2 + \ h^2}$ $maxh = 1873 \cdot psi$

Margins of safety:

Ultimate $MSu := \left(\frac{Ftu}{FSu \cdot umaxh}\right) - 1$ $MSu = 4.38$

Ultimate, shear $MSsu := \left(\frac{Fsu}{FSu \cdot \ maxh}\right) - 1$ $MSsu = 5.918$

Yield (using von-Mises) $MSy := \left(\frac{Fty}{FSy \cdot uvmh}\right) - 1$ $MSy = 6.174$

4.11.4 Handle

Section 4.11.4 PAS Handle

Handle, SDG39135854 in Assembly SEG39135849

$FSu := 2.0$ $FSy := 1.25$

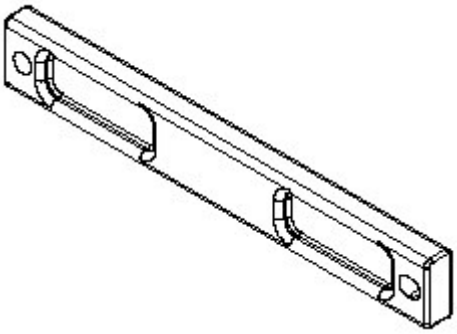

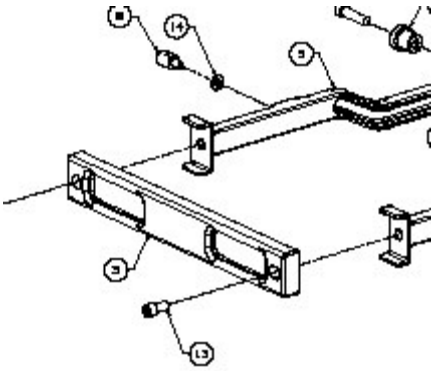

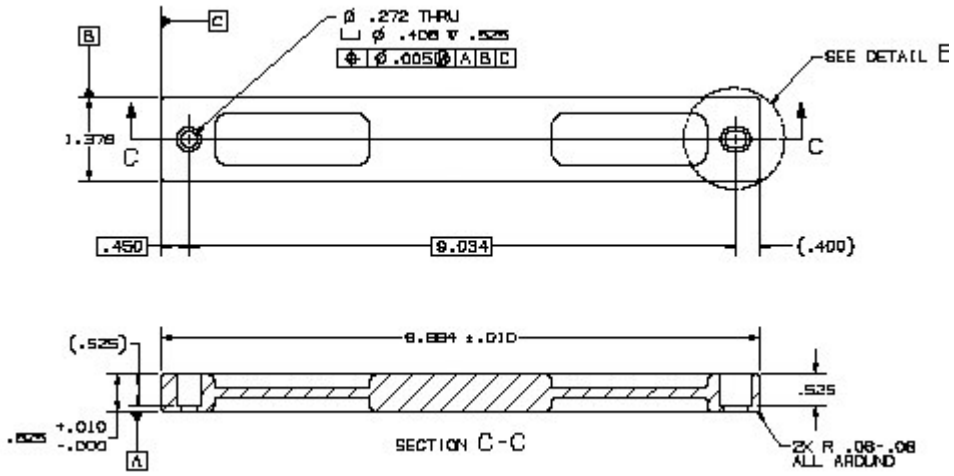

Assume that the maximum handle load is: $Handle_force := 50 \cdot lbf$

$length := 9.034 \cdot in$

If handle is treated as a simple beam (worst case for handle itself): $M := \frac{Handle_force \cdot length}{4}$ $M = 113 \cdot in \cdot lbf$

Section Properties: Section A-A
Cross section is a rectangle

Width of base: $b := .625 \cdot in$

Height: $h := 1.376 \cdot in$

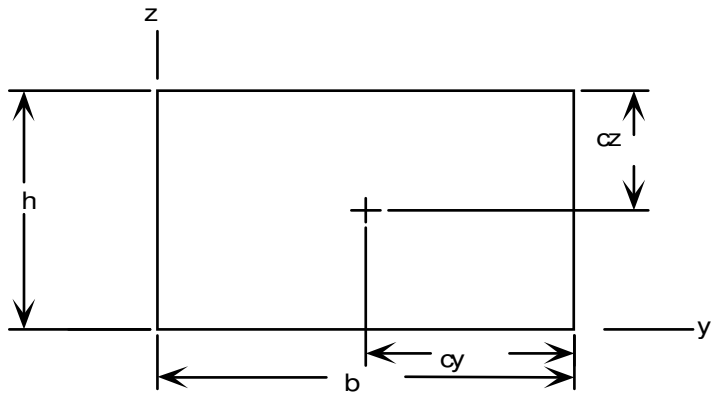

Area is: $Area := b \cdot h$ $\quad Area = 0.86 \cdot in^2$

Distance to centroid is: $yc := \frac{b}{2}$ $\quad yc = 0.313 \cdot in$

$zc := \frac{h}{2}$ $\quad zc = 0.688 \cdot in$

Distance from centroid to outer fiber: $cy := yc$ $\quad cy = 0.313 \cdot in$

$cz := zc$ $\quad cz = 0.688 \cdot in$

Moments of inertia about centroid: $Iy := \frac{b \cdot h^3}{12}$ $\quad Iy = 0.136 \cdot in^4$

$Iz := \frac{h \cdot b^3}{12}$ $\quad Iz = 0.028 \cdot in^4$

Torsional constant:

$$J := \begin{cases} \frac{b \cdot h^3}{3} \cdot \left(1 - .063 \cdot \frac{h}{b} + .052 \cdot \frac{h^5}{b^5}\right) & \text{if } b \ge h \\ \frac{h \cdot b^3}{3} \cdot \left(1 - .063 \cdot \frac{b}{h} + .052 \cdot \frac{b^5}{h^5}\right) & \text{otherwise} \end{cases}$$

$J = 0.109 \cdot in^4$

Stresses on cross section:

Normal is direct axial plus bending: $\beta h := \frac{|M| \cdot cy}{Iz}$ $\beta h = 1261 \cdot psi$

Shear due to transverse loading $uvh := \sqrt{\left(\frac{Handle_force}{Area}\right)^2}$ $uvh = 58.14 \cdot psi$

Shear due to torsion: $uth := 0 \cdot psi$ $uth = 0 \cdot psi$

Combined shear: $uh := uvh + uth$ $uh = 58.14 \cdot psi$

Principal Stresses: $\beta ph_1 := \frac{\beta h}{2} + \left[\left(\frac{\beta h}{2}\right)^2 + uh^2\right]^{\frac{1}{2}}$ $\beta ph_1 = 1263 \cdot psi$

$\beta ph_2 := \frac{\beta h}{2} - \left[\left(\frac{\beta h}{2}\right)^2 + uh^2\right]^{\frac{1}{2}}$ $\beta ph_2 = -3 \cdot psi$

Maximum principal stress is: $\beta maxh := \max\left(\overrightarrow{|\beta ph|}\right)$ $\beta maxh = 1263 \cdot psi$

Von-Mises Stress: $\beta vmh := \sqrt{(\beta ph_1)^2 + (\beta ph_2)^2 - \beta ph_1 \cdot \beta ph_2}$ $\beta vmh = 1265 \cdot psi$

Maximum shear: $umaxh := \sqrt{\frac{1}{4} \cdot \beta h^2 + uh^2}$ $umaxh = 633 \cdot psi$

Material properties--6061-T651 plate $:= .90$ temperature effect for 140 deg F

Tensile allowable, ultimate and yield $Ftu := 42000 \cdot psi$ $Fty := 35000 \cdot psi$

Shear allowable $Fsu := 27000 \cdot psi$

Margins of safety:

Ultimate $MSu := \left(\frac{Ftu}{FSu \cdot \beta maxh}\right) - 1$ $MSu = 13.962$

Ultimate, shear $MSsu := \left(\frac{Fsu}{FSu \cdot umaxh}\right) - 1$ $MSsu = 18.196$

Yield (using von-Mises) $MSy := \left(\frac{Fty}{FSy \cdot \beta vmh}\right) - 1$ $MSy = 18.928$

Now, assume one fastener fails, and treat handle as a cantilever. Moment is worst at the thinned out area

$M := Handle_force \cdot \frac{length}{2}$

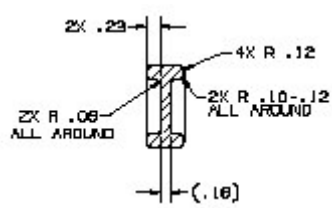

Section Properties:
Cross section is an I-beam

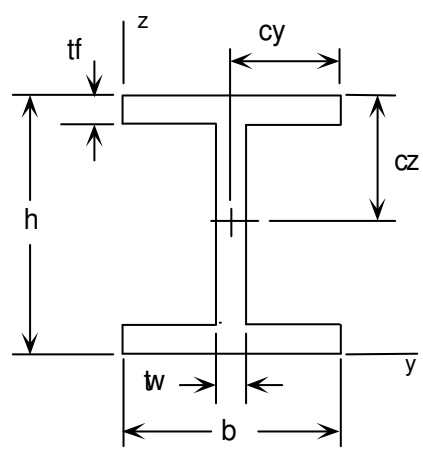

Width of base flange: $b := .625 \cdot in$

Height: $h := 1.376 \cdot in$

Flange thickness: $tf := .25 \cdot in$

Web thickness: $tw := .16 \cdot in$

Define: $d := h - tf$ $f := h - 2 \cdot tf$

Area is: $Area := 2 \cdot b \cdot tf + f \cdot tw$ $Area = 0.453 \cdot in^2$

Distances to centroid are: $yc := \frac{1}{2} \cdot b$ $\quad zc := \frac{1}{2} \cdot h$

Distance from centroid to outer fiber: $cy := yc$ $\quad cy = 0.313 \cdot in$

$cz := zc$ $\quad cz = 0.688 \cdot in$

Moments of inertia about centroid: $Iy := \frac{1}{12} \cdot \left[b \cdot h^3 - (b - tw) \cdot f^3 \right]$ $\quad Iy = 0.11 \cdot in^4$

$Iz := \frac{1}{12} \cdot \left(f \cdot tw^3 + 2 \cdot tf \cdot b^3 \right)$ $\quad Iz = 0.01 \cdot in^4$

Torsional constant: $J := \frac{1}{3} \cdot \left(2 \cdot b \cdot tf^3 + d \cdot tw^3 \right)$ $\quad J = 8.048 \times 10^{-3} \cdot in^4$

Stresses on cross section:

Normal is direct axial plus bending: $\beta h := \frac{|M| \cdot cy}{Iz}$ $\quad \beta h = 6740 \cdot psi$

Shear due to transverse loading $uvh := \sqrt{\left(\frac{Handle_force}{Area} \right)^2}$ $\quad uvh = 110 \cdot psi$

Shear due to torsion: $uth := 0 \cdot psi$ $\quad uth = 0 \cdot psi$

Combined shear: $uh := uvh + uth$ $\quad uh = 110 \cdot psi$

Principal Stresses: $\beta ph_1 := \frac{\beta h}{2} + \left[\left(\frac{\beta h}{2} \right)^2 + uh^2 \right]^{\frac{1}{2}}$ $\quad \beta ph_1 = 6742 \cdot psi$

$\beta ph_2 := \frac{\beta h}{2} - \left[\left(\frac{\beta h}{2} \right)^2 + uh^2 \right]^{\frac{1}{2}}$ $\quad \beta ph_2 = -1.81 \cdot psi$

Maximum principal stress is: $\beta maxh := \max\left(\overrightarrow{|\beta ph|} \right)$ $\quad \beta maxh = 6742 \cdot psi$

Von-Mises Stress: $\beta vmh := \sqrt{(\beta ph_1)^2 + (\beta ph_2)^2 - \beta ph_1 \cdot \beta ph_2}$ $\beta vmh = 6743 \cdot psi$

Maximum shear: $umaxh := \sqrt{\frac{1}{4} \cdot \beta h^2 + uh^2}$ $umaxh = 3372 \cdot psi$

Margins of safety:

Ultimate $MSu := \left(\frac{Ftu}{FSu \cdot \beta maxh}\right) - 1$ $MSu = 1.803$

Ultimate, shear $MSsu := \left(\frac{Fsu}{FSu \cdot umaxh}\right) - 1$ $MSsu = 2.603$

Yield (using von-Mises) $MSy := \left(\frac{Fty}{FSy \cdot \beta vmh}\right) - 1$ $MSy = 2.737$

Note, we used FSu = 2.0. This is conservative, since a fastener has failed.

4.12PAS Bolt Analysis

Section 4.12 PAS Bolt Analysis

The PAS Bolt Analysis is performed in the following report sections.

4.12.1	Handle Assembly Bolted Interfaces
4.12.2	PAS Handle to PAS Handle Extension
4.12.3	Handle Extension to Handle Base
4.12.4	Handle Base to Capture Bar
4.12.5	PAS Guide Pin Bolted Interface
4.12.5.1	PAS Guide Pin to PAS Base
4.12.5.1	PAS Guide Pin to PAS Base Fail Safe
4.12.6	Vertex Bracket to PAS Platform Bolted Interface
4.12.6.1	Vertex Bracket to PAS Platform
4.12.6.1	Vertex Bracket to PAS Platform Fail Safe
4.12.6.2	Vertex Bracket to PAS Platform Shear Bolt Analysis
4.12.6.2	Vertex Bracket to PAS Platform Shear Bolt Analysis - Fail Safe
4.12.7	Aft Brackets to PAS Platform Bolted Interface
4.12.7.1	Aft Brackets to PAS Platform
4.12.7.1	Aft Brackets to PAS Platform Fail Safe
4.12.7.2	Aft Brackets to PAS Platform Shear Bolt Analysis
4.12.7.2	Aft Brackets to PAS Platform Shear Bolt Analysis - Fail Safe
4.12.8	BCS Avionics Bracket to Bridge Assembly
4.12.9	Vertex Bracket to Lower USS-02 Bolted Interface
4.12.9.1	Vertex Bracket to Lower USS-02 Assembly
4.12.9.1	Vertex Bracket to Lower USS-02 Assembly Fail Safe
4.12.10	Aft Bracket to Lower USS-02 Bolted Interface
4.12.10.1	Aft Brackets to Lower USS-02 Assembly
4.12.10.1	Aft Brackets to Lower USS-02 Assembly Fail Safe

4.12.1 Handle Assembly Bolted Interfaces

Section 4.12.1 Handle Assembly Bolted Interfaces

The Handle Assembly Bolt Analysis is performed in the following report sections.

4.12.2	PAS Handle to PAS Handle Extension
4.12.3	Handle Extension to Handle Base
4.12.4	Handle Base to Capture Bar

4.12.2 PAS Handle to PAS Handle Extension

4.12.2 PAS Handle to PAS Handle Extension Bolt Analysis

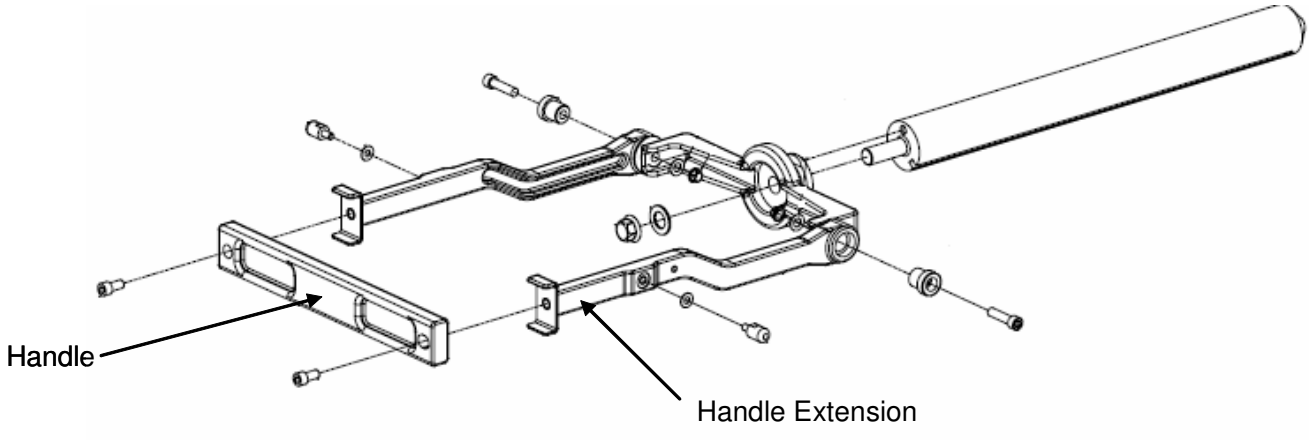

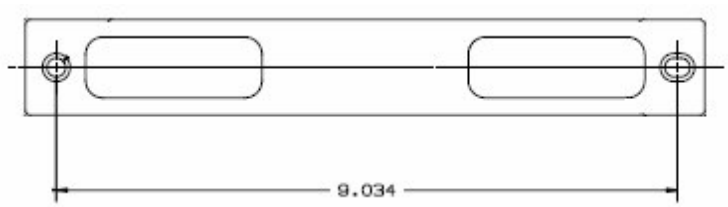

$length := 9.034 \cdot in$

Assume that the maximum handle load is: $Handle_force := 50 \cdot lbf$

Now, assume one fastener fails, and treat handle as a cantilever. Moment is worst at the thinned out area

$$M := Handle_force \cdot \frac{length}{2}$$

Now, check fastener. Joint has to take moment, which will be coupled out heel toe

The Mapp moment will be assumed to couple out in a heel-toe effect. The moment arm will be 2/3 of the dl1 distance, as shown in the figure.

$dl1 := .45 \cdot in$

Now, the tension will be

$$Ften := \frac{M}{\left(\frac{2}{3} \cdot dl1\right)}$$

$Ften = 753 \cdot lbf$

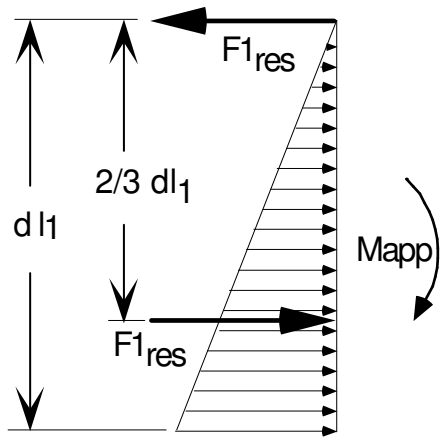

CHECK BOLTS (NAS1351N4-8 bolts 0.25-28UNRF-3A, Material-A-286), Insert MS21209F4-20L

Flange 1: PAS Handle
Part number: SDG39135854
Material: 6061-T651

Flange 2: PAS Handle Extension
Part number: SDG39135853
Material: 6061-T651

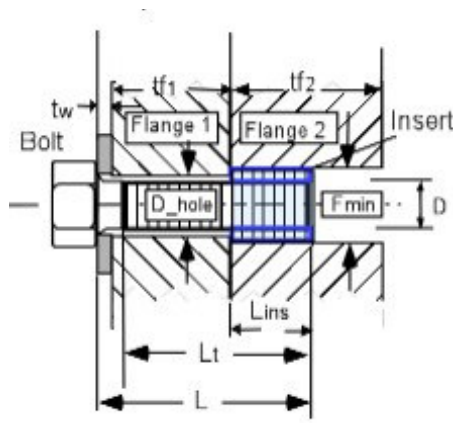

Loads

$P := Handle_force + Ften$

Applied tensile load $P = 802.8 \cdot lbf$

Applied shear load $V := 0 \cdot lbf$

Applied bending moment $M := 0 \cdot in \cdot lbf$

Factors of Safety

Ultimate $SFu := 2.0$ Yield $SFy := 1.25$

Joint Separation $SFsep := 1.2$ Fitting factor $FF := 1.15$

Temperature data
(Ref. Appendix C2)

Assembly $Temp_initial := 70 \cdot deg$

Maximum $Temp_max := 149 \cdot deg$

Minimum $Temp_min := -27 \cdot deg$

Bolt and Insert Data

Nominal diameter of bolt $D := 0.250 \cdot in$

Number of threads/inch $Nt := 28 \cdot \frac{1}{in}$

Total length of bolt $L := .500 \cdot in$

Length of insert $Lins := 0.500 \cdot in$

Threaded length $Lt := .50 \cdot in$

Min. external diameter of insert $Fmin := 0.306 \cdot in$

(If bolt is fully threaded, input Lt = L)

Depth of recess for insert $lr := 0.02 \cdot in$

This file uses the calculations shown in \\escfil02\2i11_mathcad\8307_bolts\thread_data.mcd

Tue Feb 15 10:38:17 AM 2005

Washer Data

Thickness of washer $tw := 0 \cdot in$

Outer Diameter of washer $Dw := 0in$

Inner Diameter of washer $Dwi := 0 \cdot in$

Bolt head dia. across flats $dw := 0.365 \cdot in$
(used only if there is no washer)

Flange data

Thickness of flange 1 $tf1 := .100 \cdot in$
(Ref. SDG39135854)

Thickness of flange 2 $tf2 := .500in$ (insert length)
(Ref. SDG39135853)

Diameter of hole $D_hole := 0.272 \cdot in$

Material Property Data

Bolt

Temperature correction factor for bolt strength ultimate (Ref. MIL-HDBK-5J, fig. 6.2.1.1.1) $TSu_bolt := .97$ yield $TSy_bolt := .97$

Bolt ultimate tensile allowable stress $Ftu_bolt := 160000 \cdot psi$

Bolt ultimate shear allowable stress $Fsu_bolt := 0.6 \cdot Ftu_bolt$

Bolt yield tensile allowable $Fty_bolt := 120000 \cdot psi$

Temperature correction factor for bolt modulus (Ref. MIL-HDBK-5J, fig. 6.2.1.1.4(a)) $TE_bolt := .97$

Modulus of elasticity of bolt $E_bolt := \left(29.1 \cdot 10^{6} \cdot psi\right)$ (Ref. MIL-HDBK-5J, table 6.2.1.0(b))

Thermal coeffecient for bolt: (Ref. MIL-HDBK-5J, fig. 6.2

$$\beta_bolt_hot := 9.1 \cdot 10^{-6} \cdot \frac{\frac{in}{in}}{deg}$$

$$\beta_bolt_cold := 8.9 \cdot 10^{-6} \cdot \frac{\frac{in}{in}}{deg}$$

Insert

Temperature correction factor for insert strength (Ref. MIL-HDBK-5J, fig. 6.2.1.1.1) $TS_ins := .97$

Ultimate tensile allowable stress $Ftu_ins := 150000 \cdot psi$ (Ref. NASM8846)

Ultimate shear allowable stress $Fsu_ins := 0.6 \cdot Ftu_ins$

Washer

Temperature correction factor for washer modulus $TE_washer := .97$ (Ref. MIL-HDBK-5J, fig. 6.2.1.1.1)

Modulus of elasticity of washer $E_washer := \left(29.1 \cdot 10^{6} \cdot psi\right)$ (Ref. MIL-HDBK-5J, table 6.2.1.0(b))

Flanges

Stiffness of the joint depends upon number of members in the grip of the fasteners, Modulus of elasticity of these members, and diameters of the bolt and the washer.

Temperature correction factor for flange 1 $Tf1E := .99$ (modulus) $Tf2s := .95$ (strength)

Temperature correction factor for flange 2 $Tf2E := .99$ (modulus) $Fsu_f2 := 27000 \cdot psi$

(Ref. MIL-HDBK-5J Figure 3.6.2.2.1(a) and 3.6.2.2.4)

Modulus of elasticity for the parts in the joint $E_flange1 := \left(9.9 \cdot 10^{6} \cdot psi\right)$ $E_flange2 := \left(9.9 \cdot 10^{6} \cdot psi\right)$

(Ref. MIL-HDBK-5J Table 3.6.2.0(b2))

Coefficient of thermal expansion for flanges $\beta_flange1_hot := 12.7 \cdot 10^{-6} \cdot \frac{\frac{in}{in}}{deg}$ $\beta_flange2_hot := 12.7 \cdot 10^{-6} \cdot \frac{\frac{in}{in}}{deg}$

(Ref. MIL-HDBK-5J Figure 3.6.2.0)

$\beta_flange1_cold := 12.4 \cdot 10^{-6} \cdot \frac{\frac{in}{in}}{deg}$ $\beta_flange2_cold := 12.4 \cdot 10^{-6} \cdot \frac{\frac{in}{in}}{deg}$

Torque/Preload data

(Ref. SDG39135849)

Maximum torque $Tmax := 97.3 \cdot in \cdot lbf$

Minimum torque $Tmin := 82.7 \cdot in \cdot lbf$

Torque coefficient: $k := 0.15$

Loading plane factor: $n := .5$

Preload Uncertainty: $u := 0.25$

Bolt Load data

Bolt/joint stiffness factor	$= 0.523$	Preload due to temperature	$Pthr_pos = 217.9 \cdot lbf$
Max. preload	$PLDmax = 3461.2 \cdot lbf$		$Pthr_neg = -260.1 \cdot lbf$
Min. preload	$PLDmin = 1231.8 \cdot lbf$	Uncertainty factor	$u = 0.25$
Joint separation load	$Psep = 963.4 \cdot lbf$	Torque coefficient	$k = 0.15$
Max. load on the bolt(ultimate)	$Pb = 3944.2 \cdot lbf$	Loading plane factor	$n = 0.5$
Max. load on the bolt(yield)	$Pby = 3763.1 \cdot lbf$	Thread shear pullout load of bolt or insert	$Pths = 11818.5 \cdot lbf$
Bolt ultimate tensile strength	$PAt = 5475.9 \cdot lbf$	Thread shear pullout load in parent metal	$Ppths = 6164.5 \cdot lbf$

Length_check = "Bolt length is sufficient"

Summary of Margins for bolt:

Joint separation	$MS_1 = 0.506$	Direct Thread shear Ultimate	$MS_6 = 2.34$
Direct Tension Ultimate	$MS_2 = 1.97$	Total Thread shear Ultimate	$MS_7 = 0.56$
Direct Tension Yield	$MS_3 = 2.56$	Shear Ultimate	$MS_8 = 10$
Total Tension Ultimate	$MS_4 = 0.388$	Bending Ultimate	$MS_9 = 10$
Total Tension Yield	$MS_5 = 0.091$	Combined shear, tension and bending ultimate	$MS_{10} = 0.388$

Determination of the smallest margin of safety for the bolt, and the failure mode:

$MSbolt := \min(MS)$

$MSbolt = 0.091$ Failure_Mode = "Total Tension Yield"

4.12.3 Handle Extension to Handle Base

4.12.3 PAS Handle Extension to Handle Base Bolt Analysis

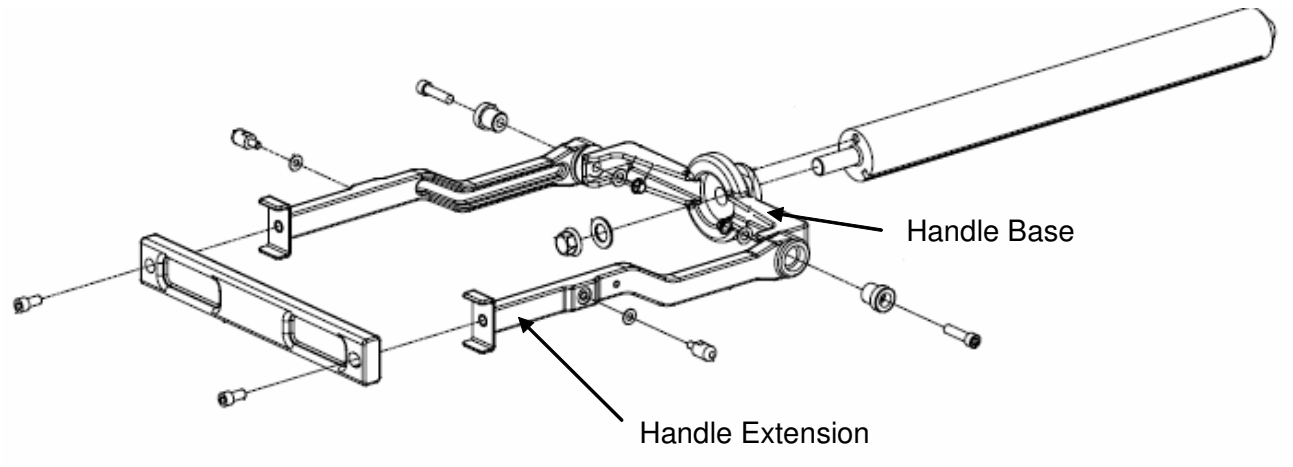

Assume that the maximum handle load is: $Handle_force := 50 \cdot lbf$

Assume one bolt takes the entire load.

Note, moment has been coupled out into the camera bracket.

Prepared By	Name	Date	Engineering and Science Contract Group	File Name
	Brent Dyer	06/07/06		Hdlext_hdlbase.mcd
Checked By	C. Bala		*Structural Analysis Section*	Draw ing No. SEG39135849
Title	PAS Handle Extension to Handle Base Bolt Analysis			

CHECK BOLTS (NAS1351N-16 0.250"-28 x 1.0 L Material-A-286), Nut NAS1291C4M, Washer NAS1149E0432R

Flange 1: PAS Handle Extension
(Handle Bushing)
Part number: SDG39135852
Material: Aluminum Bronze AMS 4640

Flange 2: Pas Handle Base
Part number: SEG39135851
Material: CRES 15-5PH H1025 AMS 5659

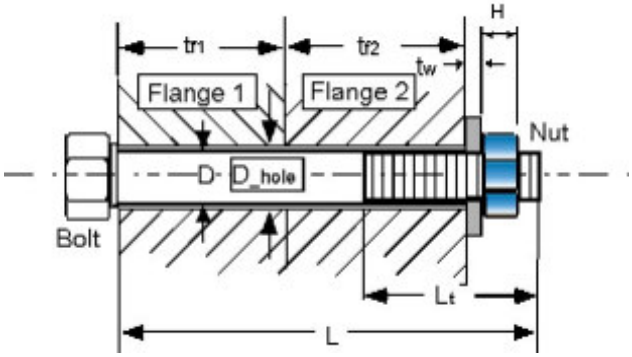

Loads

Applied tensile load $P := 0lbf$

Applied shear load $V := 50lbf$

Applied bending moment $M := 0in \cdot lbf$

Factors of Safety

Ultimate $SFu := 2.0$ Yield $SFy := 1.25$

Joint Separation $SFsep := 1.2$ Fitting factor $FF := 1.15$

Temperature data
(Ref. Appendix C2)

Assembly $Temp_initial := 70 \cdot deg$

Maximum $Temp_max := 183 \cdot deg$

Minimum $Temp_min := -27 \cdot deg$

Bolt and Nut Data

Nominal diameter of bolt $D := .250 \cdot in$

Number of threads/inch $Nt := 28 \cdot \frac{1}{in}$

Total length of bolt $L := 1.0 \cdot in$

Height of nut $H := 0.204 \cdot in$

Threaded length $Lt := 1.0 \cdot in$

(If bolt is fully threaded, input Lt = L)

This file uses the calculations shown in \\escfil02\2i11_mathcad\8307_bolts\thread_data.mcd

Tue Feb 15 10:54:02 AM 2005

Washer Data

Thickness of washers $tw := 0.032 \cdot in$

Outer Diameter of washer $Dw := 0.500in$

Inner Diameter of washer $Dwi := 0.265 \cdot in$

Bolt head dia. across flats $dw := 0.365 \cdot in$ (used only if there is no washer)

Flange data

Thickness of flange 1 (Ref. SDG39135852) $tf1 := .475 \cdot in$

Thickness of flange 2 (Ref. SDG39135851) $tf2 := 0.25in$

Diameter of hole $D_hole := 0.264 \cdot in$

Material Property Data

Bolt

Temperature correction factor for bolt strength ultimate. (Ref. MIL-HDBK-5J, fig. 6.2.1.1.1) $TSu_bolt := .95$ Yield $TSy_bolt := .95$

Bolt ultimate tensile allowable stress $Ftu_bolt := 160000 \cdot psi$

Bolt ultimate shear allowable stress $Fsu_bolt := 0.6 \cdot Ftu_bolt$

Bolt yield Tensile allowable stress $Fty_bolt := 120000 \cdot psi$

Temperature correction factor for bolt modulus (Ref. MIL-HDBK-5J, fig. 6.2.1.1.4(a)) $TE_bolt := .95$

Modulus of elasticity of bolt (Ref. MIL-HDBK-5J, table 6.2.1.0(b)) $E_bolt := \left(29.1 \cdot 10^{6} \cdot psi\right)$

Thermal coeffecient for bolt (Ref. MIL-HDBK-5J, fig. 6.2.1.0) $\beta_bolt_hot := 9.1 \cdot 10^{-6} \cdot \frac{\frac{in}{in}}{deg}$

Nut

Temperature correction factor for nut strength $TS_nut := .95$ $\beta_bolt_cold := 8.9 \cdot 10^{-6} \cdot \frac{\frac{in}{in}}{deg}$

Ultimate tensile allowable stress $Ftu_nut := 125000 \cdot psi$

Ultimate Shear allowable stress: $Fsu_nut := 0.6 \cdot Ftu_nut$

Ultimate axial strength of nut $Ptu_nut := 4580 \cdot lbf$ (Ref. NAS1291)

Washer

Temperature correction factor for washer modulus $TE_washer := .95$ (Ref. MIL-HDBK-5J, fig. 6.2.1.1.1)

Modulus of elasticity of washer: $E_washer := \left(29.1 \cdot 10^{6} \cdot psi\right)$ (Ref. MIL-HDBK-5J, table 6.2.1.0(b))

Flanges

Stiffness of the joint depends upon number of members in the grip of the fasteners, Modulus of elasticity of these members, and diameters of the bolt and the washer.

Temperature correction factor for flange 1 $Tf1E := .96$ (modulus) (Ref. Appendix C8 for Flange 1)

Temperature correction factor for flange 2 (Ref. MIL-HDBK-5J Figure 2.6.7.1.4) $Tf2E := .99$ (modulus)

Modulus of elasticity for the parts in the joint (Ref. MIL-HDBK-5J Table 2.6.7.0(b)) $E_flange1 := \left(16 \cdot 10^{6} \cdot psi\right)$ $E_flange2 := \left(28.5 \cdot 10^{6} \cdot psi\right)$

Coefficient of thermal expansion for flanges (Ref. MIL-HDBK-5J Figure 2.6.7.0, use H900 curve) $\beta_flange1_hot := 9.8 \cdot 10^{-6} \cdot \frac{\frac{in}{in}}{deg}$ $\beta_flange2_hot := 5.9 \cdot 10^{-6} \cdot \frac{\frac{in}{in}}{deg}$

$\beta_flange1_cold := 9.1 \cdot 10^{-6} \cdot \frac{\frac{in}{in}}{deg}$ $\beta_flange2_cold := 5.8 \cdot 10^{-6} \cdot \frac{\frac{in}{in}}{deg}$

Torque/Preload data

(Ref. SDG39135849)

Maximum torque $Tmax := 97.3 \cdot in \cdot lbf$

Minimum torque $Tmin := 82.7 in \cdot lbf$

Torque coefficient $k := 0.15$

Loading plane factor $n := .5$

Preload Uncertainty $u := 0.25$

This file uses the calculations shown in \\escfil02\2i11_mathcad\8307_bolts\bolt_stiffness_nut_RevC

Mon Feb 14 12:35:43 2005

Bolt Load data

Bolt/joint stiffness factor	$= 0.15$	Preload due to temperature	$Pthr_pos = 72.2 \cdot lbf$
Max. preload	$PLDmax = 3315.6 \cdot lbf$		$Pthr_neg = -57.8 \cdot lbf$
Min. preload	$PLDmin = 1434 \cdot lbf$	Uncertainty factor	$u = 0.25$
Joint separation load	$Psep = 0 \cdot lbf$	Torque coefficient	$k = 0.15$
Max. load on the bolt(ultimate)	$Pb = 3315.6 \cdot lbf$	Loading plane factor	$n = 0.5$
Max. load on the bolt(yield)	$Pby = 3315.6 \cdot lbf$	Thread pullout strength required to develop full strength of bolt	$PAs = 6435.6 \cdot lbf$
Bolt ultimate tensile strength	$PAt = 4351 \cdot lbf$	Nut ultimate tensile strength	$Ptu_nut = 4351 \cdot lbf$

Length_check = "Bolt length should be increased!"

Note: Bolt length is suffient, one full thread remains past the nut.

Summary of Margins for bolt:

Joint separation	$MS_1 = 10$	Direct Thread shear Ultimate	$MS_6 = 10$
Direct Tension Ultimate	$MS_2 = 10$	Total Thread shear Ultimate	$MS_7 = 0.941$
Direct Tension Yield	$MS_3 = 10$	Shear Ultimate	$MS_8 = 24.82$
Total Tension Ultimate	$MS_4 = 0.312$	Bending Ultimate	$MS_9 = 10$
Total Tension Yield	$MS_5 = 0.213$	Combined shear, tension and bending ultimate	$MS_{10} = 0.312$

Determination of the smallest margin of safety for the bolt, and the failure mode:

$$MSbolt := \min(MS)$$

$MSbolt = 0.213$ Failure_Mode = "Total Tension Yield"

4.12.4 Handle Base to Capture Bar

Section 4.12.4 PAS Handle Base to Capture Bar Bolt Analysis

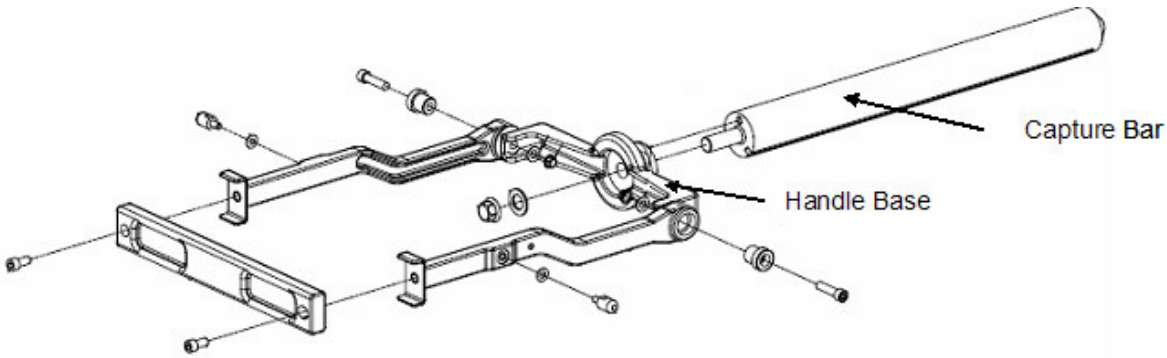

Capture bar threaded portion is a 1/2-20 thread, and will also be good for the 50 lbf load.

Note there is only one fastener holding the handle to the capture bar, so we cannot show the fastener fail safe.

CHECK BOLTS (SDG39135850 0.500-20 A286)
Washer (NAS1149E0863R, CRES A286, 160 KSI)
Nut (NAS1291C8M, CRES A286)

Flange 1: **Handle Base, Capture Bar Assembly**
Part number: SDG39135851-001
Material: 15-5PH 8.264 x 2.84 x 2.50, AMS 5659, Bar, (H1025 specified in Flag 1 on drawing)

Note: Capture Bar, Capture Bar Assembly
Part number: SDG39135850-001
Material: CRES A286, 1.50 dia x 16.25 LG AMS 5737, Bar

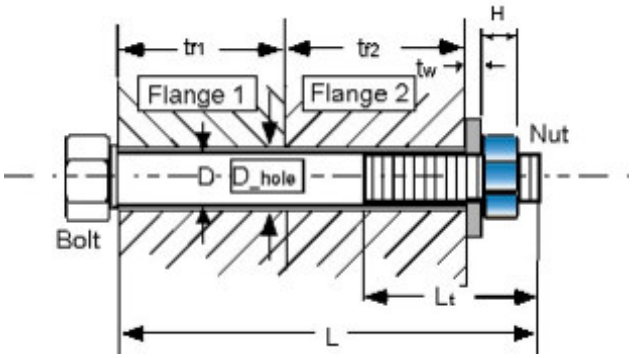

Loads

Applied tensile load	$P := \mathbf{50}\,lbf$
Applied shear load	$V := \mathbf{0}\,lbf$
Applied bending moment	$M := \mathbf{0}\,in \cdot lbf$

Factors of Safety

Ultimate	$SFu := \mathbf{2.0}$	Yield	$SFy := \mathbf{1.25}$
Joint Separation	$SFsep := \mathbf{1.2}$	Fitting factor	$FF := \mathbf{1.00}$

Temperature data

(Ref. Appendix C2)

Assembly	$Temp_initial := \mathbf{70} \cdot deg$
Maximum	$Temp_max := \mathbf{183} \cdot deg$
Minimum	$Temp_min := -\mathbf{11} \cdot deg$

Bolt and Nut Data

Nominal diameter of bolt	$D := \mathbf{.500} \cdot in$	Number of threads/inch	$Nt := \mathbf{20} \cdot \frac{\mathbf{1}}{in}$
Total length of bolt	$L := \mathbf{1.375} \cdot in$	Height of nut	$H := \mathbf{0.350} \cdot in$
Threaded length	$Lt := \mathbf{0.750} \cdot in$	(If bolt is fully threaded, input Lt = L)	

This file uses the calculations shown in \\escfil02\2i11_mathcad\8307_bolts\thread_data.mcd

Tue Feb 15 10:54:02 AM 2005

Washer Data

Thickness of washers $tw := \mathbf{0.063} \cdot in$

Outer Diameter of washer $Dw := \mathbf{0.875} in$

Inner Diameter of washer $Dwi := \mathbf{0.515} \cdot in$

Bolt head dia. across flats $dw := \mathbf{0.786} \cdot in$

used only if there is no washer)

(Since there is no bolt haed , the nut dimension "Fmin" is used Ref. NAS1291 Specification.

Flange data

1/2 Thickness of flange 1 $tf1 := \mathbf{.4205} \cdot in$ (Ref. SDG39135851)

1/2 Thickness of flange 1 $tf2 := \mathbf{.4205} in$ (Ref. SDG39135851)

(Single flange thickness divided into flange 1 and flange 2.)

Diameter of hole $D_hole := \mathbf{0.516} \cdot in$

(used only if there is no washer)

Material Property Data

Bolt

Temperature correction factor for bolt strength ult (Ref. MIL-HDBK-5J, fig. 6.2.1.1.1) $TSu_bolt := \mathbf{.96}$ Yield $TSy_bolt := \mathbf{.96}$

Bolt ultimate tensile allowable stress $Ftu_bolt := \mathbf{140000} \cdot psi$

Bolt ultimate shear allowable stress $Fsu_bolt := \mathbf{0.6} \cdot Ftu_bolt$

Bolt yield Tensile allowable stress $Fty_bolt := \mathbf{95000} \cdot psi$

Temperature correction factor for bolt modulus $TE_bolt := \mathbf{.98}$ (Ref. MIL-HDBK-5J, fig. 6.2.1.1.4(a))

Modulus of elasticity of bolt $E_bolt := \left(\mathbf{29.1} \cdot \mathbf{10}^{\mathbf{6}} \cdot psi\right)$

(Ref. MIL-HDBK-5J, table 6.2.1.0(b))

Thermal coeffecient for bolt (Ref. MIL-HDBK-5J, fig. 6.2.1.0)

$$\beta_bolt_hot := \mathbf{9.15} \cdot \mathbf{10}^{-\mathbf{6}} \cdot \frac{\frac{in}{in}}{deg}$$

$$\beta_bolt_cold := \mathbf{8.8} \cdot \mathbf{10}^{-\mathbf{6}} \cdot \frac{\frac{in}{in}}{deg}$$

Nut

Temperature correction factor for nut strength $TS_nut := \mathbf{.96}$

Ultimate tensile allowable stress $Ftu_nut := \mathbf{125000} \cdot psi$

Ultimate Shear allowable stress: $Fsu_nut := \mathbf{0.6} \cdot Ftu_nut$

Ultimate axial strength of nut $Ptu_nut := \mathbf{21110} \cdot lbf$ (Ref. NAS1291)

Washer

Temperature correction factor washer modulus $TE_washer := \mathbf{.96}$ (Ref MIL-HDBK-5J fig. 6.2.1.1.1)

Modulus of elasticity of washer: $E_washer := \left(\mathbf{29.1} \cdot \mathbf{10}^{\mathbf{6}} \cdot psi\right)$ (Ref MIL-HDBK-5J table 6.2.1.0(b))

Flanges

Stiffness of the joint depends upon number of members in the grip of the fasteners,
Modulus of elasticity of these members, and diameters of the bolt and the washer.

Temperature correction factor for flange 1 $Tf1E := \mathbf{.99}$ (modulus)
Temperature correction factor for flange 2 $Tf2E := \mathbf{.99}$ (modulus)
(Ref. MIL-HDBK-5J Figure 2.6.7.1.4)

Modulus of elasticity for the parts in the joint $E_flange1 := \left(\mathbf{28.5} \cdot \mathbf{10}^{\mathbf{6}} \cdot psi\right)$ $E_flange2 := \left(\mathbf{28.5} \cdot \mathbf{10}^{\mathbf{6}} \cdot psi\right)$
(Ref. MIL-HDBK-5J Table 2.6.7.0(b))

Coefficient of thermal expansion for flanges $\beta_flange1_hot := \mathbf{6.3} \cdot \mathbf{10}^{-\mathbf{6}} \cdot \frac{\frac{in}{in}}{deg}$ $\beta_flange2_hot := \mathbf{6.3} \cdot \mathbf{10}^{-\mathbf{6}} \cdot \frac{\frac{in}{in}}{deg}$
(Ref. MIL-HDBK-5J Figure 2.6.7.0, use H1075 curve)
(Ref. Appendix C11)

$\beta_flange1_cold := \mathbf{6.3} \cdot \mathbf{10}^{-\mathbf{6}} \cdot \frac{\frac{in}{in}}{deg}$ $\beta_flange2_cold := \mathbf{6.3} \cdot \mathbf{10}^{-\mathbf{6}} \cdot \frac{\frac{in}{in}}{deg}$

Torque/Preload data

Maximum torque (66.2% of yield) $Tmax := \mathbf{741} \cdot in \cdot lbf$

Minimum torque (85% of max. torque) $Tmin := \mathbf{630} in \cdot lbf$ Loading plane factor $n := \mathbf{.5}$

Torque coefficient $k := \mathbf{0.15}$ Preload Uncertainty $u := \mathbf{0.25}$

This file uses the calculations shown in \\escfil02\2i11_mathcad\8307_bolts\bolt_stiffness_nut_RevC

Mon Feb 14 12:35:43 2005

Bolt Load data

(The stiffness calculation ϕ needs to be updated to a cylindrical load pattern.)

Bolt/joint stiffness factor	$= \mathbf{0.22}$	Preload due to temperature	Pthr_pos $= \mathbf{768} \cdot lbf$
Max. preload	PLDmax $= \mathbf{13118} \cdot lbf$		Pthr_neg $= -\mathbf{1221.4} \cdot lbf$
Min. preload	PLDmin $= \mathbf{4461.1} \cdot lbf$	Uncertainty factor	$u = \mathbf{0.25}$
Joint separation load	Psep $= \mathbf{60.00} \cdot lbf$	Torque coefficient	$k = \mathbf{0.15}$
Max load on bolt (ultimate)	Pb $= \mathbf{13128.8} \cdot lbf$	Loading plane factor	$n = \mathbf{0.50}$
Max. load on the bolt (yield)	Pby $= \mathbf{13124.7} \cdot lbf$	Thread pullout strength required to develop full strength of bolt	PAs $= \mathbf{25333.6} \cdot lbf$
Bolt ultimate tensile strength	PAt $= \mathbf{20265.6} \cdot lbf$	Nut ultimate tensile strength	Ptu_nut $= \mathbf{20265.6} \cdot lbf$

Summary of Margins for bolt

Length_check = **"Bolt length is sufficient"**

Joint separation	$MS_1 = \mathbf{82.34}$	Direct Thread shear Ultimate	$MS_6 = \mathbf{252.34}$
Direct Tension Ultimate	$MS_2 = \mathbf{201.66}$	Total Thread shear Ultimate	$MS_7 = \mathbf{0.93}$
Direct Tension Yield	$MS_3 = \mathbf{228.21}$	Shear Ultimate	$MS_8 = \mathbf{10.00}$
Total Tension Ultimate	$MS_4 = \mathbf{0.54}$	Bending Ultimate	$MS_9 = \mathbf{10.00}$
Total Tension Yield	$MS_5 = \mathbf{0.09}$	Combined shear, tension and bending ultimate	$MS_{10} = \mathbf{0.54}$

Determination of the smallest margin of safety for the bolt, and the failure mode

MSbolt := min(MS)

MSbolt = **0.09** Failure_Mode = **"Total Tension Yield"**

Mon Feb 14 12:37:28 2005

4.12.5 PAS Guide Pin Bolted Interface

Section 4.12.5 PAS Guide Pin Bolted Interface

The PAS Guide Pin Bolt Analysis is performed in the following report sections.

4.12.5.1	PAS Guide Pin to PAS Base
4.12.5.1	PAS Guide Pin to PAS Base Fail Safe

4.12.5.1 PAS Guide Pin to PAS Base

4.12.5.1 Aft Guide Pin to PAS Platform Bolt Analysis

Geometry and Dimensions for the Aft Guide Pin Assembly

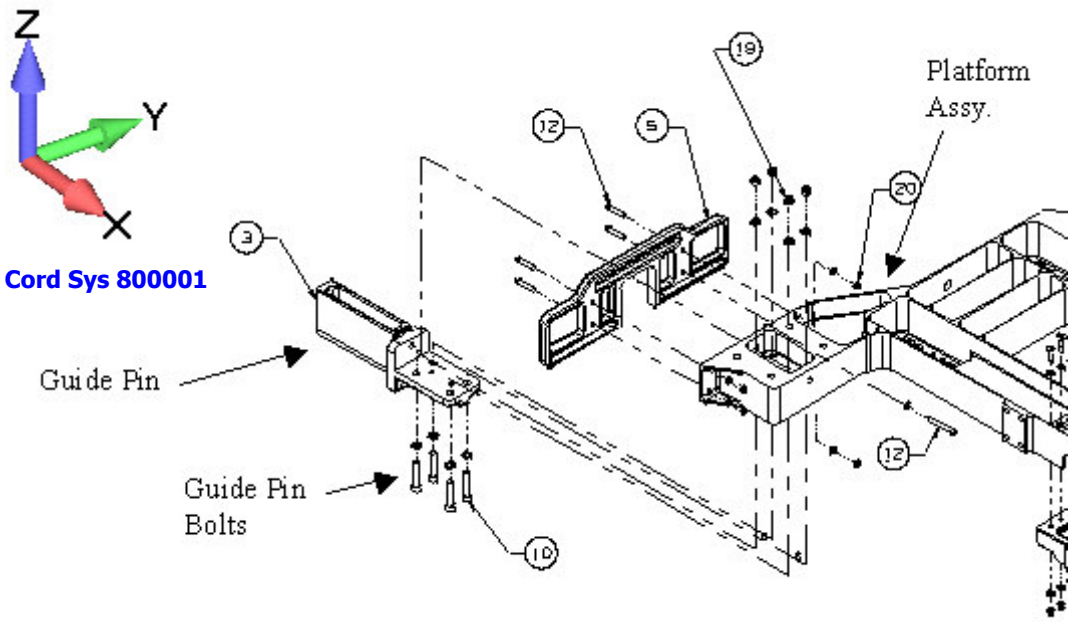

Exploded view of Aft Guide Pin to PAS Platform Installation

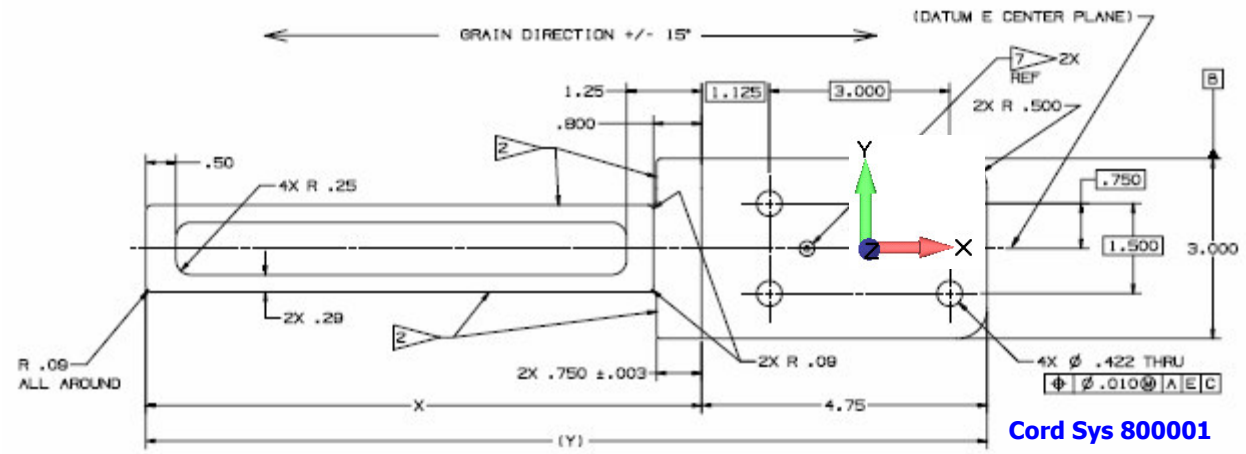

Guide Pin Dimensions, SDG39135818 Guide Pins, PAS Base Assy

Note

The Nodes are in the Definition Coordinate System C800001.
The SPC Forces are in the Output Coordinate System C800001.
The Analysis coordinate system is aligned with CS C800001, but with it's origin at the CG of the bolt pattern.

Coordinates of the Applied SPC Forces in Coordinate System 800001

Node ID	Def CS	Out CS	X1	X2	X3
801564	800001	800001	-24.	-13.857	0.3864

Coordinates of the Center of Gravity for the Bolt Group in Coordinate System 800001

Point ID	Def CS	Out CS	X1	X2	X3
7	800001	800001	-20.075	-13.857	0.54229

Note: The X1, X2, X3 column labels are taken from NASTRAN SPC Force printed output nomenclature.

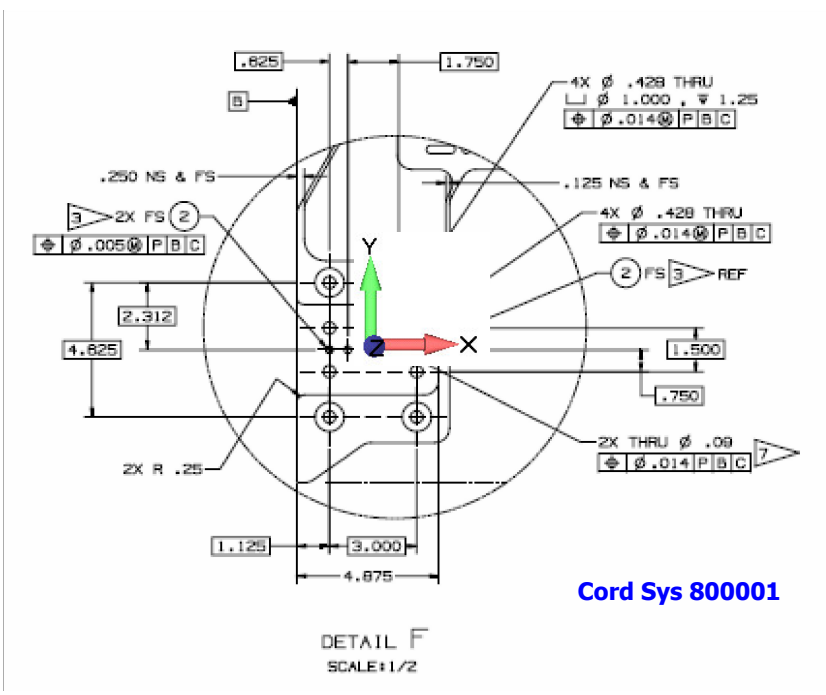

SDG39135817 PAS Platform Assy, PAS Base Assy

Bolt Section Properties

The Guide Pins attach to the PAS Platform with a four bolt pattern.

$ORIGIN := 1$

$$bolt := \begin{array}{c} \begin{array}{cc} \text{Diam} & \text{Number of Threads/in} \end{array} \\ \begin{pmatrix} 0.375 & 24 \\ 0.375 & 24 \\ 0.375 & 24 \\ 0.375 & 24 \end{pmatrix} \end{array}$$

$i := 1 .. rows(bolt)$ *Set "i" as Row Counter for Array "bolt", i.e. # of Bolts*

$D_i := bolt_{i,1} \cdot in$ *Assign Diameter of Bolt to Variable D*

$N_i := bolt_{i,2} \cdot \frac{1}{in}$ *Assign Number of Threads per Inch to Variable N*

$i =$

1.00
2.00
3.00
4.00

Tensile Area of Bolt

$$At_i := \beta \cdot \left(\frac{D_i - 0.9743 \cdot \frac{1}{N_i}}{2} \right)^2 \qquad At = \begin{pmatrix} 0.088 \\ 0.088 \\ 0.088 \\ 0.088 \end{pmatrix} in^{2.000}$$

Shear Area of Bolt

$$As_i := \beta \cdot \left(\frac{D_i - 1.299038 \cdot \frac{1}{N_i}}{2} \right)^2 \qquad As = \begin{pmatrix} 0.081 \\ 0.081 \\ 0.081 \\ 0.081 \end{pmatrix} in^{2.000}$$

Bolt Pattern Geometry (Assuming Origin of Coordinate System is at CG of Pattern)

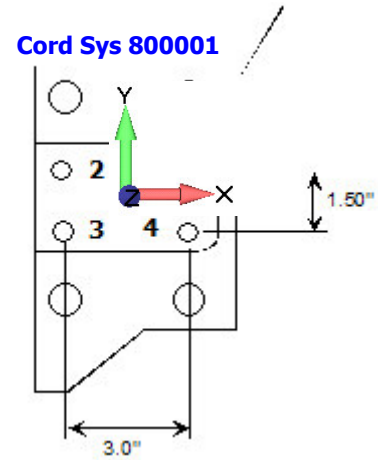

Note For local Coordinate System 800001, the z axis direction is axial and the x and y axis directions are shear.

Bolt No.	X Coordinates	Y Coordinates	Z Coordinates
$\begin{pmatrix}1\\2\\3\\4\end{pmatrix}$	$x := \begin{pmatrix}1.5\\-1.5\\-1.5\\1.5\end{pmatrix}\cdot in$	$y := \begin{pmatrix}0.750\\0.750\\-0.750\\-0.750\end{pmatrix}\cdot in$	$z := \begin{pmatrix}0\\0\\0\\0\end{pmatrix} in$

Location of SPC Forces in Coordinate System 800001

Note: The original parasolid geometry used to create the FEM no longer exists in the FEM file. So, it is being assumed that the CBARs representing the Guide Pins are located at the centroid of the actual Guide Pin part.

$X1_{spc} := -3.92498 \cdot in$

$X2_{spc} := 0.0 \cdot in$

$X3_{spc} := -0.15589 \cdot in$

$$L_{spc} := \begin{pmatrix} X1_{spc} \\ X2_{spc} \\ X3_{spc} \end{pmatrix}$$

$$L_{spc} = \begin{pmatrix} -3.92 \\ 0.00 \\ -0.16 \end{pmatrix} \cdot in$$

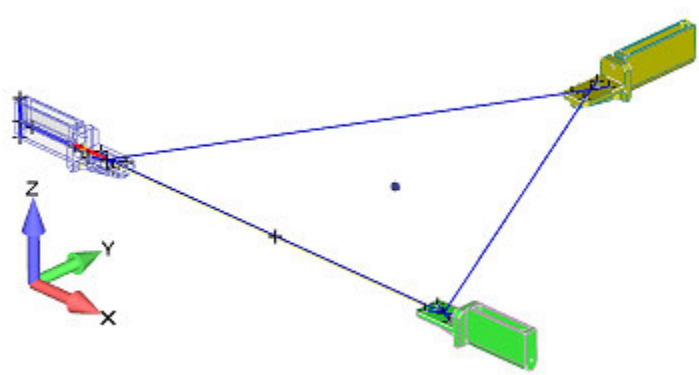

Location of the Center of Gravity of Bolt Pattern in Coordinate System 800001

Analysis assumes origin is located at the CG of the bolt pattern.

$$Xcg := \frac{\sum_i x_i}{rows(x)} \qquad Xcg = \mathbf{0.00} \cdot in$$

$$Ycg := \frac{\sum_i y_i}{rows(y)} \qquad Ycg = \mathbf{0.00} \cdot in$$

$$Zcg := \frac{\sum_i z_i}{rows(z)} \qquad Zcg = \mathbf{0.00} \cdot in$$

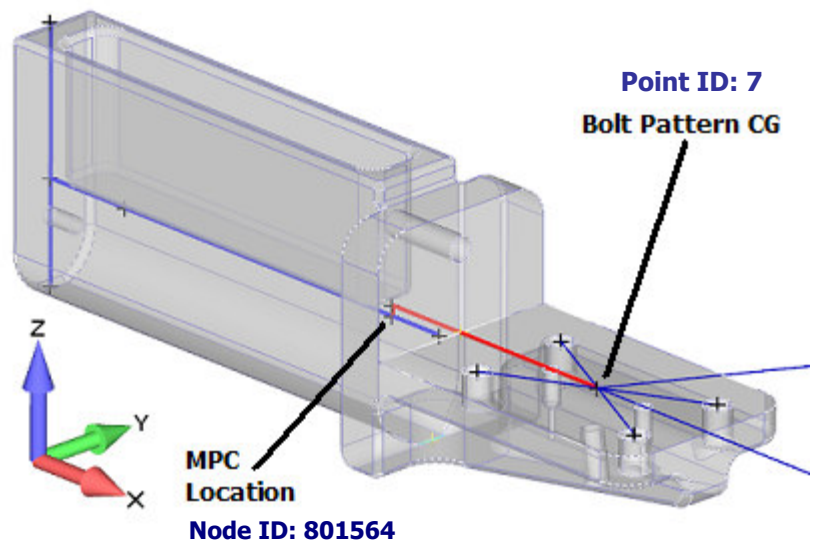

$$CG_{bolt} := \begin{pmatrix} Xcg \\ Ycg \\ Zcg \end{pmatrix} \qquad CG_{bolt} = \begin{pmatrix} \mathbf{0.00} \\ \mathbf{0.00} \\ \mathbf{0.00} \end{pmatrix} \cdot in$$

Note Since the z direction is perpendicular to the plane of the bolt pattern, it is assumed the direct axial loads are shared equally among the bolts. The x and y directions have a zero offset from the CG of the pattern.

Resultant Vector Distance from CG of Pattern to Location of SPC Force

$$r_{load} := L_{spc} - CG_{bolt} \qquad r_{load} = \begin{pmatrix} \mathbf{-3.925} \\ \mathbf{0.000} \\ \mathbf{-0.156} \end{pmatrix} \cdot in$$

RMS Distance from CG of the Bolt Pattern to Each Individual Bolt for Shear Calculations

$$r_i := \sqrt{(x_i - Xcg)^2 + (y_i - Ycg)^2} \qquad r = \begin{pmatrix} \mathbf{1.677} \\ \mathbf{1.677} \\ \mathbf{1.677} \\ \mathbf{1.677} \end{pmatrix} \cdot in$$

Applied Loads

Applied Loads SPC's for the Aft Guide Pins, SDG39135818-003

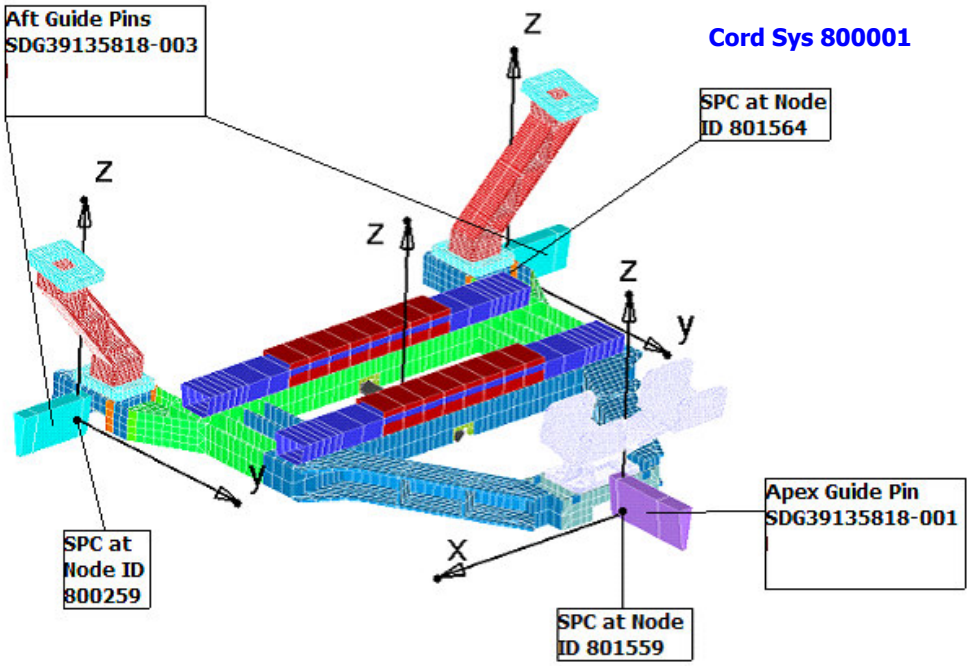

FEM of Guide Pins, PAS Base Assembly, Aft and Vertex Brackets

The picture above shows the finite element model of the Aft and Apex Guide Pins, the PAS Base Assembly, and the Aft and Vertex brackets. The origin of the black arrows show the location of the constraints (SPCs) and their corresponding Node IDs. The black arrow heads show the positive axis directions for those SPCFORCES.

The Picture below shows selected nodes and CBEAM elements that represent the Aft and Vertex Guide Pins.

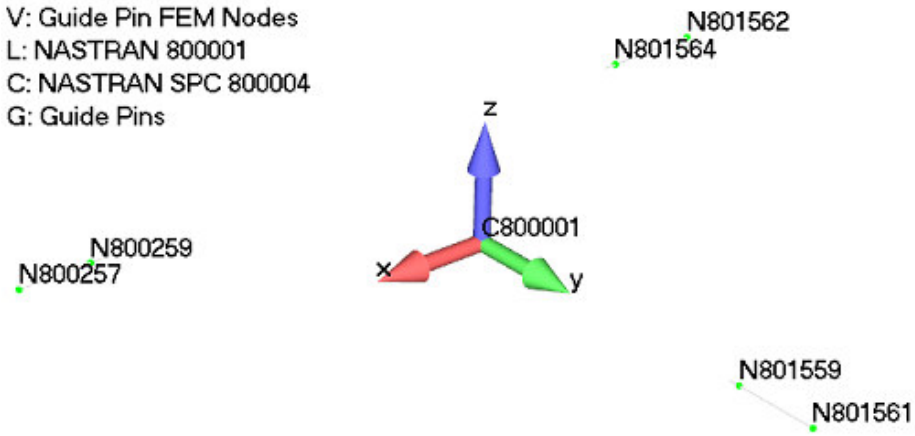

Guide Pin Nodes

Read SPC Force File Into an Array

Note: The file guidepin-sangster.dat contains SPC FORCEs (Node ID, Load Case, Fx (lbf), Fy (lbf), Fz (lbf)) in Coordinate System 800001 for Nodes 800259 (Aft), 801564 (Aft), and 801559 (Apex), for On-Orbit Load Cases 5001-5064, and has the following columnwise structure:

Column	**(1)**	**(2)**	**(3)**	**(4)**	**(5)**
Header Row	**Node ID**	**Load Case**	**T1 lbf**	**T2 lbf**	**T3 lbf**
Data	$data_{j,1}$	$data_{j,2}$	$data_{j,3}$	$data_{j,4}$	$data_{j,5}$

$data := READPRN(\text{"guidepin-sangster.dat"})$ *SPC FORCEs File Being Read Into Array "data"*

$ORIGIN := 1$ *Set Origin of all Arrays to 1*

Note "i" was defined earlier and is a counter for the bolt #.

$j := 1 .. rows(data)$ *Set "j" as Row Counter for Array "data"*

$num_bolts := rows(bolt)$ *Number of Bolts in the Pattern*

$ID_j := data_{j,1}$ *Assign Node IDs to Column 1 of Array*

$LC_j := data_{j,2}$ *Assign Load Case # to Column 2 of Array*

$ID_j := ID_j \cdot 1000 + 1$ *Incremental Counter for Each Loop*

$M_j := 0 \cdot in \cdot lbf$ *Set Applied Bending Moment at Bolts to Zero*

Bolt CG Forces MPC Forces

$Fz_BoltCG_j := data_{j,5} \cdot lbf$ *Direct Axial Load at CG of Bolt Pattern along Z Axis*

$Fx_BoltCG_j := data_{j,3} \cdot lbf$ *Direct Shear Load at CG of Bolt Pattern along X Axis*

$Fy_BoltCG_j := data_{j,4} \cdot lbf$ *Direct Shear Load at CG of Bolt Pattern along Y Axis*

Transform MPC Forces into Axial and Shear Bolt Loads

Moment Distribution at the CG of the Bolt Pattern

$$M_{tot}^{\langle j \rangle} := r_{load} \times \begin{pmatrix} Fx_BoltCG_j \\ Fy_BoltCG_j \\ Fz_BoltCG_j \end{pmatrix}$$

Use the cross-product to determine the additional moments acting on the fasteners.

$$Mx_BoltCG_j := M_{tot_{1,j}}$$

Moment at CG of Bolt Pattern about X Axis

$$My_BoltCG_j := M_{tot_{2,j}}$$

Moment at CG of Bolt Pattern about Y Axis

$$Mz_BoltCG_j := M_{tot_{3,j}}$$

Torsion at CG of Bolt Pattern about Z Axis

Tensile Force on Each Bolt Due to Direct Axial Loading, and Moments at the CG of the Pattern

$$Ftdirect_{i,j} := \frac{Fz_BoltCG_j}{num_bolts}$$

Direct Axial Tensile Load

$$Ftmx_{i,j} := \begin{cases} 0 \cdot lbf & \text{if } (y_i - Ycg) = 0 \cdot in \\ \dfrac{\left[Mx_BoltCG_j \cdot (y_i - Ycg)\right] At_i}{\sum_i \left[(y_i - Ycg)^2 \cdot At_i\right]} & \end{cases}$$

Tensile Due to the Moment about X

$$Ftmy_{i,j} := \begin{cases} 0 \cdot lbf & \text{if } (x_i - Xcg) = 0 \cdot in \\ \dfrac{-My_BoltCG_j \cdot (x_i - Xcg) \cdot At_i}{\sum_i \left[(x_i - Xcg)^2 \cdot At_i\right]} & \end{cases}$$

Tensile Due to the Moment about Y

$$Ft_{i,j} := Ftdirect_{i,j} + Ftmx_{i,j} + Ftmy_{i,j}$$

Total Tensile Load

Shear Force on Each Bolt Due to Direct Shear, and Torsion at the CG of the Bolt Pattern

$$Fs_{i,j} := \frac{Mz_BoltCG_j \cdot r_i \cdot As_i}{\sum_i \left[(r_i)^2 \cdot (As_i)\right]}$$

Secondary Shear Due to Torsion at CG of Bolt Pattern

$$u_i := atan2(x_i - Xcg, y_i - Ycg)$$

$$Sy_{i,j} := \sin\left(\frac{\beta}{2} - u_i\right) \cdot Fs_{i,j} \qquad Sx_{i,j} := -\cos\left(\frac{\beta}{2} - u_i\right) \cdot Fs_{i,j} \qquad u = \begin{pmatrix} 26.6 \\ 153.4 \\ -153.4 \\ -26.6 \end{pmatrix} \cdot deg$$

$$Sx^{\langle 1 \rangle} = \begin{pmatrix} -141.25 \\ -141.25 \\ 141.25 \\ 141.25 \end{pmatrix} \text{lbf} \qquad Sy^{\langle 1 \rangle} = \begin{pmatrix} 282.50 \\ -282.50 \\ -282.50 \\ 282.50 \end{pmatrix} \text{lbf}$$

Direct Shear

$$FsTot_{i,j} := \sqrt{\left(Sx_{i,j} + \frac{Fx_BoltCG_j}{2}\right)^2 + \left(Sy_{i,j} + \frac{Fy_BoltCG_j}{2}\right)^2}$$

$\max(FsTot) = \mathbf{757.84}$ lbf

$\min(FsTot) = \mathbf{3.01}$ lbf

Create Input for Bolt Tempate

Stack Node ID, Load Case, Axial Force, Shear Force, and Moment

The stack commands below are used to stack the element identifications (ID) and load cases (LC) in ascending order per bolt. The element ID number is located in the first column and the LC numbers in the second column.

$ID := stack(ID, ID + \mathbf{1}, ID + \mathbf{2}, ID + \mathbf{3})$

$LC := stack(LC, LC, LC, LC)$

The stack commands below are used to stack applied axial load (P), applied shear load (V), and applied moment (M) in ascending order per bolt. These loads are put into an array with the element/bolt number and load case number from above.

$$P := stack\left[\left(Ft^T\right)^{\langle 1 \rangle}, \left(Ft^T\right)^{\langle 2 \rangle}, \left(Ft^T\right)^{\langle 3 \rangle}, \left(Ft^T\right)^{\langle 4 \rangle}\right]$$

$$V := stack\left[\left(FsTot^T\right)^{\langle 1 \rangle}, \left(FsTot^T\right)^{\langle 2 \rangle}, \left(FsTot^T\right)^{\langle 3 \rangle}, \left(FsTot^T\right)^{\langle 4 \rangle}\right]$$

$M := stack(M, M, M, M)$

Create an Array of Bolt Forces and Moments

The "Output" file outputs an array from left to right starting with the element identification (ID), Load case number (LC), applied axial load on the bolt (P), applied shear on the bolt (V), and applied moment on the bolt (M). The array is then written to a text file.

$$Output := augment\left(ID, LC, \frac{P}{lbf}, \frac{V}{lbf}, \frac{M}{in \cdot lbf}\right)$$

Note Since the ID and LC numbers are dimensionless, the P, V, and M values are divided by their units in order to make the array dimensionless.

Size of the "Output" Array $\quad rows(Output) = \mathbf{768}$

(4 bolts x 64 load cases) x 3 joint = 768 rows

WRITEPRN(**"output_Gdpin_onorbit.txt"**) := Output

CHECK
Bolts (NAS1351N6-28, 0.375-24 x 1.75 L, CRES A286)
Nut (NAS1291C6M, .375-24)
Washer (NAS1149E0663R, .390 ID x .625 OD x .063 THK)

data := Output

s := **1**.. rows(data)

Flange 1: **Guide Pins, PAS Base Assy**
Part number: **SDG39135818**
Material: **7050-T7451, BMS-7-323-C, 12.6 x 3.75 x 3.00**

Flange 2: **PAS Platform**
Part number: **SDG39135817**
Material: **7050-T7451, BMS-7-323-C, Plate 2.001-3.000, A**

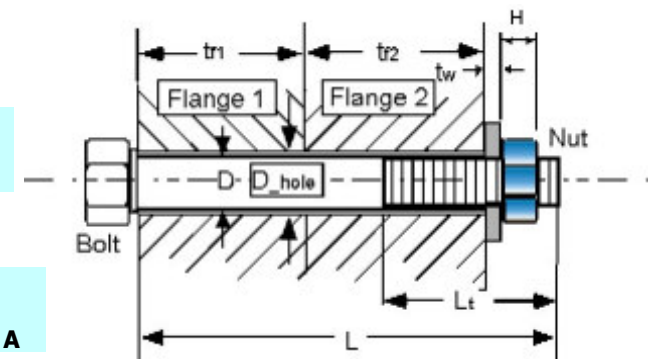

Loads

Applied tensile load	$P_S := data_{S,3} \cdot lbf$	$ID_S := data_{S,1}$
Applied shear load	$V_S := data_{S,4} \cdot lbf$	$LC_S := data_{S,2}$
Applied bending moment	$M_S := data_{S,5} \cdot in \cdot lbf$	

Factors of Safety

Ult	SFu := **2.0**	Yield	SFy := **1.25**
Joint Separation	SFsep := **1.2**	Fitting factor	FF := **1.15**

Temperature data

(Ref. Appendix C2)

Assembly	Temp_initial := **70** ·deg
Maximum	Temp_max := **153** ·deg
Minimum	Temp_min := –**44** ·deg

Bolt and Nut Data

Nominal diameter of bolt $D := \mathbf{.375} \cdot in$

Number of threads/inch $Nt := \mathbf{24} \cdot \frac{\mathbf{1}}{in}$

Total length of bolt $L := \mathbf{1.75} \cdot in$

Height of nut $H := \mathbf{0.267} \cdot in$

Threaded length $Lt := \mathbf{1.25} \cdot in$

(If bolt is fully threaded, input Lt = L)

This file uses the calculations shown in \\escfil02\2i11_mathcad\8307_bolts\thread_data.mcd

Washer Data

Thickness of washers $tw := \mathbf{0.063} \cdot in$

Outer Diameter of washer $Dw := \mathbf{0.625} in$

Inner Diameter of washer $Dwi := \mathbf{0.390} \cdot in$

Bolt head dia. across flats $dw := \mathbf{0.457} \cdot in$ (used only if there is no washer)

Flange data

Thickness of flange 1 $tf1 := \mathbf{.500} \cdot in$ (Ref. SDG39135818)

Thickness of flange 2 $tf2 := \mathbf{0.500} in$ (Ref. SDG39135817)

Diameter of hole $D_hole := \mathbf{0.428} \cdot in$

Material Property Data

Bolt

Temperature correction factor for bolt strength Ult. (Ref. MIL-HDBK-5J, fig. 6.2.1.1.1) $TSu_bolt := \mathbf{.96}$ Yield $TSy_bolt := \mathbf{.96}$

Bolt Ult tensile allowable stress $Ftu_bolt := \mathbf{160000} \cdot psi$

Bolt Ult shear allowable stress $Fsu_bolt := \mathbf{0.6} \cdot Ftu_bolt$

Bolt yield Tensile allowable stress $Fty_bolt := \mathbf{120000} \cdot psi$

Temperature correction factor for bolt modulus (Ref. MIL-HDBK-5J, fig. 6.2.1.1.4(a)) $TE_bolt := \mathbf{.96}$

Modulus of elasticity of bolt $E_bolt := \left(29.1 \cdot 10^{6} \cdot psi\right)$

(Ref. MIL-HDBK-5J, table 6.2.1.0(b))

Thermal coeffecient for bolt $_bolt_hot := 9.1 \cdot 10^{-6} \cdot \frac{\frac{in}{in}}{deg}$

(Ref. MIL-HDBK-5J, fig. 6.2.1.0) $_bolt_cold := 8.9 \cdot 10^{-6} \cdot \frac{\frac{in}{in}}{deg}$

Nut

Temperature correction factor for nut strength $TS_nut := .96$
(Ref. MIL-HDBK-5J, fig. 6.2.1.1.1)

Ult tensile allowable stress $Ftu_nut := 125000 \cdot psi$

Ult Shear allowable stress $Fsu_nut := 0.6 \cdot Ftu_nut$

Ult axial strength of nut $Ptu_nut := 11450 \cdot lbf$

Washer

Temperature correction factor for washer modulus $TE_washer := .96$ (Ref. MIL-HDBK-5J, fig. 6.2.1.1.1)

Modulus of elasticity of washer $E_washer := 29.1 \cdot 10^{6} \cdot psi$ (Ref. MIL-HDBK-5J, table 6.2.1.0(b))

Flanges

Stiffness of the joint depends upon number of members in the grip of the fasteners, Modulus of elasticity of these members, and diameters of the bolt and the washer.

Temperature correction factor for flange 1 $Tf1E := .98$ (modulus) (Ref. Appendix C9)

Temperature correction factor for flange 2 $Tf2E := .98$ (modulus)

Modulus of elasticity for the parts in the joint $E_flange1 := \left(10.3 \cdot 10^{6} \cdot psi\right)$ $E_flange2 := \left(10.3 \cdot 10^{6} \cdot psi\right)$

Coefficient of thermal expansion for flanges

(Ref. Appendix C9)

$_flange1_hot := 12.8 \cdot 10^{-6} \cdot \frac{\frac{in}{in}}{deg}$ $_flange2_hot := 12.8 \cdot 10^{-6} \cdot \frac{\frac{in}{in}}{deg}$

$_flange1_cold := 12.1 \cdot 10^{-6} \cdot \frac{\frac{in}{in}}{deg}$ $_flange2_cold := 12.1 \cdot 10^{-6} \cdot \frac{\frac{in}{in}}{deg}$

Torque/Preload data

(Ref. SDG39135815)

Maximum torque	$Tmax := 377 \cdot in \cdot lbf$	Loading plane factor	$n := .5$
Minimum torque	$Tmin := 320 in \cdot lbf$	Preload Uncertainty	$= := 0.25$
Torque coefficient	$k := 0.15$		

This file uses the calculations shown in \\escfil02\2i11_mathcad\8307_bolts\multi_bolt_stiffness_nut_RevC

Bolt Load data

Bolt/joint stiffness factor	$y = 0.386$	Temperature Preload	$Pthr_pos = 475.1 \cdot lbf$
Max preload	$PLDmax = 8853 \cdot lbf$		$Pthr_neg = -564.3 \cdot lbf$
Min preload	$PLDmin = 3283 \cdot lbf$	Uncertainty factor	$= = 0.25$
Joint separation load	$max(Psep) = 3450 \cdot lbf$	Torque coefficient	$k = 0.15$
Max bolt load (Ult)	$max(Pb) = 10131 \cdot lbf$	Loading plane factor	$n = 0.50$
Max bolt load (yield)	$max(Pby) = 9651 \cdot lbf$	Thread pullout strength required to develop full strength of bolt	$PAs = 15838 \cdot lbf$
Bolt tensile Ult strength	$PAt = 10992 \cdot lbf$	Nut tensile Ult strength	$Ptu_nut = 10992 \cdot lbf$

Summary of Margins for Bolt

$Length_check =$ **"Bolt length is sufficient"**

Joint Separation	$MS_min_{1,1} = 0.03$	Direct Thread Shear Ult	$MS_min_{6,1} = 1.40$
Direct Tension Ult	$MS_min_{2,1} = 0.66$	Total Thread Shear Ult	$MS_min_{7,1} = 0.56$
Direct Tension Yield	$MS_min_{3,1} = 1.40$	Shear Ult	$MS_min_{8,1} = 3.28$
Total Tension Ult	$MS_min_{4,1} = 0.09$	Bending Ult	$MS_min_{9,1} = 10.00$
Total Tension Yield	$MS_min_{5,1} = 0.03$	Combined Shear, Tension, and Bending Ult	$MS_min_{10,1} = 0.08$

Smallest Margin of Safety for the Bolt, and the Failure Mode

MSbolt := min(MS)

MSbolt = **0.03** Minimum Margin of Safety Failure_Mode = **"Total Tension Yield"**

MS_min_ID = **801559002** Element Identification (801559) and Bolt Number (2) for Minimum Margin

MS_min_LC = **5032** Load Case Number for Minimum Margin

MS_min_P = **2874.9** Applied Tensile Load for Minimum Margin

MS_min_V = **273.8** Applied Shear Load for Minimum Margin

MS_min_M = **0** Applied Bending Moment for Minimum Margin

Intentionally Left Blank

Fail-Safe Analysis for Aft Guide Pin to PAS Platform Removing Bolt 2

Geometry and Dimensions for the Aft Guide Pin Assembly

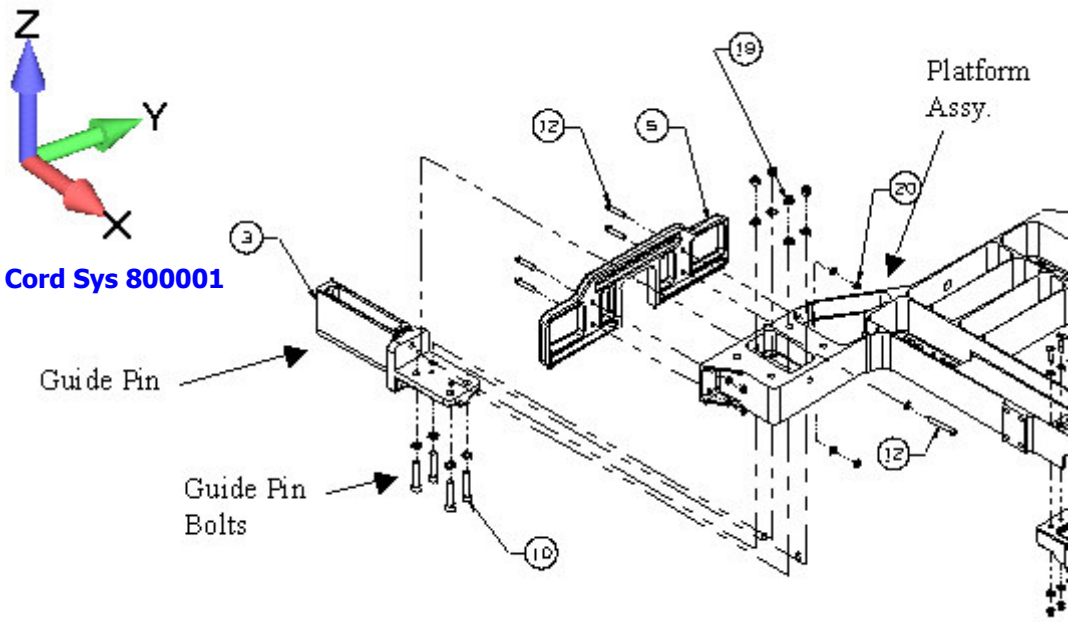

Exploded view of Aft Guide Pin to PAS Platform Installation

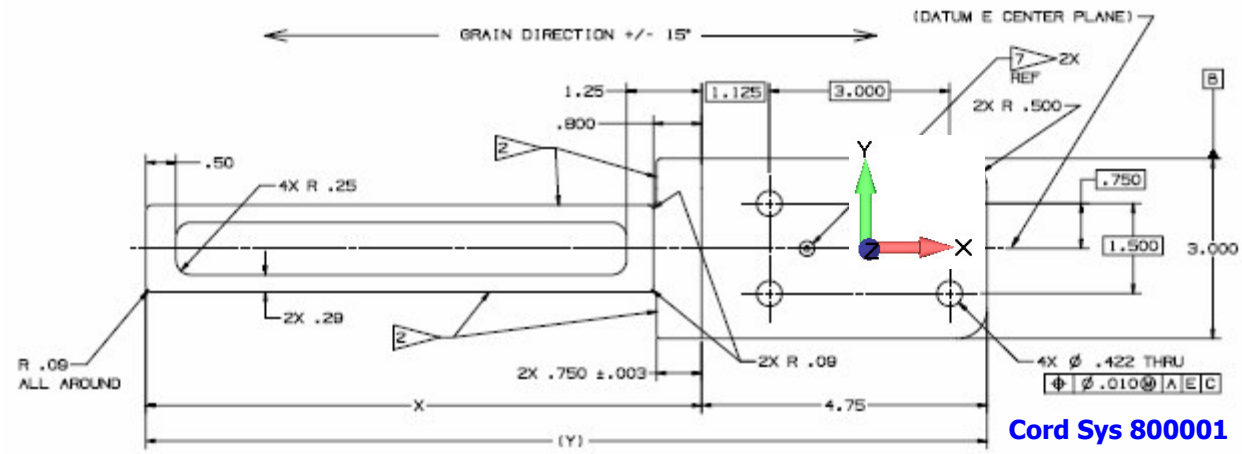

Guide Pin Dimensions, SDG39135818 Guide Pins, PAS Base Assy

Note

The Nodes are in the Definition Coordinate System C800001.
The SPC Forces are in the Output Coordinate System C800001.
The Analysis coordinate system is aligned with CS C800001, but with it's origin at the CG of the bolt pattern.

Coordinates of the Applied SPC Forces in Coordinate System 800001

Node ID	Def CS	Out CS	X1	X2	X3
801564	800001	800001	-24.	-13.857	0.3864

Coordinates of the Center of Gravity for the Bolt Group in Coordinate System 800001

Point ID	Def CS	Out CS	X1	X2	X3
7	800001	800001	-20.075	-13.857	0.54229

Note: The X1, X2, X3 column labels are taken from NASTRAN SPC Force printed output nomenclature.

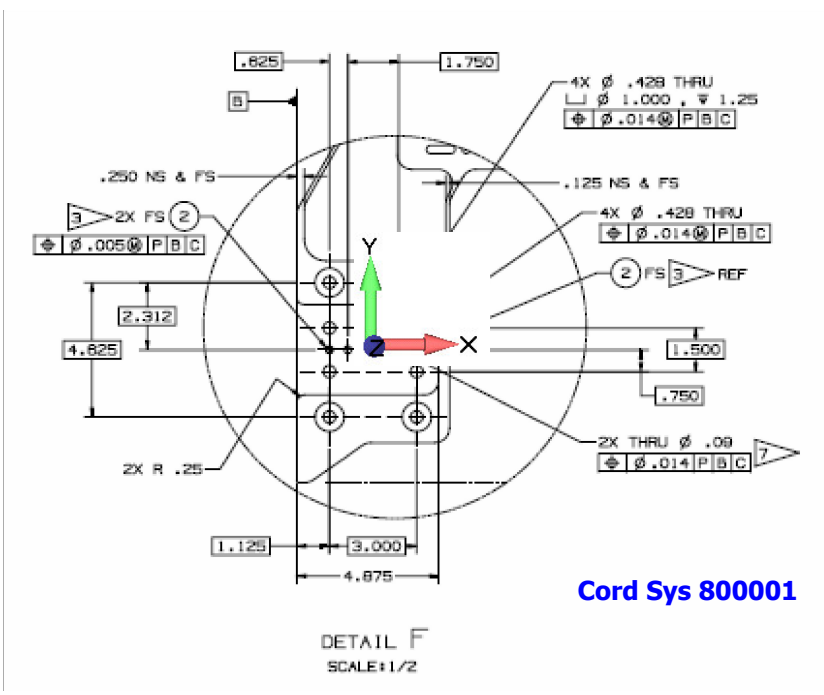

SDG39135817 PAS Platform Assy, PAS Base Assy

Bolt Section Properties

Note **The Guide Pins attach to the PAS Platform with a four bolt pattern. Since bolt number 2 has the lowest margin of safety it is assumed that this bolt will be the first bolt to fail. There are now 3 (NAS1351N6-28, 0.375-24 x 1.75 L, CRES A286) bolts, holding the Guide Pin to the PAS Platform. A new bolt pattern CG and load distribution must be calculated using the remaining 3 bolts.**

ORIGIN := **1**

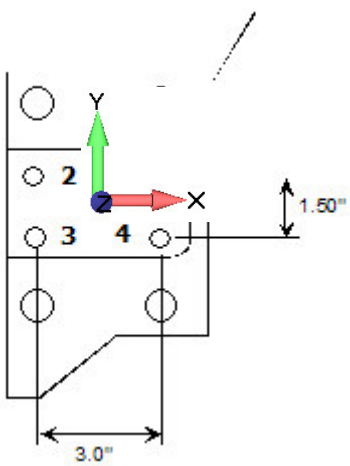

Note For local Coordinate System 800001, the z axis direction is axial and the x and y axis directions are shear.

Diam Number of Threads/in

$$bolt2 := \begin{pmatrix} \mathbf{0.375} & \mathbf{24} \\ \mathbf{0.375} & \mathbf{24} \\ \mathbf{0.375} & \mathbf{24} \end{pmatrix}$$

$s := \mathbf{1} .. \text{rows}(bolt2)$ *Set "s" as Row Counter for Array "bolt2", i.e. # of Bolts*

$D2_s := bolt2_{s,\mathbf{1}} \cdot in$ *Assign Diameter of Bolt to Variable D2*

$N2_s := bolt2_{s,\mathbf{2}} \cdot \frac{\mathbf{1}}{in}$ *Assign Number of Threads per Inch to Variable N2*

s =

1.00
2.00
3.00

Tensile Area of Bolt

$$At2_s := \beta \cdot \left(\frac{D2_s - \mathbf{0.9743} \cdot \frac{\mathbf{1}}{N2_s}}{\mathbf{2}} \right)^{\mathbf{2}}$$

$$At2 = \begin{pmatrix} \mathbf{0.088} \\ \mathbf{0.088} \\ \mathbf{0.088} \end{pmatrix} in^{\mathbf{2.000}}$$

Shear Area of Bolt

$$As2_s := \beta \cdot \left(\frac{D2_s - 1.299038 \cdot \frac{1}{N2_s}}{2} \right)^2 \qquad As2 = \begin{pmatrix} 0.081 \\ 0.081 \\ 0.081 \end{pmatrix} in^{2.000}$$

Bolt Pattern Geometry (Assuming Origin of Coordinate System is at CG of Original Pattern)

Bolt No.	X Coordinates	Y Coordinates	Z Coordinates
$\begin{pmatrix} 1 \\ 3 \\ 4 \end{pmatrix}$	$x2 := \begin{pmatrix} 1.5 \\ -1.5 \\ 1.5 \end{pmatrix} \cdot in$	$y2 := \begin{pmatrix} 0.750 \\ -0.750 \\ -0.750 \end{pmatrix} \cdot in$	$z2 := \begin{pmatrix} 0 \\ 0 \\ 0 \end{pmatrix} in$

Note **Bolt 2 is removed from the bolt pattern.**

Location of SPC Forces in Coordinate System 800001

Note: The original parasolid geometry used to create the FEM no longer exists in the FEM file. So, it is being assumed that the CBEAMs representing the Guide Pins are located at the centroid of the actual Guide Pin part.

Section Properties from FEMAP

Orientation of Section Properties:

Origin:	X=	0.	Y=	0.	Z=	0.
Y Axis:	X=	0.	Y=	1.	Z=	0.
Z Axis:	X=	0.	Y=	0.	Z=	-1.

Section Properties:

Area A= 3.51334

Centroid (from Origin): Cy= +-0.725 Cz= -1.53161

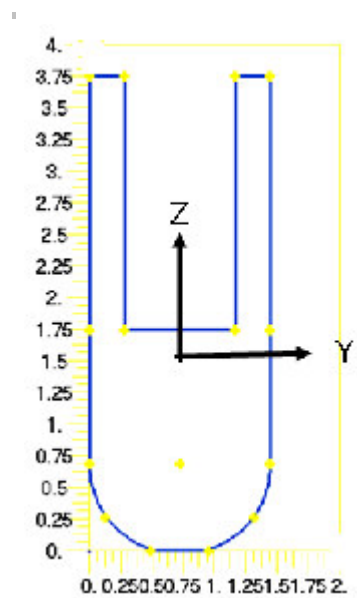

Location of Centroid of Guide Pin

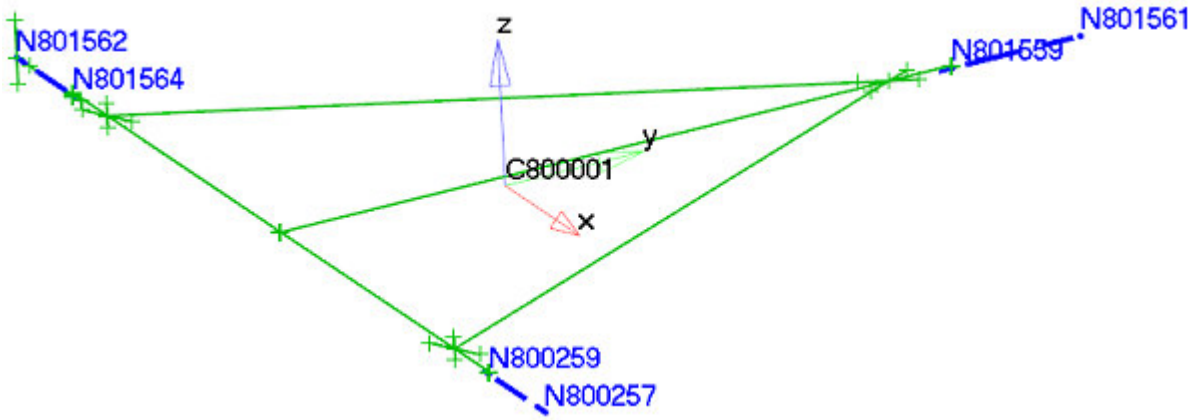

Location and ID of FEM Nodes

$X1_{spc} := -\mathbf{3.92498} \cdot in$

$X2_{spc} := \mathbf{0.0} \cdot in$

$X3_{spc} := -\mathbf{0.15589} \cdot in$

$$L_{spc} := \begin{pmatrix} X1_{spc} \\ X2_{spc} \\ X3_{spc} \end{pmatrix}$$

$$L_{spc} = \begin{pmatrix} -\mathbf{3.92} \\ \mathbf{0.00} \\ -\mathbf{0.16} \end{pmatrix} \cdot in$$

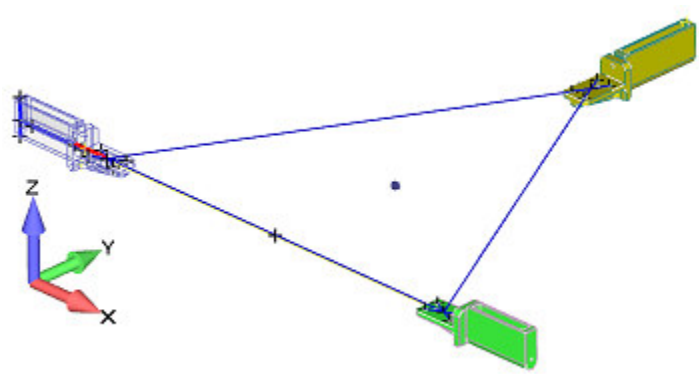

Location of the Center of Gravity of Bolt Pattern in Coordinate System 800001

Analysis assumes origin is located at the CG of the original bolt pattern.

$$X2cg := \frac{\sum_s x2_s}{rows(x2)} \qquad X2cg = \mathbf{0.50} \cdot in$$

$$Y2cg := \frac{\sum_s y2_s}{rows(y2)} \qquad Y2cg = -\mathbf{0.25} \cdot in$$

$$Z2cg := \frac{\sum_s z2_s}{rows(z2)} \qquad Z2cg = \mathbf{0.00} \cdot in$$

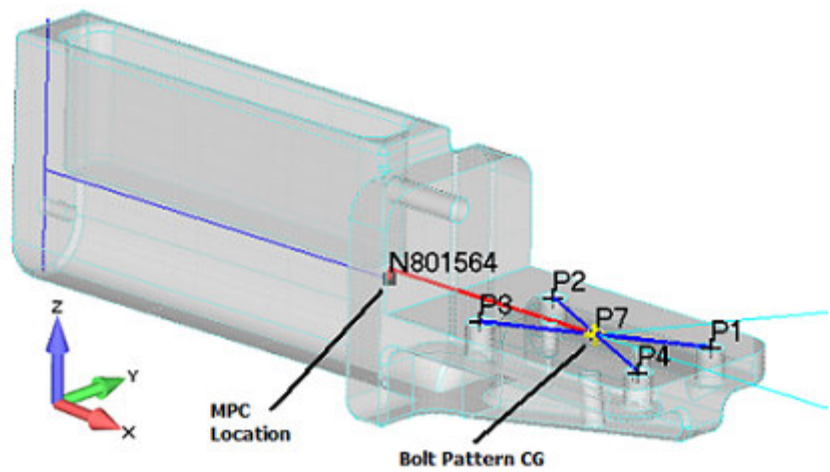

$$CG2_{bolt} := \begin{pmatrix} X2cg \\ Y2cg \\ Z2cg \end{pmatrix} \qquad CG2_{bolt} = \begin{pmatrix} \mathbf{0.50} \\ -\mathbf{0.25} \\ \mathbf{0.00} \end{pmatrix} \cdot in$$

Note Since the z direction is perpendicular to the plane of the bolt pattern, it is assumed the direct axial loads are shared equally among the bolts.
However, because of the assumed failure of Bolt 2, the CG of the new 3-Bolt pattern is offset from the original 4-Bolt pattern.

Resultant Vector Distance from CG of Pattern to Location of SPC Force

$$r2_{load} := L_{spc} - CG2_{bolt} \qquad r2_{load} = \begin{pmatrix} -\mathbf{4.425} \\ \mathbf{0.250} \\ -\mathbf{0.156} \end{pmatrix} \cdot in$$

RMS Distance from CG of the Bolt Pattern to Each Individual Bolt for Shear Calculations

$$r2_s := \sqrt{(x2_s - X2cg)^2 + (y2_s - Y2cg)^2} \qquad r2 = \begin{pmatrix} \mathbf{1.414} \\ \mathbf{2.062} \\ \mathbf{1.118} \end{pmatrix} \cdot in$$

Applied Loads

Forces from SPC's for the Aft Guide Pins, SDG39135818-003

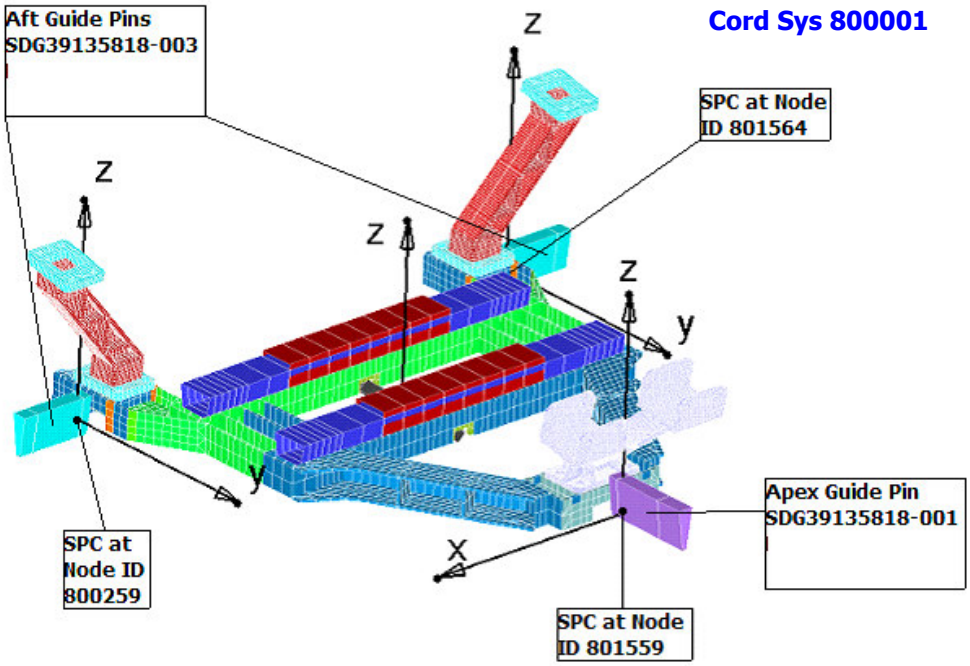

FEM of Guide Pins, PAS Base Assembly, Aft and Vertex Brackets

The picture above shows the finite element model of the Aft and Apex Guide Pins, the PAS Base Assembly, and the Aft and Vertex brackets. The origin of the black arrows show the location of the constraints (SPCs) and their corresponding Node IDs. The black arrow heads show the positive axis directions for those SPCFORCES.

The Picture below shows selected nodes and CBEAM elements that represent the Aft and Vertex Guide Pins.

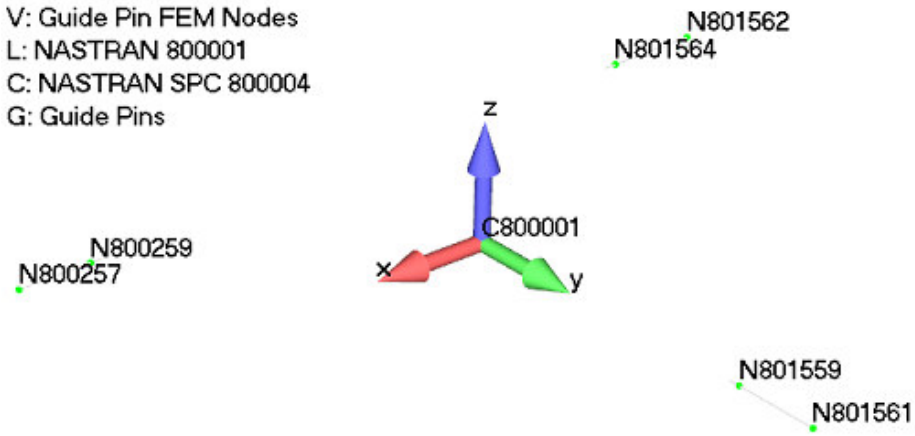

Guide Pin Nodes

Read SPC Force File Into an Array

Note: The file guidepin-sangster.dat contains SPC FORCEs (Node ID, Load Case, Fx (lbf), Fy (lbf), Fz (lbf)) in Coordinate System 800001 for Nodes 800259 (Aft), 801564 (Aft), and 801559 (Apex), for On-Orbit Load Cases 5001-5064, and has the following columnwise structure:

Column	**(1)**	**(2)**	**(3)**	**(4)**	**(5)**
Header Row	**Node ID**	**Load Case**	**T1 lbf**	**T2 lbf**	**T3 lbf**
Data	$data_{q,1}$	$data_{q,2}$	$data_{q,3}$	$data_{q,4}$	$data_{q,5}$

$data2 := READPRN(\text{"guidepin-sangster.dat"})$ *SPC FORCEs File Being Read Into Array "data2"*

$ORIGIN := 1$ *Set Origin of all Arrays to 1*

Note "s" was defined earlier and is a counter for the bolt #.

$q := 1 .. rows(data2)$ *Set "q" as Row Counter for Array "data2"*

$num_bolts2 := rows(bolt2)$ *Number of Bolts in the Pattern*

$ID2_q := data2_{q,1}$ *Assign Node IDs to Column 1 of Array*

$LC2_q := data2_{q,2}$ *Assign Load Case # to Column 2 of Array*

$ID2_q := ID2_q \cdot 1000 + 1$ *Incremental Counter for Each Loop*

$M2_q := 0 \cdot in \cdot lbf$ *Set Applied Bending Moment at Bolts to Zero*

Bolt CG Forces MPC Forces

$Fz2_BoltCG_q := data2_{q,5} \cdot lbf$ *Direct Axial Load at CG of Bolt Pattern along Z Axis*

$Fx2_BoltCG_q := data2_{q,3} \cdot lbf$ *Direct Shear Load at CG of Bolt Pattern along X Axis*

$Fy2_BoltCG_q := data2_{q,4} \cdot lbf$ *Direct Shear Load at CG of Bolt Pattern along Y Axis*

Transform MPC Forces into Axial and Shear Bolt Loads

Moment Distribution at the CG of the Bolt Pattern

$$M2_{tot}^{\langle q \rangle} := r2_{load} \times \begin{pmatrix} Fx2_BoltCG_q \\ Fy2_BoltCG_q \\ Fz2_BoltCG_q \end{pmatrix}$$

Use the cross-product to determine the additional moments acting on the fasteners.

$$Mx2_BoltCG_q := M2_{tot_{1,q}}$$

Moment at CG of Bolt Pattern about X Axis

$$My2_BoltCG_q := M2_{tot_{2,q}}$$

Moment at CG of Bolt Pattern about Y Axis

$$Mz2_BoltCG_q := M2_{tot_{3,q}}$$

Torsion at CG of Bolt Pattern about Z Axis

Tensile Force on Each Bolt Due to Direct Axial Loading, and Moments at the CG of the Pattern

$$Ftdirect2_{s,q} := \frac{Fz2_BoltCG_q}{num_bolts2}$$

Direct Axial Tensile Load

$$Ftmx2_{s,q} := \begin{cases} 0 \cdot lbf & \text{if } (y2_s - Y2cg) = 0 \cdot in \\ \dfrac{\left[Mx2_BoltCG_q \cdot (y2_s - Y2cg)\right] At2_s}{\sum_s \left[(y2_s - Y2cg)^2 \cdot At2_s\right]} \end{cases}$$

Tensile Due to the Moment about X

$$Ftmy2_{s,q} := \begin{cases} 0 \cdot lbf & \text{if } (x2_s - X2cg) = 0 \cdot in \\ \dfrac{-My2_BoltCG_q \cdot (x2_s - X2cg) \cdot At2_s}{\sum_s \left[(x2_s - X2cg)^2 \cdot At2_s\right]} \end{cases}$$

Tensile Due to the Moment about Y

$$Ft2_{s,q} := Ftdirect2_{s,q} + Ftmx2_{s,q} + Ftmy2_{s,q}$$

Total Tensile Load

Shear Force on Each Bolt Due to Direct Shear, and Torsion at the CG of the Bolt Pattern

$$Fs2_{s,q} := \frac{Mz2_BoltCG_q \cdot r2_s \cdot As2_s}{\sum_s \left[(r2_s)^2 \cdot (As2_s)\right]}$$

Secondary Shear Due to Torsion at CG of Bolt Pattern

$$u2_s := atan2(x2_s - X2cg, y2_s - Y2cg)$$

$$Sy2_{s,q} := \sin\left(\frac{\beta}{2} - u2_s\right) \cdot Fs2_{s,q}$$

$$Sx2_{s,q} := -\cos\left(\frac{\beta}{2} - u2_s\right) \cdot Fs2_{s,q}$$

$$u2 = \begin{pmatrix} 45 \\ -166 \\ -26.6 \end{pmatrix} \cdot deg$$

$$Sx2^{\langle 1 \rangle} = \begin{pmatrix} -318.49 \\ 159.24 \\ 159.24 \end{pmatrix} lbf \qquad Sy2^{\langle 1 \rangle} = \begin{pmatrix} 318.49 \\ -636.97 \\ 318.49 \end{pmatrix} lbf$$

Direct Shear

$$FsTot2_{s,q} := \sqrt{\left(Sx2_{s,q} + \frac{Fx2_BoltCG_q}{2}\right)^2 + \left(Sy2_{s,q} + \frac{Fy2_BoltCG_q}{2}\right)^2}$$

$\max(FsTot2) = \mathbf{1223.80}\ lbf$

$\min(FsTot2) = \mathbf{3.53}\ lbf$

Create Input for Bolt Tempate

Stack Node ID, Load Case, Axial Force, Shear Force, and Moment

Note bolt number 2 is not included.

The stack commands below are used to stack the element identifications (ID2) and load cases (LC2) in ascending order per bolt. The element ID number is located in the first column and the LC numbers in the second column.

$ID2 := stack(ID2, ID2 + \mathbf{2}, ID2 + \mathbf{3})$ *Stack Must be Changed to Reflect Bolt 2 Being Removed*

$LC2 := stack(LC2, LC2, LC2)$

The stack commands below are used to stack applied axial load (P2), applied shear load (V2), and applied moment (M2) in ascending order per bolt. These loads are put into an array with the element/bolt number and load case number from above.

$$P2 := stack\left[\left(Ft2^T\right)^{\langle 1 \rangle}, \left(Ft2^T\right)^{\langle 2 \rangle}, \left(Ft2^T\right)^{\langle 3 \rangle}\right]$$

$$V2 := stack\left[\left(FsTot2^T\right)^{\langle 1 \rangle}, \left(FsTot2^T\right)^{\langle 2 \rangle}, \left(FsTot2^T\right)^{\langle 3 \rangle}\right]$$

$M2 := stack(M2, M2, M2)$

Create an Array of Bolt Forces and Moments

The "Output2" file below outputs an array from left to right starting with the element identification (ID2), Load case number (LC2), applied axial load on the bolt (P2), applied shear on the bolt (V2), and applied moment on the bolt (M2). The array is written to a text file.

$$Output2 := augment\left(ID2, LC2, \frac{P2}{lbf}, \frac{V2}{lbf}, \frac{M2}{in \cdot lbf}\right)$$

Note Since the ID2 and LC2 numbers are dimensionless, the P2, V2, and M2 values are divided by their units in order to make the array dimensionless.

Size of the "Output2" Array $\quad rows(Output2) = \mathbf{576}$

(3 bolts x 64 load cases) x 3 joint = 576 rows

WRITEPRN(**"output_Gdpin_onorbit_FS.txt"**) := Output2

Bolt Fail-Safe Results

CHECK
Bolts (NAS1351N6-28, 0.375-24 x 1.75 L, CRES A286)
Nut (NAS1291C6M, .375-24)
Washer (NAS1149E0663R, .390 ID x .625 OD x .063 THK)

data_fs := Output2

s := **1**.. rows(data_fs)

Flange 1: **Guide Pins, PAS Base Assy**
Part number: **SDG39135818**
Material: **7050-T7451, BMS-7-323-C, 12.6 x 3.75 x 3.00**

Flange 2: **PAS Platform**
Part number: **SDG39135817**
Material: **7050-T7451, BMS-7-323-C, Plate 2.001-3.000, A**

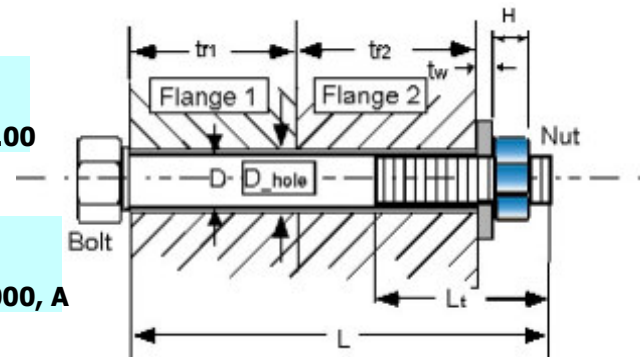

Fail-Safe Loads, On-Orbit Loads

Applied tensile load	$P_FS_S := data_fs_{S,3} \cdot lbf$	$ID_FS_S := data_fs_{S,1}$
Applied shear load	$V_FS_S := data_fs_{S,4} \cdot lbf$	$LC_FS_S := data_fs_{S,2}$
Applied bending moment	$M_FS_S := data_fs_{S,5} \cdot in \cdot lbf$	

Fail-safe Factors of Safety

Ultimate	SFu_FS := **1.0**	Yield	SFy := **1.00**
Joint Separation	SFsep_FS := **1.0**	Fitting factor	FF := **1.15**

Temperature data

(Ref. Appendix C2)

Assembly	Temp_initial := **70** · deg
Maximum	Temp_max := **153** · deg
Minimum	Temp_min := **−44** · deg

Bolt and Nut Data

Nominal diameter of bolt $D := \mathbf{.375} \cdot in$

Number of threads/inch $Nt := \mathbf{24} \cdot \frac{\mathbf{1}}{in}$

Total length of bolt $L := \mathbf{1.75} \cdot in$

Height of nut $H := \mathbf{0.267} \cdot in$

Threaded length $Lt := \mathbf{1.25} \cdot in$

(If bolt is fully threaded, input Lt = L)

This file uses the calculations shown in \\escfil02\2i11_mathcad\8307_bolts\thread_data.mcd

Washer Data

Thickness of washers $tw := \mathbf{0.063} \cdot in$

Outer Diameter of washer $Dw := \mathbf{0.625} in$

Inner Diameter of washer $Dwi := \mathbf{0.390} \cdot in$

Bolt head dia. across flats $dw := \mathbf{0.457} \cdot in$ (used only if there is no washer)

Flange data

Thickness of flange 1 $tf1 := \mathbf{.500} \cdot in$ (Ref. SDG39135818)

Thickness of flange 2 $tf2 := \mathbf{0.500} in$ (Ref. SDG39135817)

Diameter of hole $D_hole := \mathbf{0.428} \cdot in$

Material Property Data

Bolt

Temperature correction factor for bolt strength Ult. (Ref. MIL-HDBK-5J, fig. 6.2.1.1.1) $TSu_bolt := \mathbf{.96}$ Yield $TSy_bolt := \mathbf{.96}$

Bolt Ult tensile allowable stress $Ftu_bolt := \mathbf{160000} \cdot psi$

Bolt Ult shear allowable stress $Fsu_bolt := \mathbf{0.6} \cdot Ftu_bolt$

Bolt yield Tensile allowable stress $Fty_bolt := \mathbf{120000} \cdot psi$

Temperature correction factor for bolt modulus (Ref. MIL-HDBK-5J, fig. 6.2.1.1.4(a)) $TE_bolt := \mathbf{.96}$

Modulus of elasticity of bolt $E_bolt := \left(29.1 \cdot 10^{6} \cdot psi\right)$

(Ref. MIL-HDBK-5J, table 6.2.1.0(b))

Thermal coeffecient for bolt $_bolt_hot := 9.1 \cdot 10^{-6} \cdot \frac{\frac{in}{in}}{deg}$

(Ref. MIL-HDBK-5J, fig. 6.2.1.0) $_bolt_cold := 8.9 \cdot 10^{-6} \cdot \frac{\frac{in}{in}}{deg}$

Nut

Temperature correction factor for nut strength $TS_nut := .96$
(Ref. MIL-HDBK-5J, fig. 6.2.1.1.1)

Ult tensile allowable stress $Ftu_nut := 125000 \cdot psi$

Ult Shear allowable stress $Fsu_nut := 0.6 \cdot Ftu_nut$

Ult axial strength of nut $Ptu_nut := 11450 \cdot lbf$

Washer

Temperature correction factor for washer modulus $TE_washer := .96$ (Ref. MIL-HDBK-5J, fig. 6.2.1.1.1)

Modulus of elasticity of washer $E_washer := 29.1 \cdot 10^{6} \cdot psi$ (Ref. MIL-HDBK-5J, table 6.2.1.0(b))

Flanges

Stiffness of the joint depends upon number of members in the grip of the fasteners, Modulus of elasticity of these members, and diameters of the bolt and the washer.

Temperature correction factor for flange 1 $Tf1E := .98$ (modulus) (Ref. Appendix C9)

Temperature correction factor for flange 2 $Tf2E := .98$ (modulus)

Modulus of elasticity for the parts in the joint $E_flange1 := \left(10.3 \cdot 10^{6} \cdot psi\right)$ $E_flange2 := \left(10.3 \cdot 10^{6} \cdot psi\right)$

Coefficient of thermal expansion for flanges

(Ref. Appendix C9)

$_flange1_hot := 12.8 \cdot 10^{-6} \cdot \frac{\frac{in}{in}}{deg}$ $_flange2_hot := 12.8 \cdot 10^{-6} \cdot \frac{\frac{in}{in}}{deg}$

$_flange1_cold := 12.1 \cdot 10^{-6} \cdot \frac{\frac{in}{in}}{deg}$ $_flange2_cold := 12.1 \cdot 10^{-6} \cdot \frac{\frac{in}{in}}{deg}$

Torque/Preload data

(Ref. SDG39135815)

Maximum torque $Tmax := \mathbf{377} \cdot in \cdot lbf$

Minimum torque $Tmin := \mathbf{320} in \cdot lbf$

Torque coefficient $k := \mathbf{0.15}$

Loading plane factor $n := \mathbf{.5}$

Preload Uncertainty $=:= \mathbf{0.25}$

This file uses the calculations shown in \\escfil02\2i11_mathcad\8307_bolts\multi_bolt_stiffness_nut_RevC

This file uses the calculations shown in \\escfil02\2i11_mathcad\8307_bolts\multi_bolt_stiffness_nut_FS_RevC

Fail-Safe Stiffness File

Bolt Fail-safe Load data

Joint separation load $\max(Psep_FS) = \mathbf{5486.101} \cdot lbf$ $\max(P_FS) = \mathbf{5486.101}\, lbf$

Max bolt load (Ult) $\max(Pb_FS) = \mathbf{10072} \cdot lbf$ $\max(V_FS) = \mathbf{1223.799}\, lbf$

Summary of Fail-Safe Margins Removing Bolt 2

Joint separation $MS_minFS_{1,1} = \mathbf{-0.35}$

Direct Tension Ult $MS_minFS_{2,1} = \mathbf{0.74}$

Total Tension Ult $MS_minFS_{3,1} = \mathbf{0.09}$

Direct Thread shear Ult $MS_minFS_{4,1} = \mathbf{1.51}$

Total Thread shear Ult $MS_minFS_{5,1} = \mathbf{0.57}$

Shear Ult $MS_minFS_{6,1} = \mathbf{4.30}$

Bending Ult $MS_minFS_{7,1} = \mathbf{10.00}$

Combined shear, tension and bending Ult $MS_minFS_{8,1} = \mathbf{0.09}$

Smallest Fail-Safe Margin of Safety for the Bolt, and the Failure Mode

$MSbolt_FS := \min(MS_FS)$

$MSbolt_FS = \mathbf{-0.35}$ $Failure_Mode_FS = \mathbf{"Joint\ Separation"}$

$MS_min_ID = \mathbf{801559003}$ Element Identification (801559) and Bolt Number (3) for Minimum Margin

$MS_min_LC = \mathbf{5032}$ Load Case Number for Minimum Margin

$MS_min_P = \mathbf{5486.1}$ Applied Tensile Load for Minimum Margin

$MS_min_V = \mathbf{267.2}$ Applied Shear Load for Minimum Margin

$MS_min_M = \mathbf{0}$ Applied Bending Moment for Minimum Margin

4.12.6 Vertex Bracket to PAS Platform Bolted Interface

Section 4.12.6 Vertex Bracket to PAS Platform Bolted Interface

The Vertex Bracket to PAS Platform Bolt Analysis is performed in the following report sections.

4.12.6.1	Vertex Bracket to PAS Platform
4.12.6.1	Vertex Bracket to PAS Platform Fail Safe
4.12.6.2	Vertex Bracket to PAS Platform Shear Bolt Analysis
4.12.6.2	Vertex Bracket to PAS Platform Shear Bolt Analysis - Fail Safe

4.12.6.1 Vertex Bracket to PAS Platform

Section 4.12.6.1

PAS Vertex Bracket to PAS Platform Bolt Analysis

There are a total of 4 fasteners attaching one end of the vertex bracket to the PAS platform. Three fasteners are NAS1956C30 (180 ksi), 0.375-24 UNFJ and 1 fastener is NAS1160-6 (shear bolt). The drawing number for the Vertex Bracket Installation is SGG39135873.

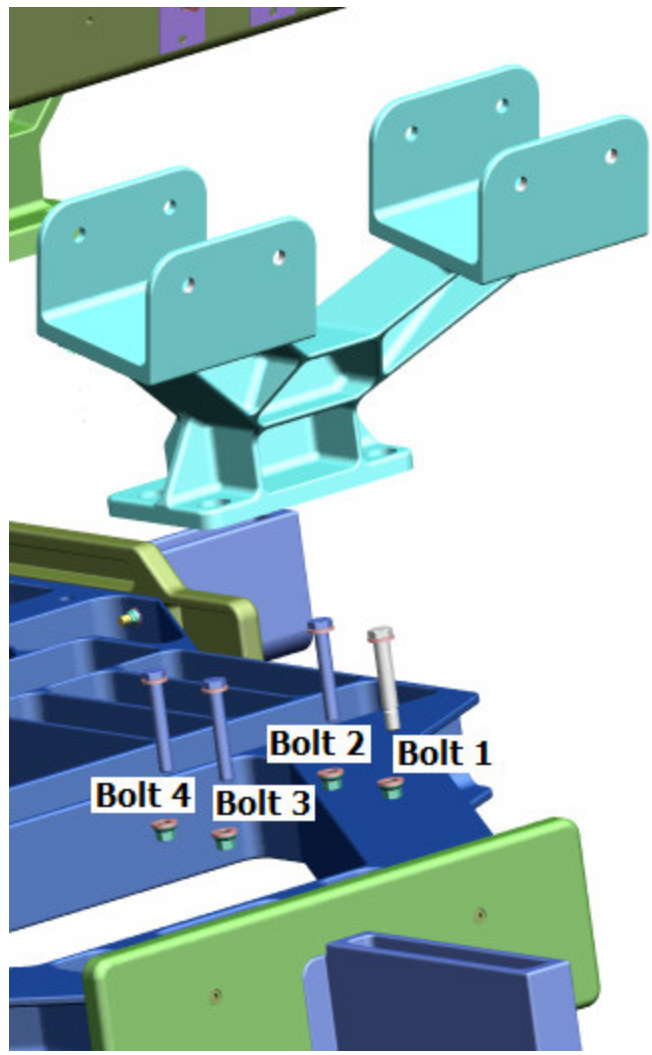

Bolt Geometry

size thread/in

$$bolt := \begin{pmatrix} 0.375 & 24 \\ 0.375 & 24 \\ 0.375 & 24 \\ 0.375 & 24 \end{pmatrix}$$

$i := 1 .. rows(bolt)$

$N_i := bolt_{i,2} \cdot \frac{1}{in}$ pitch of bolt

$D_i := bolt_{i,1} \cdot in$ bolt diameter

Tensile Area of bolt

$$At_i := \beta \cdot \left(\frac{D_i - 0.9743 \cdot \frac{1}{N_i}}{2} \right)^2$$

Shear Area of bolt

$$As_i := \beta \cdot \left(\frac{D_i - 1.299038 \cdot \frac{1}{N_i}}{2} \right)^2$$

Prepared By	B. Dyer	5/21/07	Engineering and Science Contract Group *Structural Analysis Section*	File Name Vert_PAS_r5.xmcd
Revised By	Kent Peters	5/22/09		
Checked By	C. Bala			Drawing No. SGG39135873
Title	**Bolts from PAS Vertex Bracket to PAS Platform**			

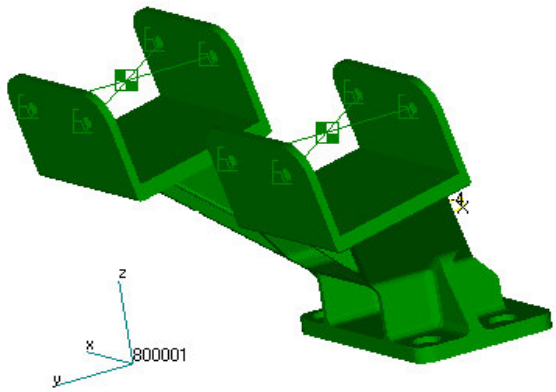

(Note z direction is tension and xy are shear.)

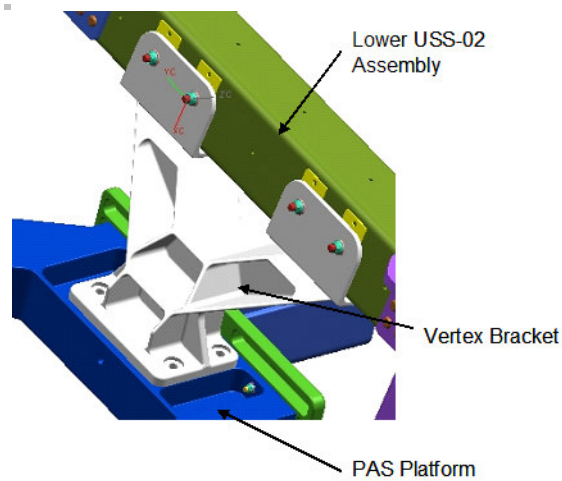

Bolt Pattern

Bolt no.	x coordinates	y coordinates	z coordinates
$\begin{pmatrix}1\\2\\3\\4\end{pmatrix}$	$x := \begin{pmatrix}-2.75\\-2.75\\2.75\\2.75\end{pmatrix}\cdot in$	$y := \begin{pmatrix}1.25\\-1.25\\1.25\\-1.25\end{pmatrix}\cdot in$	$z := \begin{pmatrix}0\\0\\0\\0\end{pmatrix} in$

Location of applied forces and moments

$xforce := 0.0 in$ $\quad yforce := 0.0 in$ $\quad zforce := 0.0 in$

$$cgload := \begin{pmatrix}xforce\\yforce\\zforce\end{pmatrix} \qquad cgload = \begin{pmatrix}0.00\\0.00\\0.00\end{pmatrix}\cdot in$$

Center of gravity of bolt group

$$xcg := \frac{\sum_i x_i}{rows(x)} \quad xcg = 0.00\cdot in \qquad ycg := \frac{\sum_i y_i}{rows(y)} \quad ycg = 0.00\cdot in \qquad zcg := \frac{\sum_i z_i}{rows(z)} \quad zcg = 0.00\cdot in$$

$$cg_{bolt} := \begin{pmatrix}xcg\\ycg\\zcg\end{pmatrix} \qquad cg_{bolt} = \begin{pmatrix}0.00\\0.00\\0.00\end{pmatrix}\cdot in$$

Note Since the z direction is into the plate the loads are shared equally between the bolts. The x and y axis have a zero offset from the center of gravity.

Load Vector

$r_{load} := cgload - cg_{bolt}$ $\qquad r_{load} = \begin{pmatrix} 0.00 \\ 0.00 \\ 0.00 \end{pmatrix} \cdot in$

Distance from CG of Bolts to Individual Bolts for shear calculations

$r_i := \sqrt{(x_i - xcg)^2 + (y_i - ycg)^2}$ $\qquad r = \begin{pmatrix} 3.021 \\ 3.021 \\ 3.021 \\ 3.021 \end{pmatrix} \cdot in$

Loads model 2-06 with the detailed PAS was used to retrieve loads at the bolted interface. These loads are read into an array and distributed out to the 4 bolts for the Vertex Bracket.

Note: In the FEA model the loads are recovered from CBUSH element. End B is connected to the PAS Platform and end A is connected to the Vertex bracket. Using equation shown in remark 10 of the MSC nastran reference manual Ke=(UB-UA) if UA >UB a tensile force will be present. This template is derived in the reverse direction and input loads are adjusted accordingly.

```
Element 710008 -  Property 700002  Nodes   710004   710001
```

Note This joint was checked for minimum margins of safety for on-orbit, liftoff, abort landing and berthing load cases.

Reading database file for bolted joint

See Appendix A22 for NASPOST data.

data := READPRN("**boltsVertPlatform.txt**")

$j := 1 .. rows(data)$

$num_bolts := rows(bolt)$

Note that "boltsVertPlatform.txt" is generated from NASPOST result (.LIS file) by just removing all words and comments. This file is archived along with the other analysis files, see Appendix A22.

Element Identification $\qquad ID_j := (data)_{j,1}$ $\qquad ID_j := ID_j \cdot 1000 + 1$ Counter for number of bolts in pattern

Load Case Number $\qquad LC_j := (data)_{j,2}$

Applied Bending Moment at Bolts $\qquad M_j := 0 \cdot in \cdot lbf$

Shear in X axis $\qquad Fx_j := -data_{j,3} \cdot lbf$ $\qquad$ Moment about X axis $\qquad Mx_j := -data_{j,6} \cdot in \cdot lbf$

Shear in Y axis $\qquad Fy_j := -data_{j,4} \cdot lbf$ $\qquad$ Moment about Y axis $\qquad My_j := -data_{j,7} \cdot in \cdot lbf$

Axial Load $\qquad Fz_j := -data_{j,5} \cdot lbf$ $\qquad$ Torsion $\qquad Mz_j := -data_{j,8} \cdot in \cdot lbf$

Format of Output File

The stack commands below are used to stack the element identifications (ID) and load cases (LC) in ascending order per bolt. The element ID number is located in the first column and the LC numbers in the second column.

$ID := stack(ID, ID + \mathbf{1}, ID + \mathbf{2}, ID + \mathbf{3})$

$LC := stack(LC, LC, LC, LC)$

Moment Distribution

$$M_{tot}^{\langle j \rangle} := \begin{pmatrix} Mx_j \\ My_j \\ Mz_j \end{pmatrix} + r_{load} \times \begin{pmatrix} Fx_j \\ Fy_j \\ Fz_j \end{pmatrix}$$

Use the cross-product to determine the additional moments acting on the fasteners.

$Mx_boltcg_j := M_{tot_{\mathbf{1},j}}$ $\quad$ $My_boltcg_j := M_{tot_{\mathbf{2},j}}$ $\quad$ $Mz_boltcg_j := M_{tot_{\mathbf{3},j}}$

Tension on bolts

$$Ftdirect_{i,j} := \frac{Fz_j}{num_bolts}$$

Direct tensile load calculation

$$Fmx_{i,j} := \begin{cases} \mathbf{0} \cdot lbf & \text{if } (y_i - ycg) = \mathbf{0} \cdot in \\ \dfrac{\left[Mx_boltcg_j \cdot (y_i - ycg)\right] At_i}{\sum_i \left[(y_i - ycg)^{\mathbf{2}} \cdot At_i\right]} \end{cases}$$

Tensile due to the moment about X

$$Fmy_{i,j} := \begin{cases} \mathbf{0} \cdot lbf & \text{if } (x_i - xcg) = \mathbf{0} \cdot in \\ \dfrac{-My_boltcg_j \cdot (x_i - xcg) \cdot At_i}{\sum_i \left[(x_i - xcg)^{\mathbf{2}} \cdot At_i\right]} \end{cases}$$

Tensile due to the moment about Y

$$Ft_{i,j} := Ftdirect_{i,j} + Fmx_{i,j} + Fmy_{i,j}$$

Shear on bolts

Secondary shear on bolts $\quad Fs_{i,j} := \dfrac{Mz_boltcg_j \cdot r_i \cdot As_i}{\sum_i \left[(r_i)^2 \cdot (As_i) \right]}$

$u_i := \mathrm{atan2}(x_i - xcg, y_i - ycg)$

Shear

$Sy_{i,j} := \sin\left(\dfrac{\beta}{2} - u_i\right) \cdot Fs_{i,j} \qquad Sx_{i,j} := -\cos\left(\dfrac{\beta}{2} - u_i\right) \cdot Fs_{i,j} \qquad u = \begin{pmatrix} 155.6 \\ -155.6 \\ 24.4 \\ -24.4 \end{pmatrix} \cdot deg$

Loads of first case

$Sx^{\langle 1 \rangle} = \begin{pmatrix} -48.90 \\ 48.90 \\ -48.90 \\ 48.90 \end{pmatrix} lbf \qquad Sy^{\langle 1 \rangle} = \begin{pmatrix} -107.59 \\ -107.59 \\ 107.59 \\ 107.59 \end{pmatrix} lbf$

$Fstot_{i,j} := \sqrt{\left(Sx_{i,j} + \dfrac{Fx_j}{2}\right)^2 + \left(Sy_{i,j} + \dfrac{Fy_j}{2}\right)^2}$

$\max(Fstot) = 1343.05\, lbf$

$\min(Fstot) = 3.04\, lbf$

Assume that Fx and Fy are shared by only 2 bolts.

The stack commands below are used to stack applied axial load (P), applied shear load (V), and applied moment (M) in ascending order per bolt. These loads are put into an array with the element/bolt number and load case number from above.

$P := \mathrm{stack}\left[(Ft^T)^{\langle 1 \rangle}, (Ft^T)^{\langle 2 \rangle}, (Ft^T)^{\langle 3 \rangle}, (Ft^T)^{\langle 4 \rangle} \right]$

$V := \mathrm{stack}\left[(Fstot^T)^{\langle 1 \rangle}, (Fstot^T)^{\langle 2 \rangle}, (Fstot^T)^{\langle 3 \rangle}, (Fstot^T)^{\langle 4 \rangle} \right]$

$M := \mathrm{stack}(M, M, M, M)$

The "Output" file outputs an array from left to right starting with the element identification (ID), Load case number (LC), applied load on the bolt (P), applied shear on the bolt (V), and applied moment on the bolt (M). The array is then written to a text file.

$Output := \mathrm{augment}\left(ID, LC, \dfrac{P}{lbf}, \dfrac{V}{lbf}, \dfrac{M}{in \cdot lbf}\right)$

Note Since the ID and LC numbers are dimensionless, the P, V, and M values are divided by their units in order to make the array dimensionless.

Size of the "Output" Array $\quad \mathrm{rows}(Output) = 1024$

(4 bolts x 256 load cases) x 1 joint = 1024 rows

WRITEPRN(**"output_vertpas_r5_onorbit.txt"**) := Output

CHECK Bolts (NAS1956C30 0.375"-24 x 2.453 L Material-A-286), Nut (NAS1805-6), Washer (NAS1587-6C)

data := READPRN("**output_vertpas_r5_onorbit.txt**")

s := **1** .. rows(data)

Flange 1 Vertex Bracket
Part number SDG39135813
Material 7050-T7451

Flange 2 PAS Platform
Part number SDG39135817
Material 7050-T7451

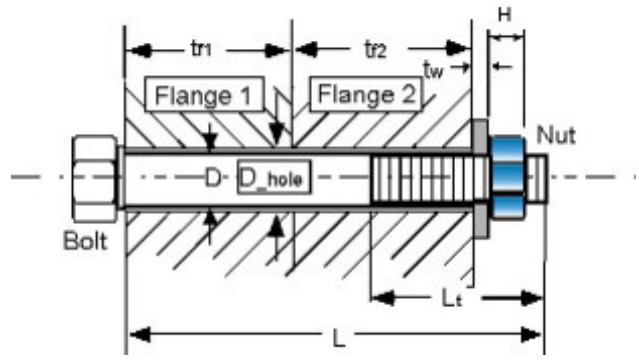

Loads

Applied tensile load	$P_s := data_{s,3} \cdot lbf$	$ID_s := data_{s,1}$
Applied shear load	$V_s := data_{s,4} \cdot lbf$	$LC_s := data_{s,2}$
Applied bending moment	$M_s := data_{s,5} \cdot in \cdot lbf$	

Factors of Safety

Ultimate	SFu := **2.0**	Yield	SFy := **1.25**
Joint Separation	SFsep := **1.2**	Fitting factor	FF := **1.15**

Temperature data

Assembly	Temp_initial := **70**·deg
Maximum	Temp_max := **151**·deg
Minimum	Temp_min := −**43**·deg

Bolt and Nut Data

Nominal diameter of bolt	D := **.375**·in	Number of threads/inch	$Nt := 24 \cdot \frac{1}{in}$
Total length of bolt	L := **2.453**·in	Height of nut	H := **0.375**·in
Threaded length	Lt := **0.578**·in	(If bolt is fully threaded, input Lt = L)	

This file uses the calculations shown in \\escfil02\2i11_mathcad\8307_bolts\thread_data.mcd

Washer Data

Thickness of washers	tw := **0.156**·in
Outer Diameter of washer	Dw := **0.687**in
Inner Diameter of washer	Dwi := **0.378**·in
Bolt head dia. across flats	dw := **0.553**·in

Note If there is no washer tw, Dw and Dwi should be zero

Flange data

Thickness of flange 1	tf1 := **.325**·in
Thickness of flange 2	tf2 := **1.50**in
Diameter of hole	D_hole := **0.428**·in

(used only if there is no washer)

Material Property Data

Bolt

Temperature correction factor bolt strength $TSu_bolt := \mathbf{0.96}$ Yield $TSy_bolt := \mathbf{0.96}$

Bolt ultimate tensile allowable stress $Ftu_bolt := \mathbf{180000} \cdot psi$

Bolt ultimate shear allowable stress $Fsu_bolt := \mathbf{0.6} \cdot Ftu_bolt$

Bolt yield Tensile allowable stress $Fty_bolt := \mathbf{132353} \cdot psi$

Temperature correction factor for bolt modulus $TE_bolt := \mathbf{0.96}$

Modulus of elasticity of bolt $E_bolt := \left(\mathbf{29.1} \cdot \mathbf{10}^{\mathbf{6}} \cdot psi\right)$

Thermal coefficient for bolt

$_bolt_hot := \mathbf{9.1} \cdot \mathbf{10}^{-\mathbf{6}} \cdot \frac{\frac{in}{in}}{deg}$

$_bolt_cold := \mathbf{8.7} \cdot \mathbf{10}^{-\mathbf{6}} \cdot \frac{\frac{in}{in}}{deg}$

Nut

Temperature correction factor for nut strength $TS_nut := \mathbf{0.96}$

Ultimate tensile allowable stress $Ftu_nut := \mathbf{180000} \cdot psi$

Ultimate Shear allowable stress $Fsu_nut := \mathbf{0.6} \cdot Ftu_nut$

Ultimate axial strength of nut $Ptu_nut := \mathbf{16488} \cdot lbf$ (180/125=1.44, 11450*1.44=16488, Ref.NAS1291)

Washer

Temperature correction factor for washer modulus $TE_washer := \mathbf{.96}$

Modulus of elasticity of washer $E_washer := \left(\mathbf{29.1} \cdot \mathbf{10}^{\mathbf{6}} \cdot psi\right)$

Flanges

Stiffness of the joint depends upon number of members in the grip of the fasteners, Modulus of elasticity of these members, and diameters of the bolt and the washer.

Temperature correction factor for flange 1 $Tf1E := \mathbf{.98}$ (modulus)

Temperature correction factor for flange 2 $Tf2E := \mathbf{.98}$

Modulus of elasticity for the parts in the joint $E_flange1 := \left(\mathbf{10.3} \cdot \mathbf{10}^{\mathbf{6}} \cdot psi\right)$ $E_flange2 := \left(\mathbf{10.3} \cdot \mathbf{10}^{\mathbf{6}} \cdot psi\right)$

Coefficient of thermal expansion for flanges

$_flange1_hot := \mathbf{12.8} \cdot \mathbf{10}^{-\mathbf{6}} \cdot \frac{\frac{in}{in}}{deg}$ $_flange2_hot := \mathbf{12.8} \cdot \mathbf{10}^{-\mathbf{6}} \cdot \frac{\frac{in}{in}}{deg}$

$_flange1_cold := \mathbf{12.1} \cdot \mathbf{10}^{-\mathbf{6}} \cdot \frac{\frac{in}{in}}{deg}$ $_flange2_cold := \mathbf{12.1} \cdot \mathbf{10}^{-\mathbf{6}} \cdot \frac{\frac{in}{in}}{deg}$

Torque/Preload data

Maximum torque (66% of yield) $Tmax := \mathbf{420} \cdot in \cdot lbf$ Loading plane factor $n := \mathbf{0.5}$

Minimum torque (95% of max. torque) $Tmin := \mathbf{399} in \cdot lbf$ Preload Uncertainty $= := \mathbf{0.25}$

Torque coefficient $k := \mathbf{0.15}$

This file uses the calculations shown in \\escfil02\2i11_mathcad\8307_bolts\multi_bolt_stiffness_nut_RevC

Bolt Load data

Bolt/joint stiffness factor	$y = \mathbf{0.290}$	Temperature Preload	$Pthr_pos = \mathbf{595.9} \cdot lbf$
Max preload	$PLDmax = \mathbf{9929.2} \cdot lbf$		$Pthr_neg = -\mathbf{763.9} \cdot lbf$
Min preload	$PLDmin = \mathbf{4089} \cdot lbf$	Uncertainty factor	$= = \mathbf{0.25}$
Joint separation load	$max(Psep) = \mathbf{4109} \cdot lbf$	Torque coefficient	$k = \mathbf{0.15}$
Max bolt load (ultimate)	$max(Pb) = \mathbf{11070} \cdot lbf$	Loading plane factor	$n = \mathbf{0.50}$
Max bolt load (yield)	$max(Pby) = \mathbf{10643} \cdot lbf$	Thread pullout strength required to develop full strength of bolt	$PAs = \mathbf{17818} \cdot lbf$
Bolt tensile ult strength	$PAt = \mathbf{14848} \cdot lbf$	Nut tensile ult strength	$Ptu_nut = \mathbf{15828} \cdot lbf$

Summary of Margins for bolt

Length_check = **"Bolt length is sufficient"**

Joint separation	$MS_min_{1,1} = \mathbf{0.01}$	Direct Thread shear Ult	$MS_min_{6,1} = \mathbf{1.26}$
Direct Tension Ultimate	$MS_min_{2,1} = \mathbf{0.89}$	Total Thread shear Ult	$MS_min_{7,1} = \mathbf{0.61}$
Direct Tension Yield	$MS_min_{3,1} = \mathbf{1.22}$	Shear Ultimate	$MS_min_{8,1} = \mathbf{2.71}$
Total Tension Ultimate	$MS_min_{4,1} = \mathbf{0.34}$	Bending Ultimate	$MS_min_{9,1} = \mathbf{10.00}$
Total Tension Yield	$MS_min_{5,1} = \mathbf{0.03}$	Combined shear, tension and bending ultimate	$MS_min_{10,1} = \mathbf{0.32}$

Determination of the smallest margin of safety for the bolt, and the failure mode

$MSbolt := min(MS)$

$MSbolt = \mathbf{0.01}$ Failure_Mode = **"Joint Separation"**

$MS_min_ID = \mathbf{710008002}$	Element Identification (710008) and Bolt Number (2) for Minimum Margin
$MS_min_LC = \mathbf{5031}$	Load Case Number for Minimum Margin
$MS_min_P = \mathbf{3424}$	Applied Tensile Load for Minimum Margin
$MS_min_V = \mathbf{1218.6}$	Applied Shear Load for Minimum Margin
$MS_min_M = \mathbf{0}$	Applied Bending Moment for Minimum Margin

Bolt Fail-Safe Analysis for Vertex Bracket to PAS Platform Removing Bolt 4

Fail-safe analysis is done by removing one bolt at a time and the analysis is repeated 4 times. There are now 3, NAS1956C30 (180 ksi), 0.375-24 UNFJ fasteners, holding the Vertex Bracket to the PAS platform. The drawing number for the Vertex Bracket Installation is SGG39135873.

size thread/in

$$bolt2 := \begin{pmatrix} 0.375 & 24 \\ 0.375 & 24 \\ 0.375 & 24 \end{pmatrix}$$

$s := 1 .. rows(bolt2)$

$N2_s := bolt2_{s,2} \cdot \frac{1}{in}$ pitch of bolt

$D2_s := bolt2_{s,1} \cdot in$ bolt diameter

Tensile Area of bolt

$$At2_s := \beta \cdot \left(\frac{D2_s - 0.9743 \cdot \frac{1}{N2_s}}{2} \right)^2$$

Shear Area of bolt

$$As2_s := \beta \cdot \left(\frac{D2_s - 1.299038 \cdot \frac{1}{N2_s}}{2} \right)^2$$

Bolt Pattern

Bolt no. x coordinate y coordinate z coordinate

$$\begin{pmatrix} 1 \\ 2 \\ 3 \end{pmatrix} \quad x2 := \begin{pmatrix} -2.75 \\ -2.75 \\ 2.75 \end{pmatrix} \cdot in \quad y2 := \begin{pmatrix} 1.25 \\ -1.25 \\ 1.25 \end{pmatrix} \cdot in \quad z2 := \begin{pmatrix} 0 \\ 0 \\ 0 \end{pmatrix} in$$

Note Bolt 4 is removed from the bolt pattern.

Location of applied forces and moments

$xforce2 := \mathbf{0.0}in$ $\quad yforce2 := \mathbf{0.0}in$ $\quad zforce2 := \mathbf{0.0}in$

$$cgload2 := \begin{pmatrix} xforce2 \\ yforce2 \\ zforce2 \end{pmatrix} \qquad cgload2 = \begin{pmatrix} \mathbf{0.00} \\ \mathbf{0.00} \\ \mathbf{0.00} \end{pmatrix} \cdot in$$

Center of gravity of bolt group

$$xcg2 := \frac{\sum_s x2_s}{rows(x2)} \quad xcg2 = -\mathbf{0.92} \cdot in \qquad ycg2 := \frac{\sum_s y2_s}{rows(y2)} \quad ycg2 = \mathbf{0.42} \cdot in \qquad zcg2 := \frac{\sum_s z2_s}{rows(z2)} \quad zcg2 = \mathbf{0.00} \cdot in$$

$$cg_{bolt2} := \begin{pmatrix} xcg2 \\ ycg2 \\ zcg2 \end{pmatrix} \qquad cg_{bolt2} = \begin{pmatrix} -\mathbf{0.92} \\ \mathbf{0.42} \\ \mathbf{0.00} \end{pmatrix} \cdot in$$

Note Since the z direction is into the plate the loads are shared equally between the bolts. However, due to a failure in bolt 4, the x and y directions in the bolt pattern are unsymmetric and have a offset from the center of gravity.

Load Vector

$$r_{load2} := cgload2 - cg_{bolt2} \qquad r_{load2} = \begin{pmatrix} \mathbf{0.92} \\ -\mathbf{0.42} \\ \mathbf{0.00} \end{pmatrix} \cdot in$$

Distance from CG of Bolts to Individual Bolts for shear calculations

$$r2_s := \sqrt{(x2_s - xcg2)^2 + (y2_s - ycg2)^2} \qquad r2_s = \begin{pmatrix} \mathbf{2.014} \\ \mathbf{2.478} \\ \mathbf{3.760} \end{pmatrix} \cdot in$$

Reading database file for bolted joint

data := READPRN("**boltsVertPlatform.txt**")

$q := \mathbf{1} .. rows(data)$ $\quad num_bolts2 := rows(bolt2)$

Loads from 2-06 loads model

Shear in X axis $Fx2_q := -data_{q,\mathbf{3}} \cdot lbf$

Moment about X axis $Mx2_q := -data_{q,\mathbf{6}} \cdot in \cdot lbf$

Shear in Y axis $Fy2_q := -data_{q,\mathbf{4}} \cdot lbf$

Moment about Y axis $My2_q := -data_{q,\mathbf{7}} \cdot in \cdot lbf$

Axial Load $Fz2_q := -data_{q,\mathbf{5}} \cdot lbf$

Torsion $Mz2_q := -data_{q,\mathbf{8}} \cdot in \cdot lbf$

Element Identification $ID2_q := data_{q,\mathbf{1}}$

$ID2_q := ID2_q \cdot \mathbf{1000} + \mathbf{1}$ Counter for number of bolts in pattern

Load Case Number $LC2_q := data_{q,\mathbf{2}}$

Applied Bending Moment at Bolts $M2_q := \mathbf{0} \cdot in \cdot lbf$

Format of Output File

The stack command below is used to stack the element identifications (ID2) and load cases (LC2) in ascending order per bolt. See the array example above for explanation.
Note bolt number 4 is not included.

$ID2 := stack(ID2, ID2 + \mathbf{1}, ID2 + \mathbf{2})$

$LC2 := stack(LC2, LC2, LC2)$

Moment Distribution

$$M_{tot2}^{\langle q \rangle} := \begin{pmatrix} Mx2_q \\ My2_q \\ Mz2_q \end{pmatrix} + r_{load2} \times \begin{pmatrix} Fx2_q \\ Fy2_q \\ Fz2_q \end{pmatrix}$$

Use the cross-product to determine the additional moments acting on the fasteners.

$Mx_boltcg2_q := M_{tot2_{\mathbf{1},q}}$ $My_boltcg2_q := M_{tot2_{\mathbf{2},q}}$ $Mz_boltcg2_q := M_{tot2_{\mathbf{3},q}}$

Tension on bolts

$$Ftdirect2_{s,q} := \frac{Fz2_q}{num_bolts2}$$

Direct tensile load calculation

$$Fmx2_{s,q} := \begin{cases} \mathbf{0} \cdot lbf & \text{if } (y2_s - ycg2) = \mathbf{0} \cdot in \\ \dfrac{[Mx_boltcg2_q \cdot (y2_s - ycg2)] At2_s}{\sum_s [(y2_s - ycg2)^{\mathbf{2}} \cdot At2_s]} & \end{cases}$$

$$Fmy2_{s,q} := \begin{cases} \mathbf{0} \cdot lbf & \text{if } (x2_s - xcg2) = \mathbf{0} \cdot in \\ \dfrac{-[My_boltcg2_q \cdot (x2_s - xcg2)] \cdot At2_s}{\sum_s [(x2_s - xcg2)^{\mathbf{2}} \cdot At2_s]} & \end{cases}$$

$Ft2_{s,q} := Ftdirect2_{s,q} + Fmx2_{s,q} + Fmy2_{s,q}$

Total Tensile load

Shear on bolts

Secondary shear on bolts $Fs2_{s,q} := \dfrac{Mz_boltcg2_q \cdot r2_s \cdot As2_s}{\sum_s \left[(r2_s)^2 \cdot (As2_s) \right]}$

$u_s := \mathrm{atan2}(x2_s - xcg2, y2_s - ycg2)$

Shear

$Sx := 0$ $\quad Sy := 0$

$Sy_{s,q} := \sin\left(\dfrac{\beta}{2} - u_s\right) \cdot Fs2_{s,q}$ $\quad Sx_{s,q} := -\cos\left(\dfrac{\beta}{2} - u_s\right) \cdot Fs2_{s,q}$

Loads of first case

$Sx^{\langle 1 \rangle} = \begin{pmatrix} -106.99 \\ 213.99 \\ -106.99 \end{pmatrix} \mathrm{lbf}$ $\quad Sy^{\langle 1 \rangle} = \begin{pmatrix} -235.39 \\ -235.39 \\ 470.78 \end{pmatrix} \mathrm{lbf}$ $\quad u_s = \begin{pmatrix} 155.6 \\ -137.7 \\ 12.8 \end{pmatrix} \cdot \mathrm{deg}$

$Fstot2_{s,q} := \sqrt{\left(Sx_{s,q} + \dfrac{Fx_q}{2}\right)^2 + \left(Sy_{s,q} + \dfrac{Fy_q}{2}\right)^2}$

$\max(Fstot2) = 1735.91\,\mathrm{lbf}$

Assume that Fx and Fy are shared by only 2 bolts.

$\min(Fstot2) = 9.34\,\mathrm{lbf}$

The stack commands below are used to stack applied axial load (P2), applied shear load (V2), and applied moment (M2) in ascending order per bolt. These loads are put into an array with the element/bolt number and load case number from above. See the "Output2" file below.
Note there are only 3 bolts, since bolt number 4 is not included.

$P2 := \mathrm{stack}\left[(Ft2^T)^{\langle 1 \rangle}, (Ft2^T)^{\langle 2 \rangle}, (Ft2^T)^{\langle 3 \rangle} \right]$

$V2 := \mathrm{stack}\left[(Fstot2^T)^{\langle 1 \rangle}, (Fstot2^T)^{\langle 2 \rangle}, (Fstot2^T)^{\langle 3 \rangle} \right]$

$M2 := \mathrm{stack}(M2, M2, M2)$

The "Output2" file below outputs an array from left to right starting with the element identification (ID2), Load case number (LC2), applied load on the bolt (P2), applied shear on the bolt (V2), and applied moment on the bolt (M2). See the output array example above. The array is written to a text file.

$Output2 := \mathrm{augment}\left(ID2, LC2, \dfrac{P2}{\mathrm{lbf}}, \dfrac{V2}{\mathrm{lbf}}, \dfrac{M2}{\mathrm{in \cdot lbf}}\right)$

Note Since the ID2 and LC2 numbers are dimensionless, the P2, V2, and M2 values are divided by their units in order to make the array dimensionless.

Size of the "Output2" Array $\quad \mathrm{rows}(Output2) = 768$

(3 bolts x 256 load cases) x 1 joint = 768 rows

WRITEPRN(**"output_vertpas_r5_onorbit_fs1.txt"**) := Output2

Bolt Fail-safe Results

The array from the text file above is read

data_fs := READPRN("**output_vertpas_r5_onorbit_fs1.txt**")

s := **1** .. rows(data_fs)

Fail-safe Loads

Applied tensile load $P_FS_s := data_fs_{s,\mathbf{3}} \cdot lbf$ $ID_FS_s := data_fs_{s,\mathbf{1}}$

Applied shear load $V_FS_s := data_fs_{s,\mathbf{4}} \cdot lbf$ $LC_FS_s := data_fs_{s,\mathbf{2}}$

Applied bending moment $M_FS_s := data_fs_{s,\mathbf{5}} \cdot in \cdot lbf$

Fail-safe Factors of Safety

Ultimate SFu_FS := **1.0**

Joint Separation SFsep_FS := **1.0**

This file uses the calculations shown in \\escfil02\2i11_mathcad\8307_bolts\multi_bolt_stiffness_nut_FS_RevC

Fail-Safe Stiffness File

Bolt Fail-safe Load data

Joint separation load $\max(Psep_FS) = \mathbf{6882.36}\,lbf$ $\max(Pb_FS) = \mathbf{11076.2}\cdot lbf$

Max bolt load (ultimate) $\max(P_FS) = \mathbf{6882.362}\,lbf$

$\max(V_FS) = \mathbf{1735.907}\,lbf$

Summary of fail-safe Margins Removing Bolt 4

Joint separation	$MS_minFS_{1,1} = -\mathbf{0.40}$	Total Thread shear Ult	$MS_minFS_{5,1} = \mathbf{0.61}$
Direct Tension Ultimate	$MS_minFS_{2,1} = \mathbf{0.88}$	Shear Ultimate	$MS_minFS_{6,1} = \mathbf{4.74}$
Total Tension Ultimate	$MS_minFS_{3,1} = \mathbf{0.34}$	Bending Ultimate	$MS_minFS_{7,1} = \mathbf{10.00}$
Direct Thread shear Ultimate	$MS_minFS_{4,1} = \mathbf{1.25}$	Combined shear, tension and bending ultimate	$MS_minFS_{8,1} = \mathbf{0.34}$

Determination of the smallest fail-safe margin of safety for the bolt, and the failure mode

$MSbolt_FS := \min(MS_FS)$

$MSbolt_FS = -\mathbf{0.40}$ Failure_Mode_FS = **"Joint Separation"**

(Note: A negative margin of safety for joint separation is acceptable for fail-safe.)

MS_min_ID = **710008002**	Element Identification (710008) and Bolt Number (2) for Minimum Margin
MS_min_LC = **5031**	Load Case Number for Minimum Margin
MS_min_P = **6882.4**	Applied Tensile Load for Minimum Margin
MS_min_V = **1083.1**	Applied Shear Load for Minimum Margin
MS_min_M = **0**	Applied Bending Moment for Minimum Margin

Bolt Fail-Safe Analysis for Aft Bracket to PAS Platform Removing Bolt 3

Fail-safe analysis is done by removing one bolt at a time and the analysis is repeated 4 times. There are now 3, NAS1956C30 (180 ksi), 0.375-24 UNFJ fasteners, holding the Vertex Bracket to the PAS platform. The drawing number for the Vertex Bracket Installation is SGG39135873.

size thread/in

$$bolt2 := \begin{pmatrix} 0.375 & 24 \\ 0.375 & 24 \\ 0.375 & 24 \end{pmatrix}$$

$s := 1 .. rows(bolt2)$

$N2_s := bolt2_{s,2} \cdot \frac{1}{in}$ pitch of bolt

$D2_s := bolt2_{s,1} \cdot in$ bolt diameter

Tensile Area of bolt

$$At2_s := \beta \cdot \left(\frac{D2_s - 0.9743 \cdot \frac{1}{N2_s}}{2} \right)^2$$

Shear Area of bolt

$$As2_s := \beta \cdot \left(\frac{D2_s - 1.299038 \cdot \frac{1}{N2_s}}{2} \right)^2$$

Bolt Pattern

Bolt no.	x coordinate	y coordinate	z coordinate
$\begin{pmatrix} 1 \\ 2 \\ 4 \end{pmatrix}$	$x2 := \begin{pmatrix} -2.75 \\ -2.75 \\ 2.75 \end{pmatrix} \cdot in$	$y2 := \begin{pmatrix} 1.25 \\ -1.25 \\ -1.25 \end{pmatrix} \cdot in$	$z2 := \begin{pmatrix} 0 \\ 0 \\ 0 \end{pmatrix} in$

Note Bolt 3 is removed from the bolt pattern.

Location of applied forces and moments

$xforce2 := \mathbf{0.0}in$ $\quad yforce2 := \mathbf{0.0}in$ $\quad zforce2 := \mathbf{0.0}in$

$$cgload2 := \begin{pmatrix} xforce2 \\ yforce2 \\ zforce2 \end{pmatrix} \qquad cgload2 = \begin{pmatrix} \mathbf{0.00} \\ \mathbf{0.00} \\ \mathbf{0.00} \end{pmatrix} \cdot in$$

Center of gravity of bolt group

$$xcg2 := \frac{\sum_s x2_s}{rows(x2)} \quad xcg2 = -\mathbf{0.92} \cdot in \qquad ycg2 := \frac{\sum_s y2_s}{rows(y2)} \quad ycg2 = -\mathbf{0.42} \cdot in \qquad zcg2 := \frac{\sum_s z2_s}{rows(z2)} \quad zcg2 = \mathbf{0.00} \cdot in$$

$$cg_{bolt2} := \begin{pmatrix} xcg2 \\ ycg2 \\ zcg2 \end{pmatrix} \qquad cg_{bolt2} = \begin{pmatrix} -\mathbf{0.92} \\ -\mathbf{0.42} \\ \mathbf{0.00} \end{pmatrix} \cdot in$$

Note Since the z direction is into the plate the loads are shared equally between the bolts. However, due to a failure in bolt 3, the x and y directions in the bolt pattern are unsymmetric and have a offset from the center of gravity.

Load Vector

$$r_{load2} := cgload2 - cg_{bolt2} \qquad r_{load2} = \begin{pmatrix} \mathbf{0.92} \\ \mathbf{0.42} \\ \mathbf{0.00} \end{pmatrix} \cdot in$$

Distance from CG of Bolts to Individual Bolts for shear calculations

$$r2_s := \sqrt{(x2_s - xcg2)^2 + (y2_s - ycg2)^2} \qquad r2_s = \begin{pmatrix} \mathbf{2.478} \\ \mathbf{2.014} \\ \mathbf{3.760} \end{pmatrix} \cdot in$$

Reading database file for bolted joint

$ID2 := \mathbf{0}$ $\quad LC2 := \mathbf{0}$ $\quad M2 := \mathbf{0}$

$data := READPRN(\text{"boltsVertPlatform.txt"})$

$q := \mathbf{1} .. rows(data)$ $\qquad num_bolts2 := rows(bolt2)$

Loads from 2-06 loads model

Shear in X axis $Fx2_q := -data_{q,\mathbf{3}} \cdot lbf$

Moment about X axis $Mx2_q := -data_{q,\mathbf{6}} \cdot in \cdot lbf$

Shear in Y axis $Fy2_q := -data_{q,\mathbf{4}} \cdot lbf$

Moment about Y axis $My2_q := -data_{q,\mathbf{7}} \cdot in \cdot lbf$

Axial Load $Fz2_q := -data_{q,\mathbf{5}} \cdot lbf$

Torsion $Mz2_q := -data_{q,\mathbf{8}} \cdot in \cdot lbf$

Element Identification $ID2_q := data_{q,\mathbf{1}}$ $ID2_q := ID2_q \cdot \mathbf{1000} + \mathbf{1}$ Counter for number of bolts in pattern

Load Case Number $LC2_q := data_{q,\mathbf{2}}$

Applied Bending Moment at Bolts $M2_q := \mathbf{0} \cdot in \cdot lbf$

Format of Output File

The stack command below is used to stack the element identifications (ID2) and load cases (LC2) in ascending order per bolt. See the array example above for explanation.
Note bolt number 3 is not included.

$ID2 := stack(ID2, ID2 + \mathbf{1}, ID2 + \mathbf{3})$

$LC2 := stack(LC2, LC2, LC2)$

Moment Distribution

$$M_{tot2}^{\langle q \rangle} := \begin{pmatrix} Mx2_q \\ My2_q \\ Mz2_q \end{pmatrix} + r_{load2} \times \begin{pmatrix} Fx2_q \\ Fy2_q \\ Fz2_q \end{pmatrix}$$

Use the cross-product to determine the additional moments acting on the fasteners.

$Mx_boltcg2_q := M_{tot2_{\mathbf{1},q}}$ $My_boltcg2_q := M_{tot2_{\mathbf{2},q}}$ $Mz_boltcg2_q := M_{tot2_{\mathbf{3},q}}$

Tension on bolts

$$Ftdirect2_{s,q} := \frac{Fz2_q}{num_bolts2}$$

Direct tensile load calculation

$$Fmx2_{s,q} := \begin{cases} \mathbf{0} \cdot lbf & \text{if } (y2_s - ycg2) = \mathbf{0} \cdot in \\ \dfrac{[Mx_boltcg2_q \cdot (y2_s - ycg2)] At2_s}{\sum_s \left[(y2_s - ycg2)^{\mathbf{2}} \cdot At2_s \right]} & \end{cases}$$

$$Fmy2_{s,q} := \begin{cases} \mathbf{0} \cdot lbf & \text{if } (x2_s - xcg2) = \mathbf{0} \cdot in \\ \dfrac{-My_boltcg2_q \cdot (x2_s - xcg2) \cdot At2_s}{\sum_s \left[(x2_s - xcg2)^{\mathbf{2}} \cdot At2_s \right]} & \end{cases}$$

$Ft2_{s,q} := Ftdirect2_{s,q} + Fmx2_{s,q} + Fmy2_{s,q}$

Total Tensile load

Shear on bolts

Secondary shear on bolts $\quad Fs2_{s,q} := \dfrac{Mz_boltcg2_q \cdot r2_s \cdot As2_s}{\sum_s \left[(r2_s)^2 \cdot (As2_s) \right]}$

$u_s := \mathrm{atan2}(x2_s - xcg2, y2_s - ycg2)$

Shear $\quad Sx := 0 \qquad Sy := 0$

$Sy_{s,q} := \sin\left(\dfrac{\beta}{2} - u_s\right) \cdot Fs2_{s,q} \qquad Sx_{s,q} := -\cos\left(\dfrac{\beta}{2} - u_s\right) \cdot Fs2_{s,q}$

Loads of first case

$$Sx^{\langle 1 \rangle} = \begin{pmatrix} -226.49 \\ 113.24 \\ 113.24 \end{pmatrix} \mathrm{lbf} \qquad Sy^{\langle 1 \rangle} = \begin{pmatrix} -249.14 \\ -249.14 \\ 498.28 \end{pmatrix} \mathrm{lbf} \qquad u_s = \begin{pmatrix} 137.7 \\ -155.6 \\ -12.8 \end{pmatrix} \cdot \mathrm{deg}$$

$$Fstot2_{s,q} := \sqrt{\left(Sx_{s,q} + \frac{Fx_q}{2}\right)^2 + \left(Sy_{s,q} + \frac{Fy_q}{2}\right)^2}$$

$\max(Fstot2) = 1769.21\,\mathrm{lbf}$

Assume that Fx and Fy are shared by only 2 bolts. $\quad \min(Fstot2) = 8.26\,\mathrm{lbf}$

The stack commands below are used to stack applied axial load (P2), applied shear load (V2), and applied moment (M2) in ascending order per bolt. These loads are put into an array with the element/bolt number and load case number from above. See the "Output2" file below.
Note there are only 3 bolts, since bolt number 3 is not included.

$P2 := \mathrm{stack}\left[(Ft2^T)^{\langle 1 \rangle}, (Ft2^T)^{\langle 2 \rangle}, (Ft2^T)^{\langle 3 \rangle} \right]$

$V2 := \mathrm{stack}\left[(Fstot2^T)^{\langle 1 \rangle}, (Fstot2^T)^{\langle 2 \rangle}, (Fstot2^T)^{\langle 3 \rangle} \right]$

$M2 := \mathrm{stack}(M2, M2, M2)$

The "Output2" file below outputs an array from left to right starting with the element identification (ID2), Load case number (LC2), applied load on the bolt (P2), applied shear on the bolt (V2), and applied moment on the bolt (M2). See the output array example above. The array is written to a text file.

$Output2 := \mathrm{augment}\left(ID2, LC2, \dfrac{P2}{\mathrm{lbf}}, \dfrac{V2}{\mathrm{lbf}}, \dfrac{M2}{\mathrm{in} \cdot \mathrm{lbf}}\right)$

Note Since the ID2 and LC2 numbers are dimensionless, the P2, V2, and M2 values are divided by their units in order to make the array dimensionless.

Size of the "Output2" Array $\quad \mathrm{rows}(Output2) = 768$

(3 bolts x 256 load cases) x 1 joint = 768 rows

WRITEPRN(**"output_vertpas_r5_onorbit_fs2.txt"**) := Output2

Bolt Fail-safe Results

The array from the text file above is read

data_fs := READPRN("**output_vertpas_r5_onorbit_fs2.txt**") s := **1** .. rows(data_fs)

Fail-safe Loads

Applied tensile load $P_FS_s := data_fs_{s,\mathbf{3}} \cdot lbf$ $ID_FS_s := data_fs_{s,\mathbf{1}}$

Applied shear load $V_FS_s := data_fs_{s,\mathbf{4}} \cdot lbf$ $LC_FS_s := data_fs_{s,\mathbf{2}}$

Applied bending moment $M_FS_s := data_fs_{s,\mathbf{5}} \cdot in \cdot lbf$

Fail-safe Factors of Safety

Ultimate SFu_FS := **1.0**

Joint Separation SFsep_FS := **1.0**

Prepared By	B. Dyer	5/21/07	Engineering and Science Contract Group *Structural Analysis Section*	File Name Vert_PAS_r5.xmcd
Revised By	Kent Peters	5/22/09		
Checked By	C. Bala			Drawing No. SGG39135873
Title	Bolts from PAS Vertex Bracket to PAS Platform			

This file uses the calculations shown in \\escfil02\2i11_mathcad\8307_bolts\ multi_bolt_stiffness_nut_FS_RevC

Fail-Safe Stiffness File

Bolt Fail-safe Load data

Joint separation load	max(Psep_FS) = **3529.912** lbf	max(P_FS) = **3529.912** lbf
Max bolt load (ult)	max(Pb_FS) = **10517.5** lbf	max(V_FS) = **1769.206** lbf

Summary of fail-safe Margins Removing Bolt 3

Joint separation	$MS_minFS_{1,1}$ = **0.18**	Total Thread shear Ult	$MS_minFS_{5,1}$ = **0.69**
Direct Tension Ultimate	$MS_minFS_{2,1}$ = **2.66**	Shear Ultimate	$MS_minFS_{6,1}$ = **4.63**
Total Tension Ultimate	$MS_minFS_{3,1}$ = **0.41**	Bending Ultimate	$MS_minFS_{7,1}$ = **10.00**
Direct Thread shear Ult	$MS_minFS_{4,1}$ = **3.39**	Combined shear, tension and bending ultimate	$MS_minFS_{8,1}$ = **0.41**

Determination of the smallest fail-safe margin of safety for the bolt, and the failure mode

MSbolt_FS := min(MS_FS)

MSbolt_FS = **0.18**	Failure_Mode_FS = **"Joint Separation"**
MS_min_ID = **710008002**	Element Identification (710008) and Bolt Number (2) for Minimum Margin
MS_min_LC = **5031**	Load Case Number for Minimum Margin
MS_min_P = **3529.9**	Applied Tensile Load for Minimum Margin
MS_min_V = **1100.3**	Applied Shear Load for Minimum Margin
MS_min_M = **0**	Applied Bending Moment for Minimum Margin

Bolt Fail-Safe Analysis for Aft Bracket to PAS Platform Removing Bolt 2

Fail-safe analysis is done by removing one bolt at a time and the analysis is repeated 4 times. There are now 3, NAS1956C30 (180 ksi), 0.375-24 UNFJ fasteners, holding the Vertex Bracket to the PAS platform. The drawing number for the Vertex Bracket Installation is SGG39135873.

size thread/in

$$bolt2 := \begin{pmatrix} 0.375 & 24 \\ 0.375 & 24 \\ 0.375 & 24 \end{pmatrix}$$

$s := 1 .. rows(bolt2)$

$N2_s := bolt2_{s,2} \cdot \frac{1}{in}$ pitch of bolt

$D2_s := bolt2_{s,1} \cdot in$ bolt diameter

Tensile Area of bolt

$$At2_s := \beta \cdot \left(\frac{D2_s - 0.9743 \cdot \frac{1}{N2_s}}{2} \right)^2$$

Shear Area of bolt

$$As2_s := \beta \cdot \left(\frac{D2_s - 1.299038 \cdot \frac{1}{N2_s}}{2} \right)^2$$

Bolt Pattern

Bolt no. x coordinate y coordinate z coordinate

$$\begin{pmatrix} 1 \\ 3 \\ 4 \end{pmatrix} \quad x2 := \begin{pmatrix} -2.75 \\ 2.75 \\ 2.75 \end{pmatrix} \cdot in \quad y2 := \begin{pmatrix} 1.25 \\ 1.25 \\ -1.25 \end{pmatrix} \cdot in \quad z2 := \begin{pmatrix} 0 \\ 0 \\ 0 \end{pmatrix} in$$

Note Bolt 2 is removed from the bolt pattern.

Location of applied forces and moments

$xforce2 := \mathbf{0.0}in$ $\quad yforce2 := \mathbf{0.0}in$ $\quad zforce2 := \mathbf{0.0}in$

$$cgload2 := \begin{pmatrix} xforce2 \\ yforce2 \\ zforce2 \end{pmatrix} \qquad cgload2 = \begin{pmatrix} \mathbf{0.00} \\ \mathbf{0.00} \\ \mathbf{0.00} \end{pmatrix} \cdot in$$

Center of gravity of bolt group

$$xcg2 := \frac{\sum_s x2_s}{rows(x2)} \quad xcg2 = \mathbf{0.92} \cdot in \qquad ycg2 := \frac{\sum_s y2_s}{rows(y2)} \quad ycg2 = \mathbf{0.42} \cdot in \qquad zcg2 := \frac{\sum_s z2_s}{rows(z2)} \quad zcg2 = \mathbf{0.00} \cdot in$$

$$cg_{bolt2} := \begin{pmatrix} xcg2 \\ ycg2 \\ zcg2 \end{pmatrix} \qquad cg_{bolt2} = \begin{pmatrix} \mathbf{0.92} \\ \mathbf{0.42} \\ \mathbf{0.00} \end{pmatrix} \cdot in$$

Note Since the z direction is into the plate the loads are shared equally between the bolts. However, due to a failure in bolt 2, the x and y directions in the bolt pattern are unsymmetric and have a offset from the center of gravity.

Load Vector

$$r_{load2} := cgload2 - cg_{bolt2} \qquad r_{load2} = \begin{pmatrix} \mathbf{-0.92} \\ \mathbf{-0.42} \\ \mathbf{0.00} \end{pmatrix} \cdot in$$

Distance from CG of Bolts to Individual Bolts for shear calculations

$$r2_s := \sqrt{(x2_s - xcg2)^2 + (y2_s - ycg2)^2} \qquad r2_s = \begin{pmatrix} \mathbf{3.760} \\ \mathbf{2.014} \\ \mathbf{2.478} \end{pmatrix} \cdot in$$

Reading database file for bolted joint

$ID2 := \mathbf{0}$ $\quad LC2 := \mathbf{0}$ $\quad M2 := \mathbf{0}$

$data := READPRN(\mathbf{"boltsVertPlatform.txt"})$

$q := \mathbf{1} .. rows(data)$ $\quad num_bolts2 := rows(bolt2)$

Loads from 2-06 loads model

Shear in X axis $Fx2_q := -data_{q,3} \cdot lbf$

Moment about X axis $Mx2_q := -data_{q,6} \cdot in \cdot lbf$

Shear in Y axis $Fy2_q := -data_{q,4} \cdot lbf$

Moment about Y axis $My2_q := -data_{q,7} \cdot in \cdot lbf$

Axial Load $Fz2_q := -data_{q,5} \cdot lbf$

Torsion $Mz2_q := -data_{q,8} \cdot in \cdot lbf$

Element Identification $ID2_q := data_{q,1}$

$ID2_q := ID2_q \cdot 1000 + 1$ Counter for number of bolts in pattern

Load Case Number $LC2_q := data_{q,2}$

Applied Bending Moment at Bolts $M2_q := 0 \cdot in \cdot lbf$

Format of Output File

The stack command below is used to stack the element identifications (ID2) and load cases (LC2) in ascending order per bolt. See the array example above for explanation.
Note bolt number 2 is not included.

$ID2 := stack(ID2, ID2 + 2, ID2 + 3)$

$LC2 := stack(LC2, LC2, LC2)$

Moment Distribution

$$M_{tot2}^{\langle q \rangle} := \begin{pmatrix} Mx2_q \\ My2_q \\ Mz2_q \end{pmatrix} + r_{load2} \times \begin{pmatrix} Fx2_q \\ Fy2_q \\ Fz2_q \end{pmatrix}$$

Use the cross-product to determine the additional moments acting on the fasteners.

$Mx_boltcg2_q := M_{tot2_{1,q}}$ $My_boltcg2_q := M_{tot2_{2,q}}$ $Mz_boltcg2_q := M_{tot2_{3,q}}$

Tension on bolts

$$Ftdirect2_{s,q} := \frac{Fz2_q}{num_bolts2}$$

Direct tensile load calculation

$$Fmx2_{s,q} := \begin{cases} 0 \cdot lbf & \text{if } (y2_s - ycg2) = 0 \cdot in \\ \dfrac{[Mx_boltcg2_q \cdot (y2_s - ycg2)] At2_s}{\sum_s \left[(y2_s - ycg2)^2 \cdot At2_s \right]} & \end{cases}$$

$$Fmy2_{s,q} := \begin{cases} 0 \cdot lbf & \text{if } (x2_s - xcg2) = 0 \cdot in \\ \dfrac{-My_boltcg2_q \cdot (x2_s - xcg2) \cdot At2_s}{\sum_s \left[(x2_s - xcg2)^2 \cdot At2_s \right]} & \end{cases}$$

$Ft2_{s,q} := Ftdirect2_{s,q} + Fmx2_{s,q} + Fmy2_{s,q}$ Total Tensile load

Shear on bolts

Secondary shear on bolts $\quad Fs2_{s,q} := \dfrac{Mz_boltcg2_q \cdot r2_s \cdot As2_s}{\sum_s \left[(r2_s)^2 \cdot (As2_s) \right]}$

$u_s := \mathrm{atan2}(x2_s - xcg2, y2_s - ycg2)$

Shear $\quad Sx := 0 \qquad Sy := 0$

$Sy_{s,q} := \sin\left(\dfrac{\beta}{2} - u_s\right) \cdot Fs2_{s,q} \qquad Sx_{s,q} := -\cos\left(\dfrac{\beta}{2} - u_s\right) \cdot Fs2_{s,q}$

Loads of first case

$Sx^{\langle 1 \rangle} = \begin{pmatrix} 15.44 \\ 15.44 \\ -30.87 \end{pmatrix} lbf \qquad Sy^{\langle 1 \rangle} = \begin{pmatrix} 67.92 \\ -33.96 \\ -33.96 \end{pmatrix} lbf \qquad u_s = \begin{pmatrix} 167.2 \\ 24.4 \\ -42.3 \end{pmatrix} \cdot deg$

$Fstot2_{s,q} := \sqrt{\left(Sx_{s,q} + \dfrac{Fx_q}{2}\right)^2 + \left(Sy_{s,q} + \dfrac{Fy_q}{2}\right)^2}$

$\max(Fstot2) = 1734.47\,lbf$

Assume that Fx and Fy are shared by only 2 bolts. $\quad \min(Fstot2) = 10.79\,lbf$

The stack commands below are used to stack applied axial load (P2), applied shear load (V2), and applied moment (M2) in ascending order per bolt. These loads are put into an array with the element/bolt number and load case number from above. See the "Output2" file below.
Note there are only 3 bolts, since bolt number 2 is not included.

$P2 := \mathrm{stack}\left[(Ft2^T)^{\langle 1 \rangle}, (Ft2^T)^{\langle 2 \rangle}, (Ft2^T)^{\langle 3 \rangle} \right]$

$V2 := \mathrm{stack}\left[(Fstot2^T)^{\langle 1 \rangle}, (Fstot2^T)^{\langle 2 \rangle}, (Fstot2^T)^{\langle 3 \rangle} \right]$

$M2 := \mathrm{stack}(M2, M2, M2)$

The "Output2" file below outputs an array from left to right starting with the element identification (ID2), Load case number (LC2), applied load on the bolt (P2), applied shear on the bolt (V2), and applied moment on the bolt (M2). See the output array example above. The array is written to a text file.

$Output2 := \mathrm{augment}\left(ID2, LC2, \dfrac{P2}{lbf}, \dfrac{V2}{lbf}, \dfrac{M2}{in \cdot lbf}\right)$

Note Since the ID2 and LC2 numbers are dimensionless, the P2, V2, and M2 values are divided by their units in order to make the array dimensionless.

Size of the "Output2" Array $\quad \mathrm{rows}(Output2) = 768$

(3 bolts x 256 load cases) x 1 joint = 768 rows

WRITEPRN(**"output_vertpas_r5_onorbit_fs3.txt"**) := Output2

Bolt Fail-safe Results

The array from the text file above is read

data_fs := READPRN("**output_vertpas_r5_onorbit_fs3.txt**") s := **1** .. rows(data_fs)

Fail-safe Loads

Applied tensile load $P_FS_s := data_fs_{s,3} \cdot lbf$ $ID_FS_s := data_fs_{s,1}$

Applied shear load $V_FS_s := data_fs_{s,4} \cdot lbf$ $LC_FS_s := data_fs_{s,2}$

Applied bending moment $M_FS_s := data_fs_{s,5} \cdot in \cdot lbf$

Fail-safe Factors of Safety

Ultimate SFu_FS := **1.0**

Joint Separation SFsep_FS := **1.0**

Prepared By	B. Dyer	5/21/07	Engineering and Science Contract Group *Structural Analysis Section*	File Name Vert_PAS_r5.xmcd
Revised By	Kent Peters	5/22/09		
Checked By	C. Bala			Drawing No. SGG39135873
Title	Bolts from PAS Vertex Bracket to PAS Platform			

This file uses the calculations shown in \\escfil02\2i11_mathcad\8307_bolts\ multi_bolt_stiffness_nut_FS_RevC

Fail-Safe Stiffness File

Bolt Fail-safe Load data

Joint separation load $\max(Psep_FS) = \mathbf{6857.367} \cdot lbf$ $\max(P_FS) = \mathbf{6857.367}\, lbf$

Max bolt load (ultimate) $\max(Pb_FS) = \mathbf{11072.1} \cdot lbf$ $\max(V_FS) = \mathbf{1734.467}\, lbf$

Summary of fail-safe Margins Removing Bolt 2

Joint separation	$MS_minFS_{1,1} = -\mathbf{0.39}$	Total Thread shear Ult	$MS_minFS_{5,1} = \mathbf{0.61}$
Direct Tension Ultimate	$MS_minFS_{2,1} = \mathbf{0.88}$	Shear Ultimate	$MS_minFS_{6,1} = \mathbf{4.74}$
Total Tension Ultimate	$MS_minFS_{3,1} = \mathbf{0.34}$	Bending Ultimate	$MS_minFS_{7,1} = \mathbf{10.00}$
Direct Thread shear Ultimate	$MS_minFS_{4,1} = \mathbf{1.26}$	Combined shear, tension and bending ultimate	$MS_minFS_{8,1} = \mathbf{0.34}$

Determination of the smallest fail-safe margin of safety for the bolt, and the failure mode

$MSbolt_FS := \min(MS_FS)$

$MSbolt_FS = -\mathbf{0.39}$ Failure_Mode_FS = **"Joint Separation"**

(Note: A negative margin of safety for joint separation is acceptable for fail-safe.)

$MS_min_ID = \mathbf{710008004}$	Element Identification (710008) and Bolt Number (4) for Minimum Margin
$MS_min_LC = \mathbf{5023}$	Load Case Number for Minimum Margin
$MS_min_P = \mathbf{6857.4}$	Applied Tensile Load for Minimum Margin
$MS_min_V = \mathbf{1082.5}$	Applied Shear Load for Minimum Margin
$MS_min_M = \mathbf{0}$	Applied Bending Moment for Minimum Margin

Bolt Fail-Safe Analysis for Aft Bracket to PAS Platform Removing Bolt 1

Fail-safe analysis is done by removing one bolt at a time and the analysis is repeated 4 times. There are now 3, NAS1956C30 (180 ksi), 0.375-24 UNFJ fasteners, holding the Vertex Bracket to the PAS platform. The drawing number for the Vertex Bracket Installation is SGG39135873.

size thread/in

$$bolt2 := \begin{pmatrix} 0.375 & 24 \\ 0.375 & 24 \\ 0.375 & 24 \end{pmatrix}$$

$s := 1 .. rows(bolt2)$

$N2_s := bolt2_{s,2} \cdot \frac{1}{in}$ pitch of bolt

$D2_s := bolt2_{s,1} \cdot in$ bolt diameter

Tensile Area of bolt

$$At2_s := \beta \cdot \left(\frac{D2_s - 0.9743 \cdot \frac{1}{N2_s}}{2} \right)^2$$

Shear Area of bolt

$$As2_s := \beta \cdot \left(\frac{D2_s - 1.299038 \cdot \frac{1}{N2_s}}{2} \right)^2$$

Bolt Pattern

Bolt no. x coordinate y coordinate z coordinate

$$\begin{pmatrix} 2 \\ 3 \\ 4 \end{pmatrix} \quad x2 := \begin{pmatrix} -2.75 \\ 2.75 \\ 2.75 \end{pmatrix} \cdot in \quad y2 := \begin{pmatrix} -1.25 \\ 1.25 \\ -1.25 \end{pmatrix} \cdot in \quad z2 := \begin{pmatrix} 0 \\ 0 \\ 0 \end{pmatrix} in$$

Note Bolt 1 is removed from the bolt pattern.

Location of applied forces and moments

$xforce2 := \mathbf{0.0}in$ $\quad yforce2 := \mathbf{0.0}in$ $\quad zforce2 := \mathbf{0.0}in$

$$cgload2 := \begin{pmatrix} xforce2 \\ yforce2 \\ zforce2 \end{pmatrix} \qquad cgload2 = \begin{pmatrix} \mathbf{0.00} \\ \mathbf{0.00} \\ \mathbf{0.00} \end{pmatrix} \cdot in$$

Center of gravity of bolt group

$$xcg2 := \frac{\sum_s x2_s}{rows(x2)} \quad xcg2 = \mathbf{0.92} \cdot in \qquad ycg2 := \frac{\sum_s y2_s}{rows(y2)} \quad ycg2 = -\mathbf{0.42} \cdot in \qquad zcg2 := \frac{\sum_s z2_s}{rows(z2)} \quad zcg2 = \mathbf{0.00} \cdot in$$

$$cg_{bolt2} := \begin{pmatrix} xcg2 \\ ycg2 \\ zcg2 \end{pmatrix} \qquad cg_{bolt2} = \begin{pmatrix} \mathbf{0.92} \\ -\mathbf{0.42} \\ \mathbf{0.00} \end{pmatrix} \cdot in$$

Note Since the z direction is into the plate the loads are shared equally between the bolts. However, due to a failure in bolt 1, the x and y directions in the bolt pattern are unsymmetric and have a offset from the center of gravity.

Load Vector

$$r_{load2} := cgload2 - cg_{bolt2} \qquad r_{load2} = \begin{pmatrix} -\mathbf{0.92} \\ \mathbf{0.42} \\ \mathbf{0.00} \end{pmatrix} \cdot in$$

Distance from CG of Bolts to Individual Bolts for shear calculations

$$r2_s := \sqrt{(x2_s - xcg2)^2 + (y2_s - ycg2)^2} \qquad r2_s = \begin{pmatrix} \mathbf{3.760} \\ \mathbf{2.478} \\ \mathbf{2.014} \end{pmatrix} \cdot in$$

Reading database file for bolted joint

$ID2 := \mathbf{0}$ $\quad LC2 := \mathbf{0}$ $\quad M2 := \mathbf{0}$

$data := READPRN(\text{"boltsVertPlatform.txt"})$

$q := \mathbf{1} .. rows(data)$

$num_bolts2 := rows(bolt2)$

Loads from 2-06 loads model

Shear in X axis $Fx2_q := -data_{q,3} \cdot lbf$

Moment about X axis $Mx2_q := -data_{q,6} \cdot in \cdot lbf$

Shear in Y axis $Fy2_q := -data_{q,4} \cdot lbf$

Moment about Y axis $My2_q := -data_{q,7} \cdot in \cdot lbf$

Axial Load $Fz2_q := -data_{q,5} \cdot lbf$

Torsion $Mz2_q := -data_{q,8} \cdot in \cdot lbf$

Element Identification $ID2_q := data_{q,1}$

$ID2_q := ID2_q \cdot 1000 + 1$ Counter for number of bolts in pattern

Load Case Number $LC2_q := data_{q,2}$

Applied Bending Moment at Bolts $M2_q := 0 \cdot in \cdot lbf$

Format of Output File

The stack command below is used to stack the element identifications (ID2) and load cases (LC2) in ascending order per bolt. See the array example above for explanation.
Note bolt number 1 is not included.

$ID2 := stack(ID2 + 1, ID2 + 2, ID2 + 3)$

$LC2 := stack(LC2, LC2, LC2)$

Moment Distribution

$$M_{tot2}^{\langle q \rangle} := \begin{pmatrix} Mx2_q \\ My2_q \\ Mz2_q \end{pmatrix} + r_{load2} \times \begin{pmatrix} Fx2_q \\ Fy2_q \\ Fz2_q \end{pmatrix}$$

Use the cross-product to determine the additional moments acting on the fasteners.

$Mx_boltcg2_q := M_{tot2_{1,q}}$ $My_boltcg2_q := M_{tot2_{2,q}}$ $Mz_boltcg2_q := M_{tot2_{3,q}}$

Tension on bolts

$$Ftdirect2_{s,q} := \frac{Fz2_q}{num_bolts2}$$

Direct tensile load calculation

$$Fmx2_{s,q} := \begin{cases} 0 \cdot lbf & \text{if } (y2_s - ycg2) = 0 \cdot in \\ \dfrac{[Mx_boltcg2_q \cdot (y2_s - ycg2)] At2_s}{\sum_s \left[(y2_s - ycg2)^2 \cdot At2_s \right]} & \end{cases}$$

$$Fmy2_{s,q} := \begin{cases} 0 \cdot lbf & \text{if } (x2_s - xcg2) = 0 \cdot in \\ \dfrac{-My_boltcg2_q \cdot (x2_s - xcg2) \cdot At2_s}{\sum_s \left[(x2_s - xcg2)^2 \cdot At2_s \right]} & \end{cases}$$

$Ft2_{s,q} := Ftdirect2_{s,q} + Fmx2_{s,q} + Fmy2_{s,q}$

Total Tensile load

Shear on bolts

Secondary shear on bolts $\quad Fs2_{s,q} := \dfrac{Mz_boltcg2_q \cdot r2_s \cdot As2_s}{\sum_s \left[(r2_s)^2 \cdot (As2_s) \right]}$

$u_s := \mathrm{atan2}(x2_s - xcg2, y2_s - ycg2)$

Shear $\quad Sx := 0 \qquad Sy := 0$

$Sy_{s,q} := \sin\left(\dfrac{\beta}{2} - u_s\right) \cdot Fs2_{s,q} \qquad Sx_{s,q} := -\cos\left(\dfrac{\beta}{2} - u_s\right) \cdot Fs2_{s,q}$

Loads of first case

$$Sx^{\langle 1 \rangle} = \begin{pmatrix} -9.19 \\ 18.37 \\ -9.19 \end{pmatrix} \mathrm{lbf} \qquad Sy^{\langle 1 \rangle} = \begin{pmatrix} 40.42 \\ -20.21 \\ -20.21 \end{pmatrix} \mathrm{lbf} \qquad u_s = \begin{pmatrix} -167.2 \\ 42.3 \\ -24.4 \end{pmatrix} \cdot \mathrm{deg}$$

$$Fstot2_{s,q} := \sqrt{\left(Sx_{s,q} + \frac{Fx_q}{2}\right)^2 + \left(Sy_{s,q} + \frac{Fy_q}{2}\right)^2}$$

$\min(Fstot2) = 11.66\,\mathrm{lbf}$

$\max(Fstot2) = 1766.25\,\mathrm{lbf}$

Assume that Fx and Fy are shared by only 2 bolts.

The stack commands below are used to stack applied axial load (P2), applied shear load (V2), and applied moment (M2) in ascending order per bolt. These loads are put into an array with the element/bolt number and load case number from above. See the "Output2" file below.
Note there are only 3 bolts, since bolt number 1 is not included.

$P2 := \mathrm{stack}\left[(Ft2^T)^{\langle 1 \rangle}, (Ft2^T)^{\langle 2 \rangle}, (Ft2^T)^{\langle 3 \rangle} \right]$

$V2 := \mathrm{stack}\left[(Fstot2^T)^{\langle 1 \rangle}, (Fstot2^T)^{\langle 2 \rangle}, (Fstot2^T)^{\langle 3 \rangle} \right]$

$M2 := \mathrm{stack}(M2, M2, M2)$

The "Output2" file below outputs an array from left to right starting with the element identification (ID2), Load case number (LC2), applied load on the bolt (P2), applied shear on the bolt (V2), and applied moment on the bolt (M2). See the output array example above. The array is written to a text file.

$Output2 := \mathrm{augment}\left(ID2, LC2, \dfrac{P2}{\mathrm{lbf}}, \dfrac{V2}{\mathrm{lbf}}, \dfrac{M2}{\mathrm{in \cdot lbf}}\right)$

Note Since the ID2 and LC2 numbers are dimensionless, the P2, V2, and M2 values are divided by their units in order to make the array dimensionless.

Size of the "Output2" Array $\quad \mathrm{rows}(Output2) = 768$

(3 bolts x 256 load cases) x 1 joint = 768 rows

WRITEPRN(**"output_vertpas_r5_onorbit_fs4.txt"**) := Output2

Bolt Fail-safe Results

The array from the text file above is read

data_fs := READPRN("**output_vertpas_r5_onorbit_fs4.txt**") s := **1** .. rows(data_fs)

Fail-safe Loads

Applied tensile load $P_FS_s := data_fs_{s,3} \cdot lbf$ $ID_FS_s := data_fs_{s,1}$

Applied shear load $V_FS_s := data_fs_{s,4} \cdot lbf$ $LC_FS_s := data_fs_{s,2}$

Applied bending moment $M_FS_s := data_fs_{s,5} \cdot in \cdot lbf$

Fail-safe Factors of Safety

Ultimate SFu_FS := **1.0**

Joint Separation SFsep_FS := **1.0**

This file uses the calculations shown in \\escfil02\2i11_mathcad\8307_bolts\multi_bolt_stiffness_nut_FS_RevC

Fail-Safe Stiffness File

Bolt Fail-safe Load data

Joint separation load	max(Psep_FS) = **3508.267** lbf	max(P_FS) = **3508.267** lbf
Max bolt load (ultimate)	max(Pb_FS) = **10513.9** lbf	max(V_FS) = **1766.25** lbf

Summary of fail-safe Margins Removing Bolt 1

Joint separation	$MS_minFS_{1,1}$ = **0.19**	Total Thread shear Ult	$MS_minFS_{5,1}$ = **0.69**
Direct Tension Ultimate	$MS_minFS_{2,1}$ = **2.68**	Shear Ultimate	$MS_minFS_{6,1}$ = **4.64**
Total Tension Ultimate	$MS_minFS_{3,1}$ = **0.41**	Bending Ultimate	$MS_minFS_{7,1}$ = **10.00**
Direct Thread shear Ultimate	$MS_minFS_{4,1}$ = **3.42**	Combined shear, tension and bending ultimate	$MS_minFS_{8,1}$ = **0.41**

Determination of the smallest fail-safe margin of safety for the bolt, and the failure mode

MSbolt_FS := min(MS_FS)

MSbolt_FS = **0.19**	Failure_Mode_FS = **"Joint Separation"**
MS_min_ID = **710008004**	Element Identification (710008) and Bolt Number (4) for Minimum Margin
MS_min_LC = **5023**	Load Case Number for Minimum Margin
MS_min_P = **3508.3**	Applied Tensile Load for Minimum Margin
MS_min_V = **1098.9**	Applied Shear Load for Minimum Margin
MS_min_M = **0**	Applied Bending Moment for Minimum Margin

4.12.6.2 Vertex Bracket to PAS Platform Shear Bolt Analysis

Section 4.12.6.2 PAS Vertex Bracket to PAS Platform - Shear Bolt

CHECK Shear Bolt (NAS1160-6-30, .375-24 x 2.482L, CRES A286, 160 KSI), Washer (NAS1587-6C, C-Sink, .375 x .078 THK, CRES), Nut (NAS1805-6, .375-24, CRES A286, 180 KSI)

data := READPRN("**output_vertpas_r5_onorbit.txt**")

s := **1** .. rows(data)

Flange 1: Vertex Bracket
Part number:SDG39135813
Material: 7050-T7451, 16.50x10.72x7.92, BMS-7-323C

Flange 2: PAS Platform
Part number: SDG39135817
Material: 7050-T7451, 44.82x45.40x2.75, BMS-7-323C

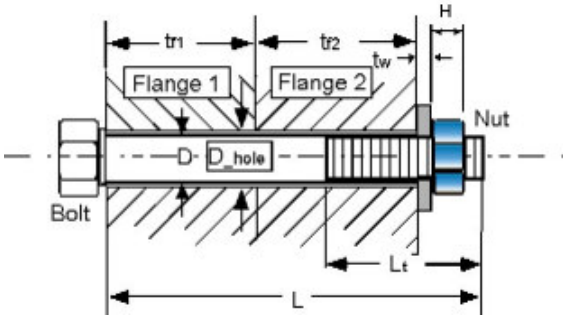

Loads

ele1 := **710008001** ele2 := **1**

Applied tensile load

```
P := | for s3 ∈ s
     |   if data[s3,1] = ele1 ∨ data[s3,1] = ele2
     |     | s2 ← s2 + 1
     |     | P2[s2] ← data[s3,3]·lbf
     | P2
```

Applied bending moment

```
M := | for s3 ∈ s
     |   if data[s3,1] = ele1 ∨ data[s3,1] = ele2
     |     | s2 ← s2 + 1
     |     | P2[s2] ← data[s3,5]·in·lbf
     | P2
```

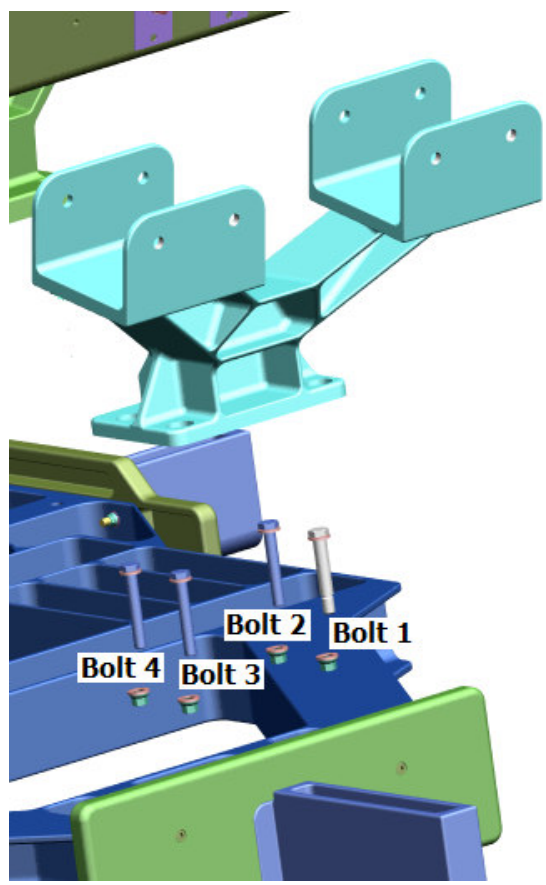

Applied shear load

$$V := \left| \begin{array}{l} \text{for } s3 \in s \\ \quad \text{if } data_{s3,1} = ele1 \vee data_{s3,1} = ele2 \\ \quad\quad \left| \begin{array}{l} s2 \leftarrow s2 + 1 \\ P2_{s2} \leftarrow data_{s3,4} \cdot lbf \end{array} \right. \\ P2 \end{array} \right.$$

$$ID := \left| \begin{array}{l} \text{for } s3 \in s \\ \quad \text{if } data_{s3,1} = ele1 \vee data_{s3,1} = ele2 \\ \quad\quad \left| \begin{array}{l} s2 \leftarrow s2 + 1 \\ P2_{s2} \leftarrow data_{s3,1} \end{array} \right. \\ P2 \end{array} \right.$$

$$LC := \left| \begin{array}{l} \text{for } s3 \in s \\ \quad \text{if } data_{s3,1} = ele1 \vee data_{s3,1} = ele2 \\ \quad\quad \left| \begin{array}{l} s2 \leftarrow s2 + 1 \\ P2_{s2} \leftarrow data_{s3,2} \end{array} \right. \\ P2 \end{array} \right.$$

$s := 1 .. rows(ID)$

$rows(ID) = 256.00$ $\qquad \dfrac{384}{64 \cdot 3} = 2.00$

Temperature data

Assembly $\quad Temp_initial := 70 \cdot deg$

Maximum $\quad Temp_max := 151 \cdot deg$

Minimum $\quad Temp_min := -43 \cdot deg$

Factors of Safety

Ultimate	$SFu := 2.0$	Yield	$SFy := 1.25$
Joint Separation	$SFsep := 1.2$	Fitting factor	$FF := 1.15$

Bolt and Nut Data

Nominal diameter of bolt $D := .375 \cdot in$

Reduced dia of shear bolt $Dnew := 0.306 \cdot in$

Shear Bolt Shank Diameter $Dshank := 0.425 \cdot in$

Number of threads/inch $Nt := 24 \cdot \frac{1}{in}$

GRIP Length of Bolt $GRIP := (30) \cdot (0.0625 \cdot in)$

Total length of bolt $L := GRIP + 0.607 \cdot in$

Threaded length $Lt := 2.482 \cdot in - 1.885 \cdot in - .083 \cdot in$

Height of nut $H := 0.375 \cdot in$

Bolt head dia. across flats $dw := 0.554 \cdot in$ (used only if there is no washer)

This file uses the calculations shown in \\escfil02\2i11_mathcad\8307_bolts\thread_data.mcd

Washer Data

Thickness of washers (2X) $tw := 0.156 \cdot in$

Outer Diameter of washer $Dw := 0.687 in$

Inner Diameter of washer $Dwi := 0.378 \cdot in$

Note: If there is no washer tw, Dw and Dwi should be zero

Flange data

Thickness of flange 1 $tf1 := .500 \cdot in - .175 \cdot in = 0.325 in$ (Height minus depth of recess)

Thickness of flange 2 $tf2 := 2.75 \cdot in - 1.25 \cdot in = 1.50 in$

Diameter of hole $D_hole := 0.428 \cdot in$

Material Property Data

Bolt

Temperature correction factor for bolt strength ultimate $TSu_bolt := 0.96$

Yield $TSy_bolt := 0.96$

Bolt ultimate tensile allowable stress $Ftu_bolt := 160000 \cdot psi$

Bolt ultimate shear allowable stress $Fsu_bolt := 0.6 \cdot Ftu_bolt$

Bolt yield Tensile allowable stress $Fty_bolt := 120000 \cdot psi$

Temperature correction factor for bolt modulus $TE_bolt := 0.96$

$\beta_bolt_hot := 9.1 \cdot 10^{-6} \cdot \frac{\frac{in}{in}}{deg}$

Modulus of elasticity of bolt $E_bolt := (29.1 \cdot 10^{6} \cdot psi)$

Thermal coeffecient for bolt $\beta_bolt_cold := 8.7 \cdot 10^{-6} \cdot \frac{\frac{in}{in}}{deg}$

Nut

Temperature correction factor for nut strength $TS_nut := \mathbf{0.96}$

Ultimate tensile allowable stress $Ftu_nut := \mathbf{180000} \cdot psi$

Ultimate Shear allowable stress: $Fsu_nut := \mathbf{0.6} \cdot Ftu_nut$

Ultimate axial strength of nut $Ptu_nut := \mathbf{16488} \cdot lbf$

(180/125=1.44, 11450*1.44=16488, Ref.NAS1291)

Washer

Temperature correction factor for washer modulus $TE_washer := \mathbf{.96}$

Modulus of elasticity of washer: $E_washer := \left(\mathbf{29.1} \cdot \mathbf{10}^{\mathbf{6}} \cdot psi\right)$

Flanges

Stiffness of the joint depends upon number of members in the grip of the fasteners, Modulus of elasticity of these members, and diameters of the bolt and the washer.

Temperature correction factor for flange 1 $Tf1E := \mathbf{.98}$ (modulus)

Temperature correction factor for flange 2 $Tf2E := \mathbf{.98}$

Modulus of elasticity for the parts in the joint $E_flange1 := \left(\mathbf{10.3} \cdot \mathbf{10}^{\mathbf{6}} \cdot psi\right)$ $E_flange2 := \left(\mathbf{10.3} \cdot \mathbf{10}^{\mathbf{6}} \cdot psi\right)$

Coefficient of thermal expansion for flanges

$\beta_flange1_hot := \mathbf{12.8} \cdot \mathbf{10}^{-\mathbf{6}} \cdot \frac{\frac{in}{in}}{deg}$ $\beta_flange2_hot := \mathbf{12.8} \cdot \mathbf{10}^{-\mathbf{6}} \cdot \frac{\frac{in}{in}}{deg}$

$\beta_flange1_cold := \mathbf{12.1} \cdot \mathbf{10}^{-\mathbf{6}} \cdot \frac{\frac{in}{in}}{deg}$ $\beta_flange2_cold := \mathbf{12.1} \cdot \mathbf{10}^{-\mathbf{6}} \cdot \frac{\frac{in}{in}}{deg}$

Torque/Preload data

Maximum torque $Tmax := \mathbf{339} \cdot in \cdot lbf$ ***59.0% of Yield***

Minimum torque $Tmin := \mathbf{288} \cdot in \cdot lbf$ ***85% of Max Torque***

Torque coefficient $k := \mathbf{0.15}$

Loading plane factor $n := \mathbf{0.5}$

Preload Uncertainty $u := \mathbf{0.25}$

Prepared By	B. Dyer	5/21/07	Engineering and Science Contract Group *Structural Analysis Section*	File Name Vert_PAS_Shear.xmcd
Revised By	Kent Peters	5/12/09		
Checked By	C. Bala			Drawing No. SGG39135873
Title	Shear Bolt from Vertex Bracket to PAS Platform			

Bolt Load data

Bolt/joint stiffness factor	= **0.346**	Preload due to temperature	Pthr_pos = **712.1**·lbf
Max. preload	PLDmax = **8245.5**·lbf		Pthr_neg = –**912.9**·lbf
Min. preload	PLDmin = **2550.4**·lbf	Uncertainty factor	u = **0.25**
Joint separation load	max(Psep) = **719.935**·lbf	Torque coefficient	k = **0.15**
Max. load on the bolt (ultimate)	max(Pb) = **8484.5**·lbf	Loading plane factor	n = **0.50**
Max. load on the bolt (yield)	max(Pby) = **8394.8**·lbf	Thread pullout strength required to develop full strength of bolt	PAs = **15838.4**·lbf
Bolt ultimate tensile strength	PAt = **13198.6**·lbf	Nut ultimate tensile strength	Ptu_nut = **15828.5**·lbf

Summary of Margins for bolt:

Length_check = **"Bolt length is sufficient"**

Joint separation	$MS_min_{1,1}$ = **2.73**	Direct Thread shear Ultimate	$MS_min_{6,1}$ = **10.48**
Direct Tension Ultimate	$MS_min_{2,1}$ = **7.19**	Total Thread shear Ultimate	$MS_min_{7,1}$ = **0.87**
Direct Tension Yield	$MS_min_{3,1}$ = **8.82**	Shear Ultimate	$MS_min_{8,1}$ = **2.30**
Total Tension Ultimate	$MS_min_{4,1}$ = **0.33**	Bending Ultimate	$MS_min_{9,1}$ = **1000**
Total Tension Yield	$MS_min_{5,1}$ = **0.01**	Combined shear, tension and bending ultimate	$MS_min_{10,1}$ = **0.33**

Determination of the smallest margin of safety for the bolt, and the failure mode:

MSbolt := min(MS)

MSbolt = **0.01**	Failure_Mode = **"Total Tension Yield"**
MS_min_ID = **710008001**	Element Identification (710008) and Bolt Number (1) for Minimum Margin
MS_min_LC = **1007**	Load Case Number for Minimum Margin
MS_min_P = **599.9**	Applied Tensile Load for Minimum Margin
MS_min_V = **360.7**	Applied Shear Load for Minimum Margin
MS_min_M = **0**	Applied Bending Moment for Minimum Margin

Fail-safe Analysis

Fail-safe Loads

data_fs1 := READPRN("**output_vertpas_r5_onorbit_fs1.txt**")

data_fs2 := READPRN("**output_vertpas_r5_onorbit_fs2.txt**")

data_fs3 := READPRN("**output_vertpas_r5_onorbit_fs3.txt**")

data_fs4 := READPRN("**output_vertpas_r5_onorbit_fs4.txt**")

data_fs := stack(data_fs1, data_fs2, data_fs3, data_fs4) rows(data_fs) = **3072.00**

s := **1** .. rows(data_fs) rows(data_fs1) = **768.00**

Fail-safe Factors of Safety

Ultimate SFu_FS := **1.0**

Joint Separation SFsep_FS := **1.0**

```
P_FS := | for s3 ∈ s
        |   if data_fs[s3,1] = ele1 ∨ data_fs[s3,1] = ele2
        |     | s2 ← s2 + 1
        |     | P2[s2] ← data_fs[s3,3]·lbf
        | P2
```

```
ID_FS := | for s3 ∈ s
         |   if data_fs[s3,1] = ele1 ∨ data_fs[s3,1] = ele2
         |     | s2 ← s2 + 1
         |     | P2[s2] ← data_fs[s3,1]
         | P2
```

```
M_FS := | for s3 ∈ s
        |   if data_fs[s3,1] = ele1 ∨ data_fs[s3,1] = ele2
        |     | s2 ← s2 + 1
        |     | P2[s2] ← data_fs[s3,5]·in·lbf
        | P2
```

```
LC_FS := | for s3 ∈ s
         |   if data_fs[s3,1] = ele1 ∨ data_fs[s3,1] = ele2
         |     | s2 ← s2 + 1
         |     | P2[s2] ← data_fs[s3,2]
         | P2
```

```
V_FS := | for s3 ∈ s
        |   if data_fs[s3,1] = ele1 ∨ data_fs[s3,1] = ele2
        |     | s2 ← s2 + 1
        |     | P2[s2] ← data_fs[s3,4]·lbf
        | P2
```

$s := 1 .. rows(ID_FS)$

$rows(ID_FS) = 768.00$ $\qquad \frac{384}{64 \cdot 3} = 2.00$

This file uses the calculations shown in \\escfil02\2i11_mathcad\8307_bolts\ multi_bolt_stiffness_nut_FS_RevC

Bolt Fail-safe Load data

Joint separation load $\qquad max(Psep_FS) = 1253.012 \cdot lbf$

Max. load on the bolt(ultimate) $\qquad max(Pb_FS) = 8495 \cdot lbf$

Summary of fail-safe Margins for bolt

Joint separation	$MS_minFS_{1,1} = 1.14$	Total Thread shear Ultimate	$MS_minFS_{5,1} = 0.86$
Direct Tension Ultimate	$MS_minFS_{2,1} = 8.16$	Shear Ultimate	$MS_minFS_{6,1} = 4.10$
Total Tension Ultimate	$MS_minFS_{3,1} = 0.55$	Bending Ultimate	$MS_minFS_{7,1} = 10.00$
Direct Thread shear Ultimate	$MS_minFS_{4,1} = 9.99$	Combined shear, tension and bending ultimate	$MS_minFS_{8,1} = 0.55$

Determination of the smallest fail-safe margin of safety for the bolt, and the failure mode

$MSbolt_FS := min(MS_FS)$

$MSbolt_FS = 0.55$ $\qquad$ Failure_Mode_FS = **"Combined Shear Tension Bending Ultimate"**

$MS_min_ID = 710008001$ $\qquad$ Element Identification (710008) and Bolt Number (1) for Minimum Margin

$MS_min_LC = 1007$ $\qquad$ Load Case Number for Minimum Margin

$MS_min_P = 1253$ $\qquad$ Applied Tensile Load for Minimum Margin

$MS_min_V = 322.1$ $\qquad$ Applied Shear Load for Minimum Margin

$MS_min_M = 0$ $\qquad$ Applied Bending Moment for Minimum Margin

4.12.7 Aft Brackets to PAS Platform Bolted Interface

Section 4.12.7 Aft Bracket to PAS Platform Bolted Interface

The Aft Bracket to PAS Platform Bolt Analysis is performed in the following report sections.

4.12.7.1	Aft Brackets to PAS Platform
4.12.7.1	Aft Brackets to PAS Platform Fail Safe
4.12.7.2	Aft Brackets to PAS Platform Shear Bolt Analysis
4.12.7.2	Aft Brackets to PAS Platform Shear Bolt Analysis - Fail Safe

4.12.7.1 Aft Brackets to PAS Platform

Section 4.12.7.1 PAS Aft Bracket to PAS Platform Bolt Analysis

There are a total of 4 fasteners attaching one end of the aft brackets to the PAS platform. Three fasteners are EWB 0420 (200 KSI), 0.375-24 UNFJ and 1 fastener is NAS1160-6 (shear bolt). The drawing number for the Aft Brackets Installation is SGG39135873.

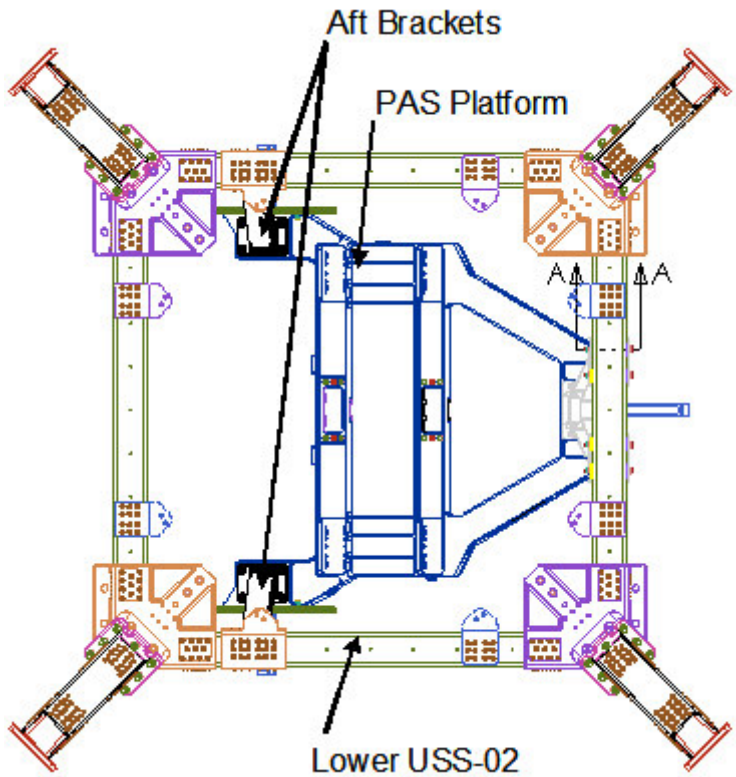

Bolt Geometry

size thread/in

$$bolt := \begin{pmatrix} 0.375 & 24 \\ 0.375 & 24 \\ 0.375 & 24 \\ 0.375 & 24 \end{pmatrix}$$

$i := 1 .. rows(bolt)$

$N_i := bolt_{i,2} \cdot \frac{1}{in}$ pitch of bolt

$D_i := bolt_{i,1} \cdot in$ bolt diameter

Tensile Area of bolt

$$At_i := \beta \cdot \left(\frac{D_i - 0.9743 \cdot \frac{1}{N_i}}{2} \right)^2$$

Shear Area of bolt

$$As_i := \beta \cdot \left(\frac{D_i - 1.299038 \cdot \frac{1}{N_i}}{2} \right)^2$$

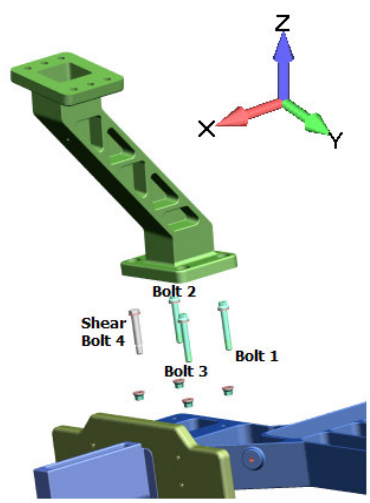

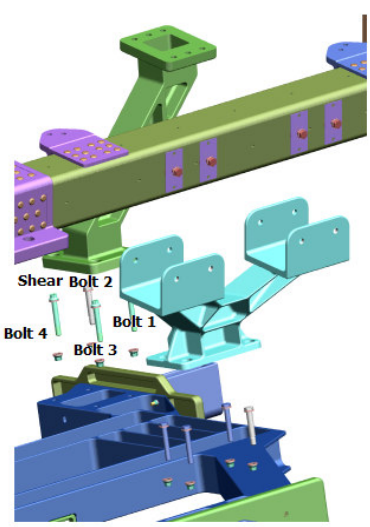

Prepared By	B. Dyer	5/21/07	Engineering and Science Contract Group *Structural Analysis Section*	File Name Aft_PAS_r5.xmcd
Revised By	Kent Peters	5/6/09		
Checked By	C. Bala			Drawing No. SGG39135873
Title	**Bolts from PAS Aft Bracket to PAS Platform**			

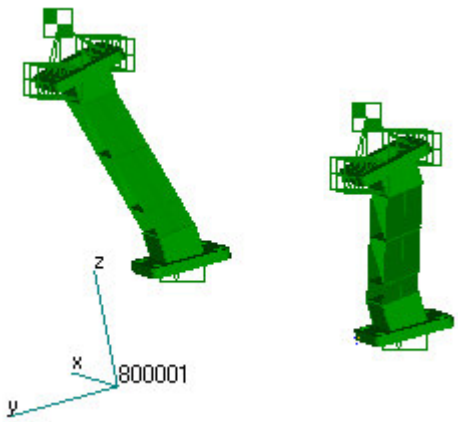

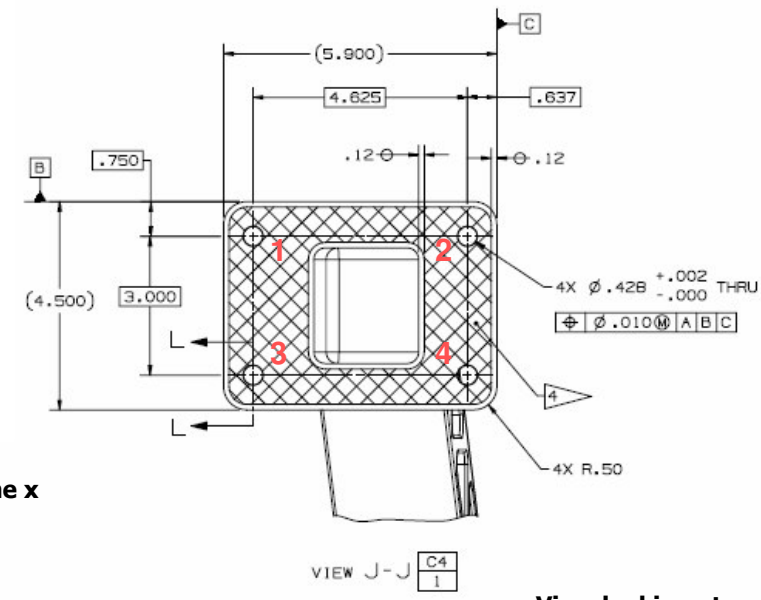

Note For local coordinate system 800001, the z axis direction is tension and the x and y axes are the shear directions.

View looking at the bottom side of the flange

Bolt Pattern

Bolt no.	x coordinates	y coordinates	z coordinates
$\begin{pmatrix}1\\2\\3\\4\end{pmatrix}$	$x := \begin{pmatrix}-1.5\\-1.5\\1.5\\1.5\end{pmatrix}\cdot in$	$y := \begin{pmatrix}2.3125\\-2.3125\\2.3125\\-2.3125\end{pmatrix}\cdot in$	$z := \begin{pmatrix}0\\0\\0\\0\end{pmatrix} in$

Location of applied forces and moments

$xforce := \mathbf{0.0}in$ $\quad yforce := \mathbf{0.0}in$ $\quad zforce := \mathbf{0.0}in$

$$cgload := \begin{pmatrix}xforce\\yforce\\zforce\end{pmatrix} \qquad cgload = \begin{pmatrix}\mathbf{0.00}\\\mathbf{0.00}\\\mathbf{0.00}\end{pmatrix}\cdot in$$

Center of gravity of bolt group

$$xcg := \frac{\sum_i x_i}{rows(x)} \quad xcg = \mathbf{0.00}\cdot in \qquad ycg := \frac{\sum_i y_i}{rows(y)} \quad ycg = \mathbf{0.00}\cdot in \qquad zcg := \frac{\sum_i z_i}{rows(z)} \quad zcg = \mathbf{0.00}\cdot in$$

$$cg_{bolt} := \begin{pmatrix}xcg\\ycg\\zcg\end{pmatrix} \qquad cg_{bolt} = \begin{pmatrix}\mathbf{0.00}\\\mathbf{0.00}\\\mathbf{0.00}\end{pmatrix}\cdot in$$

Note Since the z direction is into the plate the loads are shared equally between the bolts. The x and y axis have a zero offset from the center of gravity.

Load Vector

$r_{load} := cgload - cg_{bolt}$ $\qquad r_{load} = \begin{pmatrix} 0.00 \\ 0.00 \\ 0.00 \end{pmatrix} \cdot in$

Distance from CG of Bolts to Individual Bolts for shear calculations

$r_i := \sqrt{(x_i - xcg)^2 + (y_i - ycg)^2}$ $\qquad r = \begin{pmatrix} 2.756 \\ 2.756 \\ 2.756 \\ 2.756 \end{pmatrix} \cdot in$

Loads model 2-06 was used to retrieve loads at the bolted interface. MPCs located at the center of the aft brackets were post processed in NASPOST for forces and moments in the x, y, and z directions. The MPCs are located on RBE elements 710009 and 710010. These loads are read into an array and distributed out to the 4 bolts for each Aft Bracket.

Note This joint was checked for minimum margins of safety for on-orbit, liftoff, abort landing, and berthing load cases.

Reading database file for bolted joint

See Appendix A22 for NASPOST data.

data := READPRN("**boltsAftPlatform.txt**")

$j := 1 .. rows(data)$

$num_bolts := rows(bolt)$

Note that "boltsAftPlatform.txt" is generated from NASPOST result (.LIS file) by just removing all words and comments. This file is archived along with the other analysis files, see Appendix A22.

Element Identification $\qquad ID_j := data_{j,1}$ $\qquad ID_j := ID_j \cdot 1000 + 1$ Counter for number of bolts in pattern

Load Case Number $\qquad LC_j := data_{j,2}$

Applied Bending Moment at Bolts $\qquad M_j := 0 \cdot in \cdot lbf$

Shear in X axis $\qquad Fx_j := -data_{j,3} \cdot lbf$ $\qquad$ Moment about X axis $\qquad Mx_j := -data_{j,6} \cdot in \cdot lbf$

Shear in Y axis $\qquad Fy_j := -data_{j,4} \cdot lbf$ $\qquad$ Moment about Y axis $\qquad My_j := -data_{j,7} \cdot in \cdot lbf$

Axial Load $\qquad Fz_j := -data_{j,5} \cdot lbf$ $\qquad$ Torsion $\qquad Mz_j := -data_{j,8} \cdot in \cdot lbf$

Format of Output File

The stack commands below are used to stack the element identifications (ID) and load cases (LC) in ascending order per bolt. The element ID number is located in the first column and the LC numbers in the second column.

$ID := stack(ID, ID + \mathbf{1}, ID + \mathbf{2}, ID + \mathbf{3})$

$LC := stack(LC, LC, LC, LC)$

Moment Distribution

$$M_{tot}^{\langle j \rangle} := \begin{pmatrix} Mx_j \\ My_j \\ Mz_j \end{pmatrix} + r_{load} \times \begin{pmatrix} Fx_j \\ Fy_j \\ Fz_j \end{pmatrix}$$

Use the cross-product to determine the additional moments acting on the fasteners.

$Mx_boltcg_j := M_{tot_{\mathbf{1},j}}$ $\quad$ $My_boltcg_j := M_{tot_{\mathbf{2},j}}$ $\quad$ $Mz_boltcg_j := M_{tot_{\mathbf{3},j}}$

Tension on bolts

$$Ftdirect_{i,j} := \frac{Fz_j}{num_bolts}$$

Direct tensile load calculation

$$Fmx_{i,j} := \begin{cases} \mathbf{0} \cdot lbf & \text{if } (y_i - ycg) = \mathbf{0} \cdot in \\ \dfrac{\left[Mx_boltcg_j \cdot (y_i - ycg)\right] At_i}{\sum_i \left[(y_i - ycg)^{\mathbf{2}} \cdot At_i\right]} \end{cases}$$

Tensile due to the moment about X

$$Fmy_{i,j} := \begin{cases} \mathbf{0} \cdot lbf & \text{if } (x_i - xcg) = \mathbf{0} \cdot in \\ \dfrac{-My_boltcg_j \cdot (x_i - xcg) \cdot At_i}{\sum_i \left[(x_i - xcg)^{\mathbf{2}} \cdot At_i\right]} \end{cases}$$

Tensile due to the moment about Y

$Ft_{i,j} := Ftdirect_{i,j} + Fmx_{i,j} + Fmy_{i,j}$

Shear on bolts

Secondary shear on bolts $\quad Fs_{i,j} := \dfrac{Mz_boltcg_j \cdot r_i \cdot As_i}{\sum_i \left[(r_i)^2 \cdot (As_i) \right]}$

$u_i := \mathrm{atan2}(x_i - xcg, y_i - ycg)$

Shear

$Sy_{i,j} := \sin\left(\dfrac{\beta}{2} - u_i\right) \cdot Fs_{i,j} \qquad Sx_{i,j} := -\cos\left(\dfrac{\beta}{2} - u_i\right) \cdot Fs_{i,j} \qquad u = \begin{pmatrix} 123 \\ -123 \\ 57 \\ -57 \end{pmatrix} \cdot deg$

Loads of first case

$Sx^{\langle 1 \rangle} = \begin{pmatrix} -522.98 \\ 522.98 \\ -522.98 \\ 522.98 \end{pmatrix} lbf \qquad Sy^{\langle 1 \rangle} = \begin{pmatrix} -339.23 \\ -339.23 \\ 339.23 \\ 339.23 \end{pmatrix} lbf$

$Fstot_{i,j} := \sqrt{\left(Sx_{i,j} + \dfrac{Fx_j}{2}\right)^2 + \left(Sy_{i,j} + \dfrac{Fy_j}{2}\right)^2}$

$\max(Fstot) = 1378.67\, lbf$

Assume that Fx and Fy are shared by only 2 bolts. $\quad \min(Fstot) = 1.38\, lbf$

The stack commands below are used to stack applied axial load (P), applied shear load (V), and applied moment (M) in ascending order per bolt. These loads are put into an array with the element/bolt number and load case number from above.

$P := \mathrm{stack}\left[(Ft^T)^{\langle 1 \rangle}, (Ft^T)^{\langle 2 \rangle}, (Ft^T)^{\langle 3 \rangle}, (Ft^T)^{\langle 4 \rangle} \right]$

$V := \mathrm{stack}\left[(Fstot^T)^{\langle 1 \rangle}, (Fstot^T)^{\langle 2 \rangle}, (Fstot^T)^{\langle 3 \rangle}, (Fstot^T)^{\langle 4 \rangle} \right]$

$M := \mathrm{stack}(M, M, M, M)$

The "Output" file outputs an array from left to right starting with the element identification (ID), Load case number (LC), applied load on the bolt (P), applied shear on the bolt (V), and applied moment on the bolt (M). The array is then written to a text file.

$Output := \mathrm{augment}\left(ID, LC, \dfrac{P}{lbf}, \dfrac{V}{lbf}, \dfrac{M}{in \cdot lbf}\right)$

Note Since the ID and LC numbers are dimensionless, the P, V, and M values are divided by their units in order to make the array dimensionless.

Size of the "Output" Array $\quad \mathrm{rows}(Output) = 2048$

(4 bolts x 256 load cases) x 2 joint = 2048 rows

WRITEPRN(**"output_aftbrkpas_r5_onorbit.txt"**) := Output

CHECK Bolts (EWB0420-6-30 bolts 0.375-24UNJF-3A, Material-A-286), Nut (NAS1805-6), Washer (NAS1587-6C)

data := READPRN("**output_aftbrkpas_r5_onorbit.txt**")

s := **1** .. rows(data)

Flange 1 Aft Bracket
Part number SDG39135814
Material 7050-T7451

Flange 2 PAS Platform
Part number SDG39135817
Material 7050-T7451

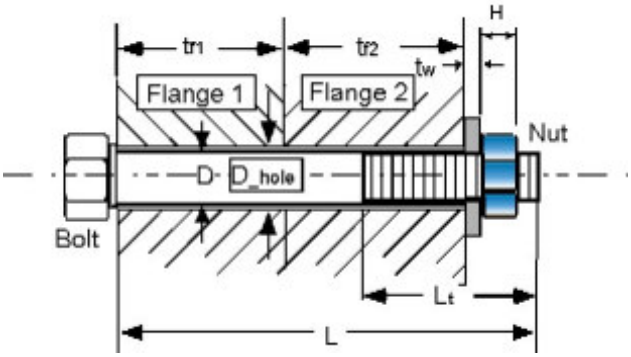

Loads

Applied tensile load $P_s := data_{s,3} \cdot lbf$ $ID_s := data_{s,1}$

Applied shear load $V_s := data_{s,4} \cdot lbf$ $LC_s := data_{s,2}$

Applied bending moment $M_s := data_{s,5} \cdot in \cdot lbf$

Factors of Safety

Ultimate SFu := **2.0** Yield SFy := **1.25**

Joint Separation SFsep := **1.2** Fitting factor FF := **1.15**

Temperature data

Assembly Temp_initial := **70**·deg

Maximum Temp_max := **151**·deg

Minimum Temp_min := −**43**·deg

Bolt and Nut Data

Nominal diameter of bolt D := **.375**·in

Total length of bolt L := **2.532**·in

Threaded length Lt := **0.657**·in

Number of threads/inch $Nt := 24 \cdot \frac{1}{in}$

Height of nut H := **0.375**·in

(If bolt is fully threaded, input Lt = L)

This file uses the calculations shown in \\escfil02\2i11_mathcad\8307_bolts\thread_data.mcd

Washer Data

Thickness of washers tw := **0.156**·in

Outer Diameter of washer Dw := **0.687**in

Inner Diameter of washer Dwi := **0.378**·in

Bolt head dia. across flats dw := **0.644**·in

Note If there is no washer tw, Dw and Dwi should be zero

Flange data

Thickness of flange 1 tf1 := **.350**·in

Thickness of flange 2 tf2 := **1.5**in

Diameter of hole D_hole := **0.428**·in

(used only if there is no washer)

Material Property Data

Bolt

Temperature correction factor bolt strength $TSu_bolt := \mathbf{0.96}$ Yield $TSy_bolt := \mathbf{0.96}$

Bolt ultimate tensile allowable stress $Ftu_bolt := \mathbf{200000} \cdot psi$

Bolt ultimate shear allowable stress $Fsu_bolt := \mathbf{0.6} \cdot Ftu_bolt$

Bolt yield Tensile allowable stress $Fty_bolt := \mathbf{180000} \cdot psi$

Temperature correction factor for bolt modulus $TE_bolt := \mathbf{0.96}$

Modulus of elasticity of bolt $E_bolt := \left(\mathbf{29.1} \cdot \mathbf{10}^{\mathbf{6}} \cdot psi\right)$

Thermal coefficient for bolt

$_bolt_hot := \mathbf{9.1} \cdot \mathbf{10}^{-\mathbf{6}} \cdot \frac{\frac{in}{in}}{deg}$

$_bolt_cold := \mathbf{8.7} \cdot \mathbf{10}^{-\mathbf{6}} \cdot \frac{\frac{in}{in}}{deg}$

Nut

Temperature correction factor for nut strength $TS_nut := \mathbf{0.96}$

Ultimate tensile allowable stress $Ftu_nut := \mathbf{180000} \cdot psi$

Ultimate Shear allowable stress $Fsu_nut := \mathbf{0.6} \cdot Ftu_nut$

Ultimate axial strength of nut $Ptu_nut := \mathbf{16488} \cdot lbf$ (180/125=1.44, 11450*1.44=16488, Ref.NAS1291)

Washer

Temperature correction factor for washer modulus $TE_washer := \mathbf{.96}$

Modulus of elasticity of washer $E_washer := \left(\mathbf{29.1} \cdot \mathbf{10}^{\mathbf{6}} \cdot psi\right)$

Flanges

Stiffness of the joint depends upon number of members in the grip of the fasteners, Modulus of elasticity of these members, and diameters of the bolt and the washer.

Temperature correction factor for flange 1 $Tf1E := \mathbf{.98}$ (modulus)

Temperature correction factor for flange 2 $Tf2E := \mathbf{.98}$

Modulus of elasticity for the parts in the joint $E_flange1 := \left(\mathbf{10.3} \cdot \mathbf{10}^{\mathbf{6}} \cdot psi\right)$ $E_flange2 := \left(\mathbf{10.3} \cdot \mathbf{10}^{\mathbf{6}} \cdot psi\right)$

Coefficient of thermal expansion for flanges

$_flange1_hot := \mathbf{12.8} \cdot \mathbf{10}^{-\mathbf{6}} \cdot \frac{\frac{in}{in}}{deg}$ $_flange2_hot := \mathbf{12.8} \cdot \mathbf{10}^{-\mathbf{6}} \cdot \frac{\frac{in}{in}}{deg}$

$_flange1_cold := \mathbf{12.1} \cdot \mathbf{10}^{-\mathbf{6}} \cdot \frac{\frac{in}{in}}{deg}$ $_flange2_cold := \mathbf{12.1} \cdot \mathbf{10}^{-\mathbf{6}} \cdot \frac{\frac{in}{in}}{deg}$

Torque/Preload data

Maximum torque (65% of yield) $Tmax := \mathbf{578} \cdot in \cdot lbf$ Loading plane factor $n := \mathbf{0.5}$

Minimum torque (95% of max. torque) $Tmin := \mathbf{549} in \cdot lbf$ Preload Uncertainty $= := \mathbf{0.25}$

Torque coefficient $k := \mathbf{0.15}$

Prepared By	B. Dyer	5/21/07	Engineering and Science Contract Group *Structural Analysis Section*	File Name Aft_PAS_r5.xmcd
Revised By	Kent Peters	5/6/09		
Checked By	C. Bala			Drawing No. SGG39135873
Title	**Bolts from PAS Aft Bracket to PAS Platform**			

This file uses the calculations shown in \\escfil02\2i11_mathcad\8307_bolts\multi_bolt_stiffness_nut_RevC

Bolt Load data

Bolt/joint stiffness factor	$y = \mathbf{0.287}$	Temperature Preload	$Pthr_pos = \mathbf{596.6} \cdot lbf$
Max preload	$PLDmax = \mathbf{13441} \cdot lbf$		$Pthr_neg = -\mathbf{764.8} \cdot lbf$
Min preload	$PLDmin = \mathbf{5913} \cdot lbf$	Uncertainty factor	$= = \mathbf{0.25}$
Joint separation load	$max(Psep) = \mathbf{4356} \cdot lbf$	Torque coefficient	$k = \mathbf{0.15}$
Max bolt load (ultimate)	$max(Pb) = \mathbf{14641} \cdot lbf$	Loading plane factor	$n = \mathbf{0.50}$
Max bolt load (yield)	$max(Pby) = \mathbf{14191} \cdot lbf$	Thread pullout strength required to develop full strength of bolt	$PAs = \mathbf{19798} \cdot lbf$
Bolt tensile ult strength	$PAt = \mathbf{15828} \cdot lbf$	Nut tensile ult strength	$Ptu_nut = \mathbf{15828} \cdot lbf$

Summary of Margins for bolt

Length_check = **"Bolt length is sufficient"**

Joint separation	$MS_min_{1,1} = \mathbf{0.38}$	Direct Thread shear Ult	$MS_min_{6,1} = \mathbf{1.37}$
Direct Tension Ultimate	$MS_min_{2,1} = \mathbf{0.90}$	Total Thread shear Ult	$MS_min_{7,1} = \mathbf{0.35}$
Direct Tension Yield	$MS_min_{3,1} = \mathbf{1.85}$	Shear Ultimate	$MS_min_{8,1} = \mathbf{3.01}$
Total Tension Ultimate	$MS_min_{4,1} = \mathbf{0.08}$	Bending Ultimate	$MS_min_{9,1} = \mathbf{10.00}$
Total Tension Yield	$MS_min_{5,1} = \mathbf{0.05}$	Combined shear, tension and bending ultimate	$MS_min_{10,1} = \mathbf{0.08}$

Determination of the smallest margin of safety for the bolt, and the failure mode

$MSbolt := min(MS)$

$MSbolt = \mathbf{0.05}$	Minimum Margin of Safety	Failure_Mode = **"Total Tension Yield"**
$MS_min_ID = \mathbf{710009003}$	Element Identification (710009) and Bolt Number (3) for Minimum Margin	
$MS_min_LC = \mathbf{5056}$	Load Case Number for Minimum Margin	
$MS_min_P = \mathbf{3630}$	Applied Tensile Load for Minimum Margin	
$MS_min_V = \mathbf{874.1}$	Applied Shear Load for Minimum Margin	
$MS_min_M = \mathbf{0}$	Applied Bending Moment for Minimum Margin	

Bolt Fail-Safe Analysis for Aft Bracket to PAS Platform Removing Bolt 4

Fail-safe analysis is done by removing one bolt at a time and the analysis is repeated 4 times. There are now 3, EWB0420 0.375-24 UNFJ fasteners, holding the aft bracket to the PAS platform. The drawing number for the Aft Brackets Installation is SGG39135873.

$$\text{bolt2} := \begin{array}{c} \begin{array}{cc} \text{size} & \text{thread/in} \end{array} \\ \begin{pmatrix} \mathbf{0.375} & \mathbf{24} \\ \mathbf{0.375} & \mathbf{24} \\ \mathbf{0.375} & \mathbf{24} \end{pmatrix} \end{array}$$

$s := \mathbf{1} .. \text{rows}(\text{bolt2})$

$N2_s := \text{bolt2}_{s,\mathbf{2}} \cdot \frac{\mathbf{1}}{\text{in}}$ pitch of bolt

$D2_s := \text{bolt2}_{s,\mathbf{1}} \cdot \text{in}$ bolt diameter

Tensile Area of bolt

$$At2_s := \beta \cdot \left(\frac{D2_s - \mathbf{0.9743} \cdot \frac{\mathbf{1}}{N2_s}}{\mathbf{2}} \right)^{\mathbf{2}}$$

Shear Area of bolt

$$As2_s := \beta \cdot \left(\frac{D2_s - \mathbf{1.299038} \cdot \frac{\mathbf{1}}{N2_s}}{\mathbf{2}} \right)^{\mathbf{2}}$$

Bolt Pattern

Bolt no.	x coordinate	y coordinate	z coordinate
$\begin{pmatrix} \mathbf{1} \\ \mathbf{2} \\ \mathbf{3} \end{pmatrix}$	$x2 := \begin{pmatrix} -1.5 \\ -\mathbf{1.5} \\ \mathbf{1.5} \end{pmatrix} \cdot \text{in}$	$y2 := \begin{pmatrix} 2.312 \\ -2.312 \\ \mathbf{2.312} \end{pmatrix} \cdot \text{in}$	$z2 := \begin{pmatrix} \mathbf{0} \\ \mathbf{0} \\ \mathbf{0} \end{pmatrix} \text{in}$

Note Bolt 4 is removed from the bolt pattern.

Location of applied forces and moments

$xforce2 := \mathbf{0.0}in$ $\quad yforce2 := \mathbf{0.0}in$ $\quad zforce2 := \mathbf{0.0}in$

$$cgload2 := \begin{pmatrix} xforce2 \\ yforce2 \\ zforce2 \end{pmatrix} \qquad cgload2 = \begin{pmatrix} \mathbf{0.00} \\ \mathbf{0.00} \\ \mathbf{0.00} \end{pmatrix} \cdot in$$

Center of gravity of bolt group

$$xcg2 := \frac{\sum_s x2_s}{rows(x2)} \quad xcg2 = -\mathbf{0.50} \cdot in \qquad ycg2 := \frac{\sum_s y2_s}{rows(y2)} \quad ycg2 = \mathbf{0.7707} \cdot in \qquad zcg2 := \frac{\sum_s z2_s}{rows(z2)} \quad zcg2 = \mathbf{0.00} \cdot in$$

$$cg_{bolt2} := \begin{pmatrix} xcg2 \\ ycg2 \\ zcg2 \end{pmatrix} \qquad cg_{bolt2} = \begin{pmatrix} -\mathbf{0.50} \\ \mathbf{0.77} \\ \mathbf{0.00} \end{pmatrix} \cdot in$$

Note Since the z direction is into the plate the loads are shared equally between the bolts. However, due to a failure in bolt 4, the x and y directions in the bolt pattern are unsymmetric and have a offset from the center of gravity.

Load Vector

$$r_{load2} := cgload2 - cg_{bolt2} \qquad r_{load2} = \begin{pmatrix} \mathbf{0.50} \\ -\mathbf{0.77} \\ \mathbf{0.00} \end{pmatrix} \cdot in$$

Distance from CG of Bolts to Individual Bolts for shear calculations

$$r2_s := \sqrt{(x2_s - xcg2)^2 + (y2_s - ycg2)^2} \qquad r2_s = \begin{pmatrix} \mathbf{1.837} \\ \mathbf{3.241} \\ \mathbf{2.525} \end{pmatrix} \cdot in$$

Reading database file for bolted joint

$data := READPRN(\mathbf{"boltsAftPlatform.txt"})$

$q := \mathbf{1} .. rows(data) \qquad num_bolts2 := rows(bolt2)$

Loads from 2-06 loads model

Shear in X axis $Fx2_q := -data_{q,3} \cdot lbf$

Moment about X axis $Mx2_q := -data_{q,6} \cdot in \cdot lbf$

Shear in Y axis $Fy2_q := -data_{q,4} \cdot lbf$

Moment about Y axis $My2_q := -data_{q,7} \cdot in \cdot lbf$

Axial Load $Fz2_q := -data_{q,5} \cdot lbf$

Torsion $Mz2_q := -data_{q,8} \cdot in \cdot lbf$

Element Identification $ID2_q := data_{q,1}$ $ID2_q := ID2_q \cdot 1000 + 1$ Counter for number of bolts in pattern

Load Case Number $LC2_q := data_{q,2}$

Applied Bending Moment at Bolts $M2_q := 0 \cdot in \cdot lbf$

Format of Output File

The stack command below is used to stack the element identifications (ID2) and load cases (LC2) in ascending order per bolt. See the array example above for explanation.
Note bolt number 4 is not included.

$ID2 := stack(ID2, ID2 + 1, ID2 + 2)$

$LC2 := stack(LC2, LC2, LC2)$

Moment Distribution

$$M_{tot2}^{\langle q \rangle} := \begin{pmatrix} Mx2_q \\ My2_q \\ Mz2_q \end{pmatrix} + r_{load2} \times \begin{pmatrix} Fx2_q \\ Fy2_q \\ Fz2_q \end{pmatrix}$$

Use the cross-product to determine the additional moments acting on the fasteners.

$Mx_boltcg2_q := M_{tot2_{1,q}}$ $My_boltcg2_q := M_{tot2_{2,q}}$ $Mz_boltcg2_q := M_{tot2_{3,q}}$

Tension on bolts

$$Ftdirect2_{s,q} := \frac{Fz2_q}{num_bolts2}$$

Direct tensile load calculation

$$Fmx2_{s,q} := \begin{cases} 0 \cdot lbf & \text{if } (y2_s - ycg2) = 0 \cdot in \\ \dfrac{[Mx_boltcg2_q \cdot (y2_s - ycg2)] At2_s}{\sum_s \left[(y2_s - ycg2)^2 \cdot At2_s \right]} & \end{cases}$$

$$Fmy2_{s,q} := \begin{cases} 0 \cdot lbf & \text{if } (x2_s - xcg2) = 0 \cdot in \\ \dfrac{-[My_boltcg2_q \cdot (x2_s - xcg2)] \cdot At2_s}{\sum_s \left[(x2_s - xcg2)^2 \cdot At2_s \right]} & \end{cases}$$

$Ft2_{s,q} := Ftdirect2_{s,q} + Fmx2_{s,q} + Fmy2_{s,q}$

Total Tensile load

atan2(■,■)

Shear on bolts

Secondary shear on bolts $\quad Fs2_{s,q} := \dfrac{Mz_boltcg2_q \cdot r2_s \cdot As2_s}{\sum_s \left[(r2_s)^2 \cdot (As2_s) \right]}$

$u_s := \mathrm{atan2}(x2_s - xcg2, y2_s - ycg2)$

Shear $\quad Sx := 0 \quad Sy := 0$

$Sy_{s,q} := \sin\left(\frac{\beta}{2} - u_s\right) \cdot Fs2_{s,q} \qquad Sx_{s,q} := -\cos\left(\frac{\beta}{2} - u_s\right) \cdot Fs2_{s,q}$

$u_s =$

122.98	·deg
-107.97	
37.62	

Loads of first case

$$Sy^{\langle 1 \rangle} = \begin{pmatrix} -293.43 \\ -293.43 \\ 586.86 \end{pmatrix} lbf \qquad Sx^{\langle 1 \rangle} = \begin{pmatrix} -452.27 \\ 904.54 \\ -452.27 \end{pmatrix} lbf$$

$$Fstot2_{s,q} := \sqrt{\left(Sx_{s,q} + \frac{Fx_q}{2}\right)^2 + \left(Sy_{s,q} + \frac{Fy_q}{2}\right)^2}$$

$\max(Fstot2) = 1697.45\,lbf$

Assume that Fx and Fy are shared by only 2 bolts. $\quad \min(Fstot2) = 4.02\,lbf$

The stack commands below are used to stack applied axial load (P2), applied shear load (V2), and applied moment (M2) in ascending order per bolt. These loads are put into an array with the element/bolt number and load case number from above. See the "Output2" file below.
Note there are only 3 bolts, since bolt number 4 is not included.

$P2 := \mathrm{stack}\left[(Ft2^T)^{\langle 1 \rangle}, (Ft2^T)^{\langle 2 \rangle}, (Ft2^T)^{\langle 3 \rangle} \right]$

$V2 := \mathrm{stack}\left[(Fstot2^T)^{\langle 1 \rangle}, (Fstot2^T)^{\langle 2 \rangle}, (Fstot2^T)^{\langle 3 \rangle} \right]$

$M2 := \mathrm{stack}(M2, M2, M2)$

The "Output2" file below outputs an array from left to right starting with the element identification (ID2), Load case number (LC2), applied load on the bolt (P2), applied shear on the bolt (V2), and applied moment on the bolt (M2). See the output array example above. The array is written to a text file.

$Output2 := \mathrm{augment}\left(ID2, LC2, \frac{P2}{lbf}, \frac{V2}{lbf}, \frac{M2}{in \cdot lbf}\right)$

Note Since the ID2 and LC2 numbers are dimensionless, the P2, V2, and M2 values are divided by their units in order to make the array dimensionless.

Size of the "Output2" Array $\quad \mathrm{rows}(Output2) = 1536$

(3 bolts x 256 load cases) x 2 joint = 1536 rows

WRITEPRN(**"output_aftbrkpas_r5_onorbit_fs1.txt"**) := Output2

Bolt Fail-safe Results

The array from the text file above is read

data_fs := READPRN("**output_aftbrkpas_r5_onorbit_fs1.txt**")

s := **1** .. rows(data_fs)

Fail-safe Loads

Applied tensile load $P_FS_s := data_fs_{s,3} \cdot lbf$ $ID_FS_s := data_fs_{s,1}$

Applied shear load $V_FS_s := data_fs_{s,4} \cdot lbf$ $LC_FS_s := data_fs_{s,2}$

Applied bending moment $M_FS_s := data_fs_{s,5} \cdot in \cdot lbf$

Fail-safe Factors of Safety

Ultimate SFu_FS := **1.0**

Joint Separation SFsep_FS := **1.0**

Prepared By	B. Dyer	5/21/07	Engineering and Science Contract Group *Structural Analysis Section*	File Name Aft_PAS_r5.xmcd
Revised By	Kent Peters	5/6/09		
Checked By	C. Bala			Drawing No. SGG39135873
Title	**Bolts from PAS Aft Bracket to PAS Platform**			

This file uses the calculations shown in \\escfil02\2i11_mathcad\8307_bolts\multi_bolt_stiffness_nut_FS_RevC

Fail-Safe Stiffness File

Bolt Fail-safe Load data

Joint separation load	max(Psep_FS) = **5951.263** lbf	max(P_FS) = **5951.263** lbf
Max bolt load (ultimate)	max(Pb_FS) = **14424.6** lbf	max(V_FS) = **1697.446** lbf

Summary of fail-safe Margins Removing Bolt 4

Joint separation	$MS_minFS_{1,1}$ = **0.01**	Total Thread shear Ult	$MS_minFS_{5,1}$ = **0.37**
Direct Tension Ultimate	$MS_minFS_{2,1}$ = **1.31**	Shear Ultimate	$MS_minFS_{6,1}$ = **5.52**
Total Tension Ultimate	$MS_minFS_{3,1}$ = **0.10**	Bending Ultimate	$MS_minFS_{7,1}$ = **10.00**
Direct Thread shear Ultimate	$MS_minFS_{4,1}$ = **1.89**	Combined shear, tension and bending ultimate	$MS_minFS_{8,1}$ = **0.10**

Determination of the smallest fail-safe margin of safety for the bolt, and the failure mode

MSbolt_FS := min(MS_FS)

MSbolt_FS = **0.01**	Failure_Mode_FS = **"Joint Separation"**
MS_min_ID = **710009003**	Element Identification (710009) and Bolt Number (3) for Minimum Margin
MS_min_LC = **5056**	Load Case Number for Minimum Margin
MS_min_P = **5951.3**	Applied Tensile Load for Minimum Margin
MS_min_V = **735.2**	Applied Shear Load for Minimum Margin
MS_min_M = **0**	Applied Bending Moment for Minimum Margin

Bolt Fail-Safe Analysis for Aft Bracket to PAS Platform Removing Bolt 3

Fail-safe analysis is done by removing one bolt at a time and the analysis is repeated 4 times. There are now 3, EWB0420 0.375-24 UNFJ fasteners, holding the aft bracket to the PAS platform. The drawing number for the Aft Brackets Installation is SGG39135873.

size thread/in

$$bolt2 := \begin{pmatrix} 0.375 & 24 \\ 0.375 & 24 \\ 0.375 & 24 \end{pmatrix}$$

$s := 1 .. rows(bolt2)$

$N2_s := bolt2_{s,2} \cdot \frac{1}{in}$ pitch of bolt

$D2_s := bolt2_{s,1} \cdot in$ bolt diameter

Tensile Area of bolt

$$At2_s := \beta \cdot \left(\frac{D2_s - 0.9743 \cdot \frac{1}{N2_s}}{2} \right)^2$$

Shear Area of bolt

$$As2_s := \beta \cdot \left(\frac{D2_s - 1.299038 \cdot \frac{1}{N2_s}}{2} \right)^2$$

Bolt Pattern

Bolt no.	x coordinate	y coordinate	z coordinate
$\begin{pmatrix} 1 \\ 2 \\ 4 \end{pmatrix}$	$x2 := \begin{pmatrix} -1.5 \\ -1.5 \\ 1.5 \end{pmatrix} \cdot in$	$y2 := \begin{pmatrix} 2.312 \\ -2.312 \\ -2.312 \end{pmatrix} \cdot in$	$z2 := \begin{pmatrix} 0 \\ 0 \\ 0 \end{pmatrix} in$

Note Bolt 3 is removed from the bolt pattern.

Location of applied forces and moments

$xforce2 := \mathbf{0.0}in$ $\quad yforce2 := \mathbf{0.0}in$ $\quad zforce2 := \mathbf{0.0}in$

$$cgload2 := \begin{pmatrix} xforce2 \\ yforce2 \\ zforce2 \end{pmatrix} \qquad cgload2 = \begin{pmatrix} \mathbf{0.00} \\ \mathbf{0.00} \\ \mathbf{0.00} \end{pmatrix} \cdot in$$

Center of gravity of bolt group

$$xcg2 := \frac{\sum_s x2_s}{rows(x2)} \quad xcg2 = -\mathbf{0.50} \cdot in \qquad ycg2 := \frac{\sum_s y2_s}{rows(y2)} \quad ycg2 = -\mathbf{0.77} \cdot in \qquad zcg2 := \frac{\sum_s z2_s}{rows(z2)} \quad zcg2 = \mathbf{0.00} \cdot in$$

$$cg_{bolt2} := \begin{pmatrix} xcg2 \\ ycg2 \\ zcg2 \end{pmatrix} \qquad cg_{bolt2} = \begin{pmatrix} -\mathbf{0.50} \\ -\mathbf{0.77} \\ \mathbf{0.00} \end{pmatrix} \cdot in$$

Note Since the z direction is into the plate the loads are shared equally between the bolts. However, due to a failure in bolt 3, the x and y directions in the bolt pattern are unsymmetric and have a offset from the center of gravity.

Load Vector

$$r_{load2} := cgload2 - cg_{bolt2} \qquad r_{load2} = \begin{pmatrix} \mathbf{0.50} \\ \mathbf{0.77} \\ \mathbf{0.00} \end{pmatrix} \cdot in$$

Distance from CG of Bolts to Individual Bolts for shear calculations

$$r2_s := \sqrt{(x2_s - xcg2)^2 + (y2_s - ycg2)^2} \qquad r2_s = \begin{pmatrix} \mathbf{3.241} \\ \mathbf{1.837} \\ \mathbf{2.525} \end{pmatrix} \cdot in$$

Reading database file for bolted joint

$ID2 := \mathbf{0}$ $\quad LC2 := \mathbf{0}$ $\quad M2 := \mathbf{0}$

$data := READPRN(\mathbf{"boltsAftPlatform.txt"})$

$q := \mathbf{1} .. rows(data)$ $\qquad num_bolts2 := rows(bolt2)$

Loads from 2-06 loads model

Shear in X axis $Fx2_q := -data_{q,\mathbf{3}} \cdot lbf$

Moment about X axis $Mx2_q := -data_{q,\mathbf{6}} \cdot in \cdot lbf$

Shear in Y axis $Fy2_q := -data_{q,\mathbf{4}} \cdot lbf$

Moment about Y axis $My2_q := -data_{q,\mathbf{7}} \cdot in \cdot lbf$

Axial Load $Fz2_q := -data_{q,\mathbf{5}} \cdot lbf$

Torsion $Mz2_q := -data_{q,\mathbf{8}} \cdot in \cdot lbf$

Element Identification $ID2_q := data_{q,\mathbf{1}}$

$ID2_q := ID2_q \cdot \mathbf{1000} + \mathbf{1}$ Counter for number of bolts in pattern

Load Case Number $LC2_q := data_{q,\mathbf{2}}$

Applied Bending Moment at Bolts $M2_q := \mathbf{0} \cdot in \cdot lbf$

Format of Output File

The stack command below is used to stack the element identifications (ID2) and load cases (LC2) in ascending order per bolt. See the array example above for explanation.
Note bolt number 3 is not included.

$ID2 := stack(ID2, ID2 + \mathbf{1}, ID2 + \mathbf{3})$

$LC2 := stack(LC2, LC2, LC2)$

Moment Distribution

$$M_{tot2}^{\langle q \rangle} := \begin{pmatrix} Mx2_q \\ My2_q \\ Mz2_q \end{pmatrix} + r_{load2} \times \begin{pmatrix} Fx2_q \\ Fy2_q \\ Fz2_q \end{pmatrix}$$

Use the cross-product to determine the additional moments acting on the fasteners.

$Mx_boltcg2_q := M_{tot2_{\mathbf{1},q}}$ $My_boltcg2_q := M_{tot2_{\mathbf{2},q}}$ $Mz_boltcg2_q := M_{tot2_{\mathbf{3},q}}$

Tension on bolts

$$Ftdirect2_{s,q} := \frac{Fz2_q}{num_bolts2}$$

Direct tensile load calculation

$$Fmx2_{s,q} := \begin{cases} \mathbf{0} \cdot lbf & \text{if } (y2_s - ycg2) = \mathbf{0} \cdot in \\ \dfrac{[Mx_boltcg2_q \cdot (y2_s - ycg2)] At2_s}{\sum_s \left[(y2_s - ycg2)^{\mathbf{2}} \cdot At2_s \right]} & \end{cases}$$

$$Fmy2_{s,q} := \begin{cases} \mathbf{0} \cdot lbf & \text{if } (x2_s - xcg2) = \mathbf{0} \cdot in \\ \dfrac{-[My_boltcg2_q \cdot (x2_s - xcg2)] \cdot At2_s}{\sum_s \left[(x2_s - xcg2)^{\mathbf{2}} \cdot At2_s \right]} & \end{cases}$$

$$Ft2_{s,q} := Ftdirect2_{s,q} + Fmx2_{s,q} + Fmy2_{s,q}$$

Total Tensile load

Shear on bolts

Secondary shear on bolts $\quad Fs2_{s,q} := \dfrac{Mz_boltcg2_q \cdot r2_s \cdot As2_s}{\sum_s \left[(r2_s)^2 \cdot (As2_s) \right]}$

$u_s := \mathrm{atan2}(x2_s - xcg2, y2_s - ycg2)$

Shear $\quad Sx := \mathbf{0} \qquad Sy := \mathbf{0}$

$Sy_{s,q} := \sin\left(\dfrac{\beta}{\mathbf{2}} - u_s\right) \cdot Fs2_{s,q} \qquad Sx_{s,q} := -\cos\left(\dfrac{\beta}{\mathbf{2}} - u_s\right) \cdot Fs2_{s,q}$

$u_s =$

108
-123
-37.6

$\cdot deg$

Loads of first case

$Sx^{\langle \mathbf{1} \rangle} = \begin{pmatrix} \mathbf{-1001.90} \\ \mathbf{500.95} \\ \mathbf{500.95} \end{pmatrix} lbf \qquad Sy^{\langle \mathbf{1} \rangle} = \begin{pmatrix} \mathbf{-325.01} \\ \mathbf{-325.01} \\ \mathbf{650.02} \end{pmatrix} lbf$

$Fstot2_{s,q} := \sqrt{\left(Sx_{s,q} + \dfrac{Fx_q}{\mathbf{2}}\right)^2 + \left(Sy_{s,q} + \dfrac{Fy_q}{\mathbf{2}}\right)^2}$

$\max(Fstot2) = \mathbf{1764.29}\, lbf$

Assume that Fx and Fy are shared by only 2 bolts. $\quad \min(Fstot2) = \mathbf{1.94}\, lbf$

The stack commands below are used to stack applied axial load (P2), applied shear load (V2), and applied moment (M2) in ascending order per bolt. These loads are put into an array with the element/bolt number and load case number from above. See the "Output2" file below.
Note there are only 3 bolts, since bolt number 3 is not included.

$P2 := \mathrm{stack}\left[(Ft2^T)^{\langle \mathbf{1} \rangle}, (Ft2^T)^{\langle \mathbf{2} \rangle}, (Ft2^T)^{\langle \mathbf{3} \rangle} \right]$

$V2 := \mathrm{stack}\left[(Fstot2^T)^{\langle \mathbf{1} \rangle}, (Fstot2^T)^{\langle \mathbf{2} \rangle}, (Fstot2^T)^{\langle \mathbf{3} \rangle} \right]$

$M2 := \mathrm{stack}(M2, M2, M2)$

The "Output2" file below outputs an array from left to right starting with the element identification (ID2), Load case number (LC2), applied load on the bolt (P2), applied shear on the bolt (V2), and applied moment on the bolt (M2). See the output array example above. The array is written to a text file.

$Output2 := \mathrm{augment}\left(ID2, LC2, \dfrac{P2}{lbf}, \dfrac{V2}{lbf}, \dfrac{M2}{in \cdot lbf}\right)$

Note Since the ID2 and LC2 numbers are dimensionless, the P2, V2, and M2 values are divided by their units in order to make the array dimensionless.

Size of the "Output2" Array $\quad \mathrm{rows}(Output2) = \mathbf{1536}$

(3 bolts x 256 load cases) x 2 joint = 1536 rows

WRITEPRN(**"output_aftbrkpas_r5_onorbit_fs2.txt"**) := Output2

Bolt Fail-safe Results

The array from the text file above is read

data_fs := READPRN("**output_aftbrkpas_r5_onorbit_fs2.txt**") s := **1** .. rows(data_fs)

Fail-safe Loads

Applied tensile load $P_FS_s := data_fs_{s,3} \cdot lbf$ $ID_FS_s := data_fs_{s,1}$

Applied shear load $V_FS_s := data_fs_{s,4} \cdot lbf$ $LC_FS_s := data_fs_{s,2}$

Applied bending moment $M_FS_s := data_fs_{s,5} \cdot in \cdot lbf$

Fail-safe Factors of Safety

Ultimate SFu_FS := **1.0**

Joint Separation SFsep_FS := **1.0**

Prepared By	B. Dyer	5/21/07	Engineering and Science Contract Group *Structural Analysis Section*	File Name Aft_PAS_r5.xmcd
Revised By	Kent Peters	5/6/09		
Checked By	C. Bala			Drawing No. SGG39135873
Title	**Bolts from PAS Aft Bracket to PAS Platform**			

This file uses the calculations shown in \\escfil02\2i11_mathcad\8307_bolts\ multi_bolt_stiffness_nut_FS_RevC

Fail-Safe Stiffness File

Bolt Fail-safe Load data

Joint separation load	max(Psep_FS) = **4872.074** lbf	max(P_FS) = **4872.074** lbf
Max bolt load (ult)	max(Pb_FS) = **14246.2** lbf	max(V_FS) = **1764.294** lbf

Summary of fail-safe Margins Removing Bolt 3

Joint separation	$MS_minFS_{1,1}$ = **0.23**	Total Thread shear Ult	$MS_minFS_{5,1}$ = **0.39**
Direct Tension Ultimate	$MS_minFS_{2,1}$ = **1.83**	Shear Ultimate	$MS_minFS_{6,1}$ = **5.27**
Total Tension Ultimate	$MS_minFS_{3,1}$ = **0.11**	Bending Ultimate	$MS_minFS_{7,1}$ = **10.00**
Direct Thread shear Ult	$MS_minFS_{4,1}$ = **2.53**	Combined shear, tension and bending ultimate	$MS_minFS_{8,1}$ = **0.11**

Determination of the smallest fail-safe margin of safety for the bolt, and the failure mode

MSbolt_FS := min(MS_FS)

MSbolt_FS = **0.11**	Failure_Mode_FS = **"Combined Shear Tension Bending Ultimate"**
MS_min_ID = **710010001**	Element Identification (7100010) and Bolt Number (1) for Minimum Margin
MS_min_LC = **5060**	Load Case Number for Minimum Margin
MS_min_P = **4872.1**	Applied Tensile Load for Minimum Margin
MS_min_V = **1525.1**	Applied Shear Load for Minimum Margin
MS_min_M = **0**	Applied Bending Moment for Minimum Margin

Bolt Fail-Safe Analysis for Aft Bracket to PAS Platform Removing Bolt 2

Fail-safe analysis is done by removing one bolt at a time and the analysis is repeated 4 times. There are now 3, EWB0420 0.375-24 UNFJ fasteners, holding the aft bracket to the PAS platform. The drawing number for the Aft Brackets Installation is SGG39135873.

size thread/in

$$bolt2 := \begin{pmatrix} 0.375 & 24 \\ 0.375 & 24 \\ 0.375 & 24 \end{pmatrix}$$

$s := 1 .. rows(bolt2)$

$N2_s := bolt2_{s,2} \cdot \frac{1}{in}$ pitch of bolt

$D2_s := bolt2_{s,1} \cdot in$ bolt diameter

Tensile Area of bolt

$$At2_s := \beta \cdot \left(\frac{D2_s - 0.9743 \cdot \frac{1}{N2_s}}{2} \right)^2$$

Shear Area of bolt

$$As2_s := \beta \cdot \left(\frac{D2_s - 1.299038 \cdot \frac{1}{N2_s}}{2} \right)^2$$

Bolt Pattern

Bolt no.	x coordinate	y coordinate	z coordinate
$\begin{pmatrix} 1 \\ 3 \\ 4 \end{pmatrix}$	$x2 := \begin{pmatrix} -1.5 \\ 1.5 \\ 1.5 \end{pmatrix} \cdot in$	$y2 := \begin{pmatrix} 2.312 \\ 2.312 \\ -2.312 \end{pmatrix} \cdot in$	$z2 := \begin{pmatrix} 0 \\ 0 \\ 0 \end{pmatrix} in$

Note Bolt 2 is removed from the bolt pattern.

Location of applied forces and moments

$xforce2 := \mathbf{0.0}in$ $\quad yforce2 := \mathbf{0.0}in$ $\quad zforce2 := \mathbf{0.0}in$

$$cgload2 := \begin{pmatrix} xforce2 \\ yforce2 \\ zforce2 \end{pmatrix} \qquad cgload2 = \begin{pmatrix} \mathbf{0.00} \\ \mathbf{0.00} \\ \mathbf{0.00} \end{pmatrix} \cdot in$$

Center of gravity of bolt group

$$xcg2 := \frac{\sum_s x2_s}{rows(x2)} \quad xcg2 = \mathbf{0.50} \cdot in \qquad ycg2 := \frac{\sum_s y2_s}{rows(y2)} \quad ycg2 = \mathbf{0.77} \cdot in \qquad zcg2 := \frac{\sum_s z2_s}{rows(z2)} \quad zcg2 = \mathbf{0.00} \cdot in$$

$$cg_{bolt2} := \begin{pmatrix} xcg2 \\ ycg2 \\ zcg2 \end{pmatrix} \qquad cg_{bolt2} = \begin{pmatrix} \mathbf{0.50} \\ \mathbf{0.77} \\ \mathbf{0.00} \end{pmatrix} \cdot in$$

Note Since the z direction is into the plate the loads are shared equally between the bolts. However, due to a failure in bolt 2, the x and y directions in the bolt pattern are unsymmetric and have a offset from the center of gravity.

Load Vector

$$r_{load2} := cgload2 - cg_{bolt2} \qquad r_{load2} = \begin{pmatrix} \mathbf{-0.50} \\ \mathbf{-0.77} \\ \mathbf{0.00} \end{pmatrix} \cdot in$$

Distance from CG of Bolts to Individual Bolts for shear calculations

$$r2_s := \sqrt{(x2_s - xcg2)^2 + (y2_s - ycg2)^2} \qquad r2_s = \begin{pmatrix} \mathbf{2.525} \\ \mathbf{1.837} \\ \mathbf{3.241} \end{pmatrix} \cdot in$$

Reading database file for bolted joint

$ID2 := \mathbf{0}$ $\quad LC2 := \mathbf{0}$ $\quad M2 := \mathbf{0}$

$data := READPRN(\mathbf{"boltsAftPlatform.txt"})$

$q := \mathbf{1} .. rows(data)$ $\quad num_bolts2 := rows(bolt2)$

Loads from 2-06 loads model

Shear in X axis $Fx2_q := -data_{q,\mathbf{3}} \cdot lbf$

Moment about X axis $Mx2_q := -data_{q,\mathbf{6}} \cdot in \cdot lbf$

Shear in Y axis $Fy2_q := -data_{q,\mathbf{4}} \cdot lbf$

Moment about Y axis $My2_q := -data_{q,\mathbf{7}} \cdot in \cdot lbf$

Axial Load $Fz2_q := -data_{q,\mathbf{5}} \cdot lbf$

Torsion $Mz2_q := -data_{q,\mathbf{8}} \cdot in \cdot lbf$

Element Identification $ID2_q := data_{q,\mathbf{1}}$

$ID2_q := ID2_q \cdot \mathbf{1000} + \mathbf{1}$ Counter for number of bolts in pattern

Load Case Number $LC2_q := data_{q,\mathbf{2}}$

Applied Bending Moment at Bolts $M2_q := \mathbf{0} \cdot in \cdot lbf$

Format of Output File

The stack command below is used to stack the element identifications (ID2) and load cases (LC2) in ascending order per bolt. See the array example above for explanation.
Note bolt number 2 is not included.

$ID2 := stack(ID2, ID2 + \mathbf{2}, ID2 + \mathbf{3})$

$LC2 := stack(LC2, LC2, LC2)$

Moment Distribution

$$M_{tot2}^{\langle q \rangle} := \begin{pmatrix} Mx2_q \\ My2_q \\ Mz2_q \end{pmatrix} + r_{load2} \times \begin{pmatrix} Fx2_q \\ Fy2_q \\ Fz2_q \end{pmatrix}$$

Use the cross-product to determine the additional moments acting on the fasteners.

$Mx_boltcg2_q := M_{tot2_{\mathbf{1},q}}$ $My_boltcg2_q := M_{tot2_{\mathbf{2},q}}$ $Mz_boltcg2_q := M_{tot2_{\mathbf{3},q}}$

Tension on bolts

$$Ftdirect2_{s,q} := \frac{Fz2_q}{num_bolts2}$$

Direct tensile load calculation

$$Fmx2_{s,q} := \begin{cases} \mathbf{0} \cdot lbf & \text{if } (y2_s - ycg2) = \mathbf{0} \cdot in \\ \dfrac{[Mx_boltcg2_q \cdot (y2_s - ycg2)] At2_s}{\sum_s \left[(y2_s - ycg2)^{\mathbf{2}} \cdot At2_s \right]} & \end{cases}$$

$$Fmy2_{s,q} := \begin{cases} \mathbf{0} \cdot lbf & \text{if } (x2_s - xcg2) = \mathbf{0} \cdot in \\ \dfrac{-[My_boltcg2_q \cdot (x2_s - xcg2)] \cdot At2_s}{\sum_s \left[(x2_s - xcg2)^{\mathbf{2}} \cdot At2_s \right]} & \end{cases}$$

$Ft2_{s,q} := Ftdirect2_{s,q} + Fmx2_{s,q} + Fmy2_{s,q}$ Total Tensile load

Shear on bolts

Secondary shear on bolts $\quad Fs2_{s,q} := \dfrac{Mz_boltcg2_q \cdot r2_s \cdot As2_s}{\sum_s \left[(r2_s)^2 \cdot (As2_s) \right]}$

$u_s := \mathrm{atan2}(x2_s - xcg2, y2_s - ycg2)$

Shear $\quad Sx := \mathbf{0} \qquad Sy := \mathbf{0}$

$Sy_{s,q} := \sin\left(\dfrac{\beta}{\mathbf{2}} - u_s\right) \cdot Fs2_{s,q} \qquad Sx_{s,q} := -\cos\left(\dfrac{\beta}{\mathbf{2}} - u_s\right) \cdot Fs2_{s,q}$

$u_s =$

142.4
57
-72

$\cdot deg$

Loads of first case

$Sx^{\langle \mathbf{1} \rangle} = \begin{pmatrix} \mathbf{-545.11} \\ \mathbf{-545.11} \\ \mathbf{1090.22} \end{pmatrix} lbf \qquad Sy^{\langle \mathbf{1} \rangle} = \begin{pmatrix} \mathbf{-707.33} \\ \mathbf{353.66} \\ \mathbf{353.66} \end{pmatrix} lbf$

$Fstot2_{s,q} := \sqrt{\left(Sx_{s,q} + \dfrac{Fx_q}{\mathbf{2}}\right)^2 + \left(Sy_{s,q} + \dfrac{Fy_q}{\mathbf{2}}\right)^2}$

$\max(Fstot2) = \mathbf{1716.41}\, lbf$

Assume that Fx and Fy are shared by only 2 bolts. $\quad \min(Fstot2) = \mathbf{3.85}\, lbf$

The stack commands below are used to stack applied axial load (P2), applied shear load (V2), and applied moment (M2) in ascending order per bolt. These loads are put into an array with the element/bolt number and load case number from above. See the "Output2" file below.
Note there are only 3 bolts, since bolt number 2 is not included.

$P2 := \mathrm{stack}\left[(Ft2^T)^{\langle \mathbf{1} \rangle}, (Ft2^T)^{\langle \mathbf{2} \rangle}, (Ft2^T)^{\langle \mathbf{3} \rangle} \right]$

$V2 := \mathrm{stack}\left[(Fstot2^T)^{\langle \mathbf{1} \rangle}, (Fstot2^T)^{\langle \mathbf{2} \rangle}, (Fstot2^T)^{\langle \mathbf{3} \rangle} \right]$

$M2 := \mathrm{stack}(M2, M2, M2)$

The "Output2" file below outputs an array from left to right starting with the element identification (ID2), Load case number (LC2), applied load on the bolt (P2), applied shear on the bolt (V2), and applied moment on the bolt (M2). See the output array example above. The array is written to a text file.

$Output2 := \mathrm{augment}\left(ID2, LC2, \dfrac{P2}{lbf}, \dfrac{V2}{lbf}, \dfrac{M2}{in \cdot lbf}\right)$

Note Since the ID2 and LC2 numbers are dimensionless, the P2, V2, and M2 values are divided by their units in order to make the array dimensionless.

Size of the "Output2" Array $\quad \mathrm{rows}(Output2) = \mathbf{1536}$

(3 bolts x 256 load cases) x 2 joint = 1536 rows

WRITEPRN(**"output_aftbrkpas_r5_onorbit_fs3.txt"**) := Output2

Bolt Fail-safe Results

The array from the text file above is read

data_fs := READPRN("**output_aftbrkpas_r5_onorbit_fs3.txt**") s := **1** .. rows(data_fs)

Fail-safe Loads

Applied tensile load $P_FS_s := data_fs_{s,3} \cdot lbf$ $ID_FS_s := data_fs_{s,1}$

Applied shear load $V_FS_s := data_fs_{s,4} \cdot lbf$ $LC_FS_s := data_fs_{s,2}$

Applied bending moment $M_FS_s := data_fs_{s,5} \cdot in \cdot lbf$

Fail-safe Factors of Safety

Ultimate SFu_FS := **1.0**

Joint Separation SFsep_FS := **1.0**

Prepared By	B. Dyer	5/21/07	Engineering and Science Contract Group *Structural Analysis Section*	File Name Aft_PAS_r5.xmcd
Revised By	Kent Peters	5/6/09		
Checked By	C. Bala			Drawing No. SGG39135873
Title	Bolts from PAS Aft Bracket to PAS Platform			

This file uses the calculations shown in \\escfil02\2i11_mathcad\8307_bolts\ multi_bolt_stiffness_nut_FS_RevC

Fail-Safe Stiffness File

Bolt Fail-safe Load data

Joint separation load	max(Psep_FS) = **5941.62** lbf	max(P_FS) = **5941.62** lbf
Max bolt load (ultimate)	max(Pb_FS) = **14423** lbf	max(V_FS) = **1716.415** lbf

Summary of fail-safe Margins Removing Bolt 2

Joint separation	$MS_minFS_{1,1}$ = **0.01**	Total Thread shear Ult	$MS_minFS_{5,1}$ = **0.37**
Direct Tension Ultimate	$MS_minFS_{2,1}$ = **1.32**	Shear Ultimate	$MS_minFS_{6,1}$ = **5.45**
Total Tension Ultimate	$MS_minFS_{3,1}$ = **0.10**	Bending Ultimate	$MS_minFS_{7,1}$ = **10.00**
Direct Thread shear Ultimate	$MS_minFS_{4,1}$ = **1.90**	Combined shear, tension and bending ultimate	$MS_minFS_{8,1}$ = **0.10**

Determination of the smallest fail-safe margin of safety for the bolt, and the failure mode

MSbolt_FS := min(MS_FS)

MSbolt_FS = **0.01**	Failure_Mode_FS = **"Joint Separation"**
MS_min_ID = **710010001**	Element Identification (710010) and Bolt Number (1) for Minimum Margin
MS_min_LC = **5060**	Load Case Number for Minimum Margin
MS_min_P = **5941.6**	Applied Tensile Load for Minimum Margin
MS_min_V = **724.9**	Applied Shear Load for Minimum Margin
MS_min_M = **0**	Applied Bending Moment for Minimum Margin

Bolt Fail-Safe Analysis for Aft Bracket to PAS Platform Removing Bolt 1

Fail-safe analysis is done by removing one bolt at a time and the analysis is repeated 4 times. There are now 3, EWB0420 0.375-24 UNFJ fasteners, holding the aft bracket to the PAS platform. The drawing number for the Aft Brackets Installation is SGG39135873.

$$bolt2 := \begin{array}{cc} \text{size} & \text{thread/in} \\ \end{array} \begin{pmatrix} 0.375 & 24 \\ 0.375 & 24 \\ 0.375 & 24 \end{pmatrix}$$

$s := 1 .. rows(bolt2)$

$N2_s := bolt2_{s,2} \cdot \frac{1}{in}$ pitch of bolt

$D2_s := bolt2_{s,1} \cdot in$ bolt diameter

Tensile Area of bolt

$$At2_s := \beta \cdot \left(\frac{D2_s - 0.9743 \cdot \frac{1}{N2_s}}{2} \right)^2$$

Shear Area of bolt

$$As2_s := \beta \cdot \left(\frac{D2_s - 1.299038 \cdot \frac{1}{N2_s}}{2} \right)^2$$

Bolt Pattern

Bolt no.	x coordinate	y coordinate	z coordinate
$\begin{pmatrix} 2 \\ 3 \\ 4 \end{pmatrix}$	$x2 := \begin{pmatrix} -1.5 \\ 1.5 \\ 1.5 \end{pmatrix} \cdot in$	$y2 := \begin{pmatrix} -2.312 \\ 2.312 \\ -2.312 \end{pmatrix} \cdot in$	$z2 := \begin{pmatrix} 0 \\ 0 \\ 0 \end{pmatrix} in$

Note Bolt 1 is removed from the bolt pattern.

Location of applied forces and moments

$xforce2 := \mathbf{0.0}in$ $\quad yforce2 := \mathbf{0.0}in$ $\quad zforce2 := \mathbf{0.0}in$

$$cgload2 := \begin{pmatrix} xforce2 \\ yforce2 \\ zforce2 \end{pmatrix} \qquad cgload2 = \begin{pmatrix} \mathbf{0.00} \\ \mathbf{0.00} \\ \mathbf{0.00} \end{pmatrix} \cdot in$$

Center of gravity of bolt group

$$xcg2 := \frac{\sum_s x2_s}{rows(x2)} \quad xcg2 = \mathbf{0.50} \cdot in \qquad ycg2 := \frac{\sum_s y2_s}{rows(y2)} \quad ycg2 = -\mathbf{0.77} \cdot in \qquad zcg2 := \frac{\sum_s z2_s}{rows(z2)} \quad zcg2 = \mathbf{0.00} \cdot in$$

$$cg_{bolt2} := \begin{pmatrix} xcg2 \\ ycg2 \\ zcg2 \end{pmatrix} \qquad cg_{bolt2} = \begin{pmatrix} \mathbf{0.50} \\ -\mathbf{0.77} \\ \mathbf{0.00} \end{pmatrix} \cdot in$$

Note Since the z direction is into the plate the loads are shared equally between the bolts. However, due to a failure in bolt 1, the x and y directions in the bolt pattern are unsymmetric and have a offset from the center of gravity.

Load Vector

$$r_{load2} := cgload2 - cg_{bolt2} \qquad r_{load2} = \begin{pmatrix} -\mathbf{0.50} \\ \mathbf{0.77} \\ \mathbf{0.00} \end{pmatrix} \cdot in$$

Distance from CG of Bolts to Individual Bolts for shear calculations

$$r2_s := \sqrt{(x2_s - xcg2)^2 + (y2_s - ycg2)^2} \qquad r2_s = \begin{pmatrix} \mathbf{2.525} \\ \mathbf{3.241} \\ \mathbf{1.837} \end{pmatrix} \cdot in$$

Reading database file for bolted joint

$ID2 := \mathbf{0}$ $\quad LC2 := \mathbf{0}$ $\quad M2 := \mathbf{0}$

$data := READPRN(\text{"boltsAftPlatform.txt"})$

$q := \mathbf{1} .. rows(data)$

$num_bolts2 := rows(bolt2)$

Loads from 2-06 loads model

Shear in X axis $Fx2_q := -data_{q,\mathbf{3}} \cdot lbf$

Moment about X axis $Mx2_q := -data_{q,\mathbf{6}} \cdot in \cdot lbf$

Shear in Y axis $Fy2_q := -data_{q,\mathbf{4}} \cdot lbf$

Moment about Y axis $My2_q := -data_{q,\mathbf{7}} \cdot in \cdot lbf$

Axial Load $Fz2_q := -data_{q,\mathbf{5}} \cdot lbf$

Torsion $Mz2_q := -data_{q,\mathbf{8}} \cdot in \cdot lbf$

Element Identification $ID2_q := data_{q,\mathbf{1}}$

$ID2_q := ID2_q \cdot \mathbf{1000} + \mathbf{1}$ Counter for number of bolts in pattern

Load Case Number $LC2_q := data_{q,\mathbf{2}}$

Applied Bending Moment at Bolts $M2_q := \mathbf{0} \cdot in \cdot lbf$

Format of Output File

The stack command below is used to stack the element identifications (ID2) and load cases (LC2) in ascending order per bolt. See the array example above for explanation.
Note bolt number 1 is not included.

$ID2 := stack(ID2 + \mathbf{1}, ID2 + \mathbf{2}, ID2 + \mathbf{3})$

$LC2 := stack(LC2, LC2, LC2)$

Moment Distribution

$$M_{tot2}^{\langle q \rangle} := \begin{pmatrix} Mx2_q \\ My2_q \\ Mz2_q \end{pmatrix} + r_{load2} \times \begin{pmatrix} Fx2_q \\ Fy2_q \\ Fz2_q \end{pmatrix}$$

Use the cross-product to determine the additional moments acting on the fasteners.

$Mx_boltcg2_q := M_{tot2_{\mathbf{1},q}}$ $My_boltcg2_q := M_{tot2_{\mathbf{2},q}}$ $Mz_boltcg2_q := M_{tot2_{\mathbf{3},q}}$

Tension on bolts

$$Ftdirect2_{s,q} := \frac{Fz2_q}{num_bolts2}$$

Direct tensile load calculation

$$Fmx2_{s,q} := \begin{cases} \mathbf{0} \cdot lbf & \text{if } (y2_s - ycg2) = \mathbf{0} \cdot in \\ \dfrac{[Mx_boltcg2_q \cdot (y2_s - ycg2)] At2_s}{\sum_s \left[(y2_s - ycg2)^{\mathbf{2}} \cdot At2_s \right]} & \end{cases}$$

$$Fmy2_{s,q} := \begin{cases} \mathbf{0} \cdot lbf & \text{if } (x2_s - xcg2) = \mathbf{0} \cdot in \\ \dfrac{-[My_boltcg2_q \cdot (x2_s - xcg2)] \cdot At2_s}{\sum_s \left[(x2_s - xcg2)^{\mathbf{2}} \cdot At2_s \right]} & \end{cases}$$

$Ft2_{s,q} := Ftdirect2_{s,q} + Fmx2_{s,q} + Fmy2_{s,q}$ Total Tensile load

Shear on bolts

Secondary shear on bolts $Fs2_{s,q} := \dfrac{Mz_boltcg2_q \cdot r2_s \cdot As2_s}{\sum_s \left[(r2_s)^2 \cdot (As2_s) \right]}$

$u_s := \mathrm{atan2}(x2_s - xcg2, y2_s - ycg2)$

Shear $Sx := 0$ $Sy := 0$

$Sy_{s,q} := \sin\left(\frac{\beta}{2} - u_s\right) \cdot Fs2_{s,q}$ $Sx_{s,q} := -\cos\left(\frac{\beta}{2} - u_s\right) \cdot Fs2_{s,q}$

$u_s =$

-142.4
72
-57

$\cdot deg$

Loads of first case

$Sx^{\langle 1 \rangle} = \begin{pmatrix} 593.79 \\ -1187.58 \\ 593.79 \end{pmatrix} lbf$ $Sy^{\langle 1 \rangle} = \begin{pmatrix} -770.49 \\ 385.24 \\ 385.24 \end{pmatrix} lbf$

$Fstot2_{s,q} := \sqrt{\left(Sx_{s,q} + \frac{Fx_q}{2}\right)^2 + \left(Sy_{s,q} + \frac{Fy_q}{2}\right)^2}$

$\max(Fstot2) = 1739.85\, lbf$

Assume that Fx and Fy are shared by only 2 bolts.

$\min(Fstot2) = 0.36\, lbf$

The stack commands below are used to stack applied axial load (P2), applied shear load (V2), and applied moment (M2) in ascending order per bolt. These loads are put into an array with the element/bolt number and load case number from above. See the "Output2" file below.
Note there are only 3 bolts, since bolt number 1 is not included.

$P2 := \mathrm{stack}\left[(Ft2^T)^{\langle 1 \rangle}, (Ft2^T)^{\langle 2 \rangle}, (Ft2^T)^{\langle 3 \rangle} \right]$

$V2 := \mathrm{stack}\left[(Fstot2^T)^{\langle 1 \rangle}, (Fstot2^T)^{\langle 2 \rangle}, (Fstot2^T)^{\langle 3 \rangle} \right]$

$M2 := \mathrm{stack}(M2, M2, M2)$

The "Output2" file below outputs an array from left to right starting with the element identification (ID2), Load case number (LC2), applied load on the bolt (P2), applied shear on the bolt (V2), and applied moment on the bolt (M2). See the output array example above. The array is written to a text file.

$Output2 := \mathrm{augment}\left(ID2, LC2, \frac{P2}{lbf}, \frac{V2}{lbf}, \frac{M2}{in \cdot lbf}\right)$

Note Since the ID2 and LC2 numbers are dimensionless, the P2, V2, and M2 values are divided by their units in order to make the array dimensionless.

Size of the "Output2" Array $\mathrm{rows}(Output2) = 1536$

(3 bolts x 256 load cases) x 2 joint = 1536 rows

$\mathrm{WRITEPRN}(\text{"output_aftbrkpas_r5_onorbit_fs4.txt"}) := Output2$

Bolt Fail-safe Results

The array from the text file above is read

data_fs := READPRN(**"output_aftbrkpas_r5_onorbit_fs4.txt"**) s := **1** .. rows(data_fs)

Fail-safe Loads

Applied tensile load $P_FS_s := data_fs_{s,\mathbf{3}} \cdot lbf$ $ID_FS_s := data_fs_{s,\mathbf{1}}$

Applied shear load $V_FS_s := data_fs_{s,\mathbf{4}} \cdot lbf$ $LC_FS_s := data_fs_{s,\mathbf{2}}$

Applied bending moment $M_FS_s := data_fs_{s,\mathbf{5}} \cdot in \cdot lbf$

Fail-safe Factors of Safety

Ultimate SFu_FS := **1.0**

Joint Separation SFsep_FS := **1.0**

Prepared By	B. Dyer	5/21/07	Engineering and Science Contract Group *Structural Analysis Section*	File Name Aft_PAS_r5.xmcd
Revised By	Kent Peters	5/6/09		
Checked By	C. Bala			Drawing No. SGG39135873
Title	**Bolts from PAS Aft Bracket to PAS Platform**			

This file uses the calculations shown in \\escfil02\2i11_mathcad\8307_bolts\multi_bolt_stiffness_nut_FS_RevC

Fail-Safe Stiffness File

Bolt Fail-safe Load data

Joint separation load	max(Psep_FS) = **4876.276** lbf	max(P_FS) = **4876.276** lbf
Max bolt load (ultimate)	max(Pb_FS) = **14246.9** lbf	max(V_FS) = **1739.85** lbf

Summary of fail-safe Margins Removing Bolt 1

Joint separation	$MS_minFS_{1,1}$ = **0.23**	Total Thread shear Ult	$MS_minFS_{5,1}$ = **0.39**
Direct Tension Ultimate	$MS_minFS_{2,1}$ = **1.82**	Shear Ultimate	$MS_minFS_{6,1}$ = **5.36**
Total Tension Ultimate	$MS_minFS_{3,1}$ = **0.11**	Bending Ultimate	$MS_minFS_{7,1}$ = **10.00**
Direct Thread shear Ultimate	$MS_minFS_{4,1}$ = **2.53**	Combined shear, tension and bending ultimate	$MS_minFS_{8,1}$ = **0.11**

Determination of the smallest fail-safe margin of safety for the bolt, and the failure mode

MSbolt_FS := min(MS_FS)

MSbolt_FS = **0.11**	Failure_Mode_FS = **"Combined Shear Tension Bending Ultimate"**
MS_min_ID = **710009003**	Element Identification (710009) and Bolt Number (3) for Minimum Margin
MS_min_LC = **5056**	Load Case Number for Minimum Margin
MS_min_P = **4876.3**	Applied Tensile Load for Minimum Margin
MS_min_V = **1546.5**	Applied Shear Load for Minimum Margin
MS_min_M = **0**	Applied Bending Moment for Minimum Margin

4.12.7.2 Aft Brackets to PAS Platform Shear Bolt Analysis

Section 4.12.7.2 PAS Aft Brackets to PAS Platform - Shear Bolt

CHECK Shear Bolt (NAS1160-6-30, .375-24 x 2.482L, CRES A286, 160 KSI), Washer (NAS1587-6C, C-Sink, .375 x .078 THK, CRES), Nut (NAS1805-6, .375-24, CRES A286, 180 KSI)

data := READPRN("**output_aftbrkpas_r5_onorbit.txt**")

s := **1** .. rows(data)

Flange 1: **Aft Brackets**
Part number: SDG39135814
Material: 7050-T7451, 14.556x12.052x7.501, BMS-7-323C

Flange 2: **PAS Platform**
Part number: SDG39135817
Material: 7050-T7451, 44.82x45.40x2.75, BMS-7-323C

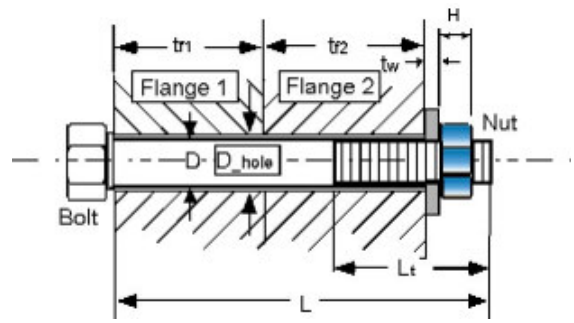

Loads

ele1 := **710009002** ele2 := **710010004**

Applied tensile load

$$P := \left| \begin{array}{l} \text{for } s3 \in s \\ \quad \text{if } data_{s3,1} = ele1 \vee data_{s3,1} = ele2 \\ \quad\quad \left| \begin{array}{l} s2 \leftarrow s2 + 1 \\ P2_{s2} \leftarrow data_{s3,3} \cdot lbf \end{array} \right. \\ P2 \end{array} \right.$$

Applied bending moment

$$M := \left| \begin{array}{l} \text{for } s3 \in s \\ \quad \text{if } data_{s3,1} = ele1 \vee data_{s3,1} = ele2 \\ \quad\quad \left| \begin{array}{l} s2 \leftarrow s2 + 1 \\ P2_{s2} \leftarrow data_{s3,5} \cdot in \cdot lbf \end{array} \right. \\ P2 \end{array} \right.$$

Applied shear load

$$V := \left| \begin{array}{l} \text{for } s3 \in s \\ \quad \text{if } data_{s3,1} = ele1 \vee data_{s3,1} = ele2 \\ \quad\quad \left| \begin{array}{l} s2 \leftarrow s2 + 1 \\ P2_{s2} \leftarrow data_{s3,4} \cdot lbf \end{array} \right. \\ P2 \end{array} \right.$$

$$ID := \left| \begin{array}{l} \text{for } s3 \in s \\ \quad \text{if } data_{s3,1} = ele1 \vee data_{s3,1} = ele2 \\ \quad\quad \left| \begin{array}{l} s2 \leftarrow s2 + 1 \\ P2_{s2} \leftarrow data_{s3,1} \end{array} \right. \\ P2 \end{array} \right.$$

$$LC := \left| \begin{array}{l} \text{for } s3 \in s \\ \quad \text{if } data_{s3,1} = ele1 \vee data_{s3,1} = ele2 \\ \quad\quad \left| \begin{array}{l} s2 \leftarrow s2 + 1 \\ P2_{s2} \leftarrow data_{s3,2} \end{array} \right. \\ P2 \end{array} \right.$$

$s := 1 .. rows(ID)$

$rows(ID) = 512.00$ $\qquad \dfrac{384}{64 \cdot 3} = 2.00$

Temperature data

Assembly	$Temp_initial := 70 \cdot deg$
Maximum	$Temp_max := 151 \cdot deg$
Minimum	$Temp_min := -43 \cdot deg$

Factors of Safety

Ultimate	$SFu := 2.0$	Yield	$SFy := 1.25$
Joint Separation	$SFsep := 1.2$	Fitting factor	$FF := 1.15$

Prepared By	B. Dyer	5/21/07	Engineering and Science Contract Group *Structural Analysis Section*	File Name Aft_PAS_Shear.xmcd
Revised By	Kent Peters	5/12/09		
Checked By	C. Bala			Drawing No. SGG39135873
Title	Shear Bolt from PAS Aft Brackets to PAS Platform			

Bolt and Nut Data

Nominal diameter of bolt $D := \mathbf{.375} \cdot in$

Reduced dia of shear bolt $Dnew := \mathbf{0.306} \cdot in$

Shear Bolt Shank Diameter $Dshank := \mathbf{0.425} \cdot in$

GRIP Length of Bolt $GRIP := (\mathbf{30}) \cdot (\mathbf{0.0625} \cdot in)$

Total length of bolt $L := GRIP + \mathbf{0.607} \cdot in$

Threaded length $Lt := \mathbf{2.482} \cdot in - \mathbf{1.885} \cdot in - \mathbf{.083} \cdot in$

Bolt head dia. across flats $dw := \mathbf{0.554} \cdot in$ (used only if there is no washer)

Number of threads/inch $Nt := \mathbf{24} \cdot \frac{\mathbf{1}}{in}$

Height of nut $H := \mathbf{0.375} \cdot in$

This file uses the calculations shown in \\escfil02\2i11_mathcad\8307_bolts\thread_data.mcd

Washer Data

Thickness of washers (2X) $tw := \mathbf{0.156} \cdot in$

Outer Diameter of washer $Dw := \mathbf{0.687} in$

Inner Diameter of washer $Dwi := \mathbf{0.378} \cdot in$

Note: If there is no washer tw, Dw and Dwi should be zero

Flange data

Thickness of flange 1 $tf1 := \mathbf{.750} \cdot in - \mathbf{.400} \cdot in$ (Height minus depth of recess)

Thickness of flange 2 $tf2 := \mathbf{2.75} \cdot in - \mathbf{1.25} \cdot in$

Diameter of hole $D_hole := \mathbf{0.428} \cdot in$

Material Property Data

Bolt

Temperature correction factor for bolt strength ultimate $TSu_bolt := \mathbf{0.96}$

Yield $TSy_bolt := \mathbf{0.96}$

Bolt ultimate tensile allowable stress $Ftu_bolt := \mathbf{160000} \cdot psi$

Bolt ultimate shear allowable stress $Fsu_bolt := \mathbf{0.6} \cdot Ftu_bolt$

Bolt yield Tensile allowable stress $Fty_bolt := \mathbf{120000} \cdot psi$

Temperature correction factor for bolt modulus $TE_bolt := \mathbf{0.96}$

Modulus of elasticity of bolt $E_bolt := \left(\mathbf{29.1} \cdot \mathbf{10}^{\mathbf{6}} \cdot psi\right)$

Thermal coeffecient for bolt $\beta_bolt_hot := \mathbf{9.1} \cdot \mathbf{10}^{-\mathbf{6}} \cdot \frac{\frac{in}{in}}{deg}$

$\beta_bolt_cold := \mathbf{8.7} \cdot \mathbf{10}^{-\mathbf{6}} \cdot \frac{\frac{in}{in}}{deg}$

Nut

Temperature correction factor for nut strength $TS_nut := \mathbf{0.96}$

Ultimate tensile allowable stress $Ftu_nut := \mathbf{180000} \cdot psi$

Ultimate Shear allowable stress: $Fsu_nut := \mathbf{0.6} \cdot Ftu_nut$

Ultimate axial strength of nut $Ptu_nut := \mathbf{16488} \cdot lbf$

(180/125=1.44, 11450*1.44=16488, Ref.NAS1291)

Washer

Temperature correction factor for washer modulus $TE_washer := \mathbf{.96}$

Modulus of elasticity of washer: $E_washer := \left(\mathbf{29.1} \cdot \mathbf{10}^{\mathbf{6}} \cdot psi\right)$

Flanges

Stiffness of the joint depends upon number of members in the grip of the fasteners, Modulus of elasticity of these members, and diameters of the bolt and the washer.

Temperature correction factor for flange 1 $Tf1E := \mathbf{.98}$ (modulus)

Temperature correction factor for flange 2 $Tf2E := \mathbf{.98}$

Modulus of elasticity for the parts in the joint $E_flange1 := \left(\mathbf{10.3} \cdot \mathbf{10}^{\mathbf{6}} \cdot psi\right)$ $E_flange2 := \left(\mathbf{10.3} \cdot \mathbf{10}^{\mathbf{6}} \cdot psi\right)$

Coefficient of thermal expansion for flanges

$\beta_flange1_hot := \mathbf{12.8} \cdot \mathbf{10}^{-\mathbf{6}} \cdot \frac{\frac{in}{in}}{deg}$ $\beta_flange2_hot := \mathbf{12.8} \cdot \mathbf{10}^{-\mathbf{6}} \cdot \frac{\frac{in}{in}}{deg}$

$\beta_flange1_cold := \mathbf{12.1} \cdot \mathbf{10}^{-\mathbf{6}} \cdot \frac{\frac{in}{in}}{deg}$ $\beta_flange2_cold := \mathbf{12.1} \cdot \mathbf{10}^{-\mathbf{6}} \cdot \frac{\frac{in}{in}}{deg}$

Torque/Preload data

Maximum torque $Tmax := \mathbf{342} \cdot in \cdot lbf$ ***59% of Yield***

Minimum torque $Tmin := \mathbf{291} \cdot in \cdot lbf$ ***85% of Max***

Torque coefficient $k := \mathbf{0.15}$

Loading plane factor $n := \mathbf{0.5}$

Preload Uncertainty $u := \mathbf{0.25}$

Prepared By	B. Dyer	5/21/07	Engineering and Science Contract Group *Structural Analysis Section*	File Name Aft_PAS_Shear.xmcd
Revised By	Kent Peters	5/12/09		
Checked By	C. Bala			Drawing No. SGG39135873
Title	Shear Bolt from PAS Aft Brackets to PAS Platform			

Bolt Load data

Bolt/joint stiffness factor	$= \mathbf{0.343}$	Preload due to temperature	Pthr_pos $= \mathbf{711.2} \cdot lbf$
Max. preload	PLDmax $= \mathbf{8311.2} \cdot lbf$		Pthr_neg $= -\mathbf{911.8} \cdot lbf$
Min. preload	PLDmin $= \mathbf{2588.2} \cdot lbf$	Uncertainty factor	$u = \mathbf{0.25}$
Joint separation load	max(Psep) $= \mathbf{376.427} \cdot lbf$	Torque coefficient	$k = \mathbf{0.15}$
Max. load on the bolt (ultimate)	max(Pb) $= \mathbf{8434.8} \cdot lbf$	Loading plane factor	$n = \mathbf{0.50}$
Max. load on the bolt (yield)	max(Pby) $= \mathbf{8388.5} \cdot lbf$	Thread pullout strength required to develop full strength of bolt	PAs $= \mathbf{15838.4} \cdot lbf$
Bolt ultimate tensile strength	PAt $= \mathbf{13198.6} \cdot lbf$	Nut ultimate tensile strength	Ptu_nut $= \mathbf{15828.5} \cdot lbf$

Summary of Margins for bolt:

Length_check = **"Bolt length is sufficient"**

Joint separation	$MS_min_{1,1} = \mathbf{6.22}$	Direct Thread shear Ultimate	$MS_min_{6,1} = \mathbf{20.95}$
Direct Tension Ultimate	$MS_min_{2,1} = \mathbf{14.66}$	Total Thread shear Ultimate	$MS_min_{7,1} = \mathbf{0.88}$
Direct Tension Yield	$MS_min_{3,1} = \mathbf{17.79}$	Shear Ultimate	$MS_min_{8,1} = \mathbf{2.98}$
Total Tension Ultimate	$MS_min_{4,1} = \mathbf{0.34}$	Bending Ultimate	$MS_min_{9,1} = \mathbf{1000}$
Total Tension Yield	$MS_min_{5,1} = \mathbf{0.01}$	Combined shear, tension and bending ultimate	$MS_min_{10,1} = \mathbf{0.34}$

Determination of the smallest margin of safety for the bolt, and the failure mode:

MSbolt := min(MS)

MSbolt = **0.01**	Failure_Mode = **"Total Tension Yield"**
MS_min_ID = **710010004**	Element Identification (710010) and Bolt Number (4) for Minimum Margin
MS_min_LC = **6053**	Load Case Number for Minimum Margin
MS_min_P = **313.7**	Applied Tensile Load for Minimum Margin
MS_min_V = **208.7**	Applied Shear Load for Minimum Margin
MS_min_M = **0**	Applied Bending Moment for Minimum Margin

Fail-safe Analysis

Fail-safe Loads

data_fs1 := READPRN("**output_aftbrkpas_r5_onorbit_fs1.txt**")

data_fs2 := READPRN("**output_aftbrkpas_r5_onorbit_fs2.txt**")

data_fs3 := READPRN("**output_aftbrkpas_r5_onorbit_fs3.txt**")

data_fs4 := READPRN("**output_aftbrkpas_r5_onorbit_fs4.txt**")

data_fs := stack(data_fs1, data_fs2, data_fs3, data_fs4) rows(data_fs) = **6144.00**

s := **1** .. rows(data_fs) rows(data_fs1) = **1536.00**

Fail-safe Factors of Safety

Ultimate SFu_FS := **1.0**

Joint Separation SFsep_FS := **1.0**

ele1 := **710009002** ele2 := **710010004**

```
P_FS := | for s3 ∈ s
        |   if data_fs[s3,1] = ele1 ∨ data_fs[s3,1] = ele2
        |     | s2 ← s2 + 1
        |     | P2[s2] ← data_fs[s3,3]·lbf
        | P2
```

```
ID_FS := | for s3 ∈ s
         |   if data_fs[s3,1] = ele1 ∨ data_fs[s3,1] = ele2
         |     | s2 ← s2 + 1
         |     | P2[s2] ← data_fs[s3,1]
         | P2
```

```
M_FS := | for s3 ∈ s
        |   if data_fs[s3,1] = ele1 ∨ data_fs[s3,1] = ele2
        |     | s2 ← s2 + 1
        |     | P2[s2] ← data_fs[s3,5]·in·lbf
        | P2
```

```
LC_FS := | for s3 ∈ s
         |   if data_fs[s3,1] = ele1 ∨ data_fs[s3,1] = ele2
         |     | s2 ← s2 + 1
         |     | P2[s2] ← data_fs[s3,2]
         | P2
```

```
V_FS := | for s3 ∈ s
        |   if data_fs[s3,1] = ele1 ∨ data_fs[s3,1] = ele2
        |     | s2 ← s2 + 1
        |     | P2[s2] ← data_fs[s3,4]·lbf
        | P2
```

$s := 1 .. \text{rows}(ID_FS)$

$\text{rows}(ID_FS) = 1536.00$ $\quad \frac{384}{64 \cdot 3} = 2.00$

This file uses the calculations shown in \\escfil02\2i11_mathcad\8307_bolts\ multi_bolt_stiffness_nut_FS_RevC

Bolt Fail-safe Load data

Joint separation load $\quad \max(Psep_FS) = 565.699 \cdot lbf$

Max. load on the bolt(ultimate) $\quad \max(Pb_FS) = 8422.7 \cdot lbf$

Summary of fail-safe Margins for bolt

Joint separation	$MS_minFS_{1,1} = 3.80$	Total Thread shear Ultimate	$MS_minFS_{5,1} = 0.88$
Direct Tension Ultimate	$MS_minFS_{2,1} = 19.29$	Shear Ultimate	$MS_minFS_{6,1} = 4.52$
Total Tension Ultimate	$MS_minFS_{3,1} = 0.57$	Bending Ultimate	$MS_minFS_{7,1} = 10.00$
Direct Thread shear Ultimate	$MS_minFS_{4,1} = 23.35$	Combined shear, tension and bending ultimate	$MS_minFS_{8,1} = 0.57$

Determination of the smallest fail-safe margin of safety for the bolt, and the failure mode

$MSbolt_FS := \min(MS_FS)$

$MSbolt_FS = 0.57$	Failure_Mode_FS = **"Combined Shear Tension Bending Ultimate"**
$MS_min_ID = 710010004$	Element Identification (710010) and Bolt Number (4) for Minimum Margin
$MS_min_LC = 6055$	Load Case Number for Minimum Margin
$MS_min_P = 565.7$	Applied Tensile Load for Minimum Margin
$MS_min_V = 258.4$	Applied Shear Load for Minimum Margin
$MS_min_M = 0$	Applied Bending Moment for Minimum Margin

4.12.8 BCS Avionics Bracket to PAS Platform Bolt Analysis

4.12.8 BCS Avionics Bracket to PAS Platform Bolt Analysis

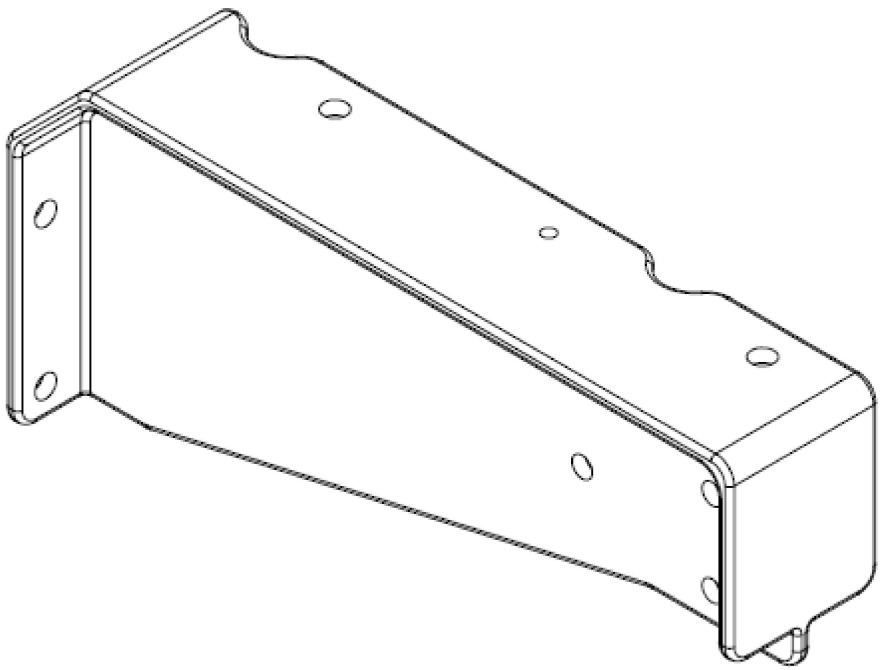

The maximum camera weight: $camera := 25 \cdot lb$

The maximum load factor for lift off/landing: $factor := 5.9$

$acc := factor \cdot 32.174 \cdot \frac{ft}{sec^2}$ $\quad cameraforce := acc \cdot camera \quad cameraforce = 147.5 \cdot lbf$

$length := 9.75 \cdot in$ (conservative)

$moment := length \cdot cameraforce \quad moment = 1438.1 \cdot in \cdot lbf$

Prepared By	Name	Date	Engineering and Science Contract Group	File Name
	Brent Dyer	06/09/03		BCS_pltfrm.mcd
Checked By	C. Bala		*Structural Analysis Section*	Drawing No. SDG39135815
Title	BCS Avionics Bracket to PAS Platform Bolt Analysis			

Use bolt pattern on one bracket only. Very conservative

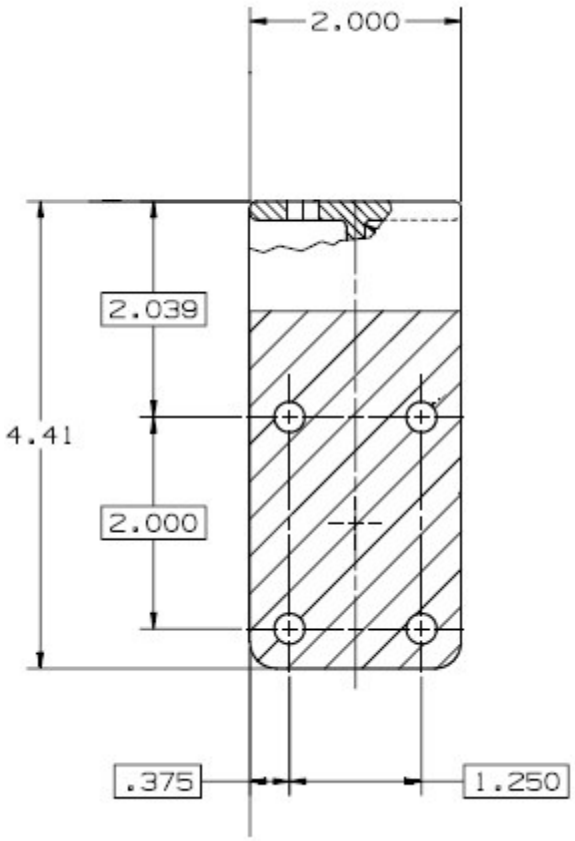

$min_couple_dis := 1.25 \cdot in$

$$Ften := \frac{cameraforce}{4} + \frac{\frac{moment}{min_couple_dis}}{2}$$

$Ften = 612.1 \cdot lbf$

$$Fshear := \frac{cameraforce}{4}$$

$Fshear = 36.9 \cdot lbf$

$P := Ften$ Applied tensile load

$V := Fshear$ Applied shear load

Prepared By	Name	Date	Engineering and Science Contract Group	File Name
	Brent Dyer	06/09/03		BCS_pltfrm.mcd
Checked By	C. Bala		*Structural Analysis Section*	Draw ing No. SDG39135815
Title	BCS Avionics Bracket to PAS Platform Bolt Analysis			

CHECK BOLTS (NAS1351N4-10 bolts 0.250-28UNRF-3A, Material-A-286), Insert MS21209F415L , Washer NAS1149E0432R

Flange 1: BCS Avionics Bracket
Part number: SDG39135822
Material: 7075-T7351

Flange 2: PAS PLatform
Part number: SDG39135817
Material: 7050-T7451

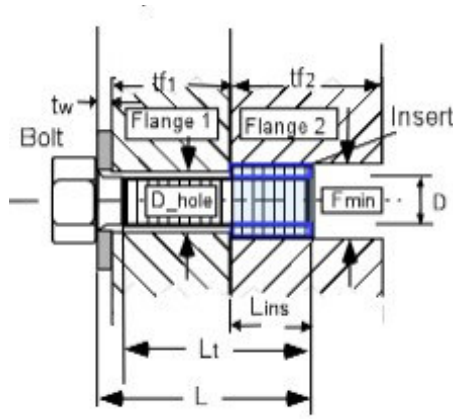

Loads - on-orbit loads

Applied tensile load $P = 612.1 \cdot lbf$

Applied shear load $V = 36.9 \cdot lbf$

Applied bending moment $M := 0 \cdot in \cdot lbf$

Factors of Safety

Ultimate $SFu := 2.0$ Yield $SFy := 1.25$

Joint Separation $SFsep := 1.2$ Fitting factor $FF := 1.15$

Temperature data
(Ref. Appendix C2)

Assembly $Temp_initial := 70 \cdot deg$

Maximum $Temp_max := 151 \cdot deg$

Minimum $Temp_min := -28 \cdot deg$

Bolt and Insert Data

Nominal diameter of bolt $D := 0.250 \cdot in$

Number of threads/inch $Nt := 28 \cdot \frac{1}{in}$

Total length of bolt $L := .625 \cdot in$

Length of insert $Lins := 0.375 \cdot in$

Threaded length $Lt := 0.625 \cdot in$

Min. external diameter of insert $Fmin := 0.306 \cdot in$

(If bolt is fully threaded, input Lt = L)

Depth of recess for insert $lr := 0.02 \cdot in$

This file uses the calculations shown in \\escfil02\2i11_mathcad\8307_bolts\thread_data.mcd

Tue Feb 15 10:38:17 AM 2005

Washer Data

Thickness of washer $tw := 0.032 \cdot in$

Outer Diameter of washer $Dw := .500in$

Inner Diameter of washer $Dwi := 0.265 \cdot in$

Bolt head dia. across flats $dw := 0.365 \cdot in$

Flange data

Thickness of flange 1 (Ref. SDG39135822) $tf1 := .180 \cdot in$

Thickness of flange 2 (Ref. SDG39135817) $tf2 := .375in$ (insert length)

Diameter of hole $D_hole := 0.291 \cdot in$

(used only if there is no washer)

Material Property Data

Bolt

Temperature correction factor for bolt strength ultimate $TSu_bolt := .97$ yield $TSy_bolt := .97$
(Ref. MIL-HDBK-5J, fig. 6.2.1.1.1)

Bolt ultimate tensile allowable stress $Ftu_bolt := 160000 \cdot psi$

Bolt ultimate shear allowable stress $Fsu_bolt := 0.6 \cdot Ftu_bolt$

Bolt yield tensile allowable $Fty_bolt := 120000 \cdot psi$

Temperature correction factor for bolt modulus $TE_bolt := .98$
(Ref. MIL-HDBK-5J, fig. 6.2.1.1.4(a))

Modulus of elasticity of bolt $E_bolt := \left(29.1 \cdot 10^{6} \cdot psi\right)$
(Ref. MIL-HDBK-5J, table 6.2.1.0(b))

Thermal coeffecient for bolt: $\beta_bolt_hot := 9.1 \cdot 10^{-6} \cdot \frac{\frac{in}{in}}{deg}$
(Ref. MIL-HDBK-5J, fig. 6.

$\beta_bolt_cold := 8.7 \cdot 10^{-6} \cdot \frac{\frac{in}{in}}{deg}$

Insert

Temperature correction factor for insert strength $TS_ins := .98$
(Ref. MIL-HDBK-5J, fig. 6.2.1.1.1)

Ultimate tensile allowable stress $Ftu_ins := 150000 \cdot psi$

Ultimate shear allowable stress $Fsu_ins := 0.6 \cdot Ftu_ins$

Washer

Temperature correction factor for washer modulus $TE_washer := .98$ (Ref. MIL-HDBK-5J, fig. 6.2.1.1.1)

Modulus of elasticity of washer $E_washer := \left(29.1 \cdot 10^{6} \cdot psi\right)$ (Ref. MIL-HDBK-5J, table 6.2.1.0(b))

Flanges

Stiffness of the joint depends upon number of members in the grip of the fasteners,
Modulus of elasticity of these members, and diameters of the bolt and the washer.

Temperature correction factor for flange 1 $Tf1E := .98$ (modulus) $Tf2s := .94$ (strength)
(Ref. MIL-HDBK-5J, fig. 3.7.6.1.4)

Temperature correction factor for flange 2 $Tf2E := .98$ (modulus) $Fsu_f2 := 44000 \cdot psi$
(Ref. Appendix C9)

Modulus of elasticity for the parts in the joint $E_flange1 := \left(10.3 \cdot 10^{6} \cdot psi\right)$ $E_flange2 := \left(10.3 \cdot 10^{6} \cdot psi\right)$

Coefficient of thermal expansion for flanges $\beta_flange1_hot := 12.8 \cdot 10^{-6} \cdot \frac{\frac{in}{in}}{deg}$ $\beta_flange2_hot := 12.6 \cdot 10^{-6} \cdot \frac{\frac{in}{in}}{deg}$
(Ref. MIL-HDBK-5J, fig. 3.7.6.0 and Appendix C9)

$\beta_flange1_cold := 12.1 \cdot 10^{-6} \cdot \frac{\frac{in}{in}}{deg}$ $\beta_flange2_cold := 11.9 \cdot 10^{-6} \cdot \frac{\frac{in}{in}}{deg}$

Torque/Preload data
(Ref. SDG39135815)

Maximum torque $Tmax := 97.3 \cdot in \cdot lbf$
Minimum torque $Tmin := 82.7 \cdot in \cdot lbf$

Loading plane factor: $n := .5$

Preload Uncertainty: $u := 0.25$

Torque coefficient: $k := 0.15$

This file uses the calculations shown in \\escfil02\2i11_mathcad\8307_bolts\bolt_stiffness_insert_RevC

Mon Feb 14 12:49:24 2005

Bolt Load data

Bolt/joint stiffness factor	$= 0.31$	Preload due to temperature	$Pthr_pos = 274.5 \cdot lbf$
Max. preload	$PLDmax = 3517.8 \cdot lbf$		$Pthr_neg = -304.1 \cdot lbf$
Min. preload	$PLDmin = 1187.7 \cdot lbf$	Uncertainty factor	$u = 0.25$
Joint separation load	$Psep = 734.549 \cdot lbf$	Torque coefficient	$k = 0.15$
Max. load on the bolt(ultimate)	$Pb = 3736.3 \cdot lbf$	Loading plane factor	$n = 0.5$
Max. load on the bolt(yield)	$Pby = 3654.4 \cdot lbf$	Thread shear pullout load of bolt or insert	$Pths = 12348.8 \cdot lbf$
Bolt ultimate tensile strength	$PAt = 5475.9 \cdot lbf$	Thread shear pullout load in parent metal	$Ppths = 7455.1 \cdot lbf$

Length_check = "Bolt length is sufficient"

Summary of Margins for bolt:

Joint separation	$MS_1 = 0.664$	Direct Thread shear Ultimate	$MS_6 = 4.3$
Direct Tension Ultimate	$MS_2 = 2.89$	Total Thread shear Ultimate	$MS_7 = 1$
Direct Tension Yield	$MS_3 = 3.67$	Shear Ultimate	$MS_8 = 34.75$
Total Tension Ultimate	$MS_4 = 0.47$	Bending Ultimate	$MS_9 = 10$
Total Tension Yield	$MS_5 = 0.124$	Combined shear, tension and bending ultimate	$MS_{10} = 0.466$

Determination of the smallest margin of safety for the bolt, and the failure mode:

$$MSbolt := \min(MS)$$

$MSbolt = 0.124$ Failure_Mode = "Total Tension Yield"

4.12.9 Vertex Bracket to Lower USS-02 Bolted Interface

Section 4.12.9 Vertex Bracket to Lower USS-02 Bolted Interface

The Vertex Bracket to Lower USS-02 Bolt Analysis is performed in the following report sections.

4.12.9.1	Vertex Bracket to Lower USS-02 Assembly
4.12.9.1	Vertex Bracket to Lower USS-02 Assembly Fail Safe

4.12.9.1 Vertex Bracket to Lower USS-02 Assembly

Section 4.12.9.1 PAS Vertex Bracket to Lower USS-02 Bolt Analysis

The AMS-02 assembly consists of one Vertex Bracket with two bolted interfaces that attach to the Lower USS-02. There are a total of 4 fasteners attaching the Vertex Bracket to the Lower USS. The fasteners are NAS1956 (180 KSI), 0.375-24 UNFJ.

size thread/in

$$bolt := \begin{pmatrix} .375 & 24 \\ .375 & 24 \end{pmatrix}$$

$$i := 1 .. rows(bolt)$$

$$N_i := bolt_{i,2} \cdot \frac{1}{in}$$ pitch of bolt

$$D_i := bolt_{i,1} \cdot in$$ bolt diameter

$$At_i := \beta \cdot \left(\frac{D_i - 0.9743 \cdot \frac{1}{N_i}}{2} \right)^2$$ Tensile Area of bolt

$$As_i := \beta \cdot \left(\frac{D_i - 1.299038 \cdot \frac{1}{N_i}}{2} \right)^2$$ Shear Area of bolt

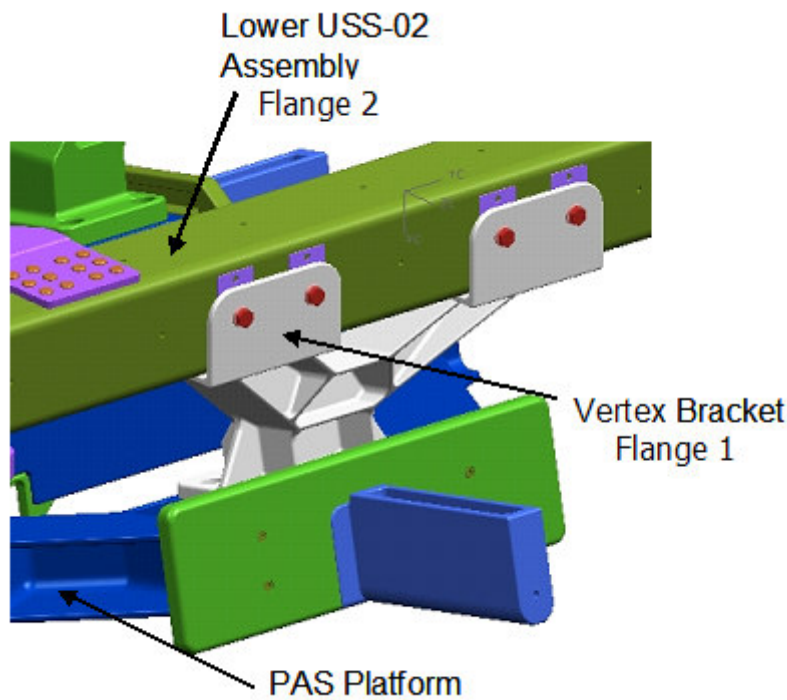

NAS1956C76H	BOLT, HEX-HEAD .375-24 UNJF-3A X 5.328L
NAS1587-6C	WASHER, C-SINK .375 X .078THK
SDG39137839-001	VERTEX BRACKET SHIM
SDG39137837-001	VERTEX BUSHING A
SDG39137838-001	VERTEX BUSHING B
SDG39137839-001	VERTEX BRACKET SHIM
NAS1587-6C	WASHER, C-SINK .375 X .078THK
NAS1805-6	NUT, SELF-LOCKING .375-24 UNJF-3B

Prepared By	Brent Dyer	5/21/07	Engineering and Science Contract Group *Structural Analysis Section*	File Name Vert_LwUSS_r5.xmcd
Revised By	Kent Peters	5/6/09		
Checked By	C. Bala			Drawing No. SDG39135817
Title	**Bolts from Vertex Bracket to Lower USS-02**			

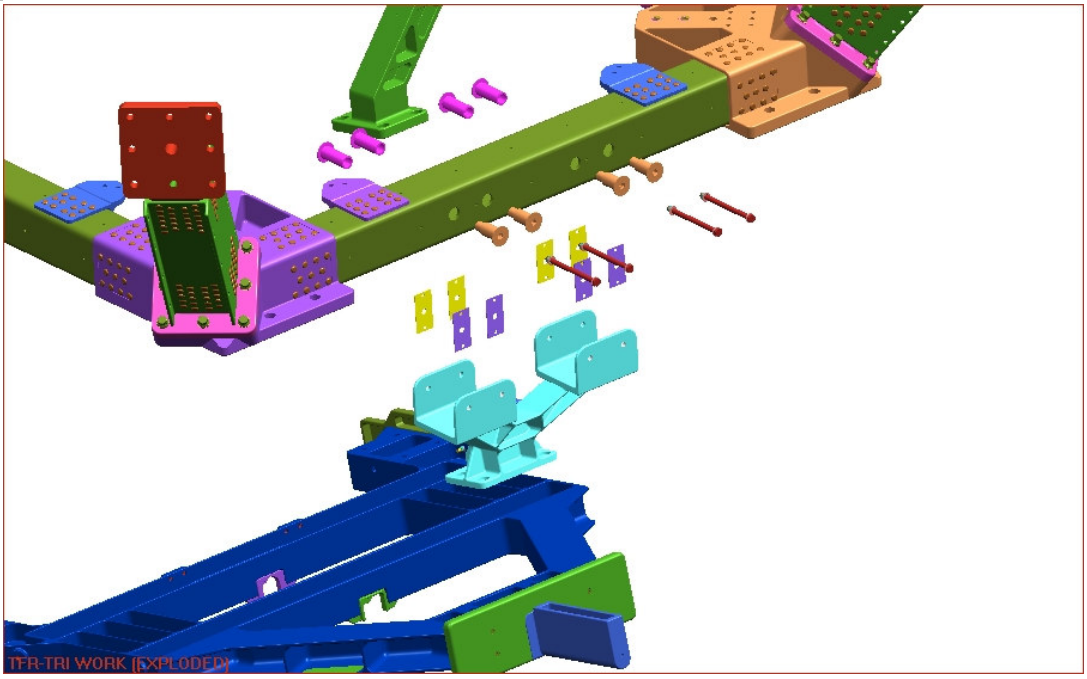

Vertex Bracket to Lower USS Assembly

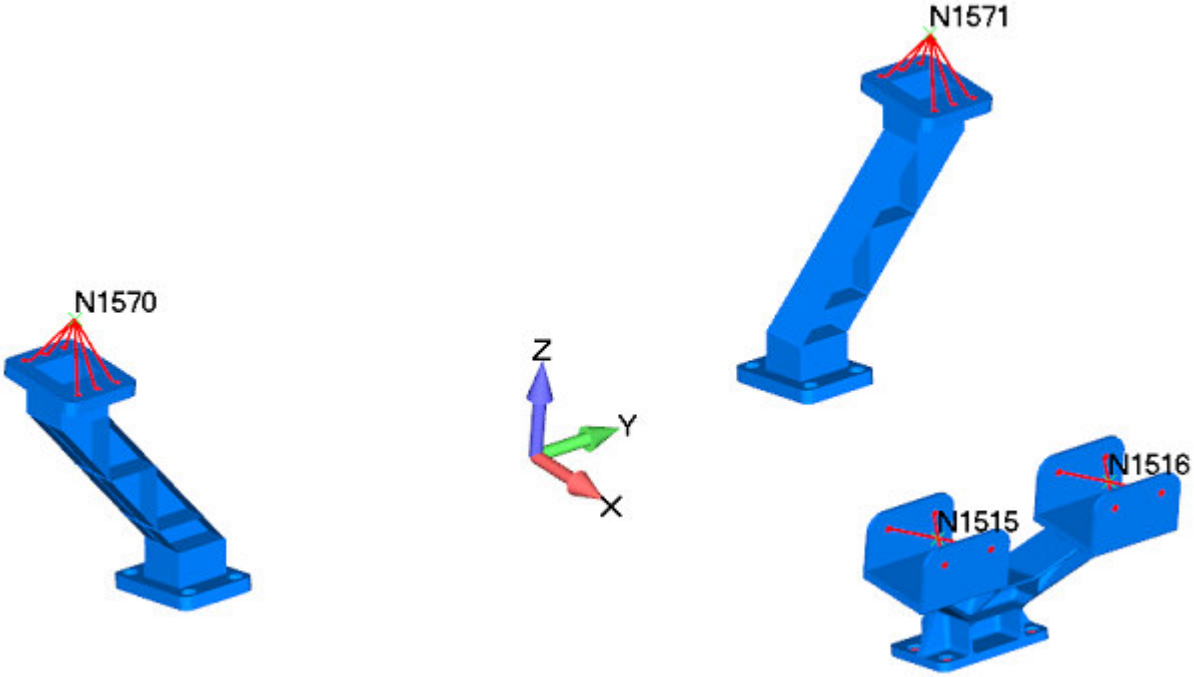

Aft and Vertex Brackets, MPC Nodes, and Definition/Output Coordinate System 0

Nodes 1515 and 1516 are in Definition Coordinate System 0. Loads are from MPC Forces at Nodes 1515 and 1516 in the Output Coordinate System 0. Analysis is also done in Global Coordinate System 0.

Note: x direction is tension. The y and z are shear.

Bolt Pattern

Bolt no. x coordinate y coordinate z co-coordinate

$$\begin{pmatrix}1\\2\end{pmatrix} \quad x := \begin{pmatrix}0.0\\0.0\end{pmatrix}\cdot in \quad y := \begin{pmatrix}-1.75\\1.75\end{pmatrix}\cdot in \quad z := \begin{pmatrix}0.0\\0.0\end{pmatrix}\cdot in$$

Location of applied forces and moments

$xforce := 0.0in \qquad yforce := 0.0in \qquad zforce := 0.0in$

$$cgload := \begin{pmatrix}xforce\\yforce\\zforce\end{pmatrix} \qquad cgload = \begin{pmatrix}0.00\\0.00\\0.00\end{pmatrix}\cdot in$$

Center of gravity of bolt group

$$xcg := \frac{\sum_i x_i}{rows(x)} \quad xcg = 0.00\cdot in \qquad ycg := \frac{\sum_i y_i}{rows(y)} \quad ycg = 0.00\cdot in \qquad zcg := \frac{\sum_i z_i}{rows(z)} \quad zcg = 0.00\cdot in$$

$$cg_{bolt} := \begin{pmatrix}xcg\\ycg\\zcg\end{pmatrix} \qquad cg_{bolt} = \begin{pmatrix}0.00\\0.00\\0.00\end{pmatrix}\cdot in$$

Note: Since the x direction is into the plate the loads are shared equally between the bolts. The bolt pattern is symmetric about the y-axis and z-axis with a zero offset from the center of gravity.

Load Vector

$$r_{load} := cgload - cg_{bolt} \qquad r_{load} = \begin{pmatrix}0.00\\0.00\\0.00\end{pmatrix}\cdot in$$

Distance from CG of Bolts to Individual Bolts for shear calculations

$$r_i := \sqrt{(z_i - zcg)^2 + (y_i - ycg)^2} \qquad r = \begin{pmatrix}1.750\\1.750\end{pmatrix}\cdot in$$

Loads model 2-06 was used to retrieve loads at the bolted interface. MPCs located at the center of the vertex brackets were post processed in NASPOST for forces and moments in the x, y, and z directions. The MPCs are located on RBE elements 1515 and 1516. These loads are read into an array and distributed out to the 2 bolts for each attachment on the vertex bracket.

Note: This joint was checked for minimum margins of safety for on-orbit, liftoff, abort landing and berthing load cases.

Reading database file for bolted joint

$data := READPRN(\text{"boltsVertUSS.txt"})$

$num_bolts := rows(bolt)$

$j := 1 .. rows(data)$

Note: "boltsVertUSS.txt" is generated from NASPOST result (.LIS file) by just removing all words and comments. This file is archived along with the other analysis files, see Appendix A22.

Loads

Axial Load	$Fx_j := -data_{j,3} \cdot lbf$	Torsion	$Mx_j := -data_{j,6} \cdot in \cdot lbf$
Shear in Y axis	$Fy_j := -data_{j,4} \cdot lbf$	Moment about Y axis	$My_j := -data_{j,7} \cdot in \cdot lbf$
Shear in Z axis	$Fz_j := -data_{j,5} \cdot lbf$	Moment about Z axis	$Mz_j := -data_{j,8} \cdot in \cdot lbf$
Element Identification	$ID_j := data_{j,1}$	$ID_j := ID_j \cdot 1000 + 1$	Counter for number of bolts in pattern
Load Case Number	$LC_j := data_{j,2}$		
Applied Bending Moment at Bolts	$M_j := 0 \cdot in \cdot lbf$		

Format of Output File

The stack commands below are used to stack the element identifications (ID) and load cases (LC) in ascending order per bolt. The element ID number is located in the first column and the LC numbers in the second column.

$ID := stack(ID, ID + 1)$ $\qquad LC := stack(LC, LC)$

Moment Distribution

$$M_{tot}^{\langle j \rangle} := \begin{pmatrix} Mx_j \\ My_j \\ Mz_j \end{pmatrix} + r_{load} \times \begin{pmatrix} Fx_j \\ Fy_j \\ Fz_j \end{pmatrix}$$

Use the cross-product to determine the additional moments acting on the fasteners.

$Mx_boltcg_j := M_{tot_{1,j}}$ $\qquad My_boltcg_j := M_{tot_{2,j}}$ $\qquad Mz_boltcg_j := M_{tot_{3,j}}$

Tension in bolts

$$Ftdirect_{i,j} := \frac{Fx_j}{num_bolts}$$

$$Fmz_{i,j} := \begin{cases} 0 \cdot lbf & \text{if } (y_i - ycg) = 0 \cdot in \\ \dfrac{-\left[Mz_boltcg_j \cdot (y_i - ycg) \cdot At_i\right]}{\sum_i \left[(y_i - ycg)^2 \cdot At_i\right]} \end{cases}$$

$$Ft_{i,j} := \left|Ftdirect_{i,j}\right| + \left|Fmz_{i,j}\right|$$

Total Tensile load

Shear on bolts

Distance from cg of bolt to shear plane is +_2" this causes a shear force due to a moment about y.

Z component shear Loads

$$Fztotal_{i,j} := \left|\frac{Fz_j}{num_bolts} + \frac{Mx_boltcg_j \cdot y_i - ycg \cdot As_i}{\sum_i \left[(y_i - ycg)^2 \cdot (As_i)\right]}\right| + \left|\frac{(My_boltcg_j \cdot 2in) As_i}{\left[\sum_i \left[(2in)^2 \cdot As_i\right]\right]}\right|$$

Total shear load

$$Fstot_{i,j} := \frac{\sqrt{(Fztotal_{i,j})^2 + \left(\frac{Fy_j}{num_bolts}\right)^2}}{2}$$

Note: Each bolt has 2 shear planes. Therefore, the total shear load is divided by 2.

The stack commands below are used to stack applied axial load (P), applied shear load (V), and applied moment (M) in ascending order per bolt. These loads are put into an array with the element/bolt number and load case number from above. See the "Output" file below.

$$P := stack\left[\left(Ft^T\right)^{\langle 1 \rangle}, \left(Ft^T\right)^{\langle 2 \rangle}\right] \qquad V := stack\left[\left(Fstot^T\right)^{\langle 1 \rangle}, \left(Fstot^T\right)^{\langle 2 \rangle}\right] \qquad M := stack(M, M)$$

The "Output" file below outputs an array from left to right starting with the element identification (ID), Load case number (LC), applied load on the bolt (P), applied shear on the bolt (V), and applied moment on the bolt (M). See the output array example below. The array is then written to a text file.

$$Output := augment\left(ID, LC, \frac{P}{lbf}, \frac{V}{lbf}, \frac{M}{in \cdot lbf}\right)$$

Note: Since the ID and LC numbers are dimensionless, the P, V, and M values are divided by their units in order to make the array dimensionless.

Size of the "Output" Array: $rows(Output) = \mathbf{1024}$

(2 bolts x 256 load cases) x 2 joints = 1024 rows

WRITEPRN(**"output_vertlwuss_r5.txt"**) := Output

CHECK Bolts (NAS1956C76H 0.375-24 x 5.328L, A286, 180 KSI Tensile, 108 KSI Shear),
Washer (NAS1587-6C, CRES),
Nut (NAS1805-6, CRES 180 KSI)
Vertex Bushing A (SDG39137837, A286 Stainless, 1.50 DIA x 2.438 LG, AMS 5737)
Vertex Bushing B (SDG39137838, A286 Stainless, 1.50 DIA x 2.406 LG, AMS 5737)
Vertex Bracket Shim (SDG39137839, Shim Stock, AL ALY, 3.0 x 1.5 x .033, AMS-DTL-22499/1

Note loads must be sorted by case such that the first line is for grid 1515 and the second grid is for the grid 1516.

data := READPRN("**output_vertlwuss_r5.txt**")

s := **1** .. rows(data) rows(data) = **1024.00**

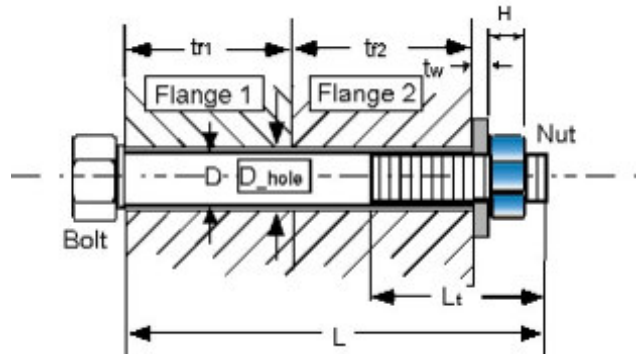

Flange 1: Vertex Bracket
Part number: SEG39135813
Material: 7050-T7451, 16.5x10.72x7.92, BMS-7-323C

Flange 2: Lower USS-02
Part number: SDG39135758
Material: 7075-T73511, 46.92 x 4 x 4, ASTM-B221

Loads

Applied tensile load $P_s := data_{s,3} \cdot lbf$

Applied shear load $V_s := data_{s,4} \cdot lbf$

Applied bending moment $M_s := data_{s,5} \cdot in \cdot lbf$

Element Identification $ID_s := data_{s,1}$

Load Case Number $LC_s := data_{s,2}$

$ID_s := ID_s \cdot 1000 + 1$

Factors of Safety

Ult SFu := **2.0** Yield SFy := **1.25**

Joint Separation SFsep := **1.2** Fitting factor FF := **1.15**

Temperature Data

Assembly Temp_initial := **70**·deg

Maximum Temp_max := **139**·deg

Minimum Temp_min := −**37**·deg

Bolt and Nut Data

Nominal diameter of bolt $D := \mathbf{.375} \cdot in$

Number of threads/inch $Nt := \mathbf{24} \cdot \frac{\mathbf{1}}{in}$

Total length of bolt $L := \mathbf{5.328} \cdot in$

Height of nut $H := \mathbf{0.375} \cdot in$

Threaded length $Lt := \mathbf{0.578} \cdot in$

(If bolt is fully threaded, input Lt = L)

This file uses the calculations shown in \\escfil02\2i11_mathcad\8307_bolts\thread_data.mcd

Washer Data

Thickness of washers $tw := \mathbf{0.156} \cdot in$

Outer Diameter of washer $Dw := \mathbf{0.687} in$

Inner Diameter of washer $Dwi := \mathbf{0.378} \cdot in$

Bolt head dia. across flats $dw := \mathbf{0.553} \cdot in$

Flange data

Thickness of flange 1 $tf1 := \mathbf{0.50} \cdot in$

Thickness of flange 2 $tf2 := \mathbf{0.50} \cdot in$

Diameter of hole $D_hole := \mathbf{0.409} \cdot in$

(used only if there is no washer)

Bushing Data

Thickness of A286 Stainless Steel bushing $tb := \mathbf{4.124} \cdot in$

Outer Diameter of A286 Stainless Steel bushing $Dbo := \mathbf{0.950} \cdot in$

Inner Diameter of A286 Stainless Steel bushing $Dbi := \mathbf{.409} \cdot in$

Material Property Data

Bolt

Temperature correction factor bolt strength ult $TSu_bolt := \mathbf{.98}$

Yield $TSy_bolt := \mathbf{.98}$

(Ref. MIL-HDBK-5J, fig. 6.2.1.1.1)

Bolt Ult tensile allowable stress $Ftu_bolt := \mathbf{180000} \cdot psi$ (Ref. NAS1956)

Bolt Ult shear allowable stress $Fsu_bolt := \mathbf{0.6} \cdot Ftu_bolt = \mathbf{108000}\, psi$

Bolt yield Tensile allowable stress $Fty_bolt := \mathbf{132353} \cdot psi$ (Ref. Appendix C10)

Temperature correction factor for bolt modulus $TE_bolt := \mathbf{.98}$ (Ref. MIL-HDBK-5J, fig. 6.2.1.1.4(a))

Modulus of elasticity of bolt $E_bolt := \left(\mathbf{29.1} \cdot \mathbf{10}^{\mathbf{6}} \cdot psi\right)$

(Ref. MIL-HDBK-5J, table 6.2.1.0(b))

Thermal coefficient for bolt
(Ref. MIL-HDBK-5J, fig. 6.2.1.0)

$u_bolt_hot := 9.1 \cdot 10^{-6} \cdot \frac{\frac{in}{in}}{deg}$ $u_bolt_cold := 8.7 \cdot 10^{-6} \cdot \frac{\frac{in}{in}}{deg}$

Nut

Temperature correction factor for nut strength $TS_nut := .98$

Ult tensile allowable stress $Ftu_nut := 180000 \cdot psi$

(Ratio 180 KSI/125 KSI = 1.44, 11450 * 1.44 = 16488, Ref. NAS1291)

Ult Shear allowable stress: $Fsu_nut := 0.6 \cdot Ftu_nut = 108000.00\ psi$

Ult axial strength of nut $Ptu_nut := 16488 \cdot lbf$

Washer

Temperature correction factor for washer modulus $TE_washer := .98$ (Ref. MIL-HDBK-5J, fig. 6.2.1.1.1)

Modulus of elasticity of washer: $E_washer := 29.1 \cdot 10^{6} \cdot psi$ (Ref. MIL-HDBK-5J, table 6.2.1.0(b))

Bushing

Temperature correction factor for bushing modulus $TE_bushing := .98$ (Ref. MIL-HDBK-5J, fig. 5.4.1.1.1)

Modulus of elasticity of bushing:
(Ref. MIL-HDBK-5J, table 5.4.1.0(c1)) $E_bushing := 29.1 \cdot 10^{6} \cdot psi$

Thermal coefficient for bushing
(Ref. MIL-HDBK-5J, fig 5.4.1.0)

$u_bushing_hot := 9.1 \cdot 10^{-6} \cdot \frac{\frac{in}{in}}{deg}$ $u_bushing_cold := 8.7 \cdot 10^{-6} \cdot \frac{\frac{in}{in}}{deg}$

Flanges

Stiffness of the joint depends upon number of members in the grip of the fasteners, Modulus of elasticity of these members, and diameters of the bolt and the washer.

Temperature correction factor for flange 1 $Tf1E := .98$ (modulus)

Temperature correction factor for flange 2 $Tf2E := .98$ (modulus)

(Ref. MIL-HDBK-5J, fig. 3.7.6.1.4 and Appendix C9)

Modulus of elasticity for the parts in the joint
(Ref. MIL-HDBK-5J, table 3.7.4.0(b1))

$E_flange1 := \left(10.6 \cdot 10^{6} \cdot psi\right)$ $E_flange2 := \left(10.7 \cdot 10^{6} \cdot psi\right)$

Coefficient of thermal expansion for flanges
(Ref. MIL-HDBK-5J, table 3.7.4.0(b1) and Appendix C9)

$u_flange1_hot := 12.7 \cdot 10^{-6} \cdot \frac{\frac{in}{in}}{deg}$ $\quad u_flange2_hot := 12.5 \cdot 10^{-6} \cdot \frac{\frac{in}{in}}{deg}$

$u_flange1_cold := 12.1 \cdot 10^{-6} \cdot \frac{\frac{in}{in}}{deg}$ $\quad u_flange2_cold := 12.1 \cdot 10^{-6} \cdot \frac{\frac{in}{in}}{deg}$

Torque/Preload data

Maximum torque (66.4% of yield) $\quad Tmax := 425 \cdot in \cdot lbf$

Minimum torque (95% of max. torque) $\quad Tmin := 404 in \cdot lbf$

Torque coefficient $\quad k := 0.15$

Loading plane factor $\quad n := 0.5$

Preload Uncertainty $\quad := 0.25$

This collapsed section includes the strength calculations as in the bolt template.

Joint load factor

The joint load factor (f) is specified by Ref. 1 as: $= = \frac{Kb}{Kb + Kj}$

where Kb is the stiffness of the bolt and Kj the stiffness of the joint. Ref. 1, does not give a method for calculating these stiffnesses. Kb and Kj will be calculated using a cylindrical stiffness method.

$k_bolt := \frac{Ad \cdot At \cdot E_bolt}{Ad \cdot lt + At \cdot ld}$ (Ref. 2, page 461)

This gives the washer area as: $A_washer := \beta \cdot \frac{Dw^2 - Dwi^2}{4}$

This gives the Vertex Bracket (flange 1) area as: $A_f1 := \beta \cdot \frac{Dbo^2 - Dbi^2}{4}$

This gives the A286 stainless steel bushing area as: $A_bushing := \beta \cdot \frac{Dbo^2 - Dbi^2}{4}$

This gives the Lower USS (flange 2) area as: $A_f2 := \beta \cdot \frac{Dbo^2 - Dbi^2}{4}$

The stiffness for each of the members is then given by treating each one as a cylinder:

$$k_washer := \begin{cases} 0.0 \cdot \frac{lbf}{in} & \text{if } tw = 0.0 \\ \frac{A_washer \cdot E_washer}{tw} & \text{otherwise} \end{cases}$$

$$k_flange1 := \frac{A_f1 \cdot E_flange1}{tf1} \qquad k_bushing := \frac{A_bushing \cdot E_bushing}{tb}$$

$$k_flange2 := \frac{A_f2 \cdot E_flange2}{tf2}$$

The joint stiffness will be

$$Kj := \begin{cases} \dfrac{1}{\dfrac{1}{k_flange1} + \dfrac{1}{k_bushing} + \dfrac{1}{k_flange2}} & \text{if } tw = 0 \\ \dfrac{1}{\dfrac{1}{k_flange1} + \dfrac{1}{k_bushing} + \dfrac{1}{k_flange2} + \dfrac{1}{k_washer}} & \text{otherwise} \end{cases}$$

The joint load factor will then be:

$$= := \frac{k_bolt}{Kj + k_bolt}$$

stiffness of joint

$$K_therm := \frac{k_bolt \cdot Kj}{k_bolt + Kj}$$

Calculation of Preload on the Bolt

Increase in preload due to increase in temperature

$$Pthr_1 := \begin{bmatrix} (tf1) \cdot (Temp_max - Temp_initial) \cdot (u_flange1_hot - u_bolt_hot) \ \ldots \\ + (tf2) \cdot (Temp_max - Temp_initial) \cdot (u_flange2_hot - u_bolt_hot) \ \ldots \\ + [(tb) \cdot (Temp_max - Temp_initial) \cdot (u_bushing_hot - u_bolt_hot)] \end{bmatrix} \cdot K_therm$$

Decrease in preload due to reduction in temperature:

$$Pthr_2 := \begin{bmatrix} (tf1)\cdot(Temp_min - Temp_initial)\cdot(u_flange1_cold - u_bolt_cold) \ \ldots \\ +(tf2)\cdot(Temp_min - Temp_initial)\cdot(u_flange2_cold - u_bolt_cold) \ \ldots \\ +[(tb)\cdot(Temp_min - Temp_initial)\cdot(u_bushing_cold - u_bolt_cold)] \end{bmatrix}\cdot K_therm$$

This collapsed section includes the rest of the calculations for the bolt template.

Bolt Load data

Bolt/joint stiffness factor	$= = \mathbf{0.913}$	Preload due to temperature	$Pthr_pos = \mathbf{504.2}\cdot lbf$
Max. preload	$PLDmax = \mathbf{9949}\cdot lbf$		$Pthr_neg = -\mathbf{759.5}\cdot lbf$
Min. preload	$PLDmin = \mathbf{4155}\cdot lbf$	Uncertainty factor	$= \mathbf{0.25}$
Joint separation load	$max(Psep) = \mathbf{844.8}\cdot lbf$	Torque coefficient	$k = \mathbf{0.15}$
Max. load on the bolt(Ult)	$max(Pb) = \mathbf{10688}\cdot lbf$	Loading plane factor	$n = \mathbf{0.50}$
Max. load on the bolt(yield)	$max(Pby) = \mathbf{10411}\cdot lbf$	Thread pullout strength required to develop full strength of bolt	$PAs = \mathbf{18189}\cdot lbf$
Bolt Ult tensile strength	$PAt = \mathbf{15158}\cdot lbf$	Nut Ult tensile strength	$Ptu_nut = \mathbf{16158}\cdot lbf$

Length_check = **"Bolt length is sufficient"**

Summary of Margins for bolt

Joint separation	$MS_min_{1,1} = \mathbf{6.87}$	Direct Thread shear Ult	$MS_min_{6,1} = \mathbf{10.23}$
Direct Tension Ult	$MS_min_{2,1} = \mathbf{8.4}$	Total Thread shear Ult	$MS_min_{7,1} = \mathbf{0.70}$
Direct Tension Yield	$MS_min_{3,1} = \mathbf{10.0}$	Shear Ult	$MS_min_{8,1} = \mathbf{6.18}$
Total Tension Ult	$MS_min_{4,1} = \mathbf{0.42}$	Bending Ult	$MS_min_{9,1} = \mathbf{1000}$
Total Tension Yield	$MS_min_{5,1} = \mathbf{0.07}$	Combined shear, tension and bending Ult	$MS_min_{10,1} = \mathbf{0.42}$

Determination of the smallest margin of safety for the bolt, and the failure mode

$MSbolt := min(MS)$ $\quad MSbolt = \mathbf{0.071}$ $\quad$ Failure_Mode = **"Total Tension Yield"**

$MS_min_ID = \mathbf{1516000001}$ Node Identification (1516) and Bolt Number (1) for Minimum Margin

MS_min_LC = **5006** Load Case Number for Minimum Margin

MS_min_P = **704** Applied Tensile Load for Minimum Margin

MS_min_V = **418.8** Applied Shear Load for Minimum Margin

MS_min_M = **0** Applied Bending Moment for Minimum Margin

Bolt Fail-Safe Analysis for Vertex Bracket to Lower USS-02

Since bolt number 1516 (bolt 2) has the lowest margin of safety it is assumed that this bolt will be the first bolt to fail. For fail safe the pattern is assumed to include all 4 bolts and not two separate patterns of two bolts each. There are now 3, NAS1956C 0.375-24 UNFJ fasteners, holding the vertex bracket to the Lower USS-02. The drawing number for the Vertex and Aft Bracket Installation is SGG39135873. The below figure shows the fastener removed as fastener number 3.

$$\begin{array}{cc} \text{size} & \text{thread/in} \\ \end{array}$$

$$bolt2 := \begin{pmatrix} .375 & 24 \\ .375 & 24 \\ .375 & 24 \end{pmatrix}$$

$s := 1 .. rows(bolt2)$

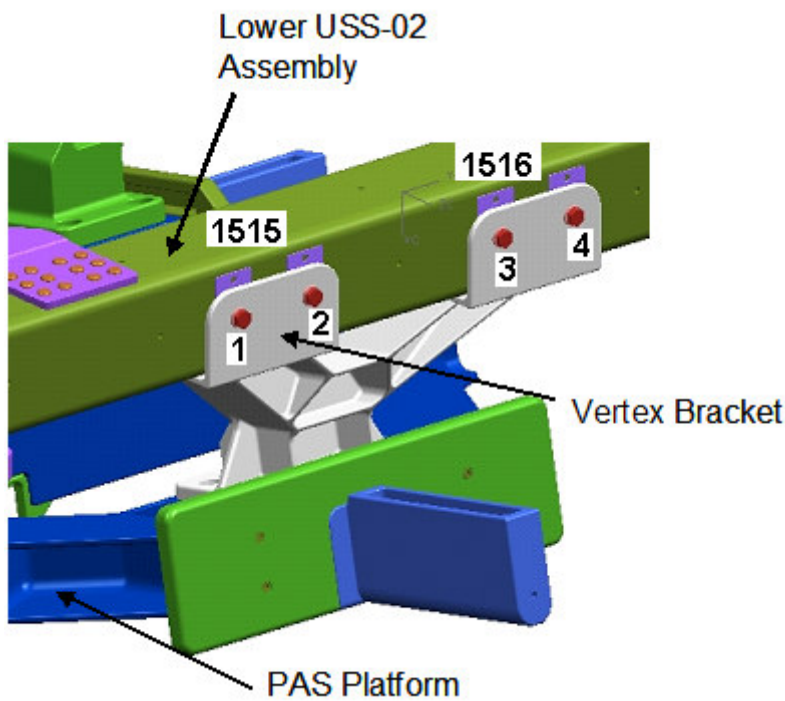

$N2_s := bolt2_{s,2} \cdot \frac{1}{in}$ pitch of bolt

$D2_s := bolt2_{s,1} \cdot in$ bolt diameter

$$At2_s := \beta \cdot \left(\frac{D2_s - 0.9743 \cdot \frac{1}{N2_s}}{2} \right)^2$$

Tensile Area of bolt

$$As2_s := \beta \cdot \left(\frac{D2_s - 1.299038 \cdot \frac{1}{N2_s}}{2} \right)^2$$

Shear Area of bolt

Bolt no. x coordinate y coordinate z coordinate

$$\begin{matrix} 1 \\ 2 \\ 4 \end{matrix} \qquad x2 := \begin{pmatrix} 0.0 \\ 0.0 \\ 0.0 \end{pmatrix} \cdot in \qquad y2 := \begin{pmatrix} -1.75 - 5.5 \\ 1.75 - 5.5 \\ 1.75 + 5.5 \end{pmatrix} \cdot in \qquad z2 := \begin{pmatrix} 0.0 \\ 0.0 \\ 0.0 \end{pmatrix} \cdot in$$

There are 4 bolts. One was removed. The distances for the y direction is + 5.5" half the distance from the cg of the bolt pattern to the bolts.

Location of applied forces and moments

Two loads are recovered and combined into a single load for this analysis. The loads are at the positions 1515 and 1516 shown above. The first grid is 1515. This node is located using cgload2 where the distances are listed x,y,z going down the array. The second is shown as cgload3.

$$cgload2 := \begin{pmatrix} 0.0in \\ -5.5in \\ 0.0in \end{pmatrix} \qquad cgload3 := \begin{pmatrix} 0.0in \\ 5.5in \\ 0.0in \end{pmatrix}$$

Center of gravity of bolt group

$$xcg2 := \frac{\sum_s x2_s}{rows(x2)} \quad xcg2 = 0.00 \cdot in \qquad ycg2 := \frac{\sum_s y2_s}{rows(y2)} \quad ycg2 = -1.25 \cdot in \qquad zcg2 := \frac{\sum_s z2_s}{rows(z2)} \quad zcg2 = 0.00 \cdot in$$

$$cg_{bolt2} := \begin{pmatrix} xcg2 \\ ycg2 \\ zcg2 \end{pmatrix} \qquad cg_{bolt2} = \begin{pmatrix} 0.00 \\ -1.25 \\ 0.00 \end{pmatrix} \cdot in$$

Load Vector

two load vectors are computed, rload2 is for node 1515 and rload3 is for 1516.

$$r_{load2} := cgload2 - cg_{bolt2} \qquad r_{load2} = \begin{pmatrix} 0.00 \\ -4.25 \\ 0.00 \end{pmatrix} \cdot in$$

$$r_{load3} := cgload3 - cg_{bolt2} \qquad r_{load3} = \begin{pmatrix} 0.00 \\ 6.75 \\ 0.00 \end{pmatrix} \cdot in$$

Distance from CG of Bolts to Individual Bolts for shear calculations

$$r2_s := \sqrt{(z2_s - zcg2)^2 + (y2_s - ycg2)^2} \qquad r2 = \begin{pmatrix} 6.000 \\ 2.500 \\ 8.500 \end{pmatrix} \cdot in$$

Reading database file for bolted joint

data := READPRN("**boltsVertUSS.txt**")

$q := 1 .. rows(data)$ $\quad$ $num_bolts2 := rows(bolt2)$

Loads from Vertex loads model, launch case

Note that the element direction is such that compression is positive. This template is derived such that compression is negative. The template is adjusted in the read statements to change the loads to match the template with compression negative.

Axial Load	$Fx2_q := -data_{q,3} \cdot lbf$	Torsion	$Mx2_q := -data_{q,6} \cdot in \cdot lbf$
Shear in Y axis	$Fy2_q := -data_{q,4} \cdot lbf$	Moment about Y axis	$My2_q := -data_{q,7} \cdot in \cdot lbf$
Shear in Z axis	$Fz2_q := -data_{q,5} \cdot lbf$	Moment about Z axis	$Mz2_q := -data_{q,8} \cdot in \cdot lbf$
Element Identification	$ID2_q := data_{q,1}$		
Load Case Number	$LC2_q := data_{q,2}$		
Applied Bending Moment at Bolts	$M2_q := 0 \cdot in \cdot lbf$		

Format of Output File

The stack command below is used to stack the element identifications (ID2) and load cases (LC2) in ascending order per bolt.See the array example above for explanation. Note: bolt number 3 is not included.

$$\left| \begin{array}{ll} \text{"error"} & \text{if } ID2_1 \neq 1515 = \text{"ok"} \\ \text{"error"} & \text{if } ID2_2 \neq 1516 \\ \text{"ok"} & \text{otherwise} \end{array} \right.$$

This checks that the data is in the correct order result should be "ok"

$q := 1 .. \frac{rows(data)}{2}$ set the counter

Moment Distribution

The data has two lines of data for each load case. The first case is for grid 1515 and the second is for 1516. The for loop combines the two lines of data and calculates the Moments due to the offset distance for all loadcases. This is the reason the data must be sorted with the data sorted by load case.

Use the cross-product to determine the additional moments acting on the fasteners.

$$M_t := \left| \begin{array}{l} cc \leftarrow 1 \\ \text{for } ww \in 1 .. \frac{rows(data)}{2} \\ \quad \left| \begin{array}{l} M_t^{\langle ww \rangle} \leftarrow \begin{pmatrix} Mx2_{cc} \\ My2_{cc} \\ Mz2_{cc} \end{pmatrix} + r_{load2} \times \begin{pmatrix} Fx2_{cc} \\ Fy2_{cc} \\ Fz2_{cc} \end{pmatrix} + \begin{pmatrix} Mx2_{cc+1} \\ My2_{cc+1} \\ Mz2_{cc+1} \end{pmatrix} + r_{load3} \times \begin{pmatrix} Fx2_{cc+1} \\ Fy2_{cc+1} \\ Fz2_{cc+1} \end{pmatrix} \\ cc \leftarrow cc + 2 \end{array} \right. \\ M_t \end{array} \right.$$

$Mx_boltcg2_q := Mt_{1,q}$ $My_boltcg2_q := Mt_{2,q}$ $Mz_boltcg2_q := Mt_{3,q}$

$$Fxt := \left| \begin{array}{l} cc \leftarrow 1 \\ \text{for } ww \in 1 .. \frac{rows(data)}{2} \\ \quad \left| \begin{array}{l} Fxt_{ww} \leftarrow Fx2_{cc} + Fx2_{cc+1} \\ cc \leftarrow cc + 2 \end{array} \right. \\ Fxt \end{array} \right.$$

$$Fyt := \left| \begin{array}{l} cc \leftarrow 1 \\ \text{for } ww \in 1 .. \frac{rows(data)}{2} \\ \quad \left| \begin{array}{l} Fyt_{ww} \leftarrow Fy2_{cc} + Fy2_{cc+1} \\ cc \leftarrow cc + 2 \end{array} \right. \\ Fyt \end{array} \right.$$

$$Fzt := \left| \begin{array}{l} cc \leftarrow 1 \\ \text{for } ww \in 1 .. \frac{rows(data)}{2} \\ \quad \left| \begin{array}{l} Fzt_{ww} \leftarrow Fz2_{cc} + Fz2_{cc+1} \\ cc \leftarrow cc + 2 \end{array} \right. \\ Fzt \end{array} \right.$$

$$Cases := \left| \begin{array}{l} cc \leftarrow 1 \\ \text{for } ww \in 1 .. \frac{rows(data)}{2} \\ \quad \left| \begin{array}{l} Cases_{ww} \leftarrow LC2_{cc} \\ cc \leftarrow cc + 2 \end{array} \right. \\ Cases \end{array} \right.$$

$$ID2 := \left| \begin{array}{l} \text{for } ww \in 1 .. \frac{rows(data)}{2} \\ \quad ID2_{ww} \leftarrow 1 \\ ID2 \end{array} \right.$$

Tension on bolts

$$Ftdirect2_{s,q} := \frac{Fxt_q}{num_bolts2}$$

Direct tensile load calculation

$$Fmz2_{s,q} := \left| \begin{array}{l} 0 \cdot lbf \text{ if } (x2_s - xcg2) = 0 \cdot in \\ \frac{Mz_boltcg2_q \cdot (x2_s - xcg2) \cdot At2_s}{\sum_s \left[(x2_s - xcg2)^2 \cdot At2_s \right]} \end{array} \right.$$

$$Ft2_{s,q} := \left| Ftdirect2_{s,q} \right| + \left| Fmz2_{s,q} \right|$$

Total Tensile load

Shear on bolts

Distance from cg of bolt to shear plane is +_2" this causes a shear force due to a moment about y.

Z component shear Loads

$$Fztotal2_{s,q} := \left| \frac{Fzt_q}{num_bolts2} + \frac{Mx_boltcg2_q \cdot (y2_s - ycg2) \cdot As}{\sum_s \left[(y2_s - ycg2)^2 \cdot (As) \right]} \right| + \left| \frac{(My_boltcg2_q \cdot 2in) As}{\sum_s \left[(2in)^2 \cdot As \right]} \right|$$

Total shear load

$$Fstot2_{s,q} := \frac{\sqrt{(Fztotal2_{s,q})^2 + \left(\frac{Fyt_s}{num_bolts2} \right)^2}}{2}$$

Note: Each bolt has 2 shear planes. Therefore, the total shear load is divided by 2.

The stack commands below are used to stack applied axial load (P2), applied shear load (V2), and

applied moment (M2) in ascending order per bolt. These loads are put into an array with the element/bolt number and load case number from above. See the "Output" file below. Notice how there is only 3 bolts, since bolt number 3 is not included.

Since bolt moment is zero, set it to that.

$M3_q := \mathbf{0} \cdot in \cdot lbf$ $\qquad$ $M3 := stack(M3, M3, M3)$

$V2 := stack\left[\left(Fstot2^T\right)^{\langle \mathbf{1} \rangle}, \left(Fstot2^T\right)^{\langle \mathbf{2} \rangle}, \left(Fstot2^T\right)^{\langle \mathbf{3} \rangle}\right]$ $\qquad$ $P2 := stack\left[\left(Ft2^T\right)^{\langle \mathbf{1} \rangle}, \left(Ft2^T\right)^{\langle \mathbf{2} \rangle}, \left(Ft2^T\right)^{\langle \mathbf{3} \rangle}\right]$

Set ID's and cases for the new data sets.

$Cases := stack(Cases, Cases, Cases)$ $\qquad$ $ID2 := stack(ID2, ID2 + \mathbf{1}, ID2 + \mathbf{3})$

The "Output2" file below outputs an array from left to right starting with the element identification (ID2), Load case number (LC2), applied load on the bolt (P2), applied shear on the bolt (V2), and applied moment on the bolt (M2). See the output array example above. The array is written to a text file.

$Output2 := augment\left(ID2, Cases, \frac{P2}{lbf}, \frac{V2}{lbf}, \frac{M3}{in \cdot lbf}\right)$

Note: Since the ID2 and LC2 numbers are dimensionless, the P2, V2, and M2 values are divided by their units in order to make the array dimensionless.

Size of the "Output2" Array: $rows(Output2) = \mathbf{768}$

(3 bolt x 256 load cases) x 1 joints = 768 load cases

$WRITEPRN(\text{\textbf{"output_vertlwuss_r5_fs.txt"}}) := Output2$

Bolt Fail-safe Results

The array from the text file above is read:

data_fs := Output2

$s := 1 .. rows(data_fs)$

Fail-safe Loads

Applied tensile load $P_FS_s := data_fs_{s,3} \cdot lbf$ $ID_FS_s := data_fs_{s,1}$

Applied shear load $V_FS_s := data_fs_{s,4} \cdot lbf$ $LC_FS_s := data_fs_{s,2}$

Applied bending moment $M_FS_s := data_fs_{s,5} \cdot in \cdot lbf$

Fail-safe Factors of Safety

Ult $SFu_FS := 1.0$

Joint Separation $SFsep_FS := 1.0$

This file uses the calculations shown in \\escfil02\2i11_mathcad\8307_bolts\multi_bolt_stiffness_insert_FS_RevC

Fail-Safe Stiffness File

Bolt Fail-safe Load data

Joint separation load $max(Psep_FS) = 810.333 \cdot lbf$ $max(P_FS) = 810.333 \, lbf$

Max. load on the bolt(Ult) $max(Pb_FS) = 10374.3 \cdot lbf$ $max(V_FS) = 890.524 \, lbf$

Summary of fail-safe Margins for bolt

Joint separation	$MS_minFS_{1,1} = 7.21$	Total Thread shear Ult	$MS_minFS_{5,1} = 0.75$
Direct Tension Ult	$MS_minFS_{2,1} = 15.27$	Shear Ult	$MS_minFS_{6,1} = 10.41$
Total Tension Ult	$MS_minFS_{3,1} = 0.46$	Bending Ult	$MS_minFS_{7,1} = 1000$
Direct Thread shear Ult	$MS_minFS_{4,1} = 18.52$	Combined shear, tension and bending Ult	$MS_minFS_{8,1} = 0.46$

Determination of the smallest fail-safe margin of safety for the bolt, and the failure mode

$MSbolt_FS := min(MS_FS)$

$MSbolt_FS = 0.46$	Failure_Mode_FS = **"Combined Shear Tension Bending Ultimate"**
$MS_FSmin_ID = 4$	Element Identification (1516) and Bolt Number (4) for Minimum Margin
$MS_FSmin_LC = 5031$	Load Case Number for Minimum Margin
$MS_FSmin_P = 810.3$	Applied Tensile Load for Minimum Margin
$MS_FSmin_V = 852.3$	Applied Shear Load for Minimum Margin
$MS_FSmin_M = 0$	Applied Bending Moment for Minimum Margin

Bushing Analysis

Factors of safety $FSu := \mathbf{2.0}$ (Ult) $FSy := \mathbf{1.25}$ (yield)

Material properties - A-286

Tensile allowable, Ult and yield $Ftu := \mathbf{140000} \cdot psi$ $Fty := \mathbf{95000} \cdot psi$

Shear allowable $Fsu := \mathbf{.6} \cdot Ftu$ $Fsu = \mathbf{84000}\, psi$

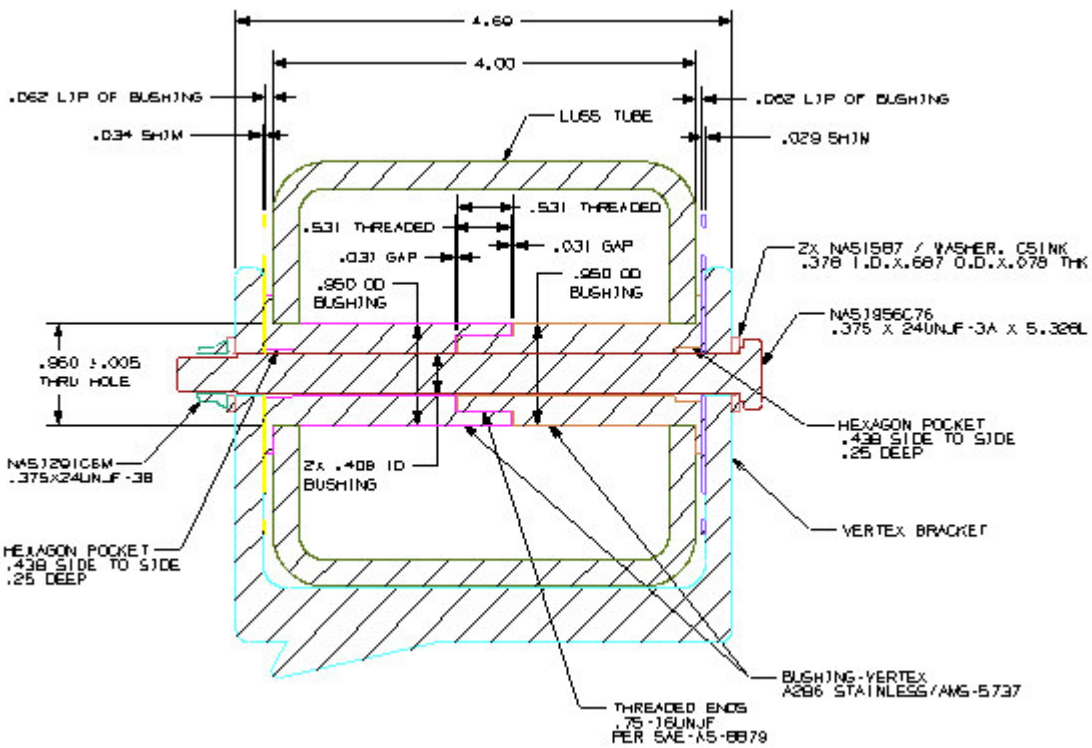

Temperature Correction Factors

+ At 151ºF for On-orbit condition:

- Ult: $y_{u1} := \mathbf{0.97}$ - Yield: $y_{y1} := \mathbf{0.97}$

$Ftua := y_{u1} \cdot Ftu$ $Ftua = \mathbf{135800} \cdot psi$

$Ftya := y_{y1} \cdot Fty$ $Ftya = \mathbf{92150} \cdot psi$

$Fsua := y_{u1} \cdot Fsu$ $Fsua = \mathbf{81480} \cdot psi$

Section Properties: Cross section is a circular tube.

Thick portion of bushing: $Id1 := \mathbf{.409} \cdot in$

Thread Data: $Dt := \mathbf{.750} \cdot in$ $Nt2 := \mathbf{16} \cdot \frac{\mathbf{1}}{in}$

Outer Diameter $Od1 := \mathbf{.950} \cdot in$ $Lst := \mathbf{.531} \cdot in$

Thickness $t1 := \frac{Od1 - Id1}{\mathbf{2}}$ $t1 = \mathbf{0.27} \cdot in$

Thin portion of bushing:

$t2 := \frac{t1}{\mathbf{2}}$ $t2 = \mathbf{0.14} \cdot in$

Outer Diameter $Od2 := \mathbf{.950} \cdot in$

Inner Diameter $Id2 := Od2 - t2 \cdot \mathbf{2}$ $Id2 = \mathbf{0.68} \cdot in$

Area: $Area := \frac{\beta \cdot \left(Od2^{\mathbf{2}} - Id2^{\mathbf{2}}\right)}{\mathbf{4}}$ $Area = \mathbf{0.35} \cdot in^{\mathbf{2}}$

Thread Shear Area: $Ast := \beta \cdot \frac{Dt \cdot Lst}{\mathbf{2}}$ $Ast = \mathbf{0.63} \cdot in^{\mathbf{2}}$

Distance from centroid to outer fiber: $c := \frac{Od2}{\mathbf{2}}$ $c = \mathbf{0.48} \cdot in$

Moments of inertia about centroid: $Iy := \frac{\beta \cdot \left(Od2^{\mathbf{4}} - Id2^{\mathbf{4}}\right)}{\mathbf{64}}$ $Iy = \mathbf{0.0295} \cdot in^{\mathbf{4}}$

$Iz := Iy$

Torsional constant: $Jx := \frac{\beta \cdot \left(Od2^{\mathbf{4}} - Id2^{\mathbf{4}}\right)}{\mathbf{32}}$ $Jx = \mathbf{0.059} \cdot in^{\mathbf{4}}$

Loads

Bushing Thread Shear Strength: $Ptu := Ftu \cdot Ast$ $Ptu = \mathbf{87579.7}\, lbf$

Compressive Load in Bushing:
Applied load + Preload $Pc := \max(Pb)$ $Pc = \mathbf{10688.2}\, lbf$

Applied Shear Load:
(Minimum Margin of Safety from Bolt Analysis above) $Sc := \max\left(\vec{V}\right)$ $Sc = \mathbf{708.2}\, lbf$

Stresses on cross section

Normal is direct axial (compression): $, := \frac{Pc}{Area}$ $\quad , = \mathbf{30874} \cdot psi$

Shear due to transverse loading $\varepsilon v := \frac{Sc}{Area}$ $\quad \max(\varepsilon v) = \mathbf{2046} \cdot psi$

Principal Stresses: $, p1 := \frac{,}{2} + \left[\left(\frac{,}{2}\right)^2 + \varepsilon v^2\right]^{\frac{1}{2}}$ $\quad , p1 = \mathbf{31009} \cdot psi$

$, p2 := \frac{,}{2} - \left[\left(\frac{,}{2}\right)^2 + \varepsilon v^2\right]^{\frac{1}{2}}$ $\quad , p2 = -\mathbf{135} \cdot psi$

Maximum principal stress is: $, max_i := \begin{cases} , p1 & \text{if } |, p1| \geq |, p2| \\ , p2 & \text{otherwise} \end{cases}$

Von Mises Stress: $, vm := \sqrt{, p1^2 + , p2^2 - , p1 \cdot , p2}$ $\quad , vm = \mathbf{31077} \cdot psi$

Margins of safety

Ult $\quad MSu := \left(\frac{Ftua}{FSu \cdot ,}\right) - \mathbf{1}$ $\quad MSu = \mathbf{1.20}$

Ult, shear $\quad MSsu := \left(\frac{Fsua}{FSu \cdot \varepsilon v}\right) - \mathbf{1}$ $\quad MSsu = \mathbf{18.92}$

Yield (using Von Mises) $\quad MSy := \left(\frac{Ftya}{FSy \cdot , vm}\right) - \mathbf{1}$ $\quad MSy = \mathbf{1.37}$

Ult, thread shear $\quad MSstu := \left(\frac{Ptu}{Pc}\right) - \mathbf{1}$ $\quad MSstu = \mathbf{7.19}$

Buckling Analysis Scenario

Additional Material Properties for Steel A-286

Compressive modulus $Ec := \mathbf{29100000} \cdot psi$ (Ref. MIL-HDBK-5J, Table 6.2.1.0(b))

Total Length $L := \mathbf{4.0} \cdot in$

Both ends Pinned Condition

Critical Load $Pcr1 := \frac{\beta^{\mathbf{2}} \cdot Ec \cdot Iy}{L^{\mathbf{2}}}$ $Pcr1 = \mathbf{529844.9}\, lbf$

Both ends Fixed Condition

Critical Load $Pcr2 := \frac{\beta^{\mathbf{2}} \cdot Ec \cdot Iy \cdot \mathbf{4}}{L^{\mathbf{2}}}$ $Pcr2 = \mathbf{2119379.7}\, lbf$

Compressive Load in Bushing: Applied load + Preload $Pc := \max(Pb)$ $Pc = \mathbf{10688.2}\, lbf$

Margin of Safety

Ult $MSub := \left(\frac{Pcr1}{FSu \cdot Pc}\right) - \mathbf{1}$ $MSub = \mathbf{23.79}$

4.12.10 Aft Bracket to Lower USS-02 Bolted Interface

Section 4.12.10 Aft Bracket to Lower USS-02 Bolted Interface

The Aft Bracket to Lower USS-02 Bolt Analysis is performed in the following report sections.

4.12.10.1	Aft Brackets to Lower USS-02 Assembly
4.12.10.1	Aft Brackets to Lower USS-02 Assembly Fail Safe

4.12.10.1 Aft Brackets to Lower USS-02 Assembly

Section 4.12.10.1 PAS Aft Bracket to Lower USS-02 Bolt Analysis

There are a total of 6 fasteners attaching one end of the Aft brackets to the Lower USS-02.
The fasteners are NAS1956C14 180 KSI, 0.375-24 UNJF-3A x 1.453L.
The drawing number for the AMS-02 Assembly is SGG39135873.

Bolt Geometry

size thread/in

$$bolt := \begin{pmatrix} 0.375 & 24 \\ 0.375 & 24 \\ 0.375 & 24 \\ 0.375 & 24 \\ 0.375 & 24 \\ 0.375 & 24 \end{pmatrix}$$

$i := 1 .. rows(bolt)$ # of bolts

$N_i := bolt_{i,2} \cdot \frac{1}{in}$ pitch of bolt

$D_i := bolt_{i,1} \cdot in$ bolt diameter

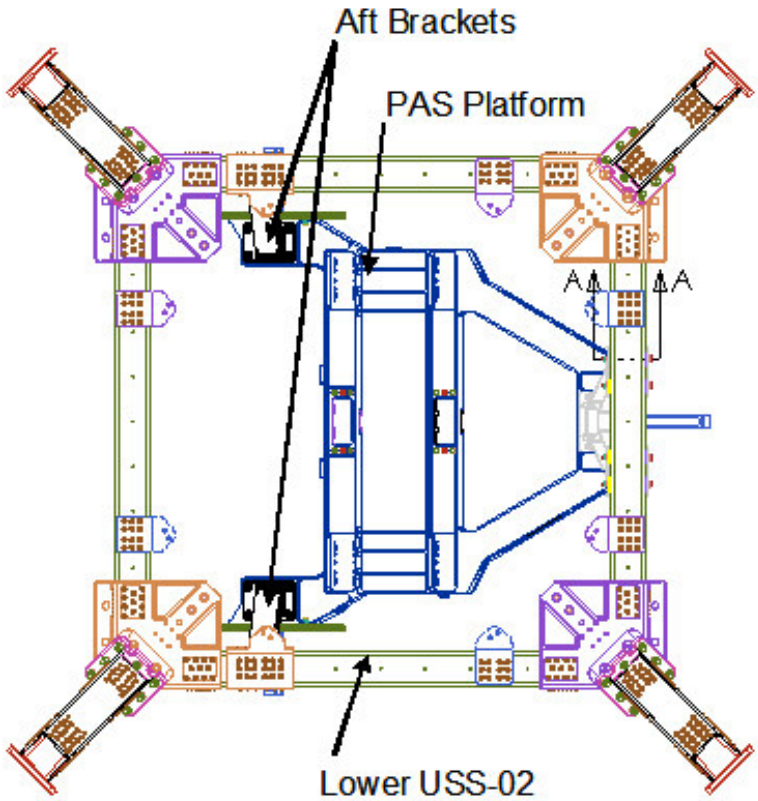

NAS1956C14	BOLT, HEX-HEAD .375-24 UNJF-3A X 1.453L
NAS1587-6C	WASHER, C-SINK .375 X .078THK
MS51831CA204L	INSERT, KEY-LOCKED .375-24UNJF-3B

Ref. Bracket Assembly, PAS RICH, USS-02 Lower Assembly SDG39135766, for Insert Specifications

Tensile Area of bolt

$$At_i := \beta \cdot \left(\frac{D_i - 0.9743 \cdot \frac{1}{N_i}}{2} \right)^2$$

Shear Area of bolt

$$As_i := \beta \cdot \left(\frac{D_i - 1.299038 \cdot \frac{1}{N_i}}{2} \right)^2$$

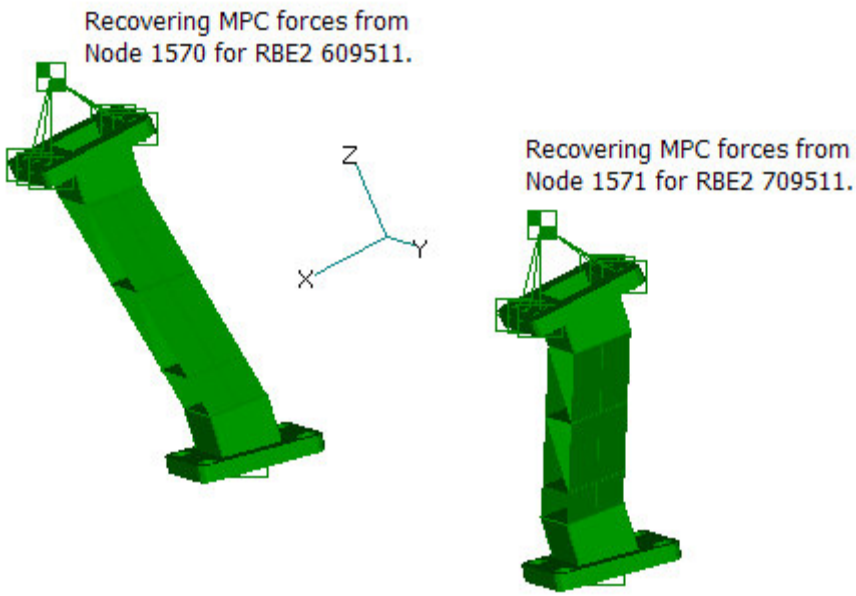

Note: z direction is tension, x & y directions are shear.

Bolt Pattern

Bolt no.	x co-ord	y co-ord	z co-ord
1	−2.125	1.25	0
2	−2.125	0.0	0
3	−2.125	−1.25	0
4	2.125	1.25	0
5	2.125	0.0	0
6	2.125	−1.25	0

$$x := \begin{pmatrix} -2.125 \\ -2.125 \\ -2.125 \\ 2.125 \\ 2.125 \\ 2.125 \end{pmatrix} \cdot in \qquad y := \begin{pmatrix} 1.25 \\ 0.0 \\ -1.25 \\ 1.25 \\ 0.0 \\ -1.25 \end{pmatrix} \cdot in \qquad z := \begin{pmatrix} 0 \\ 0 \\ 0 \\ 0 \\ 0 \\ 0 \end{pmatrix} in$$

Note: Assume our coordinate system origin is located at the CG of the bolt pattern.

Location of applied forces and moments

$xforce := 0.0 \cdot in \qquad yforce := 0.0 \cdot in \qquad zforce := 3.0 \cdot in$

Note: The independent node of the RBE2, where the MPC forces are recovered, is located 3 inches above the CG of the bolt pattern.

$$cgload := \begin{pmatrix} xforce \\ yforce \\ zforce \end{pmatrix} \qquad cgload = \begin{pmatrix} 0.00 \\ 0.00 \\ 3.00 \end{pmatrix} \cdot in$$

The locations are put into an array

Coordinates of the Center of Gravity of the Bolt Pattern

(Necessary if analysis coordinate system origin is not at the CG of the bolt pattern)

$xcg := \frac{\sum_i x_i}{rows(x)}$ $\quad xcg = \mathbf{0.00} \cdot in$ $\quad ycg := \frac{\sum_i y_i}{rows(y)}$ $\quad ycg = \mathbf{0.00} \cdot in$ $\quad zcg := \frac{\sum_i z_i}{rows(z)}$ $\quad zcg = \mathbf{0.00} \cdot in$

$cg_{bolt} := \begin{pmatrix} xcg \\ ycg \\ zcg \end{pmatrix}$ $\quad cg_{bolt} = \begin{pmatrix} \mathbf{0.00} \\ \mathbf{0.00} \\ \mathbf{0.00} \end{pmatrix} \cdot in$

Note: Since the z direction is into the plate the loads are shared equally between the bolts. The x and y axis have a zero offset from the center of gravity.

Load Vector

$r_{load} := cgload - cg_{bolt}$ $\quad r_{load} = \begin{pmatrix} \mathbf{0.00} \\ \mathbf{0.00} \\ \mathbf{3.00} \end{pmatrix} \cdot in$

Distance (RMS) from CG of Bolts to Each Individual Bolts for shear calculations

$r_i := \sqrt{(x_i - xcg)^2 + (y_i - ycg)^2}$ $\quad r = \begin{pmatrix} \mathbf{2.465} \\ \mathbf{2.125} \\ \mathbf{2.465} \\ \mathbf{2.465} \\ \mathbf{2.125} \\ \mathbf{2.465} \end{pmatrix} \cdot in$

Loads model 2-06 was used to retrieve loads at the bolted interface. MPCs located at the center of the aft brackets were post processed in NASPOST for forces and moments in the x, y, and z directions. The MPCs are located on RBE elements 1570 and 1571. These loads are read into an array and distributed out to the 6 bolts for each aft bracket.

Note This joint was checked for minimum margins of safety for on-orbit, liftoff, abort landing, and berthing load cases.

Reading database file for bolted joint

data := READPRN("**boltsAftUSS.txt**")

$j := \mathbf{1} .. rows(data)$ # of load cases

$num_bolts := rows(bolt)$

Element Identification $ID_j := data_{j,1}$ $ID_j := ID_j \cdot 1000 + 1$ Counter for number of bolts in pattern

Load Case Number $LC_j := data_{j,2}$

Applied Bending Moment at Bolts $M_j := 0 \cdot in \cdot lbf$

Shear in X axis $Fx_j := -data_{j,3} \cdot lbf$ Moment about X axis $Mx_j := -data_{j,6} \cdot in \cdot lbf$

Shear in Y axis $Fy_j := -data_{j,4} \cdot lbf$ Moment about Y axis $My_j := -data_{j,7} \cdot in \cdot lbf$

Axial Load $Fz_j := -data_{j,5} \cdot lbf$ Torsion $Mz_j := -data_{j,8} \cdot in \cdot lbf$

Format of Output File

The stack commands below are used to stack the element identifications (ID) and load cases (LC) in ascending order per bolt. The element ID number is located in the first column and the LC numbers in the second column.

$ID := stack(ID, ID + 1, ID + 2, ID + 3, ID + 4, ID + 5)$ # of items in "ID" equals the number of bolts

$LC := stack(LC, LC, LC, LC, LC, LC)$

Moment Distribution at CG of Bolt Pattern for Each Load Case

$$M_{tot}^{\langle j \rangle} := \begin{pmatrix} Mx_j \\ My_j \\ Mz_j \end{pmatrix} + r_{load} \times \begin{pmatrix} Fx_j \\ Fy_j \\ Fz_j \end{pmatrix}$$

Use the cross-product to determine the moments acting at the CG of the bolt pattern.

$Mx_boltcg_j := M_{tot_{1,j}}$ $My_boltcg_j := M_{tot_{2,j}}$ $Mz_boltcg_j := M_{tot_{3,j}}$

Tension on bolts

$$Ftdirect_{i,j} := \frac{Fz_j}{num_bolts}$$

Direct tensile load calculation

$$Fmx_{i,j} := \begin{cases} 0 \cdot lbf & \text{if } (y_i - ycg) = 0 \cdot in \\ \dfrac{[Mx_boltcg_j \cdot (y_i - ycg)] At_i}{\sum_i \left[(y_i - ycg)^2 \cdot At_i\right]} & \end{cases}$$

Tensile due to the moment about X

$$Fmy_{i,j} := \begin{cases} 0 \cdot lbf & \text{if } (x_i - xcg) = 0 \cdot in \\ \dfrac{-My_boltcg_j \cdot (x_i - xcg) \cdot At_i}{\sum_i \left[(x_i - xcg)^2 \cdot At_i\right]} & \end{cases}$$

Tensile due to the moment about Y

$Ft_{i,j} := Ftdirect_{i,j} + Fmx_{i,j} + Fmy_{i,j}$

Shear on bolts

Secondary shear on bolts

$$Fs_{i,j} := \frac{Mz_boltcg_j \cdot r_i \cdot As_i}{\sum_i \left[(r_i)^2 \cdot (As_i) \right]}$$

$$u_i := \operatorname{atan2}(x_i - xcg, y_i - ycg)$$

$$Sy_{i,j} := \sin\left(\frac{\beta}{2} - u_i\right) \cdot Fs_{i,j} \qquad Sx_{i,j} := -\cos\left(\frac{\beta}{2} - u_i\right) \cdot Fs_{i,j}$$

$$u = \begin{pmatrix} 149.5 \\ 180 \\ -149.5 \\ 30.5 \\ 0 \\ -30.5 \end{pmatrix} \cdot deg$$

Loads of first case

$$Sx^{\langle 1 \rangle} = \begin{pmatrix} -64.33 \\ -0.00 \\ 64.33 \\ -64.33 \\ -0.00 \\ 64.33 \end{pmatrix} lbf \qquad Sy^{\langle 1 \rangle} = \begin{pmatrix} -109.36 \\ -109.36 \\ -109.36 \\ 109.36 \\ 109.36 \\ 109.36 \end{pmatrix} lbf$$

$$Fstot_{i,j} := \sqrt{\left(Sx_{i,j} + \frac{Fx_j}{2}\right)^2 + \left(Sy_{i,j} + \frac{Fy_j}{2}\right)^2} \qquad \max(Fstot) = 1187.95\,lbf \qquad \min(Fstot) = 3.21\,lbf$$

Assume that Fx and Fy are shared by only 2 bolts.

The stack commands below are used to stack applied axial load (P), applied shear load (V), and applied moment (M) in ascending order per bolt. These loads are put into an array with the element/bolt number and load case number from above.

$$P := stack\left[(Ft^T)^{\langle 1 \rangle}, (Ft^T)^{\langle 2 \rangle}, (Ft^T)^{\langle 3 \rangle}, (Ft^T)^{\langle 4 \rangle}, (Ft^T)^{\langle 5 \rangle}, (Ft^T)^{\langle 6 \rangle}\right]$$

$$V := stack\left[(Fstot^T)^{\langle 1 \rangle}, (Fstot^T)^{\langle 2 \rangle}, (Fstot^T)^{\langle 3 \rangle}, (Fstot^T)^{\langle 4 \rangle}, (Fstot^T)^{\langle 5 \rangle}, (Fstot^T)^{\langle 6 \rangle}\right]$$

$$M := stack(M, M, M, M, M, M)$$

The "Output" file outputs an array from left to right starting with the element identification (ID), Load case number (LC), applied load on the bolt (P), applied shear on the bolt (V), and applied moment on the bolt (M). The array is then written to a text file.

$$Output := augment\left(ID, LC, \frac{P}{lbf}, \frac{V}{lbf}, \frac{M}{in \cdot lbf}\right)$$

(Note: Since the ID and LC numbers are dimensionless, the P, V, and M values are divided by their units in order to make the array dimensionless.)

Size of the "Output" Array: $rows(Output) = 3072$

(6 bolts x 256 load cases) x 2 joints = 3072 rows

WRITEPRN("**output_aftbrkuss_r5_onorbit.txt**") := Output

Prepared By	B. Dyer	5/21/07	Engineering and Science Contract Group *Structural Analysis Section*	File Name Aft_LwUSS_r5.xmcd
Revised By	Kent Peters	4/27/09		
Checked By	C. Bala			Drawing No. SGG39135873
Title	**Bolts from PAS Aft Bracket to Lower USS-02**			

CHECK Bolts (NAS1956C14 0.375-24 UNJF-3A x 1.453L, A-286)
Washer (NAS1587-6C .375 x .078 THK, C-Sink, CRES)
Insert (MS51831CA204L .375-24 Key-Locked CRES A286 140 KSI)

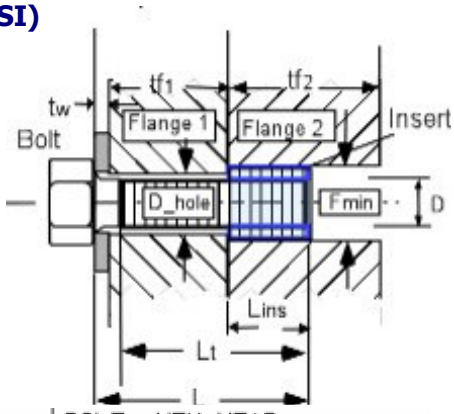

data := READPRN("**output_aftbrkuss_r5_onorbit.txt**")

s := **1** .. rows(data)

Flange 1: Aft Bracket Assy, PAS Assy
Part number: SDG39135814
Material: 7050-T7451, BMS-7-323C

Flange 2: Bracket Assy, PAS RICH, USS-021 Lower Assy
Part number: SDG39135766
Material: 7050-T7451, BMS-7-323C

Loads

Applied tensile load $P_s := data_{s,3} \cdot lbf$ $ID_s := data_{s,1}$

Applied shear load $V_s := data_{s,4} \cdot lbf$ $LC_s := data_{s,2}$

Applied bending moment $M_s := data_{s,5} \cdot in \cdot lbf$

NAS1956C14	BOLT, HEX-HEAD .375-24 UNJF-3A X 1.453L
NAS1587-6C	WASHER, C-SINK .375 X .078THK
MS51831CA204L	INSERT, KEY-LOCKED .375-24UNJF-3B

Factors of Safety

Ultimate	SFu := **2.0**	Yield	SFy := **1.25**
Joint Separation	SFsep := **1.2**	Fitting factor	FF := **1.15**

Temperature data

Assembly	Temp_initial := **70**·deg
Maximum	Temp_max := **151**·deg
Minimum	Temp_min := –**46**·deg

Bolt and Insert Data

Nominal diameter of bolt	D := **.375**·in	Number of threads/inch	$Nt := 24 \cdot \frac{1}{in}$
Total length of bolt	L := **1.453**·in	Length of insert	Lins := **0.500**·in
Threaded length	Lt := **0.578**·in	Min. external diameter of insert	Fmin := **0.495**·in
(If bolt is fully threaded, input Lt = L)		Depth of recess for insert	lr := **0.02**·in

This file uses the calculations shown in \\escfil02\2i11_mathcad\8307_bolts\thread_data.mcd

Washer Data

Thickness of washers	tw := **0.078**·in
Outer Diameter of washer	Dw := **0.687**in
Inner Diameter of washer	Dwi := **0.378**·in
Bolt head dia. across flats	dw := **0.553**·in

Note: If there is no washer tw, Dw and Dwi should be zero

Flange data

Thickness of flange 1	tf1 := **0.750**·in
Thickness of flange 2	tf2 := **0.50**in
Diameter of hole	D_hole := **0.428**·in

(used only if there is no washer)

Material Property Data

Bolt

Temperature correction factor for bolt strength ultimate. $TSu_bolt := \mathbf{0.96}$ Yield $TSy_bolt := \mathbf{0.96}$

Bolt ultimate tensile allowable stress $Ftu_bolt := \mathbf{180000} \cdot psi$

Bolt ultimate shear allowable stress $Fsu_bolt := \mathbf{0.6} \cdot Ftu_bolt$

Bolt yield Tensile allowable stress $Fty_bolt := \mathbf{132353} \cdot psi$

Temperature correction factor for bolt modulus $TE_bolt := \mathbf{0.96}$

Modulus of elasticity of bolt $E_bolt := \left(\mathbf{29.1} \cdot \mathbf{10}^{\mathbf{6}} \cdot psi\right)$

Thermal coefficient for bolt

$$_bolt_hot := \mathbf{9.1} \cdot \mathbf{10}^{-\mathbf{6}} \cdot \frac{\frac{in}{in}}{deg}$$

$$_bolt_cold := \mathbf{8.5} \cdot \mathbf{10}^{-\mathbf{6}} \cdot \frac{\frac{in}{in}}{deg}$$

Insert

Temperature correction factor for insert strength $TS_ins := \mathbf{.96}$

Ultimate tensile allowable stress $Ftu_ins := \mathbf{140000} \cdot psi$

Ultimate shear allowable stress $Fsu_ins := \mathbf{0.6} \cdot Ftu_ins$

Washer

Temperature correction factor for washer modulus $TE_washer := \mathbf{.96}$

Modulus of elasticity of washer: $E_washer := \left(\mathbf{29.1} \cdot \mathbf{10}^{\mathbf{6}} \cdot psi\right)$

Flanges

Stiffness of the joint depends upon number of members in the grip of the fasteners, Modulus of elasticity of these members, and diameters of the bolt and the washer.

Temperature correction factor for flange 1 $Tf1E := \mathbf{.98}$ (modulus) $Tf2s := \mathbf{.92}$ (strength)

Temperature correction factor for flange 2 $Tf2E := \mathbf{.98}$ $Fsu_f2 := \mathbf{43000} \cdot psi$

Modulus of elasticity for the parts in the joint $E_flange1 := \left(\mathbf{10.3} \cdot \mathbf{10}^{\mathbf{6}} \cdot psi\right)$ $E_flange2 := \left(\mathbf{10.3} \cdot \mathbf{10}^{\mathbf{6}} \cdot psi\right)$

Coefficient of thermal expansion for flanges

$$_flange1_hot := \mathbf{12.8} \cdot \mathbf{10}^{-\mathbf{6}} \cdot \frac{\frac{in}{in}}{deg} \qquad _flange2_hot := \mathbf{12.8} \cdot \mathbf{10}^{-\mathbf{6}} \cdot \frac{\frac{in}{in}}{deg}$$

$$_flange1_cold := \mathbf{12.1} \cdot \mathbf{10}^{-\mathbf{6}} \cdot \frac{\frac{in}{in}}{deg} \qquad _flange2_cold := \mathbf{12.1} \cdot \mathbf{10}^{-\mathbf{6}} \cdot \frac{\frac{in}{in}}{deg}$$

Torque/Preload data

Maximum torque (61.3% of yield) $Tmax := \mathbf{392} \cdot in \cdot lbf$ Loading plane factor $n := \mathbf{0.5}$

Minimum torque (95% of max. torque) $Tmin := \mathbf{373} in \cdot lbf$ Preload Uncertainty $= := \mathbf{0.25}$

Torque coefficient $k := \mathbf{0.15}$

Prepared By	B. Dyer	5/21/07	Engineering and Science Contract Group *Structural Analysis Section*	File Name Aft_LwUSS_r5.xmcd
Revised By	Kent Peters	4/27/09		
Checked By	C. Bala			Drawing No. SGG39135873
Title	**Bolts from PAS Aft Bracket to Lower USS-02**			

This file uses the calculations shown in \\escfil02\2i11_mathcad\8307_bolts\multi_bolt_stiffness_insert_RevC

Insert Stiffness File

Bolt Load data

Bolt/joint stiffness factor	$y = \mathbf{0.351}$	Preload due to temperature	$Pthr_pos = \mathbf{656.3} \cdot lbf$
Max. preload	$PLDmax = \mathbf{9367.4} \cdot lbf$		$Pthr_neg = -\mathbf{914.5} \cdot lbf$
Min. preload	$PLDmin = \mathbf{3623.3} \cdot lbf$	Uncertainty factor	$= = \mathbf{0.25}$
Joint separation load	$max(Psep) = \mathbf{2788.1} \cdot lbf$	Torque coefficient	$k = \mathbf{0.15}$
Max. load on the bolt(ultimate)	$max(Pb) = \mathbf{10304.8} \cdot lbf$	Loading plane factor	$n = \mathbf{0.50}$
Max. load on the bolt(yield)	$max(Pby) = \mathbf{9953.3} \cdot lbf$	Thread shear pullout load of bolt or insert	$Pths = \mathbf{26661.2} \cdot lbf$
Bolt ultimate tensile strength	$PAt = \mathbf{14848.5} \cdot lbf$	Thread shear pullout load in parent metal	$Ppths = \mathbf{15379.8} \cdot lbf$

Length_check = **"Bolt length is sufficient"**

Summary of Margins for bolt:

Joint separation	$MS_min_{1,1} = \mathbf{0.37}$	Direct Thread shear Ultimate	$MS_min_{6,1} = \mathbf{1.88}$
Direct Tension Ultimate	$MS_min_{2,1} = \mathbf{1.78}$	Total Thread shear Ultimate	$MS_min_{7,1} = \mathbf{0.49}$
Direct Tension Yield	$MS_min_{3,1} = \mathbf{2.27}$	Shear Ultimate	$MS_min_{8,1} = \mathbf{2.07}$
Total Tension Ultimate	$MS_min_{4,1} = \mathbf{0.44}$	Bending Ultimate	$MS_min_{9,1} = \mathbf{10.00}$
Total Tension Yield	$MS_min_{5,1} = \mathbf{0.10}$	Combined shear, tension and bending ultimate	$MS_min_{10,1} = \mathbf{0.39}$

Determination of the smallest margin of safety for the bolt, and the failure mode:

$MSbolt := min(MS)$

$MSbolt = \mathbf{0.10}$ Minimum Margin of Safety

Failure_Mode = **"Total Tension Yield"**

$MS_min_ID = \mathbf{1570001}$ Element Identification (1570) and Bolt Number (1) for Minimum Margin

$MS_min_LC = \mathbf{5014}$ Load Case Number for Minimum Margin

$MS_min_P = \mathbf{2323.4}$ Applied Tensile Load for Minimum Margin

$MS_min_V = \mathbf{1044.7}$ Applied Shear Load for Minimum Margin

$MS_min_M = \mathbf{0}$ Applied Bending Moment for Minimum Margin

Bolt Fail-Safe Analysis for Aft Bracket to PAS Platform

Since bolt number 1 has the lowest margin of safety it is assumed that this bolt will be the first bolt to fail. There are now 5, NAS1956C14 0.375-24 UNJF-3A fasteners, holding the Aft Bracket to the Lower USS-02. The drawing number for the AMS-02 Assembly is SGG39135873.

$$bolt2 := \begin{array}{c} \begin{array}{cc} \text{size} & \text{thread/in} \end{array} \\ \begin{pmatrix} 0.375 & 24 \\ 0.375 & 24 \\ 0.375 & 24 \\ 0.375 & 24 \\ 0.375 & 24 \end{pmatrix} \end{array}$$

$s := 1 .. rows(bolt2)$

$N2_s := bolt2_{s,2} \cdot \frac{1}{in}$ pitch of bolt

$D2_s := bolt2_{s,1} \cdot in$ bolt diameter

Tensile Area of bolt

$$At2_s := \beta \cdot \left(\frac{D2_s - 0.9743 \cdot \frac{1}{N2_s}}{2} \right)^2$$

Shear Area of bolt

$$As2_s := \beta \cdot \left(\frac{D2_s - 1.299038 \cdot \frac{1}{N2_s}}{2} \right)^2$$

Bolt no.	x co-ord	y co-ord	z co-ord
2	−2.125	0.0	0
3	−2.125	−1.25	0
4	2.125	1.25	0
5	2.125	0.0	0
6	2.125	−1.25	0

$x2 := \begin{pmatrix} -2.125 \\ -2.125 \\ 2.125 \\ 2.125 \\ 2.125 \end{pmatrix} \cdot in$ $y2 := \begin{pmatrix} 0.0 \\ -1.25 \\ 1.25 \\ 0.0 \\ -1.25 \end{pmatrix} \cdot in$ $z2 := \begin{pmatrix} 0 \\ 0 \\ 0 \\ 0 \\ 0 \end{pmatrix} in$

Note Bolt 4 is removed from the bolt pattern.

Location of applied forces and moments

$xforce2 := \mathbf{0.0} \cdot in$ $\quad yforce2 := \mathbf{0.0} \cdot in$ $\quad zforce2 := \mathbf{3.0} \cdot in$

$$cgload2 := \begin{pmatrix} xforce2 \\ yforce2 \\ zforce2 \end{pmatrix} \qquad cgload2 = \begin{pmatrix} \mathbf{0.00} \\ \mathbf{0.00} \\ \mathbf{3.00} \end{pmatrix} \cdot in$$

Center of gravity of bolt group

$$xcg2 := \frac{\sum_s x2_s}{rows(x2)} \quad xcg2 = \mathbf{0.43} \cdot in \qquad ycg2 := \frac{\sum_s y2_s}{rows(y2)} \quad ycg2 = -\mathbf{0.25} \cdot in \qquad zcg2 := \frac{\sum_s z2_s}{rows(z2)} \quad zcg2 = \mathbf{0.00} \cdot in$$

$$cg_{bolt2} := \begin{pmatrix} xcg2 \\ ycg2 \\ zcg2 \end{pmatrix} \qquad cg_{bolt2} = \begin{pmatrix} \mathbf{0.43} \\ -\mathbf{0.25} \\ \mathbf{0.00} \end{pmatrix} \cdot in$$

Note: Since the z direction is into the plate the loads are shared equally between the bolts. However, due to a failure in bolt 6, the x and y directions in the bolt pattern are unsymmetric and have a offset from the center of gravity.

Load Vector

$$r_{load2} := cgload2 - cg_{bolt2} \qquad r_{load2} = \begin{pmatrix} -\mathbf{0.43} \\ \mathbf{0.25} \\ \mathbf{3.00} \end{pmatrix} \cdot in$$

Distance from CG of Bolts to Individual Bolts for shear calculations

$$r2_s := \sqrt{(x2_s - xcg2)^2 + (y2_s - ycg2)^2} \qquad r2_s = \begin{pmatrix} \mathbf{2.562} \\ \mathbf{2.739} \\ \mathbf{2.267} \\ \mathbf{1.718} \\ \mathbf{1.972} \end{pmatrix} \cdot in$$

Reading database file for bolted joint

$data := READPRN(\text{"boltsAftUSS.txt"})$

$q := \mathbf{1} .. rows(data) \qquad num_bolts2 := rows(bolt2)$

Loads from 2-06 loads model

Shear in X axis $Fx2_q := -data_{q,3} \cdot lbf$ Moment about X axis $Mx2_q := -data_{q,6} \cdot in \cdot lbf$

Shear in Y axis $Fy2_q := -data_{q,4} \cdot lbf$ Moment about Y axis $My2_q := -data_{q,7} \cdot in \cdot lbf$

Axial Load $Fz2_q := -data_{q,5} \cdot lbf$ Torsion $Mz2_q := -data_{q,8} \cdot in \cdot lbf$

Element Identification $ID2_q := data_{q,1}$ $ID2_q := ID2_q \cdot 1000 + 1$ Counter for number of bolts in pattern

Load Case Number $LC2_q := data_{q,2}$

Applied Bending Moment at Bolts $M2_q := 0 \cdot in \cdot lbf$

Format of Output File

The stack command below is used to stack the element identifications (ID2) and load cases (LC2) in ascending order per bolt.See the array example above for explanation. **Note bolt number 1 is not included.**

$ID2 := stack(ID2 + 1, ID2 + 2, ID2 + 3, ID2 + 4, ID2 + 5)$

$LC2 := stack(LC2, LC2, LC2, LC2, LC2)$

Moment Distribution

$$M_{tot2}^{\langle q \rangle} := \begin{pmatrix} Mx2_q \\ My2_q \\ Mz2_q \end{pmatrix} + r_{load2} \times \begin{pmatrix} Fx2_q \\ Fy2_q \\ Fz2_q \end{pmatrix}$$

Use the cross-product to determine the additional moments acting on the fasteners.

$Mx_boltcg2_q := M_{tot2_{1,q}}$ $My_boltcg2_q := M_{tot2_{2,q}}$ $Mz_boltcg2_q := M_{tot2_{3,q}}$

Tension on bolts

$$Ftdirect2_{s,q} := \frac{Fz2_q}{num_bolts2}$$

Direct tensile load calculation

$$Fmx2_{s,q} := \begin{cases} 0 \cdot lbf & \text{if } (y2_s - ycg2) = 0 \cdot in \\ \dfrac{[Mx_boltcg2_q \cdot (y2_s - ycg2)] At2_s}{\sum_s [(y2_s - ycg2)^2 \cdot At2_s]} & \end{cases}$$

$$Fmy2_{s,q} := \begin{cases} 0 \cdot lbf & \text{if } (x2_s - xcg2) = 0 \cdot in \\ \dfrac{-[My_boltcg2_q \cdot (x2_s - xcg2)] \cdot At2_s}{\sum_s [(x2_s - xcg2)^2 \cdot At2_s]} & \end{cases}$$

$Ft2_{s,q} := Ftdirect2_{s,q} + Fmx2_{s,q} + Fmy2_{s,q}$ Total Tensile load

Shear on bolts

Secondary shear on bolts $Fs2_{s,q} := \dfrac{Mz_boltcg2_q \cdot r2_s \cdot As2_s}{\sum_s \left[(r2_s)^2 \cdot (As2_s) \right]}$

$u_s := \mathrm{atan2}(x2_s - xcg2, y2_s - ycg2)$

Shear $Sx := 0$ $Sy := 0$

$Sy_{s,q} := \sin\left(\frac{\beta}{2} - u_s\right) \cdot Fs2_{s,q}$ $Sx_{s,q} := -\cos\left(\frac{\beta}{2} - u_s\right) \cdot Fs2_{s,q}$

Loads of first case

$$Sx^{\langle 1 \rangle} = \begin{pmatrix} -23.69 \\ 94.74 \\ -142.12 \\ -23.69 \\ 94.74 \end{pmatrix} lbf \qquad Sy^{\langle 1 \rangle} = \begin{pmatrix} -241.60 \\ -241.60 \\ 161.06 \\ 161.06 \\ 161.06 \end{pmatrix} lbf$$

$u_s =$

174.4
-158.6
41.4
8.4
-30.5

$\cdot deg$

$Fstot2_{s,q} := \sqrt{\left(Sx_{s,q} + \frac{Fx_q}{2}\right)^2 + \left(Sy_{s,q} + \frac{Fy_q}{2}\right)^2}$ $\max(Fstot2) = 1276.47\,lbf$ $\min(Fstot2) = 3.44\,lbf$

Assume that Fx and Fy are shared by only 2 bolts.

The stack commands below are used to stack applied axial load (P2), applied shear load (V2), and applied moment (M2) in ascending order per bolt. These loads are put into an array with the element/bolt number and load case number from above. See the "Output2" file below. **Note there are only 5 bolts, since bolt number 1 is not included.**

$P2 := \mathrm{stack}\left[(Ft2^T)^{\langle 1 \rangle}, (Ft2^T)^{\langle 2 \rangle}, (Ft2^T)^{\langle 3 \rangle}, (Ft2^T)^{\langle 4 \rangle}, (Ft2^T)^{\langle 5 \rangle} \right]$

$V2 := \mathrm{stack}\left[(Fstot2^T)^{\langle 1 \rangle}, (Fstot2^T)^{\langle 2 \rangle}, (Fstot2^T)^{\langle 3 \rangle}, (Fstot2^T)^{\langle 4 \rangle}, (Fstot2^T)^{\langle 5 \rangle} \right]$

$M2 := \mathrm{stack}(M2, M2, M2, M2, M2)$

The "Output2" file below outputs an array from left to right starting with the element identification (ID2), Load case number (LC2), applied load on the bolt (P2), applied shear on the bolt (V2), and applied moment on the bolt (M2). See the output array example above. The array is written to a text file.

$Output2 := \mathrm{augment}\left(ID2, LC2, \frac{P2}{lbf}, \frac{V2}{lbf}, \frac{M2}{in \cdot lbf}\right)$

(Note: Since the ID2 and LC2 numbers are dimensionless, the P2, V2, and M2 values are divided by their units in order to make the array dimensionless.)

Size of the "Output2" Array: $\mathrm{rows}(Output2) = 2560$

(5 bolts x 256 load cases) x 2 joint = 2560 load cases

WRITEPRN("**output_aftbrkuss_r5_onorbit_fs.txt**") := Output2

Bolt Fail-safe Results

The array from the text file above is read:

data_fs := READPRN("**output_aftbrkuss_r5_onorbit_fs.txt**") $s := 1 .. \mathrm{rows}(data_fs)$

Fail-safe Loads

Applied tensile load $P_FS_s := data_fs_{s,3} \cdot lbf$ $ID_FS_s := data_fs_{s,1}$

Applied shear load $V_FS_s := data_fs_{s,4} \cdot lbf$ $LC_FS_s := data_fs_{s,2}$

Applied bending moment $M_FS_s := data_fs_{s,5} \cdot in \cdot lbf$

Fail-safe Factors of Safety

Ultimate $SFu_FS := \mathbf{1.0}$

Joint Separation $SFsep_FS := \mathbf{1.0}$

This file uses the calculations shown in \\escfil02\2i11_mathcad\8307_bolts\ multi_bolt_stiffness_insert_FS_RevC

Fail-Safe Stiffness File

Bolt Fail-safe Load data

Joint separation load $\max(Psep_FS) = \mathbf{3570.172} \cdot lbf$ $\max(P_FS) = \mathbf{3570.172}\, lbf$

Max. load on the bolt(ultimate) $\max(Pb_FS) = \mathbf{10087.6} \cdot lbf$ $\max(V_FS) = \mathbf{1276.467}\, lbf$

Summary of fail-safe Margins for bolt:

Joint separation	$MS_minFS_{1,1} = \mathbf{0.07}$	Total Thread shear Ultimate	$MS_minFS_{5,1} = \mathbf{0.52}$
Direct Tension Ultimate	$MS_minFS_{2,1} = \mathbf{2.62}$	Shear Ultimate	$MS_minFS_{6,1} = \mathbf{4.71}$
Total Tension Ultimate	$MS_minFS_{3,1} = \mathbf{0.47}$	Bending Ultimate	$MS_minFS_{7,1} = \mathbf{10}$
Direct Thread shear Ultimate	$MS_minFS_{4,1} = \mathbf{2.75}$	Combined shear, tension and bending ultimate	$MS_minFS_{8,1} = \mathbf{0.47}$

Determination of the smallest fail-safe margin of safety for the bolt, and the failure mode:

$MSbolt_FS := \min(MS_FS)$

$MSbolt_FS = \mathbf{0.07}$ Failure_Mode_FS = **"Joint Separation"**

$MS_min_ID = \mathbf{1571004}$	Element Identification (1571) and Bolt Number (4) for Minimum Margin
$MS_min_LC = \mathbf{5016}$	Load Case Number for Minimum Margin
$MS_min_P = \mathbf{3570.2}$	Applied Tensile Load for Minimum Margin
$MS_min_V = \mathbf{570.9}$	Applied Shear Load for Minimum Margin
$MS_min_M = \mathbf{0}$	Applied Bending Moment for Minimum Margin

4.13 PAS Nonstructural Items

4.13 PAS Nonstructural Items

4.13.1 Keyway Hardware, SDG39135827

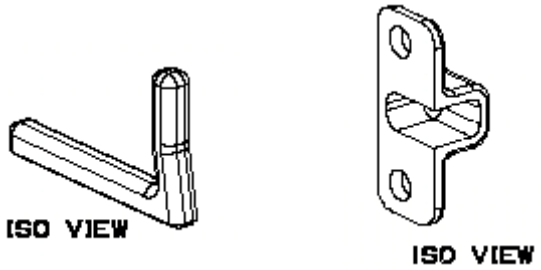

This hardware, made of 15-5 PH, is used to keep the capture bar retained when the bar is manually removed from the active capture claw. There is no significant loading.

4.13.2 Handle Retainer Bracket, SDG39135823

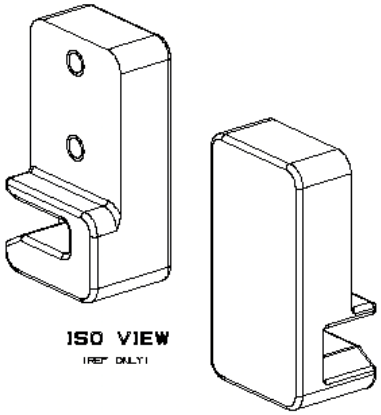

Material is 7075-T7351 Plate. The capture bar handle rides in the groove of this bar, keeping it upright until the capture bar is removed. There is no significant loading.

4.13.3 Cover Assembly, SDG39135829

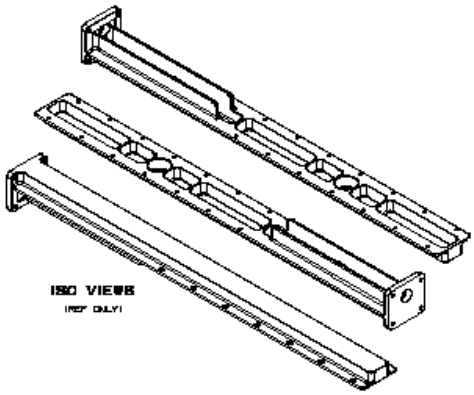

Material is 7075-T3751 plate. This covers the bridge beam and contains the EVA extension. Given that the only loads it will see are liftoff/landing, and the thickness of the part, it is acceptable by engineering judgment.

4.13.4 EVA Extension, SDG39135830

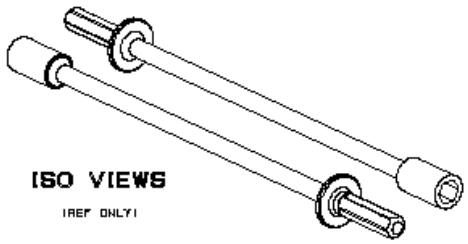

Material is A286 steel. Used by the EVA astronaut to drive the release mechanism wedge backward, forcing the capture bar down to release it from the capture claw. The only loading is the low torque used by the EVA tool. Acceptable by engineering judgment.

4.13.5 Release Screw Plate Assembly, SDG39135831

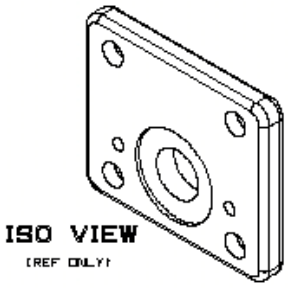

Material is 7075-T3751. Surface for the Lock Mechanism to rest against. As part of the EVA release system, it sees minor loads from liftoff/landing. Acceptable by engineering judgment.

4.13.6 Lock Mechanism Base, SDG39135834

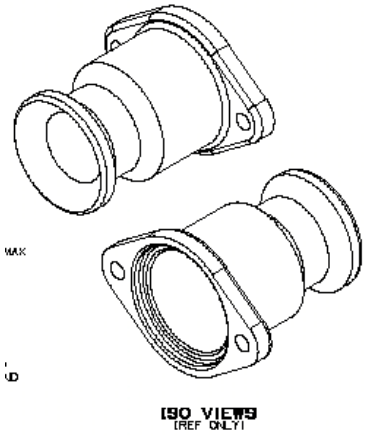

Material is 15-5PH. This is part of the mechanism to prevent the EVA release screw from turning on its own. No significant loading given strength of the part so it is acceptable by engineering judgment.

4.13.7 Lock Mechanism Retractor, SDG39135835

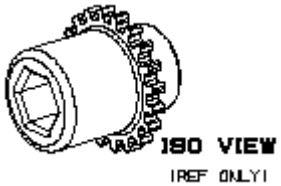

Material is A286 steel. Another part of the mechanism to prevent the EVA release screw from turning on its own. No significant loading given strength of the part so it is acceptable by engineering judgment.

4.13.8 Handle Pin, SDG39135855

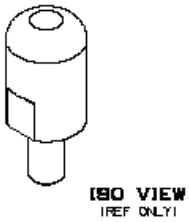

Material is A286 steel. Used to hold the handle in the Handle Retainer bracket, in order to keep the Handle upright until the capture bar is removed. No significant loading, so it is acceptable by engineering judgment.

4.13.9 Handle Bushing, SDG39135852

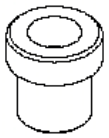

Material is aluminum bronze. Bushing to allow the capture bar handle to rotate upward so the EVA astronaut may remove the capture bar. No significant loading, so acceptable by engineering judgment.

4.13.10 Bushings, SDG39135842

-003
ISO VIEW
(REF ONLY)

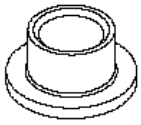

-001
ISO VIEW
(REF ONLY)

Material is Aluminum Bronze. Bushings used for EVA release mechanism (-003) and Capture bar housing (-001). No significant loading so acceptable by engineering judgment.

4.13.11 Wedge Release Screw, SDG39135843

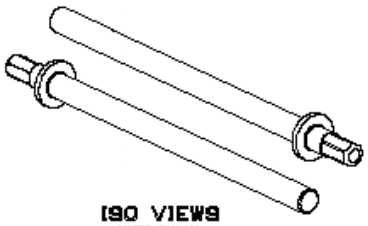

ISO VIEWS
(REF ONLY)
SCALE: 1/1

Material is A286. Used to move the release wedge back and forth. Driven by the EVA extension. Only loading is low torque caused the EVA tool so part is acceptable by engineering judgment.

4.13.12 Bearing Housing Cover, SDG39135846

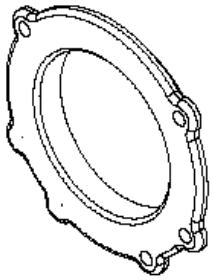

Material is 15-5PH. Cover to keep spherical bearing retained in the bearing housing. No loading, so acceptable by engineering judgment.

4.13.13 Limit Screws, SDG39135847

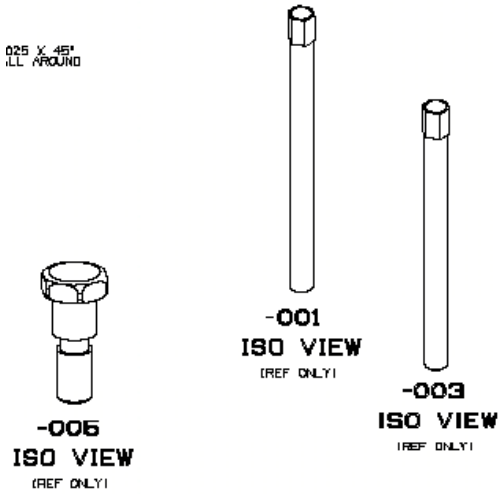

Material is A286 steel. –001 and –003 are limit screws used to prevent the release wedge from moving too far. –006 parts are shoulder screws used to hold the release mechanism housing to the bridge beam. None of these screws see significant loading, so they are acceptable by engineering judgment.

4.13.14 Release Screw Cover, SDG39135848

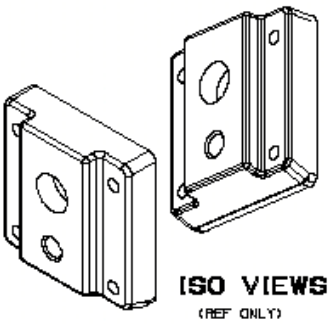

Material is 7075-T3751. Surface for the wedge release screw to ride in. As part of the EVA release system, it sees minor loads from liftoff/landing. Acceptable by engineering judgment.

4.13.15 Housing Assembly, Release Mechanism, SDG39135838

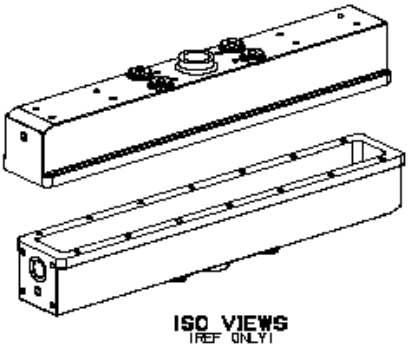

Material is 7075-T7351. Housing in which the release wedge sits. It is mounted to the bridge beam using shoulder bolts. This cross section is closed once the EVA extension is mounted to the top lip. This results in a very robust cross section compared to the Bridge Beam, which is a 'hat' section. Therefore, it is acceptable by comparison to the Bridge beam margins.

4.13.16 Slip Plate, SDG39135839

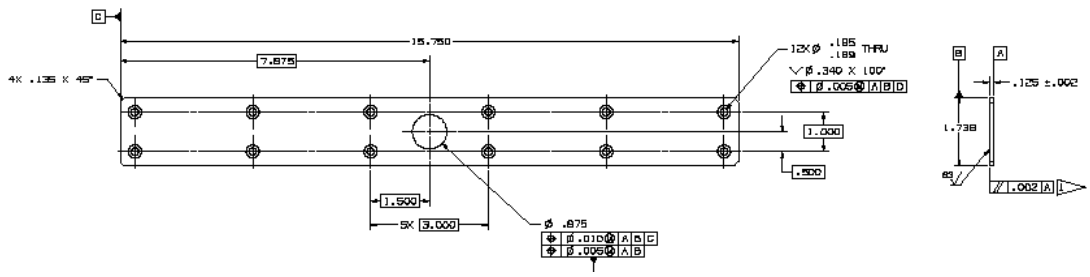

Material is 15-5PH. This plate mounts to the inside bottom of the Release Housing. It provides a low friction surface for the Release Wedge to slide along. It is acceptable by engineering judgment.

4.13.17 Wedge, SDG39135840

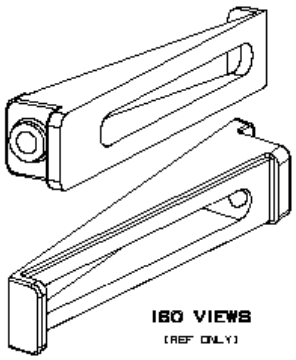

Material is 15-5 PH. Wedge slides along the inside of the Release housing. The Bearing Housing is held to its upper surface using a wedge screw. When the wedge is pulled using the EVA extension screw, the bearing housing is lowered, resulting in the capture bar being lowered and release from the capture claw. Primary loading is block compression cause by the 6430 lbf capture bar loading. Given the size of the wedge, it is acceptable by engineering judgment.

4.13.18 Wedge Components, SDG39135841

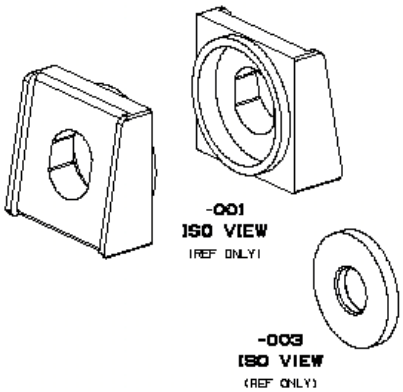

Material is 15-5 PH. –001 is the wedge washer that allows the bearing housing to ride along the wedge's surface. –003 is a washer between the nut on the threaded end of the bearing housing and the wedge washer. Parts are acceptable by engineering judgment.

4.13.19 Locating Pins, SDG39135857

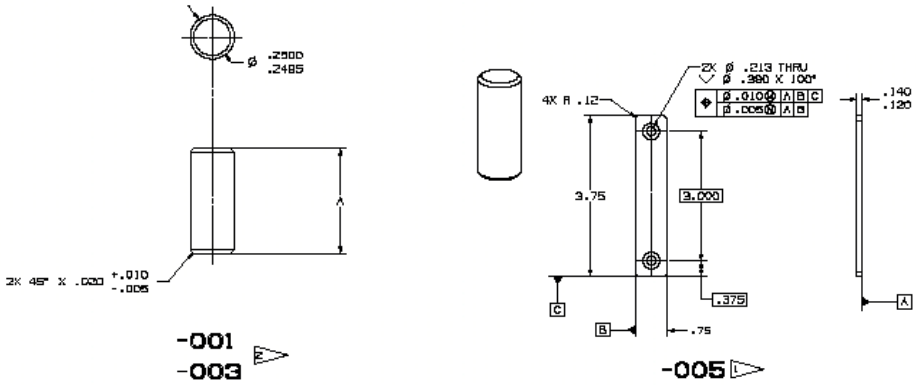

Material is A286 (-001, -003) and 6061-T6 (-005). –001 and –003 are locating pins used in the PAS Platform Base assembly. –005 is a shim used in mounting the guidepins to the base. Acceptable by engineering judgment.

4.13.20 Guide Pin Shim, SDG39135856

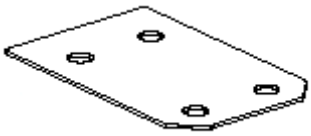

Material is aluminum shim stock. Used in assembly of the PAS platform base assembly. Acceptable by engineering judgment.

4.13.21 Scuff Plates, SDG39135819

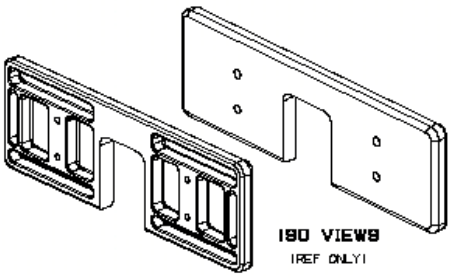

Material is 7075-T7351. The only loading is an on-orbit kick load. Given the thickness of the cross section the plates are acceptable by engineering judgment.

4.13.22 Capture Bar Retainer Brackets, SDG39135820

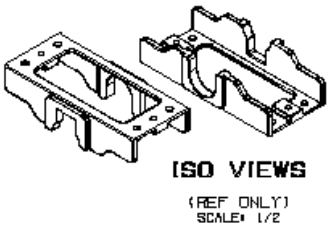

Material is 15-5PH. Brackets mount to the underside of the PAS platform. They are used to keep the capture bar aligned perpendicular to its axis. Since the primary capture bar load is vertical, there is no significant loading and the parts are acceptable by engineering judgment.

5.0 Strength Assessment for AMS-02 STS and ISS Integration Hardware

5.1 UMA Bracket

5.2 PVGF Bracket

Margins of Safety

Table 5.2-1: Minimum Margin of Safety Summary

Part / Dwg Number	Part Name / Description	Material & Heat Treatment	Critical Load Condition	Failure Mode	Margin of Safety	Reference Page
SDG39135860	PVGF Bracket	AL ALY 7075-T7351	SSRMS Interface Loads	Ultimate	0.082 (u)	5.2-13

Notes:

1. Factors of Safety are 2.0 for Ultimate and 1.25 for Yield.
2. Applied liftoff/landing loads, kickload, and SSRMS/PVGF interface loads.
3. u = ultimate

Factors of Safety

The hardware is designed with a yield factor of 1.25 and an ultimate factor of 2.0 against limit loads.

Description of Structure

Figure 5.2-1 below shows the locations of the PVGF brackets on the Upper USS-02. The brackets were machined out of 7075-T7351 Aluminum Alloy plate. The PVGF bracket bolts to the Upper USS-02 and the other side of PVGF bracket is used to bolt the PVGF.

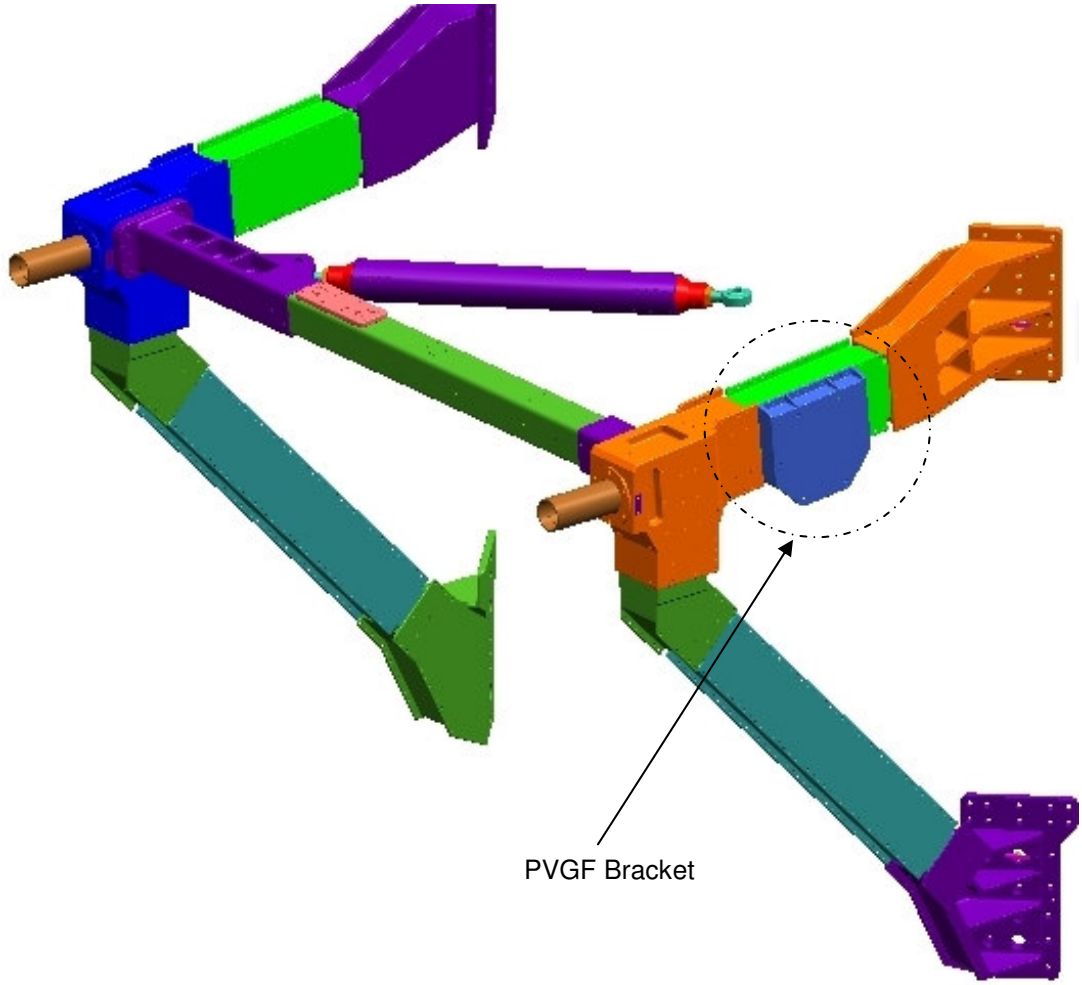

Figure 5.2-1 : Location of PVGF Brackets on Upper USS-02

Description of Model

A FE model was built for the PVGF bracket hardware using FEMAP.

1. The part was modeled as CQUAD4, CTRIA3, CBAR, and CHEXA elements.
2. The bolt holes are represented with SPC's with DOF's 1, 2, and 3.
3. The mass of the PVGF is represented by a mass element in the model. The interface between the PVGF and PVGF bracket is represented by a RBE3 rigid element with DOF's 1 thru 6 at the reference grid point. The grid points at the bolt locations have DOF's 1, 2, and 3.
4. A RBE2 with DOF's 1, 2, and 3 were used to distribute the load at the bolt hole locations.

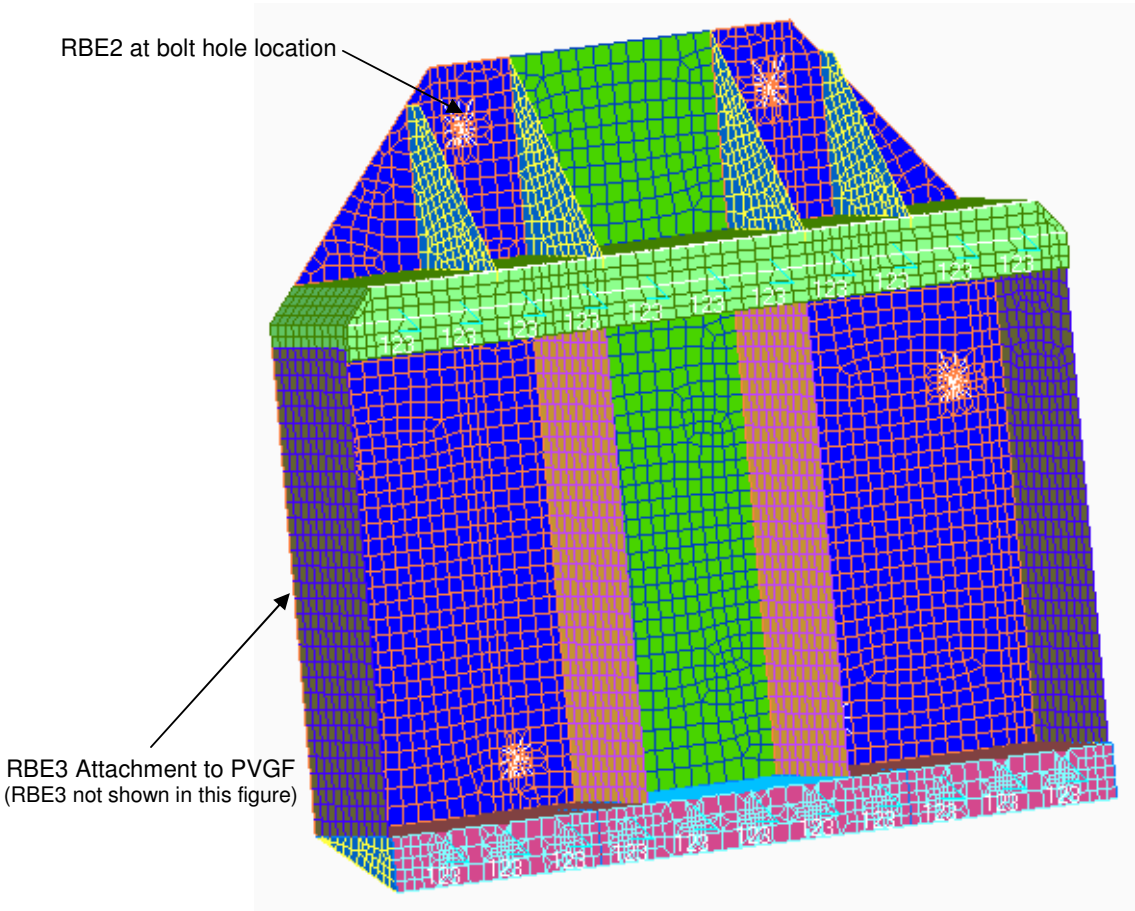

Figure 5.2-2 : FEMAP Model of PVGF Bracket

MSC/NASTRAN v.2005 was used as a solver for analyzing the math model of the PVGF bracket. Stresses were recovered and sorted to find the maximum of Principal, Von-Mises, and Shear in the PVGF Bracket. SPC forces were recovered at the bolt locations.

Table below shows detail of model inputs.

Table 5.2-2: Inputs of Finite Element Model of PVGF Bracket

DESCRIPTION	NODE #	ELEM #	PROP	MAT'L
PVGF Bracket	2 – 19991	1 – 15696	1-25	1 – 7050-T7451

Model Checks

Rigid body checks were performed using MSC/NASTRAN. Results are shown below. The KGG, KNN and KFF matrices all pass with low strain energies.

```
*** USER INFORMATION MESSAGE 7570 (GPWG1D)
     RESULTS OF RIGID BODY CHECKS OF MATRIX KGG      (G-SET)  FOLLOW:
     PRINT RESULTS IN ALL SIX DIRECTIONS AGAINST THE LIMIT OF   1.000000E-02
           DIRECTION        STRAIN ENERGY        PASS/FAIL
           ---------        -------------        ---------
             1               2.005845E-08          PASS
             2               9.328232E-09          PASS
             3               1.199028E-07          PASS
             4               4.664418E-07          PASS
             5               1.223564E-06          PASS
             6               2.255611E-06          PASS

*** USER INFORMATION MESSAGE 7570 (GPWG1D)
     RESULTS OF RIGID BODY CHECKS OF MATRIX KNN      (N-SET)  FOLLOW:
     PRINT RESULTS IN ALL SIX DIRECTIONS AGAINST THE LIMIT OF   1.000000E-02
           DIRECTION        STRAIN ENERGY        PASS/FAIL
           ---------        -------------        ---------
             1               5.370248E-08          PASS
             2               5.856691E-09          PASS
             3               1.228968E-07          PASS
             4               4.493716E-07          PASS
             5               1.203667E-06          PASS
             6               2.631400E-06          PASS

*** USER INFORMATION MESSAGE 7570 (GPWG1D)
     RESULTS OF RIGID BODY CHECKS OF MATRIX KFF      (F-SET)  FOLLOW:
     PRINT RESULTS IN ALL SIX DIRECTIONS AGAINST THE LIMIT OF   1.000000E-02
           DIRECTION        STRAIN ENERGY        PASS/FAIL
           ---------        -------------        ---------
             1               5.370248E-08          PASS
             2               5.856691E-09          PASS
             3               1.228968E-07          PASS
             4               4.493716E-07          PASS
             5               1.203667E-06          PASS
             6               2.631400E-06          PASS
```

```
*** USER INFORMATION MESSAGE 7570 (GPWG1D)
     RESULTS OF RIGID BODY CHECKS OF MATRIX KAA1      (A-SET)  FOLLOW:
     PRINT RESULTS IN ALL SIX DIRECTIONS AGAINST THE LIMIT OF   1.000000E-02
           DIRECTION        STRAIN ENERGY        PASS/FAIL
           ---------        -------------        ---------
             1               5.370248E-08          PASS
             2               5.856691E-09          PASS
             3               1.228968E-07          PASS
             4               4.493716E-07          PASS
             5               1.203667E-06          PASS
             6               2.631400E-06          PASS
```

A further check is that of rigid body modes. The first 10 unconstrained modes are shown below. There are six rigid body modes (~ 0.0), and then good separation with the first non-rigid body mode.

Table 5.2-3: Eigenvalue Summary of PVGF Bracket

REAL EIGENVALUES						
MODE NO.	EXTRACTION ORDER	EIGENVALUE	RADIANS	CYCLES	GENERALIZED MASS	GENERALIZED STIFFNESS
1	1	-2.018E-05	4.492E-03	7.149E-04	1.000E+00	-2.018E-05
2	2	-1.096E-05	3.310E-03	5.269E-04	1.000E+00	-1.096E-05
3	3	-1.334E-06	1.155E-03	1.838E-04	1.000E+00	-1.334E-06
4	4	5.492E-07	7.411E-04	1.179E-04	1.000E+00	5.492E-07
5	5	1.349E-06	1.162E-03	1.849E-04	1.000E+00	1.349E-06
6	6	8.586E-06	2.930E-03	4.663E-04	1.000E+00	8.586E-06
7	7	1.050E+07	3.241E+03	5.158E+02	1.000E+00	1.050E+07
8	8	9.495E+07	9.744E+03	1.551E+03	1.000E+00	9.495E+07
9	9	1.525E+08	1.235E+04	1.965E+03	1.000E+00	1.525E+08
10	10	1.728E+08	1.315E+04	2.092E+03	1.000E+00	1.728E+08

Additionally, the mass of the FEM (.1896942*g = 73.22 lb) matches closely the mass of the actual hardware (PVGF bracket plus PVGF = 72.3 lb).

```
      DIRECTION
MASS AXIS SYSTEM (S)     MASS              X-C.G.        Y-C.G.        Z-C.G.
        X            1.896942E-01      0.000000E+00  5.243851E+00 -8.148203E-01
        Y            1.896942E-01      5.808192E+00  0.000000E+00 -8.148203E-01
        Z            1.896942E-01      5.808192E+00  5.243851E+00  0.000000E+00
```

Material and Temperature

The PVGF bracket is made of 7075-T7351 Aluminum Alloy. Material properties of 7075-T7351 are taken from MMPDS-01. The temperature extremes for the PVGF bracket are -65 ^{o}F to 225 ^{o}F.

Analysis

The critical stresses for the PVGF bracket are compared to the ultimate and yield strength of 7075-T7351 Aluminum Alloy. The PVGF bracket was analyzed for liftoff/landing loads, 125 lb kickload, and SSRMS/PVGF interface loads. All margins of safety are positive.

CHECK OF PVGF BRACKET

Material Properties : 7075-T7351 AL ALY *(Ref. MMPDS-01, Table 3.7.6.0(b_3))*

$F_{tu} := 63000 \cdot psi$

$F_{ty} := 52000 \cdot psi$

$F_{su} := 39000 \cdot psi$

Factors of Safety, $FS_u := 2.0$ $FS_y := 1.25$

Temperature reduction factors,

+ At 225°F: (For PVGF, the temperature extremes are -65°F to 225°F; These temperature reduction factors are conservative for liftoff/landing conditions)

- Ultimate: $\beta_{u1} := 0.87$ *(Ref. MMPDS-01, Figure 3.7.6.1.1(c))*

- Yield: $\beta_{y1} := 0.89$ *(Ref. MMPDS-01, Figure 3.7.6.1.1(d))*

Allowable stresses:

$F_{tu1.a} := \beta_{u1} \cdot F_{tu}$

$F_{tu1.a} = 54810\,psi$

$F_{ty1.a} := \beta_{y1} \cdot F_{ty}$

$F_{ty1.a} = 46280\,psi$

$F_{su1.a} := \beta_{u1} \cdot F_{su}$

$F_{su1.a} = 33930\,psi$

Applying Simplified Design Loads from AMS-02 SVP (Table 4-4) for Liftoff and Landing Loads

Maximum Von-Mises, principal, and shear stresses of plate elements are selected from 24 load cases. The launch/landing design limit load factors for small secondary structures were used in this analysis. Using Table 4-4 from document JSC 28792, a load factor of 40g was obtained (since the mass of the PVGF bracket is less than 20 lb). This load factor was applied in all three axis, with a load factor of 25% of the primary load applied to the remaining two orthogonal axes, simultanously. NASPOST V.2.1 is used to sort out the maximum stresses within the load cases.

Load Case	X-axis Load Factor	Y-axis Load Factor	Z-axis Load Factor
1001	40	10	10
1002	40	-10	10
1003	40	-10	-10
1004	40	10	-10
1005	-40	10	10
1006	-40	-10	10
1007	-40	10	-10
1008	-40	-10	-10
1009	10	40	10
1010	10	-40	10
1011	10	-40	-10
1012	10	40	-10
1013	-10	40	10
1014	-10	-40	10
1015	-10	40	-10
1016	-10	-40	-10
1017	10	10	40
1018	10	-10	40
1019	10	-10	-40
1020	10	10	-40
1021	-10	10	40
1022	-10	-10	40
1023	-10	10	-40
1024	-10	-10	-40

$u_{uu.max} := 9500.57 \cdot psi$ *LC# 1016, ELEM# 14983* *(Maximum Principal Stress)*

(See Appendix A24, p.A24-28)

$u_{uy.max} := 9444.71 \cdot psi$ *LC# 1014, ELEM# 15132* *(Maximum Von-Mises Stress)*

(See Appendix A24, p.A24-36)

$u_{us.max} := 5290.69 \cdot psi$ *LC# 1009; ELEM# 15131* *(Maximum Shear Stress)*

(see Appendix A24, p.A24-44)

Margins of Safety,

$$MS_{u1} := \frac{F_{tu1.a}}{FS_u \cdot u_{uu.max}} - 1 \qquad MS_{u1} = 1.885$$

$$MS_{y1} := \frac{F_{ty1.a}}{FS_y \cdot u_{uy.max}} - 1 \qquad MS_{y1} = 2.92$$

$$MS_{s1} := \frac{F_{su1.a}}{FS_u \cdot u_{us.max}} - 1 \qquad MS_{s1} = 2.21$$

Applying 125 lb Kickload

Maximum Von-Mises, principal, and shear stresses of plate elements are selected from the 125 lb kickload cases. The kickload was applied on the side of the PVGF bracket since it was the largest unsupported area in the bracket. NASPOST V.2.1 is used to sort out the maximum stresses within the load cases.

Load Case	Node Where Load is Applied	Fx	Fy	Fz
4001	6660	125	0	0
4002	6660	0	125	0
4003	6660	0	0	125
4004	7007	-125	0	0
4005	7007	0	125	0
4006	7007	0	0	125

$u_{uu1.max} := 2053.12 \cdot psi$ *LC# 4001, ELEM# 5433* *(Maximum Principal Stress)*

(See Appendix A24, p.A24-76)

$u_{uy1.max} := 1863.63 \cdot psi$ *LC# 4001, ELEM# 5433* *(Maximum Von-Mises Stress)*

(See Appendix A24, p.A24-84)

$u_{us1.max} := 1026.56 \cdot psi$ *LC# 4001; ELEM# 5433* *(Maximum Shear Stress)*

(see Appendix A24, p.A24-92)

Margins of Safety,

$$MS_{u1} := \frac{F_{tu1.a}}{FS_u \cdot u_{uu1.max}} - 1 \qquad MS_{u1} = 12.348$$

$$MS_{y1} := \frac{F_{ty1.a}}{FS_y \cdot u_{uy1.max}} - 1 \qquad MS_{y1} = 18.87$$

$$MS_{s1} := \frac{F_{su1.a}}{FS_u \cdot u_{us1.max}} - 1 \qquad MS_{s1} = 15.53$$

Applying PVGF Structural Interface Loads from SSP 42004, Part 1, Revision H (Section N3.2.1.3)

Maximum Von-Mises, principal, and shear stresses of plate elements are selected from the 36 load cases generated using the loads given in section N3.2.1.3 of document SSP 42004. The following table shows the loads given in document SSP 42004.

Torsion Moment	Bending Moment	Shear Force	Axial Force
(in-lb)	(in-lb)	(lb)	(lb)
27360	27360	225	225

One moment and one force can be applied simultaneously. The forces and moments are valid for any direction. Therefore, the following 36 load cases were generated. NASPOST V.2.1 is used to sort out the maximum stresses within the load cases.

	Force Applied			Moment Applied		
Load Case	X -dir	Y-dir	Z-dir	X -dir	Y-dir	Z-dir
5001	225			27360		
5002	-225			27360		
5003	225			-27360		
5004	-225			-27360		
5005		225		27360		
5006		-225		27360		
5007		225		-27360		
5008		-225		-27360		
5009			225	27360		
5010			-225	27360		
5011			225	-27360		
5012			-225	-27360		
5013	225				27360	
5014	-225				27360	
5015	225				-27360	
5016	-225				-27360	
5017		225			27360	
5018		-225			27360	
5019		225			-27360	
5020		-225			-27360	
5021			225		27360	
5022			-225		27360	
5023			225		-27360	
5024			-225		-27360	
5025	225					27360
5026	-225					27360
5027	225					-27360
5028	-225					-27360
5029		225				27360
5030		-225				27360
5031		225				-27360
5032		-225				-27360
5033			225			27360
5034			-225			27360
5035			225			-27360
5036			-225			-27360

$u_{uu2.max} := 25324.11 \cdot psi$ *LC# 5024, ELEM# 14951* *(Maximum Principal Stress)*

(See Appendix A24, p.A24-123)

$u_{uy2.max} := 23959.87 \cdot psi$ *LC# 5024, ELEM# 14951* *(Maximum Von-Mises Stress)*

(See Appendix A24, p.A24-131)

$u_{us2.max} := 12662.06 \cdot psi$ *LC# 5024; ELEM# 14951* *(Maximum Shear Stress)*

(see Appendix A24, p.A24-139)

Margins of Safety,

$$MS_{u1} := \frac{F_{tu1.a}}{FS_u \cdot u_{uu2.max}} - 1 \qquad MS_{u1} = 0.082$$

$$MS_{y1} := \frac{F_{ty1.a}}{FS_y \cdot u_{uy2.max}} - 1 \qquad MS_{y1} = 0.55$$

$$MS_{s1} := \frac{F_{su1.a}}{FS_u \cdot u_{us2.max}} - 1 \qquad MS_{s1} = 0.34$$

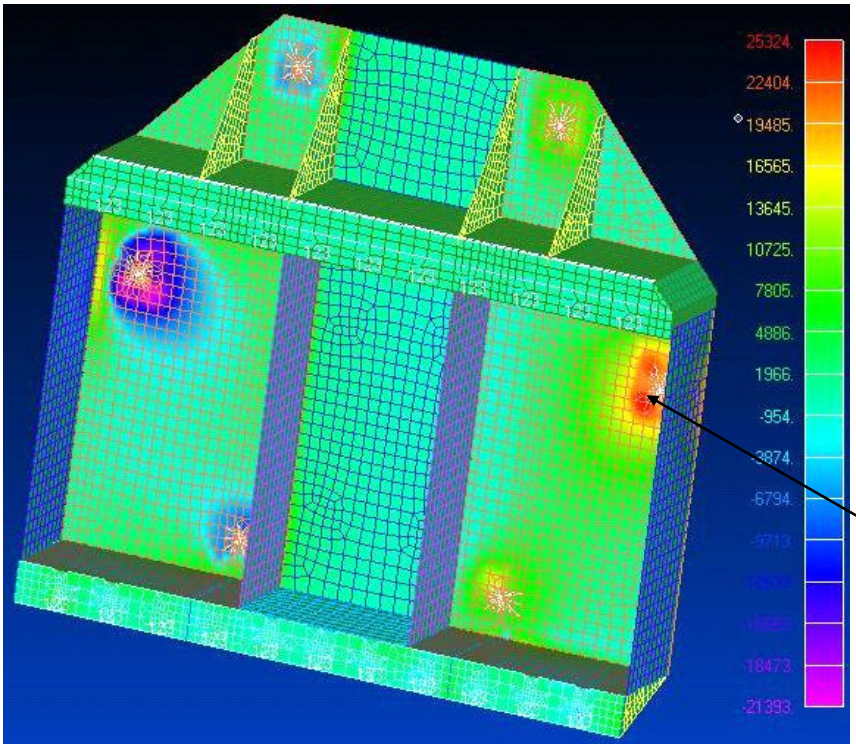

Figure 5.2-3 : Stress Contour Plot of Minimum Principal Stress

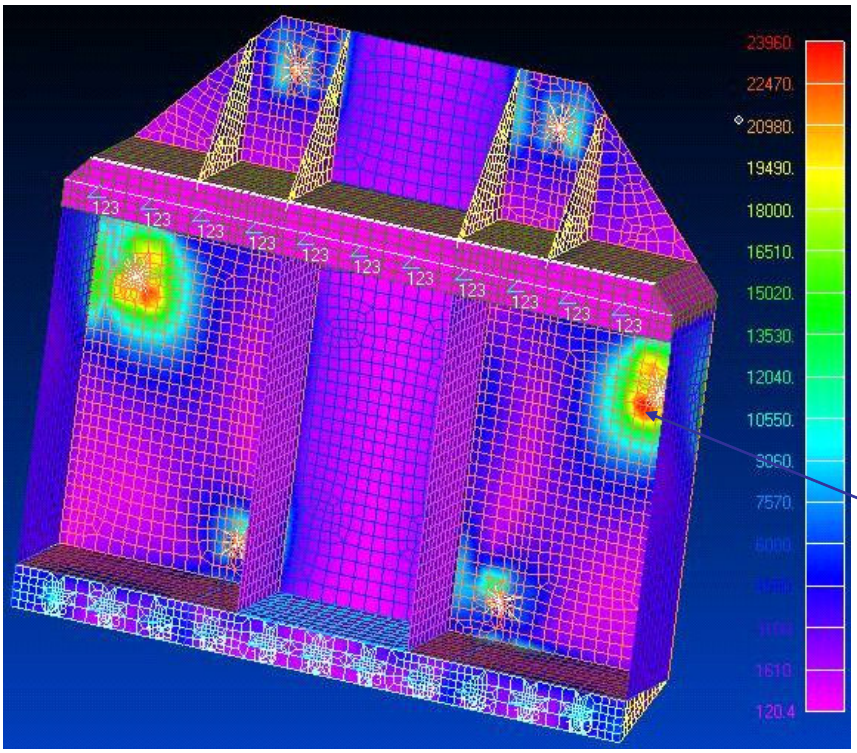

Figure 5.2-4 : Stress Contour Plot of Von Mises Stress

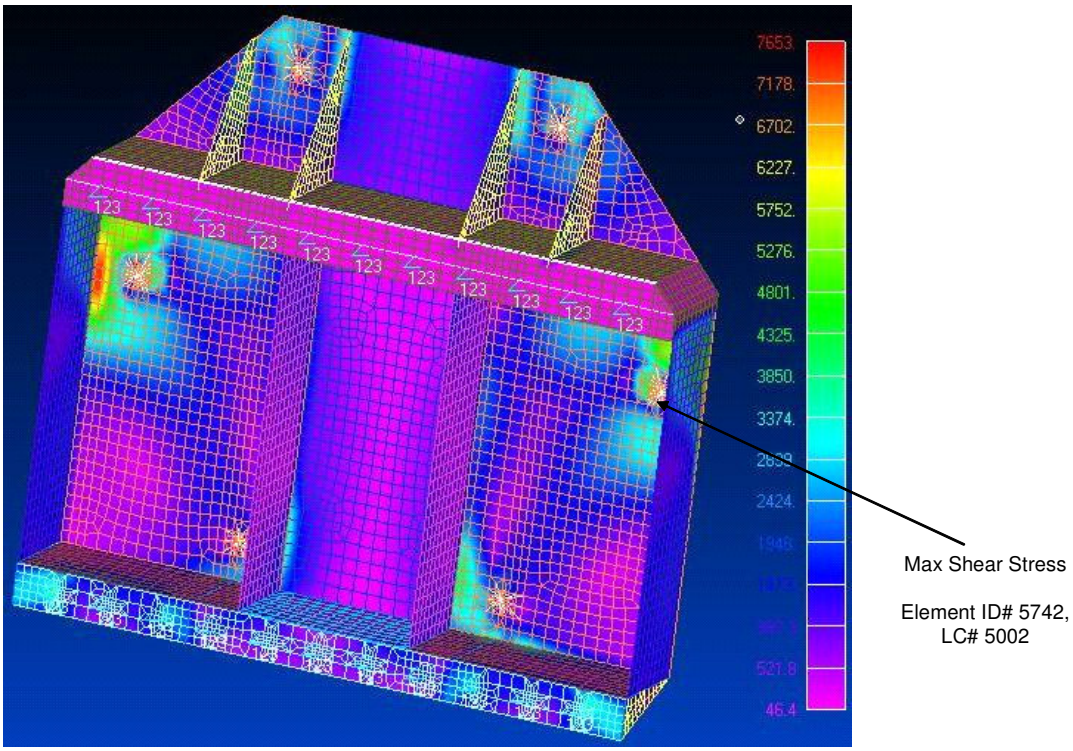

Figure 5.2-5 : Stress Contour Plot of Max. Shear Stress

5.3 Intentionally Left Blank

Intentionally Left Blank

5.4 FRGF Bracket

Margins of Safety

Table 5.4-1: Minimum Margin of Safety Summary

Part / Dwg Number	Part Name / Description	Material & Heat Treatment	Critical Load Condition	Failure Mode	Margin of Safety	Reference Page
SDG39135861	FRGF Bracket	AL ALY 7050-T7451	SRMS Induced Loads	Ultimate	0.498 (u)	5.4-12

Notes:

1. Factors of Safety are 2.0 for Ultimate and 1.25 for Yield.
2. Applied liftoff/landing loads, kickload, and SRMS induced loads.
3. u = ultimate

Factors of Safety

The hardware is designed with a yield factor of 1.25 and an ultimate factor of 2.0 against limit loads.

Description of Structure

Figure 5.4-1 below shows the locations of the FRGF brackets on the Upper USS-02. The brackets were machined out of 7050-T7451 Aluminum Alloy plate. The FRGF bracket bolts to the Upper USS-02 and the other side of FRGF bracket is used to bolt the FRGF.

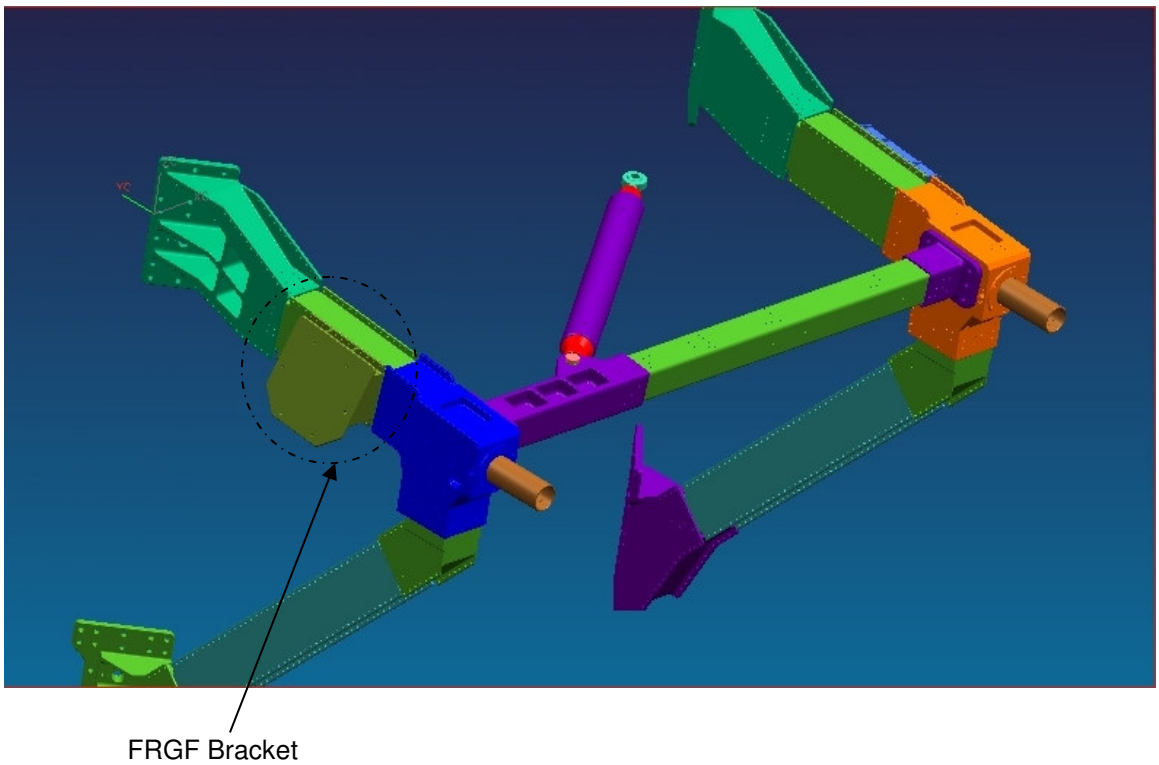

Figure 5.4-1 : Location of FRGF Brackets on Upper USS-02

Description of Model

A FEM model was built for the FRGF bracket hardware using FEMAP.

1. The part was modeled as CQUAD4 and CTRIA3 elements.
2. The bolt holes are represented with SPC's with DOF's 1, 2, 3, 4, 5, & 6.
3. The mass of the FRGF is represented by a mass element in the model. The interface between the FRGF and FRGF bracket is represented by a RBE2 rigid element with DOF's 3.

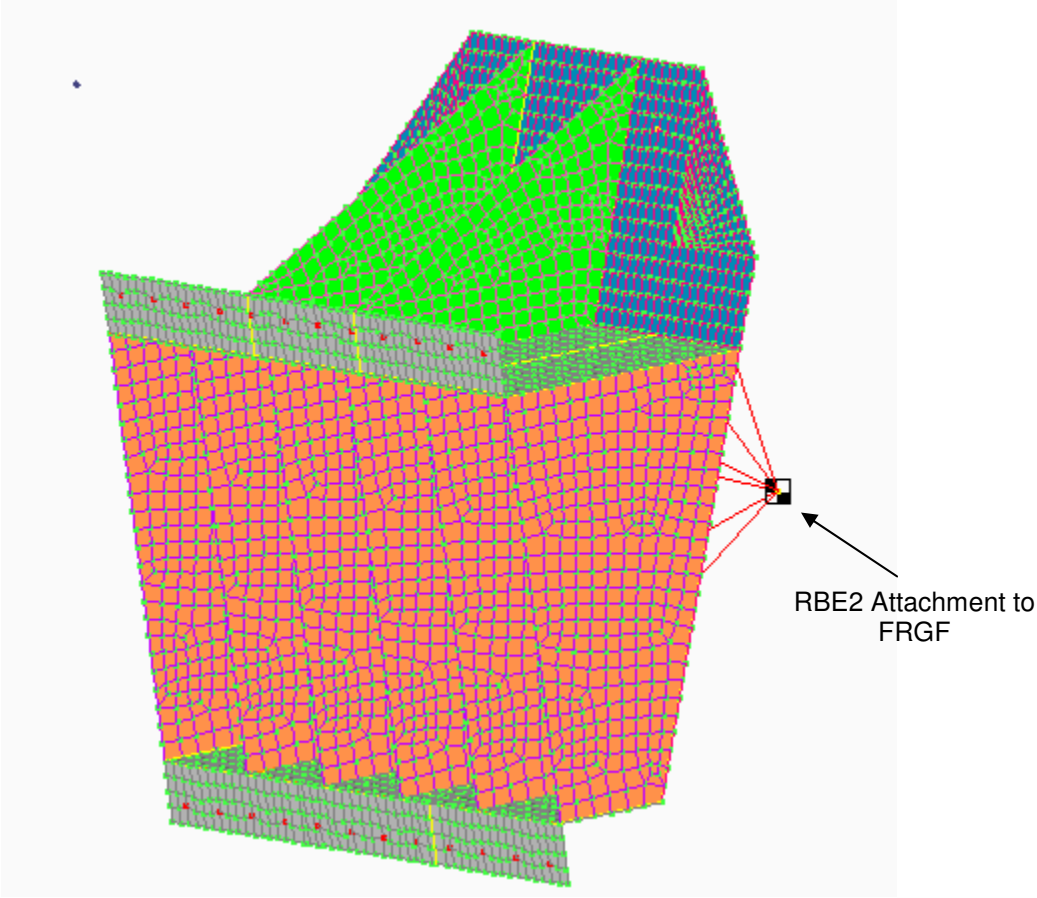

Figure 5.4-2 : FEMAP Model of FRGF Bracket

MSC/NASTRAN v.2005 was used as a solver for analyzing the math model of the FRGF bracket. Plate stresses were recovered and sorted to find the maximum of Principal, Von-Mises, and Shear in the FRGF Bracket. SPC forces were recovered at the bolt locations.

Table below shows detail of model inputs.

Table 5.4-2: Inputs of Finite Element Model of FRGF Bracket

DESCRIPTION	NODE #	ELEM #	PROP	MAT'L
FRGF Bracket	1001 – 11212	1197 – 20001	1-7	1-2 – 7050-T7451

Model Checks

Rigid body checks were performed using MSC/NASTRAN. Results are shown below. The KGG, KNN and KFF matrices all pass with low strain energies.

```
*** USER INFORMATION MESSAGE 7570 (GPWG1D)
     RESULTS OF RIGID BODY CHECKS OF MATRIX KGG      (G-SET)  FOLLOW:
     PRINT RESULTS IN ALL SIX DIRECTIONS AGAINST THE LIMIT OF   1.000000E-02
           DIRECTION        STRAIN ENERGY        PASS/FAIL
           ---------        -------------        ---------
             1               6.666596E-08          PASS
             2               1.009539E-07          PASS
             3               2.652087E-08          PASS
             4               4.962349E-07          PASS
             5               1.509545E-06          PASS
             6               1.158535E-06          PASS

*** USER INFORMATION MESSAGE 7570 (GPWG1D)
     RESULTS OF RIGID BODY CHECKS OF MATRIX KNN      (N-SET)  FOLLOW:
     PRINT RESULTS IN ALL SIX DIRECTIONS AGAINST THE LIMIT OF   1.000000E-02
           DIRECTION        STRAIN ENERGY        PASS/FAIL
           ---------        -------------        ---------
             1               6.985634E-08          PASS
             2               1.037590E-07          PASS
             3               2.662869E-08          PASS
             4               5.719806E-07          PASS
             5               1.525227E-06          PASS
             6               1.224789E-06          PASS

*** USER INFORMATION MESSAGE 7570 (GPWG1D)
     RESULTS OF RIGID BODY CHECKS OF MATRIX KFF      (F-SET)  FOLLOW:
     PRINT RESULTS IN ALL SIX DIRECTIONS AGAINST THE LIMIT OF   1.000000E-02
           DIRECTION        STRAIN ENERGY        PASS/FAIL
           ---------        -------------        ---------
             1               6.985634E-08          PASS
             2               1.037590E-07          PASS
             3               2.662869E-08          PASS
             4               5.719806E-07          PASS
             5               1.525227E-06          PASS
             6               1.224789E-06          PASS
```

```
*** USER INFORMATION MESSAGE 7570 (GPWG1D)
     RESULTS OF RIGID BODY CHECKS OF MATRIX KAA1      (A-SET)  FOLLOW:
     PRINT RESULTS IN ALL SIX DIRECTIONS AGAINST THE LIMIT OF   1.000000E-02
           DIRECTION        STRAIN ENERGY        PASS/FAIL
           ---------        -------------        ---------
             1               6.985634E-08          PASS
             2               1.037590E-07          PASS
             3               2.662869E-08          PASS
             4               5.719806E-07          PASS
             5               1.525227E-06          PASS
             6               1.224789E-06          PASS
```

A further check is that of rigid body modes. The first 10 unconstrained modes are shown below. There are six rigid body modes (~ 0.0), and then good separation with the first non-rigid body mode.

Table 5.4-3: Eigenvalue Summary of FRGF Bracket

REAL EIGENVALUES						
MODE NO.	EXTRACTION ORDER	EIGENVALUE	RADIANS	CYCLES	GENERALIZED MASS	GENERALIZED STIFFNESS
1	1	-5.575E-06	2.361E-03	3.758E-04	1.000E+00	-5.575E-06
2	2	-2.022E-06	1.422E-03	2.263E-04	1.000E+00	-2.022E-06
3	3	5.104E-07	7.144E-04	1.137E-04	1.000E+00	5.104E-07
4	4	1.289E-06	1.135E-03	1.807E-04	1.000E+00	1.289E-06
5	5	1.085E-05	3.293E-03	5.242E-04	1.000E+00	1.085E-05
6	6	1.697E-05	4.120E-03	6.557E-04	1.000E+00	1.697E-05
7	7	5.869E+07	7.661E+03	1.219E+03	1.000E+00	5.869E+07
8	8	9.386E+07	9.688E+03	1.542E+03	1.000E+00	9.386E+07
9	9	1.390E+08	1.179E+04	1.876E+03	1.000E+00	1.390E+08
10	10	1.425E+08	1.194E+04	1.900E+03	1.000E+00	1.425E+08

Additionally, the mass of the FEM (.0975603*g = 37.7 lb) matches closely the mass of the actual hardware (37.3 lb).

```
      DIRECTION
 MASS AXIS SYSTEM (S)     MASS              X-C.G.        Y-C.G.        Z-C.G.
         X            9.756033E-02     -6.223362E-16   5.999792E+00   6.355355E+00
         Y            9.756033E-02      5.846461E+00   1.706979E-15   6.355355E+00
         Z            9.756033E-02      5.846461E+00   5.999792E+00  -2.275972E-15
```

Material and Temperature

The FRGF bracket is made of 7050-T7451 Aluminum Alloy. Material properties of 7050-T7451 are taken from MMPDS-01. The temperature extremes for the FRGF bracket are -75 ^{o}F to 260 ^{o}F.

Analysis

The critical stresses for the FRGF bracket are compared to the ultimate and yield strength of 7050-T7451 Aluminum Alloy. The FRGF bracket was analyzed for liftoff/landing loads, 125 lb kickload, and SRMS induced loads. All margins of safety are positive.

CHECK OF FRGF BRACKET

Material Properties : 7050-T7451 AL ALY *(Ref. MMPDS-01, Table 3.7.4.0(b_1) or* BMS 7-323C*)*

$F_{tu} := 66000 \cdot psi$

$F_{ty} := 57000 \cdot psi$

$F_{su} := 43000 \cdot psi$

Factors of Safety, $FS_u := 2.0$ $FS_y := 1.25$

Temperature reduction factors,

+ At 260°F: (For FRGF, the temperature extremes are -75°F to 260°F)

- Ultimate: $\beta_{u1} := 0.78$ *(Ref. MMPDS-01, Figure 3.7.4.2.1)*

- Yield: $\beta_{y1} := 0.86$ *(Ref. MMPDS-01, Figure 3.7.4.2.1)*

Allowable stresses:

$F_{tu1.a} := \beta_{u1} \cdot F_{tu}$

$F_{tu1.a} = 51480\, psi$

$F_{ty1.a} := \beta_{y1} \cdot F_{ty}$

$F_{ty1.a} = 49020\, psi$

$F_{su1.a} := \beta_{u1} \cdot F_{su}$

$F_{su1.a} = 33540\, psi$

Applying Simplified Design Loads from AMS-02 SVP (Table 4-4) for Liftoff and Landing Loads

Maximum Von-Mises, principal, and shear stresses of plate elements are selected from 24 load cases. The launch/landing design limit load factors for small secondary structures were used in this analysis. Using Table 4-4 from document JSC 28792, a load factor of 40g was obtained (since the mass of the FRGF bracket is less than 20 lb). This load factor was applied in all three axis, with a load factor of 25% of the primary load applied to the remaining two orthogonal axes, simultanously. NASPOST V.2.1 is used to sort out the maximum stresses within the load cases.

Load Case	X-axis Load Factor	Y-axis Load Factor	Z-axis Load Factor
1001	40	10	10
1002	40	-10	10
1003	40	-10	-10
1004	40	10	-10
1005	-40	10	10
1006	-40	-10	10
1007	-40	10	-10
1008	-40	-10	-10
1009	10	40	10
1010	10	-40	10
1011	10	-40	-10
1012	10	40	-10
1013	-10	40	10
1014	-10	-40	10
1015	-10	40	-10
1016	-10	-40	-10
1017	10	10	40
1018	10	-10	40
1019	10	-10	-40
1020	10	10	-40
1021	-10	10	40
1022	-10	-10	40
1023	-10	10	-40
1024	-10	-10	-40

$u_{uu.max} := 8912.17 \cdot psi$ *LC# 1016, ELEM# 5742* *(Maximum Principal Stress)*

(See Appendix A23, p.A23-9)

$u_{uy.max} := 7897.83 \cdot psi$ *LC# 1016, ELEM# 5742* *(Maximum Von-Mises Stress)*

(See Appendix A23, p.A23-12)

$u_{us.max} := 4456.09 \cdot psi$ *LC# 1016; ELEM# 5742* *(Maximum Shear Stress)*

(see Appendix A23, p.A23-14)

Margins of Safety,

$$MS_{u1} := \frac{F_{tu1.a}}{FS_u \cdot u_{uu.max}} - 1 \qquad MS_{u1} = 1.888$$

$$MS_{y1} := \frac{F_{ty1.a}}{FS_y \cdot u_{uy.max}} - 1 \qquad MS_{y1} = 3.97$$

$$MS_{s1} := \frac{F_{su1.a}}{FS_u \cdot u_{us.max}} - 1 \qquad MS_{s1} = 2.76$$

Applying 125 lb Kickload

Maximum Von-Mises, principal, and shear stresses of plate elements are selected from the 125 lb kickload cases. The kickload was applied on the side of the FRGF bracket since it was the largest unsupported area in the bracket. NASPOST V.2.1 is used to sort out the maximum stresses within the load cases.

Load Case	Node Where Load is Applied	Fx	Fy	Fz
4001	3313	125	0	0
4002	3313	0	-125	0
4003	3313	0	0	125
4004	2997	125	0	0
4005	2997	0	125	0
4006	2997	0	0	125

$u_{uu1.max} := 3288.38 \cdot psi$ *LC# 4005, ELEM# 7082* *(Maximum Principal Stress)*

(See Appendix A23, p.A23-22)

$u_{uy1.max} := 2917.95 \cdot psi$ *LC# 4005, ELEM# 7082* *(Maximum Von-Mises Stress)*

(See Appendix A23, p.A23-24)

$u_{us1.max} := 1644.19 \cdot psi$ *LC# 4005; ELEM# 7082* *(Maximum Shear Stress)*

(see Appendix A23, p.A23-26)

Margins of Safety,

$$MS_{u1} := \frac{F_{tu1.a}}{FS_u \cdot u_{uu1.max}} - 1 \qquad MS_{u1} = 6.828$$

$$MS_{y1} := \frac{F_{ty1.a}}{FS_y \cdot u_{uy1.max}} - 1 \qquad MS_{y1} = 12.44$$

$$MS_{s1} := \frac{F_{su1.a}}{FS_u \cdot u_{us1.max}} - 1 \qquad MS_{s1} = 9.20$$

Applying SRMS Induced Loads from NSTS-21000-IDD-ISS (Section 14.4.5.1.4.1)

Maximum Von-Mises, principal, and shear stresses of plate elements are selected from 2 load cases. The design loads given in section 14.4.5.1.4.1 of document NSTS-21000-IDD-ISS were used in this analysis. NASPOST V.2.1 is used to sort out the maximum stresses within the load cases.

Load Case	Torsion Moment (in-lb)	Bending Moment (in-lb)	Shear Force (lb)	Axial Force (lb)
5001	8400	10800	150	150
5002	5400	14400	150	0

$u_{uu2.max} := 17187.36 \cdot psi$ *LC# 5002, ELEM# 5742* *(Maximum Principal Stress)*

(See Appendix A23, p.A23-34)

$u_{uy2.max} := 15334.17 \cdot psi$ *LC# 5002, ELEM# 5742* *(Maximum Von-Mises Stress)*

(See Appendix A23, p.A23-36)

$u_{us2.max} := 8593.68 \cdot psi$ *LC# 5002; ELEM# 5742* *(Maximum Shear Stress)*

(see Appendix A23, p.A23-38)

Margins of Safety,

$$MS_{u1} := \frac{F_{tu1.a}}{FS_u \cdot u_{uu2.max}} - 1 \qquad MS_{u1} = 0.498$$

$$MS_{y1} := \frac{F_{ty1.a}}{FS_y \cdot u_{uy2.max}} - 1 \qquad MS_{y1} = 1.56$$

$$MS_{s1} := \frac{F_{su1.a}}{FS_u \cdot u_{us2.max}} - 1 \qquad MS_{s1} = 0.95$$

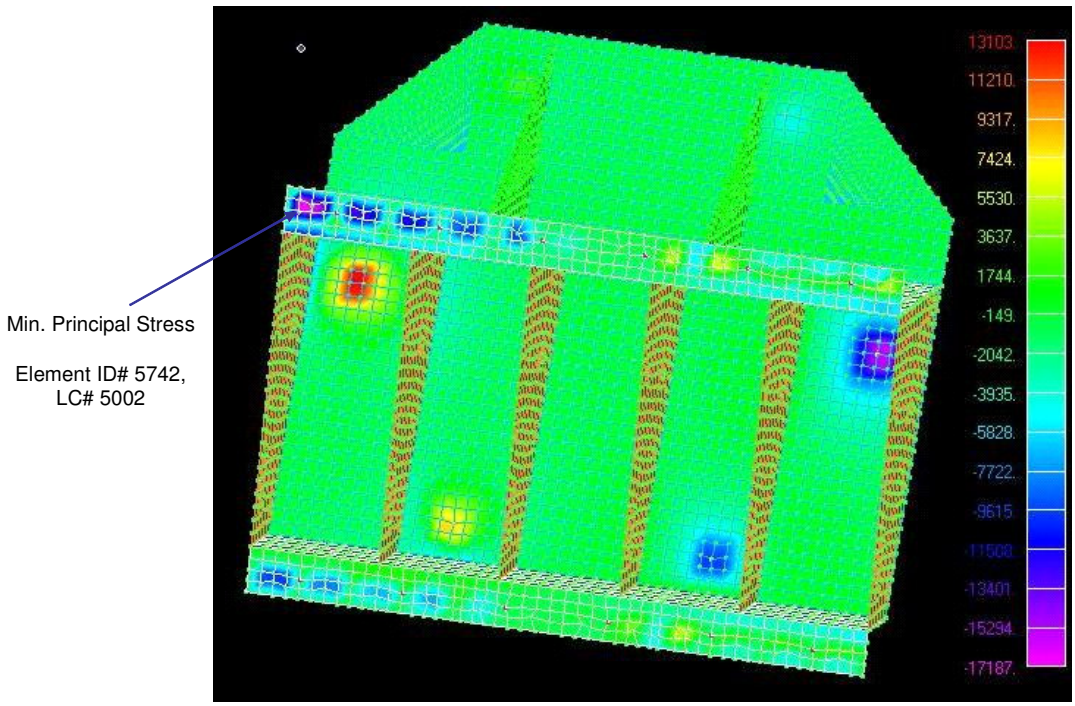

Figure 5.4-3 : Stress Contour Plot of Minimum Principal Stress

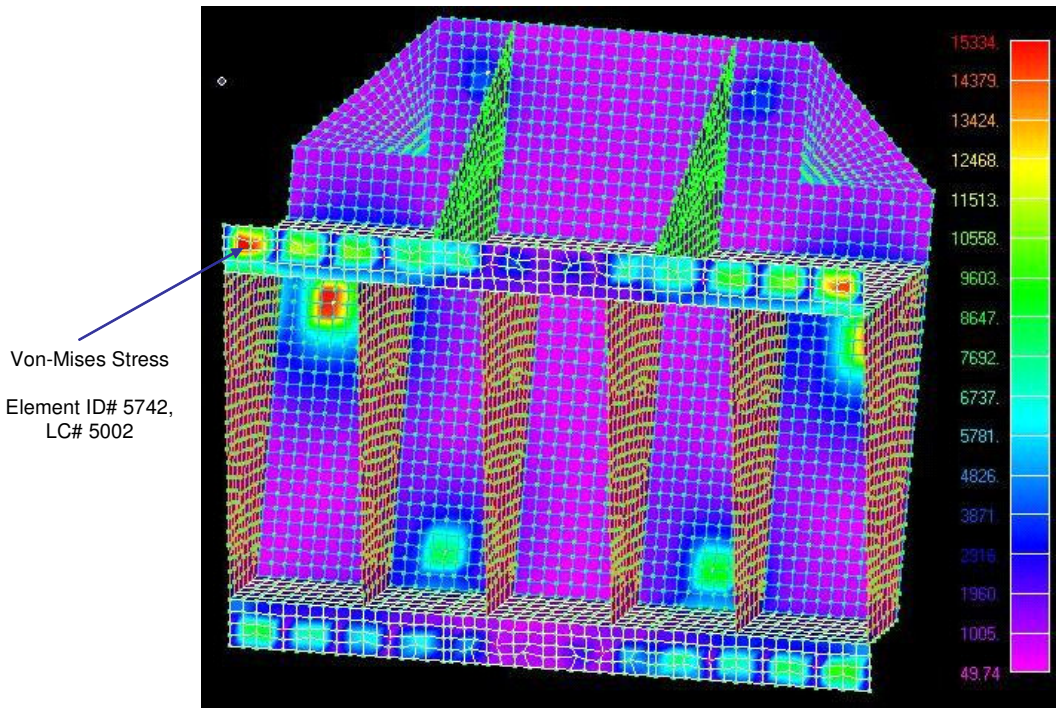

Figure 5.4-4 : Stress Contour Plot of Von Mises Stress

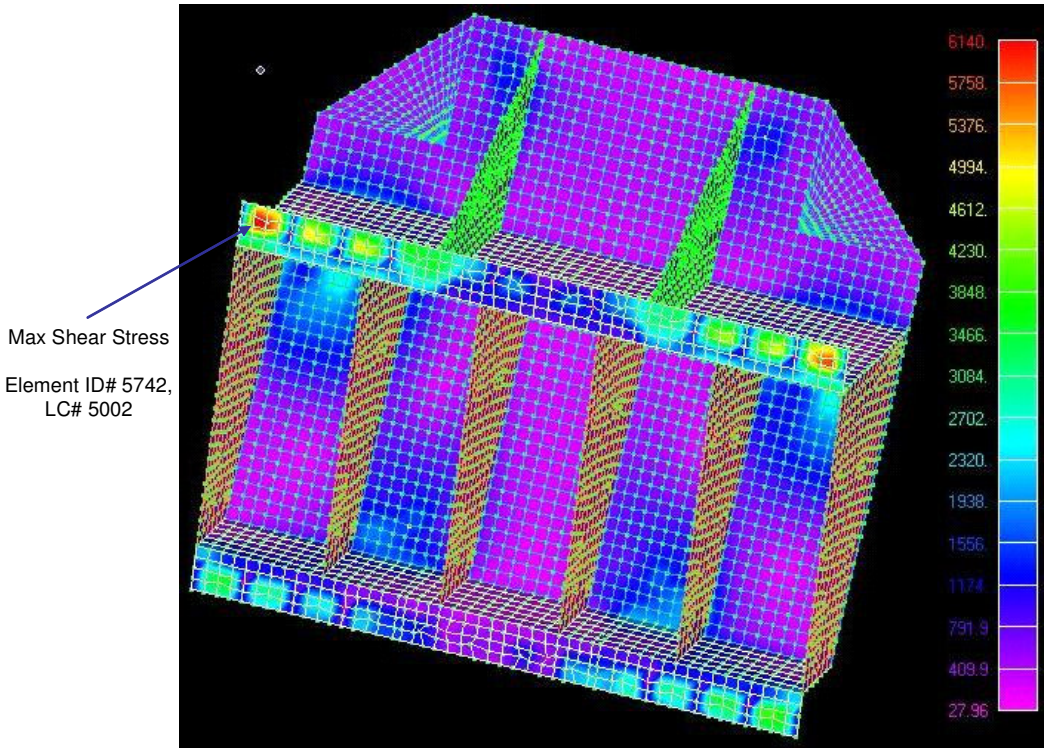

Figure 5.4-5 : Stress Contour Plot of Max. Shear Stress

5.5 ROEU Assembly

Section 5.5 ROEU Assembly

The ROEU Assembly Analysis is performed in the following report sections. These sections include analysis of the ROEU Assembly and the fastener analysis.

5.5.1	ROEU Clevis Assembly Bending Analysis
5.11.6.1	ROEU Arm Flange to Sill Joint
5.11.6.1	ROEU Arm Flange to Sill Joint (Fail-Safe)
5.11.6.2	ROEU Bearing Failure Analysis
5.11.6.3	ROEU PDA Bracket, Pin, and Lug Analysis
5.11.6.4	ROEU Assembly Harness Bracket and Bolt Analysis

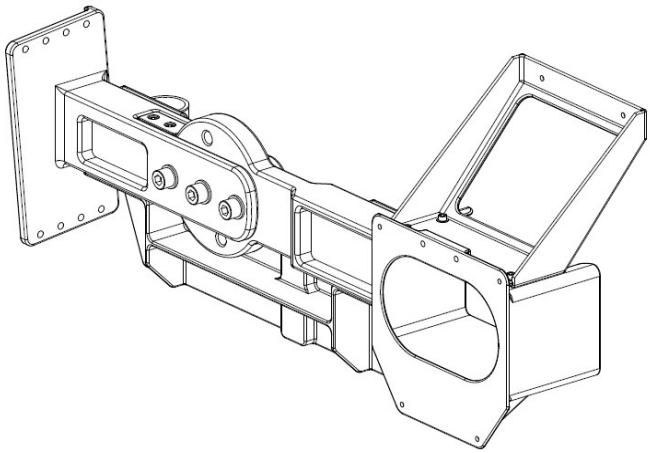

5.5.1 ROEU Clevis Assembly Bending Analysis

Section 5.5.1 ROEU/USS Interface

Foldable ROEU Clevis Assembly Bending Analysis

Part no.: SEG39137677

The following provides bending analysis at various cross sections of the ROEU Clevis Assembly. Stresses were determined at cross sections ranging from 2.4 in. to 6.29 in. from the clevis flange. Dimensions were obtained from drawing number SEG39137676.

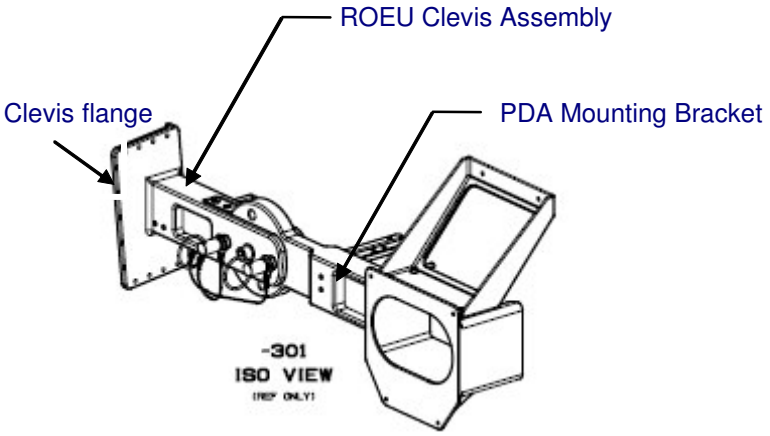

View of ROEU Assembly SEG39137677

Note: Unless otherwise stated, "Ref. MMPDS" refers to MMPDS-01

Location of the Centroid of the Fastener Group

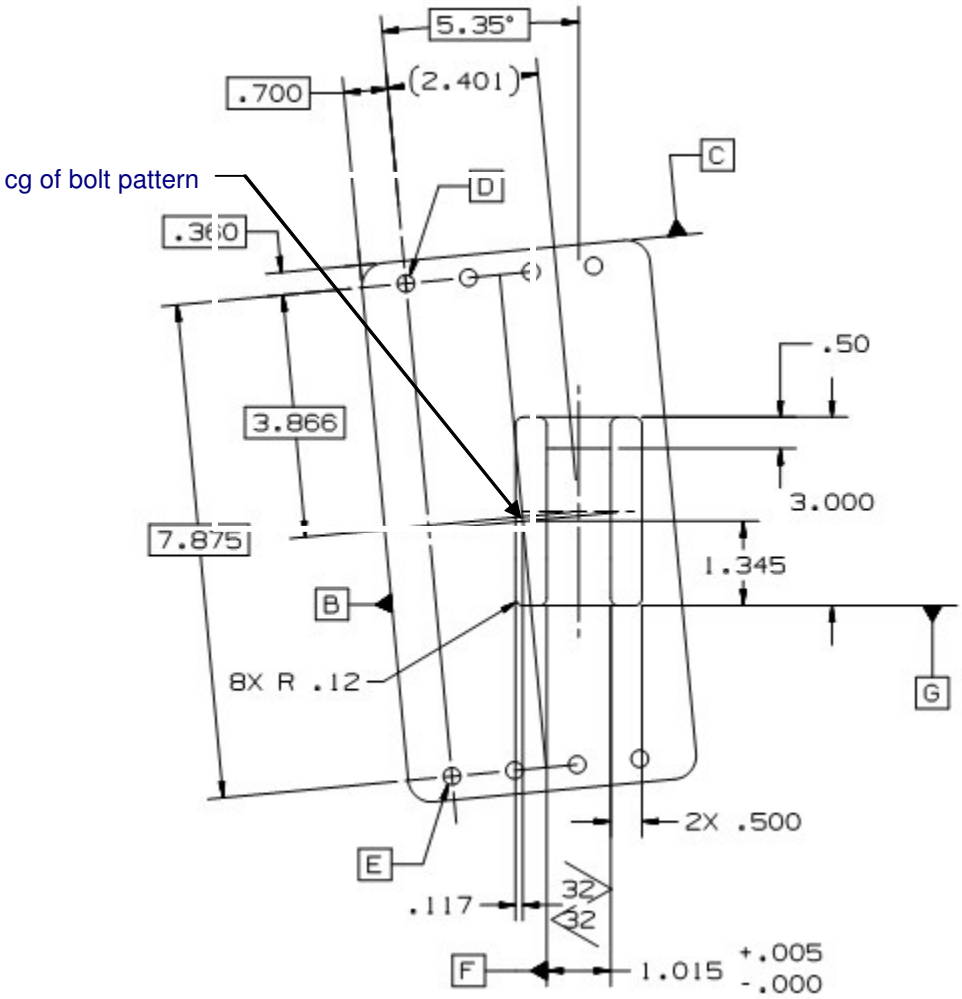

cg of bolt pattern located 0.117 in. right and 1.345 in. above the lower left corner of the clevis.

Material properties of the SDG39137676 - 001 ROEU Clevis -11.99 x 8.61 x 4.60
7050-T7451, BMS-7-323C:

Tensile allowable, ultimate ST: $Ftu := 67000 \cdot psi$

Yield ST: $Fty := 57000 \cdot psi$

Shear allowable: $Fsu := 43000 \cdot psi$

(Ref. MMPDS-03, Table 3.7.4.0(b1), 7050-T7451, AMS4050, Plate, 4-5", A)

Factors of safety: $FSu := 2.0$ (ultimate) $FSy := 1.25$ (yield)

Location of Applied Forces and Moments

The loads information was obtained from the loads group. The load cases are comprised of launch and abort landing load cases. Loads model 2-06 was used to retrieve loads. The data recovered are the MPC forces for node 9900, which represents the end of the CBUSH connected to the beam. These loads are recovered in the global coordinate system at the center of gravity of the bolt pattern. The origin of the local coordinate system is at the centroid of the cross section. Post processing was performed in NASPOST for forces and moments in the global x, y, and z directions. These loads are read into an array and transferred to the center of gravity of the minimum cross section of the ROEU clevis flange. This requires a 180 degree counterclockwise rotation.

Position Vector - rvec (x_G, y_G, z_G) represents the components of the position vector measured from the centroid of the various cross sections of the clevis to the cg of the bolt pattern on the ROEU clevis flange. See drawing no. SEG39137676 for dimensions.

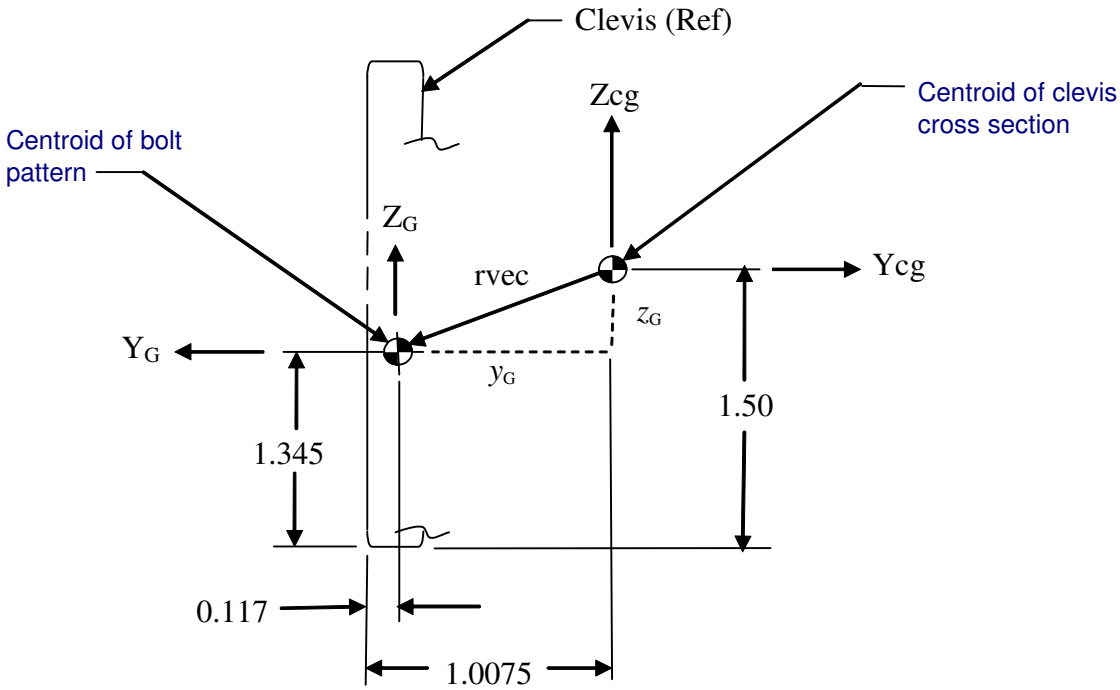

Relationship of Centroid of Cross Sections to Centroid of Bolt Pattern (clevis flange not shown for clarity and dimensions shown are at clevis flange)

Reading NASPOST file for loads

data := READPRN("Input_forces_ROEU_uss_3_6_07.txt")

$i := 1 .. \text{rows}(data)$ $\quad$ $\text{rows}(data) = 128$ $\quad$ $\text{cols}(data) = 8$

* Note: the "Input_forces_ROEU_uss_3_6_07.txt" data file was generated from the NASPOST result (.LIS file) by removing all words and comments. This file is archived along with the other analysis files.

Loads From 2-06 Loads Model, Launch, and Abort Landing Case

Element Identification $\quad ID_i := data_{i,1}$

Load Case Number $\quad LC_i := data_{i,2}$

Axial Load $\quad Fx_i := data_{i,3} \cdot lbf$ $\quad$ Torsion $\quad Mx_i := data_{i,6} \cdot in \cdot lbf$

Shear in Y axis $\quad Fy_i := data_{i,4} \cdot lbf$ $\quad$ Moment about Y axis $\quad My_i := data_{i,7} \cdot in \cdot lbf$

Shear in Z axis $\quad Fz_i := data_{i,5} \cdot lbf$ $\quad$ Moment about Z axis $\quad Mz_i := data_{i,8} \cdot in \cdot lbf$

Rotation of Coordinate System of Loads For Alignment With Coordinate System at Centroid of Cross Section

The loads are recovered in the global coordinate system at the cg of the bolt pattern. The forces and moments are transformed to the local coordinate system at the centroid of the clevis cross sections by a 180 degree ccw rotation about the global Z axis.

$$\beta := 180 \cdot deg \qquad Ftransform := \begin{pmatrix} \cos(\beta) & -\sin(\beta) & 0 \\ \sin(\beta) & \cos(\beta) & 0 \\ 0 & 0 & 1 \end{pmatrix} \qquad Ftransform = \begin{pmatrix} -1 & 0 & 0 \\ 0 & -1 & 0 \\ 0 & 0 & 1 \end{pmatrix}$$

$Flocal := (\text{augment}(Fx, Fy, Fz)) \cdot Ftransform$

$Fx := Flocal^{\langle 1 \rangle} \qquad Fy := Flocal^{\langle 2 \rangle} \qquad Fz := Flocal^{\langle 3 \rangle}$

$Mlocal := (\text{augment}(Mx, My, Mz)) \cdot Ftransform$

$Mx := Mlocal^{\langle 1 \rangle} \qquad My := Mlocal^{\langle 2 \rangle} \qquad Mz := Mlocal^{\langle 3 \rangle}$

Section Properties: The properties of this clevis cross section are valid from a distance of 2.50 in. to 4.50 in. from the clevis flange. The cross section is an I-beam shape. All dimensions were obtained from drawing no. SEG39137676. The properties of the cross section were obtained from Excel data (see attached).

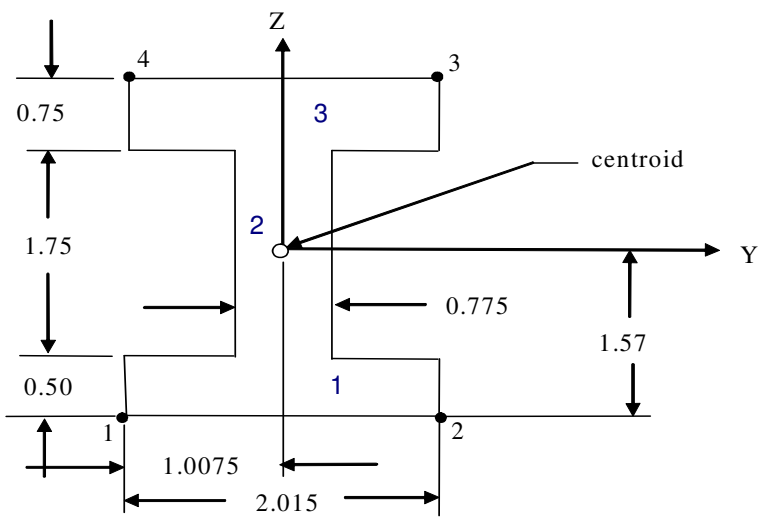

At 2.5 inches from the clevis flange:

Area of cross section: $Area := 3.875 \cdot in^2$ $\quad Area25 := Area$

Distance from centroid to outer fiber:

$$cz25 := \begin{pmatrix} -1.57 \\ -1.57 \\ 1.43 \\ 1.43 \end{pmatrix} \cdot in \qquad cy25 := \begin{pmatrix} -1.0075 \\ 1.0075 \\ 1.0075 \\ -1.0075 \end{pmatrix} \cdot in \qquad points := \begin{pmatrix} 1 \\ 2 \\ 3 \\ 4 \end{pmatrix}$$

Moments of inertia about centroid: $Iy25 := 3.9271 \cdot in^4$ $\quad Iz25 := 0.9201 \cdot in^4$ $\quad s := 1 .. rows(points)$

Centroid of bolt pattern in local coordinates:

$$cgglobal := \begin{pmatrix} -2.5 \\ -.890 \\ -.225 \end{pmatrix} \cdot in$$

rcs represents the origin of the local coordinate system, Xcg, Ycg, Zcg located at the centroid of the cross section.

$$r_{cs} := \begin{pmatrix} 0 \\ 0 \\ 0 \end{pmatrix} \qquad r_{vec} := cgglobal - r_{cs} \qquad r_{vec} = \begin{pmatrix} -2.5 \\ -0.89 \\ -0.225 \end{pmatrix} in$$

Moment Distribution

$$M_{tot}^{\langle i \rangle} := \begin{pmatrix} Mx_i \\ My_i \\ Mz_i \end{pmatrix} + r_{vec} \times \begin{pmatrix} Fx_i \\ Fy_i \\ Fz_i \end{pmatrix} \qquad Mx_cs_i := M_{tot_{1,i}} \qquad My_cs_i := M_{tot_{2,i}} \qquad Mz_cs_i := M_{tot_{3,i}}$$

$$T := Mx_cs$$

$$t_1 := 0.50 \cdot in \qquad t_2 := 0.775 \cdot in \qquad t_3 := 0.75 \cdot in \qquad b_1 := 2.015 \cdot in \qquad b_2 := 1.75 \cdot in \qquad b_3 := 2.015 \cdot in$$

Stresses on cross section:

Normal is direct axial plus bending:

$$u_{i,s} := \frac{Fx_i}{Area25} + \frac{My_cs_i \cdot cz25_s}{Iy25} - \frac{Mz_cs_i \cdot cy25_s}{Iz25} \qquad \max(u) = 4046\,psi$$

$$\min(u) = -4234\,psi$$

Shear due to transverse loading

$$v_{i,s} := \sqrt{\left(\frac{Fy_i}{Area}\right)^2 + \left(\frac{Fz_i}{Area}\right)^2} \qquad \max(\ v) = 145\,psi$$

Shear due to torsion:

The torsional shear stress will be largest in the thickest element of the cross section.

$$=_{min} := .246 \qquad =_{max} := .258 \qquad bt_{min} := 2.00 \qquad bt_{max} := 2.50 \qquad bt := \frac{b_2}{t_2}$$

$$=:= =_{min} + \frac{(bt - bt_{min}) \cdot (=_{max} - =_{min})}{bt_{max} - bt_{min}} \qquad == 0.252$$

Ref: Bruhn, Table A6.1

$$t_i := \frac{T_i \cdot t_2}{=\left(b_1 \cdot t_1^3 + b_2 \cdot t_2^3 + b_3 \cdot t_3^3\right)}$$

Ref:Bruhn, p.A6.4

$$\max(\ t) = 369\,psi$$

Combined shear:

$$_{i,s} := v_{i,s} + t_i \qquad \max(\ t) = 369\,psi \qquad \max(\ ) = 448\,psi$$

Principal Stresses:

$$u1p_{i,s} := \frac{u_{i,s}}{2} + \left[\left(\frac{u_{i,s}}{2}\right)^2 + \left(\ _{i,s}\right)^2\right]^{\frac{1}{2}}$$

$\max(u1p) = 4066\,psi$

$$u2p_{i,s} := \frac{u_{i,s}}{2} - \left[\left(\frac{u_{i,s}}{2}\right)^2 + \left(\ _{i,s}\right)^2\right]^{\frac{1}{2}}$$

$\min(u2p) = -4253\,psi$

Maximum principal stress is:

$$umax_{i,s} := \begin{cases} u1p_{i,s} & \text{if } \left|u1p_{i,s}\right| \ge \left|u2p_{i,s}\right| \\ \left|u2p_{i,s}\right| & \text{otherwise} \end{cases}$$

$\max(umax) = 4253\,psi$

Von-Mises Stress:

$$uvm_{i,s} := \sqrt{\left(u1p_{i,s}\right)^2 + \left(u2p_{i,s}\right)^2 - u1p_{i,s}\cdot u2p_{i,s}}$$

$\max(uvm) = 4262\,psi$

Maximum shear:

$$max_{i,s} := \sqrt{\frac{1}{4}\cdot\left(u_{i,s}\right)^2 + \left(\ _{i,s}\right)^2}$$

$\max(\ \ max) = 2136\,psi$

Margins of safety:

Ultimate

$$MSu_{i,s} := \begin{cases} \dfrac{Ftu}{FSu\cdot umax_{i,s}} - 1 & \text{if } umax_{i,s} \ne 0\cdot psi \\ 10000 & \text{otherwise} \end{cases}$$

$\min(MSu) = 6.88$

Ultimate, shear

$$MSsu_{i,s} := \begin{cases} \left(\dfrac{Fsu}{FSu\cdot\ max_{i,s}}\right) - 1 & \text{if } max_{i,s} \ne 0\cdot psi \\ 10000 & \text{otherwise} \end{cases}$$

$\min(MSsu) = 9.07$

Yield
(using von-Mises)

$$MSy_{i,s} := \begin{cases} \left(\dfrac{Fty}{FSy\cdot uvm_{i,s}}\right) - 1 & \text{if } uvm_{i,s} \ne 0\cdot psi \\ 10000 & \text{otherwise} \end{cases}$$

$\min(MSy) = 9.7$

Element ID, LC and Forces/Moments for Minimum Margin Cases

For each load case four margins of safety were determined for ultimate, shear, and yield. To display the minimum margin of safety for all load cases, the minimum margin of safety for each load case must be determined initially.

Place the minimum margin of safety for each load case in matrices MSu, MSsu, and MSy in each row of MSminu, MSminsu, and MSminy, respectively, forming a single column.

$$MSminu_i := \min\left[\left(MSu^T\right)^{\langle i\rangle}\right] \qquad MSminsu_i := \min\left[\left(MSsu^T\right)^{\langle i\rangle}\right] \qquad MSminy_i := \min\left[\left(MSy^T\right)^{\langle i\rangle}\right]$$

Create output file, Output2, of Element ID, Load Case, Forces and Moments corresponding to the minimum margins of safety.

$$Output2 := augment\left(ID, LC, \frac{Fx}{lbf}, \frac{Fy}{lbf}, \frac{Fz}{lbf}, \frac{Mx}{in\cdot lbf}, \frac{My}{in\cdot lbf}, \frac{Mz}{in\cdot lbf}, MSminu, MSminsu, MSminy\right)$$

Rearrange the rows of Output2 until the columns containing the margins of safety are in ascending order. Transpose the result and select the first column. Transposing the result a second time places the output in row order.

$$MS_min := augment\left[\left(csort(Output2, 9)^T\right)^{\langle 1\rangle}, \left(csort(Output2, 10)^T\right)^{\langle 1\rangle}, \left(csort(Output2, 11)^T\right)^{\langle 1\rangle}\right]^T$$

$$MS_min = \begin{array}{c} \begin{array}{ccccccccccc} ID & LC & Fx & Fy & Fz & Mx & My & Mz & MS\ minu & MS\ minsu & MS\ miny \end{array} \\ \begin{pmatrix} 9900 & 2048 & 98.753 & -115.072 & -551.52 & -732.713 & 8097.33 & -1820.659 & 6.877 & 9.066 & 9.698 \\ 9900 & 2048 & 98.753 & -115.072 & -551.52 & -732.713 & 8097.33 & -1820.659 & 6.877 & 9.066 & 9.698 \\ 9900 & 2048 & 98.753 & -115.072 & -551.52 & -732.713 & 8097.33 & -1820.659 & 6.877 & 9.066 & 9.698 \end{pmatrix} \end{array}$$

$MS_min_ID := MS_min_{1,1}$ $\qquad MS_min_Fy := MS_min_{1,4}$ $\qquad MS_min_My := MS_min_{1,7}$

$MS_min_LC := MS_min_{1,2}$ $\qquad MS_min_Fz := MS_min_{1,5}$ $\qquad MS_min_Mz := MS_min_{1,8}$

$MS_min_Fx := MS_min_{1,3}$ $\qquad MS_min_T := MS_min_{1,6}$

Identifying Element ID Number, Load Case Number, and Loads for Minimum Margins of Safety Determined on Page 5.5.1-8.

$MS_min_ID = 9900$ Element Identification for Minimum Margin

$MS_min_LC = 2048$ Load Case Number for Minimum Margin

$MS_min_Fx = 98.75288$ Axial Load

$MS_min_Fy = -115.072$ Shear in Y axis

$MS_min_Fz = -551.5204$ Shear in Z axis

$MS_min_T = -732.7131$ Torsion

$MS_min_My = 8097.33$ Moment about Y axis

$MS_min_Mz = -1820.659$ Moment about Z axis

Cross Section at 4.50 in. From the Clevis Flange

The properties of this cross section are the same as at a distance of 2.50 in. from the clevis flange. Only the position vector is different.

Position Vector - rvec2, represents the components of the position vector measured from the centroid of the cross section of the ROEU clevis at 4.5 inches from the clevis flange to the point of application of the forces and moments at the cg of the bolt pattern.

At 4.50 inches from the clevis flange:

rcs2 represents the origin of the local coordinate system, Xcg, Ycg, Zcg located at the centroid of the cross section.

Centroid of bolt pattern in local coordinates: $cgglobal := \begin{pmatrix} -4.5 \\ -.890 \\ -.225 \end{pmatrix} \cdot in$

$r_{cs2} := \begin{pmatrix} 0 \\ 0 \\ 0 \end{pmatrix}$ $\quad r_{vec2} := cgglobal - r_{cs2}$ $\quad r_{vec2} = \begin{pmatrix} -4.5 \\ -0.89 \\ -0.225 \end{pmatrix} in$

Moment Distribution

$$M_{tot}^{\langle i \rangle} := \begin{pmatrix} Mx_i \\ My_i \\ Mz_i \end{pmatrix} + r_{vec2} \times \begin{pmatrix} Fx_i \\ Fy_i \\ Fz_i \end{pmatrix}$$

$$My_cs2_i := M_{tot_{2,i}} \qquad Mz_cs2_i := M_{tot_{3,i}}$$

$$Mx_cs2_i := M_{tot_{1,i}}$$

Section Properties: The cross section properties are determined at a distance of 4.50 in. from the clevis flange. All dimensions were obtained from drawing no. SEG39137676. The properties of the cross section were obtained from Excel data (see attached).

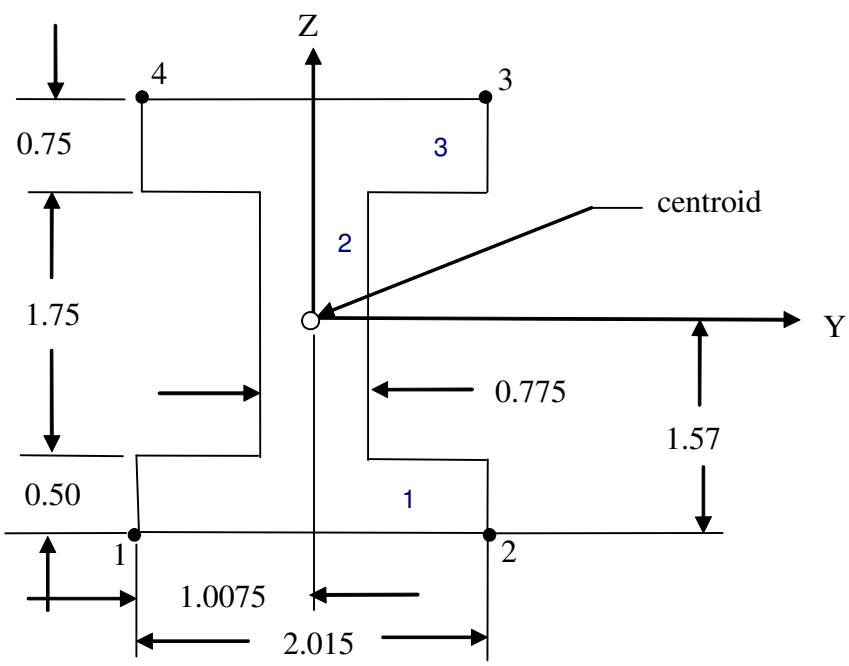

Distance from centroid to outer fiber:

Area: $Area45 := 3.875 \cdot in^2$

$$cz45 := \begin{pmatrix} -1.57 \\ -1.57 \\ 1.43 \\ 1.43 \end{pmatrix} \cdot in \qquad cy45 := \begin{pmatrix} -1.0075 \\ 1.0075 \\ 1.0075 \\ -1.0075 \end{pmatrix} \cdot in \qquad points := \begin{pmatrix} 1 \\ 2 \\ 3 \\ 4 \end{pmatrix}$$

Moments of inertia about centroid: $Iy45 := 3.9271 \cdot in^4$ $\quad Iz45 := 0.9201 \cdot in^4$ $\quad s := 1 .. rows(points)$

$t_1 := 0.50 \cdot in$ $\quad t_2 := 0.775 \cdot in$ $\quad t_3 := 0.75 \cdot in$ $\quad b_1 := 2.015 \cdot in$ $\quad b_2 := 1.75 \cdot in$ $\quad b_3 := 2.015 \cdot in$

$T := Mx_cs2$

Stresses on cross section:

Normal is direct axial plus bending:

$$u2_{i,s} := \frac{Fx_i}{Area45} + \frac{My_cs2_i \cdot cz45_s}{Iy45} - \frac{Mz_cs2_i \cdot cy45_s}{Iz45}$$

$max(u2) = 3393\,psi$ $\quad min(u2) = -3541\,psi$

Shear due to transverse loading

$$v_{i,s} := \sqrt{\left(\frac{Fy_i}{Area}\right)^2 + \left(\frac{Fz_i}{Area}\right)^2}$$

$max(v) = 145\,psi$

Shear due to torsion :

The torsional shear stress will be largest in the thickest element of the cross section.

$=_{min} := .246$ $\quad =_{max} := .258$ $\quad bt_{min} := 2.00$ $\quad bt_{max} := 2.50$ $\quad bt := \frac{b_2}{t_2}$

$$=:= =_{min} + \frac{(bt - bt_{min}) \cdot (=_{max} - =_{min})}{bt_{max} - bt_{min}} \qquad = = 0.252$$

Ref: Bruhn, Table A6.1

$$t_i := \frac{T_i \cdot t_2}{=\left(b_1 \cdot t_1^3 + b_2 \cdot t_2^3 + b_3 \cdot t_3^3\right)}$$

Ref: Bruhn, p.A6.4

$max(t) = 368.631\,psi$

Combined shear: $_{i,s} := v_{i,s} + t_i$ $\quad$ max(t) = 369 psi $\quad$ max( ) = 448 psi

Principal Stresses:

$$u1p_{i,s} := \frac{u2_{i,s}}{2} + \left[\left(\frac{u2_{i,s}}{2}\right)^2 + \left(_{i,s}\right)^2\right]^{\frac{1}{2}}$$ max(u1p) = 3416 psi

$$u2p_{i,s} := \frac{u2_{i,s}}{2} - \left[\left(\frac{u2_{i,s}}{2}\right)^2 + \left(_{i,s}\right)^2\right]^{\frac{1}{2}}$$ min(u2p) = −3564 psi

Maximum principal stress is:

$$umax_{i,s} := \begin{cases} u1p_{i,s} & \text{if } \left|u1p_{i,s}\right| \ge \left|u2p_{i,s}\right| \\ \left|u2p_{i,s}\right| & \text{otherwise} \end{cases}$$ max(umax) = 3564 psi

Von-Mises Stress:

$$uvm_{i,s} := \sqrt{\left(u1p_{i,s}\right)^2 + \left(u2p_{i,s}\right)^2 - u1p_{i,s}\cdot u2p_{i,s}}$$ max(uvm) = 3575 psi

Maximum shear:

$$max_{i,s} := \sqrt{\frac{1}{4}\cdot\left(u2_{i,s}\right)^2 + \left(_{i,s}\right)^2}$$ max(max) = 1793 psi

Margins of safety:

Ultimate

$$MSu_{i,s} := \begin{cases} \dfrac{Ftu}{FSu\cdot umax_{i,s}} - 1 & \text{if } umax_{i,s} \ne 0\cdot psi \\ 10000 & \text{otherwise} \end{cases}$$ min(MSu) = 8.4

Ultimate, shear

$$MSsu_{i,s} := \begin{cases} \left(\dfrac{Fsu}{FSu\cdot\ max_{i,s}}\right) - 1 & \text{if } max_{i,s} \ne 0\cdot psi \\ 10000 & \text{otherwise} \end{cases}$$ min(MSsu) = 10.99

Yield
(using von-Mises)

$$MSy_{i,s} := \begin{cases} \left(\dfrac{Fty}{FSy \cdot uvm_{i,s}}\right) - 1 & \text{if } uvm_{i,s} \neq 0 \cdot psi \\ 10000 & \text{otherwise} \end{cases}$$

$$\min(MSy) = 11.76$$

Element ID, LC and Forces/Moments for Minimum Margin Cases

For each load case four margins of safety were determined for ultimate, shear, and yield. To display the minimum margin of safety for all load cases, the minimum margin of safety for each load case must be determined initially.

Place the minimum margin of safety for each load case in matrix MSu, MSsu, and MSy in each row of MSminu, MSminsu, and MSminy, respectively, forming a single column.

$$MSminu_i := \min\left[\left(MSu^T\right)^{\langle i \rangle}\right] \qquad MSminsu_i := \min\left[\left(MSsu^T\right)^{\langle i \rangle}\right] \qquad MSminy_i := \min\left[\left(MSy^T\right)^{\langle i \rangle}\right]$$

Create output file, Output2, of Element ID, Load Case, Forces and Moments corresponding to the minimum margins of safety.

$$Output2 := augment\left(ID, LC, \frac{Fx}{lbf}, \frac{Fy}{lbf}, \frac{Fz}{lbf}, \frac{Mx}{in \cdot lbf}, \frac{My}{in \cdot lbf}, \frac{Mz}{in \cdot lbf}, MSminu, MSminsu, MSminy\right)$$

Rearrange the rows of Output2 until the columns containing the margins of safety are in ascending order. Transpose the result and select the first column. Transposing the result a second time places the output in row order.

$$MS_min := augment\left[\left(csort(Output2, 9)^T\right)^{\langle 1 \rangle}, \left(csort(Output2, 10)^T\right)^{\langle 1 \rangle}, \left(csort(Output2, 11)^T\right)^{\langle 1 \rangle}\right]^T$$

$$MS_min = \begin{array}{c} \begin{array}{ccccccccccc} ID & LC & Fx & Fy & Fz & Mx & My & Mz & MS\ minu & MS\ minsu & MS\ miny \end{array} \\ \begin{pmatrix} 9900 & 2048 & 98.753 & -115.072 & -551.52 & -732.713 & 8097.33 & -1820.659 & 8.401 & 10.99 & 11.755 \\ 9900 & 2048 & 98.753 & -115.072 & -551.52 & -732.713 & 8097.33 & -1820.659 & 8.401 & 10.99 & 11.755 \\ 9900 & 2048 & 98.753 & -115.072 & -551.52 & -732.713 & 8097.33 & -1820.659 & 8.401 & 10.99 & 11.755 \end{pmatrix} \end{array}$$

$$MS_min_ID := MS_min_{1,1} \qquad MS_min_Fy := MS_min_{1,4} \qquad MS_min_My := MS_min_{1,7}$$

$$MS_min_LC := MS_min_{1,2} \qquad MS_min_Fz := MS_min_{1,5} \qquad MS_min_Mz := MS_min_{1,8}$$

$$MS_min_Fx := MS_min_{1,3} \qquad MS_min_T := MS_min_{1,6}$$

Identifying Element ID Number, Load Case Number, and Loads for Minimum Margins of Safety Determined on pages 5.5.1-13 and 14.

$MS_min_ID = 9900$	Element Identification for Minimum Margin
$MS_min_LC = 2048$	Load Case Number for Minimum Margin
$MS_min_Fx = 98.75288$	Axial Load
$MS_min_Fy = -115.072$	Shear in Y axis
$MS_min_Fz = -551.5204$	Shear in Z axis
$MS_min_T = -732.7131$	Torsion
$MS_min_My = 8097.33$	Moment about Y axis
$MS_min_Mz = -1820.659$	Moment about Z axis

Clevis Cross Section at 4.51 in. From the Clevis Flange

Section Properties: The cross section at this location is uniquely shaped. The properties of this cross section are valid from a distance of 4.51 in. to 5.70 in. from the clevis flange and will be used to determine the bending stress in this range. The cross section will subsequently be treated as an I-beam to determine the properties used in the torsional shear stress calculation. All dimensions were obtained from drawing no. SEG39137676. The properties of the cross section were obtained from Excel data (see attached).

Properties for the unique shape: Area: $Area451 := 3.3675 \cdot in^2$

Distance from centroid to outer fiber:

$$cz451 := \begin{pmatrix} -1.392 \\ -1.392 \\ 1.608 \\ 1.608 \end{pmatrix} \cdot in \qquad cy451 := \begin{pmatrix} -1.0075 \\ 1.0075 \\ 1.0075 \\ -1.0075 \end{pmatrix} \cdot in \qquad points := \begin{pmatrix} 1 \\ 2 \\ 3 \\ 4 \end{pmatrix}$$

Moments of inertia about centroid: $Iy451 := 3.1033 \cdot in^4$ $\quad Iz451 := 0.8765 \cdot in^4$ $\quad s := 1 .. rows(points)$

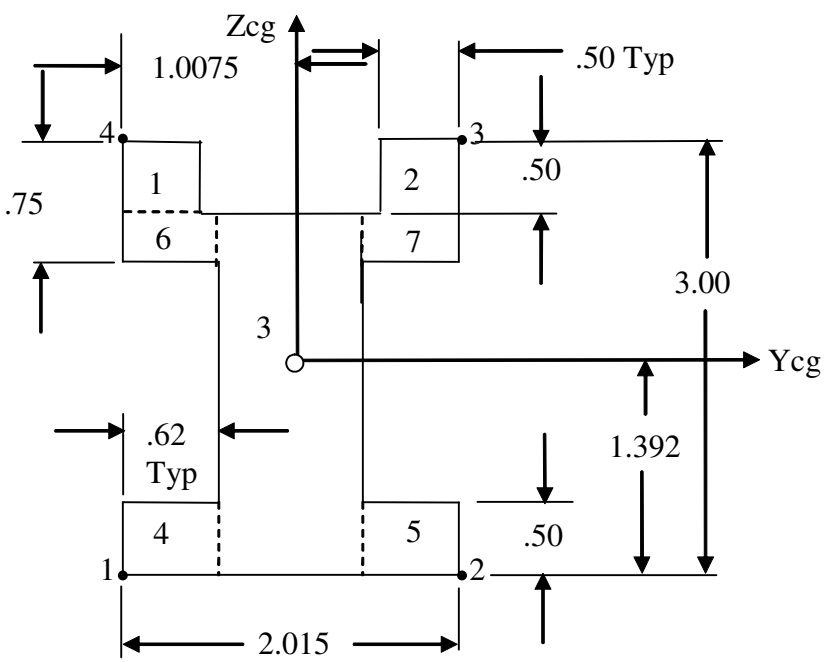

Position Vector - rvec3, represents vector components measured from the centroid of the cross section of the ROEU clevis at 4.51 inches from the clevis flange to the point of application of the forces and moments at the cg of the bolt pattern. The properties of this cross section are valid from 4.51 in. to 5.70 in. from the clevis flange. See drawing no. SEG39137676 for dimensions.

At 4.51 inches from the clevis flange:

rcs3 represents the origin of the local coordinate system, Xcg, Ycg, Zcg located at the centroid of the cross section.

Centroid of bolt pattern in local coordinates:

$$cgglobal := \begin{pmatrix} -4.51 \\ -.890 \\ -.047 \end{pmatrix} \cdot in \qquad r_{cs3} := \begin{pmatrix} 0 \\ 0 \\ 0 \end{pmatrix}$$

$$r_{vec3} := cgglobal - r_{cs3} \qquad r_{vec3} = \begin{pmatrix} -4.51 \\ -0.89 \\ -0.047 \end{pmatrix} in$$

Moment Distribution

rvec3 is used to determine the moment at the centroid of the cross section.

Total Moment:

$$M_{tot}^{\langle i \rangle} := \begin{pmatrix} Mx_i \\ My_i \\ Mz_i \end{pmatrix} + r_{vec3} \times \begin{pmatrix} Fx_i \\ Fy_i \\ Fz_i \end{pmatrix}$$

$$Mx_cs3_i := M_{tot_{1,i}} \qquad My_cs3_i := M_{tot_{2,i}} \qquad Mz_cs3_i := M_{tot_{3,i}}$$

Stresses on cross section:

Normal is direct axial plus bending:

$$u3_{i,s} := \frac{Fx_i}{Area451} + \frac{My_cs3_i \cdot cz451_s}{Iy451} - \frac{Mz_cs3_i \cdot cy451_s}{Iz451}$$

$$\max(u3) = 4329\,psi$$

$$\min(u3) = -3880\,psi$$

Cross Section Treated as I - Beam:

Properties for the I - Beam:

Area of I-Beam: $Area451Ibm := 2.8675 \cdot in^2$

Moments of inertia about centroid of I - beam: $Iy := 2.0103 \cdot in^4$ $Iz := 0.5792 \cdot in^4$ $s := 1 .. rows(points)$

$T := Mx_cs3$ $t_1 := 0.25 \cdot in$ $t_2 := 0.50 \cdot in$ $t_3 := 0.775 \cdot in$ $b_1 := 2.015 \cdot in$ $b_2 := 2.015 \cdot in$

$b_3 := 1.75 \cdot in$

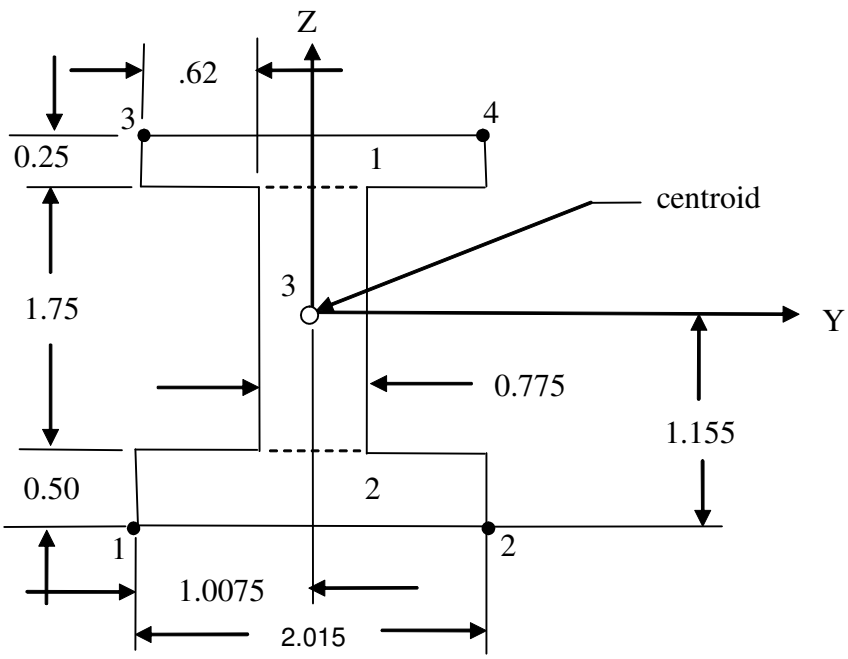

Stresses on cross section:

Shear due to transverse loading: $v_{i,s} := \sqrt{\left(\frac{Fy_i}{Area451Ibm}\right)^2 + \left(\frac{Fz_i}{Area451Ibm}\right)^2}$ $\max(v) = 196\,psi$

Shear due to torsion:

The torsional shear stress will be largest in the thickest element of the cross section.

$=_{min} := .246$ $=_{max} := .258$ $bt_{min} := 2.00$ $bt_{max} := 2.50$ $bt := \frac{b_3}{t_3}$

$=:= =_{min} + \frac{(bt - bt_{min}) \cdot (=_{max} - =_{min})}{bt_{max} - bt_{min}}$ $= = 0.252$ *Ref: Bruhn, Table A6.1*

Ref: Bruhn, p.A6.4

$$t_i := \frac{T_i \cdot t_3}{=\left(b_1 \cdot t_1^{\,3} + b_2 \cdot t_2^{\,3} + b_3 \cdot t_3^{\,3}\right)}$$

max(t) = 676 psi

Combined shear:

$$_{i,s} := v_{i,s} + t_i$$

max( ) = 782 psi

Principal Stresses:

$$u1p_{i,s} := \frac{u3_{i,s}}{2} + \left[\left(\frac{u3_{i,s}}{2}\right)^2 + \left(_{i,s}\right)^2\right]^{\frac{1}{2}}$$

max(u1p) = 4385 psi

$$u2p_{i,s} := \frac{u3_{i,s}}{2} - \left[\left(\frac{u3_{i,s}}{2}\right)^2 + \left(_{i,s}\right)^2\right]^{\frac{1}{2}}$$

min(u2p) = −3942 psi

Maximum principal stress is:

$$umax_{i,s} := \begin{cases} \left|u1p_{i,s}\right| & \text{if } \left|u1p_{i,s}\right| \ge \left|u2p_{i,s}\right| \\ \left|u2p_{i,s}\right| & \text{otherwise} \end{cases}$$

max(umax) = 4385 psi

Von-Mises Stress:

$$uvm_{i,s} := \sqrt{\left(u1p_{i,s}\right)^2 + \left(u2p_{i,s}\right)^2 - u1p_{i,s} \cdot u2p_{i,s}}$$

max(uvm) = 4413 psi

Maximum shear:

$$max_{i,s} := \sqrt{\frac{1}{4} \cdot \left(u3_{i,s}\right)^2 + \left(_{i,s}\right)^2}$$

max(max) = 2221 psi

Margins of safety:

Ultimate

$$MSu_{i,s} := \begin{cases} \dfrac{Ftu}{FSu \cdot umax_{i,s}} - 1 & \text{if } umax_{i,s} \ne 0 \cdot psi \\ 10000 & \text{otherwise} \end{cases}$$

min(MSu) = 6.64

Ultimate, shear

$$MSsu_{i,s} := \begin{cases} \left(\dfrac{Fsu}{FSu \cdot max_{i,s}}\right) - 1 & \text{if } max_{i,s} \neq 0 \cdot psi \\ 10000 & \text{otherwise} \end{cases} \qquad \min(MSsu) = 8.68$$

Yield
(using von-Mises)

$$MSy_{i,s} := \begin{cases} \left(\dfrac{Fty}{FSy \cdot uvm_{i,s}}\right) - 1 & \text{if } uvm_{i,s} \neq 0 \cdot psi \\ 10000 & \text{otherwise} \end{cases} \qquad \min(MSy) = 9.33$$

Element ID, LC and Forces/Moments for Minimum Margin Cases

For each load case four margins of safety were determined for ultimate, shear, and yield. To display the minimum margin of safety for all load cases, the minimum margin of safety for each load case must be determined initially.

Place the minimum margin of safety for each load case in matrix MSu, MSsu, and MSy in each row of MSminu, MSminsu, and MSminy, respectively, forming a single column.

$$MSminu_i := \min\left[\left(MSu^T\right)^{\langle i \rangle}\right] \qquad MSminsu_i := \min\left[\left(MSsu^T\right)^{\langle i \rangle}\right] \qquad MSminy_i := \min\left[\left(MSy^T\right)^{\langle i \rangle}\right]$$

Create output file, Output2, of Element ID, Load Case, Forces and Moments corresponding to the minimum margins of safety.

$$Output2 := augment\left(ID, LC, \frac{Fx}{lbf}, \frac{Fy}{lbf}, \frac{Fz}{lbf}, \frac{Mx}{in \cdot lbf}, \frac{My}{in \cdot lbf}, \frac{Mz}{in \cdot lbf}, MSminu, MSminsu, MSminy\right)$$

Rearrange the rows of Output2 until the columns containing the margins of safety are in ascending order. Transpose the result and select the first column. Transposing the result a second time places the output in row order.

$$MS_min := augment\left[\left(csort(Output2, 9)^T\right)^{\langle 1 \rangle}, \left(csort(Output2, 10)^T\right)^{\langle 1 \rangle}, \left(csort(Output2, 11)^T\right)^{\langle 1 \rangle}\right]^T$$

$$MS_min = \begin{array}{c} \begin{array}{ccccccccccc} ID & LC & Fx & Fy & Fz & Mx & My & Mz & MS\ minu & MS\ minsu & MS\ miny \end{array} \\ \begin{pmatrix} 9900 & 2048 & 98.753 & -115.072 & -551.52 & -732.713 & 8097.33 & -1820.659 & 6.64 & 8.682 & 9.332 \\ 9900 & 2048 & 98.753 & -115.072 & -551.52 & -732.713 & 8097.33 & -1820.659 & 6.64 & 8.682 & 9.332 \\ 9900 & 2048 & 98.753 & -115.072 & -551.52 & -732.713 & 8097.33 & -1820.659 & 6.64 & 8.682 & 9.332 \end{pmatrix} \end{array}$$

$MS_min_ID := MS_min_{1,1}$ $MS_min_Fy := MS_min_{1,4}$ $MS_min_My := MS_min_{1,7}$

$MS_min_LC := MS_min_{1,2}$ $MS_min_Fz := MS_min_{1,5}$ $MS_min_Mz := MS_min_{1,8}$

$MS_min_Fx := MS_min_{1,3}$ $MS_min_T := MS_min_{1,6}$

Identifying Element ID Number, Load Case Number, and Loads for Minimum Margins of Safety Determined on Pages 5.5.1-19 and 20.

$MS_min_ID = 9900$ Element Identification for Minimum Margin

$MS_min_LC = 2048$ Load Case Number for Minimum Margin

$MS_min_Fx = 98.75288$ Axial Load

$MS_min_Fy = -115.072$ Shear in Y axis

$MS_min_Fz = -551.5204$ Shear in Z axis

$MS_min_T = -732.7131$ Torsion

$MS_min_My = 8097.33$ Moment about Y axis

$MS_min_Mz = -1820.659$ Moment about Z axis

Cross Section at 5.70 in. From the Clevis Flange

The properties of this cross section are the same as at a distance of 4.51 in. from the clevis flange. Only the position vector is different.

Position Vector - rvec4, represents vector components measured from the centroid of the cross section of the ROEU clevis at 5.70 inches from the clevis flange to the point of application of the forces and moments at the cg of the bolt pattern.

Properties for the unique shape: Area: $Area570 := 3.3675 \cdot in^2$

Distance from centroid to outer fiber:

$$cz570 := \begin{pmatrix} -1.392 \\ -1.392 \\ 1.608 \\ 1.608 \end{pmatrix} \cdot in \qquad cy570 := \begin{pmatrix} -1.0075 \\ 1.0075 \\ 1.0075 \\ -1.0075 \end{pmatrix} \cdot in \qquad points := \begin{pmatrix} 1 \\ 2 \\ 3 \\ 4 \end{pmatrix}$$

Moments of inertia about centroid: $Iy570 := 3.1033 \cdot in^4$ $Iz570 := 0.8765 \cdot in^4$ $s := 1 .. rows(points)$

At 5.70 inches from the clevis flange:

rcs4 represents the origin of the local coordinate system, Xcg, Ycg, Zcg located at the centroid of the cross section.

Centroid of bolt pattern in local coordinates:

$$cgglobal := \begin{pmatrix} -5.70 \\ -.890 \\ -.047 \end{pmatrix} \cdot in \qquad r_{cs4} := \begin{pmatrix} 0 \\ 0 \\ 0 \end{pmatrix}$$

$$r_{vec4} := cgglobal - r_{cs4} \qquad r_{vec4} = \begin{pmatrix} -5.7 \\ -0.89 \\ -0.047 \end{pmatrix} in$$

Moment Distribution

rvec4 is used to determine the moment at the centroid of the cross section.

$$M_{tot}^{\langle i \rangle} := \begin{pmatrix} Mx_i \\ My_i \\ Mz_i \end{pmatrix} + r_{vec4} \times \begin{pmatrix} Fx_i \\ Fy_i \\ Fz_i \end{pmatrix}$$

$Mx_cs4_i := M_{tot_{1,i}}$ $\quad My_cs4_i := M_{tot_{2,i}}$ $\quad Mz_cs4_i := M_{tot_{3,i}}$

Stresses on cross section:

Normal is direct axial plus bending:

$$u4_{i,s} := \frac{Fx_i}{Area570} + \frac{My_cs4_i \cdot cz570_s}{Iy570} - \frac{Mz_cs4_i \cdot cy570_s}{Iz570}$$

$\max(u4) = 3832\,psi$

$\min(u4) = -3428\,psi$

Cross Section Treated as I - Beam:

Properties for the I - Beam:

Area: $Area570Ibm := 2.8675 \cdot in^2$

Moments of inertia about centroid of I - beam: $Iy := 2.0103 \cdot in^4$ $\quad Iz := 0.5792 \cdot in^4$ $\quad s := 1 .. rows(points)$

$t_1 := 0.25 \cdot in$ $\quad t_2 := 0.50 \cdot in$ $\quad t_3 := .775 \cdot in$ $\quad b_1 := 2.015 \cdot in$ $\quad b_2 := 2.015 \cdot in$ $\quad b_3 := 1.75 \cdot in$

$T := Mx_cs4$

Stresses on cross section:

Shear due to transverse loading

$$v_{i,s} := \sqrt{\left(\frac{Fy_i}{Area570Ibm}\right)^2 + \left(\frac{Fz_i}{Area570Ibm}\right)^2} \qquad \max(v) = 196\,psi$$

Shear due to torsion:

The torsional shear stress will be largest in the thickest element of the cross section.

Ref: Bruhn, Table A6.1

$=_{min} := .246$ $\quad =_{max} := .258$ $\quad bt_{min} := 2.00$ $\quad bt_{max} := 2.50$ $\quad bt := \frac{b_3}{t_3}$

$$=:= =_{min} + \frac{(bt - bt_{min})\cdot(=_{max} - =_{min})}{bt_{max} - bt_{min}} \qquad == 0.252$$

$$t_i := \frac{T_i \cdot t_3}{=\cdot\left(b_1 \cdot t_1^{\,3} + b_2 \cdot t_2^{\,3} + b_3 \cdot t_3^{\,3}\right)}$$

Ref: Bruhn, p.A6.4

$\max(\ \ t) = 676\,psi$

Combined shear:

$$_{i,s} := \ \ v_{i,s} + \ \ t_i$$

$\max(\ \ ) = 782\,psi$

Principal Stresses:

$$u1p_{i,s} := \frac{u4_{i,s}}{2} + \left[\left(\frac{u4_{i,s}}{2}\right)^2 + \left(\ \ _{i,s}\right)^2\right]^{\frac{1}{2}}$$

$\max(u1p) = 3895\,psi$

$$u2p_{i,s} := \frac{u4_{i,s}}{2} - \left[\left(\frac{u4_{i,s}}{2}\right)^2 + \left(\ \ _{i,s}\right)^2\right]^{\frac{1}{2}}$$

$\min(u2p) = -3499\,psi$

Maximum principal stress is:

$$umax_{i,s} := \begin{cases} \left|u1p_{i,s}\right| & \text{if } \left|u1p_{i,s}\right| \ge \left|u2p_{i,s}\right| \\ \left|u2p_{i,s}\right| & \text{otherwise} \end{cases}$$

$\max(umax) = 3895\,psi$

Von-Mises Stress:

$$uvm_{i,s} := \sqrt{\left(u1p_{i,s}\right)^2 + \left(u2p_{i,s}\right)^2 - u1p_{i,s}\cdot u2p_{i,s}}$$

$\max(uvm) = 3926\,psi$

Maximum shear:

$$max_{i,s} := \sqrt{\frac{1}{4}\cdot\left(u4_{i,s}\right)^2 + \left(\ \ _{i,s}\right)^2}$$

$\max(\ \ max) = 1979\,psi$

Margins of safety:

Ultimate

$$MSu_{i,s} := \begin{cases} \dfrac{Ftu}{FSu\cdot umax_{i,s}} - 1 & \text{if } umax_{i,s} \ne 0\cdot psi \\ 10000 & \text{otherwise} \end{cases}$$

$\min(MSu) = 7.6$

Ultimate, shear

$$MSsu_{i,s} := \begin{cases} \left(\dfrac{Fsu}{FSu \cdot max_{i,s}}\right) - 1 & \text{if } max_{i,s} \neq 0 \cdot psi \\ 10000 & \text{otherwise} \end{cases} \qquad \min(MSsu) = 9.87$$

Yield
(using von-Mises)

$$MSy_{i,s} := \begin{cases} \left(\dfrac{Fty}{FSy \cdot uvm_{i,s}}\right) - 1 & \text{if } uvm_{i,s} \neq 0 \cdot psi \\ 10000 & \text{otherwise} \end{cases} \qquad \min(MSy) = 10.61$$

Element ID, LC and Forces/Moments for Minimum Margin Cases

For each load case four margins of safety were determined for ultimate, shear, and yield. To display the minimum margin of safety for all load cases, the minimum margin of safety for each load case must be determined initially.

Place the minimum margin of safety for each load case in matrix MSu, MSsu, and MSy in each row of MSminu, MSminsu, and MSminy, respectively, forming a single column.

$$MSminu_i := \min\left[\left(MSu^T\right)^{\langle i \rangle}\right] \qquad MSminsu_i := \min\left[\left(MSsu^T\right)^{\langle i \rangle}\right] \qquad MSminy_i := \min\left[\left(MSy^T\right)^{\langle i \rangle}\right]$$

Create output file, Output2, of Element ID, Load Case, Forces and Moments corresponding to the minimum margins of safety.

$$Output2 := augment\left(ID, LC, \frac{Fx}{lbf}, \frac{Fy}{lbf}, \frac{Fz}{lbf}, \frac{Mx}{in \cdot lbf}, \frac{My}{in \cdot lbf}, \frac{Mz}{in \cdot lbf}, MSminu, MSminsu, MSminy\right)$$

Rearrange the rows of Output2 until the columns containing the margins of safety are in ascending order. Transpose the result and select the first column. Transposing the result a second time places the output in row order.

$$MS_min := augment\left[\left(csort(Output2, 9)^T\right)^{\langle 1 \rangle}, \left(csort(Output2, 10)^T\right)^{\langle 1 \rangle}, \left(csort(Output2, 11)^T\right)^{\langle 1 \rangle}\right]^T$$

$$MS_min = \begin{array}{c} \begin{array}{cccccccccccc} ID & LC & Fx & Fy & Fz & Mx & My & Mz & MS\ minu & MS\ minsu & MS\ miny \end{array} \\ \begin{pmatrix} 9900 & 2048 & 98.753 & -115.072 & -551.52 & -732.713 & 8097.33 & -1820.659 & 7.602 & 9.865 & 10.613 \\ 9900 & 2048 & 98.753 & -115.072 & -551.52 & -732.713 & 8097.33 & -1820.659 & 7.602 & 9.865 & 10.613 \\ 9900 & 2048 & 98.753 & -115.072 & -551.52 & -732.713 & 8097.33 & -1820.659 & 7.602 & 9.865 & 10.613 \end{pmatrix} \end{array}$$

$MS_min_ID := MS_min_{1,1}$ $\quad$ $MS_min_Fz := MS_min_{1,5}$

$MS_min_LC := MS_min_{1,2}$ $\quad$ $MS_min_T := MS_min_{1,6}$

$MS_min_Fx := MS_min_{1,3}$ $\quad$ $MS_min_My := MS_min_{1,7}$

$MS_min_Fy := MS_min_{1,4}$ $\quad$ $MS_min_Mz := MS_min_{1,8}$

Identifying Element ID Number, Load Case Number, and Loads for Minimum Margins of Safety Determined on Pages 5.5.1-24 and 25.

$MS_min_ID = 9900$ Element Identification for Minimum Margin

$MS_min_LC = 2048$ Load Case Number for Minimum Margin

$MS_min_Fx = 98.75288$ Axial Load

$MS_min_Fy = -115.072$ Shear in Y axis

$MS_min_Fz = -551.5204$ Shear in Z axis

$MS_min_T = -732.7131$ Torsion

$MS_min_My = 8097.33$ Moment about Y axis

$MS_min_Mz = -1820.659$ Moment about Z axis

Cross Section at 5.71 in. to 6.29 in. From the Clevis Flange

Section Properties: The cross section is rectangular with a 1.015 in. x .50 in. area removed. The properties of this clevis cross section are valid from a distance of 5.71 in. to 6.29 in. from the clevis flange and will be used to determine the bending stress in this range. The cross section will be treated as a rectangle to determine the properties used in the torsional shear stress calculation. All dimensions were obtained from drawing no. SEG39137676. The properties of the cross section were obtained from Excel data (see attached).

Properties for the rectangular shape:

Area: $Area571 := 5.5375 \cdot in^2$

Distance from centroid to outer fiber:

$$cz571 := \begin{pmatrix} -1.3854 \\ -1.3854 \\ 1.6146 \\ 1.6146 \end{pmatrix} \cdot in \qquad cy571 := \begin{pmatrix} -1.0075 \\ 1.0075 \\ 1.0075 \\ -1.0075 \end{pmatrix} \cdot in \qquad points := \begin{pmatrix} 1 \\ 2 \\ 3 \\ 4 \end{pmatrix}$$

Moments of inertia about centroid: $Iy571 := 3.6575 \cdot in^4$ $Iz571 := 2.0018 \cdot in^4$ $s := 1 .. rows(points)$

Position Vector - rvec5, represents the components of the position vector measured from the centroid of the cross section of the ROEU clevis at 5.71 inches from the clevis flange to the point of application of the forces and moments at the cg of the bolt pattern.

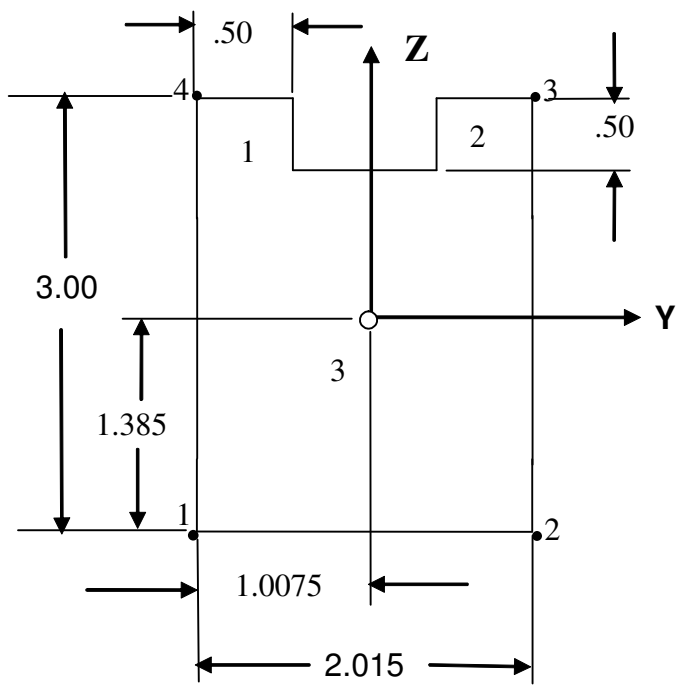

Cross section at 5.71 inches from the clevis flange:

rcs5 represents the origin of the local coordinate system, Xcg, Ycg, Zcg located at the centroid of the cross section.

Centroid of bolt pattern in local coordinates:

$$cgglobal := \begin{pmatrix} -5.71 \\ -.890 \\ -.040 \end{pmatrix} \cdot in \qquad r_{cs5} := \begin{pmatrix} 0 \\ 0 \\ 0 \end{pmatrix} \qquad r_{vec5} := cgglobal - r_{cs5}$$

Moment Distribution

rvec5 is used to determine the moment at the centroid of the cross section.

Total Moment:

$$M_{tot}^{\langle i \rangle} := \begin{pmatrix} Mx_i \\ My_i \\ Mz_i \end{pmatrix} + r_{vec5} \times \begin{pmatrix} Fx_i \\ Fy_i \\ Fz_i \end{pmatrix} \qquad r_{vec5} = \begin{pmatrix} -5.71 \\ -0.89 \\ -0.04 \end{pmatrix} in$$

$$Mx_cs5_i := M_{tot_{1,i}} \qquad My_cs5_i := M_{tot_{2,i}} \qquad Mz_cs5_i := M_{tot_{3,i}}$$

Bending Stress on Cross Section:

Normal is direct axial plus bending:

$$u5_{i,s} := \frac{Fx_i}{Area571} + \frac{My_cs5_i \cdot cz571_s}{Iy571} - \frac{Mz_cs5_i \cdot cy571_s}{Iz571}$$

Stresses on cross section:

$\max(u5) = 2742\,psi$

$\min(u5) = -2396\,psi$

Shear due to transverse loading

$$v_{i,s} := \sqrt{\left(\frac{Fy_i}{Area571}\right)^2 + \left(\frac{Fz_i}{Area571}\right)^2}$$

$\max(\ v) = 102\,psi$

Shear due to torsion:

$$a := \frac{3.00}{2} \cdot in \qquad b := \frac{2.015}{2} \cdot in \qquad a = 1.5\,in \qquad b = 1.008\,in$$

(Roark's, 7th Ed., Case 4, p. 401)

$$t_i := 3 \cdot \frac{T_i}{8 \cdot a \cdot b^2} \cdot \left[1 + 0.6095 \cdot \frac{b}{a} + 0.8865 \cdot \left(\frac{b}{a}\right)^2 - 1.8023 \cdot \left(\frac{b}{a}\right)^3 + 0.9100 \cdot \left(\frac{b}{a}\right)^4\right]$$

Combined shear:

$$_{i,s} := v_{i,s} + t_i$$

$\max(\ t) = 86\,psi$

$\max(\ ) = 141\,psi$

Principal Stresses:

$$u1p_{i,s} := \frac{u5_{i,s}}{2} + \left[\left(\frac{u5_{i,s}}{2}\right)^2 + (\ _{i,s})^2\right]^{\frac{1}{2}}$$

$\max(u1p) = 2742\,psi$

$$u2p_{i,s} := \frac{u5_{i,s}}{2} - \left[\left(\frac{u5_{i,s}}{2}\right)^2 + (\ _{i,s})^2\right]^{\frac{1}{2}}$$

$\min(u2p) = -2396\,psi$

Maximum principal stress is:

$$umax_{i,s} := \begin{cases} |u1p_{i,s}| & \text{if } |u1p_{i,s}| \geq |u2p_{i,s}| \\ |u2p_{i,s}| & \text{otherwise} \end{cases}$$

$max(umax) = 2742\,psi$

Von-Mises Stress:

$$uvm_{i,s} := \sqrt{(u1p_{i,s})^2 + (u2p_{i,s})^2 - u1p_{i,s} \cdot u2p_{i,s}}$$

$max(uvm) = 2742\,psi$

Maximum shear:

$$max_{i,s} := \sqrt{\frac{1}{4} \cdot (u5_{i,s})^2 + (\ \ _{i,s})^2}$$

$max(\ \ max) = 1371\,psi$

Margins of safety:

Ultimate

$$MSu_{i,s} := \begin{cases} \dfrac{Ftu}{FSu \cdot umax_{i,s}} - 1 & \text{if } umax_{i,s} \neq 0 \cdot psi \\ 10000 & \text{otherwise} \end{cases}$$

$min(MSu) = 11.22$

Ultimate, shear

$$MSsu_{i,s} := \begin{cases} \left(\dfrac{Fsu}{FSu \cdot \ max_{i,s}}\right) - 1 & \text{if } max_{i,s} \neq 0 \cdot psi \\ 10000 & \text{otherwise} \end{cases}$$

$min(MSsu) = 14.68$

Yield
(using von-Mises)

$$MSy_{i,s} := \begin{cases} \left(\dfrac{Fty}{FSy \cdot uvm_{i,s}}\right) - 1 & \text{if } uvm_{i,s} \neq 0 \cdot psi \\ 10000 & \text{otherwise} \end{cases}$$

$min(MSy) = 15.63$

Element ID, LC and Forces/Moments for Minimum Margin Cases

Element ID, LC and Forces/Moments for Minimum Margin Cases

For each load case four margins of safety were determined for ultimate, shear, and yield. To display the minimum margin of safety for all load cases, the minimum margin of safety for each load case must be determined initially.

Place the minimum margin of safety for each load case in matrix MSu, MSsu, and MSy in each row of MSminu, MSminsu, and MSminy, respectively, forming a single column.

$$MSminu_i := min\left[\left(MSu^T\right)^{\langle i \rangle}\right] \qquad MSminsu_i := min\left[\left(MSsu^T\right)^{\langle i \rangle}\right] \qquad MSminy_i := min\left[\left(MSy^T\right)^{\langle i \rangle}\right]$$

Create output file, Output2, of Element ID, Load Case, Forces and Moments corresponding to the minimum margins of safety.

$$\text{Output2} := \text{augment}\left(\text{ID}, \text{LC}, \frac{\text{Fx}}{\text{lbf}}, \frac{\text{Fy}}{\text{lbf}}, \frac{\text{Fz}}{\text{lbf}}, \frac{\text{Mx}}{\text{in}\cdot\text{lbf}}, \frac{\text{My}}{\text{in}\cdot\text{lbf}}, \frac{\text{Mz}}{\text{in}\cdot\text{lbf}}, \text{MSminu}, \text{MSminsu}, \text{MSminy}\right)$$

Rearrange the rows of Output2 until the columns containing the margins of safety are in ascending order. Transpose the result and select the first column. Transposing the result a second time places the output in row order.

$$\text{MS_min} := \text{augment}\left[\left(\text{csort}(\text{Output2}, 9)^{T}\right)^{\langle 1\rangle}, \left(\text{csort}(\text{Output2}, 10)^{T}\right)^{\langle 1\rangle}, \left(\text{csort}(\text{Output2}, 11)^{T}\right)^{\langle 1\rangle}\right]^{T}$$

$$\text{MS_min} = \begin{array}{c} \begin{array}{ccccccccccc} \text{ID} & \text{LC} & \text{Fx} & \text{Fy} & \text{Fz} & \text{Mx} & \text{My} & \text{Mz} & \text{MS minu} & \text{MS minsu} & \text{MS miny} \end{array} \\ \begin{pmatrix} 9900 & 2048 & 98.753 & -115.072 & -551.52 & -732.713 & 8097.33 & -1820.659 & 11.218 & 14.682 & 15.631 \\ 9900 & 2048 & 98.753 & -115.072 & -551.52 & -732.713 & 8097.33 & -1820.659 & 11.218 & 14.682 & 15.631 \\ 9900 & 2048 & 98.753 & -115.072 & -551.52 & -732.713 & 8097.33 & -1820.659 & 11.218 & 14.682 & 15.631 \end{pmatrix} \end{array}$$

$\text{MS_min_ID} := \text{MS_min}_{1,1}$ $\quad$ $\text{MS_min_Fy} := \text{MS_min}_{1,4}$ $\quad$ $\text{MS_min_My} := \text{MS_min}_{1,7}$

$\text{MS_min_LC} := \text{MS_min}_{1,2}$ $\quad$ $\text{MS_min_Fz} := \text{MS_min}_{1,5}$ $\quad$ $\text{MS_min_Mz} := \text{MS_min}_{1,8}$

$\text{MS_min_Fx} := \text{MS_min}_{1,3}$ $\quad$ $\text{MS_min_T} := \text{MS_min}_{1,6}$

Identifying Element ID Number, Load Case Number, and Loads for Minimum Margins of Safety Determined on Page 5.5.1-29.

$\text{MS_min_ID} = 9900$ Element Identification for Minimum Margin

$\text{MS_min_LC} = 2048$ Load Case Number for Minimum Margin

$\text{MS_min_Fx} = 98.75288$ Axial Load

$\text{MS_min_Fy} = -115.072$ Shear in Y axis

$\text{MS_min_Fz} = -551.5204$ Shear in Z axis

$\text{MS_min_T} = -732.7131$ Torsion

$\text{MS_min_My} = 8097.33$ Moment about Y axis

$\text{MS_min_Mz} = -1820.659$ Moment about Z axis

Cross Section at 6.29 in. From the Clevis Flange

The properties of this cross section are the same as at a distance of 5.71 in. from the clevis flange. Only the position vector is different.

Position Vector - rvec6, represents the components of the position vector measured from the centroid of the cross section of the ROEU clevis at 6.29 inches from the clevis flange to the point of application of the forces and moments at the cg of the bolt pattern.

Properties for the rectangular shape:

Area: $Area629 := 5.5375 \cdot in^2$

Distance from centroid to outer fiber:

$$cz629 := \begin{pmatrix} -1.3854 \\ -1.3854 \\ 1.6146 \\ 1.6146 \end{pmatrix} \cdot in \qquad cy629 := \begin{pmatrix} -1.0075 \\ 1.0075 \\ 1.0075 \\ -1.0075 \end{pmatrix} \cdot in \qquad points := \begin{pmatrix} 1 \\ 2 \\ 3 \\ 4 \end{pmatrix}$$

Moments of inertia about centroid: $Iy629 := 3.6575 \cdot in^4$ $\quad Iz629 := 2.0018 \cdot in^4$ $\quad s := 1 .. rows(points)$

Centroid of bolt pattern in local coordinates:

$$cgglobal := \begin{pmatrix} -6.29 \\ -.890 \\ -.040 \end{pmatrix} \cdot in \qquad r_{cs6} := \begin{pmatrix} 0 \\ 0 \\ 0 \end{pmatrix} \qquad r_{vec6} := cgglobal - r_{cs6}$$

Moment Distribution

rvec6 is used to determine the moment at the centroid of the cross section.

Total Moment:

$$M_{tot}^{\langle i \rangle} := \begin{pmatrix} Mx_i \\ My_i \\ Mz_i \end{pmatrix} + r_{vec6} \times \begin{pmatrix} Fx_i \\ Fy_i \\ Fz_i \end{pmatrix} \qquad r_{vec6} = \begin{pmatrix} -6.29 \\ -0.89 \\ -0.04 \end{pmatrix} in$$

$$Mx_cs6_i := M_{tot_{1,i}} \qquad My_cs6_i := M_{tot_{2,i}} \qquad Mz_cs6_i := M_{tot_{3,i}}$$

Bending Stress on cross section:

Normal is direct axial plus bending:

$$u6_{i,s} := \frac{Fx_i}{Area629} + \frac{My_cs6_i \cdot cz629_s}{Iy629} - \frac{Mz_cs6_i \cdot cy629_s}{Iz629}$$

Stresses on cross section:

$\max(u6) = 2567\,psi$

$\min(u6) = -2242\,psi$

Shear due to transverse loading

$$v_{i,s} := \sqrt{\left(\frac{Fy_i}{Area629}\right)^2 + \left(\frac{Fz_i}{Area629}\right)^2}$$

$\max(\ \ v) = 102\,psi$

Shear due to torsion:

$a := \frac{3.00}{2} \cdot in \qquad b := \frac{2.015}{2} \cdot in \qquad a = 1.5\,in \qquad b = 1.008\,in$

(Roark's, 7th Ed., Case 4, p. 401)

$$t_i := 3 \cdot \frac{T_i}{8 \cdot a \cdot b^2} \cdot \left[1 + 0.6095 \cdot \frac{b}{a} + 0.8865 \cdot \left(\frac{b}{a}\right)^2 - 1.8023 \cdot \left(\frac{b}{a}\right)^3 + 0.9100 \cdot \left(\frac{b}{a}\right)^4\right]$$

Combined shear:

$$_{i,s} := v_{i,s} + t_i$$

$\max(\ \ t) = 86\,psi \qquad \max(\ \ ) = 141\,psi$

Principal Stresses:

$$u1p_{i,s} := \frac{u6_{i,s}}{2} + \left[\left(\frac{u6_{i,s}}{2}\right)^2 + (\ \ _{i,s})^2\right]^{\frac{1}{2}}$$

$\max(u1p) = 2567\,psi$

$$u2p_{i,s} := \frac{u6_{i,s}}{2} - \left[\left(\frac{u6_{i,s}}{2}\right)^2 + (\ \ _{i,s})^2\right]^{\frac{1}{2}}$$

$\min(u2p) = -2242\,psi$

Maximum principal stress is:

$$umax_{i,s} := \begin{cases} |u1p_{i,s}| & \text{if } |u1p_{i,s}| \ge |u2p_{i,s}| \\ |u2p_{i,s}| & \text{otherwise} \end{cases}$$

$\max(umax) = 2567\,psi$

Von-Mises Stress:

$$uvm_{i,s} := \sqrt{(u1p_{i,s})^2 + (u2p_{i,s})^2 - u1p_{i,s} \cdot u2p_{i,s}}$$

$\max(uvm) = 2567\,psi$

Maximum shear: $\max_{i,s} := \sqrt{\frac{1}{4}\cdot\left(u6_{i,s}\right)^2 + \left(\ _{i,s}\right)^2}$ $\max(\ \max) = 1284\,psi$

Margins of safety:

Ultimate $MSu_{i,s} := \begin{cases} \frac{Ftu}{FSu\cdot umax_{i,s}} - 1 & \text{if } umax_{i,s} \neq 0\cdot psi \\ 10000 & \text{otherwise} \end{cases}$ $\min(MSu) = 12.05$

Ultimate, shear $MSsu_{i,s} := \begin{cases} \left(\frac{Fsu}{FSu\cdot\ \max_{i,s}}\right) - 1 & \text{if } \max_{i,s} \neq 0\cdot psi \\ 10000 & \text{otherwise} \end{cases}$ $\min(MSsu) = 15.75$

Yield (using von-Mises) $MSy_{i,s} := \begin{cases} \left(\frac{Fty}{FSy\cdot uvm_{i,s}}\right) - 1 & \text{if } uvm_{i,s} \neq 0\cdot psi \\ 10000 & \text{otherwise} \end{cases}$ $\min(MSy) = 16.76$

Element ID, LC and Forces/Moments for Minimum Margin Cases

For each load case four margins of safety were determined for ultimate, shear, and yield. To display the minimum margin of safety for all load cases, the minimum margin of safety for each load case must be determined initially.

Place the minimum margin of safety for each load case in matrix MSu, MSsu, and MSy in each row of MSminu, MSminsu, and MSminy, respectively, forming a single column.

$MSminu_i := \min\left[\left(MSu^T\right)^{\langle i\rangle}\right]$ $MSminsu_i := \min\left[\left(MSsu^T\right)^{\langle i\rangle}\right]$ $MSminy_i := \min\left[\left(MSy^T\right)^{\langle i\rangle}\right]$

Create output file, Output2, of Element ID, Load Case, Forces and Moments corresponding to the minimum margins of safety.

$$Output2 := augment\left(ID, LC, \frac{Fx}{lbf}, \frac{Fy}{lbf}, \frac{Fz}{lbf}, \frac{Mx}{in\cdot lbf}, \frac{My}{in\cdot lbf}, \frac{Mz}{in\cdot lbf}, MSminu, MSminsu, MSminy\right)$$

Rearrange the rows of Output2 until the columns containing the margins of safety are in ascending order. Transpose the result and select the first column. Transposing the result a second time places the output in row order.

$$MS_min := augment\left[\left(csort(Output2, 9)^T\right)^{\langle 1\rangle}, \left(csort(Output2, 10)^T\right)^{\langle 1\rangle}, \left(csort(Output2, 11)^T\right)^{\langle 1\rangle}\right]^T$$

$$MS_min = \begin{array}{c} \begin{array}{ccccccccccc} ID & LC & Fx & Fy & Fz & Mx & My & Mz & MS\ minu & MS\ minsu & MS\ miny \end{array} \\ \begin{pmatrix} 9900 & 2048 & 98.753 & -115.072 & -551.52 & -732.713 & 8097.33 & -1820.659 & 12.05 & 15.75 & 16.763 \\ 9900 & 2048 & 98.753 & -115.072 & -551.52 & -732.713 & 8097.33 & -1820.659 & 12.05 & 15.75 & 16.763 \\ 9900 & 2048 & 98.753 & -115.072 & -551.52 & -732.713 & 8097.33 & -1820.659 & 12.05 & 15.75 & 16.763 \end{pmatrix} \end{array}$$

$MS_min_ID := MS_min_{1,1}$

$MS_min_LC := MS_min_{1,2}$

$MS_min_Fx := MS_min_{1,3}$

$MS_min_Fy := MS_min_{1,4}$

$MS_min_Fz := MS_min_{1,5}$

$MS_min_T := MS_min_{1,6}$

$MS_min_My := MS_min_{1,7}$

$MS_min_Mz := MS_min_{1,8}$

Identifying Element ID Number, Load Case Number, and Loads for Minimum Margins of Safety Determined on Page 5.5.1-33.

$MS_min_ID = 9900$ Element Identification for Minimum Margin

$MS_min_LC = 2048$ Load Case Number for Minimum Margin

$MS_min_Fx = 98.75288$ Axial Load

$MS_min_Fy = -115.072$ Shear in Y axis

$MS_min_Fz = -551.5204$ Shear in Z axis

$MS_min_T = -732.7131$ Torsion

$MS_min_My = 8097.33$ Moment about Y axis

$MS_min_Mz = -1820.659$ Moment about Z axis

Summary

The following table depicts the analysis results.

ROEU Clevis Assembly - Summary of Margins of Safety						
Part Name / Drawing No.	Material & Heat Treatment	Distance From Clevis Flange(in.)	Margin of Safety, M.S.			Reference Page
			Ultimate	Ultimate, Shear	Yield	
Clevis SDG39137676	7050-T7451	2.5	6.88	9.07	9.7	5.5.1-8
		4.5	8.4	10.99	11.76	5.5.1-13,14
		4.51	6.64	8.68	9.33	5.5.1-19,20
		5.7	7.60	9.87	10.61	5.5.1-24,25
		5.71	11.22	14.68	15.63	5.5.1-29
		6.29	12.05	15.75	16.76	5.5.1-33

Based on the margins of safety in the above table, the critical cross section has a margin of safety of 6.64 ultimate and is located a distance of 4.51 inches from the clevis flange.

5.6 Intentionally Left Blank

Intentionally Left Blank

5.7 Intentionally Left Blank

Intentionally Left Blank

5.8 Scuff Plate

Margins of Safety

Table 5.8-1: Minimum Margin of Safety Summary

Part / Dwg Number	Part Name / Description	Material & Heat Treatment	Critical Load Condition	Failure Mode	Margin of Safety	Reference Page
SDG39135867	Scuff Plate, USS-02 Assembly	AL ALY 7050-T7451	Impact (Note 3)	Principal Stress	0.449 (u)	5.8-12

Notes:

1. Factors of Safety are 2.0 for Ultimate and 1.25 for Yield
2. u = ultimate
3. Critical load condition is impact, due to maximum contact velocity of 0.11 ft/sec (Ref. Appendix C14-1)

References:

1. Formulas for Stress, Strain, and Structural Matrices, by Walter D. Pilkey

Factors of Safety

The Scuff Plates are designed with a yield factor of 1.25 and an ultimate factor of 2.0 against the equivalent static load, as calculated on page 5.8-9 (see also *Analysis Approach* on page 5.8-8).

Description of Structure

Figure 5.8-1 below shows the locations of the Scuff Plates on USS-02 Assembly.

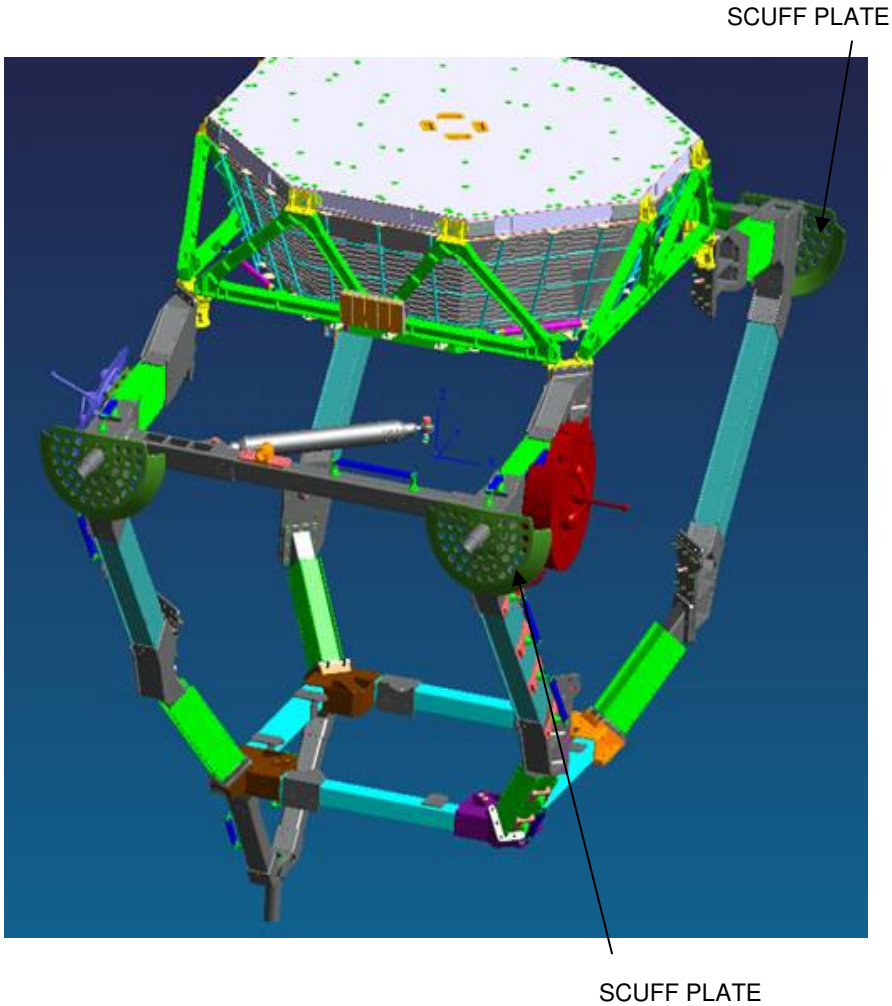

Figure 5.8-1: Location of Scuff Plates on USS-02 Assembly

Figure 5.8-2 below shows the configuration of the Scuff Plate.

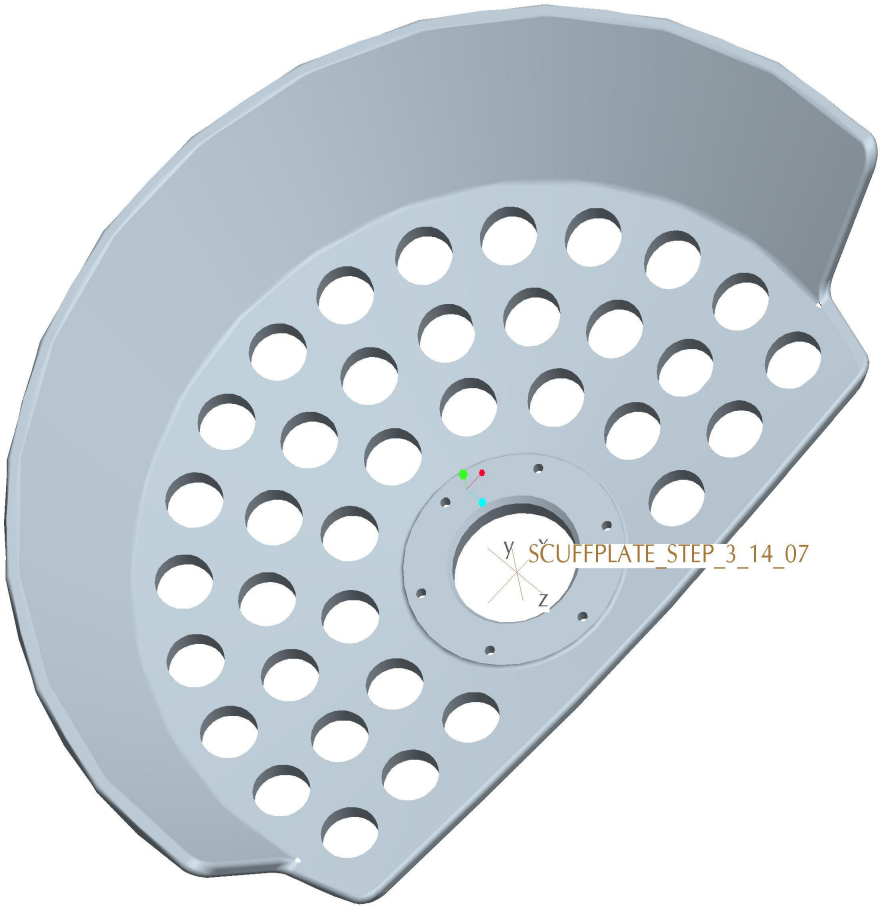

Figure 5.8-2: Configuration of Scuff Plate

Description of Model

A FEM model was built of the Scuff Plate hardware using FEMAP.

1. The Scuff Plate was mainly modeled as CQUAD4 and CTRIA3 plate elements.
2. At the bolt holes, RBE2 rigid elements with DOF's 1-6 are represented.
3. The model was then constrained with DOF's 1-3 at six bolt location.
4. Eight load cases were applied. Each case included a 125-lb load distributed on several nodes. Critical locations were selected by engineering judgment.
5. MSC/NASTRAN v.2005 was used as a solver for analyzing the complete math model of the Scuff Plate. The static solution was run.

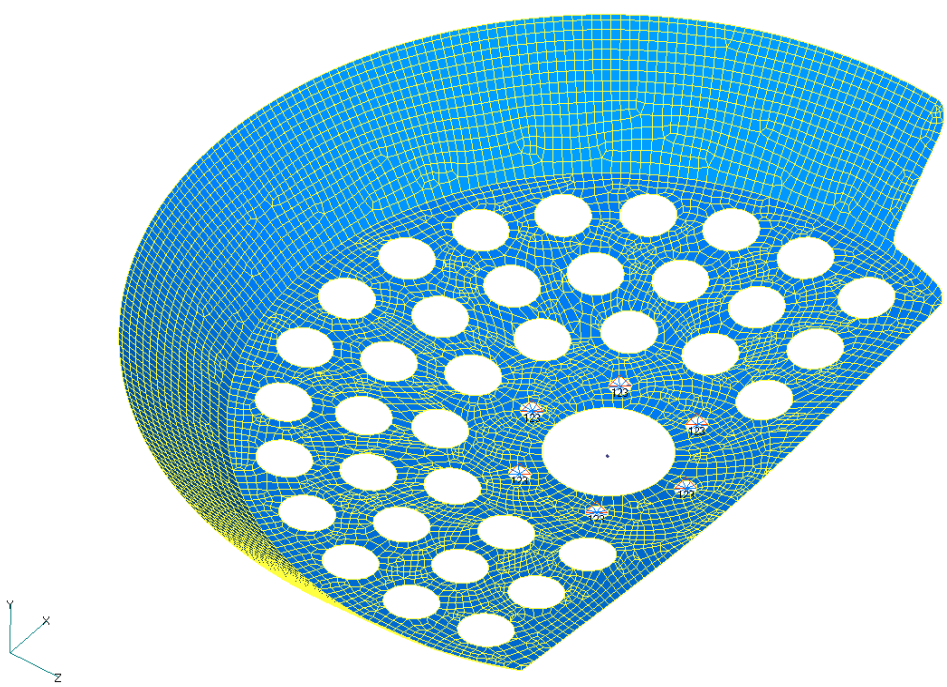

Figure 5.8-3 FEMAP Model of Scuff Plate

6. Plate stresses and SPC forces were recovered.
7. NASPOST was used to sort out the maximum of Principal, Von-Mises, and Shear stresses (see Appendix A18).

The Table below shows detail of model inputs.

Table 5.8-2 – Inputs of Finite Element Model of Scuff Plates

DESCRIPTION	ELEM #	TYPE	COLOR	PROP	MAT'L
Scuff Plate	11,001 - 17,304	plate	124	1 - TK.37706	1 - 7050-T7451
	10,001 - 10,084	@ RBE			
	20,001 - 20,006	RBE	49		
	20,101 - 20,258	bar	49	2 - dummy	1 - 7050-T7451

The 6 attachment bolts are modeled as SPC at nodes 10,001 to 10,006.

Model Checks

Rigid body checks were performed using MSC/NASTRAN. Results are shown below. The KGG, KNN and KFF matrices all pass with low strain energies.

```
*** USER INFORMATION MESSAGE 7570 (GPWG1D)
     RESULTS OF RIGID BODY CHECKS OF MATRIX KGG     (G-SET)  FOLLOW:
    PRINT RESULTS IN ALL SIX DIRECTIONS AGAINST THE LIMIT OF   1.500000E-02
        DIRECTION        STRAIN ENERGY        PASS/FAIL
        ---------        -------------        ---------
          1              5.106904E-08         PASS
          2              1.143951E-08         PASS
          3              1.467737E-08         PASS
          4              5.528508E-06         PASS
          5              1.375455E-06         PASS
          6              1.417476E-07         PASS
```

*** USER INFORMATION MESSAGE 7570 (GPWG1D)
RESULTS OF RIGID BODY CHECKS OF MATRIX KNN (N-SET) FOLLOW:
PRINT RESULTS IN ALL SIX DIRECTIONS AGAINST THE LIMIT OF 1.500000E-02

DIRECTION	STRAIN ENERGY	PASS/FAIL
1	4.441881E-08	PASS
2	1.582691E-08	PASS
3	1.910115E-08	PASS
4	5.450374E-06	PASS
5	1.857942E-06	PASS
6	1.417501E-07	PASS

*** USER INFORMATION MESSAGE 7570 (GPWG1D)
RESULTS OF RIGID BODY CHECKS OF MATRIX KFF (F-SET) FOLLOW:
PRINT RESULTS IN ALL SIX DIRECTIONS AGAINST THE LIMIT OF 1.500000E-02

DIRECTION	STRAIN ENERGY	PASS/FAIL
1	4.441881E-08	PASS
2	1.582691E-08	PASS
3	1.910115E-08	PASS
4	5.450374E-06	PASS
5	1.857942E-06	PASS
6	1.417501E-07	PASS

*** USER INFORMATION MESSAGE 7570 (GPWG1D)
RESULTS OF RIGID BODY CHECKS OF MATRIX KAA1 (A-SET) FOLLOW:
PRINT RESULTS IN ALL SIX DIRECTIONS AGAINST THE LIMIT OF 1.500000E-02

DIRECTION	STRAIN ENERGY	PASS/FAIL
1	4.441881E-08	PASS
2	1.582691E-08	PASS
3	1.910115E-08	PASS
4	5.450374E-06	PASS
5	1.857942E-06	PASS
6	1.417501E-07	PASS

A further check is done for the rigid body modes. The first 10 unconstrained modes are shown below. There are six rigid body modes (~ 0.0), and then good separation with the first non-rigid body mode.

Table 5.8-3: Eigenvalue Summary of Scuff Plate

REAL EIGENVALUES						
MODE NO.	EXTRACTION ORDER	EIGENVALUE	RADIANS	CYCLES	GENERALIZED MASS	GENERALIZED STIFFNESS
1	1	-1.43E-05	3.78E-03	6.02E-04	1.00E+00	-1.43E-05
2	2	-1.20E-05	3.47E-03	5.52E-04	1.00E+00	-1.20E-05
3	3	-4.98E-06	2.23E-03	3.55E-04	1.00E+00	-4.98E-06
4	4	-3.98E-06	1.99E-03	3.17E-04	1.00E+00	-3.98E-06
5	5	4.33E-06	2.08E-03	3.31E-04	1.00E+00	4.33E-06
6	6	1.14E-05	3.38E-03	5.38E-04	1.00E+00	1.14E-05
7	7	9.08E+05	9.53E+02	1.52E+02	1.00E+00	9.08E+05
8	8	1.09E+06	1.04E+03	1.66E+02	1.00E+00	1.09E+06
9	9	4.94E+06	2.22E+03	3.54E+02	1.00E+00	4.94E+06
10	10	5.78E+06	2.40E+03	3.83E+02	1.00E+00	5.78E+06

Material and Temperature

The Scuff Plates are made from 7050-T7451 Aluminum Alloy. Material properties are taken from Boeing Material Specification, BMS 7-323C, and MIL-HDBK-5H (see page 5.8-10). Temperature limits are -47° F to 150° F, as defined in Appendix C2.

Analysis Approach

The Scuff Plates are designed to withstand an impact associated with a payload mass of 15,000 lb, moving at a maximum contact velocity of 0.11 foot per second (see Appendix C14-1). The approach used to calculate the equivalent static loads and stresses is as per Ref. 1, pages 458 and 459.

Eight different critical impact locations are considered, which are selected by engineering judgment. In each case, a 125-lb load is applied distributed over several nodes. The recovered stresses are scaled by a factor proportional to the stiffness coefficients, as predicted by the FEM (see detail analysis starting on page 5.8-9).

The critical stresses for the Scuff Plate are compared to the ultimate and yield strength of 7050-T7451 Aluminum Alloy, corrected for the maximum temperature of 150º F. All Margins of Safety are positive.

DETAIL ANALYSIS

Load applied in FEMAP: $F := 125 \cdot lbf$

Eight different load cases are considered selected by engineering judgment, as shown in the Figures:

Case 1 - See Figure 5.8-4

Case 2 - See Figure 5.8-5

Case 3 - See Figure 5.8-6

Case 4 - See Figure 5.8-7

Case 5 - See Figure 5.8-8

Case 6 - See Figure 5.8-9

Case 7 - See Figure 5.8-10

Case 8 - See Figure 5.8-11

Recovered displacements from FEM at the eight selected locations where the loads are applied - see Appendix A18, page 6:

$$\beta := \begin{pmatrix} .03518277 \\ .08391396 \\ .05281544 \\ .1182711 \\ .003485398 \\ .03611127 \\ .005072352 \\ .05173062 \end{pmatrix} \cdot in$$

Stiffnesses:

$$k := \frac{F}{\beta} \qquad k = \begin{pmatrix} 3553 \\ 1490 \\ 2367 \\ 1057 \\ 35864 \\ 3462 \\ 24643 \\ 2416 \end{pmatrix} \frac{lbf}{in}$$

AMS mass: $mass := 15000 \cdot lb$

Impact velocity: $v := .11 \cdot \frac{ft}{sec}$ See Appendix C14

Equivalent static loads:

$$Pequ := \sqrt{k \cdot mass \cdot v^2} \qquad Pequ = \begin{pmatrix} 490 \\ 318 \\ 400 \\ 267 \\ 1558 \\ 484 \\ 1292 \\ 404 \end{pmatrix} lbf$$

From Ref. 1, pages 458 & 459

Scale factors:

$$factor := \frac{Pequ}{F} \qquad factor = \begin{pmatrix} 3.923341 \\ 2.540411 \\ 3.202142 \\ 2.139842 \\ 12.465075 \\ 3.872574 \\ 10.332761 \\ 3.235543 \end{pmatrix}$$

Material properties: 7050-T7451 Aluminum Alloy, BMS 7-323C, or AMS 4050

From Boeing Material Specification, BMS 7-323C, Table 1 & MIL-HDBK-5H, Table 3.7.3.0(b1)
for thickness of 3.00 inch to 4.00 inch

$Ftu := 68000psi \qquad Fty := 57000psi \qquad Fsu := 43000psi$

$f_{tu} := 0.91$

$f_{ty} := 0.97$

Temperature correction factors for 150 deg F, from MIL-HDBK-5H, Figure 3.7.3.2.1

$Ftu := f_{tu} \cdot Ftu \qquad Ftu = 61880\,psi$

$Fty := f_{ty} \cdot Fty \qquad Fty = 55290\,psi$

$Fsu := f_{tu} \cdot Fsu \qquad Fsu = 39130\,psi$

Factors of Safety:

$FSu := 2.0 \qquad FSy := 1.25$

NASPOST results for the applied load of 125-lb (see Appendix A18):

$$maxU := \begin{pmatrix} 2857.669 \\ 7245.839 \\ 3855.998 \\ 8272.945 \\ 532.4983 \\ 5515.129 \\ 731.6878 \\ 6323.05 \end{pmatrix} \cdot psi \qquad maxY := \begin{pmatrix} 2800.524 \\ 6942.232 \\ 3815.599 \\ 7923.911 \\ 483.2235 \\ 5278.989 \\ 705.6795 \\ 6080.801 \end{pmatrix} \cdot psi \qquad maxS := \begin{pmatrix} 1428.834 \\ 3622.919 \\ 1927.999 \\ 4136.472 \\ 266.2491 \\ 2757.565 \\ 365.8439 \\ 3161.525 \end{pmatrix} \cdot psi$$

$i := 1..8$

New stresses including the scale factors:

See Figures

$$maxPrin_i := factor_i \cdot maxU_i \qquad maxPrin = \begin{pmatrix} 11212 \\ 18407 \\ 12347 \\ 17703 \\ 6638 \\ 21358 \\ 7560 \\ 20459 \end{pmatrix} psi$$

Pages 5.8-13 to 20

$$\begin{pmatrix} 5.8-4 \\ 5.8-5 \\ 5.8-6 \\ 5.8-7 \\ 5.8-8 \\ 5.8-9 \\ 5.8-10 \\ 5.8-11 \end{pmatrix}$$

See Figures

$$maxYield_i := factor_i \cdot maxY_i \qquad maxYield = \begin{pmatrix} 10987 \\ 17636 \\ 12218 \\ 16956 \\ 6023 \\ 20443 \\ 7292 \\ 19675 \end{pmatrix} psi$$

Pages 5.8-21 to 28

$$\begin{pmatrix} 5.8-12 \\ 5.8-13 \\ 5.8-14 \\ 5.8-15 \\ 5.8-16 \\ 5.8-17 \\ 5.8-18 \\ 5.8-19 \end{pmatrix}$$

$$maxShear_i := factor_i \cdot maxS_i \qquad maxShear = \begin{pmatrix} 5606 \\ 9204 \\ 6174 \\ 8851 \\ 3319 \\ 10679 \\ 3780 \\ 10229 \end{pmatrix} psi$$

Margins of Safety:

$$MSu_i := \frac{Ftu}{FSu \cdot maxPrin_i} - 1 \qquad MSu = \begin{pmatrix} 1.76 \\ 0.681 \\ 1.506 \\ 0.748 \\ 3.661 \\ 0.449 \\ 3.092 \\ 0.512 \end{pmatrix}$$

$$MSy_i := \frac{Fty}{FSy \cdot maxYield_i} - 1 \qquad MSy = \begin{pmatrix} 3.026 \\ 1.508 \\ 2.62 \\ 1.609 \\ 6.343 \\ 1.164 \\ 5.066 \\ 1.248 \end{pmatrix}$$

$$MSs_i := \frac{Fsu}{FSu \cdot maxShear_i} - 1 \qquad MSs = \begin{pmatrix} 2.49 \\ 1.126 \\ 2.169 \\ 1.21 \\ 4.895 \\ 0.832 \\ 4.176 \\ 0.913 \end{pmatrix}$$

$MSu := \min(MSu)$ $\quad MSu = 0.449$ Ultimate - using principal - Load Case 6, Figure 5.8-9

$MSy := \min(MSy)$ $\quad MSy = 1.164$ Yield - using Von-Mises - Load Case 6, Figure 5.8-9

$MSs := \min(MSs)$ $\quad MSs = 0.832$ Shear - using shear - Load Case 6, Figure 5.8-9

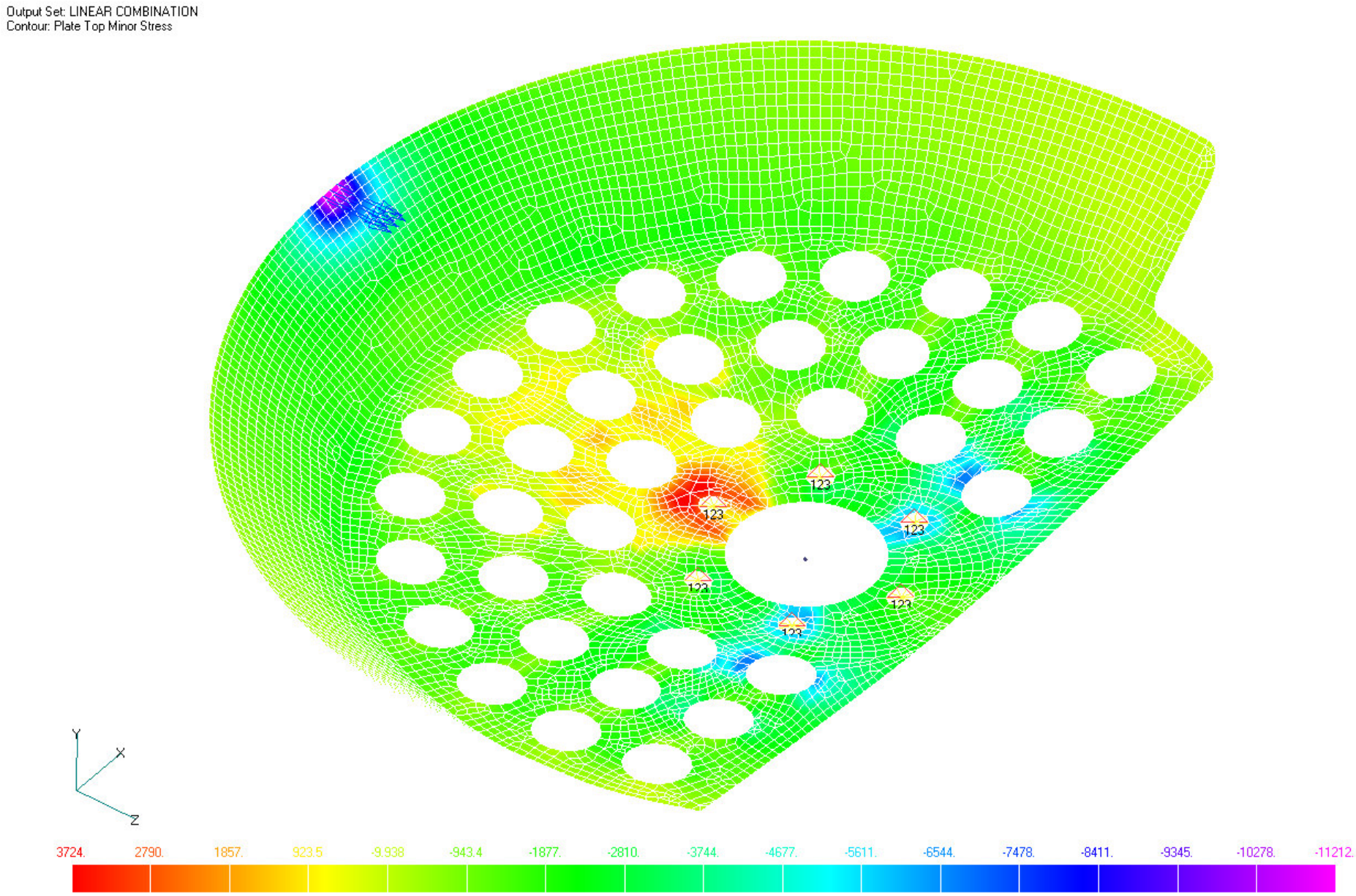
Output Set: LINEAR COMBINATION
Contour: Plate Top Minor Stress
123
123
123
123
123
123
Y
X
Z
3724.
2790.
1857.
923.5
-9.938
-943.4
-1877.
-2810.
-3744.
-4677.
-5611.
-6544.
-7478.
-8411.
-9345.
-10278.
-11212.

Figure 5.8-4

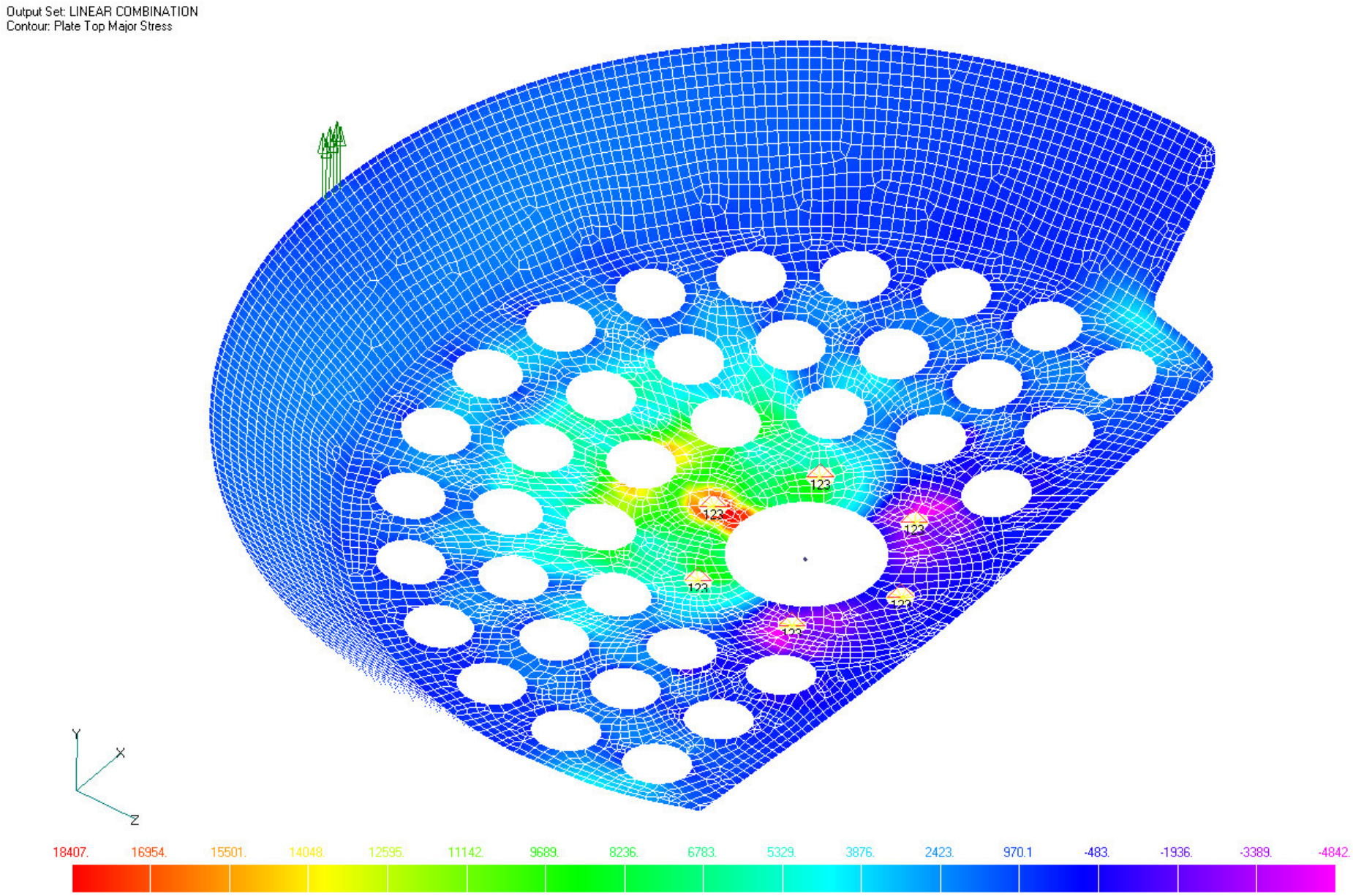
Output Set: LINEAR COMBINATION
Contour: Plate Top Major Stress
123
123
123
123
123
123
Y
X
Z
18407.
16954.
15501.
14048.
12595.
11142.
9689.
8236.
6783.
5329.
3876.
2423.
970.1
-483.
-1936.
-3389.
-4842.

Figure 5.8-5

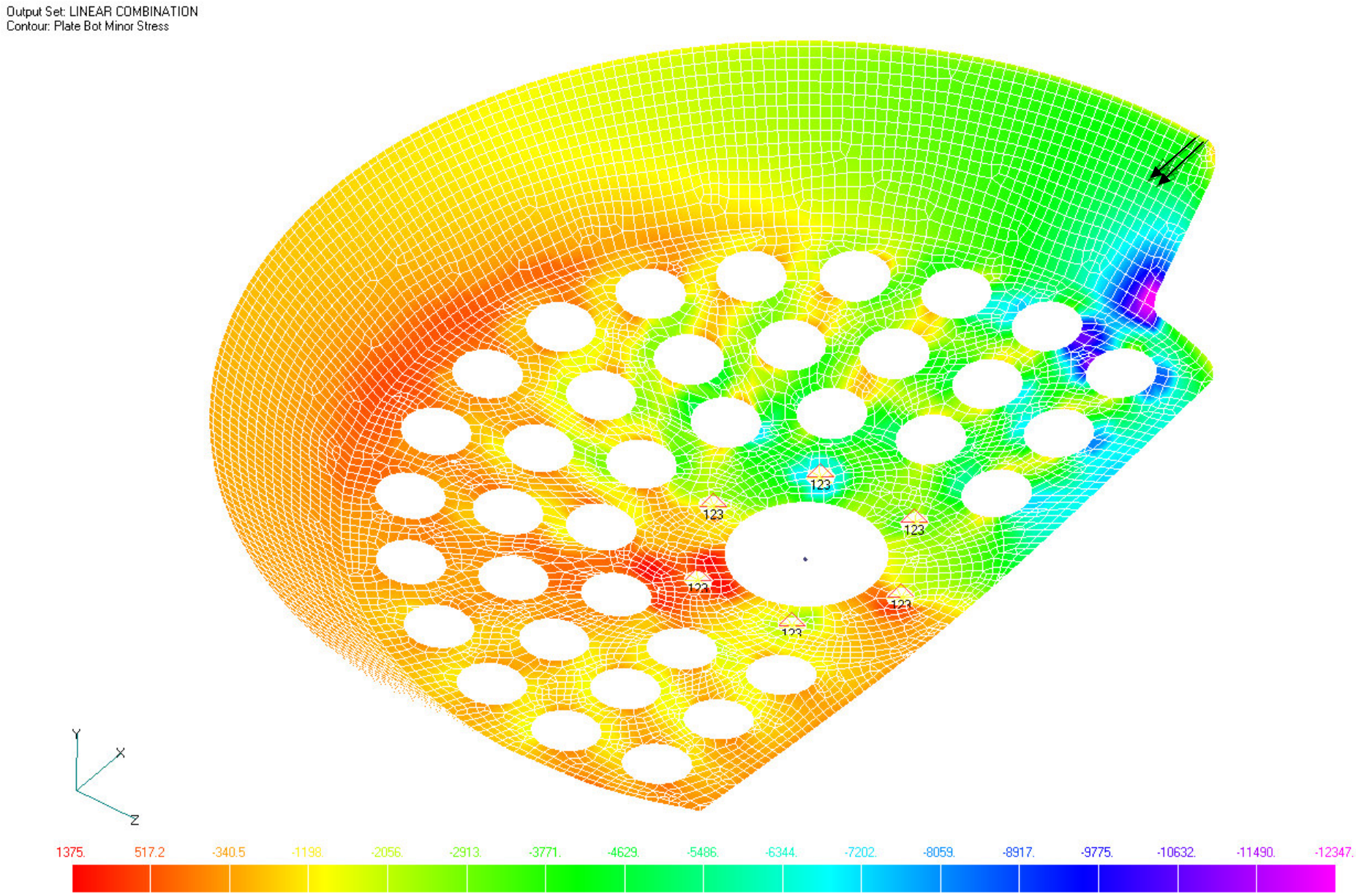
Output Set: LINEAR COMBINATION
Contour: Plate Bot Minor Stress
123
123
123
123
123
123
Y
X
Z
1375.
517.2
-340.5
-1198.
-2056.
-2913.
-3771.
-4629.
-5486.
-6344.
-7202.
-8059.
-8917.
-9775.
-10632.
-11490.
-12347.

Figure 5.8-6

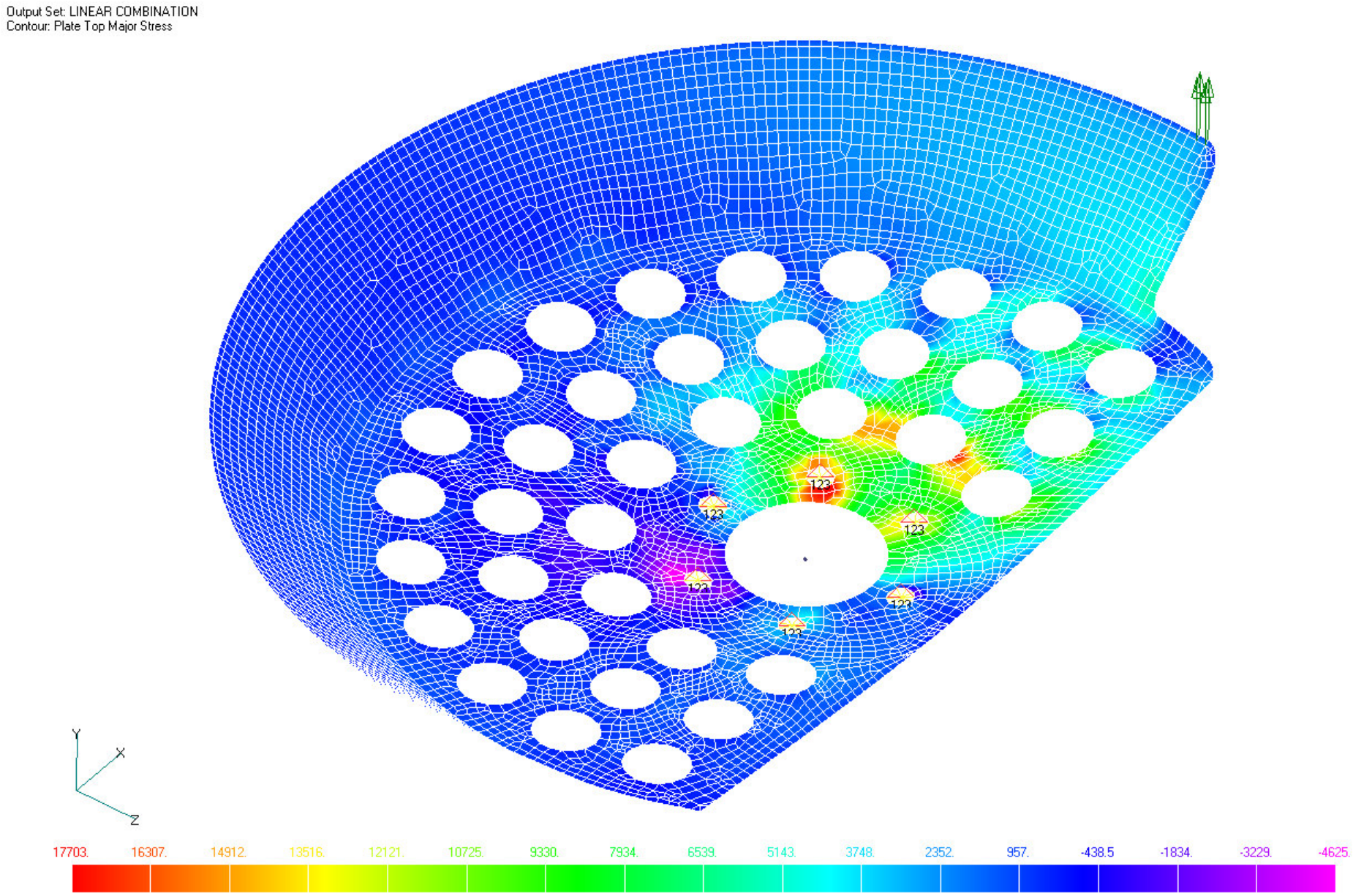
Output Set: LINEAR COMBINATION
Contour: Plate Top Major Stress
123
123
123
123
123
123
Y
X
Z
17703.
16307.
14912.
13516.
12121.
10725.
9330.
7934.
6539.
5143.
3748.
2352.
957.
-438.5
-1834.
-3229.
-4625.

Figure 5.8-7

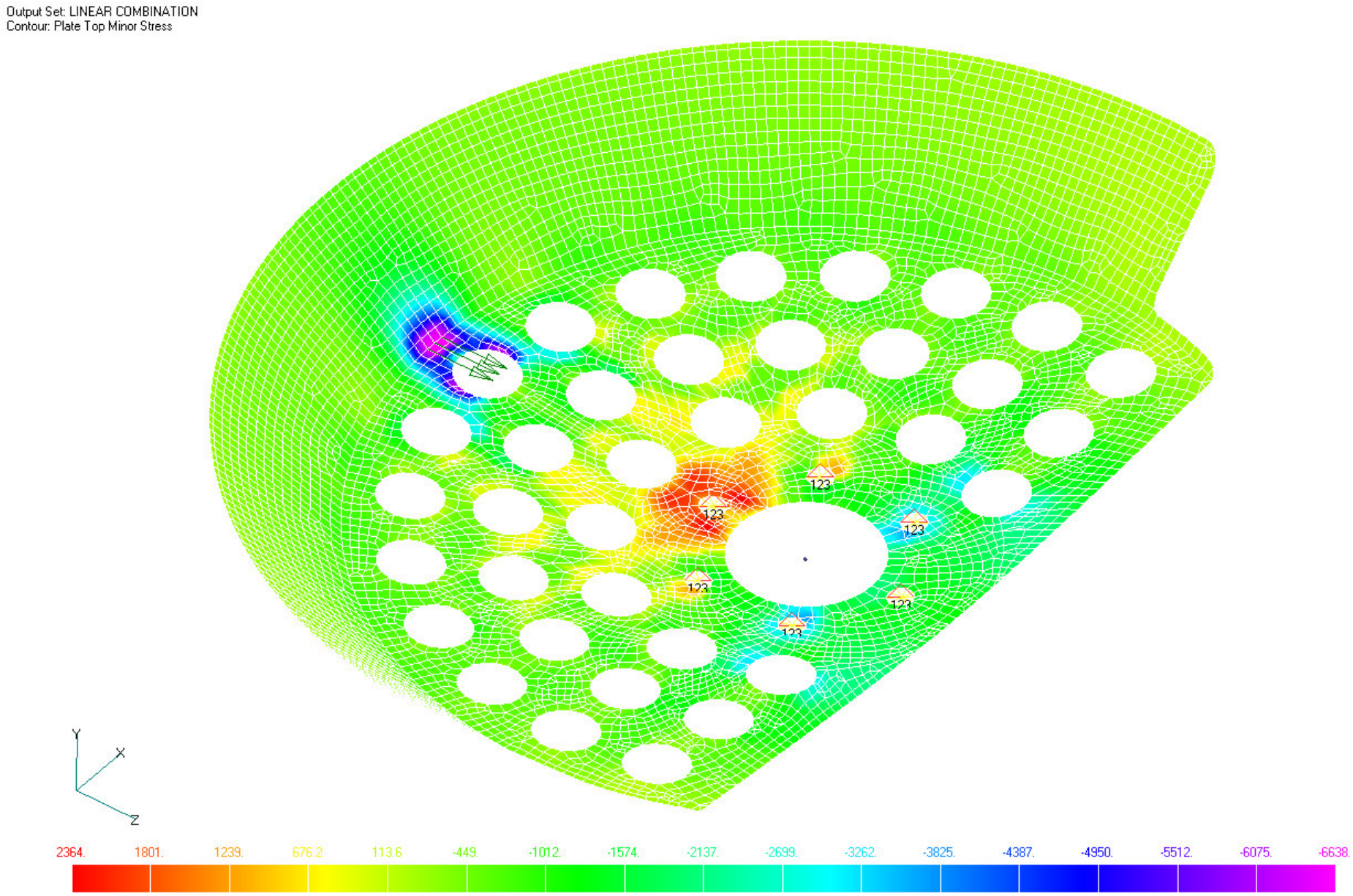
Output Set: LINEAR COMBINATION
Contour: Plate Top Minor Stress
123
123
123
123
123
123
123
Y
X
Z
2364.
1801.
1239.
676.2
113.6
-449.
-1012.
-1574.
-2137.
-2699.
-3262.
-3825.
-4387.
-4950.
-5512.
-6075.
-6638.

Figure 5.8-8

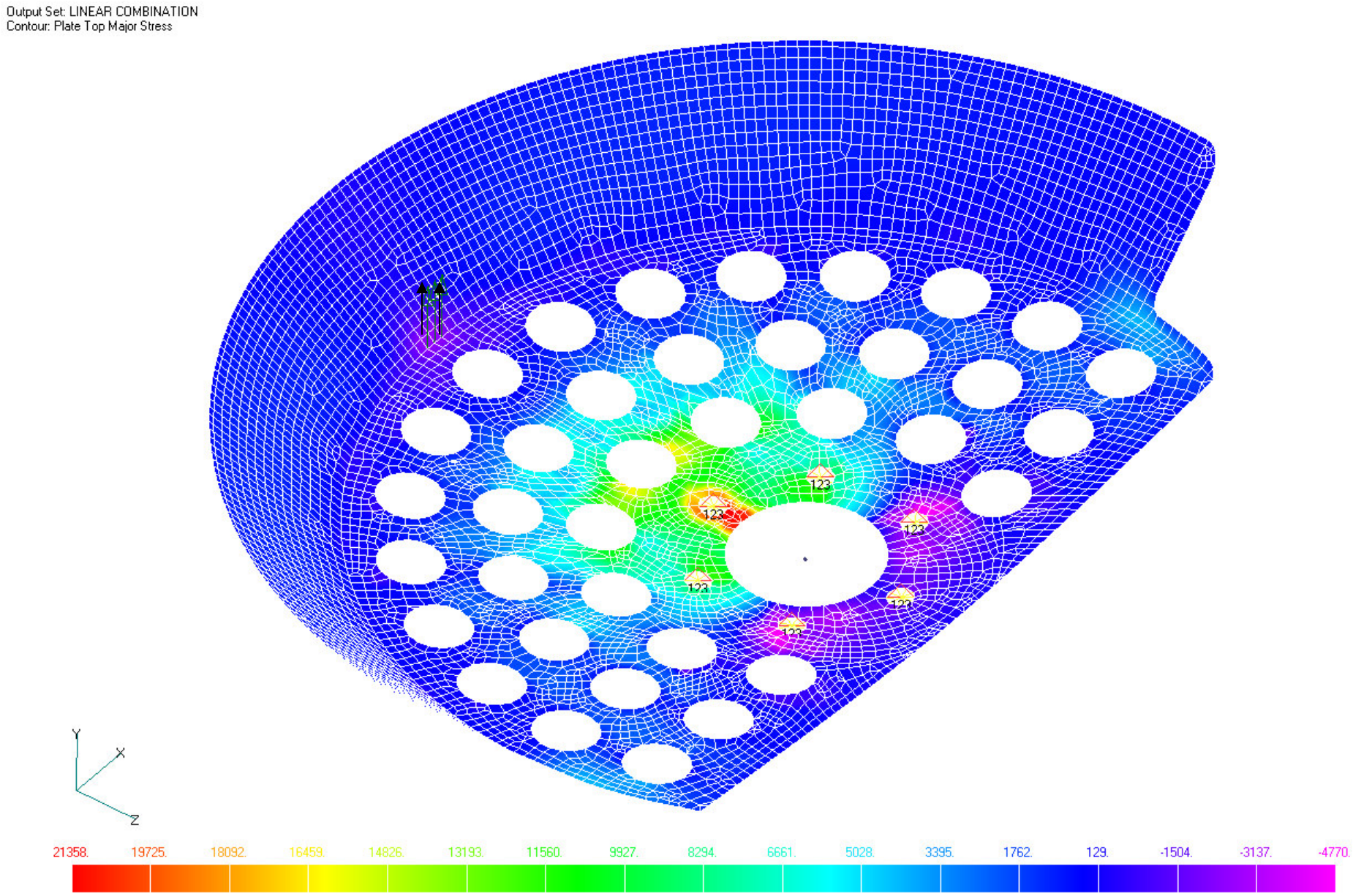
Output Set: LINEAR COMBINATION
Contour: Plate Top Major Stress
123
123
123
123
123
Y
X
Z
21358.
19725.
18092.
16459.
14826.
13193.
11560.
9927.
8294.
6661.
5028.
3395.
1762.
129.
-1504.
-3137.
-4770.

Figure 5.8-9

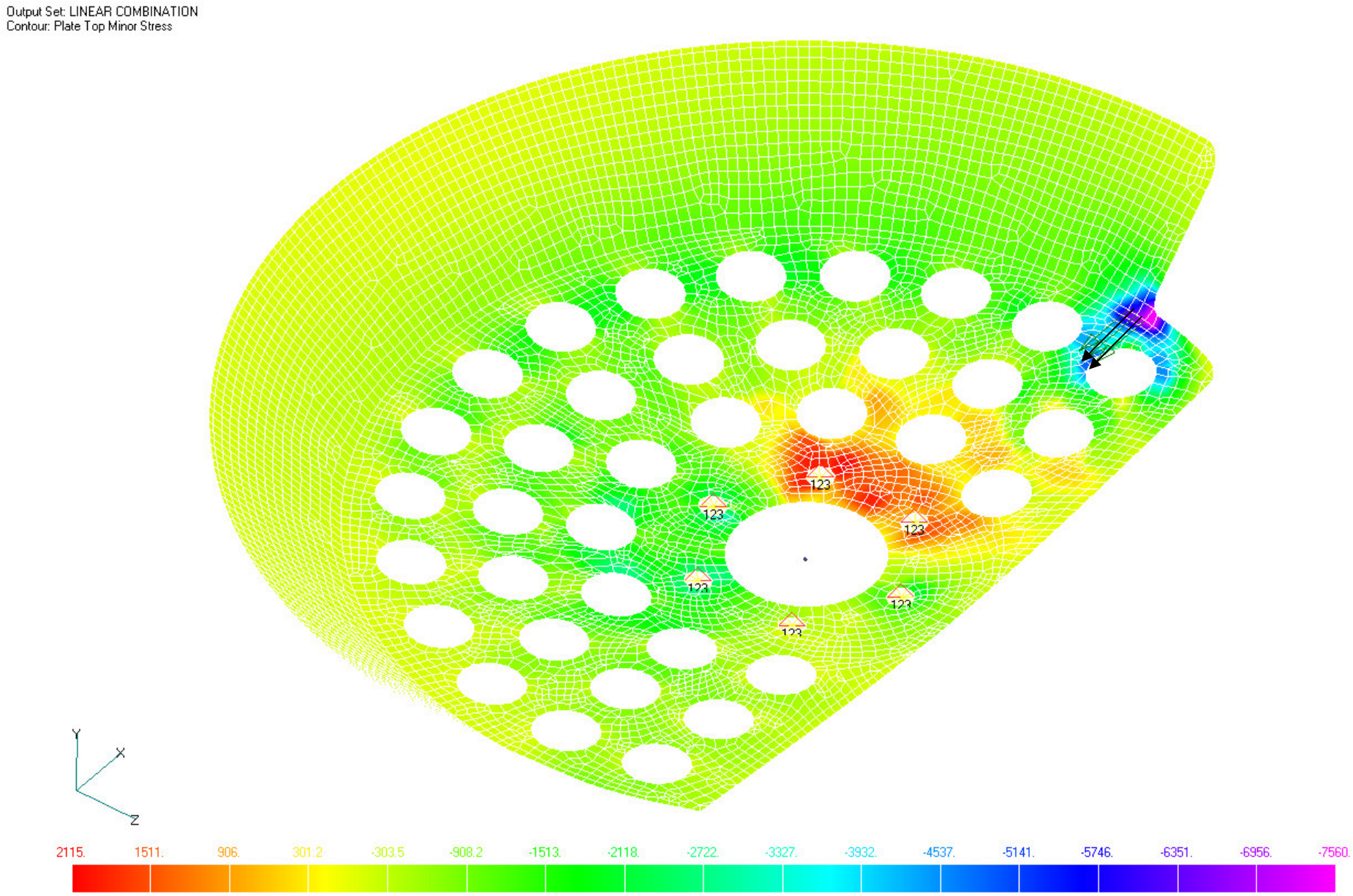
Output Set: LINEAR COMBINATION
Contour: Plate Top Minor Stress
123
123
123
123
123
123
Y
X
Z
2115.
1511.
906.
301.2
-303.5
-908.2
-1513.
-2118.
-2722.
-3327.
-3932.
-4537.
-5141.
-5746.
-6351.
-6956.
-7560.

Figure 5.8-10

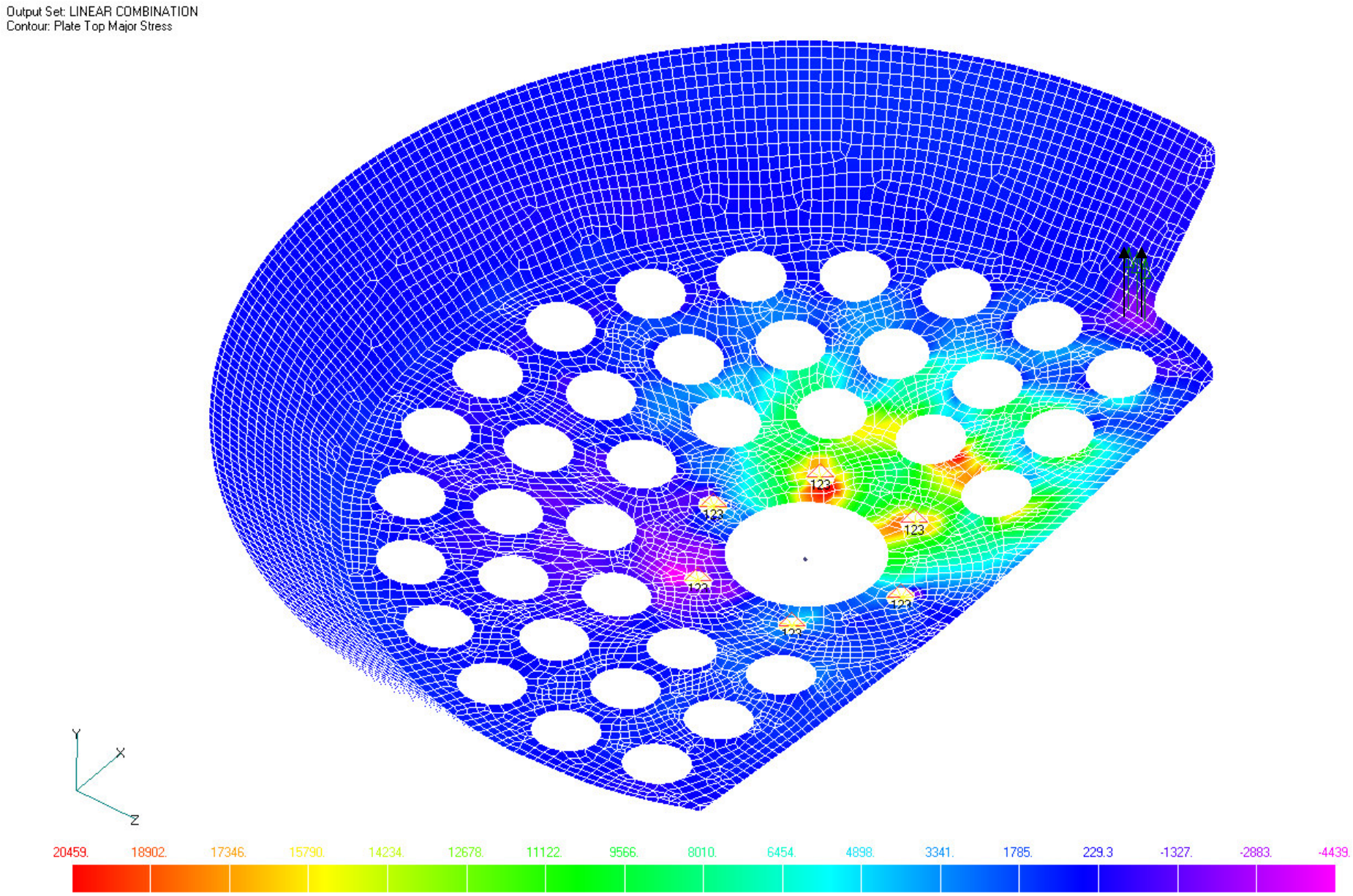
Output Set: LINEAR COMBINATION
Contour: Plate Top Major Stress
123
123
123
123
123
Y
X
Z
20459.
18902.
17346.
15790.
14234.
12678.
11122.
9566.
8010.
6454.
4898.
3341.
1785.
229.3
-1327.
-2883.
-4439.

Figure 5.8-11

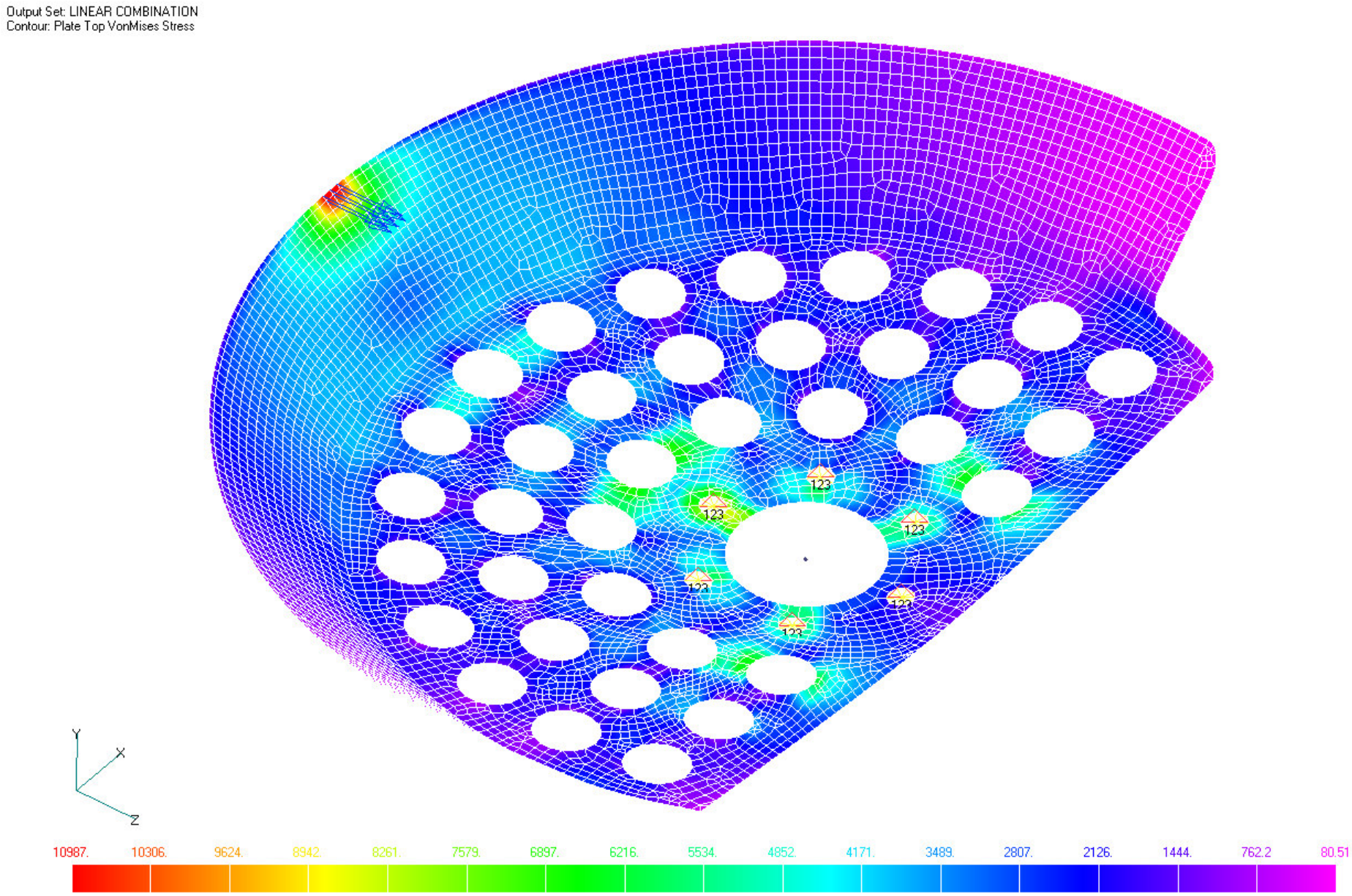
Output Set: LINEAR COMBINATION
Contour: Plate Top VonMises Stress
123
123
123
123
123
Y
X
Z
10987.
10306.
9624.
8942.
8261.
7579.
6897.
6216.
5534.
4852.
4171.
3489.
2807.
2126.
1444.
762.2
80.51

Figure 5.8-12

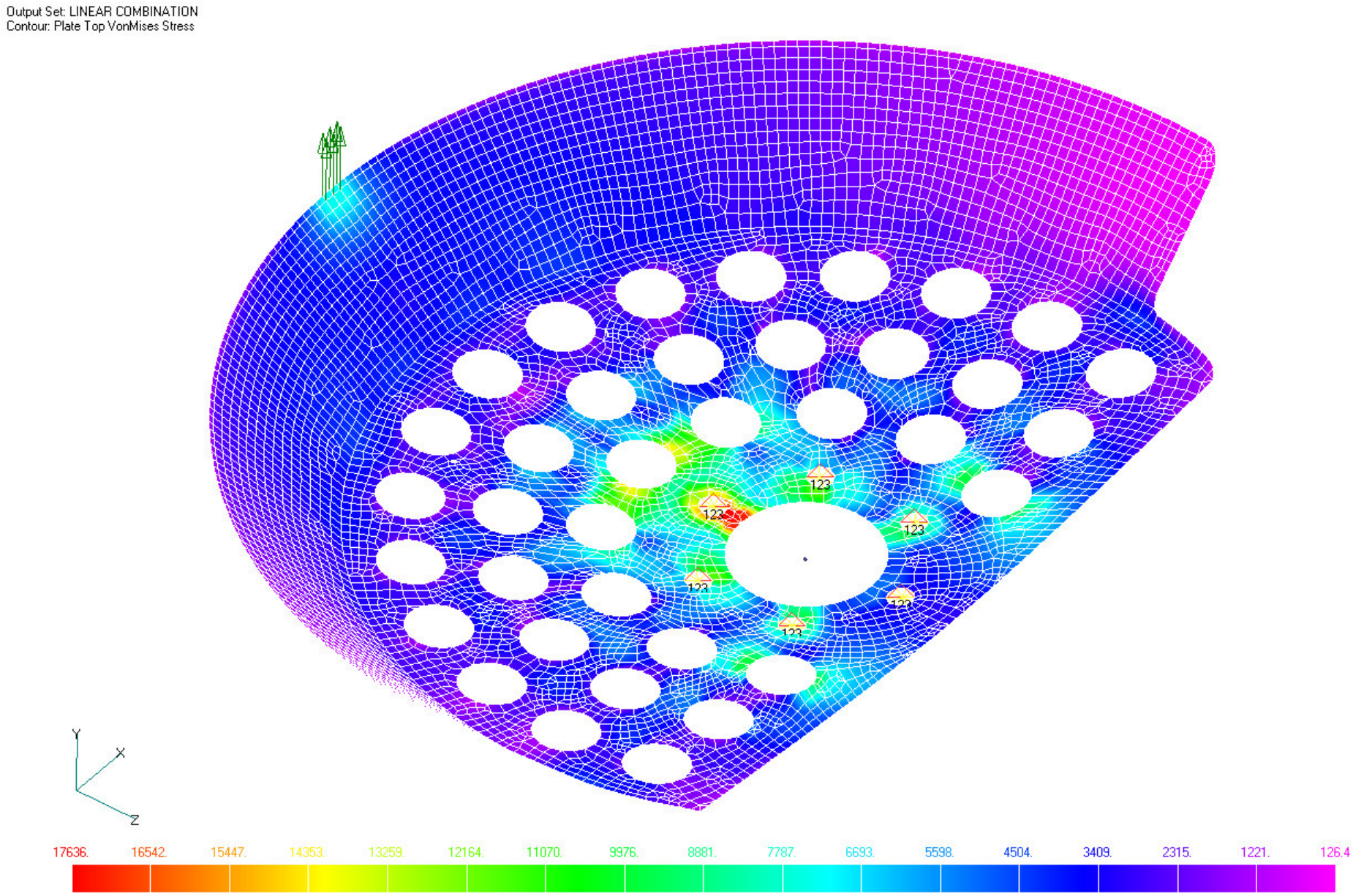
Output Set: LINEAR COMBINATION
Contour: Plate Top VonMises Stress
123
123
123
123
123
Y
X
Z
17636.
16542.
15447.
14353.
13259.
12164.
11070.
9976.
8881.
7787.
6693.
5598.
4504.
3409.
2315.
1221.
126.4

Figure 5.8-13

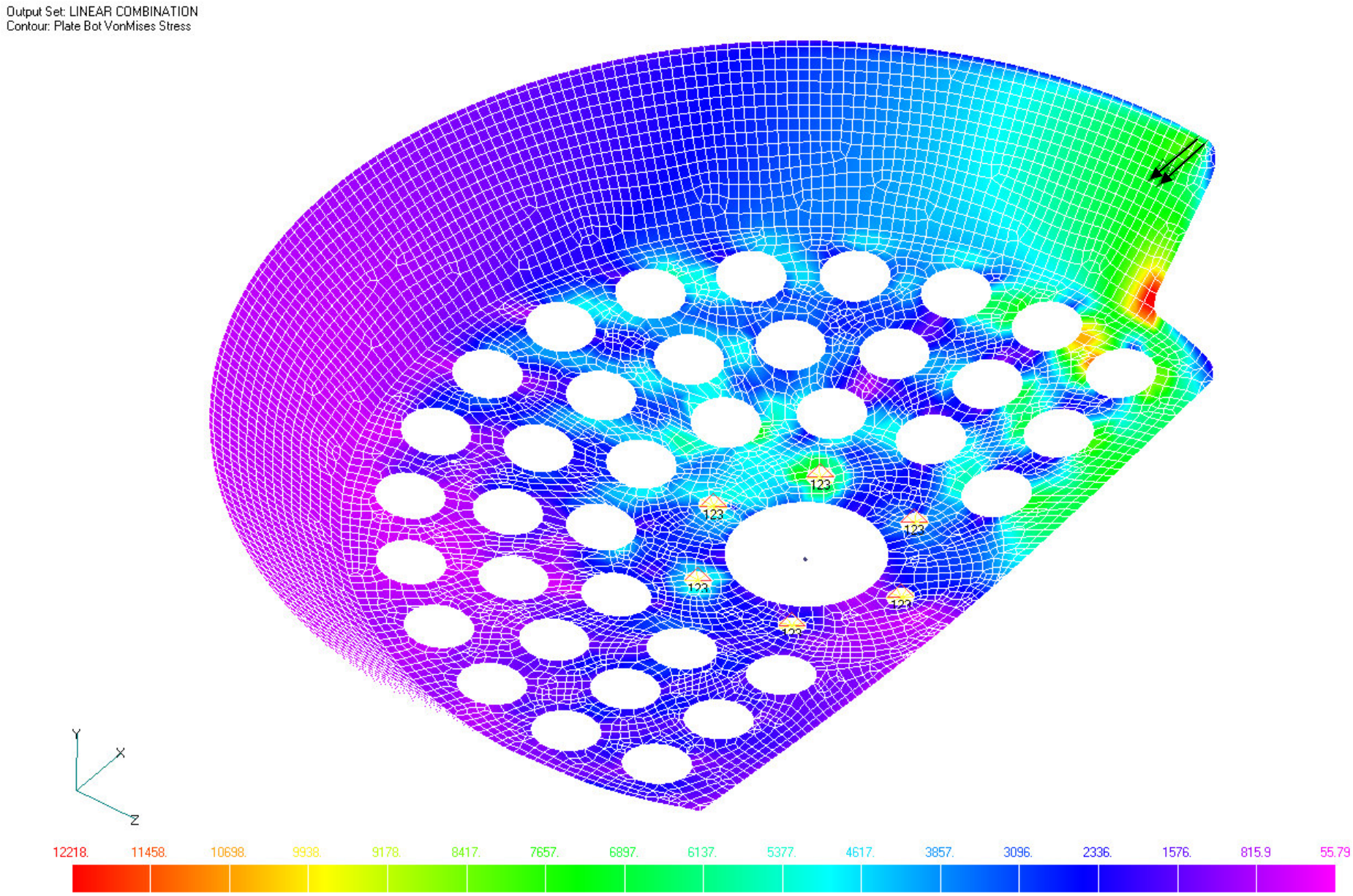
Output Set: LINEAR COMBINATION
Contour: Plate Bot VonMises Stress
123
123
123
123
123
Y
X
Z
12218.
11458.
10698.
9938.
9178.
8417.
7657.
6897.
6137.
5377.
4617.
3857.
3096.
2336.
1576.
815.9
55.79

Figure 5.8-14

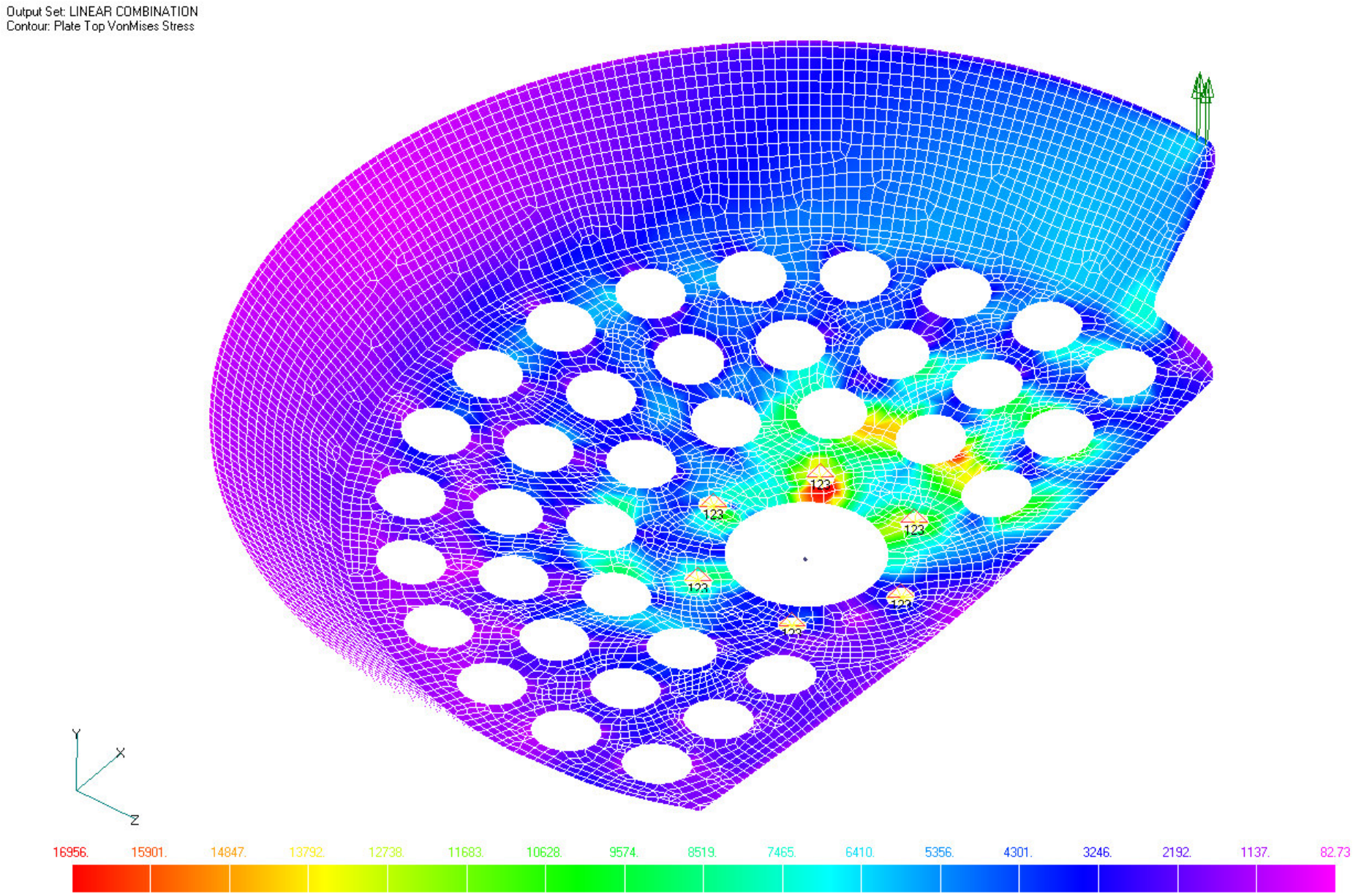
Output Set: LINEAR COMBINATION
Contour: Plate Top VonMises Stress
123
123
123
123
123
Y
X
Z
16956.
15901.
14847.
13792.
12738.
11683.
10628.
9574.
8519.
7465.
6410.
5356.
4301.
3246.
2192.
1137.
82.73

Figure 5.8-15

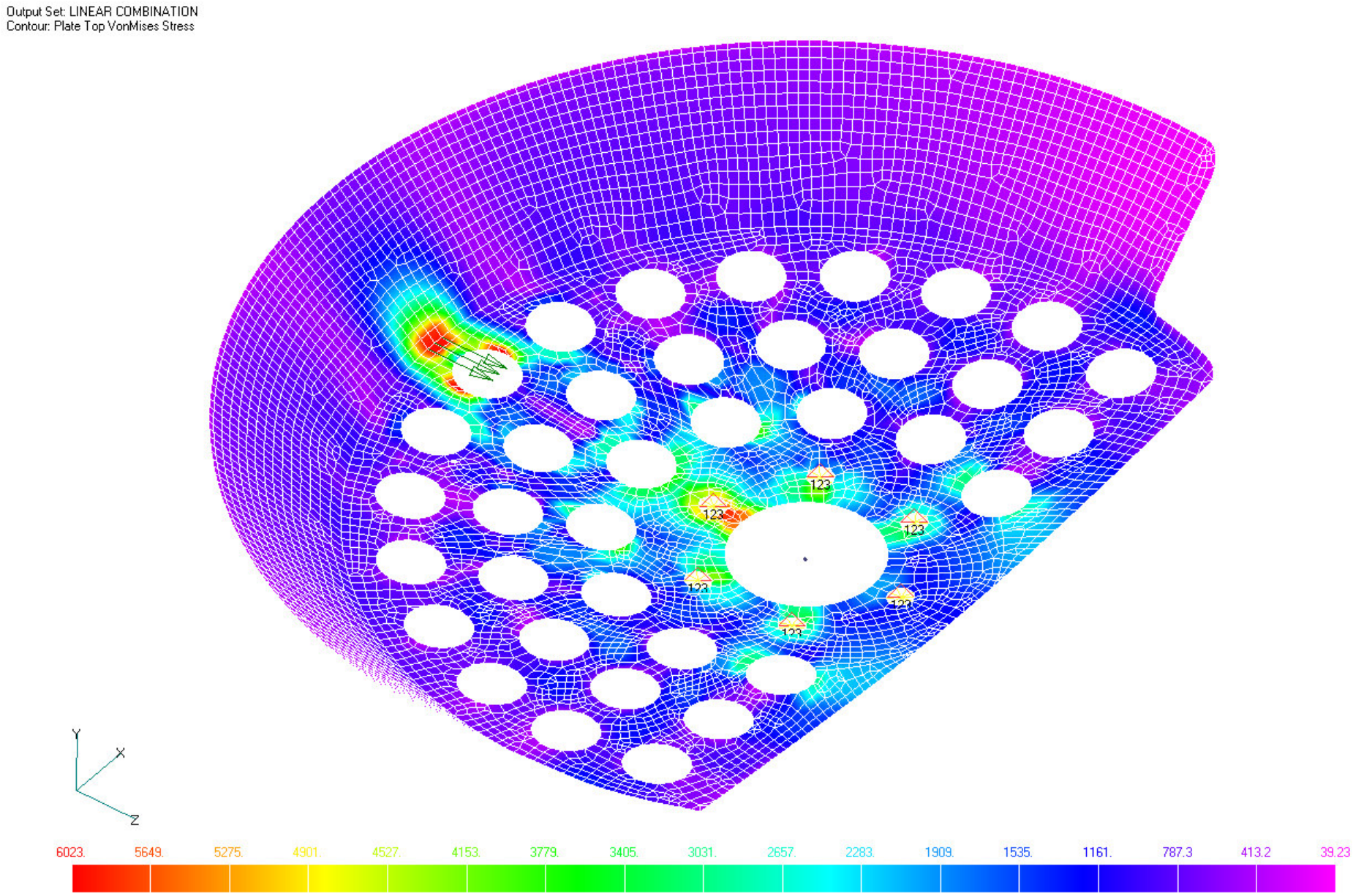
Output Set: LINEAR COMBINATION
Contour: Plate Top VonMises Stress
123
123
123
123
123
Y
X
Z
6023.
5649.
5275.
4901.
4527.
4153.
3779.
3405.
3031.
2657.
2283.
1909.
1535.
1161.
787.3
413.2
39.23

Figure 5.8-16

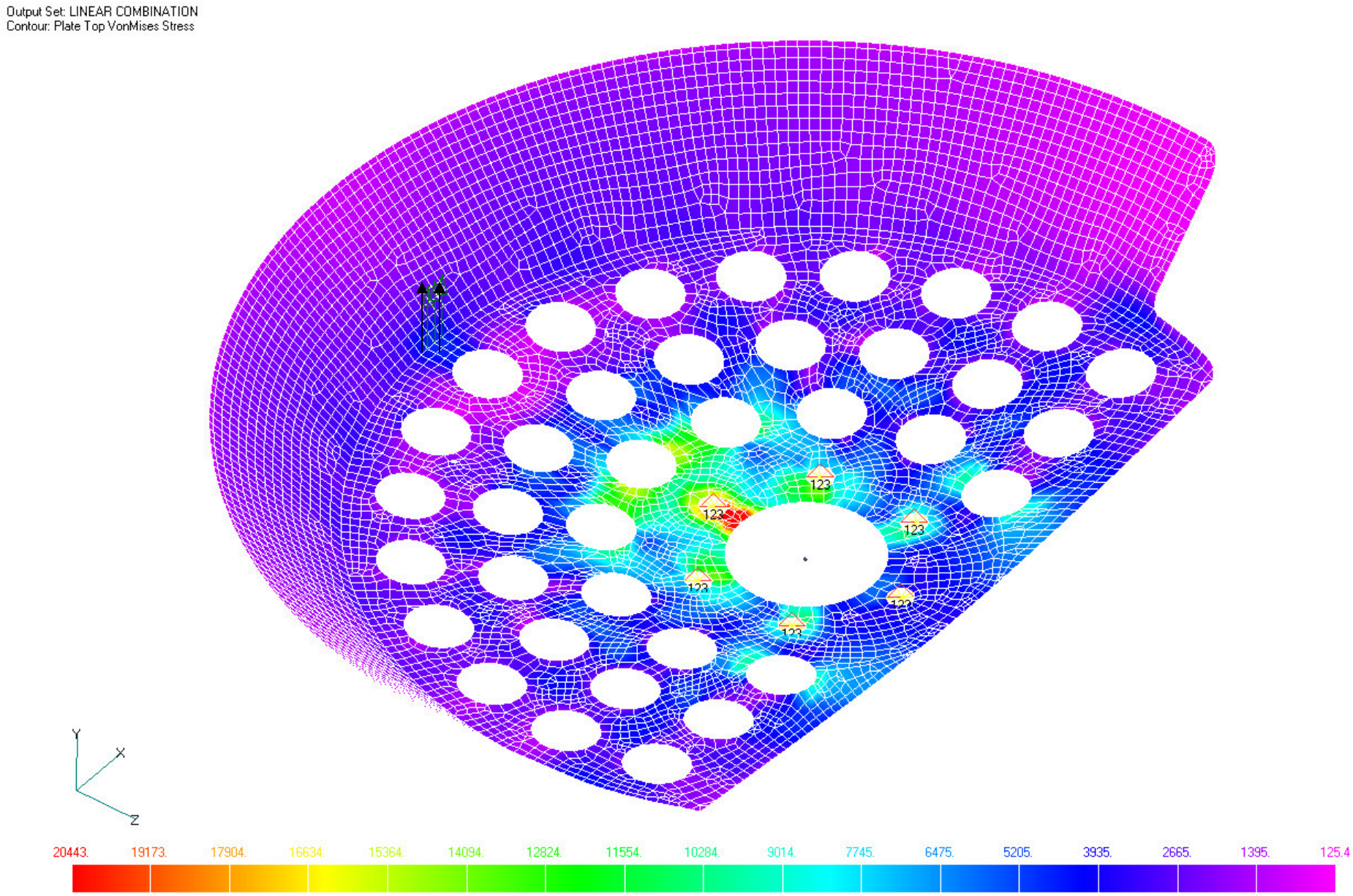
Output Set: LINEAR COMBINATION
Contour: Plate Top VonMises Stress
123
123
123
123
123
Y
X
Z
20443.
19173.
17904.
16634.
15364.
14094.
12824.
11554.
10284.
9014.
7745.
6475.
5205.
3935.
2665.
1395.
125.4

Figure 5.8-17

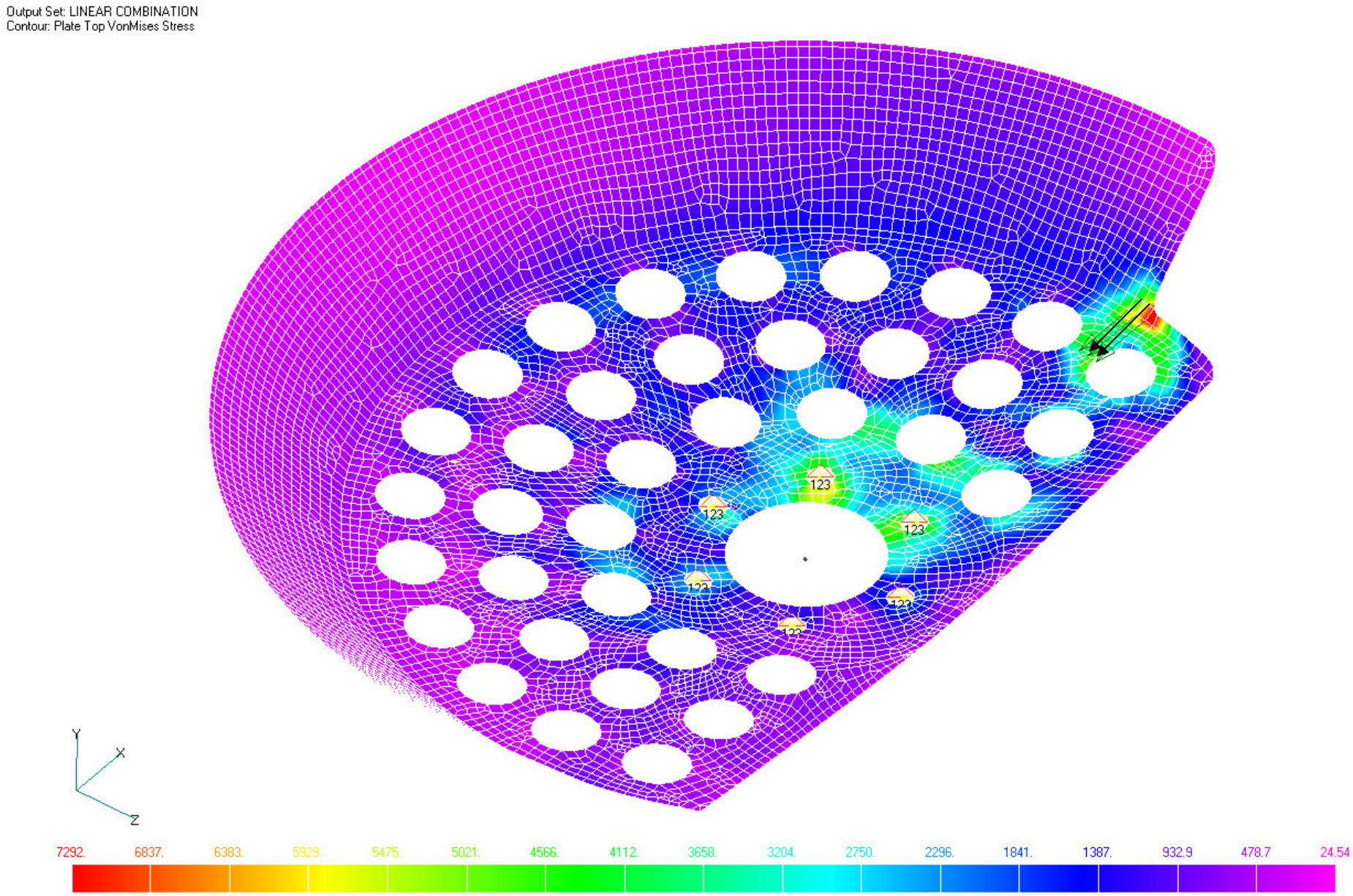
Output Set: LINEAR COMBINATION
Contour: Plate Top VonMises Stress
123
123
123
123
123
Y
X
Z
7292.
6837.
6383.
5929.
5475.
5021.
4566.
4112.
3658.
3204.
2750.
2296.
1841.
1387.
932.9
478.7
24.54

Figure 5.8-18

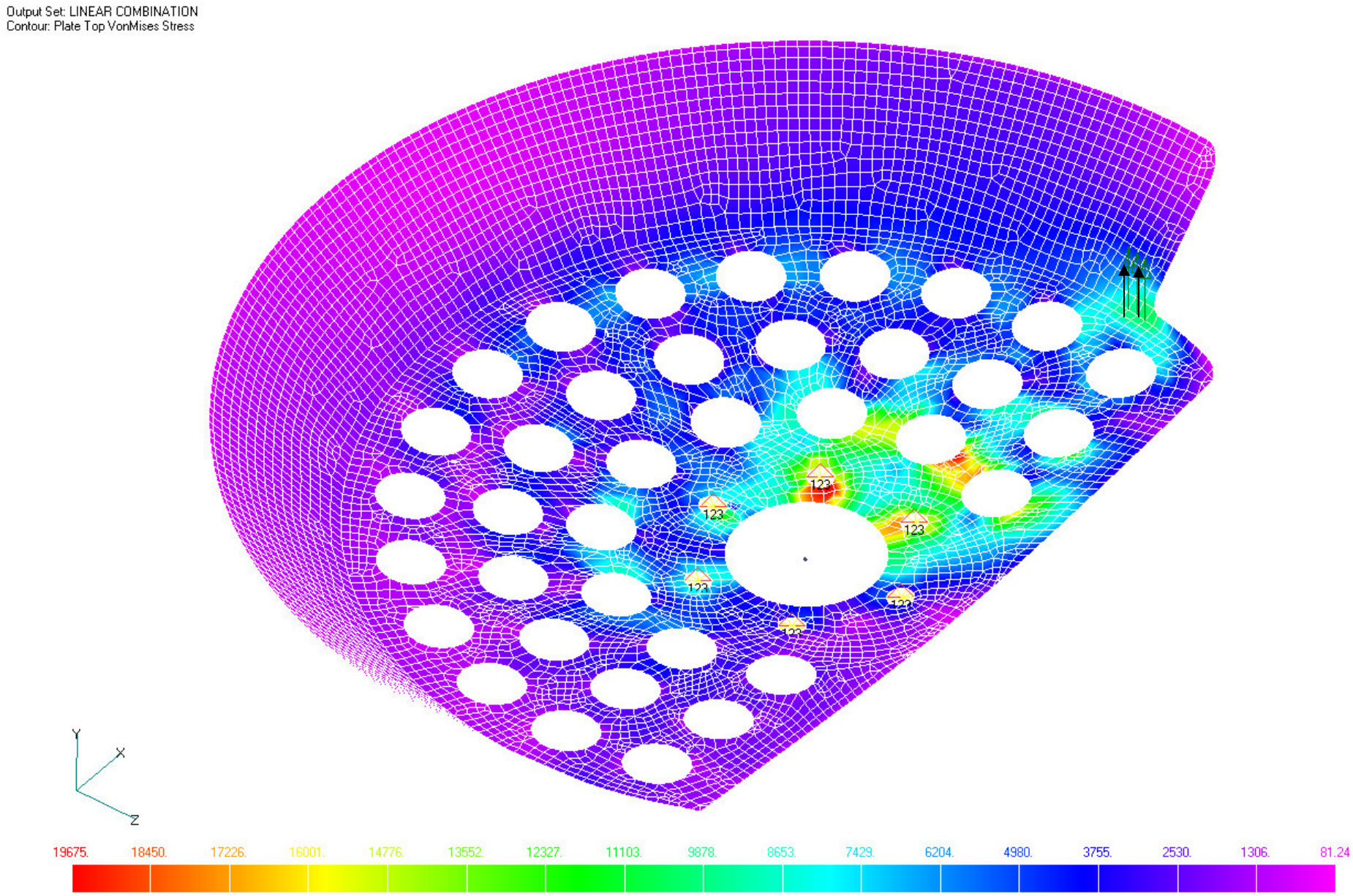
Output Set: LINEAR COMBINATION
Contour: Plate Top VonMises Stress
123
123
123
123
123
Y
X
Z
19675.
18450.
17226.
16001.
14776.
13552.
12327.
11103.
9878.
8653.
7429.
6204.
4980.
3755.
2530.
1306.
81.24

Figure 5.8-19

5.9 EVA Connector Panel Assembly

Margins of Safety

Table 5.9-1: Minimum Margin of Safety Summary

Part / Dwg Number	Part Name / Description	Material & Heat Treatment	Critical Load Condition	Failure Mode	Margin of Safety	Reference Page
SEG39136085	EVA Connector Panel	AL ALY 6061-T651	Kickload	Ultimate	0.162 (u)	5.9-14

Table 5.9-2: Fasteners Minimum Margin of Safety Summary

Part / Dwg Number	Part Name / Description	Material & Heat Treatment	Failure Mode	Margin of Safety	Reference Page
NAS1351N3-10	Fasteners connecting Connector Panel Assembly to Lower USS-02 Tube Assembly	A286	Total Tension Yield	0.1 (y)	5.9-31

Table 5.9-3: Fail-Safe Fastener Minimum Margin of Safety Summary

Part / Dwg Number	Part Name / Description	Material & Heat Treatment	Failure Mode	Margin of Safety	Reference Page
NAS1351N3-10	Fasteners connecting Connector Panel Assembly to Lower USS-02 Tube Assembly	A286	Total Thread Shear Ultimate (Flange)	0.19 (u)	5.9-32

Notes:

1. Factors of Safety are 2.0 for Ultimate and 1.25 for Yield.
2. Applied liftoff/landing loads and 125 lb kickload.
3. u = ultimate; y = yield

Factors of Safety

The hardware is designed with a yield factor of 1.25 and an ultimate factor of 2.0 against limit loads.

Description of Structure

Figure 5.9-1 below shows the locations of the EVA Connector Panel on the Lower USS-02. The panel is machined out of 6061-T651 Aluminum Alloy plate. The EVA Connector Panel bolts to the Lower USS-02.

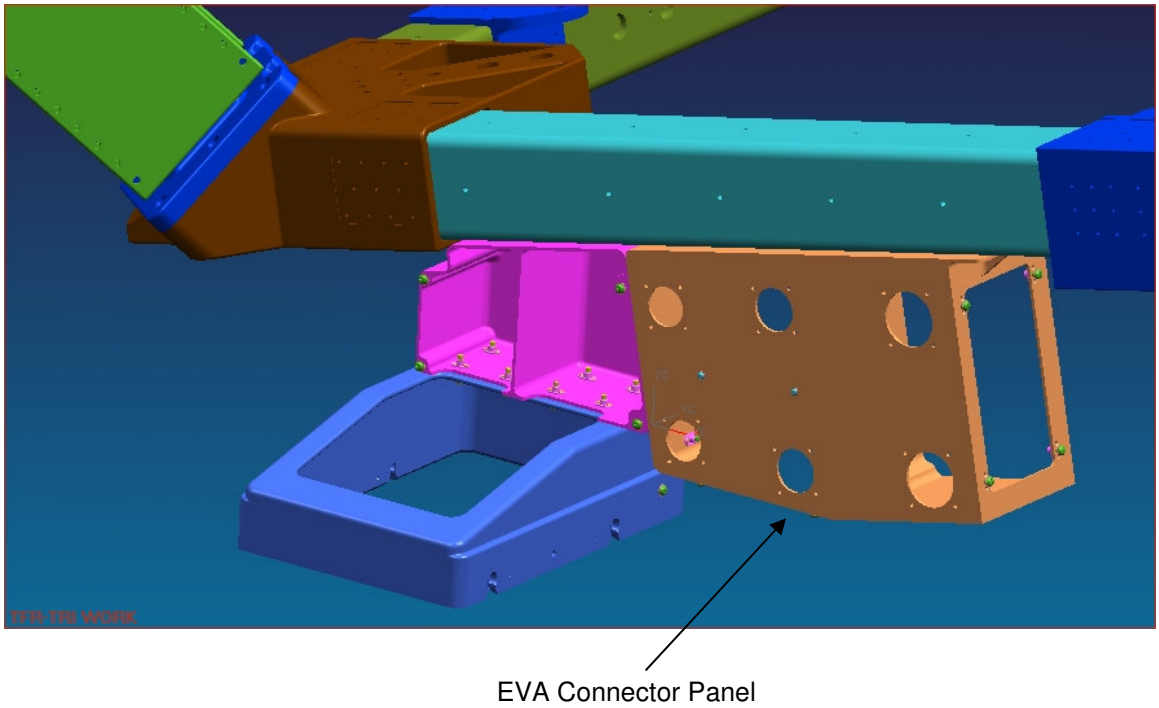

Figure 5.9-1 : Location of EVA Connector Panel on Lower USS-02
(Note: Figure does not show cover plates)

Description of Model

A FE model was built for the EVA Connector Panel hardware using FEMAP.

1. The part was modeled as CQUAD4, CTRIA3, and CBAR elements.
2. The bolt holes are represented with SPC's with DOF's 1, 2, and 3.

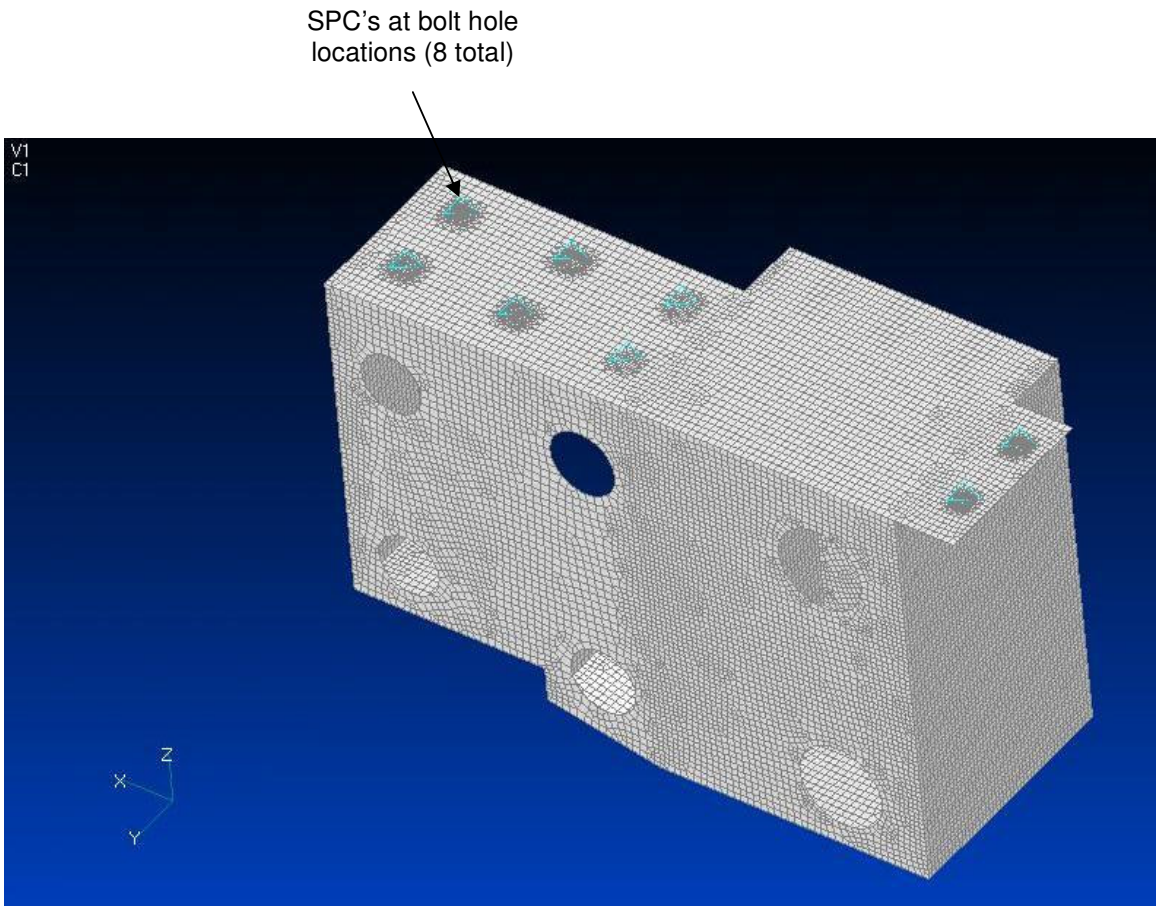

Figure 5.9-2 : FEMAP Model of EVA Connector Panel

MSC/NASTRAN v.2005 was used as a solver for analyzing the math model of the EVA Connector Panel. Stresses were recovered and sorted to find the maximum of Principal, Von-Mises, and Shear in the EVA Connector Panel. SPC forces were recovered at the bolt locations.

Table below shows detail of model inputs.

Table 5.9-4: Inputs of Finite Element Model of EVA Connector Panel

DESCRIPTION	NODE #	ELEM #	PROP	MAT'L
EVA Connector Panel	4 – 36027	1 – 34352	1, 3-6	1 – Al 6061-T651

Model Checks

Rigid body checks were performed using MSC/NASTRAN. Results are shown below. The KGG, KNN and KFF matrices all pass with low strain energies.

```
*** USER INFORMATION MESSAGE 7570 (GPWG1D)
     RESULTS OF RIGID BODY CHECKS OF MATRIX KGG      (G-SET)  FOLLOW:
     PRINT RESULTS IN ALL SIX DIRECTIONS AGAINST THE LIMIT OF   1.000000E-02
           DIRECTION        STRAIN ENERGY        PASS/FAIL
           ---------        -------------        ---------
             1               4.415551E-08          PASS
             2               1.130938E-07          PASS
             3               3.568448E-08          PASS
             4               1.886341E-06          PASS
             5               4.821504E-07          PASS
             6               1.460552E-06          PASS

*** USER INFORMATION MESSAGE 7570 (GPWG1D)
     RESULTS OF RIGID BODY CHECKS OF MATRIX KNN      (N-SET)  FOLLOW:
     PRINT RESULTS IN ALL SIX DIRECTIONS AGAINST THE LIMIT OF   1.000000E-02
           DIRECTION        STRAIN ENERGY        PASS/FAIL
           ---------        -------------        ---------
             1               4.415551E-08          PASS
             2               1.130938E-07          PASS
             3               3.568448E-08          PASS
             4               1.886341E-06          PASS
             5               4.821504E-07          PASS
             6               1.460552E-06          PASS

*** USER INFORMATION MESSAGE 7570 (GPWG1D)
     RESULTS OF RIGID BODY CHECKS OF MATRIX KFF      (F-SET)  FOLLOW:
     PRINT RESULTS IN ALL SIX DIRECTIONS AGAINST THE LIMIT OF   1.000000E-02
           DIRECTION        STRAIN ENERGY        PASS/FAIL
           ---------        -------------        ---------
             1               4.415551E-08          PASS
             2               1.130938E-07          PASS
             3               3.568448E-08          PASS
             4               1.886341E-06          PASS
             5               4.821504E-07          PASS
             6               1.460552E-06          PASS

*** USER INFORMATION MESSAGE 7570 (GPWG1D)
     RESULTS OF RIGID BODY CHECKS OF MATRIX KAA1     (A-SET)  FOLLOW:
     PRINT RESULTS IN ALL SIX DIRECTIONS AGAINST THE LIMIT OF   1.000000E-02
           DIRECTION        STRAIN ENERGY        PASS/FAIL
           ---------        -------------        ---------
             1               4.415551E-08          PASS
             2               1.130938E-07          PASS
             3               3.568448E-08          PASS
             4               1.886341E-06          PASS
             5               4.821504E-07          PASS
             6               1.460552E-06          PASS
```

A further check is that of rigid body modes. The first 10 unconstrained modes are shown below. There are six rigid body modes (~ 0.0), and then good separation with the first non-rigid body mode.

Table 5.9-5: Eigenvalue Summary of EVA Connector Panel

REAL EIGENVALUES						
MODE NO.	EXTRACTION ORDER	EIGENVALUE	RADIANS	CYCLES	GENERALIZED MASS	GENERALIZED STIFFNESS
1	1	-2.169E-04	1.473E-02	2.344E-03	1.000E+00	-2.169E-04
2	2	-1.946E-05	4.411E-03	7.021E-04	1.000E+00	-1.946E-05
3	3	1.231E-05	3.508E-03	5.584E-04	1.000E+00	1.231E-05
4	4	6.259E-05	7.911E-03	1.259E-03	1.000E+00	6.259E-05
5	5	1.201E-04	1.096E-02	1.744E-03	1.000E+00	1.201E-04
6	6	1.756E-04	1.325E-02	2.109E-03	1.000E+00	1.756E-04
7	7	3.745E+06	1.935E+03	3.080E+02	1.000E+00	3.745E+06
8	8	6.299E+06	2.510E+03	3.995E+02	1.000E+00	6.299E+06
9	9	8.288E+06	2.879E+03	4.582E+02	1.000E+00	8.288E+06
10	10	9.429E+06	3.071E+03	4.887E+02	1.000E+00	9.429E+06

Additionally, the mass of the FEM (.017483*g = 6.75 lb) matches closely the mass of the actual hardware (EVA Connector Panel without electrical components = 6.8 lb).

DIRECTION MASS AXIS SYSTEM (S)	MASS	X-C.G.	Y-C.G.	Z-C.G.
X	1.748178E-02	0.000000E+00	2.747070E+01	-6.158906E+01
Y	1.748178E-02	9.882302E-01	0.000000E+00	-6.158906E+01
Z	1.748178E-02	9.882302E-01	2.747070E+01	0.000000E+00

Material and Temperature

The EVA Connector Panel is made of 6061-T651 Aluminum Alloy. Material properties of 6061-T651 are taken from MMPDS-01. The temperature extremes for the EVA Connector Panel are -40 ^{o}F to 175 ^{o}F.

Analysis

The critical stresses for the EVA Connector Panel are compared to the ultimate and yield strength of 6061-T651 Aluminum Alloy. The EVA Connector Panel was analyzed for liftoff/landing loads and 125 lb kickloads. Analysis for the fasteners used to assemble the EVA Connector Panel and attach to the Lower USS-02 was also performed. All margins of safety are positive.

CHECK OF EVA CONNECTOR PANEL

Material Properties : 6061-T651 AL ALY *(Ref. MMPDS-01, Table 3.6.2.0(b_2))*

$F_{tu} := 40000 \cdot psi$

$F_{ty} := 35000 \cdot psi$

$F_{su} := 27000 \cdot psi$

Factors of Safety, $FS_u := 2.0$ $FS_y := 1.25$

Temperature reduction factors,

+ At 175°F: (For EVA Connector Panel, the temperature extremes are -40°F to 175°F; These temperature reduction factors are conservative for liftoff/landing conditions)

- Ultimate: $\beta_{u1} := 0.93$ *(Ref. MMPDS-01, Figure 3.6.2.2.1(a))*

- Yield: $\beta_{y1} := 0.94$ *(Ref. MMPDS-01, Figure 3.6.2.2.1(b))*

Allowable stresses:

$F_{tu1.a} := \beta_{u1} \cdot F_{tu}$

$F_{tu1.a} = 37200 \cdot psi$

$F_{ty1.a} := \beta_{y1} \cdot F_{ty}$

$F_{ty1.a} = 32900 \cdot psi$

$F_{su1.a} := \beta_{u1} \cdot F_{su}$

$F_{su1.a} = 25110 \cdot psi$

NASPOST V.2.2 is used to sort out the maximum stresses within the load cases. Note that the following elements located at the bolt holes were omitted from the NASPOST sort (see table below). These elements resulted with localized stresses and therefore the stresses were not real.

Omitted Elements From NASPOST Sort for Liftoff and Landing Loads Analysis			Omitted Elements From NASPOST Sort for Kickload Analysis
25522	26699	26722	25522
26558	25519	25521	25523
25525	26943	26553	25524
25523	26939	26486	25525
25524	25508	26657	26558
26648	26720	26549	26648
26717	26950	26719	
26888	26721	26655	
26560	25507	25777	
25518	26569	26555	
26948	26945	26550	
1688	26572	25807	
26559	1687	26949	
26715	26565	26897	
26567	26552		
26556	26568		

The following figures show the location of the omitted elements.

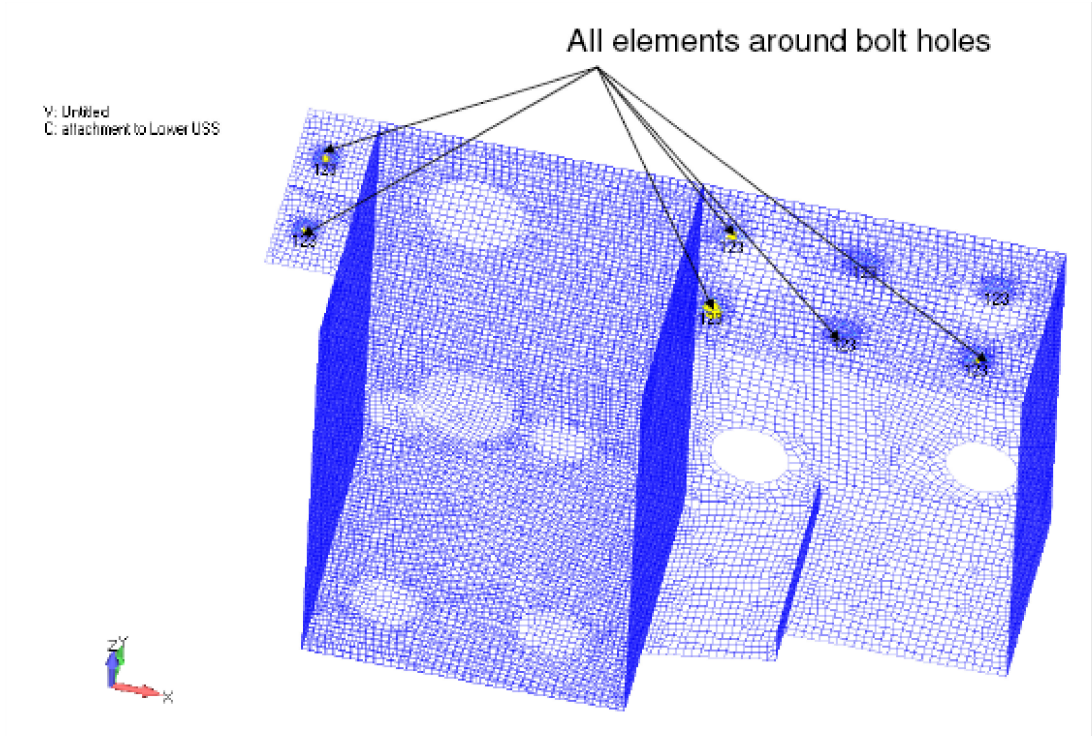

Applying Simplified Design Loads from AMS-02 SVP (Table 4-4) for Liftoff and Landing Loads

Maximum Von-Mises, principal, and shear stresses of plate elements are selected from 24 load cases. The launch/landing design limit load factors for small secondary structures were used in this analysis. Using Table 4-4 from document JSC 28792, a load factor of 40g was obtained (since the mass of the EVA connector panel is less than 20 lb). This load factor was applied in all three axis, with a load factor of 25% of the primary load applied to the remaining two orthogonal axes, simultanously. NASPOST V.2.2 is used to sort out the maximum stresses within the load cases.

Load Case	X-axis Load Factor	Y-axis Load Factor	Z-axis Load Factor
1001	40	10	10
1002	40	-10	10
1003	40	-10	-10
1004	40	10	-10
1005	-40	10	10
1006	-40	-10	10
1007	-40	10	-10
1008	-40	-10	-10
1009	10	40	10
1010	10	-40	10
1011	10	-40	-10
1012	10	40	-10
1013	-10	40	10
1014	-10	-40	10
1015	-10	40	-10
1016	-10	-40	-10
1017	10	10	40
1018	10	-10	40
1019	10	-10	-40
1020	10	10	-40
1021	-10	10	40
1022	-10	-10	40
1023	-10	10	-40
1024	-10	-10	-40

The principal stresses for elements listed above were omitted.

ID	SUBCASE	MAX-PRIN-TOP	MIN-PRIN-TOP	MAX-PRIN-BOT	MIN-PRIN-BOT	MAXABS-PRIN
25522	1010	22011.64	0.00	0.00	-21822.92	22011.64
26558	1015	0.00	-18375.72	18911.07	0.00	18911.07
25525	1010	18878.48	0.00	0.00	-17866.87	18878.48
25523	1010	17514.45	0.00	0.00	-17493.16	17514.45
25524	1015	0.00	-17240.73	16976.46	0.00	17240.73
26648	1013	0.00	-16910.42	15838.34	0.00	16910.42
26717	1013	0.00	-16533.88	14522.54	0.00	16533.88
26888	1010	16533.48	0.00	0.00	-11553.94	16533.48
26560	1015	0.00	-15781.96	15911.11	0.00	15911.11
25518	1016	15857.93	0.00	0.00	-13894.13	15857.93
26948	1014	0.00	-14963.19	15384.92	0.00	15384.92
1688	1010	0.00	-15111.59	14969.78	0.00	15111.59
26559	1015	0.00	-14440.39	14892.47	0.00	14892.47
26715	1013	0.00	-14366.31	14637.81	0.00	14637.81
26567	1010	0.00	-14569.11	14299.38	0.00	14569.11
26556	1010	14551.40	0.00	0.00	-14150.42	14551.40
26699	1013	0.00	-12733.05	14302.74	0.00	14302.74
25519	1016	14178.91	0.00	0.00	-13410.31	14178.91
26943	1010	0.00	-13250.12	9838.22	0.00	13250.12
26939	1012	0.00	-13044.62	13226.52	0.00	13226.52
25508	1015	13102.65	0.00	0.00	-13041.49	13102.65
26720	1013	0.00	-12007.11	13040.76	0.00	13040.76
26950	1012	13026.98	0.00	0.00	-12764.96	13026.98
26721	1011	12847.36	0.00	0.00	-12978.81	12978.81
25507	1015	0.00	-12919.24	12199.52	0.00	12919.24
26569	1015	12826.51	0.00	0.00	-12678.01	12826.51
26945	1014	12745.88	0.00	0.00	-10811.14	12745.88
26572	1015	12620.03	0.00	0.00	-12511.86	12620.03
1687	1015	12572.85	0.00	0.00	-12441.52	12572.85
26565	1015	12550.82	0.00	0.00	-12471.61	12550.82
26552	1015	0.00	-12449.86	12217.50	0.00	12449.86
26568	1010	0.00	-12425.12	12279.54	0.00	12425.12
26722	1013	0.00	-12109.93	12417.40	0.00	12417.40
25521	1009	12385.13	0.00	0.00	-11948.72	12385.13
26553	1015	0.00	-12315.06	12009.09	0.00	12315.06
26486	1009	0.00	-12236.66	11317.10	0.00	12236.66
26657	1011	12233.23	0.00	0.00	-12095.09	12233.23
26549	1010	12178.44	0.00	0.00	-12228.12	12228.12
26719	1011	12209.13	0.00	0.00	-10682.49	12209.13
26655	1011	12167.58	0.00	0.00	-11442.31	12167.58
25777	1010	12153.96	0.00	0.00	-11869.91	12153.96
26555	1010	12118.60	0.00	0.00	-12133.20	12133.20
26550	1015	0.00	-12083.95	12106.26	0.00	12106.26
25807	1015	12049.84	0.00	0.00	-11600.05	12049.84
26949	1012	11946.70	0.00	0.00	-11610.12	11946.70
26897	1014	0.00	-11800.97	11065.39	0.00	11800.97
26574	**1015**	**11793.09**	**0.00**	**0.00**	**-11650.23**	**11793.09**
25509	1010	11405.85	0.00	0.00	-11680.25	11680.25
26946	1014	11500.70	0.00	0.00	-11536.01	11536.01
25520	1009	11458.46	0.00	0.00	-10868.73	11458.46

$u_{uu.max} := 11793 \cdot psi$ *LC# 1015, ELEM# 26574* *(Maximum Principal Stress)*

(See Appendix A26, p.A26-9)

The Von-Mises stresses for elements 25522, 26558, 25525, 25523, 25524, 26888, 26717, 25518 and 26648 were omitted.

ID	SUBCASE	VON-MISES-TOP	VON-MISES-BOT	MAXABS-VON-MI
25522	1015	20862.38	19505.33	20862.38
25525	1015	17139.05	16925.28	17139.05
26558	1015	16531.12	16561.83	16561.83
25523	1010	15691.15	16141.57	16141.57
26648	1011	15864.71	13754.33	15864.71
25524	1015	14977.24	15300.67	15300.67
26717	1013	14398.21	13613.54	14398.21
26888	1010	14335.33	11126.75	14335.33
25518	1013	14327.32	13044.85	14327.32
26948	**1014**	**12977.27**	**14202.15**	**14202.15**

$u_{uy.max} := 14202.15 \cdot psi$ *LC# 1014, ELEM# 26948* *(Maximum Von-Mises Stress)*

(See Appendix A26, p.A26-9)

The shear stresses for elements 25522, 26558, 25525, 25523, 25524, 26888, 26717, and 26648 were omitted.

ID	SUBCASE	MAX-SHEAR-TOP	MAX-SHEAR-BOT	MAXABS-SHR
25522	1010	11005.82	10911.46	11005.82
26558	1015	9187.86	9455.54	9455.54
25525	1015	9439.24	8933.44	9439.24
25523	1010	8757.23	8746.58	8757.23
25524	1015	8620.36	8488.23	8620.36
26648	1013	8455.21	7919.17	8455.21
26717	1013	8266.94	7261.27	8266.94
26888	1015	8266.74	5776.97	8266.74
26560	**1015**	**7890.98**	**7955.55**	**7955.55**

$u_{us.max} := 7955.55 \cdot psi$ *LC# 1015; ELEM# 26560* *(Maximum Shear Stress)*

(see Appendix A26, p.A26-10)

Margins of Safety,

$$MS_{u1} := \frac{F_{tu1.a}}{FS_u \cdot u_{uu.max}} - 1 \qquad MS_{u1} = 0.577$$

$$MS_{y1} := \frac{F_{ty1.a}}{FS_y \cdot u_{uy.max}} - 1 \qquad MS_{y1} = 0.85$$

$$MS_{s1} := \frac{F_{su1.a}}{FS_u \cdot u_{us.max}} - 1 \qquad MS_{s1} = 0.58$$

Applying 125 lb Kickload

Maximum Von-Mises, principal, and shear stresses of plate elements are selected from the 125 lb kickload cases. The kickload was applied at different locations of the EVA Connector Panel. NASPOST V.2.2 is used to sort out the maximum stresses within the load cases.

Load Case	Node Where Load is Applied	Fx	Fy	Fz
4001	14372	25	0	0
	13092	25	0	0
	11235	25	0	0
	12728	25	0	0
	11525	25	0	0
4002	5949	0	-25	0
	5953	0	-25	0
	5948	0	-25	0
	4436	0	-25	0
	4434	0	-25	0
4003	29864	0	-25	0
	29845	0	-25	0
	29834	0	-25	0
	29721	0	-25	0
	29723	0	-25	0
4004	5009	0	-25	0
	5029	0	-25	0
	4989	0	-25	0
	5032	0	-25	0
	5011	0	-25	0

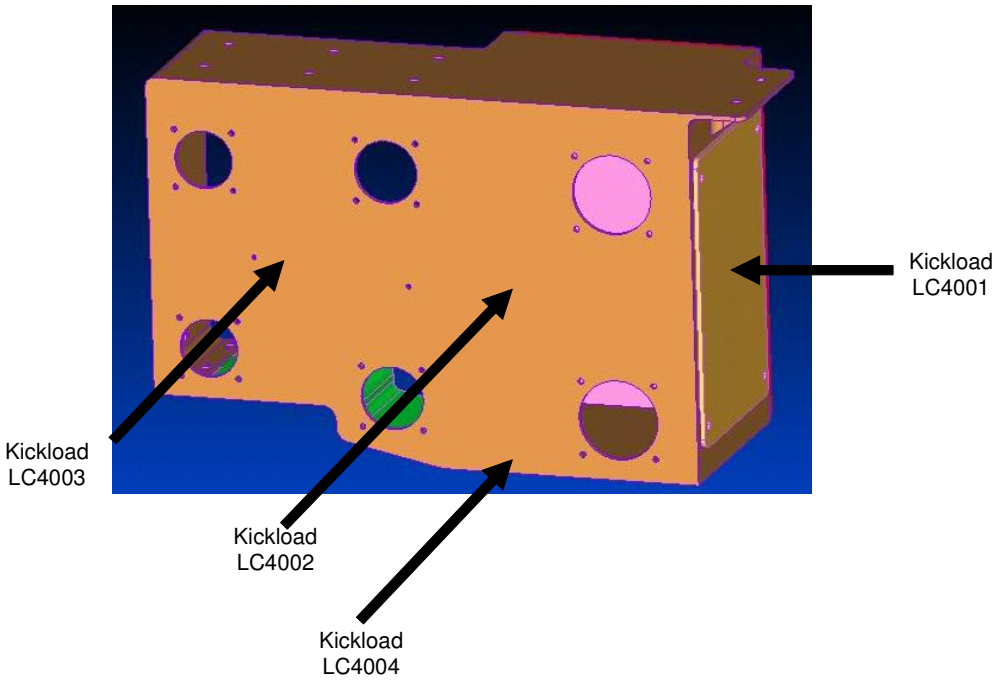

The principal, Von-Mises, and shear stresses for elements 25522, 26558, 25525, 25523, 25524, and 26648 were omitted.

ID	SUBCASE	MAX-PRIN-TOP	MIN-PRIN-TOP	MAX-PRIN-BOT	MIN-PRIN-BOT	MAXABS-PRIN
25522	4004	22106.09	0.00	0.00	-22038.88	22106.09
26558	4004	18598.62	0.00	0.00	-18880.55	18880.55
25525	4004	18713.09	0.00	0.00	-18239.95	18713.09
25523	4004	17522.02	0.00	0.00	-17543.34	17543.34
25524	4004	17272.69	0.00	0.00	-17174.94	17272.69
26648	4004	16209.34	0.00	0.00	-15686.72	16209.34
26560	**4004**	**15919.01**	**0.00**	**0.00**	**-16004.91**	**16004.91**

$u_{uu1.max} := 16004.91 \cdot psi$ *LC# 4004, ELEM# 26560* *(Maximum Principal Stress)*

(See Appendix A26, p.A26-22)

ID	SUBCASE	VON-MISES-TOP	VON-MISES-BOT	MAXABS-VON-MI
25522	4004	20553.82	19930.83	20553.82
25525	4004	17132.30	17053.54	17132.30
26558	4004	16580.21	16621.19	16621.19
25523	4004	15830.34	16073.88	16073.88
25524	4004	15079.05	15253.37	15253.37
26648	4004	14835.59	13592.30	14835.59
11691	**4001**	**14719.56**	**14694.82**	**14719.56**

$u_{uy1.max} := 14719.56 \cdot psi$ *LC# 4001, ELEM# 11691* *(Maximum Von-Mises Stress)*

(See Appendix A26, p.A26-23)

ID	SUBCASE	MAX-SHEAR-TOP	MAX-SHEAR-BOT	MAXABS-SHR
25522	4004	11053.04	11019.44	11053.04
26558	4004	9299.31	9440.28	9440.28
25525	4004	9356.55	9119.97	9356.55
25523	4004	8761.01	8771.67	8771.67
25524	4004	8636.34	8587.47	8636.34
26648	4004	8104.67	7843.36	8104.67
26560	**4004**	**7959.50**	**8002.46**	**8002.46**

$u_{us1.max} := 8002.46 \cdot psi$ *LC# 4004; ELEM# 26560* *(Maximum Shear Stress)*

(see Appendix A26, p.A26-24)

Margins of Safety,

$$MS_{u1} := \frac{F_{tu1.a}}{FS_u \cdot u_{uu1.max}} - 1 \qquad MS_{u1} = 0.162$$

$$MS_{y1} := \frac{F_{ty1.a}}{FS_y \cdot u_{uy1.max}} - 1 \qquad MS_{y1} = 0.79$$

$$MS_{s1} := \frac{F_{su1.a}}{FS_u \cdot u_{us1.max}} - 1 \qquad MS_{s1} = 0.57$$

Bolt Analysis

CHECK BOLTS (NAS8103U9 0.19"-32 x 0.56 L Material-A-286), Nut Plate: MS21076L3N, Washer NAS1149E0332R

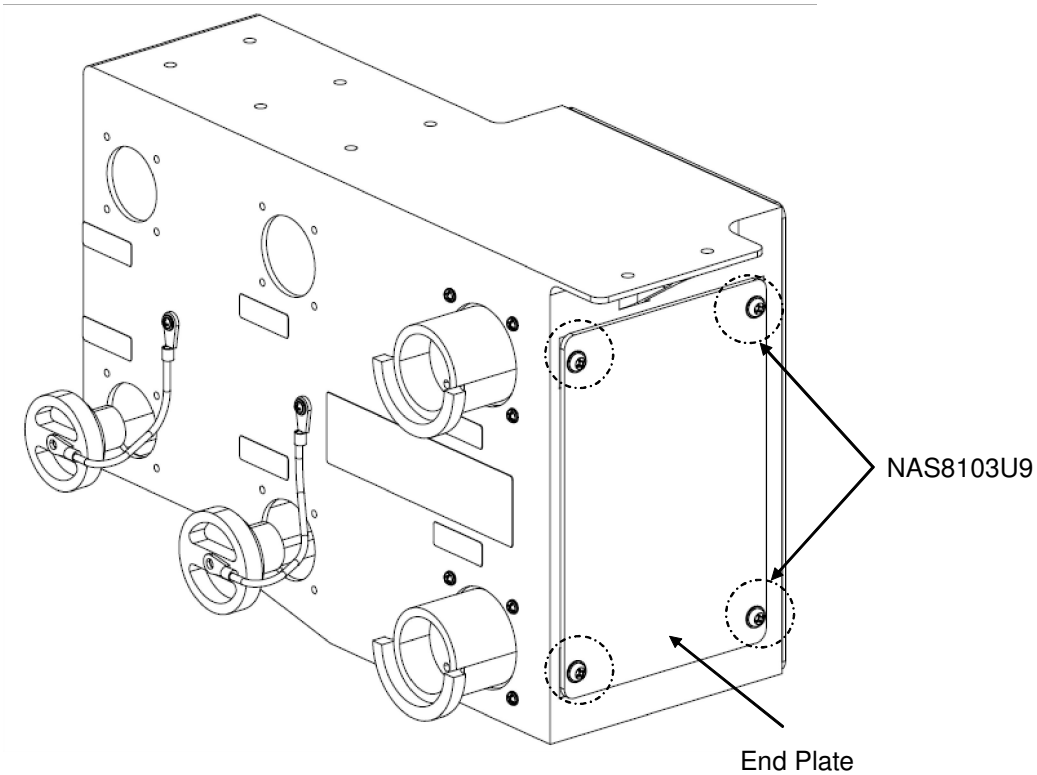

There is a total of 4 fasteners attaching the end plate to the Connector Panel Assembly and the loads are shared equally between the 4 fasteners.

Area of plate $A := 39.701 \cdot in^2$ Thickness of plate $t := 0.125 \cdot in$

Volume of plate $v := A \cdot t$ $v = 4.963\,in^3$ Density of material 6061 $\beta := 0.098 \cdot \frac{lbf}{in^3}$

Weight of plate $w := v \cdot \beta$ $w = 0.486\,lbf$

Using 40 g in the axial direction and 10 g in the transverse directions

Total tension load $Ptot := 40 \cdot w$ $Ptot = 19.453\,lbf$

Toal shear load in the transverse directions $S1 := 10 \cdot w$ $S1 = 4.863\,lbf$ $S2 := S1$

Resultant shear load $Stot := \sqrt{S1^2 + S2^2}$ $Stot = 6.878\,lbf$

Tension load per bolt $P := \frac{Ptot}{4}$ $P = 4.9\,lbf$ Shear load per bolt $V := \frac{Stot}{4}$ $V = 1.7\,lbf$

Prepared By	Name	Date	Engineering and Science Contract Group	File Name
	G. Reyes	02/25/08		eva-con-panel1.mcd
Checked By	C. Bala		*Structural Analysis Section*	Draw ing No. SEG39136085
Title	**AMS-02 EVA Connector Panel**			

CHECK BOLTS (NAS8103U9 0.19"-32 x 0.56 L Material-A-286), Nut Plate: MS21076L3N, Washer NAS1149E0332R

Flange_1 := "End Plate"
Part number: SDG39136088
Material: Al Aly 6061-T651

Flange_2 := "Connector Panel Assy"
Part number: SDG39136086
Material: Al Aly 6061-T651

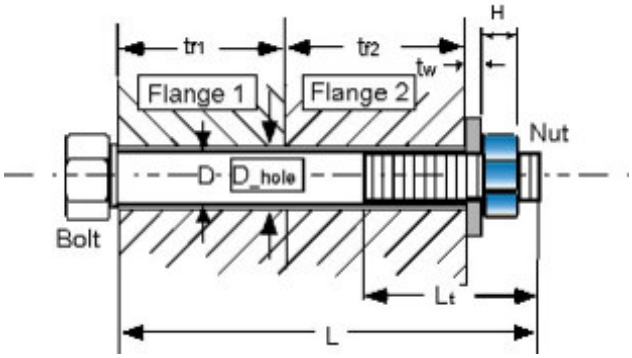

Minimum edge distance of flange one: $edge1 := .287 \cdot in$

flange two: $edge2 := .547 \cdot in$

Note: Figure is for reference only.
Not to scale, and actual joint made differ
Washer may be on nut side, head side, or both

Loads

Applied tensile load $P := 4.9 lbf$

Applied shear load $V := 1.7 lbf$

Applied bending moment $M := 0.0 in \cdot lbf$

Factors of Safety

Ultimate $SFu := 2.0$ Yield $SFy := 1.25$ Joint Separation $SFsep := 1.2$

Fitting factor $FF := 1.15$

Temperature data

Assembly $Temp_initial := 70 \cdot deg$

Maximum $Temp_max := 175 \cdot deg$

Minimum $Temp_min := -40 \cdot deg$

Note, these are maximum temperatures that hardware sees / if maximum load occurs at a different temperature this will be conservative

Bolt Data

Nominal diameter of bolt $D := .190 \cdot in$

Number of threads/inch $Nt := 32 \cdot \frac{1}{in}$

Shank diameter of bolt $D_shank := .190 \cdot in$

Note, if there is a retainer groove in the fastener, this should be the calculated diameter to give an equivalent cross sectional area

Total length of bolt $L := 0.56 \cdot in$

Threaded length $Lt := 0.56 \cdot in$ (If bolt is fully threaded, input Lt = L)

Bolt head dia. across flats $dw := 0.357 \cdot in$ (dia of pressure boss if it exists, otherwise dia of head)

Bolt head height $bh := .122 \cdot in$ (head height is 0 if bolt is flat head)

Thread data lookup table is hidden

Fri Apr 27 14:15:35 2007

This file uses the data shown in \\escfil02\2i11_mathcad\8307_bolts\Rev_D\thread_data.mcd

Temperature correction factor for bolt strength ultimate. $TSu_bolt := 0.97$ Yield $TSy_bolt := 0.97$

Bolt ultimate tensile allowable stress ultimate: $Ftu_bolt := 160000 \cdot psi$ Yield $Fty_bolt := 120000 \cdot psi$

Bolt ultimate shear allowable stress $Fsu_bolt := 0.6 \cdot Ftu_bolt$

Temperature correction factor for bolt modulus $TE_bolt := 0.98$

Modulus of elasticity of bolt $E_bolt := \left(29.1 \cdot 10^{6} \cdot psi\right)$

Thermal coefficients for bolt $u_bolt_hot := 9.15 \cdot 10^{-6} \cdot \frac{\frac{in}{in}}{deg}$ $u_bolt_cold := 8.7 \cdot 10^{-6} \cdot \frac{\frac{in}{in}}{deg}$

Washer Data

Thickness of washers: head $twh := 0.032 \cdot in$

nut $twn := 0.0 \cdot in$

these are total washer thickness, if there are more than one

Diameter of washer under head, Outer: $Dwoh := 0.438in$ Inner: $Dwih := 0.203 \cdot in$

Diameter of washer under nut, Outer: $Dwon := 0.0in$ Inner: $Dwin := 0.0 \cdot in$

Note: If there are no washer tw's, Dw's and Dwi's should be zero

Modulus of elasticity, head: $E_washerh := \left(29.1 \cdot 10^{6} \cdot psi\right)$

nut: $E_washern := \left(29.1 \cdot 10^{6} \cdot psi\right)$

Temperature correction factor for modulus, head: $TE_washerh := 0.98$

nut: $TE_washern := 0.0$

Nut Data

Height of nut $H := 0.25 \cdot in$ Nut dia. across flats $Dn := 0.29 \cdot in$

Temperature correction factor for nut strength $TS_nut := 0.97$

Ultimate allowable stress, tensile: $Ftu_nut := 125000 \cdot psi$ Shear: $Fsu_nut := 0.6 \cdot Ftu_nut$

Ultimate axial strength of nut $Ptu_nut := 2460 \cdot lbf$ (*Reference MS21076*)

Flange data

Stiffness of the joint depends upon number of members in the grip of the fasteners & their material properties,

Thickness of flange 1: $tf1 := .125 \cdot in$ flange 2: $tf2 := .125in$ Diameter of thru hole $D_hole := 0.240 \cdot in$

Modulus of elasticity of these members, with temperature correction factors

Compressive Modulus of elasticity for the parts in the joint $E_flange1 := \left(10.1 \cdot 10^{6} \cdot psi\right)$ $E_flange2 := \left(10.1 \cdot 10^{6} \cdot psi\right)$

Temperature correction factor (modulus) for flange 1: $Tf1E := 0.99$ flange 2: $Tf2E := 0.99$

Coefficient of thermal expansion for flanges $u_flange1_hot := 12.9 \cdot 10^{-6} \cdot \frac{\frac{in}{in}}{deg}$ $u_flange2_hot := 12.9 \cdot 10^{-6} \cdot \frac{\frac{in}{in}}{deg}$

$u_flange1_cold := 12.25 \cdot 10^{-6} \cdot \frac{\frac{in}{in}}{deg}$ $u_flange2_cold := 12.25 \cdot 10^{-6} \cdot \frac{\frac{in}{in}}{deg}$

Torque/Preload data

Maximum torque $Tmax := 41 \cdot in \cdot lbf$

Minimum torque $Tmin := 34in \cdot lbf$

(*Reference dwg. SEG39136085*)

Joint is lubed/dry

Preload Uncertainty $:= 0.25$

Torque coefficient $k := 0.15$

Loading plane factor $n := 0.5$

Stiffness and Margin calculations are hidden

Fri Apr 27 14:15:49 2007

This file uses the calculations shown in \\escfil02\2i11_mathcad\8307_bolts\Rev_D\bolt_stiffness_nut.mcd

Bolt Load data

Bolt/joint stiffness factor $= = 0.332$

Max. preload $PLDmax = 1879\,lbf$

Min. preload $PLDmin = 725\,lbf$

Nom. preload $PLDnom = 1439\,lbf$

Preload to yield ratio(nom.) $PLDratio = 0.642$

Joint separation load $Psep = 5.88\,lbf$

Preload due to temperature $Pthr_pos = 80.5\,lbf$

$Pthr_neg = -79.869\,lbf$

Uncertainty factor $= 0.25$

Torque coefficient $k = 0.15$

Loading plane factor $n = 0.5$

Bolt Load data (cont.)

Applied Tensile load on the bolt	$P = 4.9\,lbf$	Max. load on the bolt with preload and Factor of safety (ultimate)	$Pb = 1881\,lbf$
Applied shear on the bolt	$V = 1.7\,lbf$	(yield)	$Pby = 1880\,lbf$
Applied bending on the bolt	$M = 0\,in \cdot lbf$		
		Max. load on the bolt with preload without factor of safety	$Pbapp = 1880\,lbf$

Bolt ultimate tensile strength	$PAt = 2987\,lbf$	Bolt shear strength	$VAu = 1633\,lbf$
Thread pullout strength	$PAs = 2386\,lbf$	Bolt bending strength	$MAu = 62\,in \cdot lbf$
Nut ultimate tensile strength	$Ptu_nut = 2386\,lbf$		

General Checks

length_check = "Bolt length should be increased! nut is fully threaded, but does not extend past nut"

cone_check = "Joint pressure cone does not extend pass flange edge"

preload_check = "NOTE: Nominal preload < 65% of bolt yield strength"

washer_check = "Washers under head and nut do not extend past flanges"

Summary of Margins for bolt:

Joint separation	$MS_1 = 127.53$	Direct Thread shear Ultimate	$MS_6 = 210.73$
Direct Tension Ultimate	$MS_2 = 264.08$	Total Thread shear Ultimate	$MS_7 = 0.27$
Direct Tension Yield	$MS_3 = 317.09$	Shear Ultimate	$MS_8 = 416.53$
Total Tension Ultimate	$MS_4 = 0.59$	Bending Ultimate	$MS_9 = 100$
Total Tension Yield	$MS_5 = 0.19$	Combined shear, tension and bending ultimate	$MS_{10} = 0.59$

Smallest margin of safety for the bolt, and the failure mode:

MSbolt = 0.19 Failure_Mode = "Total Tension Yield"

Fail-safe Analysis

Fail-safe Loads

Applied tensile load $P_FS := 9.8 \cdot lbf$

Applied shear load $V_FS := 3.4 \cdot lbf$

Applied bending moment $M_FS := 0.0 \cdot in \cdot lbf$

Fail-safe Factors of Safety

Ultimate $SFu_FS := 1.0$

Joint Separation $SFsep_FS := 1.0$

Fail Safe Margin calculations are hidden / stiffness & allowable data is not recalculated

Fri Apr 27 14:16:05 2007

This file uses the calculations shown in \\escfil02\2i11_mathcad\8307_bolts\Rev_D\bolt_stiffness_nut_FS.mcd

Bolt Fail-safe Load data

Joint separation load $Psep_FS = 9.8\,lbf$

Max. load on the bolt(ultimate) $Pb_FS = 1880.6\,lbf$

Summary of fail-safe Margins for bolt:

Joint separation $MS_FS_1 = 76.12$

Direct Tension Ultimate $MS_FS_2 = 264.08$

Total Tension Ultimate $MS_FS_3 = 0.59$

Direct Thread shear Ultimate $MS_FS_4 = 210.73$

Total Thread shear Ultimate $MS_FS_5 = 0.27$

Shear Ultimate $MS_FS_6 = 416.53$

Bending Ultimate $MS_FS_7 = 10$

Combined shear, tension and bending ultimate $MS_FS_8 = 0.59$

Determination of the smallest fail-safe margin of safety for the bolt, and the failure mode:

$MSbolt_FS = 0.27$ $Failure_Mode_FS = \text{"Total Thread Shear Ultimate (Nut)"}$

CHECK BOLTS (NAS8103U9 0.19"-32 x 0.50 L Material-A-286), Insert MS51830CA201L, Washer NAS1149E0332R

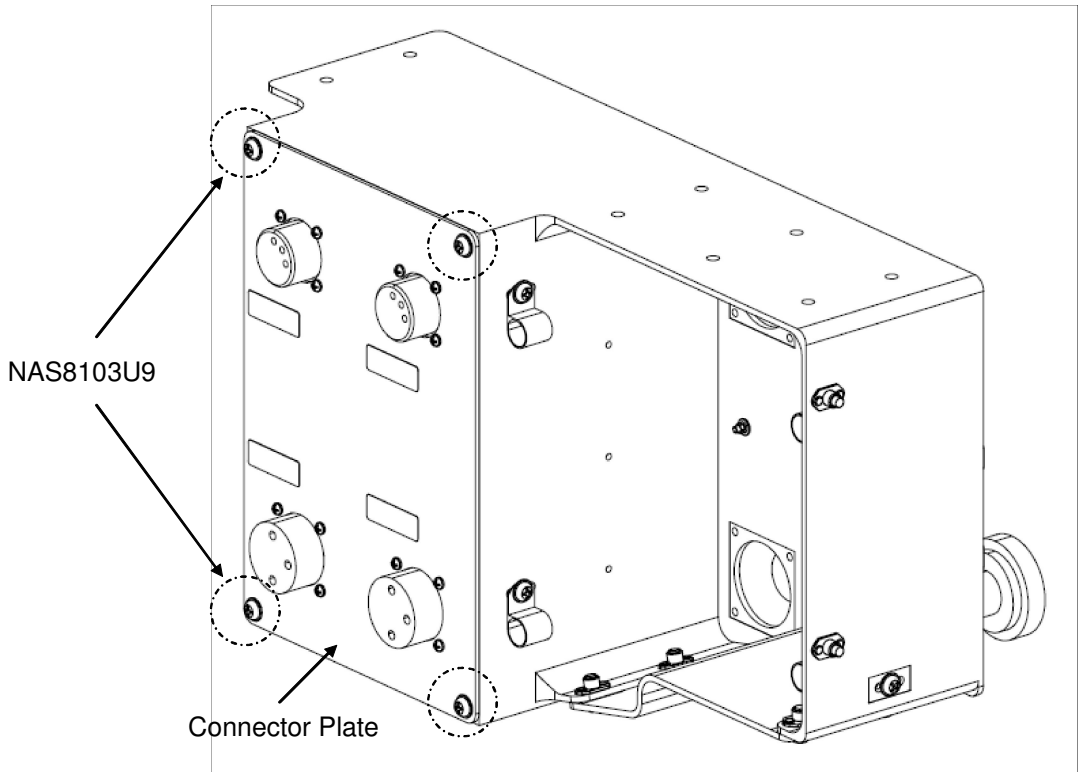

There is a total of 4 fasteners attaching the connector plate to the Connector Panel Assembly and the loads are shared equally by the 4 fasteners.

Area of plate $A := 61.79 \cdot in^2$ Thickness of plate $t := 0.087 \cdot in$

Volume of plate $v := A \cdot t$ $v = 5.376\,in^3$ Density of material 6061 $\beta := 0.098 \cdot \frac{lbf}{in^3}$

Weight of plate $w := v \cdot \beta$ $w = 0.527\,lbf$

Using 40 g in the axial direction and 10 g in the transverse direction

Total tension load $Ptot := 40 \cdot w$ $Ptot = 21.073\,lbf$

Toal shear load in the transverse directions $S1 := 10 \cdot w$ $S1 = 5.268\,lbf$ $S2 := S1$

Resultant shear load $Stot := \sqrt{(S1)^2 + (S2)^2}$ $Stot = 7.45\,lbf$

Tension load per bolt $P := \frac{Ptot}{4}$ $P = 5.3\,lbf$

Shear load per bolt $V := \frac{Stot}{4}$ $V = 1.9\,lbf$

CHECK BOLTS (NAS8103U9 0.19"-32 x 0.50 L Material-A-286), Insert MS51830CA201L, Washer NAS1149E0332R

Flange_1 := "Connector Plate"
Part number: SDG39136087
Material: Al Aly 6061-T651

Flange_2 := "Connector Panel Assy"
Part number: SDG39136086
Material: Al Aly 6061-T651

Minimum edge distance of flange one: $edge1 := .312 \cdot in$

flange two: $edge2 := .312 \cdot in$

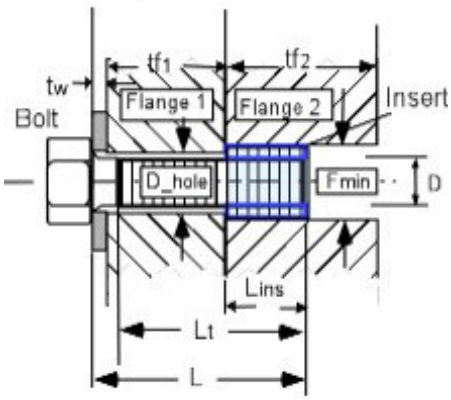

Note: Figure is for reference only.
Not to scale, and actual joint may differ
There may or may not be a washer(s)

Loads

Applied tensile load $P := 5.3lbf$

Applied shear load $V := 1.9lbf$

Applied bending moment $M := 0.0in \cdot lbf$

Factors of Safety

Ultimate $SFu := 2.0$ Yield $SFy := 1.25$ Joint Separation $SFsep := 1.2$

Fitting factor

$FF := 1.15$

Temperature data

Assembly $Temp_initial := 70 \cdot deg$

Maximum $Temp_max := 175 \cdot deg$

Minimum $Temp_min := -40deg$

Note, these are maximum temperatures that hardware sees / if maximum load occurs at a different temperature this will be conservative

Bolt Data

Nominal diameter of bolt $D := .190 \cdot in$

Number of threads/inch $Nt := 32 \cdot \frac{1}{in}$

Shank diameter of bolt $D_shank := .190 \cdot in$

Note, if there is a retainer groove in the fastener, this should be the calculated diameter to give an equivalent cross sectional area

Total length of bolt $L := 0.56 \cdot in$

Threaded length $Lt := 0.56 \cdot in$ (If bolt is fully threaded, input Lt = L)

Bolt head dia. across flats $dw := 0.357 \cdot in$ (dia of pressure boss if it exists, otherwise dia of head)

Bolt head height $bh := .122 \cdot in$ (head height is 0 if bolt is flat head)

Thread data lookup table is hidden

Fri Apr 27 14:11:39 2007

This file uses the data shown in \\escfil02\2i11_mathcad\8307_bolts\Rev_D\thread_data.mcd

Temperature correction factor for bolt strength ultimate. $TSu_bolt := 0.97$ Yield $TSy_bolt := 0.97$

Bolt ultimate tensile allowable stress ultimate: $Ftu_bolt := 160000 \cdot psi$ Yield $Fty_bolt := 120000 \cdot psi$

Bolt ultimate shear allowable stress $Fsu_bolt := 0.6 \cdot Ftu_bolt$

Temperature correction factor for bolt modulus $TE_bolt := 0.98$

Modulus of elasticity of bolt $E_bolt := \left(29.1 \cdot 10^{6} \cdot psi\right)$

Thermal coefficients for bolt $u_bolt_hot := 9.15 \cdot 10^{-6} \cdot \frac{\frac{in}{in}}{deg}$ $u_bolt_cold := 8.7 \cdot 10^{-6} \cdot \frac{\frac{in}{in}}{deg}$

Washer Data

Thickness of washers: $twh := 0.032 \cdot in$ this is total washer thickness, if there are more than one

Diameter of washer under head, Outer: $Dwoh := 0.438in$ Inner: $Dwih := 0.203 \cdot in$

Note: If there are no washer tw's, Dw's and Dwi's should be zero

Modulus of elasticity: $E_washerh := \left(29.1 \cdot 10^{6} \cdot psi\right)$ Temperature correction factor for modulus, $TE_washerh := 0.98$

Insert Data

Length of insert $Lins := 0.312 \cdot in$

Min. external diameter of insert $Fmin := 0.312 \cdot in$

Depth of recess for insert $lr := 0.01 \cdot in$

Temperature correction factor for insert strength $TS_ins := 0.98$

Ultimate tensile allowable stress $Ftu_ins := 140000 \cdot psi$

Ultimate shear allowable stress $Fsu_ins := 0.6 \cdot Ftu_ins$

Flange data

Stiffness of the joint depends upon number of members in the grip of the fasteners & their material properties,

Thickness of flange 1: $tf1 := .087 \cdot in$ flange 2: $tf2 := .312in$ (Length of insert) Diameter of thru hole $D_hole := .240 \cdot in$

Modulus of elasticity of these members, with temperature correction factors

Compressive Modulus of elasticity for the parts in the joint $E_flange1 := \left(10.1 \cdot 10^6 \cdot psi\right)$ $E_flange2 := \left(10.1 \cdot 10^6 \cdot psi\right)$

Temperature correction factor (modulus) for flange 1: $Tf1E := 0.99$ flange 2: $Tf2E := 0.99$

Coefficient of thermal expansion for flanges

$$u_flange1_hot := 12.9 \cdot 10^{-6} \cdot \frac{\frac{in}{in}}{deg} \qquad u_flange2_hot := 12.9 \cdot 10^{-6} \cdot \frac{\frac{in}{in}}{deg}$$

$$u_flange1_cold := 12.25 \cdot 10^{-6} \cdot \frac{\frac{in}{in}}{deg} \qquad u_flange2_cold := 12.25 \cdot 10^{-6} \cdot \frac{\frac{in}{in}}{deg}$$

Shear strength of flange two, with temperature reduction $Fsu_f2 := 27000 \cdot psi$ $Tf2s := 0.99$

Torque/Preload data

Maximum torque $Tmax := 41 \cdot in \cdot lbf$

Minimum torque $Tmin := 34in \cdot lbf$

(Reference dwg. SEG39136085)

Joint is lubed/dry

Preload Uncertainty $:= 0.25$

Torque coefficient $k := 0.15$

Loading plane factor $n := 0.5$

Stiffness and Margin calculations are hidden

Fri Apr 27 14:11:53 2007

This file uses calculations shown in \\escfil02\2i11_mathcad\8307_bolts\Rev_D\bolt_insert_stiffness.mcd

Bolt Load data

Bolt/joint stiffness factor $= = 0.358$

Max. preload $PLDmax = 1968\,lbf$

Min. preload $PLDmin = 637\,lbf$

Nom. preload $PLDnom = 1439\,lbf$

Preload to yield ratio(nom.) $PLDratio = 0.642$

Joint separation load $Psep = 6.36\,lbf$

Preload due to temperature $Pthr_pos = 169.5\,lbf$ $Pthr_neg = -168.1\,lbf$

Uncertainty factor $= 0.25$

Torque coefficient $k = 0.15$

Loading plane factor $n = 0.5$

Bolt Load data (cont.)

Applied Tensile load on the bolt $P = 5.3\,lbf$

Applied shear on the bolt $V = 1.9\,lbf$

Applied bending on the bolt $M = 0\,in \cdot lbf$

Max. load on the bolt with preload and Factor of safety

(ultimate) $Pb = 1970\,lbf$

(yield) $Pby = 1969\,lbf$

Max. load on the bolt with preload without factor of safety $Pbapp = 1969\,lbf$

Bolt ultimate tensile strength $PAt = 2987\,lbf$

Thread pullout strength $PAs = 4087\,lbf$

Bolt shear strength $VAu = 1633\,lbf$

Bolt bending strength $MAu = 62\,in \cdot lbf$

General Checks

length_check = "Bolt length is sufficient and insert fully engaged"

cone_check = "Joint pressure cone does not extend pass flange edge"

preload_check = "NOTE: Nominal preload < 65% of bolt yield strength"

washer_check = "Washer(s) under head do not extend past flange"

insert_check = "Flange two is thick enough for insert"

Summary of Margins for bolt:

Joint separation	$MS_1 = 105.05$	Direct Thread shear Ultimate	$MS_6 = 334.29$
Direct Tension Ultimate	$MS_2 = 244.07$	Total Thread shear Ultimate	$MS_7 = 1.07$
Direct Tension Yield	$MS_3 = 293.08$	Shear Ultimate	$MS_8 = 372.58$
Total Tension Ultimate	$MS_4 = 0.52$	Bending Ultimate	$MS_9 = 100$
Total Tension Yield	$MS_5 = 0.14$	Combined shear, tension and bending ultimate	$MS_{10} = 0.52$

Smallest margin of safety for the bolt, and the failure mode:

MSbolt = 0.14 Failure_Mode = "Total Tension Yield"

Fail-safe Analysis

Fail-safe Loads

Applied tensile load $P_FS := 10.6 \cdot lbf$

Applied shear load $V_FS := 3.8 \cdot lbf$

Applied bending moment $M_FS := 0.0 \cdot in \cdot lbf$

Fail-safe Factors of Safety

Ultimate $SFu_FS := 1.0$

Joint Separation $SFsep_FS := 1.0$

Fail Safe Margin calculations are hidden / stiffness & allowable data is not recalculated

Fri Apr 27 14:12:08 2007

This file calculations shown in \\escfil02\2i11_mathcad\8307_bolts\Rev_D\bolt_insert_stiffness__FS.mcd

Bolt Fail-safe Load data

Joint separation load $Psep_FS = 10.6\,lbf$

Max. load on the bolt(ultimate) $Pb_FS = 1970\,lbf$

Summary of fail-safe Margins for bolt:

Joint separation $MS_FS_1 = 62.63$

Direct Tension Ultimate $MS_FS_2 = 244.07$

Total Tension Ultimate $MS_FS_3 = 0.52$

Direct Thread shear Ultimate $MS_FS_4 = 334.29$

Total Thread shear Ultimate $MS_FS_5 = 1.07$

Shear Ultimate $MS_FS_6 = 372.58$

Bending Ultimate $MS_FS_7 = 10$

Combined shear, tension and bending ultimate $MS_FS_8 = 0.52$

Determination of the smallest fail-safe margin of safety for the bolt, and the failure mode:

$MSbolt_FS = 0.52$ Failure_Mode_FS = "Combined Shear Tension Bending Ultimate"

CHECK BOLTS (NAS1351N3-10 0.19"-32 x 0.625 L Material-A-286), Insert MS21209F1-10L, Washer NAS1149E0332R

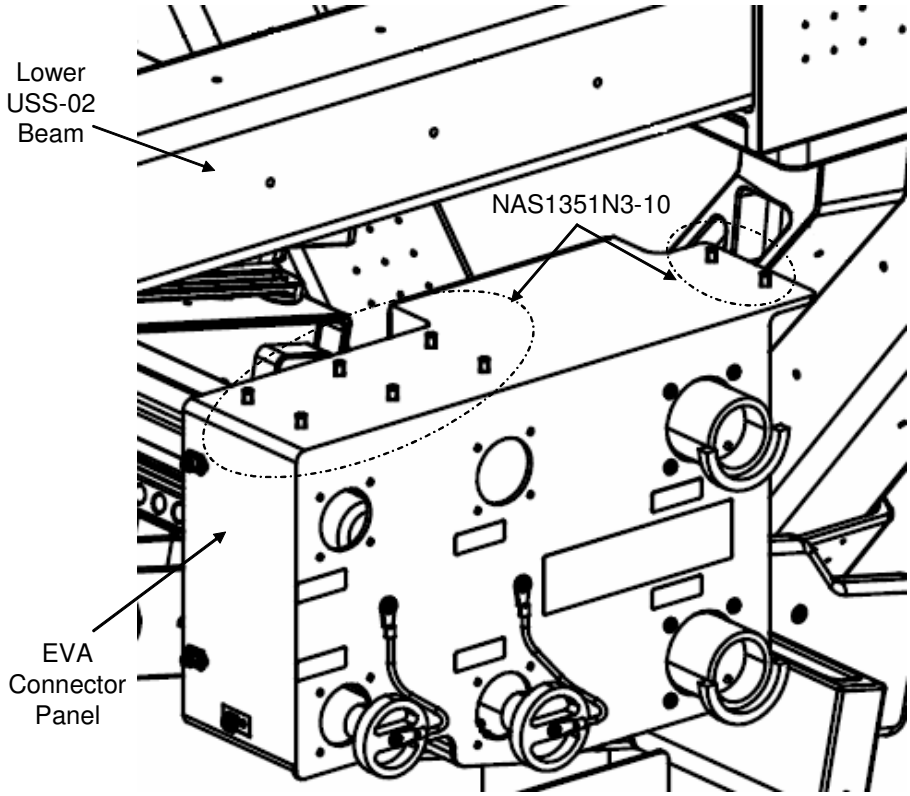

There is a total of 8 fasteners attaching the EVA Connector Panel to the Lower USS-02 beam.

Loads : Bolt forces were sorted by maximum absolute value on all three axes. The tensile load and shear load were calculated for the worse case. All bolt forces reference the Global Coordinate System.

Read in the external datum from NASPOST results:

$loads := READPRN("boltload3.txt")$

$i := 1..rows(loads)$ $\quad rows(loads) = 248$ $\quad j := 2..cols(loads)$ $\quad cols(loads) = 10$

$ID := loads^{\langle 1 \rangle}$ $\quad Fx := loads^{\langle 3 \rangle} \cdot lbf$ $\quad Fz := loads^{\langle 5 \rangle} \cdot lbf$ $\quad My := loads^{\langle 7 \rangle} \cdot in \cdot lbf$

$LC := loads^{\langle 2 \rangle}$ $\quad Fy := loads^{\langle 4 \rangle} \cdot lbf$ $\quad Mx := loads^{\langle 6 \rangle} \cdot in \cdot lbf$ $\quad Mz := loads^{\langle 8 \rangle} \cdot in \cdot lbf$

* Note that "boltload3.txt" is generated from NASPOST result (.LIS file) by just removing all words and comments.

$Ft_i := |Fz_i|$ $\quad max(Ft) = 323.43\,lbf$ $\quad$ Tensile Load

$Fv_i := \sqrt{(Fx_i)^2 + (Fy_i)^2}$ $\quad max(Fv) = 68.5\,lbf$ $\quad$ Shear Load

CHECK BOLTS (NAS1351N3-10 0.19"-32 x 0.625 L Material-A-286), Insert MS21209F1-10L, Washer NAS1149E0332R

Flange_1 := "CONNECTOR PANEL ASSEMBLY"
Part number: SDG39136086
Material: Al Aly 6061-T651

Flange_2 := "Tube Assy, EMC Box, USS-02 Lower Assy"
Part number: SDG39135761
Material: Al Aly 7075-T73511

Minimum edge distance of flange one: $edge1 := .625 \cdot in$

flange two: $edge2 := 1.0 \cdot in$

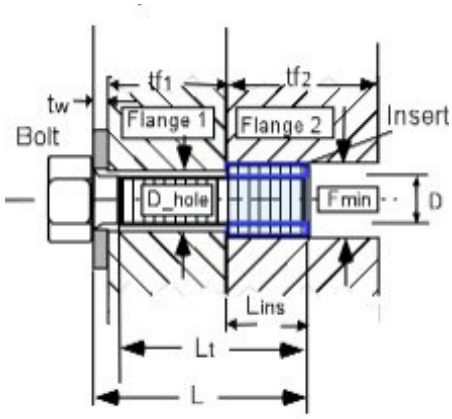

Note: Figure is for reference only.
Not to scale, and actual joint may differ
There may or may not be a washer(s)

Loads

Applied tensile load $P := 323.43lbf$

Applied shear load $V := 68.5lbf$

Applied bending moment $M := 0.0in \cdot lbf$

Factors of Safety

Ultimate $SFu := 2.0$ Yield $SFy := 1.25$ Joint Separation $SFsep := 1.2$

Fitting factor

$FF := 1.15$

Temperature data

Assembly $Temp_initial := 70 \cdot deg$

Maximum $Temp_max := 175 \cdot deg$

Minimum $Temp_min := -40deg$

note, these are maximum temperatures that hardware sees / if maximum load occurs at a different temperature this will be conservative

Bolt Data

Nominal diameter of bolt $D := .190 \cdot in$

Number of threads/inch $Nt := 32 \cdot \frac{1}{in}$

Shank diameter of bolt $D_shank := .184 \cdot in$

Note, if there is a retainer groove in the fastener, this should be the calculated diameter to give an equivalent cross sectional area

Total length of bolt $L := 0.625 \cdot in$

Threaded length $Lt := 0.625 \cdot in$ (If bolt is fully threaded, input Lt = L)

Bolt head dia. across flats $dw := 0.303 \cdot in$ (dia of pressure boss if it exists, otherwise dia of head)

Bolt head height $bh := .185 \cdot in$ (head height is 0 if bolt is flat head)

Thread data lookup table is hidden

Fri Apr 27 14:11:39 2007

This file uses the data shown in \\escfil02\2i11_mathcad\8307_bolts\Rev_D\thread_data.mcd

Temperature correction factor for bolt strength ultimate. $TSu_bolt := 0.97$ Yield $TSy_bolt := 0.97$

Bolt ultimate tensile allowable stress ultimate: $Ftu_bolt := 160000 \cdot psi$ Yield $Fty_bolt := 120000 \cdot psi$

Bolt ultimate shear allowable stress $Fsu_bolt := 0.6 \cdot Ftu_bolt$

Temperature correction factor for bolt modulus $TE_bolt := 0.98$

Modulus of elasticity of bolt $E_bolt := \left(29.1 \cdot 10^{6} \cdot psi\right)$

Thermal coefficients for bolt $\beta_bolt_hot := 8.7 \cdot 10^{-6} \cdot \frac{\frac{in}{in}}{deg}$ $\beta_bolt_cold := 9.15 \cdot 10^{-6} \cdot \frac{\frac{in}{in}}{deg}$

Washer Data

Thickness of washers: $twh := 0.032 \cdot in$ this is total washer thickness, if there are more than one

Diameter of washer under head, Outer: $Dwoh := 0.438in$ Inner: $Dwih := 0.203 \cdot in$

Note: If there are no washer tw's, Dw's and Dwi's should be zero

Modulus of elasticity: $E_washerh := \left(29.1 \cdot 10^{6} \cdot psi\right)$ Temperature correction factor for modulus, $TE_washerh := 0.98$

Insert Data

Length of insert $Lins := 0.190 \cdot in$

Min. external diameter of insert $Fmin := 0.236 \cdot in$

Depth of recess for insert $lr := 0.01 \cdot in$

Temperature correction factor for insert strength $TS_ins := 0.97$

Ultimate tensile allowable stress $Ftu_ins := 150000 \cdot psi$

Ultimate shear allowable stress $Fsu_ins := 0.6 \cdot Ftu_ins$

Flange data

Stiffness of the joint depends upon number of members in the grip of the fasteners & their material properties,

Thickness of flange 1: $tf1 := .1875 \cdot in$ flange 2: $tf2 := .25in$ Diameter of thru hole $D_hole := .236 \cdot in$

Modulus of elasticity of these members, with temperature correction factors

Compressive Modulus of elasticity for the parts in the joint $E_flange1 := \left(10.1 \cdot 10^6 \cdot psi\right)$ $E_flange2 := \left(10.7 \cdot 10^6 \cdot psi\right)$

Temperature correction factor (modulus) for flange 1: $Tf1E := 0.99$ flange 2: $Tf2E := 0.98$

Coefficient of thermal expansion for flanges

$\beta_flange1_hot := 12.9 \cdot 10^{-6} \cdot \frac{\frac{in}{in}}{deg}$ $\beta_flange2_hot := 12.65 \cdot 10^{-6} \cdot \frac{\frac{in}{in}}{deg}$

$\beta_flange1_cold := 12.25 \cdot 10^{-6} \cdot \frac{\frac{in}{in}}{deg}$ $\beta_flange2_cold := 12.1 \cdot 10^{-6} \cdot \frac{\frac{in}{in}}{deg}$

Shear strength of flange two, with temperature reduction $Fsu_f2 := 37000 \cdot psi$ $Tf2s := 0.98$

Torque/Preload data

Maximum torque $Tmax := 41 \cdot in \cdot lbf$

Minimum torque $Tmin := 34in \cdot lbf$

(*Reference dwg.SGG39135872*)

Joint is lubed/dry

Preload Uncertainty $u := 0.25$

Torque coefficient $k := 0.15$

Loading plane factor $n := 0.5$

Stiffness and Margin calculations are hidden

Fri Apr 27 14:11:53 2007

This file uses calculations shown in \\escfil02\2i11_mathcad\8307_bolts\Rev_D\bolt_insert_stiffness.mcd

Bolt Load data

Bolt/joint stiffness factor $= 0.845$

Max. preload $PLDmax = 1839\,lbf$

Min. preload $PLDmin = 773\,lbf$

Nom. preload $PLDnom = 1439\,lbf$

Preload to yield ratio(nom.) $PLDratio = 0.642$

Joint separation load $Psep = 388.116\,lbf$

Preload due to temperature $Pthr_pos = 40.5\,lbf$ $Pthr_neg = -31.5\,lbf$

Uncertainty factor $u = 0.25$

Torque coefficient $k = 0.15$

Loading plane factor $n = 0.5$

Bolt Load data (cont.)

Applied Tensile load on the bolt $P = 323.43\,lbf$

Applied shear on the bolt $V = 68.5\,lbf$

Applied bending on the bolt $M = 0\,in \cdot lbf$

Max. load on the bolt with preload and Factor of safety

(ultimate) $Pb = 2153\,lbf$

(yield) $Pby = 2035\,lbf$

Max. load on the bolt with preload without factor of safety $Pbapp = 1996\,lbf$

Bolt ultimate tensile strength $PAt = 2987\,lbf$

Thread pullout strength $PAs = 2554\,lbf$

Bolt shear strength $VAu = 1633\,lbf$

Bolt bending strength $MAu = 62\,in \cdot lbf$

General Checks

length_check = "Bolt length is sufficient and insert fully engaged"

cone_check = "Joint pressure cone does not extend pass flange edge"

preload_check = "NOTE: Nominal preload < 65% of bolt yield strength"

washer_check = "Washer(s) under head do not extend past flange"

insert_check = "Flange two is thick enough for insert"

Summary of Margins for bolt:

Joint separation	$MS_1 = 2$	Direct Thread shear Ultimate	$MS_6 = 2.43$
Direct Tension Ultimate	$MS_2 = 3.02$	Total Thread shear Ultimate	$MS_7 = 0.19$
Direct Tension Yield	$MS_3 = 3.82$	Shear Ultimate	$MS_8 = 9.36$
Total Tension Ultimate	$MS_4 = 0.39$	Bending Ultimate	$MS_9 = 100$
Total Tension Yield	$MS_5 = 0.1$	Combined shear, tension and bending ultimate	$MS_{10} = 0.39$

Smallest margin of safety for the bolt, and the failure mode:

MSbolt = 0.1 Failure_Mode = "Total Tension Yield"

Fail-safe Analysis (Conservatively, the loads were doubled to perform fail-safe analysis)

Fail-safe Analysis

Fail-safe Loads

Applied tensile load $P_FS := 646.86 \cdot lbf$

Applied shear load $V_FS := 137.0 \cdot lbf$

Applied bending moment $M_FS := 0.0 \cdot in \cdot lbf$

Fail-safe Factors of Safety

Ultimate $SFu_FS := 1.0$

Joint Separation $SFsep_FS := 1.0$

Fail Safe Margin calculations are hidden / stiffness & allowable data is not recalculated

Fri Apr 27 14:12:08 2007

This file calculations shown in \\escfil02\2i11_mathcad\8307_bolts\Rev_D\bolt_insert_stiffness__FS.mcd

Bolt Fail-safe Load data

Joint separation load $Psep_FS = 646.86\,lbf$

Max. load on the bolt(ultimate) $Pb_FS = 2153\,lbf$

Summary of fail-safe Margins for bolt:

Joint separation $MS_FS_1 = 0.8$

Direct Tension Ultimate $MS_FS_2 = 3.02$

Total Tension Ultimate $MS_FS_3 = 0.39$

Direct Thread shear Ultimate $MS_FS_4 = 2.43$

Total Thread shear Ultimate $MS_FS_5 = 0.19$

Shear Ultimate $MS_FS_6 = 9.36$

Bending Ultimate $MS_FS_7 = 10$

Combined shear, tension and bending ultimate $MS_FS_8 = 0.39$

Determination of the smallest fail-safe margin of safety for the bolt, and the failure mode:

$MSbolt_FS = 0.19$ $Failure_Mode_FS = \text{"Total Thread Shear Ultimate (Flange)"}$

5.10 Debris Shield Analysis

Section 5.10 Debris Shield Analysis

The Debris Shield Analysis is performed in the following report sections.

5.10.1	Port Debris Shield Assembly (SEG39137851)
5.10.1.1	Port Debris Shield Assembly Bolt Analysis
5.10.2	Starboard Debris Shield Assembly (SEG39137852)
5.10.2.1	Starboard Debris Shield Assembly Bolt Analysis
5.10.3	TRD Gas Ballistic Cover Assembly (SEG39137915)
5.10.3	TRD Gas Ballistic Cover Assembly Bolt Analysis

5.10.1 Port Debris Shield Assembly

5.10.1.1 General

Minimum Margins of Safety

Table 5.10.1.1 Parts Minimum Margins of Safety

Dwg/Part Number	Description	Material	Critical Load Condition	Failure Mode	Margin of Safety	Reference Page
SDG39137847-001	Debris Shield Interface Joint Bracket	AL ALY 7075-T7351	Lift Off	Tensile Ultimate	0.008	5.10.1-35
SDG39137848-002 SDG39137848-003	Debris Shield Mounting Brackets	AL ALY 6061-T651	Lift Off	Tensile Ultimate	0.29	5.10.1-31
SDG39137849-001 SDG39137849-002 SDG39137849-003 SDG39137849-004	Debris Shield Corner Bracket	AL ALY 6061-T651	Lift Off	Tensile Ultimate	0.75	5.10.1-27
SDG39137853-001	Port External Bumper Assy	AL ALY 7075-T73	Landing	Tensile Ultimate	0.07	5.10.1-20
SDG39137858-001	Debris Shield Inner Plate	AL ALY 7075-T73	Lift Off	Tensile Ultimate	0.81	5.10.1-23

Table 5.10.1.2 Fastener Minimum Margins of Safety

Dwg/Part Number	Description	Fastener	Material	$MS_{nominal}$	Failure Mode	Reference Page
SDG39137847-001 SDG39135737	Interface Joint to Lower Vacuum Case	NAS1008-8 .5000-20	A286	.24	Total Tension Yield	5.10.1.1-6
SDG39137847-001 SDG39135727	Interface Joint to Upper Vacuum Case	NAS1008-8 .5000-20	A286	.23	Total Tension Yield	5.10.1.1-14
SDG39137848-002 SDG39135735	Mounting Bracket to Lower Trunnion Bridge Beam	NAS1351N4-12 .2500-28	A286	.14	Total Tension Yield	5.10.1.1-22
SDG39137848-003 SDG39135730	Mounting Bracket to Sill Joint	NAS1351N4-20 .2500-28	A286	.13	Total Tension Yield	5.10.1.1-30
SDG39137853-301 SDG39137847-001	External Bumper to Interface Joint	NAS1133E4 .1900-32	A286	.10	Total Tension Yield	5.10.1.1-38
SDG39137848-002 SDG39137853-301	Mounting Bracket to External Bumper	NAS1133E4 .1900-32	A286	.10	Total Tension Yield	5.10.1.1-46
SDG39137848-003 SDG39137853-301	Mounting Bracket to External Bumper	NAS1133E4 .1900-32	A286	.10	Total Tension Yield	5.10.1.1-54
SDG39137858-002 SDG39137855-001	Inner Plate to Standoff B	NAS1004-1 .2500-28	A286	.10	Total Tension Yield	5.10.1.1-62
SDG39137853-301 SDG39137855-001	External Bumper to Standoff B	NAS1004-40 .2500-28	A286	.09	Combined Shear, Tension and Bending Ultimate	5.10.1.1-69
SDG39137849 SDG39137853-301	Corner Bracket to External Bumper	NAS1398DFC4-3 .125 Dia	AL ALY 2017-T4	1.97	Tensile Ultimate	5.10.1.1-72

Table 5.10.1.3 Fastener Fail-Safe Minimum Margins of Safety

Dwg/Part Number	Description	Fastener	Material	$MS_{fail\text{-}safe}$	Failure Mode	Reference Page
SDG39137847-001 SDG39135737	Interface Joint to Lower Vacuum Case	NAS1008-8 .5000-20	A286	.82	Combined Shear, Tension and Bending Ultimate	5.10.1.1-7
SDG39137847-001 SDG39135727	Interface Joint to Upper Vacuum Case	NAS1008-8 .5000-20	A286	.82	Combined Shear, Tension and Bending Ultimate	5.10.1.1-15
SDG39137848-002 SDG39135735	Mounting Bracket to Lower Trunnion Bridge Beam	NAS1351N4-12 .2500-28	A286	.22	Total Thread Shear Ultimate	5.10.1.1-23
SDG39137848-003 SDG39135730	Mounting Bracket to Sill Joint	NAS1351N4-20 .2500-28	A286	.21	Total Thread Shear Ultimate	5.10.1.1-31
SDG39137853-301 SDG39137847-001	External Bumper to Interface Joint	NAS1133E4 .1900-32	A286	.17	Total Thread Shear Ultimate	5.10.1.1-39
SDG39137848-002 SDG39137853-301	Mounting Bracket to External Bumper	NAS1133E4 .1900-32	A286	.17	Total Thread Shear Ultimate	5.10.1.1-47
SDG39137848-003 SDG39137853-301	Mounting Bracket to External Bumper	NAS1133E4 .1900-32	A286	.16	Total Thread Shear Ultimate	5.10.1.1-55
SDG39137858-002 SDG39137855-001	Inner Plate to Standoff B	NAS1004-1 .2500-28	A286	.62	Combined Shear, Tension and Bending Ultimate	5.10.1.1-63
SDG39137853-301 SDG39137855-001	External Bumper to Standoff B	NAS1004-40 .2500-28	A286	.09	Combined Shear, Tension and Bending Ultimate	5.10.1.1-70
SDG39137849 SDG39137853-301	Corner Bracket to External Bumper	NAS1398DFC4-3 .125 Dia	AL ALY 2017-T4	1.97	Tensile Ultimate	5.10.1.1-73

Notes:

1. Factors of Safety are 2.0 for Ultimate and 1.25 for Yield.
2. Boundary conditions are at nine AMS-2 bolts distributed as two along the Sill Joint, three along the Lower Trunnion Bridge Beam, two along the Lower Vacuum Case, and two along the Upper Vacuum Case.
3. 64 launch load cases, 64 landing load cases were applied to the DS.
4. Factors of Safety for Fail-Safe analysis are 1.0 for Ultimate and 1.0 for Yield.

5.10.1.2 Introduction

The Port Side Debris Shield (DS) provides shielding for the pressurized vessels on AMS-02 Transition Radiation Detector (TRD) tanks (Xenon, CO2 and Mixing) to prevent catastrophic rupture of these tanks in the event of MMOD impact which would release high-velocity fragments creating a potential hazard for the crew, Space Shuttle, and the International Space Station.

Structural Description

The Port DS (Figure 5.10.1.1 Port Debris Shield Assembly, SEG39137851) consists of two thin aluminum panels sandwiching a ballistic blanket and it's supports (Figure 5.10.1.6 Port Debris Shield Mounting Plates Supporting the Ballistic Blanket). The three layers are separated by aluminum standoffs (Figure 5.10.1.5 Transparent View Looking Through the Side of External Bumper at Standoffs). Bolts are used to connect the various panels.

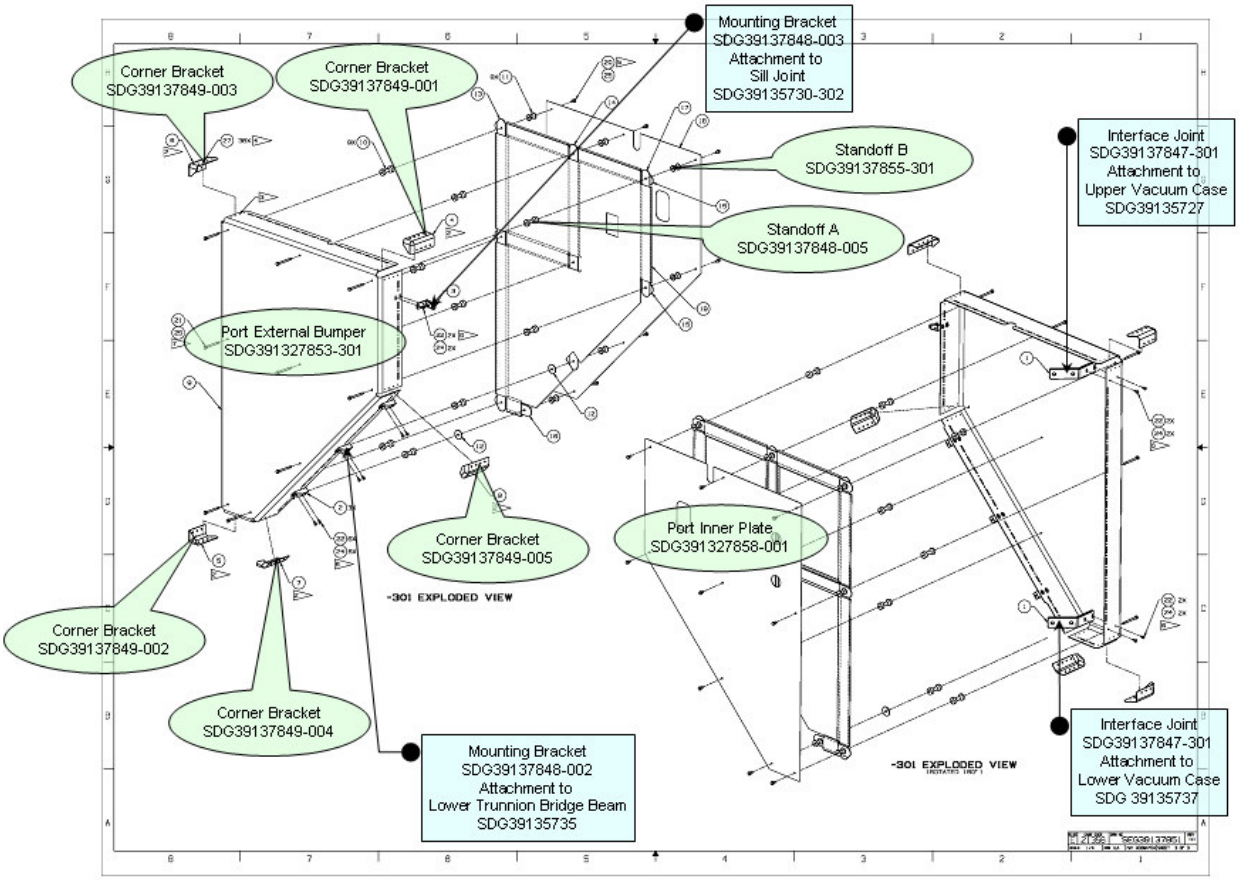

Figure 5.10.1.1 Port Debris Shield Assembly, SEG39137851

Figure 5.10.1.2 Port Debris Shield with the Unique Support Structure (USS), shows a top view of where the Port DS fits into the USS. While Figure 5.10.1.3 Port Debris Shield with the USS Assembly View, shows an exploded view of the Port DS and some of the tanks it protects.

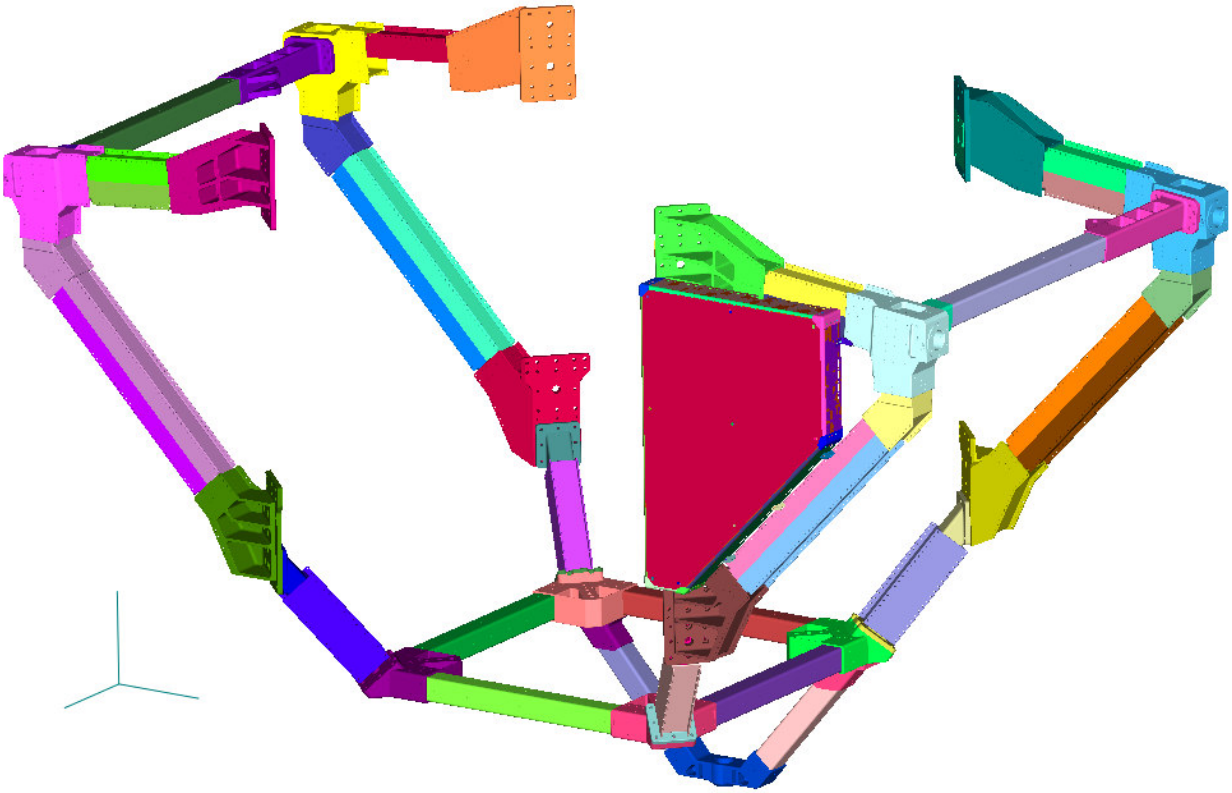

Figure 5.10.1.2 Port Debris Shield with the Unique Support Structure (USS)

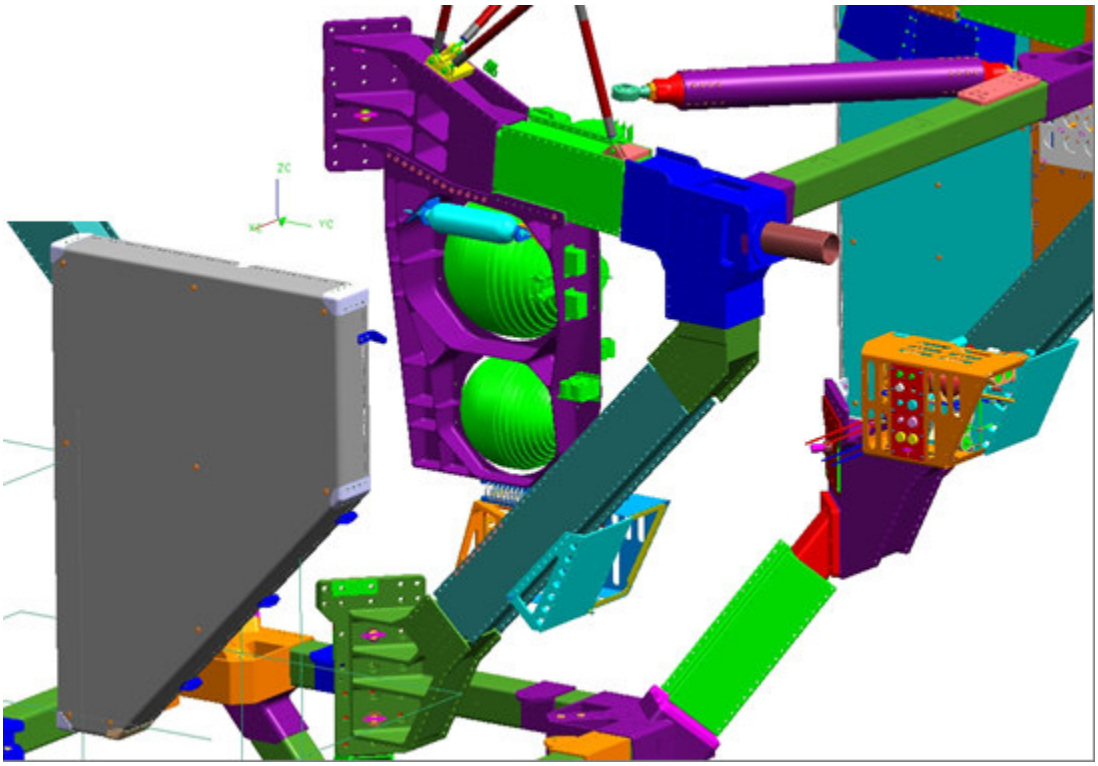

Figure 5.10.1.3 Port Debris Shield with the USS Assembly View

Figure 5.10.1.4 Features of the Port Debris Shield, shows a bottom view of the Port DS with some of the features highlighted.

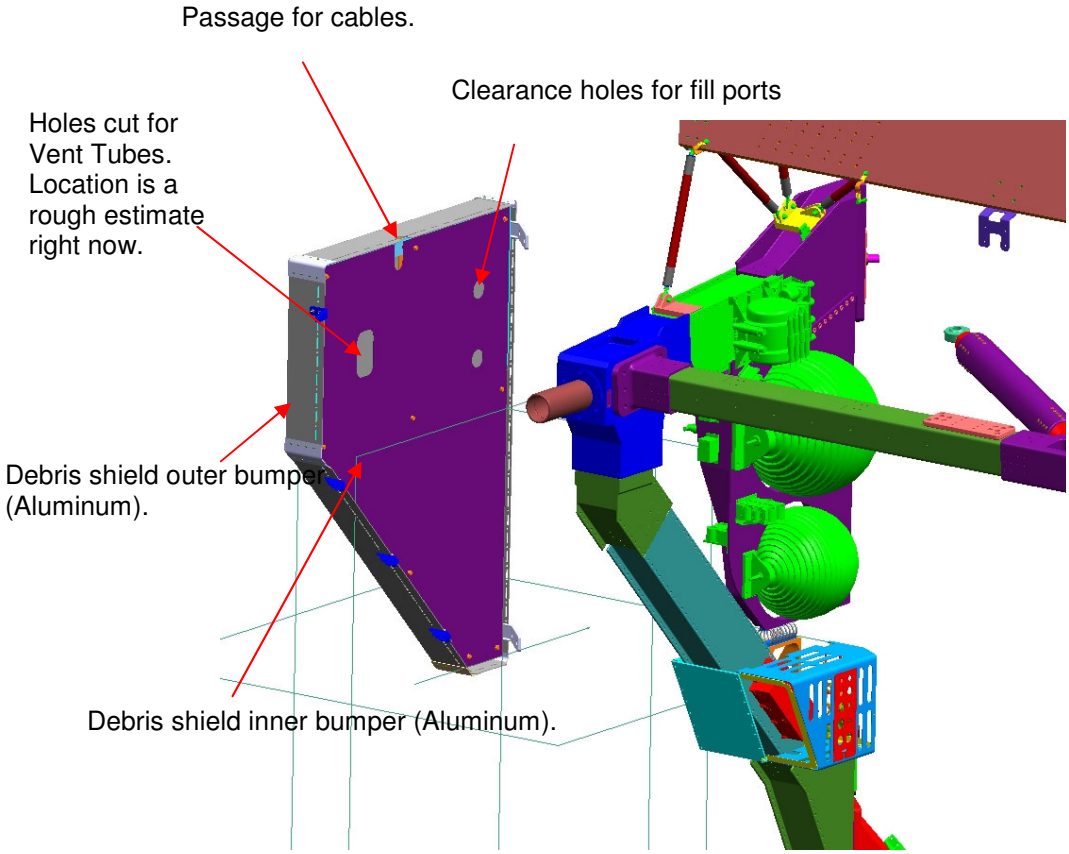

Figure 5.10.1.4 Features of the Port Debris Shield

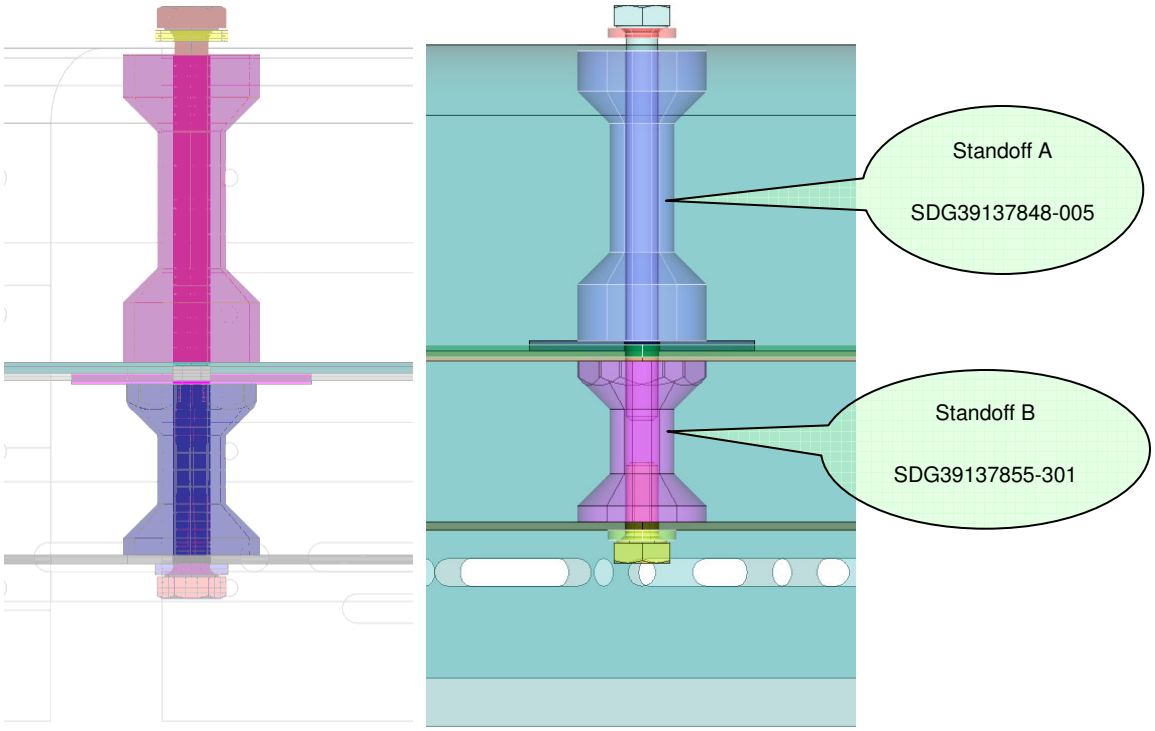

Figure 5.10.1.5 Transparent View Looking Through the Side of External Bumper at Standoffs

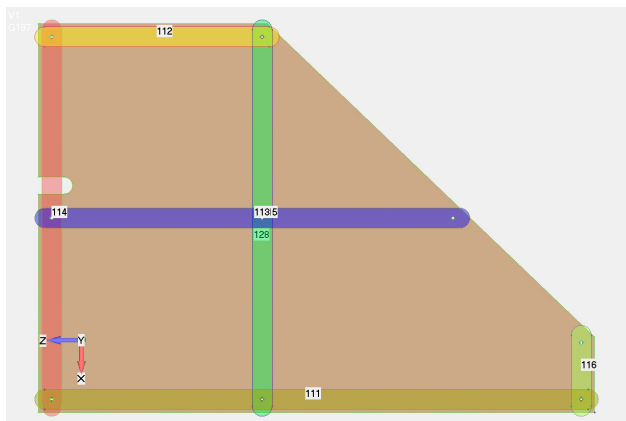

Figure 5.10.1.6 Port Debris Shield Mounting Plates Supporting the Ballistic Blanket

The Port DS attaches to the Sill Joint with two fasteners, to the Lower Trunnion Bridge Beam with three fasteners, to the Lower Vacuum Case with two fasteners, and to the Upper Vacuum Case with two fasteners (Figure 5.10.1.7 Port Debris Shield Mounting Brackets).

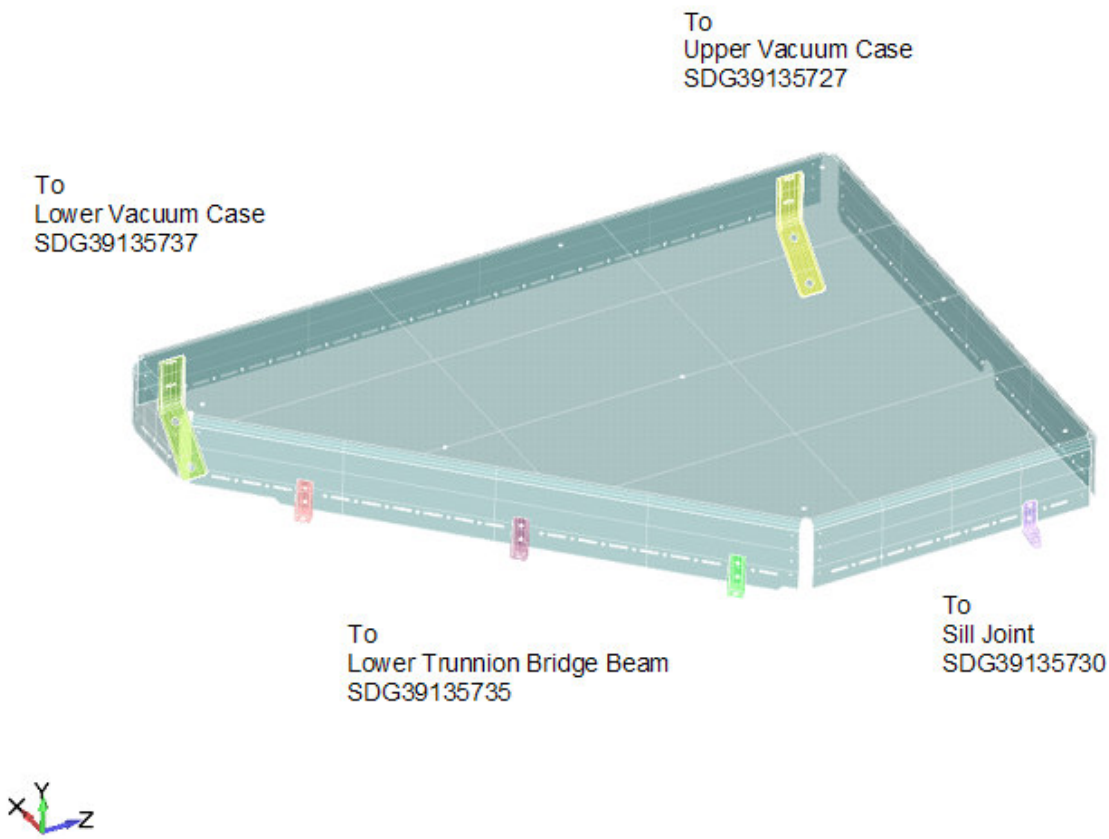

Figure 5.10.1.7 Port Debris Shield Mounting Brackets

Load Conditions

An initial assessment of the Shuttle flight loads was made using the secondary structure load factors provided in Table 4-4 of the AMS-02 Structural Verification Plan (JSC-28792, Rev. E). However, these loads are very conservative and the results of the analysis showed that the structural margins were unacceptable. The load factors are provided in Table 5.10.1.4 Launch/Landing Design Limit Load Factors for Small Secondary Structures for reference.

Table 5.10.1.4 Launch/Landing Design Limit Load Factors for Small Secondary Structures

Weight (pounds)	Load Factor (g)
<20	40
20-50	31
50-100	22
100-200	17
200-500	13

To reduce the conservatism for the flight loads assessment, the Port DS math model was integrated with the math model of the full AMS-02 payload. The liftoff and landing load factors from the AMS-02 design coupled loads analysis (as specified in Table 5-2 of the AMS-02 SVP) were applied to the integrated math model. These loads are provided in Table 5.10.1.5 Second DCLA Liftoff and Landing Load Factors for reference.

Table 5.10.1.5 Second DCLA Liftoff and Landing Load Factors

Event	Nx	Ny	Nz	Rx	Ry	Rz
Liftoff	-3.7 / 0.4	-1.4 / 1.6	-1.4 / 1.5	-4.5 / 4.1	-8.4 / 11.0	-3.9 / 4.1
Abort Landing	-1.2 / 1.3	-0.7 / 0.6	-2.1 / 5.6	-5.2 / 4.7	-10.7 / 13.9	-6.0 / 4.8

A static loads analysis was performed using NASTRAN with 64 subcases representing all combinations of the liftoff load factors and 64 subcases representing all combinations of the landing load factors. Loads and stresses were then recovered from this integrated analysis for the Port DS interface and internal components and used to compute the structural strength margins.

Factors of Safety

The hardware is designed with an Ultimate Factor of Safety of 2.0 and a Yield Factor of Safety of 1.25 against limit loads.

Materials and Temperature

Table of Material Allowables

The materials, and their allowables, used in the Port Debris Shield are shown in Table 5.10.1.6 Material Allowables.

Table 5.10.1.6 Material Allowables

Dwg/Part Number	Description	Material	Allowables
SDG39137847-001	Debris Shield Interface Joint Bracket	AL ALY 7075-T7351 AMS-QQ-A-250/12	F_{tu} = 66000 psi F_{ty} = 55000 psi F_{su} = 39000 psi
SDG39137848-002 SDG39137848-003	Debris Shield Mounting Brackets	AL ALY 6061-T651 AMS-QQ-A-250/11	F_{tu} = 42000 psi F_{ty} = 36000 psi F_{su} = 27000 psi
SDG39137849-001 SDG39137849-002 SDG39137849-003 SDG39137849-004	Debris Shield Corner Bracket	AL ALY 6061-T651 AMS-QQ-A-250/11	F_{tu} = 42000 psi F_{ty} = 36000 psi F_{su} = 27000 psi
SDG39137853-001	Port External Bumper Assy	AL ALY 7075-T73 AMS-QQ-A-250/12	F_{tu} = 67000 psi F_{ty} = 55000 psi F_{su} = 38000 psi
SDG39137858-001	Debris Shield Inner Plate	AL ALY 7075-T73 AMS-QQ-A-250/12	F_{tu} = 67000 psi F_{ty} = 55000 psi F_{su} = 38000 psi

Temperature Degradation

The temperature extremes are -76°F to 140°F.

5.10.1.3 Description of the Port DS Finite Element Model

The FEMAP modeling software was used to generate a finite element model of the Port DS for structural analysis using NASTRAN.

1. The geometry of each part was identified by a CAD model (Parasolid format) that was provided by the design group. This geometry was used as the basis for generating the finite element mesh.
2. The External Bumper, Inner Plate (bumper), Corner Brackets, and Mounting Brackets are modeled using plate elements (CQUAD4 and CTRIA3).
3. The Mounting Bracket to USS and the Mounting Bracket to External Bumper fasteners are represented by CBUSH elements with stiffness values for the three translation directions that represent axial and shear stiffness.
4. The standoffs that provide separation between the External Bumper, Ballistic Blanket, and Inner Plate are modeled with beam (CBAR) elements.
5. The Ballistic Blanket and it's supports are represented by CMass elements with the total weight of the blanket and it's supports evenly distributed at the intersections with the Standoffs.
6. The Port DS model is integrated with the USS model.

A summary from NASTRAN of the finite elements comprising the model is provided below.

```
        M O D E L   S U M M A R Y

NUMBER OF GRID     POINTS   =   279432

NUMBER OF CBAR     ELEMENTS =    22467
NUMBER OF CBEAM    ELEMENTS =    15152
NUMBER OF CBUSH    ELEMENTS =     3168
NUMBER OF CHEXA    ELEMENTS =     1640
NUMBER OF CONM2    ELEMENTS =     1649
NUMBER OF CPENTA   ELEMENTS =      376
NUMBER OF CQUAD4   ELEMENTS =   229969
NUMBER OF CROD     ELEMENTS =       42
NUMBER OF CTETRA   ELEMENTS =      216
NUMBER OF CTRIA3   ELEMENTS =    17956

NUMBER OF RBE2     ELEMENTS =    13701
NUMBER OF RBE3     ELEMENTS =      194
```

Description of the Integrated Port DS and Full Payload Math Model

The 2-06 version of the AMS-02 loads model was used to represent the payload in the integrated model. The Port DS math model described in the preceding sections was connected to the payload model using two rigid elements (RBE2). The independent nodes for the two rigid elements are the nodes on the beam elements representing the Port DS interface with the Upper Trunnion Bridge Beam and the Lower Trunnion Bridge Beam. The dependent nodes of the rigid elements are the Port DS nodes that represent the interface bolt locations. A view of the full payload math model is shown in Figure 5.10.1.8 Finite Element Model of Port DS Integrated with Full Payload.

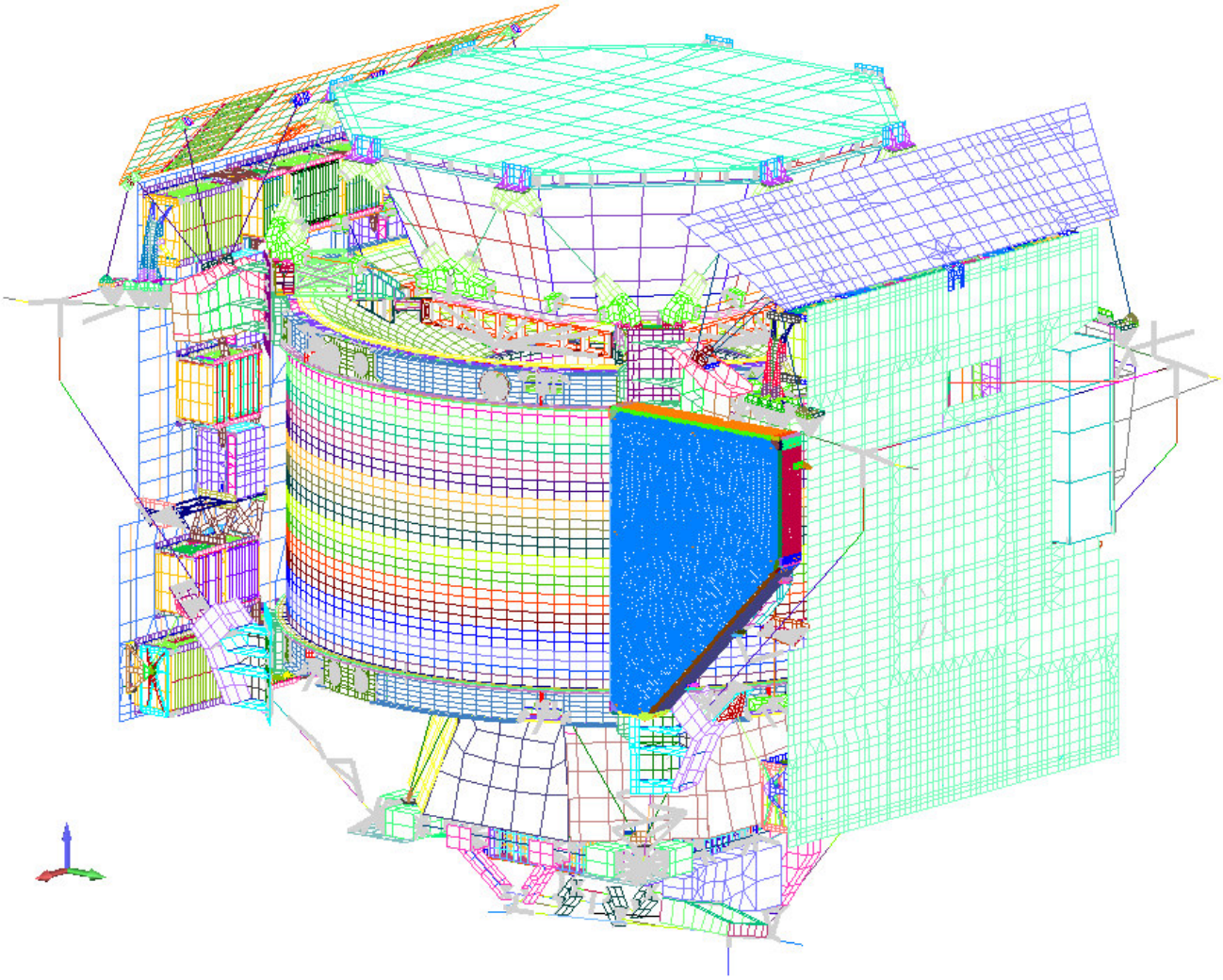

Figure 5.10.1.8 Finite Element Model of Port DS Integrated with Full Payload

Checks for the Integrated Port DS and Full Payload Math Model

Constraint and Grounding Checks

Constraint and grounding checks were performed using MSC NASTRAN. The results of these checks are shown below for an unconstrained model. The model passes the checks at all degree-of-freedom set levels with sufficiently low strain energy to indicate that there are no unintended constraints or grounding issues.

```
*** USER INFORMATION MESSAGE 7570 (GPWG1D)
RESULTS OF RIGID BODY CHECKS OF MATRIX KGG      (G-SET)  FOLLOW:
PRINT RESULTS IN ALL SIX DIRECTIONS AGAINST THE LIMIT OF   4.703487E-01
DIRECTION        STRAIN ENERGY        PASS/FAIL
---------        -------------        ---------
   1               1.899828E-06          PASS
   2               1.004083E-06          PASS
   3               4.015733E-06          PASS
   4               7.521169E-03          PASS
   5               4.014671E-03          PASS
   6               2.324051E-03          PASS
SOME POSSIBLE REASONS MAY LEAD TO THE FAILURE:
1. CELASI ELEMENTS CONNECTING TO ONLY ONE GRID POINT;
2. CELASI ELEMENTS CONNECTING TO NON-COINCIDENT POINTS;
3. CELASI ELEMENTS CONNECTING TO NON-COLINEAR DOF;
4. IMPROPERLY DEFINED DMIG MATRICES;
```

```
*** USER INFORMATION MESSAGE 7570 (GPWG1D)
RESULTS OF RIGID BODY CHECKS OF MATRIX KNN      (N-SET)  FOLLOW:
PRINT RESULTS IN ALL SIX DIRECTIONS AGAINST THE LIMIT OF   9.176609E-01
DIRECTION        STRAIN ENERGY        PASS/FAIL
---------        -------------        ---------
   1              1.208936E-06          PASS
   2              8.499612E-07          PASS
   3              3.474857E-06          PASS
   4              6.511780E-03          PASS
   5              3.893722E-03          PASS
   6              2.981926E-04          PASS
SOME POSSIBLE REASONS MAY LEAD TO THE FAILURE:
1. MULTIPOINT CONSTRAINT EQUATIONS WHICH DO NOT SATISFY RIGID-BODY MOTION;
2. RBE3 ELEMENTS FOR WHICH THE INDEPENDENT DEGREE-OF-FREEDOM CANNOT DESCRIBE
ALL POSSIBLE RIGID-BODY MOTIONS.
```

```
*** USER INFORMATION MESSAGE 7570 (GPWG1D)
RESULTS OF RIGID BODY CHECKS OF MATRIX KFF      (F-SET)  FOLLOW:
PRINT RESULTS IN ALL SIX DIRECTIONS AGAINST THE LIMIT OF   9.176609E-01
DIRECTION        STRAIN ENERGY        PASS/FAIL
---------        -------------        ---------
   1              1.208936E-06          PASS
   2              8.499612E-07          PASS
   3              3.474857E-06          PASS
   4              6.511780E-03          PASS
   5              3.893722E-03          PASS
   6              2.981926E-04          PASS
SOME POSSIBLE REASONS MAY LEAD TO THE FAILURE:
1. CONSTRAINTS WHICH PREVENT RIGID-BODY MOTION.
```

```
*** USER INFORMATION MESSAGE 7570 (GPWG1D)
RESULTS OF RIGID BODY CHECKS OF MATRIX KAA1     (A-SET)  FOLLOW:
PRINT RESULTS IN ALL SIX DIRECTIONS AGAINST THE LIMIT OF   9.176609E-01
DIRECTION        STRAIN ENERGY        PASS/FAIL
---------        -------------        ---------
   1              1.208936E-06          PASS
   2              8.499612E-07          PASS
   3              3.474857E-06          PASS
   4              6.511780E-03          PASS
   5              3.893722E-03          PASS
   6              2.981926E-04          PASS
IF THE MODEL HAS PASSED THE PREVIOUS CHECKS FOR THE G-SET AND N-SET,
THEN SOME POSSIBLE CAUSES ARE:
1. THE MODEL IS NOT INTENDED TO BE FREE-FREE WHICH INDICATES THAT THE MODEL IS
PROPERLY CONSTRAINED TO GROUND;
2. THE REFERENCE GRID POINT (GRID=GID ON THE GROUNDCHECK COMMAND) IS LOCATED
TOO FAR FROM THE MODEL'S CENTER OF GRAVITY. IT IS RECOMMENDED THAT THE
REFERENCE GRID POINT BE LOCATED AS CLOSE AS POSSIBLE TO THE MODEL'S CENTER
OF GRAVITY OF THE MODEL (SEE THE GRID POINT WEIGHT GENERATOR OUTPUT);
3. PARAM,AUTOSPC,YES CONSTRAINS NEAR-SINGULAR DEGREES-OF-FREEDOM. WHEN A
FINITE ELEMENT MODEL WITH AUTOSPC FAILS THE A-SET CHECK, IT IS NOT EVIDENT
THAT GROUNDING HAS OCCURRED. THE USE OF PARAM,SNORM WILL NOT ELIMINATE THE
SPURIOUS FAILURE.
```

Modal Check

A modal analysis was performed using NASTRAN to determine the modal frequencies and confirm that the model has appropriate rigid-body modes. A list of the rigid-body modes and elastic modes are provided below.

R E A L E I G E N V A L U E S

MODE NO.	EXTRACTION ORDER	EIGENVALUE	RADIANS	CYCLES	GENERALIZED MASS	GENERALIZED STIFFNESS
1	1	2.479914E-07	4.979873E-04	7.925714E-05	1.000000E+00	2.479914E-07
2	2	3.999739E-07	6.324349E-04	1.006551E-04	1.000000E+00	3.999739E-07
3	3	6.368180E-07	7.980088E-04	1.270070E-04	1.000000E+00	6.368180E-07

```
4     4       1.215952E-06    1.102702E-03    1.755005E-04    1.000000E+00    1.215952E-06
5     5       2.589807E-06    1.609288E-03    2.561261E-04    1.000000E+00    2.589807E-06
6     6       3.487992E-06    1.867617E-03    2.972404E-04    1.000000E+00    3.487992E-06
7     7       6.905704E+02    2.627871E+01    4.182386E+00    1.000000E+00    6.905704E+02
```

Mass Properties Check

Since the Port DS was run integrated with the full payload model, a NASTRAN mass properties check would not be useful as the Port DS is a small portion of the total mass of the integrated model. So, using FEMAP, a mass properties check was performed on just the Port DS.

Using FEMAP 9.3.1 > Tools > Mass Properties > Mesh Properties, the Port Debris Shield assembly FEM has a mass of 0.103216 lbf-s^2/in or a weight of 39.85 lbf.

```
Check Mass Properties
51847 Element(s) Selected...

Mass                          Center of Gravity in CSys 0
Structural   =     0.103216  X=      45.7279  Y=     52.01566  Z=     396.1079
NonStructural=           0.  X=           0.  Y=           0.  Z=           0.
Total Mass   =     0.103216  X=      45.7279  Y=     52.01566  Z=     396.1079

Inertias about CSys 0                    Inertias about C.G. in CSys 0
Ixx =     16511.53  Ixy=     245.5348    Ixx =      37.5122  Ixy=    0.0284379
Iyy =     16435.36  Iyz=     2132.587    Iyy =     24.77252  Iyz=     5.942361
Izz =     508.3945  Izx=     1869.641    Izz =     13.30104  Izx=      0.06955

Total Length (Line Elements only) =     38.31308
Total Area   (Area Elements only) =     3416.785
Total Volume (All Elements)       =     301.5013
```

Based on the Unigraphics CAD model, the Port Debris Shield assembly SDG39137851 has a weight of 36.28 lbf, without the soft goods.

5.10.1.4 Detailed Stress Analysis

The critical stresses for all components of the Port Debris Shield assembly are compared to the Ultimate and Yield strength of the Aluminum Alloy materials used in the assembly. Analysis of the fasteners used to assemble the Port DS was also performed. All margins of safety are positive.

The minimum Margins of Safety Summary of the parts are shown in Table 5.10.1.1 Parts Minimum Margins of Safety, Table 5.10.1.2 Fastener Minimum Margins of Safety, and Table 5.10.1.3 Fastener Fail-Safe Minimum Margins of Safety.

Intentionally Left Blank

Intentionally Left Blank

CHECK of Debris Shield Port (TRD) - Port External Bumper ASSY, SDG39137853

Allowables

Material Properties

AL ALY, 7075-T73, Sheet, 0.040-0.249, A, AMS-QQ-A-250/12

$F_{tu} := \mathbf{67000} \cdot psi$ *(Ref. MMPDS-03, Table 3.7.7.0(b3))*

$F_{ty} := \mathbf{55000} \cdot psi$

$F_{su} := \mathbf{38000} \cdot psi$

Factors of Safety

$FS_u := \mathbf{2.0}$ $FS_y := \mathbf{1.25}$

Temperature Reduction Factors

+ At 140°F: (For the Debris Shield, the temperature extremes are -76°F to 140°F; These temperature reduction factors are conservative for liftoff/landing conditions)

- Ultimate: $\beta_u := \mathbf{0.96}$ *(Ref. MMPDS-03, Figure 3.7.7.1.1.(c))*

- Yield: $\beta_y := \mathbf{0.96}$ *(Ref. MMPDS-03, Figure 3.7.7.1.1.(d))*

Allowable Stresses

$F_{tug} := \beta_u \cdot F_{tu}$

$F_{tug} = \mathbf{64320}\, psi$

$F_{tyg} := \beta_y \cdot F_{ty}$

$F_{tyg} = \mathbf{52800}\, psi$

$F_{sug} := \beta_u \cdot F_{su}$

$F_{sug} = \mathbf{36480}\, psi$

Port (TRD) - Port External Bumper ASSY, SDG39137853

Omitted Elements

NASPOST V.2.2 is used to sort out the maximum stresses within the load cases. For the Launch and Landing Cases, the elements at the bolt holes were removed from the NASPOST sort (see table below). These elements resulted with localized stresses and therefore the stresses were not real.

```
Port - Bumper External - Excluded Elements
    5025839 thru  5025982,    5026575 thru  5026718,    5027331 thru  5027334
    5041143 thru  5041222,    5041916 thru  5041995,    5042181 thru  5042260
    5043059 thru  5043138,    5047209 thru  5047272,    5047798 thru  5047861
    5047993 thru  5048056,    5048600 thru  5048663,    5051781 thru  5051854
    5052183             ,    5052186 thru  5052256,    5052329 thru  5052396
    5052398 thru  5052400,    5052411 thru  5052413,    5052709 thru  5052711
    5052722 thru  5052791,    5052927             ,    5052930
    5052934             ,    5052943             ,    5053123
    5053136             ,    5053139             ,    5053208 thru  5053209
    5053218             ,    5053220 thru  5053225,    5053392 thru  5053395
    5053397 thru  5053398,    5053400 thru  5053401,    5053409 thru  5053413
    5053415 thru  5053423,    5053451 thru  5053452,    5053503 thru  5053504
    5053649 thru  5053650,    5054486             ,    5054883 thru  5054946
    5055017 thru  5055080,    5055096 thru  5055159,    5055234 thru  5055297
    5056376 thru  5056449,    5056466 thru  5056485,    5057257 thru  5057286
    5057303 thru  5057366,    5057618 thru  5057685,    5057691 thru  5057693
    5057699 thru  5057706,    5057717 thru  5057719,    5057730 thru  5057732
    5057743 thru  5057745,    5057751 thru  5057753,    5057764 thru  5057766
    5058315 thru  5058317,    5058328 thru  5058330,    5058341 thru  5058343
    5058375 thru  5058386,    5058400 thru  5058463,    5058678
    5058686             ,    5058690             ,    5058693
    5058704             ,    5058713             ,    5058722
    5058728             ,    5058737             ,    5059079
    5059088             ,    5059097             ,    5059119
    5059122             ,    5059125             ,    5059128
    5059131             ,    5059134             ,    5059210 thru  5059214
    5059216 thru  5059217,    5059219             ,    5059222 thru  5059226
    5059251 thru  5059253,    5059256 thru  5059257,    5059259
    5059261             ,    5059747 thru  5059748,    5059767 thru  5059768
    5059804 thru  5059809,    5060022 thru  5060026,    5060028 thru  5060034
    5060036 thru  5060037,    5060039             ,    5060042 thru  5060046
    5060068 thru  5060070,    5060083 thru  5060085,    5060111 thru  5060112
    5060303 thru  5060307,    5060309 thru  5060310,    5060566
    5060586 thru  5060587,    5060837 thru  5060841,    5060843 thru  5060849
    5060851 thru  5060852,    5060854             ,    5060868 thru  5060869
    5060988 thru  5060992,    5061012 thru  5061014,    5061023 thru  5061025
    5061106 thru  5061113,    5061367             ,    5061380 thru  5061386
    5061388 thru  5061389,    5061454 thru  5061455,    5061610
    5061613             ,    5061641 thru  5061642,    5061655
    5061659 thru  5061660,    5061678 thru  5061679,    5061681 thru  5061682
    5061689 thru  5061690,    5061695 thru  5061696,    5061699
    5061701 thru  5061702
```

Port (TRD) - Port External Bumper ASSY, SDG39137853

Liftoff Loads

The Debris Shield model was integrated with the AMS-02 payload loads model. For the following analysis, the maximum Von-Mises, principal, and shear stresses of plate elements are selected from 64 liftoff load cases (Load Case 1001 - 1064). NASPOST V.2.2 is used to sort out the maximum stresses within the load cases. Note that the elements at the bolt holes were removed from the NASPOST sort.

NASTRAN Punch Filename: debris-shield-lo-v5.pch

Maximum Stresses *(See Appendix A28.2.6)*

$u_{tu} := 24710 \cdot psi$ *LC# 1030, ELEM# 5052163* *(Maximum Principal Stress, p.A28-11)*

$u_{ty} := 24156 \cdot psi$ *LC# 1030, ELEM# 5052163* *(Maximum Von-Mises Stress, p.A28-11)*

$u_{su} := 12665 \cdot psi$ *LC# 1030; ELEM# 5053213* *(Maximum Shear Stress, p.A-28-12)*

Margins of Safety

$$MS_{tug} := \frac{F_{tug}}{FS_u \cdot u_{tu}} - 1$$

$MS_{tug} = 0.30$ ***... Margin of Safety Tensile Ultimate***

$$MS_{tyg} := \frac{F_{tyg}}{FS_y \cdot u_{ty}} - 1$$

$MS_{tyg} = 0.75$ ***... Margin of Safety Tensile Yield***

$$MS_{sug} := \frac{F_{sug}}{FS_u \cdot u_{su}} - 1$$

$MS_{sug} = 0.44$ ***... Margin of Safety Shear Ultimate***

Port (TRD) - Port External Bumper ASSY, SDG39137853

Landing Loads

The Debris Shield model was integrated with the AMS-02 payload loads model. For the following analysis, the maximum Von-Mises, principal, and shear stresses of plate elements are selected from 64 landing load cases (Load Case 2001 - 2064). NASPOST V.2.2 is used to sort out the maximum stresses within the load cases. Note that the elements at the bolt holes were removed from the NASPOST sort.

NASTRAN Punch Filename: debris-shield-landing-v5.pch

Maximum Stresses *(See Appendix A28.2.5)*

$u_{tu} := \mathbf{29933} \cdot psi$ *LC# 2061 ELEM# 5027275* *(Maximum Principal Stress, p.A28-10)*

$u_{ty} := \mathbf{29489} \cdot psi$ *LC# 2013 ELEM# 5027330* *(Maximum Von-Mises Stress, p.A28-10)*

$u_{su} := \mathbf{16263} \cdot psi$ *LC# 2013 ELEM# 5027330* *(Maximum Shear Stress, p.A28-10)*

Margins of Safety

$$MS_{tug} := \frac{F_{tug}}{FS_u \cdot u_{tu}} - 1$$ $MS_{tug} = \mathbf{0.07}$ ***... Margin of Safety Tensile Ultimate***

$$MS_{tyg} := \frac{F_{tyg}}{FS_y \cdot u_{ty}} - 1$$ $MS_{tyg} = \mathbf{0.43}$ ***... Margin of Safety Tensile Yield***

$$MS_{sug} := \frac{F_{sug}}{FS_u \cdot u_{su}} - 1$$ $MS_{sug} = \mathbf{0.12}$ ***... Margin of Safety Shear Ultimate***

Port (TRD) - Debris Shield Inner Plate, SDG39137858-001

Allowables

Material Properties

AL ALY, 7075-T73, Sheet, 0.040-0.249, A, AMS-QQ-A-250/12

$F_{tu} := \mathbf{67000} \cdot psi$ *(Ref. MMPDS-03, Table 3.7.7.0(b3))*

$F_{ty} := \mathbf{55000} \cdot psi$

$F_{su} := \mathbf{38000} \cdot psi$

Factors of Safety

$FS_u := \mathbf{2.0}$ $FS_y := \mathbf{1.25}$

Temperature Reduction Factors

+ At 140°F: (For the Debris Shield, the temperature extremes are -76°F to 140°F; These temperature reduction factors are conservative for liftoff/landing conditions)

- Ultimate: $\beta_u := \mathbf{0.96}$ *(Ref. MMPDS-03, Figure 3.7.7.1.1.(c))*

- Yield: $\beta_y := \mathbf{0.96}$ *(Ref. MMPDS-03, Figure 3.7.7.1.1.(d))*

Allowable Stresses

$F_{tug} := \beta_u \cdot F_{tu}$

$F_{tug} = \mathbf{64320}\, psi$

$F_{tyg} := \beta_y \cdot F_{ty}$

$F_{tyg} = \mathbf{52800}\, psi$

$F_{sug} := \beta_u \cdot F_{su}$

$F_{sug} = \mathbf{36480}\, psi$

Port (TRD) - Debris Shield Inner Plate, SDG39137858-001

Omitted Elements

NASPOST V.2.2 is used to sort out the maximum stresses within the load cases. For the Launch and Landing Cases, the elements at the bolt holes were removed from the NASPOST sort (see table below). These elements resulted with localized stresses and therefore the stresses were not real.

```
Port - Bumper Inner - Excluded Elements
    5130875 thru  5131018,    5131135 thru  5131278
```

Port (TRD) - Debris Shield Inner Plate, SDG39137858-001

Liftoff Loads

The Debris Shield model was integrated with the AMS-02 payload loads model. For the following analysis, the maximum Von-Mises, principal, and shear stresses of plate elements are selected from 64 liftoff load cases (Load Case 1001 - 1064). NASPOST V.2.2 is used to sort out the maximum stresses within the load cases. Note that the elements at the bolt holes were removed from the NASPOST sort.

NASTRAN Punch Filename: debris-shield-lo-v5.pch

Maximum Stresses *(See Appendix A28.2.6)*

$u_{tu} := \mathbf{17796} \cdot psi$ *LC# 1014, ELEM# 5131485* *(Maximum Principal Stress, p.A28-12)*

$u_{ty} := \mathbf{17428} \cdot psi$ *LC# 1014, ELEM# 5131485* *(Maximum Von-Mises Stress, p.A28-12)*

$u_{su} := \mathbf{9025} \cdot psi$ *LC# 1014, ELEM# 5131485* *(Maximum Shear Stress, p.A28-12)*

Margins of Safety

$$MS_{tug} := \frac{F_{tug}}{FS_u \cdot u_{tu}} - 1$$

$MS_{tug} = \mathbf{0.81}$ ***... Margin of Safety Tensile Ultimate***

$$MS_{tyg} := \frac{F_{tyg}}{FS_y \cdot u_{ty}} - 1$$

$MS_{tyg} = \mathbf{1.42}$ ***... Margin of Safety Tensile Yield***

$$MS_{sug} := \frac{F_{sug}}{FS_u \cdot u_{su}} - 1$$

$MS_{sug} = \mathbf{1.02}$ ***... Margin of Safety Shear Ultimate***

Port (TRD) - Debris Shield Inner Plate, SDG39137858-001

Landing Loads

The Debris Shield model was integrated with the AMS-02 payload loads model. For the following analysis, the maximum Von-Mises, principal, and shear stresses of plate elements are selected from 64 landing load cases (Load Case 2001 - 2064). NASPOST V.2.2 is used to sort out the maximum stresses within the load cases. Note that the elements at the bolt holes were removed from the NASPOST sort.

NASTRAN Punch Filename: debris-shield-landing-v5.pch

Maximum Stresses *(See Appendix A28.2.5)*

$u_{tu} := 12089 \cdot psi$ *LC# 2014, ELEM# 5131485* *(Maximum Principal Stress, p.A28-10)*

$u_{ty} := 12648 \cdot psi$ *LC# 2014, ELEM# 5131485* *(Maximum Von-Mises Stress, p.A28-10)*

$u_{su} := 6592 \cdot psi$ *LC# 2014, ELEM# 5131485* *(Maximum Shear Stress, p.A28-10)*

Margins of Safety

$$MS_{tug} := \frac{F_{tug}}{FS_u \cdot u_{tu}} - 1$$

$MS_{tug} = 1.66$ ***... Margin of Safety Tensile Ultimate***

$$MS_{tyg} := \frac{F_{tyg}}{FS_y \cdot u_{ty}} - 1$$

$MS_{tyg} = 2.34$ ***... Margin of Safety Tensile Yield***

$$MS_{sug} := \frac{F_{sug}}{FS_u \cdot u_{su}} - 1$$

$MS_{sug} = 1.77$ ***... Margin of Safety Shear Ultimate***

Port (TRD) - Debris Shield Corner Bracket, SDG39137849

Allowables

Material Properties

AL ALY, 6061-T651, Plate, 0.250-2.000, A, AMS-QQ-A-250/11

$F_{tu} := 42000 \cdot psi$ *(Ref. MMPDS-03, Table 3.6.2.0(d))*

$F_{ty} := 36000 \cdot psi$

$F_{su} := 27000 \cdot psi$

Factors of Safety

$FS_u := 2.0$ $FS_y := 1.25$

Temperature Reduction Factors

+ At 140°F: (For the Debris Shield, the temperature extremes are -76°F to 140°F; These temperature reduction factors are conservative for liftoff/landing conditions)

- Ultimate: $\beta_u := 0.96$ *(Ref. MMPDS-03, Figure 3.6.2.2.1(a))*

- Yield: $\beta_y := 0.96$ *(Ref. MMPDS-03, Figure 3.6.2.2.1(b))*

Allowable Stresses

$F_{tug} := \beta_u \cdot F_{tu}$

$F_{tug} = 40320\ psi$

$F_{tyg} := \beta_y \cdot F_{ty}$

$F_{tyg} = 34560\ psi$

$F_{sug} := \beta_u \cdot F_{su}$

$F_{sug} = 25920\ psi$

Port (TRD) - Debris Shield Corner Bracket, SDG39137849

Omitted Elements

NASPOST V.2.2 is used to sort the maximum stresses across all load cases. For the Launch and Landing Cases, the elements around the perimeter of bolt holes, where the bolts were modeled with RBE2's, were removed from the NASPOST sort (see table below). These elements had artificially high localized stresses because of their proximity to the RBE2.

```
Port - Brackets Corner - Excluded Elements
    5000713 thru  5000776,    5000798 thru  5000861,    5001570 thru  5001633
    5001662 thru  5001725,    5002442 thru  5002489,    5002514 thru  5002561
    5003146 thru  5003209,    5003235 thru  5003298,    5003734 thru  5003797
    5003825 thru  5003888,    5006146 thru  5006209,    5006238 thru  5006301
    5006994 thru  5007057,    5007081 thru  5007144,    5008169 thru  5008216
    5008241 thru  5008288,    5014914 thru  5014977,    5015005 thru  5015068
    5015494 thru  5015557,    5015583 thru  5015646
```

Port (TRD) - Debris Shield Corner Bracket, SDG39137849

Liftoff Loads

The Debris Shield model was integrated with the AMS-02 payload loads model. For the following analysis, the maximum Von-Mises, Principal, and Shear stresses of plate elements are selected from 64 liftoff load cases (Load Case 1001 - 1064). NASPOST V.2.2 is used to sort the maximum stresses across the load cases. Note that the elements at the bolt holes were removed from the NASPOST sort.

NASTRAN Punch Filename: debris-shield-lo-v5.pch

Maximum Stresses *(See Appendix A28.2.6)*

$u_{tu} := \mathbf{11501} \cdot psi$ *LC# 1004, ELEM# 5002721* *(Maximum Principal Stress, p.A28-12)*

$u_{ty} := \mathbf{11910} \cdot psi$ *LC# 1004, ELEM# 5002723* *(Maximum Von-Mises Stress, p.A28-12)*

$u_{su} := \mathbf{6213} \cdot psi$ *LC# 1004; ELEM# 5002723* *(Maximum Shear Stress, p.A28-12)*

Margins of Safety

$$MS_{tug} := \frac{F_{tug}}{FS_u \cdot u_{tu}} - 1$$ $MS_{tug} = \mathbf{0.75}$ ***... Margin of Safety Tensile Ultimate***

$$MS_{tyg} := \frac{F_{tyg}}{FS_y \cdot u_{ty}} - 1$$ $MS_{tyg} = \mathbf{1.32}$ ***... Margin of Safety Tensile Yield***

$$MS_{sug} := \frac{F_{sug}}{FS_u \cdot u_{su}} - 1$$ $MS_{sug} = \mathbf{1.09}$ ***... Margin of Safety Shear Ultimate***

Port (TRD) - Debris Shield Corner Bracket, SDG39137849

Landing Loads

The Debris Shield model was integrated with the AMS-02 payload loads model. For the following analysis, the maximum Von-Mises, Principal, and Shear stresses of plate elements are selected from 64 landing load cases (Load Case 2001 - 2064). NASPOST V.2.2 is used to sort the maximum stresses across the load cases. Note that the elements at the bolt holes were removed from the NASPOST sort.

NASTRAN Punch Filename: debris-shield-landing-v5.pch

Maximum Stresses *(See Appendix A28.2.5)*

$u_{tu} := \mathbf{6915} \cdot psi$ *LC# 2045, ELEM# 5008602* *(Maximum Principal Stress, p.A28-10)*

$u_{ty} := \mathbf{7041} \cdot psi$ *LC# 2045, ELEM# 5000694* *(Maximum Von-Mises Stress, p.A28-11)*

$u_{su} := \mathbf{3833} \cdot psi$ *LC# 2045; ELEM# 5000694* *(Maximum Shear Stress, p.A28-11)*

Margins of Safety

$$MS_{tug} := \frac{F_{tug}}{FS_u \cdot u_{tu}} - 1$$

$MS_{tug} = \mathbf{1.92}$ ***... Margin of Safety Tensile Ultimate***

$$MS_{tyg} := \frac{F_{tyg}}{FS_y \cdot u_{ty}} - 1$$

$MS_{tyg} = \mathbf{2.93}$ ***... Margin of Safety Tensile Yield***

$$MS_{sug} := \frac{F_{sug}}{FS_u \cdot u_{su}} - 1$$

$MS_{sug} = \mathbf{2.38}$ ***... Margin of Safety Shear Ultimate***

Port (TRD) - Debris Shield Mounting Brackets, SDG39137848

Allowables

Material Properties

AL ALY 6061-T651, Plate, 0.250-2.000, A, AMS-QQ-A-250/11

$F_{tu} := \mathbf{42000} \cdot psi$ *(Ref. MMPDS-03, Table 3.6.2.0(b2))*

$F_{ty} := \mathbf{36000} \cdot psi$

$F_{su} := \mathbf{27000} \cdot psi$

Factors of Safety

$FS_u := \mathbf{2.0}$ $FS_y := \mathbf{1.25}$

Temperature Reduction Factors

+ At 140°F: (For the Debris Shield, the temperature extremes are -76°F to 140°F; These temperature reduction factors are conservative for liftoff/landing conditions)

- Ultimate: $\beta_u := \mathbf{0.96}$ *(Ref. MMPDS-03, Figure 3.6.2.2.1(a))*

- Yield: $\beta_y := \mathbf{0.96}$ *(Ref. MMPDS-03, Figure 3.6.2.2.1(b))*

Allowable Stresses

$F_{tug} := \beta_u \cdot F_{tu}$

$F_{tug} = \mathbf{40320}\, psi$

$F_{tyg} := \beta_y \cdot F_{ty}$

$F_{tyg} = \mathbf{34560}\, psi$

$F_{sug} := \beta_u \cdot F_{su}$

$F_{sug} = \mathbf{25920}\, psi$

Port (TRD) - Debris Shield Mounting Brackets, SDG39137848

Omitted Elements

NASPOST V.2.2 is used to sort the maximum stresses across all load cases. For the Launch and Landing Cases, the elements around the perimeter of bolt holes, where the bolts were modeled with RBE2's, were removed from the NASPOST sort (see table below). These elements had artificially high localized stresses because of their proximity to the RBE2.

```
Port - Brackets Mounting and Interface Joint - Excluded Elements
    5000094 thru  5000114,    5000130 thru  5000154,    5000179 thru  5000198
    5000200 thru  5000201,    5000405 thru  5000436,    5000465 thru  5000492
    5000509 thru  5000511,    5000548 thru  5000550,    5007830 thru  5007861
    5007887 thru  5007915,    5008111             ,    5008113 thru  5008114
    5008701 thru  5008732,    5008758 thru  5008786,    5008982
    5008984 thru  5008985,    5009157 thru  5009166,    5009231 thru  5009240
    5009266 thru  5009269,    5009294 thru  5009295,    5009314 thru  5009316
    5009322 thru  5009327,    5009330 thru  5009334,    5009338
    5009341 thru  5009345,    5009504 thru  5009505,    5009517 thru  5009519
    5009562 thru  5009570,    5009662 thru  5009664,    5009933 thru  5009935
    5009941 thru  5009942,    5009945 thru  5009949,    5009951 thru  5009957
    5009972             ,    5009974 thru  5009977,    5010046 thru  5010051
    5010114 thru  5010115,    5010434 thru  5010443,    5010460
    5010475             ,    5010483             ,    5010508 thru  5010517
    5010543 thru  5010546,    5010571 thru  5010572,    5010591 thru  5010593
    5010599 thru  5010604,    5010607 thru  5010611,    5010615
    5010618 thru  5010622,    5010781 thru  5010782,    5010794 thru  5010796
    5010839 thru  5010847,    5010939 thru  5010941,    5011210 thru  5011212
    5011218 thru  5011219,    5011222 thru  5011226,    5011228 thru  5011234
    5011249             ,    5011251 thru  5011254,    5011323 thru  5011328
    5011391 thru  5011392,    5011563 thru  5011594,    5011597 thru  5011628
    5011873 thru  5011904,    5011907 thru  5011938,    5012133 thru  5012164
    5012167 thru  5012198,    5012990 thru  5013021,    5013136 thru  5013167
    5013282 thru  5013313,    5200000 thru  5200011
```

Port (TRD) - Debris Shield Mounting Brackets, SDG39137848

Liftoff Loads

The Debris Shield model was integrated with the AMS-02 payload loads model. For the following analysis, the maximum Von-Mises, Principal, and Shear stresses of plate elements are selected from 64 liftoff load cases (Load Case 1001 - 1064). NASPOST V.2.2 is used to sort the maximum stresses across the load cases. Note that the elements at the bolt holes were removed from the NASPOST sort.

NASTRAN Punch Filename: debris-shield-lo-v5.pch

Maximum Stresses *(See Appendix A28.2.2)*

$u_{tu} := \mathbf{15633} \cdot psi$ *LC# 1020 ELEM# 5000372* *(Maximum Principal Stress, p.A28-6)*

$u_{ty} := \mathbf{14735} \cdot psi$ *LC# 1020 ELEM# 5000413* *(Maximum Von-Mises Stress, p.A28-6)*

$u_{su} := \mathbf{7817} \cdot psi$ *LC# 1020 ELEM# 5000372* *(Maximum Shear Stress, p.A28-6)*

Margins of Safety

$$MS_{tug} := \frac{F_{tug}}{FS_u \cdot u_{tu}} - 1$$

$MS_{tug} = \mathbf{0.290}$ ***... Margin of Safety Tensile Ultimate***

$$MS_{tyg} := \frac{F_{tyg}}{FS_y \cdot u_{ty}} - 1$$

$MS_{tyg} = \mathbf{0.88}$ ***... Margin of Safety Tensile Yield***

$$MS_{sug} := \frac{F_{sug}}{FS_u \cdot u_{su}} - 1$$

$MS_{sug} = \mathbf{0.66}$ ***... Margin of Safety Shear Ultimate***

Port (TRD) - Debris Shield Mounting Brackets, SDG39137848

Landing Loads

The Debris Shield model was integrated with the AMS-02 payload loads model. For the following analysis, the maximum Von-Mises, Principal, and Shear stresses of plate elements are selected from 64 landing load cases (Load Case 2001 - 2064). NASPOST V.2.2 is used to sort the maximum stresses across the load cases. Note that the elements at the bolt holes were removed from the NASPOST sort.

NASTRAN Punch Filename: debris-shield-landing-v5.pch

Maximum Stresses *(See Appendix A28.2.1)*

$u_{tu} := 12342 \cdot psi$ *LC# 2045 ELEM# 5000420* *(Maximum Principal Stress, p.A28-4)*

$u_{ty} := 12112 \cdot psi$ *LC# 2045 ELEM# 5000413* *(Maximum Von-Mises Stress, p.A28-4)*

$u_{su} := 6171 \cdot psi$ *LC# 2045 ELEM# 5000420* *(Maximum Shear Stress, p.A28-5)*

Margins of Safety

$$MS_{tug} := \frac{F_{tug}}{FS_u \cdot u_{tu}} - 1$$

$MS_{tug} = 0.63$ ***... Margin of Safety Tensile Ultimate***

$$MS_{tyg} := \frac{F_{tyg}}{FS_y \cdot u_{ty}} - 1$$

$MS_{tyg} = 1.28$ ***... Margin of Safety Tensile Yield***

$$MS_{sug} := \frac{F_{sug}}{FS_u \cdot u_{su}} - 1$$

$MS_{sug} = 1.10$ ***... Margin of Safety Shear Ultimate***

Port (TRD) - Debris Shield Interface Joint Bracket, SDG39137847

Allowables

Material Properties

AL ALY 7075-T7351, Plate, 1.501-2.000, A, AMS-QQ-A-250/12

$F_{tu} := \mathbf{66000} \cdot psi$ *(Ref. MMPDS-03, Table 3.7.7.0(b3))*

$F_{ty} := \mathbf{55000} \cdot psi$

$F_{su} := \mathbf{39000} \cdot psi$

Factors of Safety

$FS_u := \mathbf{2.0}$ $FS_y := \mathbf{1.25}$

Temperature Reduction Factors

+ At 140°F: (For the Debris Shield, the temperature extremes are -76°F to 140°F; These temperature reduction factors are conservative for liftoff/landing conditions)

- Ultimate: $\beta_u := \mathbf{0.96}$ *(Ref. MMPDS-03, Figure 3.7.7.1.1.(c))*

- Yield: $\beta_y := \mathbf{0.96}$ *(Ref. MMPDS-03, Figure 3.7.7.1.1.(d))*

Allowable Stresses

$F_{tug} := \beta_u \cdot F_{tu}$

$F_{tug} = \mathbf{63360}\, psi$

$F_{tyg} := \beta_y \cdot F_{ty}$

$F_{tyg} = \mathbf{52800}\, psi$

$F_{sug} := \beta_u \cdot F_{su}$

$F_{sug} = \mathbf{37440}\, psi$

Port (TRD) - Debris Shield Interface Joint Bracket, SDG39137847

Omitted Elements

NASPOST V.2.2 is used to sort the maximum stresses across all load cases. For the Launch and Landing Cases, the elements around the perimeter of bolt holes, where the bolts were modeled with RBE2's, were removed from the NASPOST sort (see table below). These elements had artificially high localized stresses because of their proximity to the RBE2.

```
Port - Brackets Mounting and Interface Joint - Excluded Elements
    5000094 thru  5000114,    5000130 thru  5000154,    5000179 thru  5000198
    5000200 thru  5000201,    5000405 thru  5000436,    5000465 thru  5000492
    5000509 thru  5000511,    5000548 thru  5000550,    5007830 thru  5007861
    5007887 thru  5007915,    5008111             ,    5008113 thru  5008114
    5008701 thru  5008732,    5008758 thru  5008786,    5008982
    5008984 thru  5008985,    5009157 thru  5009166,    5009231 thru  5009240
    5009266 thru  5009269,    5009294 thru  5009295,    5009314 thru  5009316
    5009322 thru  5009327,    5009330 thru  5009334,    5009338
    5009341 thru  5009345,    5009504 thru  5009505,    5009517 thru  5009519
    5009562 thru  5009570,    5009662 thru  5009664,    5009933 thru  5009935
    5009941 thru  5009942,    5009945 thru  5009949,    5009951 thru  5009957
    5009972             ,    5009974 thru  5009977,    5010046 thru  5010051
    5010114 thru  5010115,    5010434 thru  5010443,    5010460
    5010475             ,    5010483             ,    5010508 thru  5010517
    5010543 thru  5010546,    5010571 thru  5010572,    5010591 thru  5010593
    5010599 thru  5010604,    5010607 thru  5010611,    5010615
    5010618 thru  5010622,    5010781 thru  5010782,    5010794 thru  5010796
    5010839 thru  5010847,    5010939 thru  5010941,    5011210 thru  5011212
    5011218 thru  5011219,    5011222 thru  5011226,    5011228 thru  5011234
    5011249             ,    5011251 thru  5011254,    5011323 thru  5011328
    5011391 thru  5011392,    5011563 thru  5011594,    5011597 thru  5011628
    5011873 thru  5011904,    5011907 thru  5011938,    5012133 thru  5012164
    5012167 thru  5012198,    5012990 thru  5013021,    5013136 thru  5013167
    5013282 thru  5013313,    5200000 thru  5200011
```

Port (TRD) - Debris Shield Interface Joint Bracket, SDG39137847

Liftoff Loads

The Debris Shield model was integrated with the AMS-02 payload loads model. For the following analysis, the maximum Von-Mises, Principal, and Shear stresses of plate elements are selected from 64 liftoff load cases (Load Case 1001 - 1064). NASPOST V.2.2 is used to sort the maximum stresses across the load cases. Note that the elements at the bolt holes were removed from the NASPOST sort.

NASTRAN Punch Filename: debris-shield-lo-v5.pch

Maximum Stresses *(See Appendix A28.2.2)*

$u_{tu} := \mathbf{31423} \cdot psi$ *LC# 1004 ELEM# 5010484* *(Maximum Principal Stress, p.A28-6)*

$u_{ty} := \mathbf{31017} \cdot psi$ *LC# 1004 ELEM# 5010484* *(Maximum Von-Mises Stress, p.A28-7)*

$u_{su} := \mathbf{15711} \cdot psi$ *LC# 1004 ELEM# 5010484* *(Maximum Shear Stress, p.A28-7)*

Margins of Safety

$$MS_{tug} := \frac{F_{tug}}{FS_u \cdot u_{tu}} - 1$$ $MS_{tug} = \mathbf{0.008}$ ***... Margin of Safety Tensile Ultimate***

$$MS_{tyg} := \frac{F_{tyg}}{FS_y \cdot u_{ty}} - 1$$ $MS_{tyg} = \mathbf{0.36}$ ***... Margin of Safety Tensile Yield***

$$MS_{sug} := \frac{F_{sug}}{FS_u \cdot u_{su}} - 1$$ $MS_{sug} = \mathbf{0.19}$ ***... Margin of Safety Shear Ultimate***

Port (TRD) - Debris Shield Interface Joint Bracket, SDG39137847

Landing Loads

The Debris Shield model was integrated with the AMS-02 payload loads model. For the following analysis, the maximum Von-Mises, Principal, and Shear stresses of plate elements are selected from 64 landing load cases (Load Case 2001 - 2064). NASPOST V.2.2 is used to sort the maximum stresses across the load cases. Note that the elements at the bolt holes were removed from the NASPOST sort.

NASTRAN Punch Filename: debris-shield-landing-v5.pch

Maximum Stresses *(See Appendix A28.2.1)*

$u_{tu} := 31356 \cdot psi$ *LC# 2004 ELEM# 5010484* *(Maximum Principal Stress, p.A28-5)*

$u_{ty} := 30944 \cdot psi$ *LC# 2004 ELEM# 5010484* *(Maximum Von-Mises Stress, p.A28-5)*

$u_{su} := 15678 \cdot psi$ *LC# 2004 ELEM# 5010484* *(Maximum Shear Stress, p.A28-5)*

Margins of Safety

$$MS_{tug} := \frac{F_{tug}}{FS_u \cdot u_{tu}} - 1$$

$MS_{tug} = 0.01$ ***... Margin of Safety Tensile Ultimate***

$$MS_{tyg} := \frac{F_{tyg}}{FS_y \cdot u_{ty}} - 1$$

$MS_{tyg} = 0.37$ ***... Margin of Safety Tensile Yield***

$$MS_{sug} := \frac{F_{sug}}{FS_u \cdot u_{su}} - 1$$

$MS_{sug} = 0.19$ ***... Margin of Safety Shear Ultimate***

5.10.1.1 Port Debris Shield Assembly Bolt Analysis

Intentionally Left Blank

Prepared By	Name Kent Peters	Date 08/21/2008	Engineering and Science Contract Group *Structural Analysis Section*	File Name DS TRD TabAngle to LVC
Checked By	C. Bala			Draw ing No. SDG39137847
Title	Debris Shield Fastener Joint Analysis for Bolt/Washer with Insert TRD Side - Tab Angle Bracket to Lower Vacuum Case			

CHECK

Bolt := "SDG39135892-828, NAS1008-8A, .5000-20, .500 GRIP, CRES A286"

Washer := "NAS1587-8C"

Insert := "MS51831CA206, .500-20, CRES A286, 160 KSI"

Flange_1 := "Tab Angle Bracket"
Part_Number_1 := "SDG39137847"
Material_1 := "AL ALY 6061-T651 Sheet"

Flange_2 := "Lower Vacuum Case"
Part_Number_2 := "SDG39135737"
Material_2 := "AL ALY 7050-T7451"

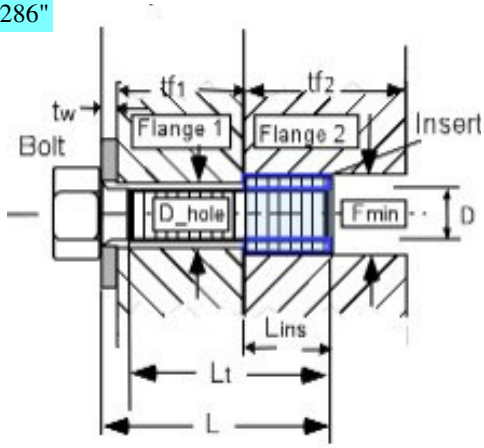

Loads

Applied tensile load $P := 201 \cdot lbf$

Applied shear load $V := 357 \cdot lbf$

Applied bending moment $M := 0 \cdot in \cdot lbf$

Factors of Safety

Ultimate $SFu := 2.0$ Yield $SFy := 1.25$

Joint Separation $SFsep := 1.2$ Fitting factor $FF := 1.15$

Temperature data

Assembly $Temp_initial := 70 \cdot deg$

Maximum $Temp_max := 140 \cdot deg$

Minimum $Temp_min := -76 \cdot deg$

Bolt and Insert Data

Nominal diameter of bolt $D := .5 \cdot in$

Number of threads/inch $Nt := 20 \cdot \frac{1}{in}$

Total length of bolt $L := 1.342 \cdot in$

Length of insert $Lins := .688 \cdot in$

Threaded length $Lt := .842 \cdot in$

Min. external diameter of insert $Fmin := .615 \cdot in$

(If bolt is fully threaded, input Lt = L)

Depth of recess for insert $lr := 0.02 \cdot in$

This file uses the calculations shown in \\escfil02\2i11_mathcad\8307_bolts\thread_data.mcd

Tue Feb 15 10:38:17 AM 2005

Washer Data

Thickness of washer $tw := .078 \cdot in$

Outer Diameter of washer $Dw := .875in$

Inner Diameter of washer $Dwi := .504 \cdot in$

Bolt head dia. across flats $dw := .741 \cdot in$ (used only if there is no washer)

Flange data

Thickness of flange 1 $tf1 := .38 \cdot in$

Thickness of flange 2 $tf2 := .75in$

Diameter of hole $D_hole := .531 \cdot in$

Note: If there is no washer, tw, Dw, and Dwi should be zero.

Material Property Data

Bolt

Temperature correction factor for bolt strength ultimate $TSu_bolt := .96$ yield $TSy_bolt := .96$

Bolt ultimate tensile allowable stress $Ftu_bolt := 140000 \cdot psi$

Bolt ultimate shear allowable stress $Fsu_bolt := 0.6 \cdot Ftu_bolt$

Bolt yield tensile allowable $Fty_bolt := 95000 \cdot psi$

Temperature correction factor for bolt modulus $TE_bolt := .98$

Modulus of elasticity of bolt $E_bolt := \left(29.1 \cdot 10^{6} \cdot psi\right)$

Thermal coefficient for bolt:

$$\beta_bolt_hot := 9.1 \cdot 10^{-6} \cdot \frac{\frac{in}{in}}{deg}$$

$$\beta_bolt_cold := 8.5 \cdot 10^{-6} \cdot \frac{\frac{in}{in}}{deg}$$

Insert

Temperature correction factor for insert strength $TS_ins := .96$

Ultimate tensile allowable stress $Ftu_ins := 140000 \cdot psi$

Ultimate shear allowable stress $Fsu_ins := 0.6 \cdot Ftu_ins$

Washer

Temperature correction factor for washer modulus $TE_washer := 1.0$

Modulus of elasticity of washer $E_washer := \left(29.1 \cdot 10^{6} \cdot psi\right)$

Flanges

Stiffness of the joint depends upon number of members in the grip of the fasteners,
Modulus of elasticity of these members, and diameters of the bolt and the washer.

Temperature correction factor for flange 1 $Tf1E := .98$ (modulus) $Tf2s := 0.91$ (strength)

Temperature correction factor for flange 2 $Tf2E := .98$ (modulus) $Fsu_f2 := 43000 \cdot psi$

Modulus of elasticity for the parts in the joint $E_flange1 := \left(10.1 \cdot 10^{6} \cdot psi\right)$ $E_flange2 := \left(10.8 \cdot 10^{6} \cdot psi\right)$

Coefficient of thermal expansion for flanges

$$\beta_flange1_hot := 12.8 \cdot 10^{-6} \cdot \frac{\frac{in}{in}}{deg} \quad \beta_flange2_hot := 12.5 \cdot 10^{-6} \cdot \frac{\frac{in}{in}}{deg}$$

$$\beta_flange1_cold := 12.1 \cdot 10^{-6} \cdot \frac{\frac{in}{in}}{deg} \quad \beta_flange2_cold := 12.1 \cdot 10^{-6} \cdot \frac{\frac{in}{in}}{deg}$$

Torque/Preload data

Maximum torque $Tmax := 651 \cdot in \cdot lbf$

Loading plane factor: $n := 0.5$

Minimum torque $Tmin := 553 \cdot in \cdot lbf$

Preload Uncertainty: $u := 0.25$

Torque coefficient: $k := 0.15$

This file uses the calculations shown in \\escfil02\2i11_mathcad\8307_bolts\bolt_stiffness_insert_RevC

Bolt Load data

Bolt/joint stiffness factor	$= 0.646$	Preload due to temperature	$Pthr_pos = 586.1 \cdot lbf$
Max. preload	$PLDmax = 11436.1 \cdot lbf$		$Pthr_neg = -1255.6 \cdot lbf$
Min. preload	$PLDmin = 3731.9 \cdot lbf$	Uncertainty factor	$u = 0.25$
Joint separation load	$Psep = 241.2 \cdot lbf$	Torque coefficient	$k = 0.15$
Max. load on the bolt(ultimate)	$Pb = 11585.4 \cdot lbf$	Loading plane factor	$n = 0.5$
Max. load on the bolt(yield)	$Pby = 11529.4 \cdot lbf$	Thread shear pullout load of bolt or insert	$Pths = 51164.1 \cdot lbf$
Bolt ultimate tensile strength	$PAt = 21111.4 \cdot lbf$	Thread shear pullout load in parent metal	$Ppths = 26007.2 \cdot lbf$

Length_check = "Bolt length is sufficient"

Summary of Margins for bolt:

Joint separation	$MS_1 = 18.88$	Direct Thread shear Ultimate	$MS_6 = 55.26$
Direct Tension Ultimate	$MS_2 = 44.67$	Total Thread shear Ultimate	$MS_7 = 1.24$
Direct Tension Yield	$MS_3 = 48.58$	Shear Ultimate	$MS_8 = 13.6$
Total Tension Ultimate	$MS_4 = 0.82$	Bending Ultimate	$MS_9 = 10$
Total Tension Yield	$MS_5 = 0.243$	Combined shear, tension and bending ultimate	$MS_{10} = 0.82$

Determination of the smallest margin of safety for the bolt, and the failure mode:

$MSbolt := \min(MS)$

$MSbolt = 0.243$ Failure_Mode = "Total Tension Yield"

Fail-safe Analysis

Fail-safe Loads

Applied tensile load $P_FS := 240 \cdot lbf$

Applied shear load $V_FS := 666 \cdot lbf$

Applied bending moment $M_FS := 0 \cdot in \cdot lbf$

Fail-safe Factors of Safety

Ultimate $SFu_FS := 1.0$

Joint Separation $SFsep_FS := 1.0$

This file uses the calculations shown in \\escfil02\2i11_mathcad\8307_bolts\bolt_stiffness_insert_FS_RevC

Mon Feb 14 12:51:39 2005

Bolt Fail-safe Load data

Joint separation load $Psep_FS = 240 \cdot lbf$

Max. load on the bolt(ultimate) $Pb_FS = 11525.2 \cdot lbf$

Summary of fail-safe Margins for bolt:

Joint separation	$MS_FS_1 = 18.97$	Total Thread shear Ultimate	$MS_FS_5 = 1.26$
Direct Tension Ultimate	$MS_FS_2 = 75.49$	Shear Ultimate	$MS_FS_6 = 14.65$
Total Tension Ultimate	$MS_FS_3 = 0.83$	Bending Ultimate	$MS_FS_7 = 10$
Direct Thread shear Ultimate	$MS_FS_4 = 93.23$	Combined shear, tension and bending ultimate	$MS_FS_8 = 0.83$

Determination of the smallest fail-safe margin of safety for the bolt, and the failure mode:

$$MSbolt_FS := \min(MS_FS)$$

$MSbolt_FS = 0.83$ Failure_Mode_FS = "Combined Shear Tension Bending Ultimate"

Bolt Hole Analysis

Minimum edge distance of flange one $edge1 := 0.470 \cdot in$

Minimum edge distance of flange two $edge2 := 0.812 \cdot in$

Shank diameter of bolt $D_shank := .4970 \cdot in$

Recall loads from bolt calculation

Safety Factors	$SFu = 2.000$	*(Ultimate)*	$SFy = 1.25$	*(Yield)*
	$FF = 1.15$	*(Fitting Factor)*		
Input Loads	$V = 357 \cdot lbf$	*(Shear Load)*	$P = 201 \cdot lbf$	*(Axial Load)*
Bolt calc results	$Pb = 11585 \cdot lbf$	*(Max Bolt Load)*		
Dimensions	$L = 1.342 \cdot in$	*(Length of Bolt)*	$tw = 0.078 \cdot in$	*(Thickness of Washer)*

Shear Tear-Out Check

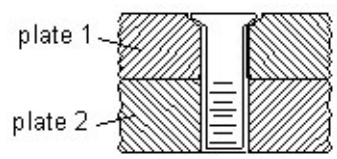

Recall bolt hole dimensions

$tf_1 := tf1$ $\quad tf_1 = 0.38 \cdot in$ *(Entire Thickness of Flange 1)* $\quad Tf1E = 0.98$

$tf_2 := tf2$ $\quad tf_2 = 0.75 \cdot in$ *(Entire Thickness of Flange 2)* $\quad Tf2E = 0.98$

$edge_1 := edge1$ $\quad edge_1 = 0.47 \cdot in$ *(Edge Distance for Hole in Plate 1)*

$edge_2 := edge2$ $\quad edge_2 = 0.812 \cdot in$ *(Edge Distance for Hole in Plate 2)*

$D = 0.5 \cdot in$ *(Diameter of Bolt)*

$D_shank = 0.497 \cdot in$ *(Min. Shank Diameter of Bolt)*

$D_hole = 0.531 \cdot in$ *(Diameter of Hole)*

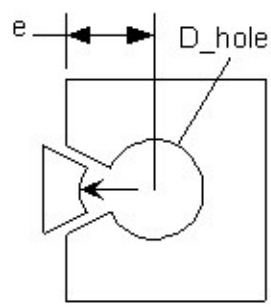

Typical shear tear-out failure

Shear area of the mating components ***(Ref. Analysis & Design of Flight Vehicle Structures, Bruhn, Pg. D1.5)***

$$A_{shrpl} := \overrightarrow{\left[2 \cdot tf \cdot \left(edge - \frac{1}{2} D_hole\right)\right]} \qquad \begin{pmatrix} Plate1 \\ Plate2 \end{pmatrix} \qquad A_{shrpl} = \begin{pmatrix} 0.155 \\ 0.82 \end{pmatrix} \cdot in^2$$

Allowables for plates that fastener goes through

$Fsu_1 := Tf1E \cdot 27 \cdot ksi$ $\quad Fsu_1 = 26.46 \cdot ksi$ *(Ultimate Shear Allowable for Plate 1)*

$Fsu_2 := Tf2E \cdot 43 \cdot ksi$ $\quad Fsu_2 = 42.14 \cdot ksi$ *(Ultimate Shear Allowable for Plate 2)*

$P_{su} := \overrightarrow{\left(A_{shrpl} \cdot Fsu\right)}$ $\quad P_{su} = \begin{pmatrix} 4112 \\ 34544 \end{pmatrix} \cdot lbf$ *(Shear Ultimate Allowable)*

MS for Shear Tear-Out

$$MS_{su} := \overrightarrow{\left(\frac{P_{su}}{V \cdot SFu \cdot FF} - 1\right)} \qquad \begin{pmatrix} \text{Plate1} \\ \text{Plate2} \end{pmatrix} \qquad MS_{su} = \begin{pmatrix} 4.01 \\ 41.07 \end{pmatrix}$$

$MS_{bh_1} := \min(MS_{su})$ $\quad MS_{bh_1} = 4.008$ ***... Shear Tear-Out MS***

Bearing Check

Recall bolt hole dimensions

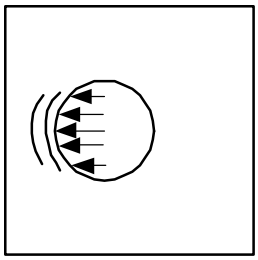

Typical Bearing Failure

$tf_1 = 0.38 \cdot in$ *(Thickness of Plate 1)*

$tf_2 = 0.75 \cdot in$ *(Thickness of Plate 2)*

$edge_1 = 0.47 \cdot in$ *(Edge Distance for thru Hole in Plate 1)*

$edge_2 = 0.812 \cdot in$ *(Edge Distance for tapped Hole in Plate 2)*

$$A_{br} := \overrightarrow{(tf \cdot \min(D, D_shank))} \qquad \begin{pmatrix} \text{Plate1} \\ \text{Plate2} \end{pmatrix} \qquad A_{br} = \begin{pmatrix} 0.189 \\ 0.373 \end{pmatrix} \cdot in^2$$ *(Bearing Areas)*

$$e_D := \frac{\overrightarrow{edge}}{D_hole} \qquad e_D = \begin{pmatrix} 0.885 \\ 1.529 \end{pmatrix}$$ *(e/D for Plates)*

Allowables for plates that fastener goes through

Bearing strength at e/D = 1.5

$Fbru15_1 := Tf1E \cdot 67ksi$ $\quad Fbru15_1 = 65.66 \cdot ksi$

$Fbry15_1 := Tf1E \cdot 50 \cdot ksi$ $\quad Fbry15_1 = 49 \cdot ksi$

$Fbru15_2 := Tf2E \cdot 107ksi$ $\quad Fbru15_2 = 104.86 \cdot ksi$

$Fbry15_2 := Tf2E \cdot 86 \cdot ksi$ $\quad Fbry15_2 = 84.28 \cdot ksi$

Bearing strength at e/D = 2.0

$Fbru20_1 := Tf1E \cdot 88ksi$ $\quad Fbru20_1 = 86.24 \cdot ksi$

$Fbry20_1 := Tf1E \cdot 58 \cdot ksi$ $\quad Fbry20_1 = 56.84 \cdot ksi$

$Fbru20_2 := Tf2E \cdot 140ksi$ $\quad Fbru20_2 = 137.2 \cdot ksi$

$Fbry20_2 := Tf2E \cdot 101 \cdot ksi$ $\quad Fbry20_2 = 98.98 \cdot ksi$

Modified bearing strength

$$Fbru_m_1 := if\left[e_D_1 > 2.0, Fbru20_1, if\left[(e_D_1 > 1.5)\cdot(e_D_1 < 2.0), Fbru15_1 + \frac{e_D_1 - 1.5}{2.0 - 1.5}\cdot(Fbru20_1 - Fbru15_1), \left[Fbru15_1\cdot(e_D_1 - 0.5)\right]\right]\right]$$

$$Fbru_m_2 := if\left[e_D_2 > 2.0, Fbru20_2, if\left[(e_D_2 > 1.5)\cdot(e_D_2 < 2.0), Fbru15_2 + \frac{e_D_2 - 1.5}{2.0 - 1.5}\cdot(Fbru20_2 - Fbru15_2), \left[Fbru15_2\cdot(e_D_2 - 0.5)\right]\right]\right]$$

$$Fbry_m_1 := if\left[e_D_1 > 2.0, Fbry20_1, if\left[(e_D_1 > 1.5)\cdot(e_D_1 < 2.0), Fbry15_1 + \frac{e_D_1 - 1.5}{2.0 - 1.5}\cdot(Fbry20_1 - Fbry15_1), \left[Fbry15_1\cdot(e_D_1 - 0.5)\right]\right]\right]$$

$$Fbry_m_2 := if\left[e_D_2 > 2.0, Fbry20_2, if\left[(e_D_2 > 1.5)\cdot(e_D_2 < 2.0), Fbry15_2 + \frac{e_D_2 - 1.5}{2.0 - 1.5}\cdot(Fbry20_2 - Fbry15_2), \left[Fbry15_2\cdot(e_D_2 - 0.5)\right]\right]\right]$$

$$Fbru_m = \begin{pmatrix} 25.287 \\ 106.748 \end{pmatrix} \begin{pmatrix} Plate1 \\ Plate2 \end{pmatrix}$$ *(Ultimate)*

$$Fbry_m = \begin{pmatrix} 18.871 \\ 85.138 \end{pmatrix} \begin{pmatrix} Plate1 \\ Plate2 \end{pmatrix}$$ *(Yield)*

$$P_{bru} := \overrightarrow{(A_{br}\cdot Fbru_m)} \qquad P_{bru} = \begin{pmatrix} 4776 \\ 39790 \end{pmatrix}\cdot lbf$$ *(Bearing Ultimate Allowable)*

$$P_{bry} := \overrightarrow{(A_{br}\cdot Fbry_m)} \qquad P_{bry} = \begin{pmatrix} 3564 \\ 31735 \end{pmatrix}\cdot lbf$$ *(Bearing Yield Allowable)*

MS for Bearing Failure

$$MS_{bru} := \overrightarrow{\left(\frac{P_{bru}}{V\cdot SFu\cdot FF} - 1\right)} \qquad MS_{bru} = \begin{pmatrix} 4.816 \\ 47.46 \end{pmatrix} \qquad \begin{pmatrix} Plate1 \\ Plate2 \end{pmatrix}$$

$$MS_{bh_2} := \min(MS_{bru}) \qquad MS_{bh_2} = 4.816$$ ***... Bearing MS based on Ultimate Strength***

$$MS_{bry} := \overrightarrow{\left(\frac{P_{bry}}{V \cdot SFy \cdot FF} - 1\right)} \qquad MS_{bry} = \begin{pmatrix} 5.94 \\ 60.84 \end{pmatrix} \qquad \begin{pmatrix} Plate1 \\ Plate2 \end{pmatrix}$$

$$MS_{bh_3} := \min(MS_{bry}) \qquad MS_{bh_3} = 5.945$$

... Bearing MS based on Yield Strength

Prepared By	Name Kent Peters	Date 08/21/2008	Engineering and Science Contract Group *Structural Analysis Section*	File Name DS TRD TabAngle to UVC
Checked By	C. Bala			Drawing No. SDG39137847
Title	Debris Shield Fastener Joint Analysis for Bolt/Washer with Insert TRD Side - Tab Angle Bracket to Upper Vacuum Case			

CHECK

Bolt := "SDG39135892-828, NAS1008-8A, .5000-20, .500 GRIP, CRES A286"

Washer := "NAS1587-8C"

Insert := "MS51831CA206, .500-20, CRES A286, 160 KSI"

Flange_1 := "Tab Angle Bracket"
Part_Number_1 := "SDG39137847"
Material_1 := "AL ALY 6061-T651 Sheet"

Flange_2 := "Upper Vacuum Case"
Part_Number_2 := "SDG39135727"
Material_2 := "AL ALY 7050-T7451"

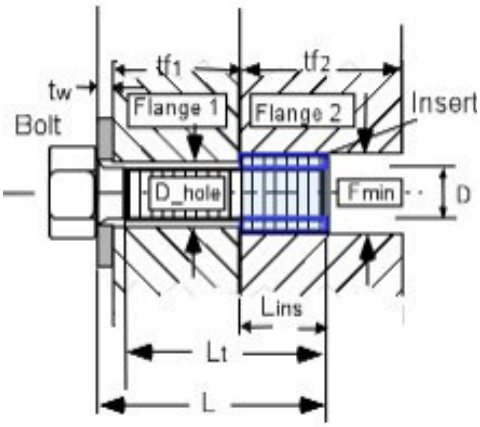

Loads

Applied tensile load $P := 201 \cdot lbf$

Applied shear load $V := 357 \cdot lbf$

Applied bending moment $M := 0 \cdot in \cdot lbf$

Factors of Safety

Ultimate $SFu := 2.0$ Yield $SFy := 1.25$

Joint Separation $SFsep := 1.2$ Fitting factor $FF := 1.15$

Temperature data

Assembly $Temp_initial := 70 \cdot deg$

Maximum $Temp_max := 140 \cdot deg$

Minimum $Temp_min := -76 \cdot deg$

Bolt and Insert Data

Nominal diameter of bolt $D := .5 \cdot in$

Number of threads/inch $Nt := 20 \cdot \frac{1}{in}$

Total length of bolt $L := 1.342 \cdot in$

Length of insert $Lins := .688 \cdot in$

Threaded length $Lt := .842 \cdot in$

Min. external diameter of insert $Fmin := .615 \cdot in$

(If bolt is fully threaded, input Lt = L)

Depth of recess for insert $lr := 0.02 \cdot in$

This file uses the calculations shown in \\escfil02\2i11_mathcad\8307_bolts\thread_data.mcd

Tue Feb 15 10:38:17 AM 2005

Washer Data

Thickness of washer $tw := .078 \cdot in$

Outer Diameter of washer $Dw := .875in$

Inner Diameter of washer $Dwi := .504 \cdot in$

Bolt head dia. across flats $dw := .741 \cdot in$ (used only if there is no washer)

Flange data

Thickness of flange 1 $tf1 := .38 \cdot in$

Thickness of flange 2 $tf2 := .75in$

Diameter of hole $D_hole := .531 \cdot in$

Note: If there is no washer, tw, Dw, and Dwi should be zero.

Material Property Data

Bolt

Temperature correction factor for bolt strength ultimate $TSu_bolt := .96$ yield $TSy_bolt := .96$

Bolt ultimate tensile allowable stress $Ftu_bolt := 140000 \cdot psi$

Bolt ultimate shear allowable stress $Fsu_bolt := 0.6 \cdot Ftu_bolt$

Bolt yield tensile allowable $Fty_bolt := 95000 \cdot psi$

Temperature correction factor for bolt modulus $TE_bolt := .98$

Modulus of elasticity of bolt $E_bolt := \left(29.1 \cdot 10^{6} \cdot psi\right)$

Thermal coefficient for bolt: $\beta_bolt_hot := 9.1 \cdot 10^{-6} \cdot \frac{\frac{in}{in}}{deg}$

$\beta_bolt_cold := 8.5 \cdot 10^{-6} \cdot \frac{\frac{in}{in}}{deg}$

Insert

Temperature correction factor for insert strength $TS_ins := .96$

Ultimate tensile allowable stress $Ftu_ins := 140000 \cdot psi$

Ultimate shear allowable stress $Fsu_ins := 0.6 \cdot Ftu_ins$

Washer

Temperature correction factor for washer modulus $TE_washer := 1.0$

Modulus of elasticity of washer $E_washer := \left(29.1 \cdot 10^{6} \cdot psi\right)$

Flanges

Stiffness of the joint depends upon number of members in the grip of the fasteners, Modulus of elasticity of these members, and diameters of the bolt and the washer.

Temperature correction factor for flange 1 $Tf1E := .98$ (modulus) $Tf2s := 0.91$ (strength)

Temperature correction factor for flange 2 $Tf2E := .98$ (modulus) $Fsu_f2 := 43000 \cdot psi$

Modulus of elasticity for the parts in the joint $E_flange1 := \left(10.1 \cdot 10^{6} \cdot psi\right)$ $E_flange2 := \left(10.8 \cdot 10^{6} \cdot psi\right)$

Coefficient of thermal expansion for flanges $\beta_flange1_hot := 12.8 \cdot 10^{-6} \cdot \frac{\frac{in}{in}}{deg}$ $\beta_flange2_hot := 12.5 \cdot 10^{-6} \cdot \frac{\frac{in}{in}}{deg}$

$\beta_flange1_cold := 12.1 \cdot 10^{-6} \cdot \frac{\frac{in}{in}}{deg}$ $\beta_flange2_cold := 12.1 \cdot 10^{-6} \cdot \frac{\frac{in}{in}}{deg}$

Torque/Preload data

Maximum torque $Tmax := 651 \cdot in \cdot lbf$

Loading plane factor: $n := 0.5$

Minimum torque $Tmin := 553 \cdot in \cdot lbf$

Preload Uncertainty: $u := 0.25$

Torque coefficient: $k := 0.15$

This file uses the calculations shown in \\escfil02\2i11_mathcad\8307_bolts\bolt_stiffness_insert_RevC

Bolt Load data

Bolt/joint stiffness factor	$= 0.646$	Preload due to temperature	$Pthr_pos = 586.1 \cdot lbf$
Max. preload	$PLDmax = 11436.1 \cdot lbf$		$Pthr_neg = -1255.6 \cdot lbf$
Min. preload	$PLDmin = 3731.9 \cdot lbf$	Uncertainty factor	$u = 0.25$
Joint separation load	$Psep = 241.2 \cdot lbf$	Torque coefficient	$k = 0.15$
Max. load on the bolt(ultimate)	$Pb = 11585.4 \cdot lbf$	Loading plane factor	$n = 0.5$
Max. load on the bolt(yield)	$Pby = 11529.4 \cdot lbf$	Thread shear pullout load of bolt or insert	$Pths = 51164.1 \cdot lbf$
Bolt ultimate tensile strength	$PAt = 21111.4 \cdot lbf$	Thread shear pullout load in parent metal	$Ppths = 26007.2 \cdot lbf$

Length_check = "Bolt length is sufficient"

Summary of Margins for bolt:

Joint separation	$MS_1 = 18.88$	Direct Thread shear Ultimate	$MS_6 = 55.26$
Direct Tension Ultimate	$MS_2 = 44.67$	Total Thread shear Ultimate	$MS_7 = 1.24$
Direct Tension Yield	$MS_3 = 48.58$	Shear Ultimate	$MS_8 = 13.6$
Total Tension Ultimate	$MS_4 = 0.82$	Bending Ultimate	$MS_9 = 10$
Total Tension Yield	$MS_5 = 0.243$	Combined shear, tension and bending ultimate	$MS_{10} = 0.82$

Determination of the smallest margin of safety for the bolt, and the failure mode:

$MSbolt := \min(MS)$

$MSbolt = 0.243$ Failure_Mode = "Total Tension Yield"

Fail-safe Analysis

Fail-safe Loads

Applied tensile load $P_FS := 240 \cdot lbf$

Applied shear load $V_FS := 666 \cdot lbf$

Applied bending moment $M_FS := 0 \cdot in \cdot lbf$

Fail-safe Factors of Safety

Ultimate $SFu_FS := 1.0$

Joint Separation $SFsep_FS := 1.0$

This file uses the calculations shown in \\escfil02\2i11_mathcad\8307_bolts\bolt_stiffness_insert_FS_RevC

Mon Feb 14 12:51:39 2005

Bolt Fail-safe Load data

Joint separation load $Psep_FS = 240 \cdot lbf$

Max. load on the bolt(ultimate) $Pb_FS = 11525.2 \cdot lbf$

Summary of fail-safe Margins for bolt:

Joint separation	$MS_FS_1 = 18.97$	Total Thread shear Ultimate	$MS_FS_5 = 1.26$
Direct Tension Ultimate	$MS_FS_2 = 75.49$	Shear Ultimate	$MS_FS_6 = 14.65$
Total Tension Ultimate	$MS_FS_3 = 0.83$	Bending Ultimate	$MS_FS_7 = 10$
Direct Thread shear Ultimate	$MS_FS_4 = 93.23$	Combined shear, tension and bending ultimate	$MS_FS_8 = 0.83$

Determination of the smallest fail-safe margin of safety for the bolt, and the failure mode:

$$MSbolt_FS := \min(MS_FS)$$

$MSbolt_FS = 0.83$ Failure_Mode_FS = "Combined Shear Tension Bending Ultimate"

Bolt Hole Analysis

Minimum edge distance of flange one $edge1 := 0.470 \cdot in$

Minimum edge distance of flange two $edge2 := 0.844 \cdot in$

Shank diameter of bolt $D_shank := .4970 \cdot in$

Recall loads from bolt calculation

Safety Factors	$SFu = 2.000$	*(Ultimate)*	$SFy = 1.25$	*(Yield)*
	$FF = 1.15$	*(Fitting Factor)*		
Input Loads	$V = 357 \cdot lbf$	*(Shear Load)*	$P = 201 \cdot lbf$	*(Axial Load)*
Bolt calc results	$Pb = 11585 \cdot lbf$	*(Max Bolt Load)*		
Dimensions	$L = 1.342 \cdot in$	*(Length of Bolt)*	$tw = 0.078 \cdot in$	*(Thickness of Washer)*

Shear Tear-Out Check

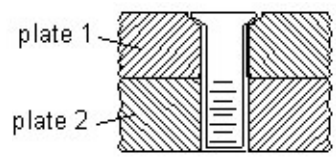

Recall bolt hole dimensions

$tf_1 := tf1$ $\quad tf_1 = 0.38 \cdot in$ *(Entire Thickness of Flange 1)* $\quad Tf1E = 0.98$

$tf_2 := tf2$ $\quad tf_2 = 0.75 \cdot in$ *(Entire Thickness of Flange 2)* $\quad Tf2E = 0.98$

$edge_1 := edge1$ $\quad edge_1 = 0.47 \cdot in$ *(Edge Distance for Hole in Plate 1)*

$edge_2 := edge2$ $\quad edge_2 = 0.844 \cdot in$ *(Edge Distance for Hole in Plate 2)*

$D = 0.5 \cdot in$ *(Diameter of Bolt)*

$D_shank = 0.497 \cdot in$ *(Min. Shank Diameter of Bolt)*

$D_hole = 0.531 \cdot in$ *(Diameter of Hole)*

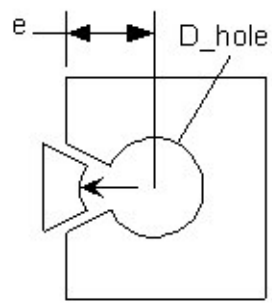

Typical shear tear-out failure

Shear area of the mating components ***(Ref. Analysis & Design of Flight Vehicle Structures, Bruhn, Pg. D1.5)***

$$A_{shrpl} := \overrightarrow{\left[2 \cdot tf \cdot \left(edge - \frac{1}{2} D_hole\right)\right]} \qquad \begin{pmatrix} Plate1 \\ Plate2 \end{pmatrix} \qquad A_{shrpl} = \begin{pmatrix} 0.155 \\ 0.868 \end{pmatrix} \cdot in^2$$

Allowables for plates that fastener goes through

$Fsu_1 := Tf1E \cdot 27 \cdot ksi$ $\quad Fsu_1 = 26.46 \cdot ksi$ *(Ultimate Shear Allowable for Plate 1)*

$Fsu_2 := Tf2E \cdot 43 \cdot ksi$ $\quad Fsu_2 = 42.14 \cdot ksi$ *(Ultimate Shear Allowable for Plate 2)*

$P_{su} := \overrightarrow{(A_{shrpl} \cdot Fsu)}$ $\quad P_{su} = \begin{pmatrix} 4112 \\ 36567 \end{pmatrix} \cdot lbf$ *(Shear Ultimate Allowable)*

MS for Shear Tear-Out

$$MS_{su} := \overrightarrow{\left(\frac{P_{su}}{V \cdot SFu \cdot FF} - 1\right)} \qquad \begin{pmatrix} \text{Plate1} \\ \text{Plate2} \end{pmatrix} \qquad MS_{su} = \begin{pmatrix} 4.01 \\ 43.53 \end{pmatrix}$$

$$MS_{bh_1} := \min(MS_{su}) \qquad MS_{bh_1} = 4.008$$

... Shear Tear-Out MS

Bearing Check

Recall bolt hole dimensions

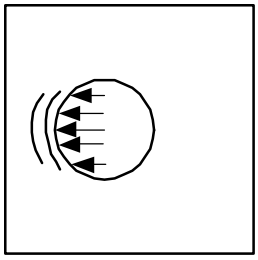

Typical Bearing Failure

$tf_1 = 0.38 \cdot in$ *(Thickness of Plate 1)*

$tf_2 = 0.75 \cdot in$ *(Thickness of Plate 2)*

$edge_1 = 0.47 \cdot in$ *(Edge Distance for thru Hole in Plate 1)*

$edge_2 = 0.844 \cdot in$ *(Edge Distance for tapped Hole in Plate 2)*

$$A_{br} := \overrightarrow{(tf \cdot \min(D, D_shank))} \qquad \begin{pmatrix} \text{Plate1} \\ \text{Plate2} \end{pmatrix} \qquad A_{br} = \begin{pmatrix} 0.189 \\ 0.373 \end{pmatrix} \cdot in^2$$

(Bearing Areas)

$$e_D := \overrightarrow{\frac{edge}{D_hole}} \qquad e_D = \begin{pmatrix} 0.885 \\ 1.589 \end{pmatrix}$$

(e/D for Plates)

Allowables for plates that fastener goes through

Bearing strength at e/D = 1.5

$Fbru15_1 := Tf1E \cdot 67ksi$ $\quad Fbru15_1 = 65.66 \cdot ksi$

$Fbry15_1 := Tf1E \cdot 50 \cdot ksi$ $\quad Fbry15_1 = 49 \cdot ksi$

$Fbru15_2 := Tf2E \cdot 107ksi$ $\quad Fbru15_2 = 104.86 \cdot ksi$

$Fbry15_2 := Tf2E \cdot 86 \cdot ksi$ $\quad Fbry15_2 = 84.28 \cdot ksi$

Bearing strength at e/D = 2.0

$Fbru20_1 := Tf1E \cdot 88ksi$ $\quad Fbru20_1 = 86.24 \cdot ksi$

$Fbry20_1 := Tf1E \cdot 58 \cdot ksi$ $\quad Fbry20_1 = 56.84 \cdot ksi$

$Fbru20_2 := Tf2E \cdot 140ksi$ $\quad Fbru20_2 = 137.2 \cdot ksi$

$Fbry20_2 := Tf2E \cdot 101 \cdot ksi$ $\quad Fbry20_2 = 98.98 \cdot ksi$

Modified bearing strength

$$Fbru_m_1 := if\left[e_D_1 > 2.0, Fbru20_1, if\left[(e_D_1 > 1.5)\cdot(e_D_1 < 2.0), Fbru15_1 + \frac{e_D_1 - 1.5}{2.0 - 1.5}\cdot(Fbru20_1 - Fbru15_1), \left[Fbru15_1\cdot(e_D_1 - 0.5)\right]\right]\right]$$

$$Fbru_m_2 := if\left[e_D_2 > 2.0, Fbru20_2, if\left[(e_D_2 > 1.5)\cdot(e_D_2 < 2.0), Fbru15_2 + \frac{e_D_2 - 1.5}{2.0 - 1.5}\cdot(Fbru20_2 - Fbru15_2), \left[Fbru15_2\cdot(e_D_2 - 0.5)\right]\right]\right]$$

$$Fbry_m_1 := if\left[e_D_1 > 2.0, Fbry20_1, if\left[(e_D_1 > 1.5)\cdot(e_D_1 < 2.0), Fbry15_1 + \frac{e_D_1 - 1.5}{2.0 - 1.5}\cdot(Fbry20_1 - Fbry15_1), \left[Fbry15_1\cdot(e_D_1 - 0.5)\right]\right]\right]$$

$$Fbry_m_2 := if\left[e_D_2 > 2.0, Fbry20_2, if\left[(e_D_2 > 1.5)\cdot(e_D_2 < 2.0), Fbry15_2 + \frac{e_D_2 - 1.5}{2.0 - 1.5}\cdot(Fbry20_2 - Fbry15_2), \left[Fbry15_2\cdot(e_D_2 - 0.5)\right]\right]\right]$$

$$Fbru_m = \begin{pmatrix} 25.287 \\ 110.646 \end{pmatrix} \begin{pmatrix} Plate1 \\ Plate2 \end{pmatrix}$$ *(Ultimate)*

$$Fbry_m = \begin{pmatrix} 18.871 \\ 86.91 \end{pmatrix} \begin{pmatrix} Plate1 \\ Plate2 \end{pmatrix}$$ *(Yield)*

$$P_{bru} := \overrightarrow{(A_{br}\cdot Fbru_m)} \qquad P_{bru} = \begin{pmatrix} 4776 \\ 41243 \end{pmatrix}\cdot lbf$$ *(Bearing Ultimate Allowable)*

$$P_{bry} := \overrightarrow{(A_{br}\cdot Fbry_m)} \qquad P_{bry} = \begin{pmatrix} 3564 \\ 32396 \end{pmatrix}\cdot lbf$$ *(Bearing Yield Allowable)*

MS for Bearing Failure

$$MS_{bru} := \overrightarrow{\left(\frac{P_{bru}}{V\cdot SFu\cdot FF} - 1\right)} \qquad MS_{bru} = \begin{pmatrix} 4.816 \\ 49.229 \end{pmatrix} \qquad \begin{pmatrix} Plate1 \\ Plate2 \end{pmatrix}$$

$$MS_{bh_2} := \min(MS_{bru}) \qquad MS_{bh_2} = 4.816$$ ***... Bearing MS based on Ultimate Strength***

$$MS_{bry} := \overrightarrow{\left(\frac{P_{bry}}{V \cdot SFy \cdot FF} - 1\right)} \qquad MS_{bry} = \begin{pmatrix} 5.94 \\ 62.13 \end{pmatrix} \qquad \begin{pmatrix} Plate1 \\ Plate2 \end{pmatrix}$$

$$MS_{bh_3} := \min(MS_{bry}) \qquad MS_{bh_3} = 5.945$$

... Bearing MS based on Yield Strength

Prepared By	Name: Kent Peters	Date: 08/21/2008	Engineering and Science Contract Group *Structural Analysis Section*	File Name: DS TRD 2.70in Bathtub to LTBB
Checked By	C. Bala			Drawing No.: SDG39137848-002
Title	Debris Shield Fastener Joint Analysis for Bolt/Washer with Nut/Washer TRD Side - 2.70in Bathtub Bracket to Lower Trunnion Bridge Beam			

CHECK

Note: Figure is for reference only.
Not to scale. Actual joint made differ.
Washer may be on nut side, head side, or both

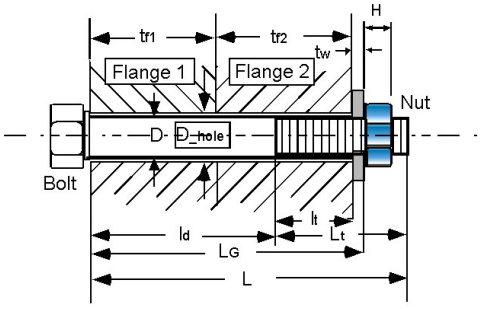

Bolt := **"NAS1351N4-12, .2500-28, 0.750 L, A-286, Heat Resistant Steel"**

Washer := **"NAS1149E0463R, .250 Nom Dia, 0.063 T, A-286, Passivate"**

Nut := **"NAS1291-C4M, .2500-28 UNJF-3B"**

Flange_1 := **"2.70in Bathtub Bracket"**
Part_Number_1 := **"SDG39137848-002"**
Material_1 := **"AL ALY 6061-T651"**

Minimum edge distance of flange one: edge1 := **.347**·in

Flange_2 := **"Lower Trunnion Bridge Beam"**
Part_Number_2 := **"SDG39135735"**
Material_2 := **"AL ALY 7050-T7451"**

Minimum edge distance of flange two: edge2 := **.375**·in

Loads (reference)

Applied tensile load: P := **201**.lbf

Applied shear load: V := **357**.lbf

Applied bending moment: M := **0**in·lbf

(Worst case combination)

Factors of Safety (reference)

SFu := **2.00** *(Ultimate)*

SFy := **1.25** *(Yield)*

FF := **1.15** *(Fitting factor)*

SFsep := **1.20** *(Joint Separation)*

Temperature data (reference)

Assembly: Temp_initial := **70**·deg

Temp_max := **140**·deg *(Maximum)*

Temp_min := **–76**·deg *(Minimum)*

Note: these are maximum temperatures that hardware sees / if maximum load occurs at a different temperature this will be conservative

Bolt Data (Bolt = **"NAS1351N4-12, .2500-28, 0.750 L, A-286, Heat Resistant Steel"**)

Nominal diameter of bolt: D := **.2500**·in

Number of threads/inch: Nt := **28**·$\frac{1}{in}$

Shank diameter of bolt: D_shank := **.2435**·in

Note: if there is a retainer groove in the fastener, this should be the calculated diameter to give an equivalent cross sectional area

Total length of bolt: L := **.75**·in

Threaded length: Lt := **.75**·in *(If bolt is fully threaded, input Lt = L)*

Bolt head dia. across flats: dw := **.365**·in *(dia of pressure boss if it exists, otherwise dia of head)*

Bolt head height: bh := **.244**·in *(head height is 0 if bolt is flat head)*

Bolt Data cont. (Bolt = **"NAS1351N4-12, .2500-28, 0.750 L, A-286, Heat Resistant Steel"** **)**

Fri Apr 27 14:15:35 2007

Thread data lookup table is hidden
This file uses the data shown in \\escfil02\2i11_mathcad\8307_bolts\Rev_D\thread_data.mcd

Temperature correction factor for bolt strength: $TSu_bolt := .96$ $TSy_bolt := .96$ *(MMPDS-03, Fig. 6.2.1.1.1.)*

Bolt ultimate tensile allowable stress: $Ftu_bolt := 160000 \cdot psi$ $Fty_bolt := 120000 \cdot psi$

Bolt ultimate shear allowable stress: $Fsu_bolt := 0.6 \cdot Ftu_bolt$

Temperature correction factor for bolt modulus: $TE_bolt := .98$ *(MMPDS-03, Fig. 6.2.1.1.4(a).)*

Modulus of elasticity of bolt: $E_bolt := \left(29.1 \cdot 10^{6} \cdot psi\right)$ *(MMPDS-03, Fig. 6.2.1.0(b).)*

Thermal coefficients for bolt

$$\beta_bolt_hot := 9.1 \cdot 10^{-6} \cdot \frac{\frac{in}{in}}{deg} \qquad \beta_bolt_cold := 8.5 \cdot 10^{-6} \cdot \frac{\frac{in}{in}}{deg}$$

(MMPDS-03, Fig. 6.2.1.0.)

Washer Data (Washer = **"NAS1149E0463R, .250 Nom Dia, 0.063 T, A-286, Passivate"** **)**

Thickness of washers:

head: $twh := .063 \cdot in$

nut: $twn := .063 \cdot in$

(these are total washer thickness, if there are more than one)

Diameter of washer under head:

Outer: $Dwoh := .500 in$

Inner: $Dwih := .265 \cdot in$

Diameter of washer under nut:

Outer: $Dwon := .500 in$

Inner: $Dwin := .265 \cdot in$

Note: If there is no washer - tw's, Dwo's and Dwi's should be zero

Modulus of elasticity:

head: $E_washerh := \left(29.1 \cdot 10^{6} \cdot psi\right)$

nut: $E_washern := \left(29.1 \cdot 10^{6} \cdot psi\right)$

Temperature correction factor for modulus:

head: $TE_washerh := .98$

nut: $TE_washern := .98$

(same as bolt)

Nut Data (Nut = **"NAS1291-C4M, .2500-28 UNJF-3B"** **)**

Height of nut: $H := .204 \cdot in$

Nut dia. across flats: $Dn := .386 \cdot in$

Temperature correction factor for nut strength: $TS_nut := .96$ *(same as bolt)*

Ultimate allowable stress, tensile: $Ftu_nut := 125000 \cdot psi$ $Fsu_nut := 0.6 \cdot Ftu_nut$ *(Shear)*

Ultimate axial strength of nut: $Ptu_nut := 4530 \cdot lbf$

Prepared By	Name Kent Peters	Date 08/21/2008	Engineering and Science Contract Group *Structural Analysis Section*	File Name DS TRD 2.70in Bathtub to LTBB
Checked By	C. Bala			Draw ing No. SDG39137848-002
Title	Debris Shield Fastener Joint Analysis for Bolt/Washer with Nut/Washer TRD Side - 2.70in Bathtub Bracket to Lower Trunnion Bridge Beam			

Flange data (Stiffness of the joint depends upon number of members in the grip of the fasteners & their material properties)

Diameter of thru hole $D_hole := .272 \cdot in$

Flange_1 = **"2.70in Bathtub Bracket"**

Flange_2 = **"Lower Trunnion Bridge Beam"**

Material_1 = **"AL ALY 6061-T651"**

Material_2 = **"AL ALY 7050-T7451"**

Thickness of flanges $tf1 := .100 \cdot in$

$tf2 := .250 in$

Compressive Modulus of elastici $E_flange1 := \left(10.1 \cdot 10^{6} \cdot psi\right)$

$E_flange2 := \left(10.6 \cdot 10^{6} \cdot psi\right)$

Temperature correction factor (modul $Tf1E := .98$

$Tf2E := .98$

Coefficient of thermal expansion for flanges

$\beta_flange1_hot := 12.8 \cdot 10^{-6} \cdot \frac{\frac{in}{in}}{deg}$

$\beta_flange2_hot := 12.5 \cdot 10^{-6} \cdot \frac{\frac{in}{in}}{deg}$

$\beta_flange1_cold := 12.1 \cdot 10^{-6} \cdot \frac{\frac{in}{in}}{deg}$

$\beta_flange2_cold := 12.1 \cdot 10^{-6} \cdot \frac{\frac{in}{in}}{deg}$

Used Tf2E and alpha values for 7075 because no values were available for 7050

Torque/Preload data

Maximum torque $Tmax := 103.2 \cdot in \cdot lbf$

(Shigley's "Mechanical Engineering Design")

Minimum torque $Tmin := 87.7 in \cdot lbf$

Joint is lubed/dry

Preload Uncertainty $u := 0.25$ *(0.25 lubed/0.35 dry)*

Torque coefficient $k := 0.15$ *(0.15 lubed/0.20 dry)*

Loading plane factor $n := 0.5$

Stiffness and Margin calculations are
This file uses the calculations shown in \\escfil02\2i11_mathcad\8307_bolts\Rev_D\bolt_stiffness_nut.mcd

Fri Apr 27 14:15:49 2007

Bolt Load data

Bolt/joint stiffness factor = **0.348**

Max. preload PLDmax = **3524** lbf

Min. preload PLDmin = **1402** lbf

Nom. preload PLDnom = **2752** lbf

Preload to yield ratio (nom.) PLDratio = **0.677**

Joint separation load Psep = **241.200** lbf

Preload due to temperature Pthr_pos = **83.5** lbf

Pthr_neg = **−180** lbf

Uncertainty factor u = **0.250**

Torque coefficient k = **0.150**

Loading plane factor n = **0.500**

Bolt Load data (cont.)

Applied Tensile load on the bolt P = **201.000** lbf

Applied shear on the bolt V = **357.000** lbf

Applied bending on the bolt M = **0.000** in·lbf

Max. load on the bolt with preload and Factor of safety

Pb = **3604** lbf *(ultimate)*

Pby = **3574** lbf *(yield)*

Max. load on the bolt with preload WithOut factor of safety

Pbapp = **3564** lbf

Bolt ultimate tensile strength PAt = **5419** lbf

Thread pullout strength PAs = **4349** lbf

Nut ultimate tensile strength Ptu_nut = **4349** lbf

Bolt shear strength VAu = **3001** lbf

Bolt bending strength MAu = **150** in·lbf

General Checks

length_check = **"Bolt length should be increased! nut is fully threaded, but does not extend past nut"**

cone_check = **"Joint pressure cone does not extend pass flange edge"**

preload_check = **"Nominal preload >= 65% of bolt yield strength"**

washer_check = **"Washers under head and nut do not extend past flanges"**

Summary of Margins for bolt:

Joint separation	MS_1 = **5.12**	Direct Thread shear Ultimate	MS_6 = **8.41**
Direct Tension Ultimate	MS_2 = **10.72**	Total Thread shear Ultimate	MS_7 = **0.21**
Direct Tension Yield	MS_3 = **13.07**	Shear Ultimate	MS_8 = **2.65**
Total Tension Ultimate	MS_4 = **0.5**	Bending Ultimate	MS_9 = **100**
Total Tension Yield	MS_5 = **0.14**	Combined shear, tension and bending ultimate	MS_{10} = **0.46**

Smallest margin of safety for the bolt, and the failure mode:

MSbolt = **0.14** Failure_Mode = **"Total Tension Yield"**

Prepared By	Name	Date	Engineering and Science Contract Group	File Name
	Kent Peters	08/21/2008		DS TRD 2.70in Bathtub to LTBB
Checked By	C. Bala		*Structural Analysis Section*	Draw ing No. SDG39137848-002
Title	Debris Shield Fastener Joint Analysis for Bolt/Washer with Nut/Washer TRD Side - 2.70in Bathtub Bracket to Lower Trunnion Bridge Beam			

Fail-safe Analysis

Fail-safe Loads

Applied tensile load $P_FS := 240 \cdot lbf$

Applied shear load $V_FS := 666 \cdot lbf$

Applied bending moment $M_FS := 0 \cdot in \cdot lbf$

Fail-safe Factors of Safety

Ultimate $SFu_FS := 1.0$

Joint Separation $SFsep_FS := 1.0$

Fail Safe Margin calculations are hidden / stiffness & allowable data is not recalculated
This file uses the calculations shown in \\escfil02\2i11_mathcad\8307_bolts\Rev_D\bolt_stiffness_nut_FS.mcd

Fri Apr 27 14:16:05 2007

Bolt Fail-safe Load data

Joint separation load $Psep_FS = 240.000\ lbf$

Max. load on the bolt(ultimate) $Pb_FS = 3571.6\ lbf$

Summary of fail-safe Margins for bolt:

Joint separation $MS_FS_1 = 5.15$

Direct Tension Ultimate $MS_FS_2 = 18.64$

Total Tension Ultimate $MS_FS_3 = 0.52$

Direct Thread shear Ultimate $MS_FS_4 = 14.76$

Total Thread shear Ultimate $MS_FS_5 = 0.22$

Shear Ultimate $MS_FS_6 = 2.92$

Bending Ultimate $MS_FS_7 = 10$

Combined shear, tension and bending ultimate $MS_FS_8 = 0.48$

Determination of the smallest fail-safe margin of safety for the bolt, and the failure mode:

$MSbolt_FS = 0.22$ $Failure_Mode_FS =$ **"Total Thread Shear Ultimate (Nut)"**

Prepared By	Name Kent Peters	Date 08/21/2008	Engineering and Science Contract Group *Structural Analysis Section*	File Name DS TRD 2.70in Bathtub to LTBB
Checked By	C. Bala			Draw ing No. SDG39137848-002
Title	Debris Shield Fastener Joint Analysis for Bolt/Washer with Nut/Washer TRD Side - 2.70in Bathtub Bracket to Lower Trunnion Bridge Beam			

Bolt Hole Analysis

Recall loads from bolt calculation

Safety Factors	SFu = **2.000**	*(Ultimate)*	SFy = **1.250**	*(Yield)*
	FF = **1.150**	*(Fitting Factor)*		
Input Loads	V = **357** lbf	*(Shear Load)*	P = **201.000** lbf	*(Axial Load)*
Bolt calc results	Pb = **3604** lbf	*(Max Bolt Load)*		
Dimensions	L = **0.750** in	*(Length of Bolt)*	twh = **0.063** in	*(Thickness of Washer)*

Shear Tear-Out Check

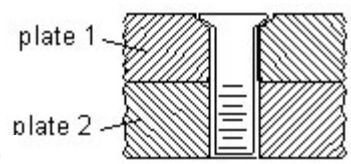

Recall bolt hole dimensions

$tf_1 := tf1$ $\quad tf_1 = \mathbf{0.100}\,in$ *(Entire Thickness of Flange 1)* $\quad Tf1E = \mathbf{0.980}$

$tf_2 := tf2$ $\quad tf_2 = \mathbf{0.250}\,in$ *(Entire Thickness of Flange 2)* $\quad Tf2E = \mathbf{0.980}$

$edge_1 := edge1$ $\quad edge_1 = \mathbf{0.347}\,in$ *(Edge Distance for Hole in Plate 1)*

$edge_2 := edge2$ $\quad edge_2 = \mathbf{0.375}\,in$ *(Edge Distance for Hole in Plate 2)*

$D = \mathbf{0.250}\,in$ *(Diameter of Bolt)*

$D_shank = \mathbf{0.244}\,in$ *(Min. Shank Diameter of Bolt)*

$D_hole = \mathbf{0.272}\,in$ *(Diameter of Hole)*

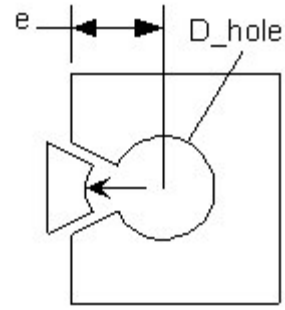

Typical shear tear-out failure

Shear area of the mating components (Ref. Analysis & Design of Flight Vehicle Structures, Bruhn, Pg. D1.5)

$$A_{shrpl} := \overrightarrow{\left[2 \cdot tf \cdot \left(edge - \frac{1}{2} D_hole\right)\right]} \qquad \begin{pmatrix} Plate1 \\ Plate2 \end{pmatrix} \qquad A_{shrpl} = \begin{pmatrix} \mathbf{0.042} \\ \mathbf{0.119} \end{pmatrix} in^2$$

Allowables for plates that fastener goes through

$Fsu_1 := Tf1E \cdot \mathbf{27} \cdot ksi$ $\quad Fsu_1 = \mathbf{26.460}\,ksi$ *(Ultimate Shear Allowable for Plate 1)*

$Fsu_2 := Tf2E \cdot \mathbf{43} \cdot ksi$ $\quad Fsu_2 = \mathbf{42.140}\,ksi$ *(Ultimate Shear Allowable for Plate 2)*

$$P_{su} := \overrightarrow{\left(A_{shrpl} \cdot Fsu\right)} \qquad P_{su} = \begin{pmatrix} \mathbf{1117} \\ \mathbf{5036} \end{pmatrix} lbf$$ *(Shear Ultimate Allowable)*

MS for Shear Tear-Out

$$MS_{su} := \overrightarrow{\left(\frac{P_{su}}{V \cdot SFu \cdot FF} - \mathbf{1}\right)} \qquad \begin{pmatrix} Plate1 \\ Plate2 \end{pmatrix} \qquad MS_{su} = \begin{pmatrix} \mathbf{0.36} \\ \mathbf{5.13} \end{pmatrix}$$

$MS_{bh_1} := \min(MS_{su})$

$MS_{bh_1} = \mathbf{0.36}$ ***... Shear Tear-Out MS***

Bearing Check

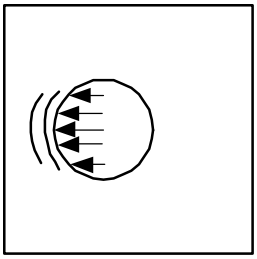

Typical Bearing Failure

Recall bolt hole dimensions

$tf_1 = \mathbf{0.100}\,in$ *(Thickness of Plate 1)*

$tf_2 = \mathbf{0.250}\,in$ *(Thickness of Plate 2)*

$edge_1 = \mathbf{0.347}\,in$ *(Edge Distance for thru Hole in Plate 1)*

$edge_2 = \mathbf{0.375}\,in$ *(Edge Distance for tapped Hole in Plate 2)*

$A_{br} := \overrightarrow{(tf \cdot \min(D, D_shank))}$ $\begin{pmatrix} \text{Plate1} \\ \text{Plate2} \end{pmatrix}$ $A_{br} = \begin{pmatrix} \mathbf{0.024} \\ \mathbf{0.061} \end{pmatrix} in^2$ *(Bearing Areas)*

$e_D := \overrightarrow{\dfrac{edge}{D_hole}}$ $e_D = \begin{pmatrix} \mathbf{1.276} \\ \mathbf{1.379} \end{pmatrix}$ *(e/D for Plates)*

Allowables for plates that fastener goes through

Bearing strength at e/D = 1.5

$Fbru15_1 := Tf1E \cdot \mathbf{67}ksi$ $Fbru15_1 = \mathbf{65.66}\,ksi$

$Fbry15_1 := Tf1E \cdot \mathbf{50} \cdot ksi$ $Fbry15_1 = \mathbf{49}\,ksi$

$Fbru15_2 := Tf2E \cdot \mathbf{107}ksi$ $Fbru15_2 = \mathbf{104.86}\,ksi$

$Fbry15_2 := Tf2E \cdot \mathbf{86} \cdot ksi$ $Fbry15_2 = \mathbf{84.28}\,ksi$

Bearing strength at e/D = 2.0

$Fbru20_1 := Tf1E \cdot \mathbf{88}ksi$ $Fbru20_1 = \mathbf{86.24}\,ksi$

$Fbry20_1 := Tf1E \cdot \mathbf{58} \cdot ksi$ $Fbry20_1 = \mathbf{56.840}\,ksi$

$Fbru20_2 := Tf2E \cdot \mathbf{140}ksi$ $Fbru20_2 = \mathbf{137.2}\,ksi$

$Fbry20_2 := Tf2E \cdot \mathbf{101} \cdot ksi$ $Fbry20_2 = \mathbf{98.980}\,ksi$

Modified bearing strength

$$Fbru_m_1 := if\left[e_D_1 > \mathbf{2.0}, Fbru20_1, if\left[(e_D_1 > \mathbf{1.5}) \cdot (e_D_1 < \mathbf{2.0}), Fbru15_1 + \frac{e_D_1 - \mathbf{1.5}}{\mathbf{2.0} - \mathbf{1.5}} \cdot (Fbru20_1 - Fbru15_1), \left[Fbru15_1 \cdot (e_D_1 - \mathbf{0.5})\right]\right]\right]$$

$$Fbru_m_2 := if\left[e_D_2 > \mathbf{2.0}, Fbru20_2, if\left[(e_D_2 > \mathbf{1.5}) \cdot (e_D_2 < \mathbf{2.0}), Fbru15_2 + \frac{e_D_2 - \mathbf{1.5}}{\mathbf{2.0} - \mathbf{1.5}} \cdot (Fbru20_2 - Fbru15_2), \left[Fbru15_2 \cdot (e_D_2 - \mathbf{0.5})\right]\right]\right]$$

$$Fbry_m_1 := if\left[e_D_1 > \mathbf{2.0}, Fbry20_1, if\left[(e_D_1 > \mathbf{1.5}) \cdot (e_D_1 < \mathbf{2.0}), Fbry15_1 + \frac{e_D_1 - \mathbf{1.5}}{\mathbf{2.0} - \mathbf{1.5}} \cdot (Fbry20_1 - Fbry15_1), \left[Fbry15_1 \cdot (e_D_1 - \mathbf{0.5})\right]\right]\right]$$

$$Fbry_m_2 := if\left[e_D_2 > \mathbf{2.0}, Fbry20_2, if\left[(e_D_2 > \mathbf{1.5}) \cdot (e_D_2 < \mathbf{2.0}), Fbry15_2 + \frac{e_D_2 - \mathbf{1.5}}{\mathbf{2.0} - \mathbf{1.5}} \cdot (Fbry20_2 - Fbry15_2), \left[Fbry15_2 \cdot (e_D_2 - \mathbf{0.5})\right]\right]\right]$$

$Fbru_m = \begin{pmatrix} \mathbf{50.935} \\ \mathbf{92.138} \end{pmatrix} \begin{pmatrix} \text{Plate1} \\ \text{Plate2} \end{pmatrix}$ *(Ultimate)*

$Fbry_m = \begin{pmatrix} \mathbf{38.011} \\ \mathbf{74.055} \end{pmatrix} \begin{pmatrix} \text{Plate1} \\ \text{Plate2} \end{pmatrix}$ *(Yield)*

$P_{bru} := \overrightarrow{(A_{br} \cdot Fbru_m)}$ $\quad P_{bru} = \begin{pmatrix} 1240 \\ 5609 \end{pmatrix} lbf$ *(Bearing Ultimate Allowable)*

$P_{bry} := \overrightarrow{(A_{br} \cdot Fbry_m)}$ $\quad P_{bry} = \begin{pmatrix} 926 \\ 4508 \end{pmatrix} lbf$ *(Bearing Yield Allowable)*

MS for Bearing Failure

$\mathbf{MS_{bru}} := \overrightarrow{\left(\frac{P_{bru}}{V \cdot SFu \cdot FF} - 1\right)}$ $\quad \mathbf{MS_{bru}} = \begin{pmatrix} 0.510 \\ 5.831 \end{pmatrix}$ $\begin{pmatrix} \text{Plate1} \\ \text{Plate2} \end{pmatrix}$

$MS_{bh_2} := \min(\mathbf{MS_{bru}})$

$MS_{bh_2} = 0.51$ ***... Bearing MS based on Ultimate Strength***

$MS_{bry} := \overrightarrow{\left(\frac{P_{bry}}{V \cdot SFy \cdot FF} - 1\right)}$ $\quad MS_{bry} = \begin{pmatrix} 0.8 \\ 7.78 \end{pmatrix}$ $\begin{pmatrix} \text{Plate1} \\ \text{Plate2} \end{pmatrix}$

$MS_{bh_3} := \min(MS_{bry})$

$MS_{bh_3} = 0.804$ ***... Bearing MS based on Yield Strength***

Prepared By	Name Kent Peters	Date 08/21/2008	Engineering and Science Contract Group *Structural Analysis Section*	File Name DS TRD RightAngle to SillJA
Checked By	C. Bala			Draw ing No. SDG39137848-003
Title	Debris Shield Fastener Joint Analysis for Bolt/Washer with Nut/Washer TRD Side - Right Angle to Sill Joint Assy			

CHECK

Note: Figure is for reference only.
Not to scale. Actual joint made differ.
Washer may be on nut side, head side, or both

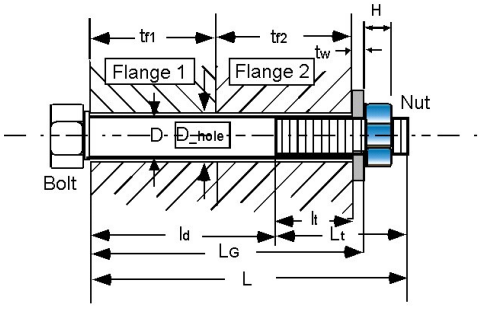

Bolt := **"NAS1351N4-18, .2500-28, 1.125 L, A-286, Heat Resistant Steel"**

Washer := **"NAS1149E0463R, .250 Nom Dia, 0.063 T, A-286, Passivate"**

Nut := **"NAS1291-C4M, .2500-28 UNJF-3B"**

Flange_1 := **"Right Angle Bracket"**
Part_Number_1 := **"SDG39137848-003"**
Material_1 := **"AL ALY 6061-T651"**

Minimum edge distance of flange one — edge1 := **.375**·in

Flange_2 := **"Sill Joint Assy"**
Part_Number_2 := **"SDG39135730"**
Material_2 := **"AL ALY 7050-T7451"**

Minimum edge distance of flange two — edge2 := **.380**·in

Loads (reference)

Applied tensile load — P := **201.**lbf

Applied shear load — V := **357.**lbf

Applied bending moment — M := **0**in·lbf

(Worst case combination)

Factors of Safety (reference)

SFu := **2.00** *(Ultimate)*

SFy := **1.25** *(Yield)*

FF := **1.15** *(Fitting factor)*

SFsep := **1.20** *(Joint Separation)*

Temperature data (reference)

Assembly — Temp_initial := **70**·deg

Temp_max := **140**·deg *(Maximum)*

Temp_min := **–76**·deg *(Minimum)*

Note: these are maximum temperatures that hardware sees / if maximum load occurs at a different temperature this will be conservative

Bolt Data (Bolt = **"NAS1351N4-18, .2500-28, 1.125 L, A-286, Heat Resistant Steel"**)

Nominal diameter of bolt — D := **.2500**·in

Number of threads/inch — Nt := **28**·$\frac{1}{in}$

Shank diameter of bolt — D_shank := **.2435**·in

Note: if there is a retainer groove in the fastener, this should be the calculated diameter to give an equivalent cross sectional area

Total length of bolt — L := **1.125**·in

Threaded length — Lt := **1.000**·in *(If bolt is fully threaded, input Lt = L)*

Bolt head dia. across flats — dw := **.365**·in *(dia of pressure boss if it exists, otherwise dia of head)*

Bolt head height — bh := **.244**·in *(head height is 0 if bolt is flat head)*

Bolt Data cont. (Bolt = **"NAS1351N4-18, .2500-28, 1.125 L, A-286, Heat Resistant Steel"** **)**

Fri Apr 27 14:15:35 2007

Thread data lookup table is hidden

This file uses the data shown in \\escfil02\2i11_mathcad\8307_bolts\Rev_D\thread_data.mcd

Temperature correction factor for bolt strength $TSu_bolt := \mathbf{.96}$ $TSy_bolt := \mathbf{.96}$ *(MMPDS-03, Fig. 6.2.1.1.1.)*

Bolt ultimate tensile allowable stress $Ftu_bolt := \mathbf{160000} \cdot psi$ $Fty_bolt := \mathbf{120000} \cdot psi$

Bolt ultimate shear allowable stress $Fsu_bolt := \mathbf{0.6} \cdot Ftu_bolt$

Temperature correction factor for bolt modulus $TE_bolt := \mathbf{.98}$ *(MMPDS-03, Fig. 6.2.1.1.4(a).)*

Modulus of elasticity of bolt $E_bolt := \left(\mathbf{29.1} \cdot \mathbf{10}^{\mathbf{6}} \cdot psi\right)$ *(MMPDS-03, Fig. 6.2.1.0(b).)*

Thermal coefficients for bolt

$\beta_bolt_hot := \mathbf{9.1} \cdot \mathbf{10}^{-\mathbf{6}} \cdot \frac{\frac{in}{in}}{deg}$ $\beta_bolt_cold := \mathbf{8.5} \cdot \mathbf{10}^{-\mathbf{6}} \cdot \frac{\frac{in}{in}}{deg}$ *(MMPDS-03, Fig. 6.2.1.0.)*

Washer Data (Washer = **"NAS1149E0463R, .250 Nom Dia, 0.063 T, A-286, Passivate"** **)**

Thickness of washers:

head $twh := \mathbf{.063} \cdot in$

nut $twn := \mathbf{.063} \cdot in$

(these are total washer thickness, if there are more than one)

Diameter of washer under head:

Outer $Dwoh := \mathbf{.500} in$

Inner $Dwih := \mathbf{.265} \cdot in$

Diameter of washer under nut:

Outer $Dwon := \mathbf{.500} in$

Inner $Dwin := \mathbf{.265} \cdot in$

Note: If there is no washer - tw's, Dwo's and Dwi's should be zero

Modulus of elasticity:

head $E_washerh := \left(\mathbf{29.1} \cdot \mathbf{10}^{\mathbf{6}} \cdot psi\right)$

nut $E_washern := \left(\mathbf{29.1} \cdot \mathbf{10}^{\mathbf{6}} \cdot psi\right)$

Temperature correction factor for modulus:

head $TE_washerh := \mathbf{.98}$

nut $TE_washern := \mathbf{.98}$

(same as bolt)

Nut Data (Nut = **"NAS1291-C4M, .2500-28 UNJF-3B"** **)**

Height of nut $H := \mathbf{.204} \cdot in$

Nut dia. across flats $Dn := \mathbf{.385} \cdot in$

Temperature correction factor for nut strength $TS_nut := \mathbf{.96}$ *(same as bolt)*

Ultimate allowable stress, tensile $Ftu_nut := \mathbf{125000} \cdot psi$ $Fsu_nut := \mathbf{0.6} \cdot Ftu_nut$ *(Shear)*

Ultimate axial strength of nut $Ptu_nut := \mathbf{4530} \cdot lbf$

Prepared By	Name Kent Peters	Date 08/21/2008	Engineering and Science Contract Group *Structural Analysis Section*	File Name DS TRD RightAngle to SillJA
Checked By	C. Bala			Draw ing No. SDG39137848-003
Title	Debris Shield Fastener Joint Analysis for Bolt/Washer with Nut/Washer TRD Side - Right Angle to Sill Joint Assy			

Flange data (Stiffness of the joint depends upon number of members in the grip of the fasteners & their material properties)

Diameter of thru hole $D_hole := .272 \cdot in$

Flange_1 = **"Right Angle Bracket"**

Flange_2 = **"Sill Joint Assy"**

Material_1 = **"AL ALY 6061-T651"**

Material_2 = **"AL ALY 7050-T7451"**

Thickness of flanges $tf1 := .375 \cdot in$

$tf2 := .250 in$

Compressive Modulus of elasticity

$E_flange1 := (10.1 \cdot 10^6 \cdot psi)$

$E_flange2 := (10.6 \cdot 10^6 \cdot psi)$

Used Tf2E and alpha values for 7075 because no values were available for 7050

Temperature correction factor (modulus)

$Tf1E := .98$

$Tf2E := .98$

Coefficient of thermal expansion for flanges

$\beta_flange1_hot := 12.8 \cdot 10^{-6} \cdot \frac{\frac{in}{in}}{deg}$

$\beta_flange2_hot := 12.5 \cdot 10^{-6} \cdot \frac{\frac{in}{in}}{deg}$

$\beta_flange1_cold := 12.1 \cdot 10^{-6} \cdot \frac{\frac{in}{in}}{deg}$

$\beta_flange2_cold := 12.1 \cdot 10^{-6} \cdot \frac{\frac{in}{in}}{deg}$

Torque/Preload data

Maximum torque $Tmax := 103.2 \cdot in \cdot lbf$

Minimum torque $Tmin := 87.7 in \cdot lbf$

(Shigley's "Mechanical Engineering Design")

Joint is lubed

Preload Uncertainty $u := 0.25$ *(0.25 lubed/0.35 dry)*

Torque coefficient $k := 0.15$ *(0.15 lubed/0.20 dry)*

Loading plane factor $n := 0.5$

Stiffness and Margin calculations are hidden

This file uses the calculations shown in \\escfil02\2i11_mathcad\8307_bolts\Rev_D\bolt_stiffness_nut.mcd

Fri Apr 27 14:15:49 2007

Bolt Load data

Bolt/joint stiffness factor	= **0.336**	Preload due to temperature	Pthr_pos = **114.4** lbf
Max. preload	PLDmax = **3554** lbf		Pthr_neg = **−240** lbf
Min. preload	PLDmin = **1342** lbf		
Nom. preload	PLDnom = **2752** lbf	Uncertainty factor	u = **0.250**
Preload to yield ratio (nom.)	PLDratio = **0.677**	Torque coefficient	k = **0.150**
Joint separation load	Psep = **241.200** lbf	Loading plane factor	n = **0.500**

Bolt Load data (cont.)

Applied Tensile load on the bolt P = **201.000** lbf

Applied shear on the bolt V = **357.000** lbf

Applied bending on the bolt M = **0.000** in·lbf

Max. load on the bolt with preload and Factor of safety

Pb = **3632** lbf *(ultimate)*

Pby = **3603** lbf *(yield)*

Max. load on the bolt with preload WithOut factor of safety

Pbapp = **3593** lbf

Bolt ultimate tensile strength PAt = **5419** lbf

Thread pullout strength PAs = **4349** lbf

Nut ultimate tensile strength Ptu_nut = **4349** lbf

Bolt shear strength VAu = **3001** lbf

Bolt bending strength MAu = **150** in·lbf

General Checks

length_check = **"Bolt length is sufficient and nut fully engaged"**

cone_check = **"Joint pressure cone does not extend pass flange edge"**

preload_check = **"Nominal preload >= 65% of bolt yield strength"**

washer_check = **"Washers under head and nut do not extend past flanges"**

Summary of Margins for bolt:

Joint separation	MS_1 = **4.81**	Direct Thread shear Ultimate	MS_6 = **8.41**
Direct Tension Ultimate	MS_2 = **10.72**	Total Thread shear Ultimate	MS_7 = **0.2**
Direct Tension Yield	MS_3 = **13.07**	Shear Ultimate	MS_8 = **2.65**
Total Tension Ultimate	MS_4 = **0.49**	Bending Ultimate	MS_9 = **100**
Total Tension Yield	MS_5 = **0.13**	Combined shear, tension and bending ultimate	MS_{10} = **0.45**

Smallest margin of safety for the bolt, and the failure mode:

MSbolt = **0.13** Failure_Mode = **"Total Tension Yield"**

Fail-safe Analysis

Fail-safe Loads

Applied tensile load $P_FS := 240 \cdot lbf$

Applied shear load $V_FS := 666 \cdot lbf$

Applied bending moment $M_FS := 0 \cdot in \cdot lbf$

Fail-safe Factors of Safety

Ultimate $SFu_FS := 1.0$

Joint Separation $SFsep_FS := 1.0$

Fail Safe Margin calculations are hidden / stiffness & allowable data is not recalculated
This file uses the calculations shown in \\escfil02\2i11_mathcad\8307_bolts\Rev_D\bolt_stiffness_nut_FS.mcd

Fri Apr 27 14:16:05 2007

Bolt Fail-safe Load data

Joint separation load $Psep_FS = 240.000\ lbf$

Max. load on the bolt(ultimate) $Pb_FS = 3600.7\ lbf$

Summary of fail-safe Margins for bolt:

Joint separation $MS_FS_1 = 4.84$

Direct Tension Ultimate $MS_FS_2 = 18.64$

Total Tension Ultimate $MS_FS_3 = 0.51$

Direct Thread shear Ultimate $MS_FS_4 = 14.76$

Total Thread shear Ultimate $MS_FS_5 = 0.21$

Shear Ultimate $MS_FS_6 = 2.92$

Bending Ultimate $MS_FS_7 = 10$

Combined shear, tension and bending ultimate $MS_FS_8 = 0.47$

Determination of the smallest fail-safe margin of safety for the bolt, and the failure mode:

$MSbolt_FS = 0.21$ $Failure_Mode_FS =$ **"Total Thread Shear Ultimate (Nut)"**

Prepared By	Name Kent Peters	Date 08/21/2008	Engineering and Science Contract Group *Structural Analysis Section*	File Name DS TRD RightAngle to SillJA
Checked By	C. Bala			Draw ing No. SDG39137848-003
Title	Debris Shield Fastener Joint Analysis for Bolt/Washer with Nut/Washer TRD Side - Right Angle to Sill Joint Assy			

Bolt Hole Analysis

Recall loads from bolt calculation

Safety Factors	SFu = **2.000**	*(Ultimate)*	SFy = **1.250**	*(Yield)*
	FF = **1.150**	*(Fitting Factor)*		
Input Loads	V = **357** lbf	*(Shear Load)*	P = **201.000** lbf	*(Axial Load)*
Bolt calc results	Pb = **3632** lbf	*(Max Bolt Load)*		
Dimensions	L = **1.125** in	*(Length of Bolt)*	twh = **0.063** in	*(Thickness of Washer)*

Shear Tear-Out Check

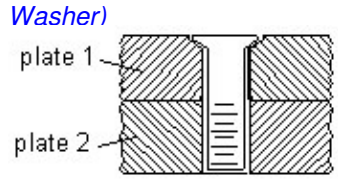

Recall bolt hole dimensions

$tf_1 := tf1$ $\quad tf_1 = \mathbf{0.375}\,in$ *(Entire Thickness of Flange 1)* $\quad Tf1E = \mathbf{0.980}$

$tf_2 := tf2$ $\quad tf_2 = \mathbf{0.250}\,in$ *(Entire Thickness of Flange 2)* $\quad Tf2E = \mathbf{0.980}$

$edge_1 := edge1$ $\quad edge_1 = \mathbf{0.375}\,in$ *(Edge Distance for Hole in Plate 1)*

$edge_2 := edge2$ $\quad edge_2 = \mathbf{0.380}\,in$ *(Edge Distance for Hole in Plate 2)*

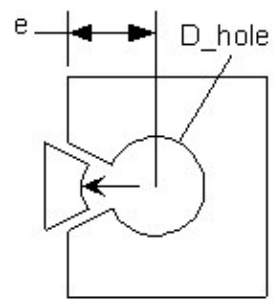

Typical shear tear-out failure

$D = \mathbf{0.250}\,in$ *(Diameter of Bolt)*

$D_shank = \mathbf{0.244}\,in$ *(Min. Shank Diameter of Bolt)*

$D_hole = \mathbf{0.272}\,in$ *(Diameter of Hole)*

Shear area of the mating components (Ref. Analysis & Design of Flight Vehicle Structures, Bruhn, Pg. D1.5)

$$A_{shrpl} := \overrightarrow{\left[2 \cdot tf \cdot \left(edge - \frac{1}{2} D_hole\right)\right]} \qquad \begin{pmatrix} Plate1 \\ Plate2 \end{pmatrix} \qquad A_{shrpl} = \begin{pmatrix} \mathbf{0.179} \\ \mathbf{0.122} \end{pmatrix} in^2$$

Allowables for plates that fastener goes through

$Fsu_1 := Tf1E \cdot \mathbf{27} \cdot ksi$ $\quad Fsu_1 = \mathbf{26.460}\,ksi$ *(Ultimate Shear Allowable for Plate 1)*

$Fsu_2 := Tf2E \cdot \mathbf{43} \cdot ksi$ $\quad Fsu_2 = \mathbf{42.140}\,ksi$ *(Ultimate Shear Allowable for Plate 2)*

$$P_{su} := \overrightarrow{\left(A_{shrpl} \cdot Fsu\right)} \qquad P_{su} = \begin{pmatrix} \mathbf{4743} \\ \mathbf{5141} \end{pmatrix} lbf$$ *(Shear Ultimate Allowable)*

MS for Shear Tear-Out

$$MS_{su} := \overrightarrow{\left(\frac{P_{su}}{V \cdot SFu \cdot FF} - 1\right)} \qquad \begin{pmatrix} Plate1 \\ Plate2 \end{pmatrix} \qquad MS_{su} = \begin{pmatrix} \mathbf{4.78} \\ \mathbf{5.26} \end{pmatrix}$$

$$MS_{bh_1} := \min\left(MS_{su}\right)$$

$MS_{bh_1} = \mathbf{4.776}$ ***... Shear Tear-Out MS***

Bearing Check

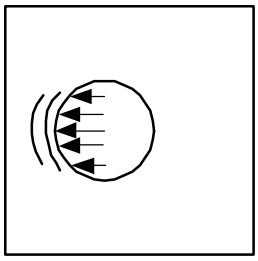

Typical Bearing Failure

Recall bolt hole dimensions

$tf_1 = \mathbf{0.375}\,in$ *(Thickness of Plate 1)*

$tf_2 = \mathbf{0.250}\,in$ *(Thickness of Plate 2)*

$edge_1 = \mathbf{0.375}\,in$ *(Edge Distance for thru Hole in Plate 1)*

$edge_2 = \mathbf{0.380}\,in$ *(Edge Distance for tapped Hole in Plate 2)*

$A_{br} := \overrightarrow{(tf \cdot \min(D, D_shank))}$ $\begin{pmatrix} \text{Plate1} \\ \text{Plate2} \end{pmatrix}$ $A_{br} = \begin{pmatrix} \mathbf{0.091} \\ \mathbf{0.061} \end{pmatrix} in^2$ *(Bearing Areas)*

$e_D := \overrightarrow{\dfrac{edge}{D_hole}}$ $e_D = \begin{pmatrix} \mathbf{1.379} \\ \mathbf{1.397} \end{pmatrix}$ *(e/D for Plates)*

Allowables for plates that fastener goes through

Bearing strength at e/D = 1.5

$Fbru15_1 := Tf1E \cdot \mathbf{67}ksi$ $Fbru15_1 = \mathbf{65.66}\,ksi$

$Fbry15_1 := Tf1E \cdot \mathbf{50} \cdot ksi$ $Fbry15_1 = \mathbf{49}\,ksi$

$Fbru15_2 := Tf2E \cdot \mathbf{107}ksi$ $Fbru15_2 = \mathbf{104.86}\,ksi$

$Fbry15_2 := Tf2E \cdot \mathbf{86} \cdot ksi$ $Fbry15_2 = \mathbf{84.28}\,ksi$

Bearing strength at e/D = 2.0

$Fbru20_1 := Tf1E \cdot \mathbf{88}ksi$ $Fbru20_1 = \mathbf{86.24}\,ksi$

$Fbry20_1 := Tf1E \cdot \mathbf{58} \cdot ksi$ $Fbry20_1 = \mathbf{56.840}\,ksi$

$Fbru20_2 := Tf2E \cdot \mathbf{140}ksi$ $Fbru20_2 = \mathbf{137.2}\,ksi$

$Fbry20_2 := Tf2E \cdot \mathbf{101} \cdot ksi$ $Fbry20_2 = \mathbf{98.980}\,ksi$

Modified bearing strength

$$Fbru_m_1 := if\left[e_D_1 > \mathbf{2.0}, Fbru20_1, if\left[(e_D_1 > \mathbf{1.5}) \cdot (e_D_1 < \mathbf{2.0}), Fbru15_1 + \frac{e_D_1 - \mathbf{1.5}}{\mathbf{2.0} - \mathbf{1.5}} \cdot (Fbru20_1 - Fbru15_1), \left[Fbru15_1 \cdot (e_D_1 - \mathbf{0.5})\right]\right]\right]$$

$$Fbru_m_2 := if\left[e_D_2 > \mathbf{2.0}, Fbru20_2, if\left[(e_D_2 > \mathbf{1.5}) \cdot (e_D_2 < \mathbf{2.0}), Fbru15_2 + \frac{e_D_2 - \mathbf{1.5}}{\mathbf{2.0} - \mathbf{1.5}} \cdot (Fbru20_2 - Fbru15_2), \left[Fbru15_2 \cdot (e_D_2 - \mathbf{0.5})\right]\right]\right]$$

$$Fbry_m_1 := if\left[e_D_1 > \mathbf{2.0}, Fbry20_1, if\left[(e_D_1 > \mathbf{1.5}) \cdot (e_D_1 < \mathbf{2.0}), Fbry15_1 + \frac{e_D_1 - \mathbf{1.5}}{\mathbf{2.0} - \mathbf{1.5}} \cdot (Fbry20_1 - Fbry15_1), \left[Fbry15_1 \cdot (e_D_1 - \mathbf{0.5})\right]\right]\right]$$

$$Fbry_m_2 := if\left[e_D_2 > \mathbf{2.0}, Fbry20_2, if\left[(e_D_2 > \mathbf{1.5}) \cdot (e_D_2 < \mathbf{2.0}), Fbry15_2 + \frac{e_D_2 - \mathbf{1.5}}{\mathbf{2.0} - \mathbf{1.5}} \cdot (Fbry20_2 - Fbry15_2), \left[Fbry15_2 \cdot (e_D_2 - \mathbf{0.5})\right]\right]\right]$$

$Fbru_m = \begin{pmatrix} \mathbf{57.694} \\ \mathbf{94.066} \end{pmatrix} \begin{pmatrix} \text{Plate1} \\ \text{Plate2} \end{pmatrix}$ *(Ultimate)*

$Fbry_m = \begin{pmatrix} \mathbf{43.055} \\ \mathbf{75.604} \end{pmatrix} \begin{pmatrix} \text{Plate1} \\ \text{Plate2} \end{pmatrix}$ *(Yield)*

$P_{bru} := \overrightarrow{(A_{br} \cdot Fbru_m)}$ $\quad P_{bru} = \begin{pmatrix} 5268 \\ 5726 \end{pmatrix} lbf$ *(Bearing Ultimate Allowable)*

$P_{bry} := \overrightarrow{(A_{br} \cdot Fbry_m)}$ $\quad P_{bry} = \begin{pmatrix} 3931 \\ 4602 \end{pmatrix} lbf$ *(Bearing Yield Allowable)*

MS for Bearing Failure

$\mathbf{MS_{bru}} := \overrightarrow{\left(\frac{P_{bru}}{V \cdot SFu \cdot FF} - 1\right)}$ $\quad \mathbf{MS_{bru}} = \begin{pmatrix} 5.416 \\ 5.974 \end{pmatrix}$ $\begin{pmatrix} \text{Plate1} \\ \text{Plate2} \end{pmatrix}$

$MS_{bh_2} := \min(\mathbf{MS_{bru}})$

$MS_{bh_2} = 5.416$ ***... Bearing MS based on Ultimate Strength***

$MS_{bry} := \overrightarrow{\left(\frac{P_{bry}}{V \cdot SFy \cdot FF} - 1\right)}$ $\quad MS_{bry} = \begin{pmatrix} 6.66 \\ 7.97 \end{pmatrix}$ $\begin{pmatrix} \text{Plate1} \\ \text{Plate2} \end{pmatrix}$

$MS_{bh_3} := \min(MS_{bry})$

$MS_{bh_3} = 6.661$ ***... Bearing MS based on Yield Strength***

Prepared By	Name	Date	Engineering and Science Contract Group	File Name
	Kent Peters	08/21/2008		DS TRD TabAngle to Bumper.xmcdz
Checked By	C. Bala		*Structural Analysis Section*	Drawing No. SDG39137848
Title	**Debris Shield Fastener Joint Analysis for Bolt/Washer with Nutplate/No Washer TRD Side - Tab Angle to Outer Bumper**			

CHECK

Note: Figure is for reference only.
Not to scale. Actual joint made differ.
Washer may be on nut side, head side, or both

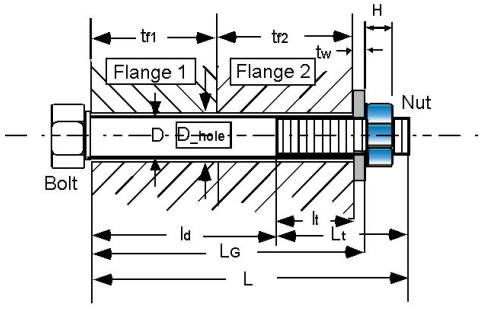

Bolt := **"NAS1133E4, .1900-32, 0.526 L, A-286"**

Washer := **"NAS1149E0332R"**

Nut := **"MS21076L3N"**

Flange_1 := **"Outer Bumper"**
Part_Number_1 := **"SEG39137851"**
Material_1 := **"AL ALY 2219-T87"**

Flange_2 := **"Tab Angle Bracket"**
Part_Number_2 := **"SDG39137847"**
Material_2 := **"AL ALY 7075-T7351"**

Minimum edge distance of flange one edge1 := **.85**·in

Minimum edge distance of flange two edge2 := **.312**·in

Loads (reference)

Applied tensile load P := **49.8**lbf

Applied shear load V := **489.**lbf

Applied bending moment M := **0**in·lbf

(Worst case combination)

Factors of Safety (reference)

SFu := **2.00** *(Ultimate)*

SFy := **1.25** *(Yield)*

FF := **1.15** *(Fitting factor)*

SFsep := **1.20** *(Joint Separation)*

Temperature data (reference)

Assembly Temp_initial := **70**·deg

Temp_max := **140**·deg *(Maximum)*

Temp_min := –**76**·deg *(Minimum)*

Note: these are maximum temperatures that hardware sees / if maximum load occurs at a different temperature this will be conservative

Bolt Data (Bolt = **"NAS1133E4, .1900-32, 0.526 L, A-286"**)

Nominal diameter of bolt D := **.19**·in

Number of threads/inch Nt := **32**·$\frac{1}{in}$

Shank diameter of bolt D_shank := **.1885**·in

Note: if there is a retainer groove in the fastener, this should be the calculated diameter to give an equivalent cross sectional area

Total length of bolt L := **.526**·in

Threaded length Lt := **.276**·in *(If bolt is fully threaded, input Lt = L)*

Bolt head dia. across flats dw := **.357**·in *(dia of pressure boss if it exists, otherwise dia of head)*

Bolt head height bh := **.122**·in *(head height is 0 if bolt is flat head)*

Bolt Data cont. (Bolt = **"NAS1133E4, .1900-32, 0.526 L, A-286"**)

Fri Apr 27 14:15:35 2007

Thread data lookup table is hidden
This file uses the data shown in \\escfil02\2i11_mathcad\8307_bolts\Rev_D\thread_data.mcd

Temperature correction factor for bolt strength $TSu_bolt := .96$ $TSy_bolt := .96$ *(MMPDS-03, Fig. 6.2.1.1.1.)*

Bolt ultimate tensile allowable stress $Ftu_bolt := 160000 \cdot psi$ $Fty_bolt := 120000 \cdot psi$

Bolt ultimate shear allowable stress $Fsu_bolt := 0.6 \cdot Ftu_bolt$

Temperature correction factor for bolt modulus $TE_bolt := .98$ *(MMPDS-03, Fig. 6.2.1.1.4(a).)*

Modulus of elasticity of bolt $E_bolt := \left(29.1 \cdot 10^{6} \cdot psi\right)$ *(MMPDS-03, Fig. 6.2.1.0(b).)*

Thermal coefficients for bolt

$\beta_bolt_hot := 9.1 \cdot 10^{-6} \cdot \frac{\frac{in}{in}}{deg}$ $\beta_bolt_cold := 8.5 \cdot 10^{-6} \cdot \frac{\frac{in}{in}}{deg}$ *(MMPDS-03, Fig. 6.2.1.0.)*

Washer Data (Washer = **"NAS1149E0332R"**)

Thickness of washers:

head $twh := .032 \cdot in$

nut $twn := 0.0 \cdot in$

(these are total washer thickness, if there are more than one)

Diameter of washer under head:

Outer $Dwoh := .438 in$

Inner $Dwih := .203 \cdot in$

Diameter of washer under nut:

Outer $Dwon := 0.0 in$

Inner $Dwin := 0.0 \cdot in$

Note: If there is no washer - tw's, Dwo's and Dwi's should be zero

Modulus of elasticity:

head $E_washerh := \left(29.1 \cdot 10^{6} \cdot psi\right)$

nut $E_washern := \left(0.0 \cdot 10^{6} \cdot psi\right)$

Temperature correction factor for modulus:

head $TE_washerh := .98$ *(same as bolt)*

nut $TE_washern := 0.0$

Nut Data (Nut = **"MS21076L3N"**)

Height of nut $H := .250 \cdot in$ Nut dia. across flats $Dn := .290 \cdot in$

Temperature correction factor for nut strength $TS_nut := .96$ *(same as bolt)*

Ultimate allowable stress, tensile $Ftu_nut := 125000 \cdot psi$ $Fsu_nut := 0.6 \cdot Ftu_nut$ *(Shear)*

Ultimate axial strength of nut $Ptu_nut := 2460 \cdot lbf$

Flange data (Stiffness of the joint depends upon number of members in the grip of the fasteners & their material properties)

Diameter of thru hole $D_hole := .213 \cdot in$

Flange_1 = **"Outer Bumper"** Flange_2 = **"Tab Angle Bracket"**

Material_1 = **"AL ALY 2219-T87"** Material_2 = **"AL ALY 7075-T7351"**

Thickness of flanges $tf1 := .100 \cdot in$ $tf2 := .125 in$

Compressive Modulus of elasticity

$E_flange1 := \left(10.8 \cdot 10^{6} \cdot psi\right)$ $E_flange2 := \left(10.6 \cdot 10^{6} \cdot psi\right)$

Temperature correction factor (modulus)

$Tf1E := .96$ $Tf2E := .98$

Coefficient of thermal expansion for flanges

$\beta_flange1_hot := 12.4 \cdot 10^{-6} \cdot \frac{\frac{in}{in}}{deg}$ $\beta_flange2_hot := 12.5 \cdot 10^{-6} \cdot \frac{\frac{in}{in}}{deg}$

$\beta_flange1_cold := 11.6 \cdot 10^{-6} \cdot \frac{\frac{in}{in}}{deg}$ $\beta_flange2_cold := 12.1 \cdot 10^{-6} \cdot \frac{\frac{in}{in}}{deg}$

Torque/Preload data

Maximum torque $Tmax := 44.4 \cdot in \cdot lbf$

Minimum torque $Tmin := 37.8 in \cdot lbf$

Joint is lubed/dry Preload Uncertainty $u := 0.25$ *(0.25 lubed/0.35 dry)* Loading plane factor $n := 0.5$

Torque coefficient $k := 0.15$ *(0.15 lubed/0.20 dry)*

Stiffness and Margin calculations are hidden
This file uses the calculations shown in \\escfil02\2i11_mathcad\8307_bolts\Rev_D\bolt_stiffness_nut.mcd

Fri Apr 27 14:15:49 2007

Bolt Load data

Bolt/joint stiffness factor	= **0.331**	Preload due to temperature	Pthr_pos = **56** lbf
Max. preload	PLDmax = **2003** lbf		Pthr_neg = **−117.6** lbf
Min. preload	PLDmin = **780** lbf		
Nom. preload	PLDnom = **1558** lbf	Uncertainty factor	u = **0.250**
Preload to yield ratio (nom.)	PLDratio = **0.703**	Torque coefficient	k = **0.150**
Joint separation load	Psep = **59.760** lbf	Loading plane factor	n = **0.500**

Bolt Load data (cont.)

Applied Tensile load on the bolt P = **49.800** lbf

Applied shear on the bolt V = **489.000** lbf

Applied bending on the bolt M = **0.000** in·lbf

Max. load on the bolt with preload and Factor of safety

Pb = **2022** lbf *(ultimate)*

Pby = **2015** lbf *(yield)*

Max. load on the bolt with preload WithOut factor of safety

Pbapp = **2013** lbf

Bolt ultimate tensile strength PAt = **2957** lbf

Thread pullout strength PAs = **2362** lbf

Nut ultimate tensile strength Ptu_nut = **2362** lbf

Bolt shear strength VAu = **2572** lbf

Bolt bending strength MAu = **61** in·lbf

General Checks

length_check = **"Bolt length should be increased! nut is fully threaded, but does not extend past nut"**

cone_check = **"Joint pressure cone does not extend pass flange edge"**

preload_check = **"Nominal preload >= 65% of bolt yield strength"**

washer_check = **"Washers under head and nut do not extend past flanges"**

Summary of Margins for bolt:

Joint separation	MS_1 = **12.59**	Direct Thread shear Ultimate	MS_6 = **19.62**
Direct Tension Ultimate	MS_2 = **24.81**	Total Thread shear Ultimate	MS_7 = **0.17**
Direct Tension Yield	MS_3 = **29.98**	Shear Ultimate	MS_8 = **1.29**
Total Tension Ultimate	MS_4 = **0.46**	Bending Ultimate	MS_9 = **100**
Total Tension Yield	MS_5 = **0.1**	Combined shear, tension and bending ultimate	MS_{10} = **0.32**

Smallest margin of safety for the bolt, and the failure mode:

MSbolt = **0.1**

Failure_Mode = **"Total Tension Yield"**

Fail-safe Analysis

Fail-safe Loads

Applied tensile load $P_FS := 105.6 \cdot lbf$

Applied shear load $V_FS := 666.6 \cdot lbf$

Applied bending moment $M_FS := 0 \cdot in \cdot lbf$

Fail-safe Factors of Safety

Ultimate $SFu_FS := 1.0$

Joint Separation $SFsep_FS := 1.0$

Fail Safe Margin calculations are hidden / stiffness & allowable data is not recalculated
This file uses the calculations shown in \\escfil02\2i11_mathcad\8307_bolts\Rev_D\bolt_stiffness_nut_FS.mcd

Fri Apr 27 14:16:05 2007

Bolt Fail-safe Load data

Joint separation load $Psep_FS = 105.600\ lbf$

Max. load on the bolt(ultimate) $Pb_FS = 2023.5\ lbf$

Summary of fail-safe Margins for bolt:

Joint separation $MS_FS_1 = 6.69$

Direct Tension Ultimate $MS_FS_2 = 23.35$

Total Tension Ultimate $MS_FS_3 = 0.46$

Direct Thread shear Ultimate $MS_FS_4 = 18.45$

Total Thread shear Ultimate $MS_FS_5 = 0.17$

Shear Ultimate $MS_FS_6 = 2.35$

Bending Ultimate $MS_FS_7 = 10$

Combined shear, tension and bending ultimate $MS_FS_8 = 0.41$

Determination of the smallest fail-safe margin of safety for the bolt, and the failure mode:

$MSbolt_FS = 0.17$

$Failure_Mode_FS =$ **"Total Thread Shear Ultimate (Nut)"**

Prepared By	Name	Date	Engineering and Science Contract Group	File Name
	Kent Peters	08/21/2008		DS TRD TabAngle to Bumper.xmcdz
Checked By	C. Bala		Structural Analysis Section	Drawing No. SDG39137848
Title	Debris Shield Fastener Joint Analysis for Bolt/Washer with Nutplate/No Washer TRD Side - Tab Angle to Outer Bumper			

Bolt Hole Analysis

Recall loads from bolt calculation

Safety Factors	SFu = **2.000**	*(Ultimate)*	SFy = **1.250**	*(Yield)*
	FF = **1.150**	*(Fitting Factor)*		
Input Loads	V = **489** lbf	*(Shear Load)*	P = **49.800** lbf	*(Axial Load)*
Bolt calc results	Pb = **2022** lbf	*(Max Bolt Load)*		
Dimensions	L = **0.526** in	*(Length of Bolt)*	twh = **0.032** in	*(Thickness of Washer)*

Shear Tear-Out Check (Flange_1 = **"Outer Bumper"** , Flange_2 = **"Tab Angle Bracket"**)

Recall bolt hole dimensions

$tf_1 := tf1$ $\quad tf_1 = 0.100\,in$ *(Entire Thickness of Flange 1)* $\quad Tf1E = 0.960$

$tf_2 := tf2$ $\quad tf_2 = 0.125\,in$ *(Entire Thickness of Flange 2)* $\quad Tf2E = 0.980$

$edge_1 := edge1$ $\quad edge_1 = 0.850\,in$ *(Edge Distance for Hole in Plate 1)*

$edge_2 := edge2$ $\quad edge_2 = 0.312\,in$ *(Edge Distance for Hole in Plate 2)*

D = **0.190** in *(Diameter of Bolt)*

D_shank = **0.188** in *(Min. Shank Diameter of Bolt)*

D_hole = **0.213** in *(Diameter of Hole)*

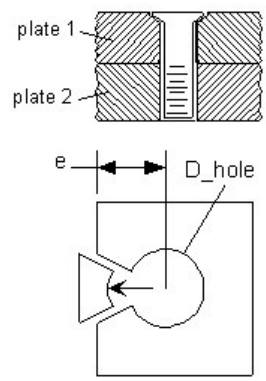

Typical shear tear-out failure

Shear area of the mating components (Ref. Analysis & Design of Flight Vehicle Structures, Bruhn, Pg. D1.5)

$$A_{shrpl} := \overrightarrow{\left[2 \cdot tf \cdot \left(edge - \frac{1}{2} D_hole\right)\right]} \qquad \begin{pmatrix} \text{Plate1} \\ \text{Plate2} \end{pmatrix} \qquad A_{shrpl} = \begin{pmatrix} 0.149 \\ 0.051 \end{pmatrix} in^2$$

Allowables for plates that fastener goes through

$Fsu_1 := Tf1E \cdot 36 \cdot ksi$ $\quad Fsu_1 = 34.560\,ksi$ *(Ultimate Shear Allowable for Plate 1)*

$Fsu_2 := Tf2E \cdot 39 \cdot ksi$ $\quad Fsu_2 = 38.220\,ksi$ *(Ultimate Shear Allowable for Plate 2)*

$$P_{su} := \overrightarrow{\left(A_{shrpl} \cdot Fsu\right)} \qquad P_{su} = \begin{pmatrix} 5139 \\ 1964 \end{pmatrix} lbf$$ *(Shear Ultimate Allowable)*

MS for Shear Tear-Out

$$MS_{su} := \overrightarrow{\left(\frac{P_{su}}{V \cdot SFu \cdot FF} - 1\right)} \qquad \begin{pmatrix} \text{Plate1} \\ \text{Plate2} \end{pmatrix} \qquad MS_{su} = \begin{pmatrix} 3.57 \\ 0.75 \end{pmatrix}$$

$MS_{bh_1} := \min(MS_{su})$ $\quad MS_{bh_1} = 0.746$ *... Shear Tear-Out MS*

Bearing Check

Recall bolt hole dimensions

$tf_1 = 0.100\,in$ *(Thickness of Plate 1)*

$tf_2 = 0.125\,in$ *(Thickness of Plate 2)*

$edge_1 = 0.850\,in$ *(Edge Distance for thru Hole in Plate 1)*

$edge_2 = 0.312\,in$ *(Edge Distance for tapped Hole in Plate 2)*

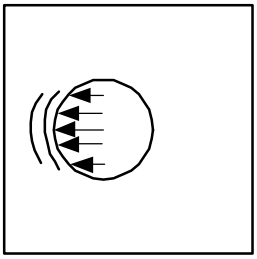

Typical Bearing Failure

$A_{br} := \overrightarrow{(tf \cdot \min(D, D_shank))}$ $\begin{pmatrix} \text{Plate1} \\ \text{Plate2} \end{pmatrix}$ $A_{br} = \begin{pmatrix} 0.019 \\ 0.024 \end{pmatrix} in^2$ *(Bearing Areas)*

$e_D := \frac{\overrightarrow{edge}}{D_hole}$ $e_D = \begin{pmatrix} 3.991 \\ 1.465 \end{pmatrix}$ *(e/D for Plates)*

Allowables for plates that fastener goes through

Bearing strength at e/D = 1.5

$Fbru15_1 := Tf1E \cdot 99 ksi$ $Fbru15_1 = 95.04\,ksi$

$Fbry15_1 := Tf1E \cdot 83 \cdot ksi$ $Fbry15_1 = 79.68\,ksi$

$Fbru15_2 := Tf2E \cdot 102 ksi$ $Fbru15_2 = 99.96\,ksi$

$Fbry15_2 := Tf2E \cdot 82 \cdot ksi$ $Fbry15_2 = 80.36\,ksi$

Bearing strength at e/D = 2.0

$Fbru20_1 := Tf1E \cdot 126 ksi$ $Fbru20_1 = 120.96\,ksi$

$Fbry20_1 := Tf1E \cdot 96 \cdot ksi$ $Fbry20_1 = 92.160\,ksi$

$Fbru20_2 := Tf2E \cdot 132 ksi$ $Fbru20_2 = 129.36\,ksi$

$Fbry20_2 := Tf2E \cdot 97 \cdot ksi$ $Fbry20_2 = 95.060\,ksi$

Modified bearing strength

$$Fbru_m_1 := if\left[e_D_1 > 2.0, Fbru20_1, if\left[(e_D_1 > 1.5)\cdot(e_D_1 < 2.0), Fbru15_1 + \frac{e_D_1 - 1.5}{2.0 - 1.5}\cdot(Fbru20_1 - Fbru15_1), \left[Fbru15_1\cdot(e_D_1 - 0.5)\right]\right]\right]$$

$$Fbru_m_2 := if\left[e_D_2 > 2.0, Fbru20_2, if\left[(e_D_2 > 1.5)\cdot(e_D_2 < 2.0), Fbru15_2 + \frac{e_D_2 - 1.5}{2.0 - 1.5}\cdot(Fbru20_2 - Fbru15_2), \left[Fbru15_2\cdot(e_D_2 - 0.5)\right]\right]\right]$$

$$Fbry_m_1 := if\left[e_D_1 > 2.0, Fbry20_1, if\left[(e_D_1 > 1.5)\cdot(e_D_1 < 2.0), Fbry15_1 + \frac{e_D_1 - 1.5}{2.0 - 1.5}\cdot(Fbry20_1 - Fbry15_1), \left[Fbry15_1\cdot(e_D_1 - 0.5)\right]\right]\right]$$

$$Fbry_m_2 := if\left[e_D_2 > 2.0, Fbry20_2, if\left[(e_D_2 > 1.5)\cdot(e_D_2 < 2.0), Fbry15_2 + \frac{e_D_2 - 1.5}{2.0 - 1.5}\cdot(Fbry20_2 - Fbry15_2), \left[Fbry15_2\cdot(e_D_2 - 0.5)\right]\right]\right]$$

$Fbru_m = \begin{pmatrix} 120.96 \\ 96.44 \end{pmatrix} \begin{pmatrix} \text{Plate1} \\ \text{Plate2} \end{pmatrix}$ *(Ultimate)*

$Fbry_m = \begin{pmatrix} 92.16 \\ 77.53 \end{pmatrix} \begin{pmatrix} \text{Plate1} \\ \text{Plate2} \end{pmatrix}$ *(Yield)*

$P_{bru} := \overrightarrow{(A_{br} \cdot Fbru_m)}$ $\quad P_{bru} = \begin{pmatrix} 2280 \\ 2272 \end{pmatrix} lbf$ *(Bearing Ultimate Allowable)*

$P_{bry} := \overrightarrow{(A_{br} \cdot Fbry_m)}$ $\quad P_{bry} = \begin{pmatrix} 1737 \\ 1827 \end{pmatrix} lbf$ *(Bearing Yield Allowable)*

MS for Bearing Failure

$\mathbf{MS_{bru}} := \overrightarrow{\left(\frac{P_{bru}}{V \cdot SFu \cdot FF} - 1\right)}$ $\quad \mathbf{MS_{bru}} = \begin{pmatrix} 1.027 \\ 1.020 \end{pmatrix}$ $\begin{pmatrix} \text{Plate1} \\ \text{Plate2} \end{pmatrix}$

$MS_{bh_2} := \min(\mathbf{MS_{bru}})$

$MS_{bh_2} = 1.02$ ***... Bearing MS based on Ultimate Strength***

$MS_{bry} := \overrightarrow{\left(\frac{P_{bry}}{V \cdot SFy \cdot FF} - 1\right)}$ $\quad MS_{bry} = \begin{pmatrix} 1.47 \\ 1.6 \end{pmatrix}$ $\begin{pmatrix} \text{Plate1} \\ \text{Plate2} \end{pmatrix}$

$MS_{bh_3} := \min(MS_{bry})$

$MS_{bh_3} = 1.471$ ***... Bearing MS based on Yield Strength***

Prepared By	Name Kent Peters	Date 08/21/2008	Engineering and Science Contract Group *Structural Analysis Section*	File Name DS TRD 2.70in Bathtub to Bumper
Checked By	C. Bala			Draw ing No. SDG39137848
Title	Debris Shield Fastener Joint Analysis for Bolt/Washer with Nutplate/No Washer TRD Side - Bathtub Bracket to Outer Bumper			

CHECK

Note: Figure is for reference only.
Not to scale. Actual joint made differ.
Washer may be on nut side, head side, or both

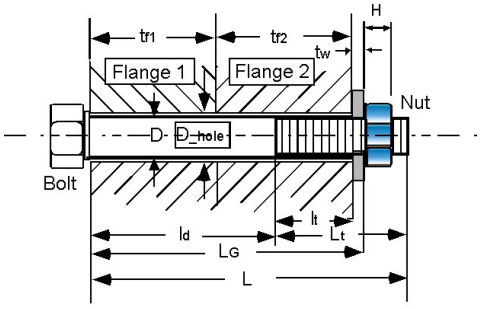

Bolt := **"NAS1133E4, .1900-32, 0.526 L, A-286"**

Washer := **"NAS1149E0332R"**

Nut := **"MS21076L3N"**

Flange_1 := **"2.70 in Bathtub Bracket"**
Part_Number_1 := **"SDG39137848-002"**
Material_1 := **"AL ALY 6061-T651"**

Flange_2 := **"Outer Bumper"**
Part_Number_2 := **"SEG39137851"**
Material_2 := **"AL ALY 2219-T87"**

Minimum edge distance of flange one — edge1 := **.5**·in

Minimum edge distance of flange two — edge2 := **.566**·in

Loads (reference)

Applied tensile load — P := **49.8**lbf

Applied shear load — V := **489.**lbf

Applied bending moment — M := **0**in·lbf

(Worst case combination)

Factors of Safety (reference)

SFu := **2.00** *(Ultimate)*

SFy := **1.25** *(Yield)*

FF := **1.15** *(Fitting factor)*

SFsep := **1.20** *(Joint Separation)*

Temperature data (reference)

Assembly — Temp_initial := **70**·deg

Temp_max := **140**·deg *(Maximum)*

Temp_min := **–76**·deg *(Minimum)*

Note: these are maximum temperatures that hardware sees / if maximum load occurs at a different temperature this will be conservative

Bolt Data (Bolt = **"NAS1133E4, .1900-32, 0.526 L, A-286"**)

Nominal diameter of bolt — D := **.19**·in

Number of threads/inch — Nt := **32**·$\frac{1}{in}$

Shank diameter of bolt — D_shank := **.1885**·in

Note: if there is a retainer groove in the fastener, this should be the calculated diameter to give an equivalent cross sectional area

Total length of bolt — L := **.526**·in

Threaded length — Lt := **.276**·in *(If bolt is fully threaded, input Lt = L)*

Bolt head dia. across flats — dw := **.357**·in *(dia of pressure boss if it exists, otherwise dia of head)*

Bolt head height — bh := **.122**·in *(head height is 0 if bolt is flat head)*

Bolt Data cont. (Bolt = **"NAS1133E4, .1900-32, 0.526 L, A-286"**)

Fri Apr 27 14:15:35 2007

Thread data lookup table is hidden

This file uses the data shown in \\escfil02\2i11_mathcad\8307_bolts\Rev_D\thread_data.mcd

Temperature correction factor for bolt strength: $TSu_bolt := \mathbf{.96}$ $TSy_bolt := \mathbf{.96}$ *(MMPDS-03, Fig. 6.2.1.1.1.)*

Bolt ultimate tensile allowable stress: $Ftu_bolt := \mathbf{160000} \cdot psi$ $Fty_bolt := \mathbf{120000} \cdot psi$

Bolt ultimate shear allowable stress: $Fsu_bolt := \mathbf{0.6} \cdot Ftu_bolt$

Temperature correction factor for bolt modulus: $TE_bolt := \mathbf{.98}$ *(MMPDS-03, Fig. 6.2.1.1.4(a).)*

Modulus of elasticity of bolt: $E_bolt := \left(\mathbf{29.1} \cdot \mathbf{10}^{6} \cdot psi\right)$ *(MMPDS-03, Fig. 6.2.1.0(b).)*

Thermal coefficients for bolt

$\beta_bolt_hot := \mathbf{9.1} \cdot \mathbf{10}^{-6} \cdot \frac{\frac{in}{in}}{deg}$ $\beta_bolt_cold := \mathbf{8.5} \cdot \mathbf{10}^{-6} \cdot \frac{\frac{in}{in}}{deg}$ *(MMPDS-03, Fig. 6.2.1.0.)*

Washer Data (Washer = **"NAS1149E0332R"**)

Thickness of washers:

head $twh := \mathbf{.032} \cdot in$

nut $twn := \mathbf{0.0} \cdot in$

(these are total washer thickness, if there are more than one)

Diameter of washer under head:

Outer $Dwoh := \mathbf{.438} in$

Inner $Dwih := \mathbf{.203} \cdot in$

Diameter of washer under nut:

Outer $Dwon := \mathbf{0.0} in$

Inner $Dwin := \mathbf{0.0} \cdot in$

Note: If there is no washer - tw's, Dwo's and Dwi's should be zero

Modulus of elasticity:

head $E_washerh := \left(\mathbf{29.1} \cdot \mathbf{10}^{6} \cdot psi\right)$

nut $E_washern := \left(\mathbf{0.0} \cdot \mathbf{10}^{6} \cdot psi\right)$

Temperature correction factor for modulus:

head $TE_washerh := \mathbf{.98}$

nut $TE_washern := \mathbf{0.0}$

(same as bolt)

Nut Data (Nut = **"MS21076L3N"**)

Height of nut: $H := \mathbf{.250} \cdot in$

Nut dia. across flats: $Dn := \mathbf{.290} \cdot in$

Temperature correction factor for nut strength: $TS_nut := \mathbf{.96}$ *(same as bolt)*

Ultimate allowable stress, tensile: $Ftu_nut := \mathbf{125000} \cdot psi$ $Fsu_nut := \mathbf{0.6} \cdot Ftu_nut$ *(Shear)*

Ultimate axial strength of nut: $Ptu_nut := \mathbf{2460} \cdot lbf$

Prepared By	Name	Date	Engineering and Science Contract Group	File Name
	Kent Peters	08/21/2008		DS TRD 2.70in Bathtub to Bumper
Checked By	C. Bala		*Structural Analysis Section*	Drawing No. SDG39137848
Title	Debris Shield Fastener Joint Analysis for Bolt/Washer with Nutplate/No Washer TRD Side - Bathtub Bracket to Outer Bumper			

Flange data (Stiffness of the joint depends upon number of members in the grip of the fasteners & their material properties)

Diameter of thru hole $D_hole := .226 \cdot in$

Flange_1 = **"2.70 in Bathtub Bracket"**

Flange_2 = **"Outer Bumper"**

Material_1 = **"AL ALY 6061-T651"**

Material_2 = **"AL ALY 2219-T87"**

Thickness of flanges

$tf1 := .08 \cdot in$

$tf2 := .10 in$

Compressive Modulus of elastici

$E_flange1 := \left(10.1 \cdot 10^{6} \cdot psi\right)$

$E_flange2 := \left(10.8 \cdot 10^{6} \cdot psi\right)$

Temperature correction factor (modul

$Tf1E := .98$

$Tf2E := .96$

Coefficient of thermal expansion for flanges

$\beta_flange1_hot := 12.8 \cdot 10^{-6} \cdot \frac{\frac{in}{in}}{deg}$

$\beta_flange2_hot := 12.4 \cdot 10^{-6} \cdot \frac{\frac{in}{in}}{deg}$

$\beta_flange1_cold := 12.1 \cdot 10^{-6} \cdot \frac{\frac{in}{in}}{deg}$

$\beta_flange2_cold := 11.6 \cdot 10^{-6} \cdot \frac{\frac{in}{in}}{deg}$

Torque/Preload data

Maximum torque $Tmax := 44.4 \cdot in \cdot lbf$

Minimum torque $Tmin := 37.8 in \cdot lbf$

Joint is lubed/dry

Preload Uncertainty $u := 0.25$ *(0.25 lubed/0.35 dry)*

Torque coefficient $k := 0.15$ *(0.15 lubed/0.20 dry)*

Loading plane factor $n := 0.5$

Stiffness and Margin calculations are hidden

This file uses the calculations shown in \\escfil02\2i11_mathcad\8307_bolts\Rev_D\bolt_stiffness_nut.mcd

Fri Apr 27 14:15:49 2007

Bolt Load data

Bolt/joint stiffness factor	= **0.355**	Preload due to temperature	Pthr_pos = **51.4** lbf
Max. preload	PLDmax = **1999** lbf		Pthr_neg = **−102.5** lbf
Min. preload	PLDmin = **795** lbf		
Nom. preload	PLDnom = **1558** lbf	Uncertainty factor	u = **0.250**
Preload to yield ratio (nom.)	PLDratio = **0.703**	Torque coefficient	k = **0.150**
Joint separation load	Psep = **59.760** lbf	Loading plane factor	n = **0.500**

Bolt Load data (cont.)

Applied Tensile load on the bolt P = **49.800** lbf

Applied shear on the bolt V = **489.000** lbf

Applied bending on the bolt M = **0.000** in·lbf

Max. load on the bolt with preload and Factor of safety

Pb = **2019** lbf *(ultimate)*

Pby = **2012** lbf *(yield)*

Max. load on the bolt with preload WithOut factor of safety

Pbapp = **2009** lbf

Bolt ultimate tensile strength PAt = **2957** lbf

Thread pullout strength PAs = **2362** lbf

Nut ultimate tensile strength Ptu_nut = **2362** lbf

Bolt shear strength VAu = **2572** lbf

Bolt bending strength MAu = **61** in·lbf

General Checks

length_check = **"Bolt length is sufficient and nut fully engaged"**

cone_check = **"Joint pressure cone does not extend pass flange edge"**

preload_check = **"Nominal preload >= 65% of bolt yield strength"**

washer_check = **"Washers under head and nut do not extend past flanges"**

Summary of Margins for bolt:

Joint separation	MS_1 = **13.06**	Direct Thread shear Ultimate	MS_6 = **19.62**
Direct Tension Ultimate	MS_2 = **24.81**	Total Thread shear Ultimate	MS_7 = **0.17**
Direct Tension Yield	MS_3 = **29.98**	Shear Ultimate	MS_8 = **1.29**
Total Tension Ultimate	MS_4 = **0.46**	Bending Ultimate	MS_9 = **100**
Total Tension Yield	MS_5 = **0.1**	Combined shear, tension and bending ultimate	MS_{10} = **0.32**

Smallest margin of safety for the bolt, and the failure mode:

MSbolt = **0.1**

Failure_Mode = **"Total Tension Yield"**

Prepared By	Name	Date	Engineering and Science Contract Group	File Name
	Kent Peters	08/21/2008		DS TRD 2.70in Bathtub to Bumper
Checked By	C. Bala		*Structural Analysis Section*	Draw ing No. SDG39137848
Title	Debris Shield Fastener Joint Analysis for Bolt/Washer with Nutplate/No Washer TRD Side - Bathtub Bracket to Outer Bumper			

Fail-safe Analysis

Fail-safe Loads

Applied tensile load $P_FS := 105.6 \cdot lbf$

Applied shear load $V_FS := 666.6 \cdot lbf$

Applied bending moment $M_FS := 0 \cdot in \cdot lbf$

Fail-safe Factors of Safety

Ultimate $SFu_FS := 1.0$

Joint Separation $SFsep_FS := 1.0$

Fail Safe Margin calculations are hidden / stiffness & allowable data is not recalculated

This file uses the calculations shown in \\escfil02\2i11_mathcad\8307_bolts\Rev_D\bolt_stiffness_nut_FS.mcd

Fri Apr 27 14:16:05 2007

Bolt Fail-safe Load data

Joint separation load $Psep_FS = 105.600\ lbf$

Max. load on the bolt(ultimate) $Pb_FS = 2020.4\ lbf$

Summary of fail-safe Margins for bolt:

Joint separation	$MS_FS_1 = 6.96$	Total Thread shear Ultimate	$MS_FS_5 = 0.17$
Direct Tension Ultimate	$MS_FS_2 = 23.35$	Shear Ultimate	$MS_FS_6 = 2.35$
Total Tension Ultimate	$MS_FS_3 = 0.46$	Bending Ultimate	$MS_FS_7 = 10$
Direct Thread shear Ultimate	$MS_FS_4 = 18.45$	Combined shear, tension and bending ultimate	$MS_FS_8 = 0.41$

Determination of the smallest fail-safe margin of safety for the bolt, and the failure mode:

$MSbolt_FS = 0.17$ $Failure_Mode_FS =$ **"Total Thread Shear Ultimate (Nut)"**

Prepared By	Name	Date	Engineering and Science Contract Group	File Name
	Kent Peters	08/21/2008		DS TRD 2.70in Bathtub to Bumper
Checked By	C. Bala		*Structural Analysis Section*	Drawing No. SDG39137848
Title	Debris Shield Fastener Joint Analysis for Bolt/Washer with Nutplate/No Washer TRD Side - Bathtub Bracket to Outer Bumper			

Bolt Hole Analysis

Recall loads from bolt calculation

Safety Factors	SFu = **2.000**	*(Ultimate)*	SFy = **1.250**	*(Yield)*
	FF = **1.150**	*(Fitting Factor)*		
Input Loads	V = **489** lbf	*(Shear Load)*	P = **49.800** lbf	*(Axial Load)*
Bolt calc results	Pb = **2019** lbf	*(Max Bolt Load)*		
Dimensions	L = **0.526** in	*(Length of Bolt)*	twh = **0.032** in	*(Thickness of Washer)*

Shear Tear-Out Check

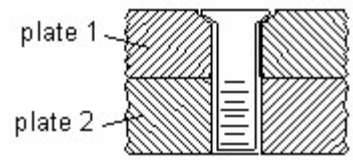

Recall bolt hole dimensions

$tf_1 := tf1$ $\quad tf_1 = \mathbf{0.080}\,in$ *(Entire Thickness of Flange 1)* $\quad Tf1E = \mathbf{0.980}$

$tf_2 := tf2$ $\quad tf_2 = \mathbf{0.100}\,in$ *(Entire Thickness of Flange 2)* $\quad Tf2E = \mathbf{0.960}$

$edge_1 := edge1$ $\quad edge_1 = \mathbf{0.500}\,in$ *(Edge Distance for Hole in Plate 1)*

$edge_2 := edge2$ $\quad edge_2 = \mathbf{0.566}\,in$ *(Edge Distance for Hole in Plate 2)*

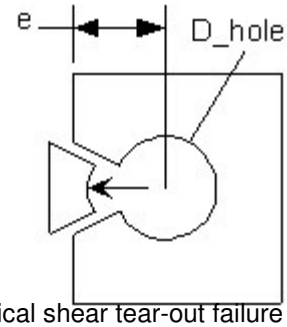

Typical shear tear-out failure

$D = \mathbf{0.190}\,in$ *(Diameter of Bolt)*

$D_shank = \mathbf{0.188}\,in$ *(Min. Shank Diameter of Bolt)*

$D_hole = \mathbf{0.226}\,in$ *(Diameter of Hole)*

Shear area of the mating components (Ref. Analysis & Design of Flight Vehicle Structures, Bruhn, Pg. D1.5)

$$A_{shrpl} := \overrightarrow{\left[2 \cdot tf \cdot \left(edge - \frac{1}{2} D_hole\right)\right]} \qquad \begin{pmatrix} Plate1 \\ Plate2 \end{pmatrix} \qquad A_{shrpl} = \begin{pmatrix} \mathbf{0.062} \\ \mathbf{0.091} \end{pmatrix} in^2$$

Allowables for plates that fastener goes through

$Fsu_1 := Tf1E \cdot \mathbf{27} \cdot ksi$ $\quad Fsu_1 = \mathbf{26.460}\,ksi$ *(Ultimate Shear Allowable for Plate 1)*

$Fsu_2 := Tf2E \cdot \mathbf{36} \cdot ksi$ $\quad Fsu_2 = \mathbf{34.560}\,ksi$ *(Ultimate Shear Allowable for Plate 2)*

$$P_{su} := \overrightarrow{\left(A_{shrpl} \cdot Fsu\right)} \qquad P_{su} = \begin{pmatrix} \mathbf{1638} \\ \mathbf{3131} \end{pmatrix} lbf$$ *(Shear Ultimate Allowable)*

MS for Shear Tear-Out

$$MS_{su} := \overrightarrow{\left(\frac{P_{su}}{V \cdot SFu \cdot FF} - 1\right)} \qquad \begin{pmatrix} Plate1 \\ Plate2 \end{pmatrix} \qquad MS_{su} = \begin{pmatrix} \mathbf{0.46} \\ \mathbf{1.78} \end{pmatrix}$$

$$MS_{bh_1} := \min\left(MS_{su}\right)$$

$MS_{bh_1} = \mathbf{0.457}$ ***... Shear Tear-Out MS***

Bearing Check

Recall bolt hole dimensions

$tf_1 = 0.080\,in$ *(Thickness of Plate 1)*

$tf_2 = 0.100\,in$ *(Thickness of Plate 2)*

$edge_1 = 0.500\,in$ *(Edge Distance for thru Hole in Plate 1)*

$edge_2 = 0.566\,in$ *(Edge Distance for tapped Hole in Plate 2)*

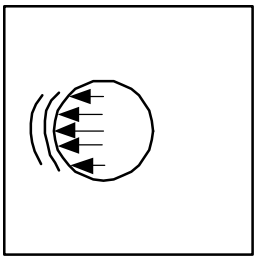

Typical Bearing Failure

$A_{br} := \overrightarrow{(tf \cdot \min(D, D_shank))}$ $\begin{pmatrix} \text{Plate1} \\ \text{Plate2} \end{pmatrix}$ $A_{br} = \begin{pmatrix} 0.015 \\ 0.019 \end{pmatrix} in^2$ *(Bearing Areas)*

$e_D := \frac{\overrightarrow{edge}}{D_hole}$ $e_D = \begin{pmatrix} 2.212 \\ 2.504 \end{pmatrix}$ *(e/D for Plates)*

Allowables for plates that fastener goes through

Bearing strength at e/D = 1.5

$Fbru15_1 := Tf1E \cdot 67 ksi$ $Fbru15_1 = 65.66\,ksi$

$Fbry15_1 := Tf1E \cdot 50 \cdot ksi$ $Fbry15_1 = 49\,ksi$

$Fbru15_2 := Tf2E \cdot 99 ksi$ $Fbru15_2 = 95.04\,ksi$

$Fbry15_2 := Tf2E \cdot 83 \cdot ksi$ $Fbry15_2 = 79.68\,ksi$

Bearing strength at e/D = 2.0

$Fbru20_1 := Tf1E \cdot 88 ksi$ $Fbru20_1 = 86.24\,ksi$

$Fbry20_1 := Tf1E \cdot 58 \cdot ksi$ $Fbry20_1 = 56.840\,ksi$

$Fbru20_2 := Tf2E \cdot 126 ksi$ $Fbru20_2 = 120.96\,ksi$

$Fbry20_2 := Tf2E \cdot 96 \cdot ksi$ $Fbry20_2 = 92.160\,ksi$

Modified bearing strength

$$Fbru_m_1 := if\left[e_D_1 > 2.0, Fbru20_1, if\left[(e_D_1 > 1.5)\cdot(e_D_1 < 2.0), Fbru15_1 + \frac{e_D_1 - 1.5}{2.0 - 1.5}\cdot(Fbru20_1 - Fbru15_1), \left[Fbru15_1\cdot(e_D_1 - 0.5)\right]\right]\right]$$

$$Fbru_m_2 := if\left[e_D_2 > 2.0, Fbru20_2, if\left[(e_D_2 > 1.5)\cdot(e_D_2 < 2.0), Fbru15_2 + \frac{e_D_2 - 1.5}{2.0 - 1.5}\cdot(Fbru20_2 - Fbru15_2), \left[Fbru15_2\cdot(e_D_2 - 0.5)\right]\right]\right]$$

$$Fbry_m_1 := if\left[e_D_1 > 2.0, Fbry20_1, if\left[(e_D_1 > 1.5)\cdot(e_D_1 < 2.0), Fbry15_1 + \frac{e_D_1 - 1.5}{2.0 - 1.5}\cdot(Fbry20_1 - Fbry15_1), \left[Fbry15_1\cdot(e_D_1 - 0.5)\right]\right]\right]$$

$$Fbry_m_2 := if\left[e_D_2 > 2.0, Fbry20_2, if\left[(e_D_2 > 1.5)\cdot(e_D_2 < 2.0), Fbry15_2 + \frac{e_D_2 - 1.5}{2.0 - 1.5}\cdot(Fbry20_2 - Fbry15_2), \left[Fbry15_2\cdot(e_D_2 - 0.5)\right]\right]\right]$$

$Fbru_m = \begin{pmatrix} 86.24 \\ 120.96 \end{pmatrix} \begin{pmatrix} \text{Plate1} \\ \text{Plate2} \end{pmatrix}$ *(Ultimate)*

$Fbry_m = \begin{pmatrix} 56.84 \\ 92.16 \end{pmatrix} \begin{pmatrix} \text{Plate1} \\ \text{Plate2} \end{pmatrix}$ *(Yield)*

$P_{bru} := \overrightarrow{(A_{br} \cdot Fbru_m)}$ $\quad P_{bru} = \begin{pmatrix} 1300 \\ 2280 \end{pmatrix} lbf$ *(Bearing Ultimate Allowable)*

$P_{bry} := \overrightarrow{(A_{br} \cdot Fbry_m)}$ $\quad P_{bry} = \begin{pmatrix} 857 \\ 1737 \end{pmatrix} lbf$ *(Bearing Yield Allowable)*

MS for Bearing Failure

$\mathbf{MS_{bru}} := \overrightarrow{\left(\frac{P_{bru}}{V \cdot SFu \cdot FF} - 1\right)}$ $\quad \mathbf{MS_{bru}} = \begin{pmatrix} 0.156 \\ 1.027 \end{pmatrix}$ $\begin{pmatrix} \text{Plate1} \\ \text{Plate2} \end{pmatrix}$

$MS_{bh_2} := \min(\mathbf{MS_{bru}})$

$MS_{bh_2} = \mathbf{0.156}$ ***... Bearing MS based on Ultimate Strength***

$MS_{bry} := \overrightarrow{\left(\frac{P_{bry}}{V \cdot SFy \cdot FF} - 1\right)}$ $\quad MS_{bry} = \begin{pmatrix} 0.22 \\ 1.47 \end{pmatrix}$ $\begin{pmatrix} \text{Plate1} \\ \text{Plate2} \end{pmatrix}$

$MS_{bh_3} := \min(MS_{bry})$

$MS_{bh_3} = \mathbf{0.219}$ ***... Bearing MS based on Yield Strength***

Prepared By	Name Kent Peters	Date 08/21/2008	Engineering and Science Contract Group *Structural Analysis Section*	File Name DS TRD Right Angle to Bumper
Checked By	C. Bala			Drawing No. SDG39137848
Title	Debris Shield Fastener Joint Analysis for Bolt/Washer with Nutplate/No Washer TRD Side - Right Angle to Outer Bumper			

CHECK

Note: Figure is for reference only.
Not to scale. Actual joint made differ.
Washer may be on nut side, head side, or both

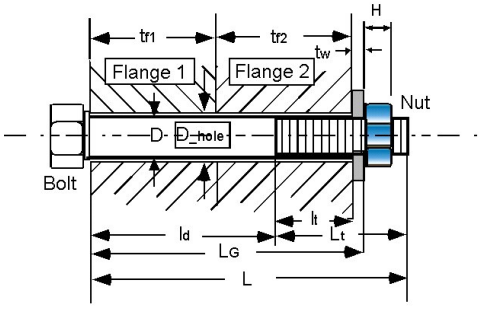

Bolt := **"NAS1133E4, .1900-32, 0.526 L, A-286"**

Washer := **"NAS1149E0332R"**

Nut := **"MS21076L3N"**

Flange_1 := **"Right Angle Bracket"**
Part_Number_1 := **"SDG39137848-003"**
Material_1 := **"AL ALY 6061-T651"**

Flange_2 := **"Outer Bumper"**
Part_Number_2 := **"SEG39137851"**
Material_2 := **"AL ALY 2219-T87"**

Minimum edge distance of flange one — edge1 := **.375**·in

Minimum edge distance of flange two — edge2 := **.44**·in

Loads (reference)

Applied tensile load — P := **49.8**lbf

Applied shear load — V := **489**lbf

Applied bending moment — M := **0**in·lbf

(Worst case combination)

Factors of Safety (reference)

SFu := **2.00** *(Ultimate)*

SFy := **1.25** *(Yield)*

FF := **1.15** *(Fitting factor)*

SFsep := **1.20** *(Joint Separation)*

Temperature data (reference)

Assembly — Temp_initial := **70**·deg

Temp_max := **140**·deg *(Maximum)*

Temp_min := **–76**·deg *(Minimum)*

Note: these are maximum temperatures that hardware sees / if maximum load occurs at a different temperature this will be conservative

Bolt Data (Bolt = **"NAS1133E4, .1900-32, 0.526 L, A-286"**)

Nominal diameter of bolt — D := **.19**·in

Number of threads/inch — Nt := **32**·$\frac{1}{in}$

Shank diameter of bolt — D_shank := **.1885**·in

Note: if there is a retainer groove in the fastener, this should be the calculated diameter to give an equivalent cross sectional area

Total length of bolt — L := **.526**·in

Threaded length — Lt := **.276**·in *(If bolt is fully threaded, input Lt = L)*

Bolt head dia. across flats — dw := **.357**·in *(dia of pressure boss if it exists, otherwise dia of head)*

Bolt head height — bh := **.122**·in *(head height is 0 if bolt is flat head)*

Bolt Data cont. (Bolt = **"NAS1133E4, .1900-32, 0.526 L, A-286"**)

Fri Apr 27 14:15:35 2007

Thread data lookup table is hidden

This file uses the data shown in \\escfil02\2i11_mathcad\8307_bolts\Rev_D\thread_data.mcd

Temperature correction factor for bolt strength: $TSu_bolt := \mathbf{.96}$ $TSy_bolt := \mathbf{.96}$ *(MMPDS-03, Fig. 6.2.1.1.1.)*

Bolt ultimate tensile allowable stress: $Ftu_bolt := \mathbf{160000} \cdot psi$ $Fty_bolt := \mathbf{120000} \cdot psi$

Bolt ultimate shear allowable stress: $Fsu_bolt := \mathbf{0.6} \cdot Ftu_bolt$

Temperature correction factor for bolt modulus: $TE_bolt := \mathbf{.98}$ *(MMPDS-03, Fig. 6.2.1.1.4(a).)*

Modulus of elasticity of bolt: $E_bolt := \left(\mathbf{29.1} \cdot \mathbf{10}^{6} \cdot psi\right)$ *(MMPDS-03, Fig. 6.2.1.0(b).)*

Thermal coefficients for bolt

$\beta_bolt_hot := \mathbf{9.1} \cdot \mathbf{10}^{-6} \cdot \frac{\frac{in}{in}}{deg}$ $\beta_bolt_cold := \mathbf{8.5} \cdot \mathbf{10}^{-6} \cdot \frac{\frac{in}{in}}{deg}$ *(MMPDS-03, Fig. 6.2.1.0.)*

Washer Data (Washer = **"NAS1149E0332R"**)

Thickness of washers:

head $twh := \mathbf{.032} \cdot in$

nut $twn := \mathbf{0.0} \cdot in$

(these are total washer thickness, if there are more than one)

Diameter of washer under head:

Outer $Dwoh := \mathbf{.438} in$

Inner $Dwih := \mathbf{.203} \cdot in$

Diameter of washer under nut:

Outer $Dwon := \mathbf{0.0} in$

Inner $Dwin := \mathbf{0.0} \cdot in$

Note: If there is no washer - tw's, Dwo's and Dwi's should be zero

Modulus of elasticity:

head $E_washerh := \left(\mathbf{29.1} \cdot \mathbf{10}^{6} \cdot psi\right)$

nut $E_washern := \left(\mathbf{0.0} \cdot \mathbf{10}^{6} \cdot psi\right)$

Temperature correction factor for modulus:

head $TE_washerh := \mathbf{.98}$

nut $TE_washern := \mathbf{0.0}$

(same as bolt)

Nut Data (Nut = **"MS21076L3N"**)

Height of nut: $H := \mathbf{.250} \cdot in$

Nut dia. across flats: $Dn := \mathbf{.290} \cdot in$

Temperature correction factor for nut strength: $TS_nut := \mathbf{.96}$ *(same as bolt)*

Ultimate allowable stress, tensile: $Ftu_nut := \mathbf{125000} \cdot psi$ $Fsu_nut := \mathbf{0.6} \cdot Ftu_nut$ *(Shear)*

Ultimate axial strength of nut: $Ptu_nut := \mathbf{2460} \cdot lbf$

Prepared By	Name	Date	Engineering and Science Contract Group	File Name
	Kent Peters	08/21/2008		DS TRD Right Angle to Bumper
Checked By	C. Bala		*Structural Analysis Section*	Drawing No. SDG39137848
Title	Debris Shield Fastener Joint Analysis for Bolt/Washer with Nutplate/No Washer TRD Side - Right Angle to Outer Bumper			

Flange data (Stiffness of the joint depends upon number of members in the grip of the fasteners & their material properties)

Diameter of thru hole $D_hole := .226 \cdot in$

Flange_1 = **"Right Angle Bracket"**

Flange_2 = **"Outer Bumper"**

Material_1 = **"AL ALY 6061-T651"**

Material_2 = **"AL ALY 2219-T87"**

Thickness of flanges

$tf1 := .15 \cdot in$

$tf2 := .10 in$

Compressive Modulus of elastici

$E_flange1 := (10.1 \cdot 10^6 \cdot psi)$

$E_flange2 := (10.8 \cdot 10^6 \cdot psi)$

Temperature correction factor (modul

$Tf1E := .98$

$Tf2E := .96$

Coefficient of thermal expansion for flanges

$\beta_flange1_hot := 12.8 \cdot 10^{-6} \cdot \frac{\frac{in}{in}}{deg}$

$\beta_flange2_hot := 12.4 \cdot 10^{-6} \cdot \frac{\frac{in}{in}}{deg}$

$\beta_flange1_cold := 12.1 \cdot 10^{-6} \cdot \frac{\frac{in}{in}}{deg}$

$\beta_flange2_cold := 11.6 \cdot 10^{-6} \cdot \frac{\frac{in}{in}}{deg}$

Torque/Preload data

Maximum torque $Tmax := 44.4 \cdot in \cdot lbf$

Minimum torque $Tmin := 37.8 in \cdot lbf$

Joint is lubed/dry

Preload Uncertainty $u := 0.25$ *(0.25 lubed/0.35 dry)*

Torque coefficient $k := 0.15$ *(0.15 lubed/0.20 dry)*

Loading plane factor $n := 0.5$

Stiffness and Margin calculations are hidden

This file uses the calculations shown in \\escfil02\2i11_mathcad\8307_bolts\Rev_D\bolt_stiffness_nut.mcd

Fri Apr 27 14:15:49 2007

Bolt Load data

Bolt/joint stiffness factor	= **0.349**	Preload due to temperature	Pthr_pos = **59.6** lbf
Max. preload	PLDmax = **2007** lbf		Pthr_neg = **−119.3** lbf
Min. preload	PLDmin = **778** lbf		
Nom. preload	PLDnom = **1558** lbf	Uncertainty factor	u = **0.250**
Preload to yield ratio (nom.)	PLDratio = **0.703**	Torque coefficient	k = **0.150**
Joint separation load	Psep = **59.760** lbf	Loading plane factor	n = **0.500**

Bolt Load data (cont.)

Applied Tensile load on the bolt: P = **49.800** lbf

Applied shear on the bolt: V = **489.000** lbf

Applied bending on the bolt: M = **0.000** in·lbf

Max. load on the bolt with preload and Factor of safety

Pb = **2027** lbf *(ultimate)*

Pby = **2019** lbf *(yield)*

Max. load on the bolt with preload WithOut factor of safety

Pbapp = **2017** lbf

Bolt ultimate tensile strength: PAt = **2957** lbf

Thread pullout strength: PAs = **2362** lbf

Nut ultimate tensile strength: Ptu_nut = **2362** lbf

Bolt shear strength: VAu = **2572** lbf

Bolt bending strength: MAu = **61** in·lbf

General Checks

length_check = **"Bolt length should be increased! nut is fully threaded, but does not extend past nut"**

cone_check = **"Joint pressure cone does not extend pass flange edge"**

preload_check = **"Nominal preload >= 65% of bolt yield strength"**

washer_check = **"Washers under head and nut do not extend past flanges"**

Summary of Margins for bolt:

Joint separation	MS_1 = **12.72**	Direct Thread shear Ultimate	MS_6 = **19.62**
Direct Tension Ultimate	MS_2 = **24.81**	Total Thread shear Ultimate	MS_7 = **0.17**
Direct Tension Yield	MS_3 = **29.98**	Shear Ultimate	MS_8 = **1.29**
Total Tension Ultimate	MS_4 = **0.46**	Bending Ultimate	MS_9 = **100**
Total Tension Yield	MS_5 = **0.1**	Combined shear, tension and bending ultimate	MS_{10} = **0.31**

Smallest margin of safety for the bolt, and the failure mode:

MSbolt = **0.1**

Failure_Mode = **"Total Tension Yield"**

Prepared By	Name	Date	Engineering and Science Contract Group	File Name
	Kent Peters	08/21/2008		DS TRD Right Angle to Bumper
Checked By	C. Bala		*Structural Analysis Section*	Draw ing No. SDG39137848
Title	Debris Shield Fastener Joint Analysis for Bolt/Washer with Nutplate/No Washer TRD Side - Right Angle to Outer Bumper			

Fail-safe Analysis

Fail-safe Loads

Applied tensile load $P_FS := 105.6 \cdot lbf$

Applied shear load $V_FS := 666.6 \cdot lbf$

Applied bending moment $M_FS := 0 \cdot in \cdot lbf$

Fail-safe Factors of Safety

Ultimate $SFu_FS := 1.0$

Joint Separation $SFsep_FS := 1.0$

Fail Safe Margin calculations are hidden / stiffness & allowable data is not recalculated

This file uses the calculations shown in \\escfil02\2i11_mathcad\8307_bolts\Rev_D\bolt_stiffness_nut_FS.mcd

Fri Apr 27 14:16:05 2007

Bolt Fail-safe Load data

Joint separation load $Psep_FS = 105.600$ lbf

Max. load on the bolt(ultimate) $Pb_FS = 2028.1$ lbf

Summary of fail-safe Margins for bolt:

Joint separation	$MS_FS_1 = 6.76$	Total Thread shear Ultimate	$MS_FS_5 = 0.16$
Direct Tension Ultimate	$MS_FS_2 = 23.35$	Shear Ultimate	$MS_FS_6 = 2.35$
Total Tension Ultimate	$MS_FS_3 = 0.46$	Bending Ultimate	$MS_FS_7 = 10$
Direct Thread shear Ultimate	$MS_FS_4 = 18.45$	Combined shear, tension and bending ultimate	$MS_FS_8 = 0.4$

Determination of the smallest fail-safe margin of safety for the bolt, and the failure mode:

$MSbolt_FS = 0.16$ $Failure_Mode_FS =$ **"Total Thread Shear Ultimate (Nut)"**

Prepared By	Name	Date	Engineering and Science Contract Group	File Name
	Kent Peters	08/21/2008		DS TRD Right Angle to Bumper
Checked By	C. Bala		*Structural Analysis Section*	Drawing No. SDG39137848
Title	Debris Shield Fastener Joint Analysis for Bolt/Washer with Nutplate/No Washer TRD Side - Right Angle to Outer Bumper			

Bolt Hole Analysis

Recall loads from bolt calculation

Safety Factors	SFu = **2.000**	*(Ultimate)*	SFy = **1.250**	*(Yield)*
	FF = **1.150**	*(Fitting Factor)*		
Input Loads	V = **489** lbf	*(Shear Load)*	P = **49.800** lbf	*(Axial Load)*
Bolt calc results	Pb = **2027** lbf	*(Max Bolt Load)*		
Dimensions	L = **0.526** in	*(Length of Bolt)*	twh = **0.032** in	*(Thickness of Washer)*

Shear Tear-Out Check

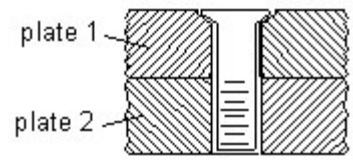

Recall bolt hole dimensions

$tf_1 := tf1$ $\quad tf_1 = \mathbf{0.150}\,in$ *(Entire Thickness of Flange 1)* $\quad Tf1E = \mathbf{0.980}$

$tf_2 := tf2$ $\quad tf_2 = \mathbf{0.100}\,in$ *(Entire Thickness of Flange 2)* $\quad Tf2E = \mathbf{0.960}$

$edge_1 := edge1$ $\quad edge_1 = \mathbf{0.375}\,in$ *(Edge Distance for Hole in Plate 1)*

$edge_2 := edge2$ $\quad edge_2 = \mathbf{0.440}\,in$ *(Edge Distance for Hole in Plate 2)*

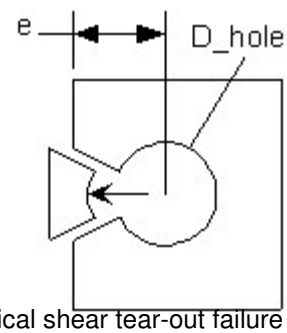

Typical shear tear-out failure

$D = \mathbf{0.190}\,in$ *(Diameter of Bolt)*

$D_shank = \mathbf{0.188}\,in$ *(Min. Shank Diameter of Bolt)*

$D_hole = \mathbf{0.226}\,in$ *(Diameter of Hole)*

Shear area of the mating components (Ref. Analysis & Design of Flight Vehicle Structures, Bruhn, Pg. D1.5)

$$A_{shrpl} := \overrightarrow{\left[2 \cdot tf \cdot \left(edge - \frac{1}{2} D_hole\right)\right]} \qquad \begin{pmatrix} Plate1 \\ Plate2 \end{pmatrix} \qquad A_{shrpl} = \begin{pmatrix} \mathbf{0.079} \\ \mathbf{0.065} \end{pmatrix} in^2$$

Allowables for plates that fastener goes through

$Fsu_1 := Tf1E \cdot \mathbf{27} \cdot ksi$ $\quad Fsu_1 = \mathbf{26.460}\,ksi$ *(Ultimate Shear Allowable for Plate 1)*

$Fsu_2 := Tf2E \cdot \mathbf{36} \cdot ksi$ $\quad Fsu_2 = \mathbf{34.560}\,ksi$ *(Ultimate Shear Allowable for Plate 2)*

$$P_{su} := \overrightarrow{\left(A_{shrpl} \cdot Fsu\right)} \qquad P_{su} = \begin{pmatrix} \mathbf{2080} \\ \mathbf{2260} \end{pmatrix} lbf$$ *(Shear Ultimate Allowable)*

MS for Shear Tear-Out

$$MS_{su} := \overrightarrow{\left(\frac{P_{su}}{V \cdot SFu \cdot FF} - 1\right)} \qquad \begin{pmatrix} Plate1 \\ Plate2 \end{pmatrix} \qquad MS_{su} = \begin{pmatrix} \mathbf{0.85} \\ \mathbf{1.01} \end{pmatrix}$$

$$MS_{bh_1} := \min\left(MS_{su}\right)$$

$MS_{bh_1} = \mathbf{0.849}$ ***... Shear Tear-Out MS***

Bearing Check

Recall bolt hole dimensions

$tf_1 = \mathbf{0.150}\,in$ *(Thickness of Plate 1)*

$tf_2 = \mathbf{0.100}\,in$ *(Thickness of Plate 2)*

$edge_1 = \mathbf{0.375}\,in$ *(Edge Distance for thru Hole in Plate 1)*

$edge_2 = \mathbf{0.440}\,in$ *(Edge Distance for tapped Hole in Plate 2)*

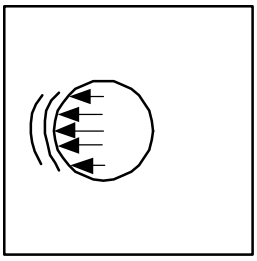

Typical Bearing Failure

$A_{br} := \overrightarrow{(tf \cdot \min(D, D_shank))}$ $\begin{pmatrix} \text{Plate1} \\ \text{Plate2} \end{pmatrix}$ $A_{br} = \begin{pmatrix} \mathbf{0.028} \\ \mathbf{0.019} \end{pmatrix} in^2$ *(Bearing Areas)*

$e_D := \frac{\overrightarrow{edge}}{D_hole}$ $e_D = \begin{pmatrix} \mathbf{1.659} \\ \mathbf{1.947} \end{pmatrix}$ *(e/D for Plates)*

Allowables for plates that fastener goes through

Bearing strength at e/D = 1.5

$Fbru15_1 := Tf1E \cdot \mathbf{67}ksi$ $Fbru15_1 = \mathbf{65.66}\,ksi$

$Fbry15_1 := Tf1E \cdot \mathbf{50} \cdot ksi$ $Fbry15_1 = \mathbf{49}\,ksi$

$Fbru15_2 := Tf2E \cdot \mathbf{99}ksi$ $Fbru15_2 = \mathbf{95.04}\,ksi$

$Fbry15_2 := Tf2E \cdot \mathbf{83} \cdot ksi$ $Fbry15_2 = \mathbf{79.68}\,ksi$

Bearing strength at e/D = 2.0

$Fbru20_1 := Tf1E \cdot \mathbf{88}ksi$ $Fbru20_1 = \mathbf{86.24}\,ksi$

$Fbry20_1 := Tf1E \cdot \mathbf{58} \cdot ksi$ $Fbry20_1 = \mathbf{56.840}\,ksi$

$Fbru20_2 := Tf2E \cdot \mathbf{126}ksi$ $Fbru20_2 = \mathbf{120.96}\,ksi$

$Fbry20_2 := Tf2E \cdot \mathbf{96} \cdot ksi$ $Fbry20_2 = \mathbf{92.160}\,ksi$

Modified bearing strength

$$Fbru_m_1 := if\left[e_D_1 > \mathbf{2.0}, Fbru20_1, if\left[(e_D_1 > \mathbf{1.5}) \cdot (e_D_1 < \mathbf{2.0}), Fbru15_1 + \frac{e_D_1 - \mathbf{1.5}}{\mathbf{2.0} - \mathbf{1.5}} \cdot (Fbru20_1 - Fbru15_1), \left[Fbru15_1 \cdot (e_D_1 - \mathbf{0.5})\right]\right]\right]$$

$$Fbru_m_2 := if\left[e_D_2 > \mathbf{2.0}, Fbru20_2, if\left[(e_D_2 > \mathbf{1.5}) \cdot (e_D_2 < \mathbf{2.0}), Fbru15_2 + \frac{e_D_2 - \mathbf{1.5}}{\mathbf{2.0} - \mathbf{1.5}} \cdot (Fbru20_2 - Fbru15_2), \left[Fbru15_2 \cdot (e_D_2 - \mathbf{0.5})\right]\right]\right]$$

$$Fbry_m_1 := if\left[e_D_1 > \mathbf{2.0}, Fbry20_1, if\left[(e_D_1 > \mathbf{1.5}) \cdot (e_D_1 < \mathbf{2.0}), Fbry15_1 + \frac{e_D_1 - \mathbf{1.5}}{\mathbf{2.0} - \mathbf{1.5}} \cdot (Fbry20_1 - Fbry15_1), \left[Fbry15_1 \cdot (e_D_1 - \mathbf{0.5})\right]\right]\right]$$

$$Fbry_m_2 := if\left[e_D_2 > \mathbf{2.0}, Fbry20_2, if\left[(e_D_2 > \mathbf{1.5}) \cdot (e_D_2 < \mathbf{2.0}), Fbry15_2 + \frac{e_D_2 - \mathbf{1.5}}{\mathbf{2.0} - \mathbf{1.5}} \cdot (Fbry20_2 - Fbry15_2), \left[Fbry15_2 \cdot (e_D_2 - \mathbf{0.5})\right]\right]\right]$$

$Fbru_m = \begin{pmatrix} \mathbf{72.216} \\ \mathbf{118.207} \end{pmatrix} \begin{pmatrix} \text{Plate1} \\ \text{Plate2} \end{pmatrix}$ *(Ultimate)*

$Fbry_m = \begin{pmatrix} \mathbf{51.498} \\ \mathbf{90.835} \end{pmatrix} \begin{pmatrix} \text{Plate1} \\ \text{Plate2} \end{pmatrix}$ *(Yield)*

$P_{bru} := \overrightarrow{(A_{br} \cdot Fbru_m)}$ $\quad P_{bru} = \begin{pmatrix} 2042 \\ 2228 \end{pmatrix} lbf$ *(Bearing Ultimate Allowable)*

$P_{bry} := \overrightarrow{(A_{br} \cdot Fbry_m)}$ $\quad P_{bry} = \begin{pmatrix} 1456 \\ 1712 \end{pmatrix} lbf$ *(Bearing Yield Allowable)*

MS for Bearing Failure

$\mathbf{MS_{bru}} := \overrightarrow{\left(\frac{P_{bru}}{V \cdot SFu \cdot FF} - 1\right)}$ $\quad \mathbf{MS_{bru}} = \begin{pmatrix} 0.816 \\ 0.981 \end{pmatrix}$ $\begin{pmatrix} \text{Plate1} \\ \text{Plate2} \end{pmatrix}$

$MS_{bh_2} := \min(\mathbf{MS_{bru}})$

$MS_{bh_2} = 0.816$ ***... Bearing MS based on Ultimate Strength***

$MS_{bry} := \overrightarrow{\left(\frac{P_{bry}}{V \cdot SFy \cdot FF} - 1\right)}$ $\quad MS_{bry} = \begin{pmatrix} 1.07 \\ 1.44 \end{pmatrix}$ $\begin{pmatrix} \text{Plate1} \\ \text{Plate2} \end{pmatrix}$

$MS_{bh_3} := \min(MS_{bry})$

$MS_{bh_3} = 1.071$ ***... Bearing MS based on Yield Strength***

Prepared By	Name	Date	Engineering and Science Contract Group	File Name
	Kent Peters	07/29/2008		DS TRD Inner Bumper to Standoff B.xmcdz
Checked By	C. Bala		*Structural Analysis Section*	Drawing No. SEG39137851
Title	**Debris Shield Fastener Joint Analysis for Bolt/Washer with Insert Port (TRD) - Inner Bumper to Standoff B**			

CHECK

Note: Figure is for reference only.
Not to scale. Actual joint made differ.
Washer may be on nut side, head side, or both

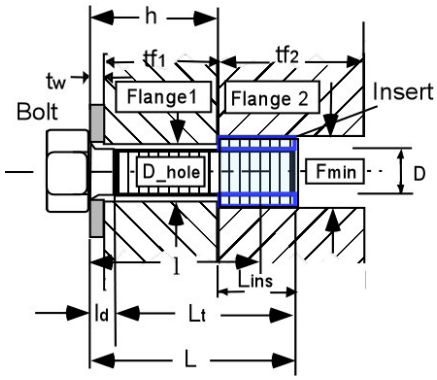

Bolt := **"NAS1004-1, .2500-28, Length, A-286, 140ksi"**

Washer := **"NAS1149E0332R"**

Insert := **"NASM21209F4-20L, .250-28, Assume A-286, Dry Film Lubricant"**

Flange_1 := **"Debris Shield Inner Plate "**
Part_Number_1 := **"SDG39137858-001"**
Material_1 := **"AL ALY2219-T87 "**

Flange_2 := **"Debris Shield Standoff B "**
Part_Number_2 := **"SDG39137855 "**
Material_2 := **"AL ALY 6061-T651 "**

Minimum edge distance of flange 1 edge1 := **1.162**·in

Minimum edge distance of flange 2 edge2 := **0.364**·in

Loads (reference)

Applied tensile load P := **11.7**lbf

Applied shear load V := **25.4**lbf

Applied bending moment M := **0**in·lbf

(Worst case combination)

Factors of Safety (reference)

SFu := **2.00** *(Ultimate)*

SFy := **1.25** *(Yield)*

FF := **1.15** *(Fitting factor)*

SFsep := **1.20** *(Joint Separation)*

Temperature Data (reference)

Assembly Temp_initial := **70**·deg

Temp_max := **140**·deg *(Maximum)*

Temp_min := **−76**·deg *(Minimum)*

Note: these are maximum temperatures that hardware sees / if maximum load occurs at a different temperature this will be conservative

Bolt Data (Bolt = "NAS1004-1, .2500-28, Length, A-286, 140ksi")

Nominal diameter of bolt D := **.2500**·in

Number of threads/inch Nt := **28**·$\frac{1}{in}$

Shank diameter of bolt D_shank := **.2470**·in

Note: if there is a retainer groove in the fastener, this should be the calculated diameter to give an equivalent cross sectional area

Total length of bolt L := **.606**·in

Threaded length Lt := **.544**·in *(If bolt is fully threaded, input Lt = L)*

Bolt head dia. across flats dw := **.398**·in *(dia of pressure boss if it exists, otherwise dia of head)*

Bolt head height bh := **.156**·in *(head height is 0 if bolt is flat head)*

Bolt Data Continued (Bolt = **"NAS1004-1, .2500-28, Length, A-286, 140ksi"** **)**

Thread data lookup table is hidden
This file uses the data shown in \\escfil02\2i11_mathcad\8307_bolts\Rev_D\thread_data.mcd

Fri Apr 27 14:11:39 2007

Temperature correction factor for bolt strength $TSu_bolt := .98$ $TSy_bolt := .98$

Bolt ultimate tensile allowable stress $Ftu_bolt := 140000 \cdot psi$ $Fty_bolt := 95000 \cdot psi$

Bolt ultimate shear allowable stress $Fsu_bolt := 0.6 \cdot Ftu_bolt$

Temperature correction factor for bolt modulus $TE_bolt := .98$

Modulus of elasticity of bolt $E_bolt := \left(29.1 \cdot 10^{6} \cdot psi\right)$

Thermal coefficients for bolt

$\beta_bolt_hot := 9.1 \cdot 10^{-6} \cdot \frac{\frac{in}{in}}{deg}$ $\beta_bolt_cold := 8.5 \cdot 10^{-6} \cdot \frac{\frac{in}{in}}{deg}$

Washer Data (Washer = **"NAS1149E0332R"** **)**

Thickness of washers:

head $twh := 0.032 \cdot in$ *(these are total washer thickness, if there are more than one)*

Diameter of washer under head:

Outer $Dwoh := 0.438 in$ *Note: If there is no washer - tw's, Dwo's and Dwi's should be zero*

Inner $Dwih := 0.203 \cdot in$

Modulus of elasticity:

head $E_washerh := \left(29.1 \cdot 10^{6} \cdot psi\right)$

Temperature correction factor for modulus:

head $TE_washerh := .98$ *(same as bolt)*

Insert Data (Insert = **"NASM21209F4-20L, .250-28, Assume A-286, Dry Film Lubricant"** **)**

Length of insert $Lins := 0.500 \cdot in$

Min. external diameter of insert $Fmin := 0.306 \cdot in$

Depth of recess for insert $lr := 0.020 \cdot in$

Temperature correction factor for insert strength $TS_ins := .98$

Ultimate tensile allowable stress $Ftu_ins := 150000 \cdot psi$

Ultimate shear allowable stress $Fsu_ins := 0.6 \cdot Ftu_ins$

Prepared By	Name Kent Peters	Date 07/29/2008	Engineering and Science Contract Group *Structural Analysis Section*	File Name DS TRD Inner Bumper to Standoff B.xmcdz
Checked By	C. Bala			Drawing No. **SEG39137851**
Title	**Debris Shield Fastener Joint Analysis for Bolt/Washer with Insert Port (TRD) - Inner Bumper to Standoff B**			

Flange Data (Stiffness of the joint depends upon number of members in the grip of the fasteners & their material properties)

Diameter of thru hole $D_hole := 0.272 \cdot in$

Flange_1 = **"Debris Shield Inner Plate "** Flange_2 = **"Debris Shield Standoff B "**

Material_1 = **"AL ALY2219-T87 "** Material_2 = **"AL ALY 6061-T651 "**

Thickness of flanges

$tf1 := 0.060 \cdot in$ $tf2 := 0.500 in$ *(Using Length of Insert)*

Compressive Modulus of elasticity

$E_flange1 := \left(10.8 \cdot 10^{6} \cdot psi\right)$ $E_flange2 := \left(10.1 \cdot 10^{6} \cdot psi\right)$

Temperature correction factor (modulus)

$Tf1E := .96$ $Tf2E := .98$

Coefficient of thermal expansion for flanges

$\beta_flange1_hot := 12.4 \cdot 10^{-6} \cdot \frac{\frac{in}{in}}{deg}$ $\beta_flange2_hot := 12.8 \cdot 10^{-6} \cdot \frac{\frac{in}{in}}{deg}$

$\beta_flange1_cold := 11.6 \cdot 10^{-6} \cdot \frac{\frac{in}{in}}{deg}$ $\beta_flange2_cold := 12.1 \cdot 10^{-6} \cdot \frac{\frac{in}{in}}{deg}$

Shear strength of flange two, with temperature reduction $Fsu_f2 := 27000 \cdot psi$ $Tf2s := .96$ *(If unavailable, use temperature reduction factor for Ftu)*

Torque/Preload Data

Maximum torque $Tmax := 84.2 \cdot in \cdot lbf$ *(Shigley's "Mechanical Engineering Design")*

Minimum torque $Tmin := 71.6 in \cdot lbf$

Joint is lubed/dry Preload Uncertainty $u := 0.25$ *(0.25 lubed/0.35 dry)* Loading plane factor $n := 0.5$

Torque coefficient $k := 0.15$ *(0.15 lubed/0.20 dry)*

Stiffness and Margin calculations are hidden

This file uses calculations shown in \\escfil02\2i11_mathcad\8307_bolts\Rev_D\bolt_insert_stiffness.mcd

Fri Apr 27 14:11:53 2007

Bolt Load Data

Bolt/joint stiffness factor	$= 0.519$	Preload due to temperature	$Pthr_pos = 173.3\ lbf$
Max. preload	$PLDmax = 2980\ lbf$		$Pthr_neg = -350.6\ lbf$
Min. preload	$PLDmin = 941\ lbf$		
Nom. preload	$PLDnom = 2245\ lbf$	Uncertainty factor	$u = 0.250$
Preload to yield ratio (nom.)	$PLDratio = 0.684$	Torque coefficient	$k = 0.150$
Joint separation load	$Psep = 14.040\ lbf$	Loading plane factor	$n = 0.500$

Bolt Load Data Continued

Applied Tensile load on the bolt P = **11.700** lbf

Applied shear on the bolt V = **25.400** lbf

Applied bending on the bolt M = **0.000** in·lbf

Max. load on the bolt with preload and Factor of safety

Pb = **2987** lbf *(ultimate)*

Pby = **2984** lbf *(yield)*

Max. load on the bolt with preload WithOut factor of safety

Pbapp = **2983** lbf

Bolt ultimate tensile strength PAt = **4841** lbf

Thread pullout strength PAs = **6229** lbf

Bolt shear strength VAu = **2680** lbf

Bolt bending strength MAu = **134** in·lbf

General Checks

length_check = **"Bolt length is sufficient and insert fully engaged"**

cone_check = **"Joint pressure cone does not extend pass flange edge"**

preload_check = **"Nominal preload >= 65% of bolt yield strength"**

washer_check = **"Washer(s) under head do not extend past flange"**

insert_check = **"Flange two is thick enough for insert"**

Summary of Margins for Bolt

Joint separation	MS_1 = **77.73**	Direct Thread shear Ultimate	MS_6 = **230.49**
Direct Tension Ultimate	MS_2 = **178.89**	Total Thread shear Ultimate	MS_7 = **1.09**
Direct Tension Yield	MS_3 = **194.31**	Shear Ultimate	MS_8 = **44.88**
Total Tension Ultimate	MS_4 = **0.62**	Bending Ultimate	MS_9 = **100**
Total Tension Yield	MS_5 = **0.1**	Combined shear, tension and bending ultimate	MS_{10} = **0.62**

Smallest Margin of Safety for the Bolt, and the Failure Mode

MSbolt = **0.1**

Failure_Mode = **"Total Tension Yield"**

Fail-Safe Analysis

Fail-Safe Loads

Applied tensile load $P_FS := 25.2 \cdot lbf$

Applied shear load $V_FS := 57 \cdot lbf$

Applied bending moment $M_FS := 0 \cdot in \cdot lbf$

Fail-Safe Factors of Safety

Ultimate $SFu_FS := 1.0$

Joint Separation $SFsep_FS := 1.0$

Fail Safe Margin calculations are hidden / stiffness & allowable data is not recalculated
This file calculations shown in \\escfil02\2i11_mathcad\8307_bolts\Rev_D\bolt_insert_stiffness__FS.mcd

Fri Apr 27 14:12:08 2007

Bolt Fail-Safe Load Data

Joint separation load $Psep_FS = 25.200\ lbf$

Max. load on the bolt(ultimate) $Pb_FS = 2987.5\ lbf$

Summary of Fail-Safe Margins for Bolt

Joint separation	$MS_FS_1 = 42.86$	Total Thread shear Ultimate	$MS_FS_5 = 1.09$
Direct Tension Ultimate	$MS_FS_2 = 166.04$	Shear Ultimate	$MS_FS_6 = 39.89$
Total Tension Ultimate	$MS_FS_3 = 0.62$	Bending Ultimate	$MS_FS_7 = 10$
Direct Thread shear Ultimate	$MS_FS_4 = 213.96$	Combined shear, tension and bending ultimate	$MS_FS_8 = 0.62$

Smallest Fail-Safe Margin of Safety for the Bolt, and the Failure Mode:

$MSbolt_FS = 0.62$ $Failure_Mode_FS =$ **"Combined Shear Tension Bending Ultimate"**

Prepared By	Name	Date	Engineering and Science Contract Group	File Name
	Kent Peters	07/29/2008		DS TRD Inner Bumper to Standoff B.xmcdz
Checked By	C. Bala		*Structural Analysis Section*	Drawing No. SEG39137851
Title	**Debris Shield Fastener Joint Analysis for Bolt/Washer with Insert Port (TRD) - Inner Bumper to Standoff B**			

Bolt Hole Analysis

Recall loads from bolt calculation

Safety Factors $SFu = \mathbf{2.000}$ *(Ultimate)* $SFy = \mathbf{1.250}$ *(Yield)*

$FF = \mathbf{1.150}$ *(Fitting Factor)*

Input Loads $V = \mathbf{25.4}\,lbf$ *(Shear Load)* $P = \mathbf{11.700}\,lbf$ *(Axial Load)*

Bolt calc results $Pb = \mathbf{2987}\,lbf$ *(Max Bolt Load)*

Dimensions $L = \mathbf{0.606}\,in$ *(Length of Bolt)* $twh = \mathbf{0.032}\,in$ *(Thickness of Washer)*

Recall bolt hole dimensions

$tf_1 := tf1$ $tf_1 = \mathbf{0.060}\,in$ *(Entire Thickness of Flange 1)* $Tf1E = \mathbf{0.960}$

$tf_2 := tf2$ $tf_2 = \mathbf{0.500}\,in$ *(Entire Thickness of Flange 2)* $Tf2E = \mathbf{0.980}$

$edge_1 := edge1$ $edge_1 = \mathbf{1.162}\,in$ *(Edge Distance for Hole in Plate 1)*

$edge_2 := edge2$ $edge_2 = \mathbf{0.364}\,in$ *(Edge Distance for Hole in Plate 2)*

$D = \mathbf{0.250}\,in$ *(Diameter of Bolt)*

$D_shank = \mathbf{0.247}\,in$ *(Min. Shank Diameter of Bolt)*

$D_hole = \mathbf{0.272}\,in$ *(Diameter of Hole)*

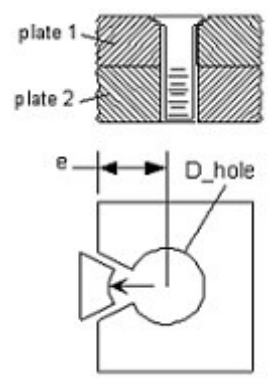

Typical shear tear-out failure

Shear Tear-Out Check

Shear area of the mating components (Ref. Analysis & Design of Flight Vehicle Structures, Bruhn, Pg. D1.5)

$$A_{shrpl} := \overrightarrow{\left[2 \cdot tf \cdot \left(edge - \frac{1}{2} D_hole\right)\right]} \qquad \begin{pmatrix} Plate1 \\ Plate2 \end{pmatrix} \qquad A_{shrpl} = \begin{pmatrix} \mathbf{0.123} \\ \mathbf{0.228} \end{pmatrix} in^2$$

Allowables for plates that fastener goes through

$Fsu_1 := Tf1E \cdot \mathbf{36} \cdot ksi$ $Fsu_1 = \mathbf{34.560}\,ksi$ *(Ultimate Shear Allowable for Plate 1)*

$Fsu_2 := Tf2E \cdot \mathbf{27} \cdot ksi$ $Fsu_2 = \mathbf{26.460}\,ksi$ *(Ultimate Shear Allowable for Plate 2)*

$$P_{su} := \overrightarrow{\left(A_{shrpl} \cdot Fsu\right)} \qquad P_{su} = \begin{pmatrix} \mathbf{4255} \\ \mathbf{6033} \end{pmatrix} lbf$$ *(Shear Ultimate Allowable)*

MS for Shear Tear-Out

$$MS_{su} := \overrightarrow{\left(\frac{P_{su}}{V \cdot SFu \cdot FF} - 1\right)} \qquad \begin{pmatrix} Plate1 \\ Plate2 \end{pmatrix} \qquad MS_{su} = \begin{pmatrix} \mathbf{71.84} \\ \mathbf{102.27} \end{pmatrix}$$

$MS_{bh_1} := \min(MS_{su})$

$MS_{bh_1} = \mathbf{71.835}$ ***... Shear Tear-Out MS***

Bearing Check

Recall bolt hole dimensions

$tf_1 = 0.060\,in$ *(Thickness of Plate 1)*

$tf_2 = 0.500\,in$ *(Thickness of Plate 2)*

$edge_1 = 1.162\,in$ *(Edge Distance for thru Hole in Plate 1)*

$edge_2 = 0.364\,in$ *(Edge Distance for tapped Hole in Plate 2)*

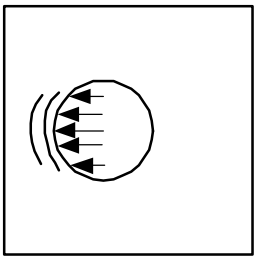

Typical Bearing Failure

$A_{br} := \overrightarrow{(tf \cdot \min(D, D_shank))}$ $\begin{pmatrix} \text{Plate1} \\ \text{Plate2} \end{pmatrix}$ $A_{br} = \begin{pmatrix} 0.015 \\ 0.123 \end{pmatrix} in^2$ *(Bearing Areas)*

$e_D := \dfrac{\overrightarrow{edge}}{D_hole}$ $e_D = \begin{pmatrix} 4.272 \\ 1.338 \end{pmatrix}$ *(e/D for Plates)*

Allowables for plates that fastener goes through

Bearing strength at e/D = 1.5

$Fbru15_1 := Tf1E \cdot 99 ksi$ $Fbru15_1 = 95.04\,ksi$

$Fbry15_1 := Tf1E \cdot 83 \cdot ksi$ $Fbry15_1 = 79.68\,ksi$

$Fbru15_2 := Tf2E \cdot 67 ksi$ $Fbru15_2 = 65.66\,ksi$

$Fbry15_2 := Tf2E \cdot 50 \cdot ksi$ $Fbry15_2 = 49\,ksi$

Bearing strength at e/D = 2.0

$Fbru20_1 := Tf1E \cdot 126 ksi$ $Fbru20_1 = 120.96\,ksi$

$Fbry20_1 := Tf1E \cdot 96 \cdot ksi$ $Fbry20_1 = 92.160\,ksi$

$Fbru20_2 := Tf2E \cdot 88 ksi$ $Fbru20_2 = 86.24\,ksi$

$Fbry20_2 := Tf2E \cdot 58 \cdot ksi$ $Fbry20_2 = 56.840\,ksi$

Modified bearing strength

$$Fbru_m_1 := if\left[e_D_1 > 2.0, Fbru20_1, if\left[(e_D_1 > 1.5)\cdot(e_D_1 < 2.0), Fbru15_1 + \frac{e_D_1 - 1.5}{2.0 - 1.5}\cdot(Fbru20_1 - Fbru15_1), \left[Fbru15_1\cdot(e_D_1 - 0.5)\right]\right]\right]$$

$$Fbru_m_2 := if\left[e_D_2 > 2.0, Fbru20_2, if\left[(e_D_2 > 1.5)\cdot(e_D_2 < 2.0), Fbru15_2 + \frac{e_D_2 - 1.5}{2.0 - 1.5}\cdot(Fbru20_2 - Fbru15_2), \left[Fbru15_2\cdot(e_D_2 - 0.5)\right]\right]\right]$$

$$Fbry_m_1 := if\left[e_D_1 > 2.0, Fbry20_1, if\left[(e_D_1 > 1.5)\cdot(e_D_1 < 2.0), Fbry15_1 + \frac{e_D_1 - 1.5}{2.0 - 1.5}\cdot(Fbry20_1 - Fbry15_1), \left[Fbry15_1\cdot(e_D_1 - 0.5)\right]\right]\right]$$

$$Fbry_m_2 := if\left[e_D_2 > 2.0, Fbry20_2, if\left[(e_D_2 > 1.5)\cdot(e_D_2 < 2.0), Fbry15_2 + \frac{e_D_2 - 1.5}{2.0 - 1.5}\cdot(Fbry20_2 - Fbry15_2), \left[Fbry15_2\cdot(e_D_2 - 0.5)\right]\right]\right]$$

$Fbru_m = \begin{pmatrix} 120.96 \\ 55.039 \end{pmatrix} ksi$ $\begin{pmatrix} \text{Plate1} \\ \text{Plate2} \end{pmatrix}$ *(Ultimate)*

$Fbry_m = \begin{pmatrix} 92.16 \\ 41.074 \end{pmatrix} ksi$ $\begin{pmatrix} \text{Plate1} \\ \text{Plate2} \end{pmatrix}$ *(Yield)*

$P_{bru} := \overrightarrow{(A_{br} \cdot Fbru_m)}$ $\quad P_{bru} = \begin{pmatrix} 1793 \\ 6797 \end{pmatrix} lbf$ *(Bearing Ultimate Allowable)*

$P_{bry} := \overrightarrow{(A_{br} \cdot Fbry_m)}$ $\quad P_{bry} = \begin{pmatrix} 1366 \\ 5073 \end{pmatrix} lbf$ *(Bearing Yield Allowable)*

MS for Bearing Failure

$\mathbf{MS_{bru}} := \overrightarrow{\left(\frac{P_{bru}}{V \cdot SFu \cdot FF} - 1\right)}$ $\quad \mathbf{MS_{bru}} = \begin{pmatrix} 29.685 \\ 115.352 \end{pmatrix}$ $\begin{pmatrix} Plate1 \\ Plate2 \end{pmatrix}$

$MS_{bh_2} := \min(\mathbf{MS_{bru}})$

$MS_{bh_2} = 29.685$ ***... Bearing MS based on Ultimate Strength***

$MS_{bry} := \overrightarrow{\left(\frac{P_{bry}}{V \cdot SFy \cdot FF} - 1\right)}$ $\quad MS_{bry} = \begin{pmatrix} 36.41 \\ 137.93 \end{pmatrix}$ $\begin{pmatrix} Plate1 \\ Plate2 \end{pmatrix}$

$MS_{bh_3} := \min(MS_{bry})$

$MS_{bh_3} = 36.407$ ***... Bearing MS based on Yield Strength***

Prepared By	Name	Date	Engineering and Science Contract Group	File Name
	Kent Peters	08/19/08		DS TRD Outer Bumper to Standoff B.xmcdz
Checked By	C. Bala		*Structural Analysis Section*	Draw ing No. SEG39137851
Title	Debris Shield Fastener 3 Flange Joint Analysis for Bolt/Washer with Insert Port (TRD) - Outer Bumper to Standoff B			

CHECK BOLTS (NAS1004-40 0.25"-28 x 1.0" L Material-A-286), Insert MS21209 F4-20L, Washer NAS1587-4C

Flange (tf1):Port External Bumper assy
Part number:SDG39137853-301
Material:2219-T87

Mid Flange (ad2):Debris shield Standoff A assy
Part number:SDG39137848-005
Material:6061-T651

Flange (tf2): Debris shield standoff B
Part number:SDG39137855-001
Material:6061-T651

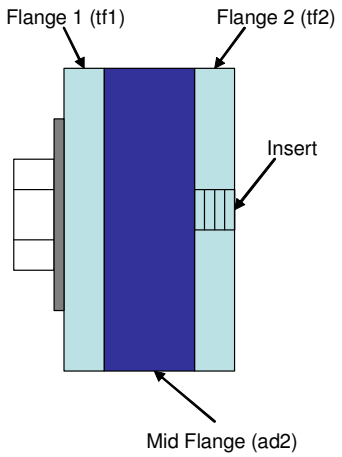

Loads

Applied tensile load $P := 11.7 \cdot lbf$

Applied shear load $V := 25.4 \cdot lbf$

Applied bending moment $M := 38.9 \cdot in \cdot lbf$

Factors of Safety

Ultimate $SFu := 2.0$ Yield $SFy := 1.25$

Joint Separation $SFsep := 1.2$ Fitting factor $FF := 1.15$

Temperature data

Assembly $Temp_initial := 70 \cdot deg$

Maximum $Temp_max := 120 \cdot deg$

Minimum $Temp_min := -200 \cdot deg$

Bolt and Insert Data

Nominal diameter of bolt $D := 0.250 \cdot in$

Number of threads/inch $Nt := 28 \cdot \frac{1}{in}$

Total length of bolt $L := 3.044 \cdot in$

Length of insert $Lins := 0.50 \cdot in$

Threaded length $Lt := 0.544 \cdot in$

Min. external diameter of insert $Fmin := 0.306 \cdot in$

(If bolt is fully threaded, input Lt = L)

Depth of recess for insert $lr := 0.02 \cdot in$

Tue Feb 15 10:38:17 AM 2005

Washer Data

Thickness of washer $tw := 0.078 \cdot in$

Outer Diameter of washer $Dw := 0.531 in$

Inner Diameter of washer $Dwi := 0.252 \cdot in$

Bolt head dia. across flats $dw := 0.398 \cdot in$

(used only if there is no washer)

Note: If there is no washer, tw, Dw, and Dwi should be zero.

Flange data

Thickness of flange 1 $tf1 := 0.10 \cdot in$

Thickness of flange 2 $tf2 := 0.66 \cdot in$

Thickness of mid flange $tmidflg_ad2 := 2.25 in$

Diameter of hole $D_hole := 0.26 \cdot in$

Outer Diameter of standoff $Dw_ad2 := 0.50 \cdot in$

Inner Diameter of standoff $Dwi_ad2 := 0.272 \cdot in$

Prepared By	Name	Date	Engineering and Science Contract Group	File Name
	Kent Peters	08/19/08		DS TRD Outer Bumper to Standoff B.xmcdz
Checked By	C. Bala		*Structural Analysis Section*	Drawing No. SEG39137851
Title	**Debris Shield Fastener 3 Flange Joint Analysis for Bolt/Washer with Insert Port (TRD) - Outer Bumper to Standoff B**			

Material Property Data

Bolt

Temperature correction factor for bolt strength ultimate $TSu_bolt := 0.98$ yield $TSy_bolt := 0.98$

Bolt ultimate tensile allowable stress $Ftu_bolt := 140000 \cdot psi$

Bolt ultimate shear allowable stress $Fsu_bolt := 0.6 \cdot Ftu_bolt$

Bolt yield tensile allowable $Fty_bolt := 95000 \cdot psi$

Temperature correction factor for bolt modulus $TE_bolt := 0.94$

Modulus of elasticity of bolt $E_bolt := \left(29.1 \cdot 10^{6} \cdot psi\right)$

Thermal coefficient for bolt:

$$\beta_bolt_hot := 9.1 \cdot 10^{-6} \cdot \frac{\frac{in}{in}}{deg}$$

$$\beta_bolt_cold := 7.8 \cdot 10^{-6} \cdot \frac{\frac{in}{in}}{deg}$$

Data for bending modulus of Rupture of bolt $fm := Ftu_bolt$ $fo := Fty_bolt$

Section factor for bolt $k1 := 1.7$ (Ref. Bruhn, page C3.3 & fig C3.7)

Insert

Temperature correction factor for insert strength $TS_ins := 0.94$

Ultimate tensile allowable stress $Ftu_ins := 150000 \cdot psi$

Ultimate shear allowable stress $Fsu_ins := 0.6 \cdot Ftu_ins$

Washer

Temperature correction factor for washer modulus $TE_washer := 1.0$

Modulus of elasticity of washer $E_washer := \left(29.1 \cdot 10^{6} \cdot psi\right)$

Flanges

Stiffness of the joint depends upon number of members in the grip of the fasteners, Modulus of elasticity of these members, and diameters of the bolt and the washer.

Temperature correction factor for flange 1 $Tf1E := 1.0$ (modulus) $Tf2s := 0.96$ (strength)

Temperature correction factor for flange 2 $Tf2E := 1.0$ (modulus) $Fsu_f2 := 27000 \cdot psi$

Modulus of elasticity for the parts in the joint $E_flange1 := \left(10.8 \cdot 10^{6} \cdot psi\right)$ $E_flange2 := \left(10.1 \cdot 10^{6} \cdot psi\right)$

Coefficient of thermal expansion for flanges $\beta_flange1_hot := 12.3 \cdot 10^{-6} \cdot \frac{\frac{in}{in}}{deg}$ $\beta_flange2_hot := 12.7 \cdot 10^{-6} \cdot \frac{\frac{in}{in}}{deg}$

$\beta_flange1_cold := 11.0 \cdot 10^{-6} \cdot \frac{\frac{in}{in}}{deg}$ $\beta_flange2_cold := 11.3 \cdot 10^{-6} \cdot \frac{\frac{in}{in}}{deg}$

Prepared By	Name	Date	Engineering and Science Contract Group	File Name
	Kent Peters	08/19/08		DS TRD Outer Bumper to Standoff B.xmcdz
Checked By	C. Bala		*Structural Analysis Section*	Drawing No. SEG39137851
Title	**Debris Shield Fastener 3 Flange Joint Analysis for Bolt/Washer with Insert Port (TRD) - Outer Bumper to Standoff B**			

Mid Flange

Temperature correction factor for mid flange modulus $TE_midflg_ad2 := 0.98$

Modulus of elasticity of mid flange $E_midflg_ad2 := (10.1 \cdot 10^{6} \cdot psi)$

Coefficient of thermal expansion for mid flange $\beta_midflg_ad2_hot := 12.7 \cdot 10^{-6} \cdot \frac{\frac{in}{in}}{deg}$ $\beta_midflg_ad2_cold := 11.3 \cdot 10^{-6} \cdot \frac{\frac{in}{in}}{deg}$

Torque/Preload data

Maximum torque (50 % of yield) $Tmax := 65 \cdot in \cdot lbf$ Loading plane factor: $n := 0.5$

Minimum torque (85 % of Max torque) $Tmin := 55 \cdot in \cdot lbf$ Preload Uncertainty: $u := 0.25$

Torque coefficient: $k := 0.15$

Stiffness File for 3 Flange - insert

Bolt Load data

Bolt/joint stiffness factor	= **0.567**	Preload due to temperature	Pthr_pos = **107.8** lbf
Max. preload	PLDmax = **2274.5** lbf		Pthr_neg = **0** lbf
Min. preload	PLDmin = **991.7** lbf	Uncertainty factor	u = **0.250**
Joint separation load	Psep = **14.040** lbf	Torque coefficient	k = **0.150**
Max. load on the bolt(ultimate)	Pb = **2282.1** lbf	Loading plane factor	n = **0.500**
Max. load on the bolt(yield)	Pby = **2279.2** lbf	Thread shear pullout load of bolt or insert	Pths = **83464.8** lbf
Bolt ultimate tensile strength	PAt = **4840.8** lbf	Thread shear pullout load in parent metal	Ppths = **6229.4** lbf

Length_check = **"Bolt length is sufficient"**

Summary of Margins for bolt:

Joint separation	MS_1 = **84.72**	Direct Thread shear Ultimate	MS_6 = **230.49**
Direct Tension Ultimate	MS_2 = **178.89**	Total Thread shear Ultimate	MS_7 = **1.73**
Direct Tension Yield	MS_3 = **194.31**	Shear Ultimate	MS_8 = **44.88**
Total Tension Ultimate	MS_4 = **1.12**	Bending Ultimate	MS_9 = **1.26**
Total Tension Yield	MS_5 = **0.441**	Combined shear, tension and bending ultimate	MS_{10} = **0.094**

Determination of the smallest margin of safety for the bolt, and the failure mode:

$MSbolt := \min(MS)$

MSbolt = **0.094** Failure_Mode = **"Combined Shear Tension Bending Ultimate"**

Fail-safe Analysis

Fail-safe Loads

Applied tensile load $P_FS := 23.4 \cdot lbf$

Applied shear load $V_FS := 50.8 \cdot lbf$

Applied bending moment $M_FS := 77.8 \cdot in \cdot lbf$

Fail-safe Factors of Safety

Ultimate $SFu_FS := 1.0$

Joint Separation $SFsep_FS := 1.0$

Mon Feb 14 12:51:39 2005

Bolt Fail-safe Load data

Joint separation load $Psep_FS = 23.400\ lbf$

Max. load on the bolt(ultimate) $Pb_FS = 2282.1\ lbf$

Summary of fail-safe Margins for bolt:

Joint separation	$MS_FS_1 = 50.43$	Total Thread shear Ultimate	$MS_FS_5 = 1.73$
Direct Tension Ultimate	$MS_FS_2 = 178.89$	Shear Ultimate	$MS_FS_6 = 44.88$
Total Tension Ultimate	$MS_FS_3 = 1.12$	Bending Ultimate	$MS_FS_7 = 1.26$
Direct Thread shear Ultimate	$MS_FS_4 = 230.49$	Combined shear, tension and bending ultimate	$MS_FS_8 = 0.09$

Determination of the smallest fail-safe margin of safety for the bolt, and the failure mode:

$MSbolt_FS := \min(MS_FS)$

$MSbolt_FS = 0.094$ Failure_Mode_FS = **"Combined Shear Tension Bending Ultimate"**

Prepared By	Name	Date		File Name
	Kent Peters	09/04/08	Engineering and Science Contract Group *Structural Analysis Section*	DS TRD Corner to Bumper.xmcdx
Checked By	C. Bala			Drawing No. SEG39137851
Title	Debris Shield Rivet Analysis Port (TRD) Side - Corner Bracket to External Bumper			

Rivet Analysis

Rivet := **"NAS 1398DFC4-3, Rivet Blind, Protruding Head, Locked Spindle, .125 Dia, .126 Grip, .323 L)"**

Flange_1 := **"Debris Shield Corner Bracket"**
Part_Number_1_1 := **"SDG39137849-001"**
Part_Number_1_2 := **"SDG39137849-002"**
Part_Number_1_3 := **"SDG39137849-003"**
Part_Number_1_4 := **"SDG39137849-004"**
Material_1 := **"AL ALY 6061-T651, AMS-QQ-A-250/11"**

Flange_2 := **"Port External Bumper Assembly"**
Part_Number_2 := **"SDG39137853"**
Material_2 := **"AL ALY 2219-T87, AMS-QQ-A-250/30"**

Minimum edge distance of flange one edge1 := **.5**·in

Minimum edge distance of flange two edge2 := **.5**·in

Methodology

The Port Debris Shield has 4 Corner Brackets SDG39137849 (-001 thru -004) which support the External Bumper. All 4 Corner Brackets are .08 thick AL ALY 6061-T651; use NAS 1398DFC4-3 rivets which go through .125 holes.
Each rivet was modeled in NASTRAN as two spider RBE2s connected by a CBush. 64 Lift Off and 64 Landing load conditions were analyzed using the Integrated Loads FEM.
The worst worst case Axial (P) and Total Shear (V) loads from the CBush's were enveloped for all the rivets, for all 4 Corner Brackets, for all 128 load cases. The worst case P and the worst case V were used together to calculate the tensile and shear margins of safety.
For Fail-Safe Analysis, the worst worst case P and V were doubled and then used together to calculate the tensile and shear fail-safe margins of safety.

Allowables

Rivet Strengths (AL ALY 2017-T4 Sleeve)

Fsu := **494**·lbf *(Minimum Shear Strength)* *(Per Document NAS1400, Table III)*

Ftu := **230**·lbf *(Minimum Tensile Strength)* *(Per Document NAS1400, Table IV)*

Factors of Safety

FSu := **2** *(Ultimate Factor of Safety)*

FSy := **1.25** *(Yield Factor of Safety)*

FF := **1.15** *(Fitting Factor of Safety)*

Temperature Data

Temp_initial := **70**·deg *(Assembly)*

Temp_max := **140**·deg *(Maximum)*

Temp_min := **−76**·deg *(Minimum)*

Note: these are maximum temperatures that hardware sees / if maximum load occurs at a different temperature this will be conservative

Prepared By	Name	Date		File Name
	Kent Peters	09/04/08	Engineering and Science Contract Group *Structural Analysis Section*	DS TRD Corner to Bumper.xmcdx
Checked By	C. Bala			Drawing No. SEG39137851
Title	Debris Shield Rivet Analysis Port (TRD) Side - Corner Bracket to External Bumper			

Temperature Reduction Factors

Note: For the Debris Shield, the temperature extremes are -76°F to 140°F. These temperature reduction factors are conservative for liftoff/landing conditions.

$\beta_{u1} := \mathbf{0.99}$ *(Ultimate Temperature Reduction Factor)* *(Ref. MMPDS-03, Figure 3.2.3.1.4)*

Allowable Strengths With Temperature Reduction Factor

$F_{su1.a} := \beta_{u1} \cdot Fsu$ $F_{su1.a} = \mathbf{489}\,lbf$ *(Shear Strength Allowable)*

$F_{tu1.a} := \beta_{u1} \cdot Ftu$ $F_{tu1.a} = \mathbf{227.70}\,lbf$ *(Tensile Strength Allowable)*

Loads

$P := \mathbf{33.3}\,lbf$ *(Applied Tensile Load)* *(Worst Case Combination)*

$V := \mathbf{35.3}\,lbf$ *(Applied Shear Load)*

$M := \mathbf{0}\,in \cdot lbf$ *(Applied Bending Moment)*

Margin of Safety

$$MS_{tu} := \frac{F_{tu1.a}}{FSu \cdot FF \cdot P} - \mathbf{1}$$ $MS_{tu} = \mathbf{1.97}$ ***(Tensile Ultimate Margin of Safety)***

$$MS_{su} := \frac{F_{su1.a}}{FSu \cdot FF \cdot V} - \mathbf{1}$$ $MS_{su} = \mathbf{5.02}$ ***(Shear Ultimate Margin of Safety)***

Prepared By	Name	Date		File Name
	Kent Peters	09/04/08	Engineering and Science Contract Group *Structural Analysis Section*	DS TRD Corner to Bumper.xmcdx
Checked By	C. Bala			Drawing No. SEG39137851
Title	Debris Shield Rivet Analysis Port (TRD) Side - Corner Bracket to External Bumper			

Fail-Safe Analysis

Fail-Safe Loads

$P_FS := 2 \cdot P$ *(Applied Tensile Load)*

$P_FS = 66.60\,lbf$

$V_FS := 2 \cdot V$ *(Applied Shear Load)*

$V_FS = 70.60\,lbf$

$M_FS := 0.0 \cdot in \cdot lbf$ *(Applied Bending Moment)*

Fail-Safe Factors of Safety

$SFu_FS := 1.0$ *(Ultimate)*

Fail-Safe Margin of Safety

$$MS_FS_{tu} := \frac{F_{tu1.a}}{SFu_FS \cdot FF \cdot P_FS} - 1$$

$MS_FS_{tu} = 1.97$ ***(Fail-Safe Tensile Ultimate Margin of Safety)***

$$MS_FS_{su} := \frac{F_{su1.a}}{SFu_FS \cdot FF \cdot V_FS} - 1$$

$MS_FS_{su} = 5.02$ ***(Fail-Safe Shear Ultimate Margin of Safety)***

5.10.2 Starboard Debris Shield Assembly

5.10.2.1 General

Minimum Margins of Safety

Table 5.10.2.1 Parts Minimum Margins of Safety

Dwg/Part Number	Description	Material	Critical Load Condition	Failure Mode	Margin of Safety	Reference Page
SDG39137846-001	Debris Shield UPS Cover	AL ALY 7075-T73	Lift Off	Tensile Ultimate	1.27	5.10.2-26
SDG39137847-001	Debris Shield Interface Joint Bracket	AL ALY 7075-T7351	Landing	Tensile Ultimate	0.083	5.10.2-43
SDG39137848-001 SDG39137848-002	Debris Shield Mounting Brackets	AL ALY 6061-T651	Lift Off	Tensile Ultimate	0.27	5.10.2-38
SDG39137849-001 SDG39137849-002 SDG39137849-003 SDG39137849-004 SDG39137849-005	Debris Shield Corner Bracket	AL ALY 6061-T651	Landing	Tensile Ultimate	0.51	5.10.2-35
SDG39137854-001	Starboard External Bumper Assy	AL ALY 7075-T73	Landing	Shear Ultimate	0.89	5.10.2-23
SDG39137858-002	Debris Shield Inner Plate	AL ALY 7075-T73	Lift Off	Shear Ultimate	3.03	5.10.2-30

Table 5.10.2.2 Fastener Minimum Margins of Safety

Dwg/Part Number	Description	Fastener	Material	$MS_{nominal}$	Failure Mode	Reference Page
SDG39137846-001 SDG39137854	UPS Cover to External Bumper	NAS1133E4 .1900-32	A286	.11	Total Tension Yield	5.10.2.1-70
SDG39137847-001 SDG39135737	Interface Joint to Lower Vacuum Case	NAS1008-8 .5000-20	A286	.24	Total Tension Yield	5.10.2.1-6
SDG39137847-001 SDG39135727	Interface Joint to Upper Vacuum Case	NAS1008-8 .5000-20	A286	.23	Total Tension Yield	5.10.2.1-14
SDG39137848-002 SDG39135735	Mounting Bracket to Lower Trunnion Bridge Beam	NAS1351N4-12 .2500-28	A286	.14	Total Tension Yield	5.10.2.1-22
SDG39137848-001 SDG39137686-705	Mounting Bracket to Interface Panel A	NAS1351N3-10 .1900-32	A286	.13	Total Tension Yield	5.10.2.1-30
SDG39137854-001 SDG39137847-001	External Bumper to Interface Joint	NAS1133E4 .1900-32	A286	.10	Total Tension Yield	5.10.2.1-38
SDG39137848-002 SDG39137854-001	Mounting Bracket to External Bumper	NAS1133E4 .1900-32	A286	.10	Total Tension Yield	5.10.2.1-46
SDG39137848-001 SDG39137854-001	Mounting Bracket to External Bumper	NAS1133E4 .1900-32	A286	.10	Total Tension Yield	5.10.2.1-54
SDG39137858-002 SDG39137855-001	Inner Plate to Standoff B	NAS1004-1 .2500-28	A286	.10	Total Tension Yield	5.10.2.1-62
SDG39137854-001 SDG39137855-001	External Bumper to Standoff B	NAS1004-40 .2500-28	A286	.09	Combined Shear, Tension and Bending Ultimate	5.10.2.1-77
SDG39137849 SDG39137854-001	Corner Bracket to External Bumper	NAS1398DFC4-3 .125 Dia	AL ALY 2017-T4	1.97	Tensile Ultimate	5.10.2.1-80

Table 5.10.2.3 Fastener Fail-Safe Minimum Margins of Safety

Dwg/Part Number	Description	Fastener	Material	$MS_{fail\text{-}safe}$	Failure Mode	Reference Page
SDG39137846-001 SDG39137854	UPS Cover to External Bumper	NAS1133E4 .1900-32	A286	.18	Total Thread Shear Ultimate	5.10.2.1-71
SDG39137847-001 SDG39135737	Interface Joint to Lower Vacuum Case	NAS1008-8 .5000-20	A286	.82	Combined Shear, Tension and Bending Ultimate	5.10.2.1-7
SDG39137847-001 SDG39135727	Interface Joint to Upper Vacuum Case	NAS1008-8 .5000-20	A286	.82	Combined Shear, Tension and Bending Ultimate	5.10.2.1-15
SDG39137848-002 SDG39135735	Mounting Bracket to Lower Trunnion Bridge Beam	NAS1351N4-12 .2500-28	A286	.22	Total Thread Shear Ultimate	5.10.2.1-23
SDG39137848-001 SDG39137686-705	Mounting Bracket to Interface Panel A	NAS1351N3-10 .1900-32	A286	.20	Total Thread Shear Ultimate	5.10.2.1-31
SDG39137854-001 SDG39137847-001	External Bumper to Interface Joint	NAS1133E4 .1900-32	A286	.17	Total Thread Shear Ultimate	5.10.2.1-39
SDG39137848-002 SDG39137854-001	Mounting Bracket to External Bumper	NAS1133E4 .1900-32	A286	.17	Total Thread Shear Ultimate	5.10.2.1-47
SDG39137848-001 SDG39137854-001	Mounting Bracket to External Bumper	NAS1133E4 .1900-32	A286	.17	Total Thread Shear Ultimate	5.10.2.1-55
SDG39137858-002 SDG39137855-001	Inner Plate to Standoff B	NAS1004-1 .2500-28	A286	.62	Combined Shear, Tension and Bending Ultimate	5.10.2.1-63
SDG39137854-001 SDG39137855-001	External Bumper to Standoff B	NAS1004-40 .2500-28	A286	.09	Combined Shear, Tension and Bending Ultimate	5.10.2.1-78
SDG39137849 SDG39137854-001	Corner Bracket to External Bumper	NAS1398DFC4-3 .125 Dia	AL ALY 2017-T4	1.97	Tensile Ultimate	5.10.2.1-81

Notes:

1. Factors of Safety are 2.0 for Ultimate and 1.25 for Yield.
2. Boundary conditions are at ten AMS-2 bolts distributed as three along Interface Panel A, three along the Lower Trunnion Bridge Beam, two along the Lower Vacuum Case, and two along the Upper Vacuum Case.
3. 64 launch load cases, 64 landing load cases were applied to the DS.
4. Factors of Safety for Fail-Safe analysis are 1.0 for Ultimate and 1.0 for Yield.

5.10.2.2 Introduction

The Starboard Side Debris Shield (DS) provides shielding for the Uninterrupted Power Supply (UPS) Box to prevent catastrophic rupture of these tanks in the event of MMOD impact which would release high-velocity fragments creating a potential hazard for the crew, Space Shuttle, and the International Space Station.

Structural Description

The Starboard DS (Figure 5.10.2.1 Starboard Debris Shield Assembly, SEG39137852) consists of two thin aluminum panels sandwiching a ballistic blanket and it's supports (Figure 5.10.2.5 Starboard Debris Shield Mounting Plates Supporting the Ballistic Blanket). The three layers are separated by aluminum standoffs (Figure 5.10.2.4 Transparent View Looking Through the Side of External Bumper at Standoffs). Bolts are used to connect the various panels.

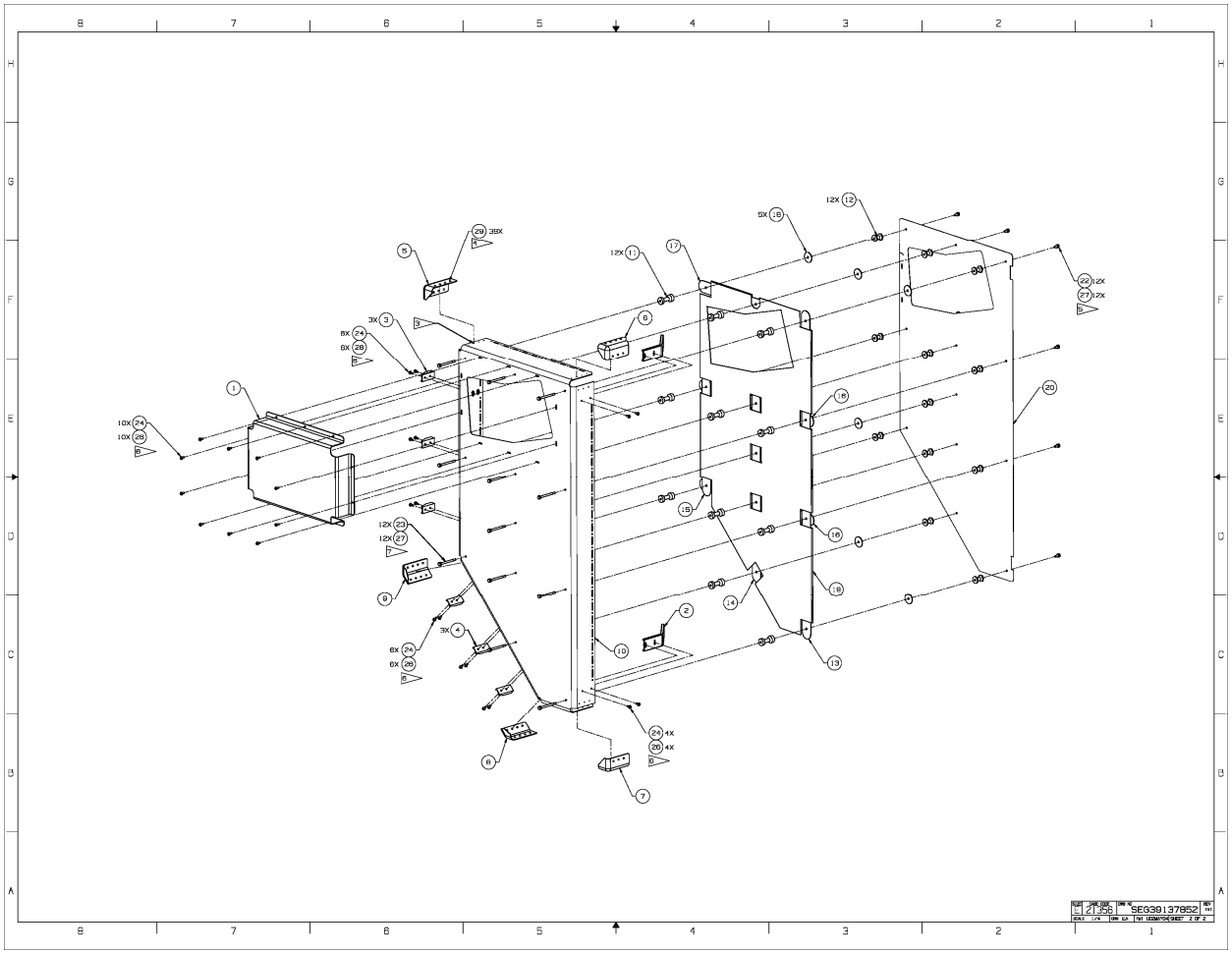

Figure 5.10.2.1 Starboard Debris Shield Assembly, SEG39137852

Figure 5.10.2.2 Starboard Debris Shield with the Unique Support Structure (USS), shows a top view of where the Starboard DS fits into the USS. While Figure 5.10.2.3 Starboard Debris Shield with the USS, shows the Starboard DS next to Interface Panel A.

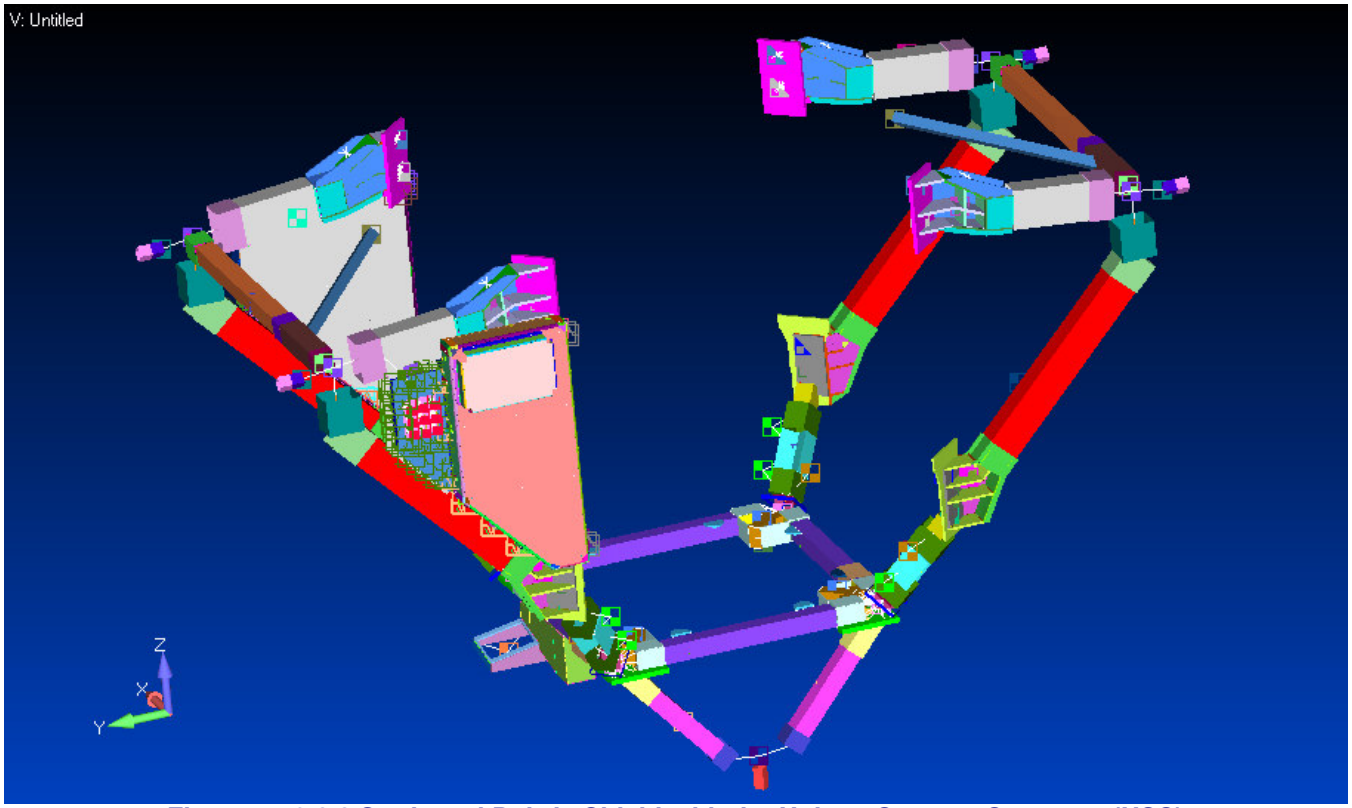

Figure 5.10.2.2 Starboard Debris Shield with the Unique Support Structure (USS)

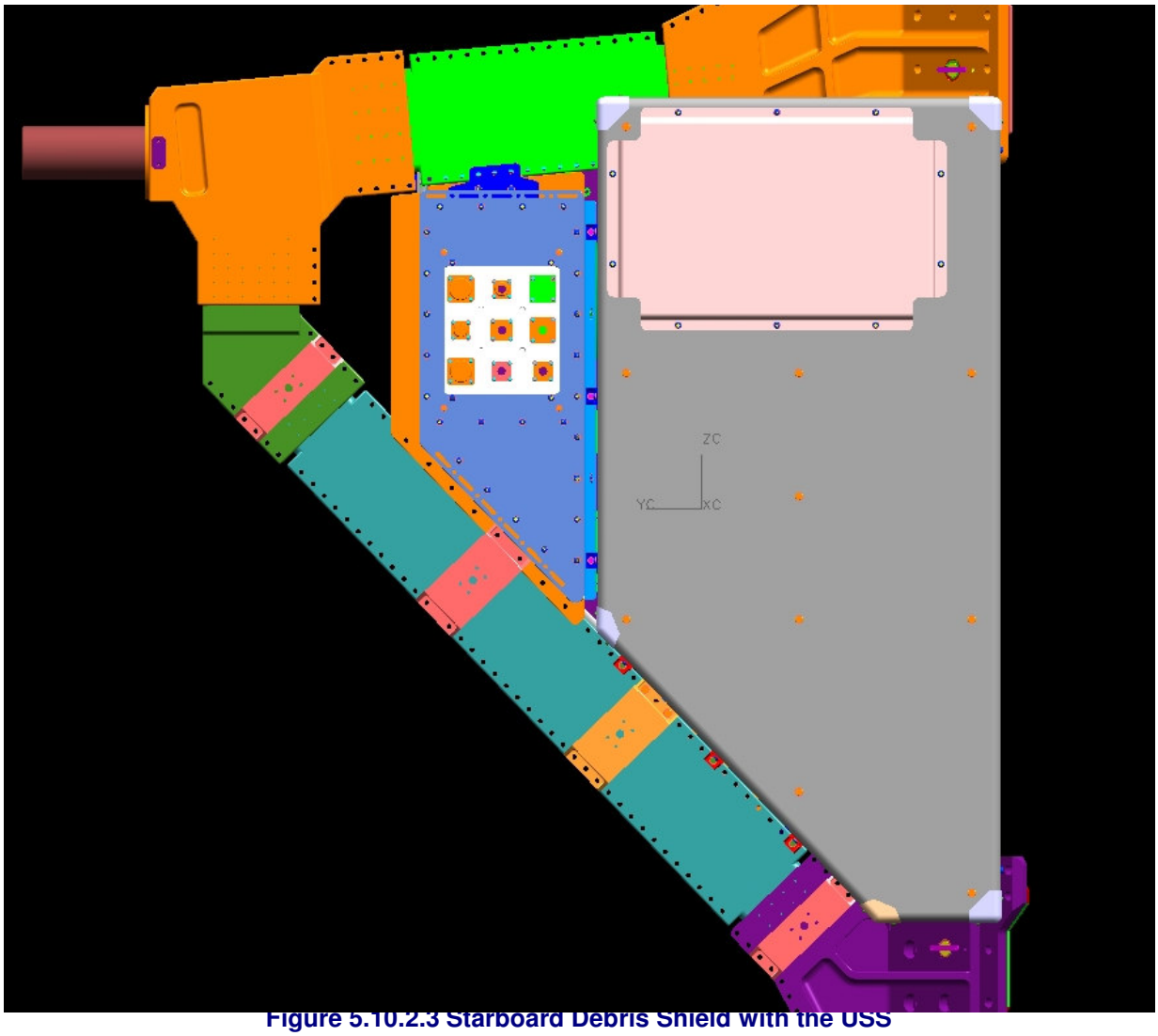

Figure 5.10.2.3 Starboard Debris Shield with the USS

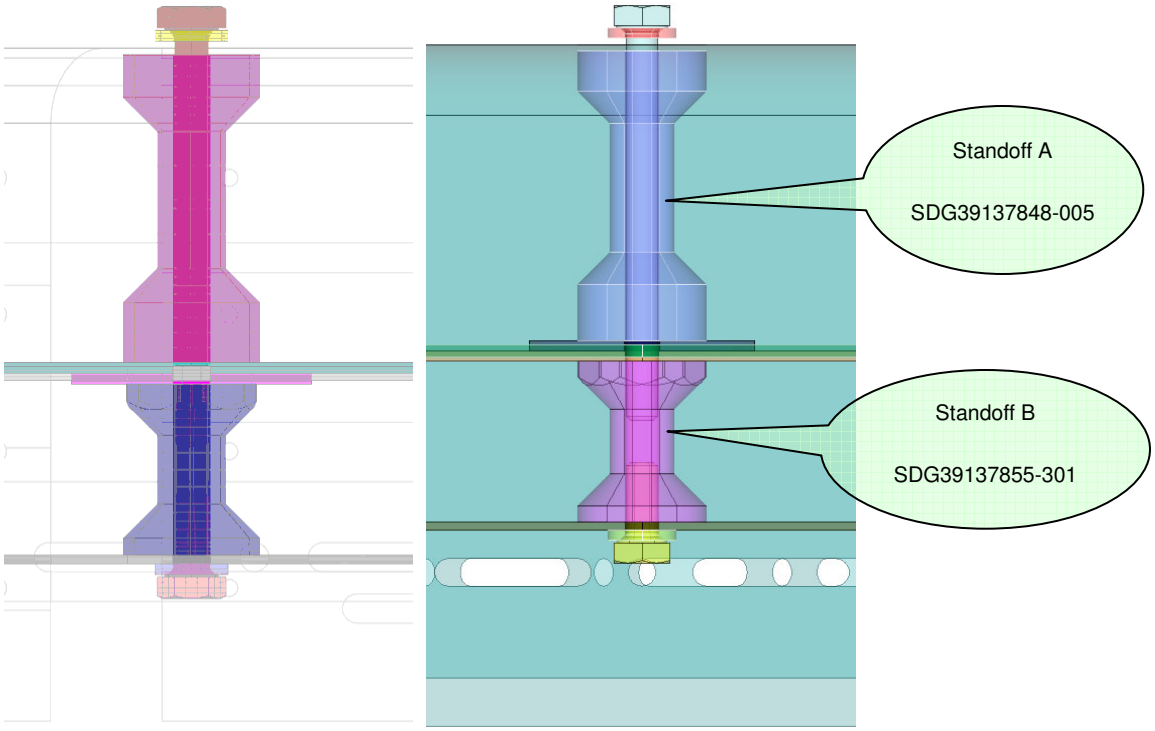

Figure 5.10.2.4 Transparent View Looking Through the Side of External Bumper at Standoffs

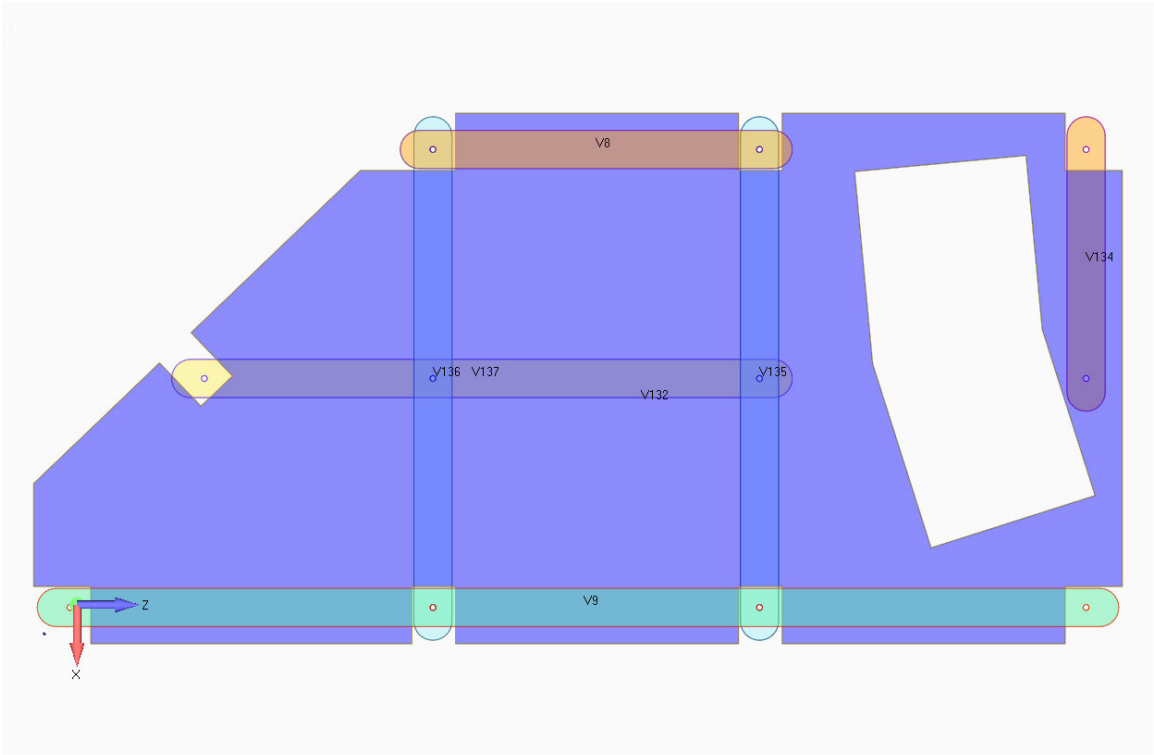

Figure 5.10.2.5 Starboard Debris Shield Mounting Plates Supporting the Ballistic Blanket

The Starboard DS attaches to the Channel Assembly Interface Panel A with three fasteners, to the Lower Trunnion Bridge Beam with three fasteners, to the Lower Vacuum Case with two fasteners, and to the Upper Vacuum Case with two fasteners (Figure 5.10.2.6 Starboard Debris Shield Mounting Brackets).

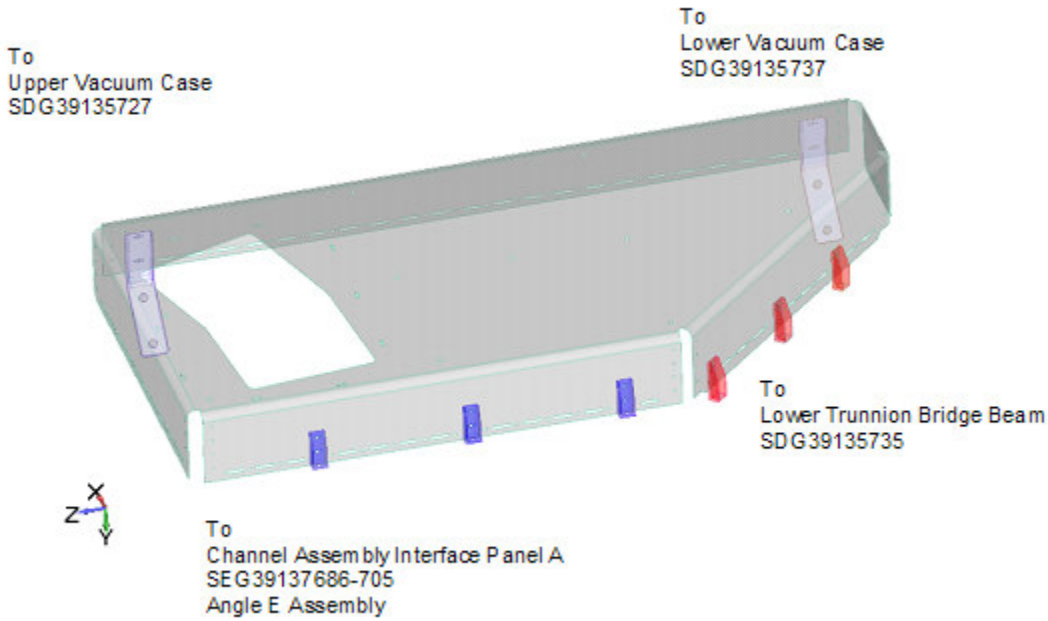

Figure 5.10.2.6 Starboard Debris Shield Mounting Brackets

Load Conditions

An initial assessment of the Shuttle flight loads was made using the secondary structure load factors provided in Table 4-4 of the AMS-02 Structural Verification Plan (JSC-28792, Rev. E). However, these loads are very conservative and the results of the analysis showed that the structural margins were unacceptable. The load factors are provided in Table 5.10.2.4 Launch/Landing Design Limit Load Factors for Small Secondary Structures for reference.

Table 5.10.2.4 Launch/Landing Design Limit Load Factors for Small Secondary Structures

Weight (pounds)	Load Factor (g)
<20	40
20-50	31
50-100	22
100-200	17
200-500	13

To reduce the conservatism for the flight loads assessment, the Starboard DS math model was integrated with the math model of the full AMS-02 payload. The liftoff and landing load factors from the AMS-02 design coupled loads analysis (as specified in Table 5-2 of the AMS-02 SVP) were applied to the integrated math model. These loads are provided in Table 5.10.2.5 Second DCLA Liftoff and Landing Load Factors for reference.

Table 5.10.2.5 Second DCLA Liftoff and Landing Load Factors

Event	N_x	N_y	N_z	R_x	R_y	R_z
Liftoff	-3.7 / 0.4	-1.4 / 1.6	-1.4 / 1.5	-4.5 / 4.1	-8.4 / 11.0	-3.9 / 4.1
Abort Landing	-1.2 / 1.3	-0.7 / 0.6	-2.1 / 5.6	-5.2 / 4.7	-10.7 / 13.9	-6.0 / 4.8

A static loads analysis was performed using NASTRAN with 64 subcases representing all combinations of the liftoff load factors and 64 subcases representing all combinations of the landing load factors. Loads and stresses were then recovered from this integrated analysis for the Starboard DS interface and internal components and used to compute the structural strength margins.

Factors of Safety

The hardware is designed with an Ultimate Factor of Safety of 2.0 and a Yield Factor of Safety of 1.25 against limit loads.

Materials and Temperature

Table of Material Allowables

The materials, and their allowables, used in the Starboard Debris Shield are shown in Table 5.10.2.6 Material Allowables.

Table 5.10.2.6 Material Allowables

Dwg/Part Number	Description	Material	Allowables
SDG39137846-001	Debris Shield UPS Cover	AL ALY 7075-T73 AMS-QQ-A-250/12	F_{tu} = 67000 psi F_{ty} = 55000 psi F_{su} = 38000 psi
SDG39137847-001	Debris Shield Interface Joint Bracket	AL ALY 7075-T7351 AMS-QQ-A-250/12	F_{tu} = 66000 psi F_{ty} = 55000 psi F_{su} = 39000 psi
SDG39137848-001 SDG39137848-002	Debris Shield Mounting Brackets	AL ALY 6061-T651 AMS-QQ-A-250/11	F_{tu} = 42000 psi F_{ty} = 36000 psi F_{su} = 27000 psi
SDG39137849-001 SDG39137849-002 SDG39137849-003 SDG39137849-004 SDG39137849-005	Debris Shield Corner Bracket	AL ALY 6061-T651 AMS-QQ-A-250/11	F_{tu} = 42000 psi F_{ty} = 36000 psi F_{su} = 27000 psi
SDG39137854-001	Starboard External Bumper Assy	AL ALY 7075-T73 AMS-QQ-A-250/12	F_{tu} = 67000 psi F_{ty} = 55000 psi F_{su} = 38000 psi
SDG39137858-002	Debris Shield Inner Plate	AL ALY 7075-T73 AMS-QQ-A-250/12	F_{tu} = 67000 psi F_{ty} = 55000 psi F_{su} = 38000 psi

Temperature Degradation

The temperature extremes are -76°F to 140°F.

5.10.2.3 Description of the Starboard DS Finite Element Model

The FEMAP modeling software was used to generate a finite element model of the Starboard DS for structural analysis using NASTRAN.

1. The geometry of each part was identified by a CAD model (Parasolid format) that was provided by the design group. This geometry was used as the basis for generating the finite element mesh.
2. The External Bumper, UPS Cover, Inner Plate (bumper), Corner Brackets, and Mounting Brackets are modeled using plate elements (CQUAD4 and CTRIA3).
3. The Mounting Bracket to USS and the Mounting Bracket to External Bumper fasteners are represented by CBUSH elements with stiffness values for the three translation directions that represent axial and shear stiffness.
4. The standoffs that provide separation between the External Bumper, Ballistic Blanket, and Inner Plate are modeled with beam (CBAR) elements.
5. The Ballistic Blanket and it's supports are represented by CMass elements with the total weight of the blanket and it's supports evenly distributed at the intersections with the Standoffs.
6. The Starboard DS model is integrated with the USS model.

A summary from NASTRAN of the finite elements comprising the model is provided below.

```
        M O D E L   S U M M A R Y

NUMBER OF GRID     POINTS   =   279432

NUMBER OF CBAR     ELEMENTS =    22467
NUMBER OF CBEAM    ELEMENTS =    15152
NUMBER OF CBUSH    ELEMENTS =     3168
NUMBER OF CHEXA    ELEMENTS =     1640
NUMBER OF CONM2    ELEMENTS =     1649
NUMBER OF CPENTA   ELEMENTS =      376
NUMBER OF CQUAD4   ELEMENTS =   229969
NUMBER OF CROD     ELEMENTS =       42
NUMBER OF CTETRA   ELEMENTS =      216
NUMBER OF CTRIA3   ELEMENTS =    17956

NUMBER OF RBE2     ELEMENTS =    13701
NUMBER OF RBE3     ELEMENTS =      194
```

Description of the Integrated Starboard DS and Full Payload Math Model

The 2-06 version of the AMS-02 loads model was used to represent the payload in the integrated model. The Starboard DS math model described in the preceding sections was connected to the payload model using two rigid elements (RBE2). The independent nodes for the two rigid elements are the nodes on the beam elements representing the Starboard DS interface with the Upper Trunnion Bridge Beam and the Lower Trunnion Bridge Beam. The dependent nodes of the rigid elements are the Starboard DS nodes that represent the interface bolt locations. A view of the full payload math model is shown in Figure 5.10.2.7 Finite Element Model of Starboard DS Integrated with Full Payload.

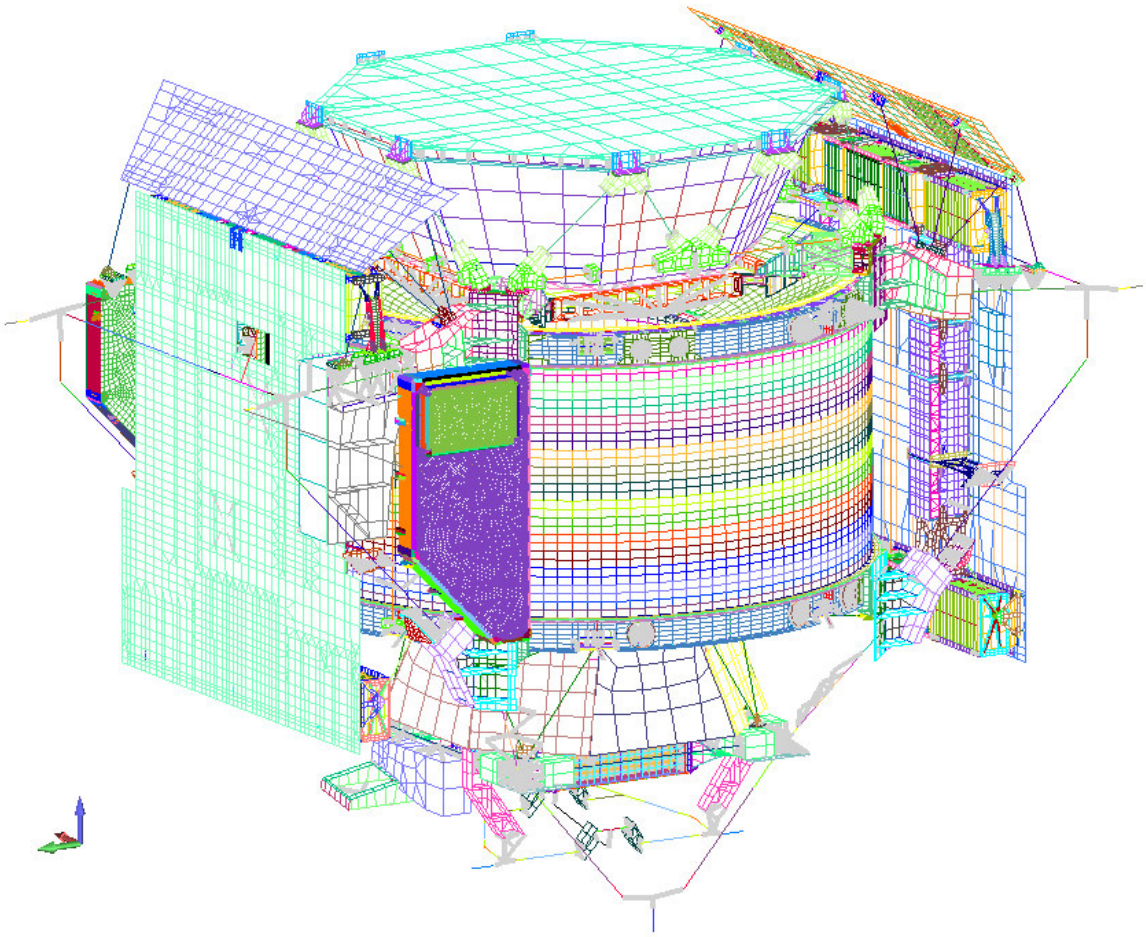

Figure 5.10.2.7 Finite Element Model of Starboard DS Integrated with Full Payload

Checks for the Integrated Starboard DS and Full Payload Math Model

Constraint and Grounding Checks

Constraint and grounding checks were performed using MSC NASTRAN. The results of these checks are shown below for an unconstrained model. The model passes the checks at all degree-of-freedom set levels with sufficiently low strain energy to indicate that there are no unintended constraints or grounding issues.

```
*** USER INFORMATION MESSAGE 7570 (GPWG1D)
RESULTS OF RIGID BODY CHECKS OF MATRIX KGG      (G-SET)  FOLLOW:
PRINT RESULTS IN ALL SIX DIRECTIONS AGAINST THE LIMIT OF   4.703487E-01
```

DIRECTION	STRAIN ENERGY	PASS/FAIL
1	1.899828E-06	PASS
2	1.004083E-06	PASS
3	4.015733E-06	PASS
4	7.521169E-03	PASS
5	4.014671E-03	PASS
6	2.324051E-03	PASS

```
SOME POSSIBLE REASONS MAY LEAD TO THE FAILURE:
1. CELASI ELEMENTS CONNECTING TO ONLY ONE GRID POINT;
2. CELASI ELEMENTS CONNECTING TO NON-COINCIDENT POINTS;
3. CELASI ELEMENTS CONNECTING TO NON-COLINEAR DOF;
4. IMPROPERLY DEFINED DMIG MATRICES;
```

```
*** USER INFORMATION MESSAGE 7570 (GPWG1D)
RESULTS OF RIGID BODY CHECKS OF MATRIX KNN      (N-SET)  FOLLOW:
PRINT RESULTS IN ALL SIX DIRECTIONS AGAINST THE LIMIT OF   9.176609E-01
DIRECTION        STRAIN ENERGY        PASS/FAIL
---------        -------------        ---------
   1               1.208936E-06          PASS
   2               8.499612E-07          PASS
   3               3.474857E-06          PASS
   4               6.511780E-03          PASS
   5               3.893722E-03          PASS
   6               2.981926E-04          PASS
SOME POSSIBLE REASONS MAY LEAD TO THE FAILURE:
1. MULTIPOINT CONSTRAINT EQUATIONS WHICH DO NOT SATISFY RIGID-BODY MOTION;
2. RBE3 ELEMENTS FOR WHICH THE INDEPENDENT DEGREE-OF-FREEDOM CANNOT DESCRIBE
ALL POSSIBLE RIGID-BODY MOTIONS.
```

```
*** USER INFORMATION MESSAGE 7570 (GPWG1D)
RESULTS OF RIGID BODY CHECKS OF MATRIX KFF      (F-SET)  FOLLOW:
PRINT RESULTS IN ALL SIX DIRECTIONS AGAINST THE LIMIT OF   9.176609E-01
DIRECTION        STRAIN ENERGY        PASS/FAIL
---------        -------------        ---------
   1               1.208936E-06          PASS
   2               8.499612E-07          PASS
   3               3.474857E-06          PASS
   4               6.511780E-03          PASS
   5               3.893722E-03          PASS
   6               2.981926E-04          PASS
SOME POSSIBLE REASONS MAY LEAD TO THE FAILURE:
1. CONSTRAINTS WHICH PREVENT RIGID-BODY MOTION.
```

```
*** USER INFORMATION MESSAGE 7570 (GPWG1D)
RESULTS OF RIGID BODY CHECKS OF MATRIX KAA1     (A-SET)  FOLLOW:
PRINT RESULTS IN ALL SIX DIRECTIONS AGAINST THE LIMIT OF   9.176609E-01
DIRECTION        STRAIN ENERGY        PASS/FAIL
---------        -------------        ---------
   1               1.208936E-06          PASS
   2               8.499612E-07          PASS
   3               3.474857E-06          PASS
   4               6.511780E-03          PASS
   5               3.893722E-03          PASS
   6               2.981926E-04          PASS
IF THE MODEL HAS PASSED THE PREVIOUS CHECKS FOR THE G-SET AND N-SET,
THEN SOME POSSIBLE CAUSES ARE:
1. THE MODEL IS NOT INTENDED TO BE FREE-FREE WHICH INDICATES THAT THE MODEL IS
PROPERLY CONSTRAINED TO GROUND;
2. THE REFERENCE GRID POINT (GRID=GID ON THE GROUNDCHECK COMMAND) IS LOCATED
TOO FAR FROM THE MODEL'S CENTER OF GRAVITY. IT IS RECOMMENDED THAT THE
REFERENCE GRID POINT BE LOCATED AS CLOSE AS POSSIBLE TO THE MODEL'S CENTER
OF GRAVITY OF THE MODEL (SEE THE GRID POINT WEIGHT GENERATOR OUTPUT);
3. PARAM,AUTOSPC,YES CONSTRAINS NEAR-SINGULAR DEGREES-OF-FREEDOM. WHEN A
FINITE ELEMENT MODEL WITH AUTOSPC FAILS THE A-SET CHECK, IT IS NOT EVIDENT
THAT GROUNDING HAS OCCURRED. THE USE OF PARAM,SNORM WILL NOT ELIMINATE THE
SPURIOUS FAILURE.
```

Modal Check

A modal analysis was performed using NASTRAN to determine the modal frequencies and confirm that the model has appropriate rigid-body modes. A list of the rigid-body modes and elastic modes are provided below.

R E A L E I G E N V A L U E S

MODE NO.	EXTRACTION ORDER	EIGENVALUE	RADIANS	CYCLES	GENERALIZED MASS	GENERALIZED STIFFNESS
1	1	2.479914E-07	4.979873E-04	7.925714E-05	1.000000E+00	2.479914E-07
2	2	3.999739E-07	6.324349E-04	1.006551E-04	1.000000E+00	3.999739E-07
3	3	6.368180E-07	7.980088E-04	1.270070E-04	1.000000E+00	6.368180E-07
4	4	1.215952E-06	1.102702E-03	1.755005E-04	1.000000E+00	1.215952E-06
5	5	2.589807E-06	1.609288E-03	2.561261E-04	1.000000E+00	2.589807E-06
6	6	3.487992E-06	1.867617E-03	2.972404E-04	1.000000E+00	3.487992E-06

```
7     7       6.905704E+02    2.627871E+01    4.182386E+00    1.000000E+00    6.905704E+02
```

Mass Properties Check

Since the Starboard DS was run integrated with the full payload model, a NASTRAN mass properties check would not be useful as the Starboard DS is a small portion of the total mass of the integrated model. So, using FEMAP, a mass properties check was performed on just the Starboard DS.

Using FEMAP 9.3.1 > Tools > Mass Properties > Mesh Properties, the Starboard Debris Shield assembly FEM has a mass of 0.0878126 lbf-s^2/in or a weight of 33.90 lbf.

```
Check Mass Properties
55335 Element(s) Selected...

Mass                          Center of Gravity in CSys 0
Structural   =    0.0878126  X=    -46.10066  Y=     48.35648  Z=     395.1209
NonStructural=           0.  X=           0.  Y=           0.  Z=           0.
Total Mass   =    0.0878126  X=    -46.10066  Y=     48.35648  Z=     395.1209

Inertias about CSys 0                    Inertias about C.G. in CSys 0
Ixx =     13940.18  Iyy=     -195.834    Ixx =      25.4914  Iyz=   -0.0764394
Iyy =     13916.14  Iyz=      1679.83    Iyy =     20.16956  Iyz=      2.02535
Izz =     397.9457  Izx=    -1599.994    Izz =     5.983734  Izx=    -0.458038

Total Length (Line Elements only) =     50.74155
Total Area   (Area Elements only) =      2938.26
Total Volume (All Elements)       =     260.6704
```

Based on the Unigraphics CAD model, the Starboard Debris Shield assembly SDG39137851 has a weight of 32.58 lbf, without the soft goods.

5.10.2.4 Detailed Stress Analysis

The critical stresses for all components of the Starboard Debris Shield assembly are compared to the Ultimate and Yield strength of the Aluminum Alloy materials used in the assembly. Analysis of the fasteners used to assemble the Starboard DS was also performed. All margins of safety are positive.

The minimum Margins of Safety Summary of the parts are shown in Table 5.10.2.1 Parts Minimum Margins of Safety, Table 5.10.2.2 Fastener Minimum Margins of Safety, and Table 5.10.2.3 Fastener Fail-Safe Minimum Margins of Safety.

Intentionally Left Blank

Intentionally Left Blank

Intentionally Left Blank

Intentionally Left Blank

Intentionally Left Blank

CHECK of Debris Shield

Starboard (UPS) - Starboard External Bumper ASSY, SDG39137854

Allowables

Material Properties

AL ALY, 7075-T73, Sheet, 0.040-0.249, A, AMS-QQ-A-250/12

$F_{tu} := \mathbf{67000} \cdot psi$ *(Ref. MMPDS-03, Table 3.7.7.0(b3))*

$F_{ty} := \mathbf{55000} \cdot psi$

$F_{su} := \mathbf{38000} \cdot psi$

Factors of Safety

$FS_u := \mathbf{2.0}$ $FS_y := \mathbf{1.25}$

Temperature Reduction Factors

+ At 140°F: (For the Debris Shield, the temperature extremes are -76°F to 140°F; These temperature reduction factors are conservative for liftoff/landing conditions)

- Ultimate: $\beta_u := \mathbf{0.96}$ *(Ref. MMPDS-03, Figure 3.7.7.1.1.(c))*

- Yield: $\beta_y := \mathbf{0.96}$ *(Ref. MMPDS-03, Figure 3.7.7.1.1.(d))*

Allowable Stresses

$F_{tug} := \beta_u \cdot F_{tu}$

$F_{tug} = \mathbf{64320}\, psi$

$F_{tyg} := \beta_y \cdot F_{ty}$

$F_{tyg} = \mathbf{52800}\, psi$

$F_{sug} := \beta_u \cdot F_{su}$

$F_{sug} = \mathbf{36480}\, psi$

Starboard (UPS) - Starboard External Bumper ASSY, SDG39137854

Omitted Elements

NASPOST V.2.2 is used to sort out the maximum stresses within the load cases. For the Launch and Landing Cases, the elements at the bolt holes were removed from the NASPOST sort (see table below). These elements resulted with localized stresses and therefore the stresses were not real.

(For Omitted Elements, See Appendix A28.4.1.1, p. A28-49)

Starboard (UPS) - Starboard External Bumper ASSY, SDG39137854

Liftoff Loads

The Debris Shield model was integrated with the AMS-02 payload loads model. For the following analysis, the maximum Von-Mises, principal, and shear stresses of plate elements are selected from 64 liftoff load cases (Load Case 1001 - 1064). NASPOST V.2.2 is used to sort out the maximum stresses within the load cases. Note that the elements at the bolt holes were removed from the NASPOST sort.

NASTRAN Punch Filename: static-liftoff-full-rev6.pch

Maximum Stresses *(See Appendix A28.3.6)*

$u_{tu} := \mathbf{12510} \cdot psi$ *LC# 1032, ELEM# 3112633* *(Maximum Principal Stress, p.A28-31)*

$u_{ty} := \mathbf{14575} \cdot psi$ *LC# 1032, ELEM# 3112633* *(Maximum Von-Mises Stress, p.A28-31)*

$u_{su} := \mathbf{8002} \cdot psi$ *LC# 1032; ELEM# 3112633* *(Maximum Shear Stress, p.A28-31)*

Margins of Safety

$$MS_{tug} := \frac{F_{tug}}{FS_u \cdot u_{tu}} - 1$$ $MS_{tug} = \mathbf{1.571}$ ***... Margin of Safety Tensile Ultimate***

$$MS_{tyg} := \frac{F_{tyg}}{FS_y \cdot u_{ty}} - 1$$ $MS_{tyg} = \mathbf{1.9}$ ***... Margin of Safety Tensile Yield***

$$MS_{sug} := \frac{F_{sug}}{FS_u \cdot u_{su}} - 1$$ $MS_{sug} = \mathbf{1.28}$ ***... Margin of Safety Shear Ultimate***

Starboard (UPS) - Starboard External Bumper ASSY, SDG39137854

Landing Loads

The Debris Shield model was integrated with the AMS-02 payload loads model. For the following analysis, the maximum Von-Mises, principal, and shear stresses of plate elements are selected from 64 landing load cases (Load Case 2001 - 2064). NASPOST V.2.2 is used to sort out the maximum stresses within the load cases. Note that the elements at the bolt holes were removed from the NASPOST sort.

NASTRAN Punch Filename: static-landing-full-rev6.pch

Maximum Stresses *(See Appendix A28.3.5)*

$u_{tu} := 14713 \cdot psi$ *LC# 2063 ELEM# 3112347* *(Maximum Principal Stress, p.A28-28)*

$u_{ty} := 16928 \cdot psi$ *LC# 2032, ELEM# 3112633* *(Maximum Von-Mises Stress, p.A28-28)*

$u_{su} := 9633 \cdot psi$ *LC# 2032; ELEM# 3112593* *(Maximum Shear Stress, p.A28-28)*

Margins of Safety

$$MS_{tug} := \frac{F_{tug}}{FS_u \cdot u_{tu}} - 1$$

$MS_{tug} = 1.186$ ***... Margin of Safety Tensile Ultimate***

$$MS_{tyg} := \frac{F_{tyg}}{FS_y \cdot u_{ty}} - 1$$

$MS_{tyg} = 1.5$ ***... Margin of Safety Tensile Yield***

$$MS_{sug} := \frac{F_{sug}}{FS_u \cdot u_{su}} - 1$$

$MS_{sug} = 0.89$ ***... Margin of Safety Shear Ultimate***

Starboard (UPS) - Debris Shield UPS Cover, SDG39137846

Allowables

Material Properties

AL ALY, 7075-T73, Sheet, 0.040-0.249, A, AMS-QQ-A-250/12

$F_{tu} := \mathbf{67000} \cdot psi$ *(Ref. MMPDS-03, Table 3.7.7.0(b3))*

$F_{ty} := \mathbf{55000} \cdot psi$

$F_{su} := \mathbf{38000} \cdot psi$

Factors of Safety

$FS_u := \mathbf{2.0}$ $FS_y := \mathbf{1.25}$

Temperature Reduction Factors

+ At 140°F: (For the Debris Shield, the temperature extremes are -76°F to 140°F; These temperature reduction factors are conservative for liftoff/landing conditions)

- Ultimate: $\beta_u := \mathbf{0.96}$ *(Ref. MMPDS-03, Figure 3.7.7.1.1.(c))*

- Yield: $\beta_y := \mathbf{0.96}$ *(Ref. MMPDS-03, Figure 3.7.7.1.1.(d))*

Allowable Stresses

$F_{tug} := \beta_u \cdot F_{tu}$

$F_{tug} = \mathbf{64320}\, psi$

$F_{tyg} := \beta_y \cdot F_{ty}$

$F_{tyg} = \mathbf{52800}\, psi$

$F_{sug} := \beta_u \cdot F_{su}$

$F_{sug} = \mathbf{36480}\, psi$

Starboard (UPS) - Debris Shield UPS Cover, SDG39137846

Omitted Elements

NASPOST V.2.2 is used to sort out the maximum stresses within the load cases. For the Launch and Landing Cases, the elements at the bolt holes were removed from the NASPOST sort (see table below). These elements resulted with localized stresses and therefore the stresses were not real.

There were no omitted elements in the UPS Cover

Starboard (UPS) - Debris Shield UPS Cover, SDG39137846

Liftoff Loads

The Debris Shield model was integrated with the AMS-02 payload loads model. For the following analysis, the maximum Von-Mises, principal, and shear stresses of plate elements are selected from 64 liftoff load cases (Load Case 1001 - 1064). NASPOST V.2.2 is used to sort out the maximum stresses within the load cases. Note that the elements at the bolt holes were removed from the NASPOST sort.

NASTRAN Punch Filename: static-liftoff-full-rev6.pch

Maximum Stresses *(See Appendix A28.3.12)*

$u_{tu} := \mathbf{14153} \cdot psi$ *LC# 1018 ELEM# 3200068* *(Maximum Principal Stress, p.A28-45)*

$u_{ty} := \mathbf{13843} \cdot psi$ *LC# 1018 ELEM# 3200072* *(Maximum Von-Mises Stress, p.A28-45)*

$u_{su} := \mathbf{7148} \cdot psi$ *LC# 1018 ELEM# 3200072* *(Maximum Shear Stress, p.A28-45)*

Margins of Safety

$$MS_{tug} := \frac{F_{tug}}{FS_u \cdot u_{tu}} - 1$$

$MS_{tug} = \mathbf{1.272}$ ***... Margin of Safety Tensile Ultimate***

$$MS_{tyg} := \frac{F_{tyg}}{FS_y \cdot u_{ty}} - 1$$

$MS_{tyg} = \mathbf{2.05}$ ***... Margin of Safety Tensile Yield***

$$MS_{sug} := \frac{F_{sug}}{FS_u \cdot u_{su}} - 1$$

$MS_{sug} = \mathbf{1.55}$ ***... Margin of Safety Shear Ultimate***

Starboard (UPS) - Debris Shield UPS Cover, SDG39137846

Landing Loads

The Debris Shield model was integrated with the AMS-02 payload loads model. For the following analysis, the maximum Von-Mises, principal, and shear stresses of plate elements are selected from 64 landing load cases (Load Case 2001 - 2064). NASPOST V.2.2 is used to sort out the maximum stresses within the load cases. Note that the elements at the bolt holes were removed from the NASPOST sort.

NASTRAN Punch Filename: static-landing-full-rev6.pch

Maximum Stresses *(See Appendix A28.3.11)*

$u_{tu} := 11001 \cdot psi$ *LC# 2016 ELEM# 3200167* *(Maximum Principal Stress, p.A28-43)*

$u_{ty} := 11070 \cdot psi$ *LC# 2016 ELEM# 3200167* *(Maximum Von-Mises Stress, p.A28-43)*

$u_{su} := 5678 \cdot psi$ *LC# 2016 ELEM# 3200167* *(Maximum Shear Stress, p.A28-43)*

Margins of Safety

$$MS_{tug} := \frac{F_{tug}}{FS_u \cdot u_{tu}} - 1$$

$MS_{tug} = 1.923$ ***... Margin of Safety Tensile Ultimate***

$$MS_{tyg} := \frac{F_{tyg}}{FS_y \cdot u_{ty}} - 1$$

$MS_{tyg} = 2.82$ ***... Margin of Safety Tensile Yield***

$$MS_{sug} := \frac{F_{sug}}{FS_u \cdot u_{su}} - 1$$

$MS_{sug} = 2.21$ ***... Margin of Safety Shear Ultimate***

Starboard (UPS) - Debris Shield Inner Plate, SDG39137858-002

Allowables

Material Properties

AL ALY, 7075-T73, Sheet, 0.040-0.249, A, AMS-QQ-A-250/12

$F_{tu} := \mathbf{67000} \cdot psi$ *(Ref. MMPDS-03, Table 3.7.7.0(b3))*

$F_{ty} := \mathbf{55000} \cdot psi$

$F_{su} := \mathbf{38000} \cdot psi$

Factors of Safety

$FS_u := \mathbf{2.0}$ $FS_y := \mathbf{1.25}$

Temperature Reduction Factors

+ At 140°F: (For the Debris Shield, the temperature extremes are -76°F to 140°F; These temperature reduction factors are conservative for liftoff/landing conditions)

- Ultimate: $\beta_u := \mathbf{0.96}$ *(Ref. MMPDS-03, Figure 3.7.7.1.1.(c))*

- Yield: $\beta_y := \mathbf{0.96}$ *(Ref. MMPDS-03, Figure 3.7.7.1.1.(d))*

Allowable Stresses

$F_{tug} := \beta_u \cdot F_{tu}$

$F_{tug} = \mathbf{64320}\, psi$

$F_{tyg} := \beta_y \cdot F_{ty}$

$F_{tyg} = \mathbf{52800}\, psi$

$F_{sug} := \beta_u \cdot F_{su}$

$F_{sug} = \mathbf{36480}\, psi$

Starboard (UPS) - Debris Shield Inner Plate, SDG39137858-002

Omitted Elements

NASPOST V.2.2 is used to sort out the maximum stresses within the load cases. For the Launch and Landing Cases, the elements at the bolt holes were removed from the NASPOST sort (see table below). These elements resulted with localized stresses and therefore the stresses were not real.

(For Omitted Elements, See Appendix A28.4.1.2, p. A28-56)

Starboard (UPS) - Debris Shield Inner Plate, SDG39137858-002

Liftoff Loads

The Debris Shield model was integrated with the AMS-02 payload loads model. For the following analysis, the maximum Von-Mises, principal, and shear stresses of plate elements are selected from 64 liftoff load cases (Load Case 1001 - 1064). NASPOST V.2.2 is used to sort out the maximum stresses within the load cases. Note that the elements at the bolt holes were removed from the NASPOST sort.

NASTRAN Punch Filename: static-liftoff-full-rev6.pch

Maximum Stresses *(See Appendix A28.3.6)*

$u_{tu} := 7977 \cdot psi$ *LC# 1018, ELEM# 3400451* *(Maximum Principal Stress, p.A28-32)*

$u_{ty} := 7865 \cdot psi$ *LC# 1018, ELEM# 3400219* *(Maximum Von-Mises Stress, p.A28-32)*

$u_{su} := 4523 \cdot psi$ *LC# 1018 ELEM# 3400219* *(Maximum Shear Stress, p.A28-32)*

Margins of Safety

$$MS_{tug} := \frac{F_{tug}}{FS_u \cdot u_{tu}} - 1$$

$MS_{tug} = 3.032$ ***... Margin of Safety Tensile Ultimate***

$$MS_{tyg} := \frac{F_{tyg}}{FS_y \cdot u_{ty}} - 1$$

$MS_{tyg} = 4.37$ ***... Margin of Safety Tensile Yield***

$$MS_{sug} := \frac{F_{sug}}{FS_u \cdot u_{su}} - 1$$

$MS_{sug} = 3.03$ ***... Margin of Safety Shear Ultimate***

Starboard (UPS) - Debris Shield Inner Plate, SDG39137858-002

Landing Loads

The Debris Shield model was integrated with the AMS-02 payload loads model. For the following analysis, the maximum Von-Mises, principal, and shear stresses of plate elements are selected from 64 landing load cases (Load Case 2001 - 2064). NASPOST V.2.2 is used to sort out the maximum stresses within the load cases. Note that the elements at the bolt holes were removed from the NASPOST sort.

NASTRAN Punch Filename: static-landing-full-rev6.pch

Maximum Stresses *(See Appendix A28.3.5)*

$u_{tu} := 6367 \cdot psi$ *LC# 2047, ELEM# 3402190* *(Maximum Principal Stress, p.A28-29)*

$u_{ty} := 6536 \cdot psi$ *LC# 2047, ELEM# 3400219* *(Maximum Von-Mises Stress, p.A28-29)*

$u_{su} := 3668 \cdot psi$ *LC# 2047; ELEM# 3400219* *(Maximum Shear Stress, p.A28-29)*

Margins of Safety

$$MS_{tug} := \frac{F_{tug}}{FS_u \cdot u_{tu}} - 1$$

$MS_{tug} = 4.051$ ***... Margin of Safety Tensile Ultimate***

$$MS_{tyg} := \frac{F_{tyg}}{FS_y \cdot u_{ty}} - 1$$

$MS_{tyg} = 5.46$ ***... Margin of Safety Tensile Yield***

$$MS_{sug} := \frac{F_{sug}}{FS_u \cdot u_{su}} - 1$$

$MS_{sug} = 3.97$ ***... Margin of Safety Shear Ultimate***

Starboard (UPS) - Debris Shield Corner Bracket, SDG39137849

Allowables

Material Properties

AL ALY, 6061-T651, Plate, 0.250-2.000, A, AMS-QQ-A-250/11

$F_{tu} := \mathbf{42000} \cdot psi$ *(Ref. MMPDS-03, Table 3.6.2.0(d))*

$F_{ty} := \mathbf{36000} \cdot psi$

$F_{su} := \mathbf{27000} \cdot psi$

Factors of Safety

$FS_u := \mathbf{2.0}$ $FS_y := \mathbf{1.25}$

Temperature Reduction Factors

+ At 140°F: (For the Debris Shield, the temperature extremes are -76°F to 140°F; These temperature reduction factors are conservative for liftoff/landing conditions)

- Ultimate: $\beta_u := \mathbf{0.96}$ *(Ref. MMPDS-03, Figure 3.6.2.2.1(a))*

- Yield: $\beta_y := \mathbf{0.96}$ *(Ref. MMPDS-03, Figure 3.6.2.2.1(b))*

Allowable Stresses

$F_{tug} := \beta_u \cdot F_{tu}$

$F_{tug} = \mathbf{40320}\, psi$

$F_{tyg} := \beta_y \cdot F_{ty}$

$F_{tyg} = \mathbf{34560}\, psi$

$F_{sug} := \beta_u \cdot F_{su}$

$F_{sug} = \mathbf{25920}\, psi$

Starboard (UPS) - Debris Shield Corner Bracket, SDG39137849

Omitted Elements

NASPOST V.2.2 is used to sort the maximum stresses across all load cases. For the Launch and Landing Cases, the elements around the perimeter of bolt holes, where the bolts were modeled with RBE2's, were removed from the NASPOST sort (see table below). These elements had artificially high localized stresses because of their proximity to the RBE2.

(For Omitted Elements, See Appendix A28.4.1.3, p. A28-57)

Starboard (UPS) - Debris Shield Corner Bracket, SDG39137849

Liftoff Loads

The Debris Shield model was integrated with the AMS-02 payload loads model. For the following analysis, the maximum Von-Mises, Principal, and Shear stresses of plate elements are selected from 64 liftoff load cases (Load Case 1001 - 1064). NASPOST V.2.2 is used to sort the maximum stresses across the load cases. Note that the elements at the bolt holes were removed from the NASPOST sort.

NASTRAN Punch Filename: static-liftoff-full-rev6.pch

Maximum Stresses *(See Appendix A28.3.6)*

$u_{tu} := 10574 \cdot psi$ *LC# 1017, ELEM# 3312670* *(Maximum Principal Stress, p.A28-32)*

$u_{ty} := 10126 \cdot psi$ *LC# 1017, ELEM# 3314027* *(Maximum Von-Mises Stress, p.A28-33)*

$u_{su} := 5461 \cdot psi$ *LC# 1017 ELEM# 3314027* *(Maximum Shear Stress, p.A28-33)*

Margins of Safety

$$MS_{tug} := \frac{F_{tug}}{FS_u \cdot u_{tu}} - 1$$

$MS_{tug} = 0.907$ ***... Margin of Safety Tensile Ultimate***

$$MS_{tyg} := \frac{F_{tyg}}{FS_y \cdot u_{ty}} - 1$$

$MS_{tyg} = 1.73$ ***... Margin of Safety Tensile Yield***

$$MS_{sug} := \frac{F_{sug}}{FS_u \cdot u_{su}} - 1$$

$MS_{sug} = 1.37$ ***... Margin of Safety Shear Ultimate***

Starboard (UPS) - Debris Shield Corner Bracket, SDG39137849

Landing Loads

The Debris Shield model was integrated with the AMS-02 payload loads model. For the following analysis, the maximum Von-Mises, Principal, and Shear stresses of plate elements are selected from 64 landing load cases (Load Case 2001 - 2064). NASPOST V.2.2 is used to sort the maximum stresses across the load cases. Note that the elements at the bolt holes were removed from the NASPOST sort.

NASTRAN Punch Filename: static-landing-full-rev6.pch

Maximum Stresses *(See Appendix A28.3.5)*

$u_{tu} := \mathbf{13340} \cdot psi$ *LC# 2031, ELEM# 3305939* *(Maximum Principal Stress, p.A28-29)*

$u_{ty} := \mathbf{12888} \cdot psi$ *LC# 2031 ELEM# 3305939* *(Maximum Von-Mises Stress, p.A28-30)*

$u_{su} := \mathbf{6670} \cdot psi$ *LC# 2031 ELEM# 3305939* *(Maximum Shear Stress, p.A28-30)*

Margins of Safety

$$MS_{tug} := \frac{F_{tug}}{FS_u \cdot u_{tu}} - 1$$

$MS_{tug} = \mathbf{0.511}$ ***... Margin of Safety Tensile Ultimate***

$$MS_{tyg} := \frac{F_{tyg}}{FS_y \cdot u_{ty}} - 1$$

$MS_{tyg} = \mathbf{1.15}$ ***... Margin of Safety Tensile Yield***

$$MS_{sug} := \frac{F_{sug}}{FS_u \cdot u_{su}} - 1$$

$MS_{sug} = \mathbf{0.94}$ ***... Margin of Safety Shear Ultimate***

Starboard (UPS) - Debris Shield Mounting Brackets, SDG39137848

Allowables

Material Properties

AL ALY 6061-T651, Plate, 0.250-2.000, A, AMS-QQ-A-250/11

$F_{tu} := \mathbf{42000} \cdot psi$ *(Ref. MMPDS-03, Table 3.6.2.0(b2))*

$F_{ty} := \mathbf{36000} \cdot psi$

$F_{su} := \mathbf{27000} \cdot psi$

Factors of Safety

$FS_u := \mathbf{2.0}$ $FS_y := \mathbf{1.25}$

Temperature Reduction Factors

+ At 140°F: (For the Debris Shield, the temperature extremes are -76°F to 140°F; These temperature reduction factors are conservative for liftoff/landing conditions)

- Ultimate: $\beta_u := \mathbf{0.96}$ *(Ref. MMPDS-03, Figure 3.6.2.2.1(a))*

- Yield: $\beta_y := \mathbf{0.96}$ *(Ref. MMPDS-03, Figure 3.6.2.2.1(b))*

Allowable Stresses

$F_{tug} := \beta_u \cdot F_{tu}$

$F_{tug} = \mathbf{40320}\, psi$

$F_{tyg} := \beta_y \cdot F_{ty}$

$F_{tyg} = \mathbf{34560}\, psi$

$F_{sug} := \beta_u \cdot F_{su}$

$F_{sug} = \mathbf{25920}\, psi$

Starboard (UPS) - Debris Shield Mounting Brackets, SDG39137848

Omitted Elements

NASPOST V.2.2 is used to sort the maximum stresses across all load cases. For the Launch and Landing Cases, the elements around the perimeter of bolt holes, where the bolts were modeled with RBE2's, were removed from the NASPOST sort (see table below). These elements had artificially high localized stresses because of their proximity to the RBE2.

(For Omitted Elements, See Appendix A28.4.1.4, p. A28-60)

Starboard (UPS) - Debris Shield Mounting Brackets, SDG39137848

Liftoff Loads

The Debris Shield model was integrated with the AMS-02 payload loads model. For the following analysis, the maximum Von-Mises, Principal, and Shear stresses of plate elements are selected from 64 liftoff load cases (Load Case 1001 - 1064). NASPOST V.2.2 is used to sort the maximum stresses across the load cases. Note that the elements at the bolt holes were removed from the NASPOST sort.

NASTRAN Punch Filename: static-liftoff-full-rev6.pch

Maximum Stresses *(See Appendix A28.3.2)*

$u_{tu} := \mathbf{15932} \cdot psi$ *LC# 1016 ELEM# 3303619* *(Maximum Principal Stress, p.A28-23)*

$u_{ty} := \mathbf{15986} \cdot psi$ *LC# 1016 ELEM# 3303619* *(Maximum Von-Mises Stress, p.A28-23)*

$u_{su} := \mathbf{8247} \cdot psi$ *LC# 1016 ELEM# 3303619* *(Maximum Shear Stress, p.A28-24)*

Margins of Safety

$$MS_{tug} := \frac{F_{tug}}{FS_u \cdot u_{tu}} - 1$$

$MS_{tug} = \mathbf{0.265}$ ***... Margin of Safety Tensile Ultimate***

$$MS_{tyg} := \frac{F_{tyg}}{FS_y \cdot u_{ty}} - 1$$

$MS_{tyg} = \mathbf{0.73}$ ***... Margin of Safety Tensile Yield***

$$MS_{sug} := \frac{F_{sug}}{FS_u \cdot u_{su}} - 1$$

$MS_{sug} = \mathbf{0.57}$ ***... Margin of Safety Shear Ultimate***

Starboard (UPS) - Debris Shield Mounting Brackets, SDG39137848

Landing Loads

The Debris Shield model was integrated with the AMS-02 payload loads model. For the following analysis, the maximum Von-Mises, Principal, and Shear stresses of plate elements are selected from 64 landing load cases (Load Case 2001 - 2064). NASPOST V.2.2 is used to sort the maximum stresses across the load cases. Note that the elements at the bolt holes were removed from the NASPOST sort.

NASTRAN Punch Filename: static-landing-full-rev6.pch

Maximum Stresses *(See Appendix A28.3.1)*

$u_{tu} := 11150 \cdot psi$ *LC# 2016 ELEM# 3303619* *(Maximum Principal Stress, p.A28-21)*

$u_{ty} := 11184 \cdot psi$ *LC# 2016 ELEM# 3303619* *(Maximum Von-Mises Stress, p.A28-22)*

$u_{su} := 5772 \cdot psi$ *LC# 2016 ELEM# 3303619* *(Maximum Shear Stress, p.A28-22)*

Margins of Safety

$$MS_{tug} := \frac{F_{tug}}{FS_u \cdot u_{tu}} - 1$$

$MS_{tug} = 0.808$ ***... Margin of Safety Tensile Ultimate***

$$MS_{tyg} := \frac{F_{tyg}}{FS_y \cdot u_{ty}} - 1$$

$MS_{tyg} = 1.47$ ***... Margin of Safety Tensile Yield***

$$MS_{sug} := \frac{F_{sug}}{FS_u \cdot u_{su}} - 1$$

$MS_{sug} = 1.25$ ***... Margin of Safety Shear Ultimate***

Starboard (UPS) - Debris Shield Interface Joint Bracket, SDG39137847

Allowables

Material Properties

AL ALY 7075-T7351, Plate, 1.501-2.000, A, AMS-QQ-A-250/12

$F_{tu} := \mathbf{66000} \cdot psi$ *(Ref. MMPDS-03, Table 3.7.7.0(b3))*

$F_{ty} := \mathbf{55000} \cdot psi$

$F_{su} := \mathbf{39000} \cdot psi$

Factors of Safety

$FS_u := \mathbf{2.0}$ $FS_y := \mathbf{1.25}$

Temperature Reduction Factors

+ At 140°F: (For the Debris Shield, the temperature extremes are -76°F to 140°F; These temperature reduction factors are conservative for liftoff/landing conditions)

- Ultimate: $\beta_u := \mathbf{0.96}$ *(Ref. MMPDS-03, Figure 3.7.7.1.4.)*

- Yield: $\beta_y := \mathbf{0.96}$ *(Ref. MMPDS-03, Figure 3.7.7.1.4.)*

Allowable Stresses

$F_{tug} := \beta_u \cdot F_{tu}$

$F_{tug} = \mathbf{63360}\, psi$

$F_{tyg} := \beta_y \cdot F_{ty}$

$F_{tyg} = \mathbf{52800}\, psi$

$F_{sug} := \beta_u \cdot F_{su}$

$F_{sug} = \mathbf{37440}\, psi$

Starboard (UPS) - Debris Shield Interface Joint Bracket, SDG39137847

Omitted Elements

NASPOST V.2.2 is used to sort the maximum stresses across all load cases. For the Launch and Landing Cases, the elements around the perimeter of bolt holes, where the bolts were modeled with RBE2's, were removed from the NASPOST sort (see table below). These elements had artificially high localized stresses because of their proximity to the RBE2.

(For Omitted Elements, See Appendix A28.4.1.4, p. A28-60)

Starboard (UPS) - Debris Shield Interface Joint Bracket, SDG39137847

Liftoff Loads

The Debris Shield model was integrated with the AMS-02 payload loads model. For the following analysis, the maximum Von-Mises, Principal, and Shear stresses of plate elements are selected from 64 liftoff load cases (Load Case 1001 - 1064). NASPOST V.2.2 is used to sort the maximum stresses across the load cases. Note that the elements at the bolt holes were removed from the NASPOST sort.

NASTRAN Punch Filename: static-liftoff-full-rev6.pch

Maximum Stresses *(See Appendix A28.3.2)*

$u_{tu} := 27327 \cdot psi$ *LC# 1018 ELEM# 3310604* *(Maximum Principal Stress, p.A28-24)*

$u_{ty} := 27889 \cdot psi$ *LC# 1018 ELEM# 3310604* *(Maximum Von-Mises Stress, p.A28-24)*

$u_{su} := 14209 \cdot psi$ *LC# 1018 ELEM# 3310604* *(Maximum Shear Stress, p.A28-24)*

Margins of Safety

$$MS_{tug} := \frac{F_{tug}}{FS_u \cdot u_{tu}} - 1$$

$MS_{tug} = 0.159$ ***... Margin of Safety Tensile Ultimate***

$$MS_{tyg} := \frac{F_{tyg}}{FS_y \cdot u_{ty}} - 1$$

$MS_{tyg} = 0.51$ ***... Margin of Safety Tensile Yield***

$$MS_{sug} := \frac{F_{sug}}{FS_u \cdot u_{su}} - 1$$

$MS_{sug} = 0.32$ ***... Margin of Safety Shear Ultimate***

Starboard (UPS) - Debris Shield Interface Joint Bracket, SDG39137847

Landing Loads

The Debris Shield model was integrated with the AMS-02 payload loads model. For the following analysis, the maximum Von-Mises, Principal, and Shear stresses of plate elements are selected from 64 landing load cases (Load Case 2001 - 2064). NASPOST V.2.2 is used to sort the maximum stresses across the load cases. Note that the elements at the bolt holes were removed from the NASPOST sort.

NASTRAN Punch Filename: static-landing-full-rev6.pch

Maximum Stresses *(See Appendix A28.3.1)*

$u_{tu} := 29247 \cdot psi$ *LC# 2031 ELEM# 3306789* *(Maximum Principal Stress, p.A28-22)*

$u_{ty} := 28298 \cdot psi$ *LC# 2032 ELEM# 3307218* *(Maximum Von-Mises Stress, p.A28-22)*

$u_{su} := 14960 \cdot psi$ *LC# 2032 ELEM# 3307218* *(Maximum Shear Stress, p.A28-23)*

Margins of Safety

$$MS_{tug} := \frac{F_{tug}}{FS_u \cdot u_{tu}} - 1$$

$MS_{tug} = 0.083$ ***... Margin of Safety Tensile Ultimate***

$$MS_{tyg} := \frac{F_{tyg}}{FS_y \cdot u_{ty}} - 1$$

$MS_{tyg} = 0.49$ ***... Margin of Safety Tensile Yield***

$$MS_{sug} := \frac{F_{sug}}{FS_u \cdot u_{su}} - 1$$

$MS_{sug} = 0.25$ ***... Margin of Safety Shear Ultimate***

5.10.2.1 Starboard Debris Shield Assembly Bolt Analysis

Intentionally Left Blank

Prepared By	Name Kent Peters	Date 08/21/2008	Engineering and Science Contract Group *Structural Analysis Section*	File Name DS UPS TabAngle to LVC
Checked By	C. Bala			Drawing No. SDG39137847
Title	Debris Shield Fastener Joint Analysis for Bolt/Washer with Insert UPS Side - Tab Angle Bracket to Lower Vacuum Case			

CHECK

Bolt := "SDG39135892-828, NAS1008-8A, .5000-20, .500 GRIP, CRES A286"

Washer := "NAS1587-8C"

Insert := "MS51831CA206, .500-20, CRES A286, 160 KSI"

Flange_1 := "Tab Angle Bracket"
Part_Number_1 := "SDG39137847"
Material_1 := "AL ALY 6061-T651 Sheet"

Flange_2 := "Lower Vacuum Case"
Part_Number_2 := "SDG39135737"
Material_2 := "AL ALY 7050-T7451"

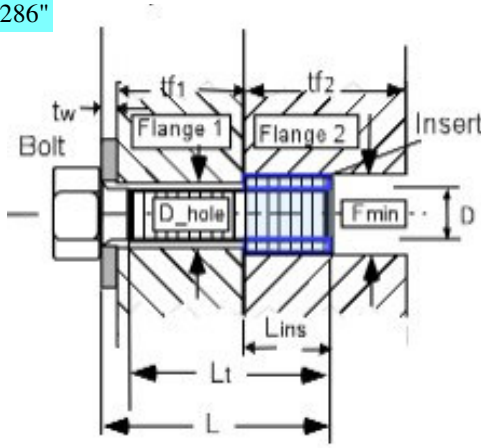

Loads

Applied tensile load $P := 201 \cdot lbf$

Applied shear load $V := 357 \cdot lbf$

Applied bending moment $M := 0 \cdot in \cdot lbf$

Factors of Safety

Ultimate $SFu := 2.0$ Yield $SFy := 1.25$

Joint Separation $SFsep := 1.2$ Fitting factor $FF := 1.15$

Temperature data

Assembly $Temp_initial := 70 \cdot deg$

Maximum $Temp_max := 140 \cdot deg$

Minimum $Temp_min := -76 \cdot deg$

Bolt and Insert Data

Nominal diameter of bolt $D := .5 \cdot in$

Number of threads/inch $Nt := 20 \cdot \frac{1}{in}$

Total length of bolt $L := 1.342 \cdot in$

Length of insert $Lins := .688 \cdot in$

Threaded length $Lt := .842 \cdot in$

Min. external diameter of insert $Fmin := .615 \cdot in$

(If bolt is fully threaded, input Lt = L)

Depth of recess for insert $lr := 0.02 \cdot in$

This file uses the calculations shown in \\escfil02\2i11_mathcad\8307_bolts\thread_data.mcd

Tue Feb 15 10:38:17 AM 2005

Washer Data

Thickness of washer $tw := .078 \cdot in$

Outer Diameter of washer $Dw := .875in$

Inner Diameter of washer $Dwi := .504 \cdot in$

Bolt head dia. across flats $dw := .741 \cdot in$ (used only if there is no washer)

Flange data

Thickness of flange 1 $tf1 := .38 \cdot in$

Thickness of flange 2 $tf2 := .75in$

Diameter of hole $D_hole := .531 \cdot in$

Note: If there is no washer, tw, Dw, and Dwi should be zero.

Prepared By	Name Kent Peters	Date 08/21/2008	Engineering and Science Contract Group *Structural Analysis Section*	File Name DS UPS TabAngle to LVC
Checked By	C. Bala			Drawing No. SDG39137847
Title	Debris Shield Fastener Joint Analysis for Bolt/Washer with Insert UPS Side - Tab Angle Bracket to Lower Vacuum Case			

Material Property Data

Bolt

Temperature correction factor for bolt strength ultimate $TSu_bolt := .96$ yield $TSy_bolt := .96$

Bolt ultimate tensile allowable stress $Ftu_bolt := 140000 \cdot psi$

Bolt ultimate shear allowable stress $Fsu_bolt := 0.6 \cdot Ftu_bolt$

Bolt yield tensile allowable $Fty_bolt := 95000 \cdot psi$

Temperature correction factor for bolt modulus $TE_bolt := .98$

Modulus of elasticity of bolt $E_bolt := \left(29.1 \cdot 10^{6} \cdot psi\right)$

Thermal coefficient for bolt:

$$\beta_bolt_hot := 9.1 \cdot 10^{-6} \cdot \frac{\frac{in}{in}}{deg}$$

$$\beta_bolt_cold := 8.5 \cdot 10^{-6} \cdot \frac{\frac{in}{in}}{deg}$$

Insert

Temperature correction factor for insert strength $TS_ins := .96$

Ultimate tensile allowable stress $Ftu_ins := 140000 \cdot psi$

Ultimate shear allowable stress $Fsu_ins := 0.6 \cdot Ftu_ins$

Washer

Temperature correction factor for washer modulus $TE_washer := 1.0$

Modulus of elasticity of washer $E_washer := \left(29.1 \cdot 10^{6} \cdot psi\right)$

Flanges

Stiffness of the joint depends upon number of members in the grip of the fasteners,
Modulus of elasticity of these members, and diameters of the bolt and the washer.

Temperature correction factor for flange 1 $Tf1E := .98$ (modulus) $Tf2s := 0.91$ (strength)

Temperature correction factor for flange 2 $Tf2E := .98$ (modulus) $Fsu_f2 := 43000 \cdot psi$

Modulus of elasticity for the parts in the joint $E_flange1 := \left(10.1 \cdot 10^{6} \cdot psi\right)$ $E_flange2 := \left(10.8 \cdot 10^{6} \cdot psi\right)$

Coefficient of thermal expansion for flanges

$$\beta_flange1_hot := 12.8 \cdot 10^{-6} \cdot \frac{\frac{in}{in}}{deg} \quad \beta_flange2_hot := 12.5 \cdot 10^{-6} \cdot \frac{\frac{in}{in}}{deg}$$

$$\beta_flange1_cold := 12.1 \cdot 10^{-6} \cdot \frac{\frac{in}{in}}{deg} \quad \beta_flange2_cold := 12.1 \cdot 10^{-6} \cdot \frac{\frac{in}{in}}{deg}$$

Torque/Preload data

Maximum torque $Tmax := 651 \cdot in \cdot lbf$

Loading plane factor: $n := 0.5$

Minimum torque $Tmin := 553 \cdot in \cdot lbf$

Preload Uncertainty: $u := 0.25$

Torque coefficient: $k := 0.15$

This file uses the calculations shown in \\escfil02\2i11_mathcad\8307_bolts\bolt_stiffness_insert_RevC

Bolt Load data

Bolt/joint stiffness factor	$= 0.646$	Preload due to temperature	$Pthr_pos = 586.1 \cdot lbf$
Max. preload	$PLDmax = 11436.1 \cdot lbf$		$Pthr_neg = -1255.6 \cdot lbf$
Min. preload	$PLDmin = 3731.9 \cdot lbf$	Uncertainty factor	$u = 0.25$
Joint separation load	$Psep = 241.2 \cdot lbf$	Torque coefficient	$k = 0.15$
Max. load on the bolt(ultimate)	$Pb = 11585.4 \cdot lbf$	Loading plane factor	$n = 0.5$
Max. load on the bolt(yield)	$Pby = 11529.4 \cdot lbf$	Thread shear pullout load of bolt or insert	$Pths = 51164.1 \cdot lbf$
Bolt ultimate tensile strength	$PAt = 21111.4 \cdot lbf$	Thread shear pullout load in parent metal	$Ppths = 26007.2 \cdot lbf$

Length_check = "Bolt length is sufficient"

Summary of Margins for bolt:

Joint separation	$MS_1 = 18.88$	Direct Thread shear Ultimate	$MS_6 = 55.26$
Direct Tension Ultimate	$MS_2 = 44.67$	Total Thread shear Ultimate	$MS_7 = 1.24$
Direct Tension Yield	$MS_3 = 48.58$	Shear Ultimate	$MS_8 = 13.6$
Total Tension Ultimate	$MS_4 = 0.82$	Bending Ultimate	$MS_9 = 10$
Total Tension Yield	$MS_5 = 0.243$	Combined shear, tension and bending ultimate	$MS_{10} = 0.82$

Determination of the smallest margin of safety for the bolt, and the failure mode:

$$MSbolt := \min(MS)$$

$MSbolt = 0.243$ Failure_Mode = "Total Tension Yield"

Fail-safe Analysis

Fail-safe Loads

Applied tensile load $P_FS := 240 \cdot lbf$

Applied shear load $V_FS := 666 \cdot lbf$

Applied bending moment $M_FS := 0 \cdot in \cdot lbf$

Fail-safe Factors of Safety

Ultimate $SFu_FS := 1.0$

Joint Separation $SFsep_FS := 1.0$

This file uses the calculations shown in \\escfil02\2i11_mathcad\8307_bolts\bolt_stiffness_insert_FS_RevC

Mon Feb 14 12:51:39 2005

Bolt Fail-safe Load data

Joint separation load $Psep_FS = 240 \cdot lbf$

Max. load on the bolt(ultimate) $Pb_FS = 11525.2 \cdot lbf$

Summary of fail-safe Margins for bolt:

Joint separation	$MS_FS_1 = 18.97$	Total Thread shear Ultimate	$MS_FS_5 = 1.26$
Direct Tension Ultimate	$MS_FS_2 = 75.49$	Shear Ultimate	$MS_FS_6 = 14.65$
Total Tension Ultimate	$MS_FS_3 = 0.83$	Bending Ultimate	$MS_FS_7 = 10$
Direct Thread shear Ultimate	$MS_FS_4 = 93.23$	Combined shear, tension and bending ultimate	$MS_FS_8 = 0.83$

Determination of the smallest fail-safe margin of safety for the bolt, and the failure mode:

$$MSbolt_FS := \min(MS_FS)$$

$MSbolt_FS = 0.83$ Failure_Mode_FS = "Combined Shear Tension Bending Ultimate"

Prepared By	Name Kent Peters	Date 08/21/2008	Engineering and Science Contract Group *Structural Analysis Section*	File Name DS UPS TabAngle to LVC
Checked By	C. Bala			Drawing No. SDG39137847
Title	Debris Shield Fastener Joint Analysis for Bolt/Washer with Insert UPS Side - Tab Angle Bracket to Lower Vacuum Case			

Bolt Hole Analysis

Minimum edge distance of flange one $edge1 := 0.470 \cdot in$

Minimum edge distance of flange two $edge2 := 0.812 \cdot in$

Shank diameter of bolt $D_shank := .4970 \cdot in$

Recall loads from bolt calculation

Safety Factors	$SFu = 2.000$	*(Ultimate)*	$SFy = 1.25$	*(Yield)*
	$FF = 1.15$	*(Fitting Factor)*		
Input Loads	$V = 357 \cdot lbf$	*(Shear Load)*	$P = 201 \cdot lbf$	*(Axial Load)*
Bolt calc results	$Pb = 11585 \cdot lbf$	*(Max Bolt Load)*		
Dimensions	$L = 1.342 \cdot in$	*(Length of Bolt)*	$tw = 0.078 \cdot in$	*(Thickness of Washer)*

Shear Tear-Out Check

Recall bolt hole dimensions

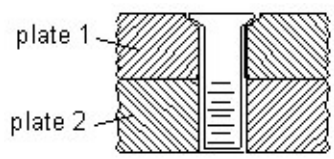

$tf_1 := tf1$ $\quad tf_1 = 0.38 \cdot in$ *(Entire Thickness of Flange 1)* $\quad Tf1E = 0.98$

$tf_2 := tf2$ $\quad tf_2 = 0.75 \cdot in$ *(Entire Thickness of Flange 2)* $\quad Tf2E = 0.98$

$edge_1 := edge1$ $\quad edge_1 = 0.47 \cdot in$ *(Edge Distance for Hole in Plate 1)*

$edge_2 := edge2$ $\quad edge_2 = 0.812 \cdot in$ *(Edge Distance for Hole in Plate 2)*

$D = 0.5 \cdot in$ *(Diameter of Bolt)*

$D_shank = 0.497 \cdot in$ *(Min. Shank Diameter of Bolt)*

$D_hole = 0.531 \cdot in$ *(Diameter of Hole)*

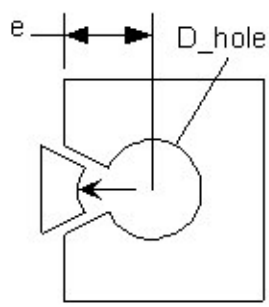

Typical shear tear-out failure

Shear area of the mating components ***(Ref. Analysis & Design of Flight Vehicle Structures, Bruhn, Pg. D1.5)***

$$A_{shrpl} := \overrightarrow{\left[2 \cdot tf \cdot \left(edge - \frac{1}{2} D_hole\right)\right]} \qquad \begin{pmatrix} Plate1 \\ Plate2 \end{pmatrix} \qquad A_{shrpl} = \begin{pmatrix} 0.155 \\ 0.82 \end{pmatrix} \cdot in^2$$

Allowables for plates that fastener goes through

$Fsu_1 := Tf1E \cdot 27 \cdot ksi$ $\quad Fsu_1 = 26.46 \cdot ksi$ *(Ultimate Shear Allowable for Plate 1)*

$Fsu_2 := Tf2E \cdot 43 \cdot ksi$ $\quad Fsu_2 = 42.14 \cdot ksi$ *(Ultimate Shear Allowable for Plate 2)*

$P_{su} := \overrightarrow{(A_{shrpl} \cdot Fsu)}$ $\quad P_{su} = \begin{pmatrix} 4112 \\ 34544 \end{pmatrix} \cdot lbf$ *(Shear Ultimate Allowable)*

MS for Shear Tear-Out

$$MS_{su} := \overrightarrow{\left(\frac{P_{su}}{V \cdot SFu \cdot FF} - 1\right)} \qquad \begin{pmatrix} \text{Plate1} \\ \text{Plate2} \end{pmatrix} \qquad MS_{su} = \begin{pmatrix} 4.01 \\ 41.07 \end{pmatrix}$$

$MS_{bh_1} := \min(MS_{su})$ $\qquad MS_{bh_1} = 4.008$ $\qquad$ ***... Shear Tear-Out MS***

Bearing Check

Recall bolt hole dimensions

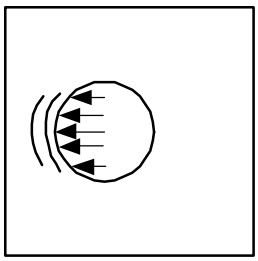

Typical Bearing Failure

$tf_1 = 0.38 \cdot in$ *(Thickness of Plate 1)*

$tf_2 = 0.75 \cdot in$ *(Thickness of Plate 2)*

$edge_1 = 0.47 \cdot in$ *(Edge Distance for thru Hole in Plate 1)*

$edge_2 = 0.812 \cdot in$ *(Edge Distance for tapped Hole in Plate 2)*

$$A_{br} := \overrightarrow{(tf \cdot \min(D, D_shank))} \qquad \begin{pmatrix} \text{Plate1} \\ \text{Plate2} \end{pmatrix} \qquad A_{br} = \begin{pmatrix} 0.189 \\ 0.373 \end{pmatrix} \cdot in^2$$

(Bearing Areas)

$$e_D := \frac{\overrightarrow{edge}}{D_hole} \qquad e_D = \begin{pmatrix} 0.885 \\ 1.529 \end{pmatrix}$$

(e/D for Plates)

Allowables for plates that fastener goes through

Bearing strength at e/D = 1.5

$Fbru15_1 := Tf1E \cdot 67ksi$ $\qquad Fbru15_1 = 65.66 \cdot ksi$

$Fbry15_1 := Tf1E \cdot 50 \cdot ksi$ $\qquad Fbry15_1 = 49 \cdot ksi$

$Fbru15_2 := Tf2E \cdot 107ksi$ $\qquad Fbru15_2 = 104.86 \cdot ksi$

$Fbry15_2 := Tf2E \cdot 86 \cdot ksi$ $\qquad Fbry15_2 = 84.28 \cdot ksi$

Bearing strength at e/D = 2.0

$Fbru20_1 := Tf1E \cdot 88ksi$ $\qquad Fbru20_1 = 86.24 \cdot ksi$

$Fbry20_1 := Tf1E \cdot 58 \cdot ksi$ $\qquad Fbry20_1 = 56.84 \cdot ksi$

$Fbru20_2 := Tf2E \cdot 140ksi$ $\qquad Fbru20_2 = 137.2 \cdot ksi$

$Fbry20_2 := Tf2E \cdot 101 \cdot ksi$ $\qquad Fbry20_2 = 98.98 \cdot ksi$

Modified bearing strength

$$Fbru_m_1 := if\left[e_D_1 > 2.0, Fbru20_1, if\left[(e_D_1 > 1.5)\cdot(e_D_1 < 2.0), Fbru15_1 + \frac{e_D_1 - 1.5}{2.0 - 1.5}\cdot(Fbru20_1 - Fbru15_1), \left[Fbru15_1\cdot(e_D_1 - 0.5)\right]\right]\right]$$

$$Fbru_m_2 := if\left[e_D_2 > 2.0, Fbru20_2, if\left[(e_D_2 > 1.5)\cdot(e_D_2 < 2.0), Fbru15_2 + \frac{e_D_2 - 1.5}{2.0 - 1.5}\cdot(Fbru20_2 - Fbru15_2), \left[Fbru15_2\cdot(e_D_2 - 0.5)\right]\right]\right]$$

$$Fbry_m_1 := if\left[e_D_1 > 2.0, Fbry20_1, if\left[(e_D_1 > 1.5)\cdot(e_D_1 < 2.0), Fbry15_1 + \frac{e_D_1 - 1.5}{2.0 - 1.5}\cdot(Fbry20_1 - Fbry15_1), \left[Fbry15_1\cdot(e_D_1 - 0.5)\right]\right]\right]$$

$$Fbry_m_2 := if\left[e_D_2 > 2.0, Fbry20_2, if\left[(e_D_2 > 1.5)\cdot(e_D_2 < 2.0), Fbry15_2 + \frac{e_D_2 - 1.5}{2.0 - 1.5}\cdot(Fbry20_2 - Fbry15_2), \left[Fbry15_2\cdot(e_D_2 - 0.5)\right]\right]\right]$$

$$Fbru_m = \begin{pmatrix} 25.287 \\ 106.748 \end{pmatrix} \begin{pmatrix} Plate1 \\ Plate2 \end{pmatrix}$$ *(Ultimate)*

$$Fbry_m = \begin{pmatrix} 18.871 \\ 85.138 \end{pmatrix} \begin{pmatrix} Plate1 \\ Plate2 \end{pmatrix}$$ *(Yield)*

$$P_{bru} := \overrightarrow{(A_{br}\cdot Fbru_m)} \qquad P_{bru} = \begin{pmatrix} 4776 \\ 39790 \end{pmatrix}\cdot lbf$$ *(Bearing Ultimate Allowable)*

$$P_{bry} := \overrightarrow{(A_{br}\cdot Fbry_m)} \qquad P_{bry} = \begin{pmatrix} 3564 \\ 31735 \end{pmatrix}\cdot lbf$$ *(Bearing Yield Allowable)*

MS for Bearing Failure

$$MS_{bru} := \overrightarrow{\left(\frac{P_{bru}}{V\cdot SFu\cdot FF} - 1\right)} \qquad MS_{bru} = \begin{pmatrix} 4.816 \\ 47.46 \end{pmatrix} \qquad \begin{pmatrix} Plate1 \\ Plate2 \end{pmatrix}$$

$$MS_{bh_2} := \min(MS_{bru}) \qquad MS_{bh_2} = 4.816$$ ***... Bearing MS based on Ultimate Strength***

$$MS_{bry} := \overrightarrow{\left(\frac{P_{bry}}{V \cdot SFy \cdot FF} - 1\right)} \qquad MS_{bry} = \begin{pmatrix} 5.94 \\ 60.84 \end{pmatrix} \qquad \begin{pmatrix} Plate1 \\ Plate2 \end{pmatrix}$$

$$MS_{bh_3} := \min(MS_{bry}) \qquad MS_{bh_3} = 5.945$$

... Bearing MS based on Yield Strength

Prepared By	Name	Date	Engineering and Science Contract Group	File Name
	Kent Peters	08/21/2008		DS UPS TabAngle to UVC
Checked By	C. Bala		*Structural Analysis Section*	Drawing No. SDG39137847
Title	Debris Shield Fastener Joint Analysis for Bolt/Washer with Insert UPS Side - Tab Angle Bracket to Upper Vacuum Case			

CHECK

Bolt := "SDG39135892-828, NAS1008-8A, .5000-20, .500 GRIP, CRES A286"

Washer := "NAS1587-8C"

Insert := "MS51831CA206, .500-20, CRES A286, 160 KSI"

Flange_1 := "Tab Angle Bracket"
Part_Number_1 := "SDG39137847"
Material_1 := "AL ALY 6061-T651 Sheet"

Flange_2 := "Upper Vacuum Case"
Part_Number_2 := "SDG39135727"
Material_2 := "AL ALY 7050-T7451"

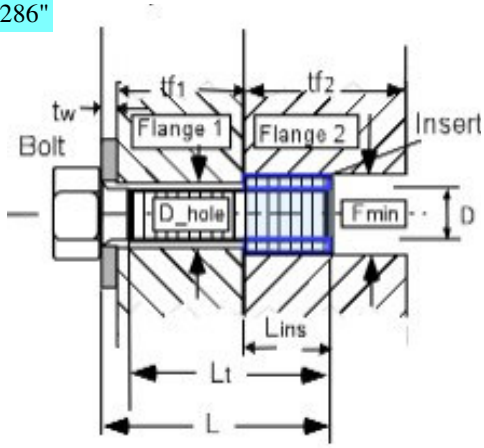

Loads

Applied tensile load $P := 201 \cdot lbf$

Applied shear load $V := 357 \cdot lbf$

Applied bending moment $M := 0 \cdot in \cdot lbf$

Factors of Safety

Ultimate $SFu := 2.0$ Yield $SFy := 1.25$

Joint Separation $SFsep := 1.2$ Fitting factor $FF := 1.15$

Temperature data

Assembly $Temp_initial := 70 \cdot deg$

Maximum $Temp_max := 140 \cdot deg$

Minimum $Temp_min := -76 \cdot deg$

Bolt and Insert Data

Nominal diameter of bolt $D := .5 \cdot in$

Number of threads/inch $Nt := 20 \cdot \frac{1}{in}$

Total length of bolt $L := 1.342 \cdot in$

Length of insert $Lins := .688 \cdot in$

Threaded length $Lt := .842 \cdot in$

Min. external diameter of insert $Fmin := .615 \cdot in$

(If bolt is fully threaded, input Lt = L)

Depth of recess for insert $lr := 0.02 \cdot in$

This file uses the calculations shown in \\escfil02\2i11_mathcad\8307_bolts\thread_data.mcd

Tue Feb 15 10:38:17 AM 2005

Washer Data

Thickness of washer $tw := .078 \cdot in$

Outer Diameter of washer $Dw := .875in$

Inner Diameter of washer $Dwi := .504 \cdot in$

Bolt head dia. across flats $dw := .741 \cdot in$ (used only if there is no washer)

Flange data

Thickness of flange 1 $tf1 := .38 \cdot in$

Thickness of flange 2 $tf2 := .75in$

Diameter of hole $D_hole := .531 \cdot in$

Note: If there is no washer, tw, Dw, and Dwi should be zero.

Material Property Data

Bolt

Temperature correction factor for bolt strength ultimate $TSu_bolt := .96$ yield $TSy_bolt := .96$

Bolt ultimate tensile allowable stress $Ftu_bolt := 140000 \cdot psi$

Bolt ultimate shear allowable stress $Fsu_bolt := 0.6 \cdot Ftu_bolt$

Bolt yield tensile allowable $Fty_bolt := 95000 \cdot psi$

Temperature correction factor for bolt modulus $TE_bolt := .98$

Modulus of elasticity of bolt $E_bolt := \left(29.1 \cdot 10^{6} \cdot psi\right)$

Thermal coefficient for bolt:

$$\beta_bolt_hot := 9.1 \cdot 10^{-6} \cdot \frac{\frac{in}{in}}{deg}$$

$$\beta_bolt_cold := 8.5 \cdot 10^{-6} \cdot \frac{\frac{in}{in}}{deg}$$

Insert

Temperature correction factor for insert strength $TS_ins := .96$

Ultimate tensile allowable stress $Ftu_ins := 140000 \cdot psi$

Ultimate shear allowable stress $Fsu_ins := 0.6 \cdot Ftu_ins$

Washer

Temperature correction factor for washer modulus $TE_washer := 1.0$

Modulus of elasticity of washer $E_washer := \left(29.1 \cdot 10^{6} \cdot psi\right)$

Flanges

Stiffness of the joint depends upon number of members in the grip of the fasteners,
Modulus of elasticity of these members, and diameters of the bolt and the washer.

Temperature correction factor for flange 1 $Tf1E := .98$ (modulus) $Tf2s := 0.91$ (strength)

Temperature correction factor for flange 2 $Tf2E := .98$ (modulus) $Fsu_f2 := 43000 \cdot psi$

Modulus of elasticity for the parts in the joint $E_flange1 := \left(10.1 \cdot 10^{6} \cdot psi\right)$ $E_flange2 := \left(10.8 \cdot 10^{6} \cdot psi\right)$

Coefficient of thermal expansion for flanges

$$\beta_flange1_hot := 12.8 \cdot 10^{-6} \cdot \frac{\frac{in}{in}}{deg} \quad \beta_flange2_hot := 12.5 \cdot 10^{-6} \cdot \frac{\frac{in}{in}}{deg}$$

$$\beta_flange1_cold := 12.1 \cdot 10^{-6} \cdot \frac{\frac{in}{in}}{deg} \quad \beta_flange2_cold := 12.1 \cdot 10^{-6} \cdot \frac{\frac{in}{in}}{deg}$$

Torque/Preload data

Maximum torque $Tmax := 651 \cdot in \cdot lbf$

Loading plane factor: $n := 0.5$

Minimum torque $Tmin := 553 \cdot in \cdot lbf$

Preload Uncertainty: $u := 0.25$

Torque coefficient: $k := 0.15$

This file uses the calculations shown in \\escfil02\2i11_mathcad\8307_bolts\bolt_stiffness_insert_RevC

Bolt Load data

Bolt/joint stiffness factor	$= 0.646$	Preload due to temperature	$Pthr_pos = 586.1 \cdot lbf$
Max. preload	$PLDmax = 11436.1 \cdot lbf$		$Pthr_neg = -1255.6 \cdot lbf$
Min. preload	$PLDmin = 3731.9 \cdot lbf$	Uncertainty factor	$u = 0.25$
Joint separation load	$Psep = 241.2 \cdot lbf$	Torque coefficient	$k = 0.15$
Max. load on the bolt(ultimate)	$Pb = 11585.4 \cdot lbf$	Loading plane factor	$n = 0.5$
Max. load on the bolt(yield)	$Pby = 11529.4 \cdot lbf$	Thread shear pullout load of bolt or insert	$Pths = 51164.1 \cdot lbf$
Bolt ultimate tensile strength	$PAt = 21111.4 \cdot lbf$	Thread shear pullout load in parent metal	$Ppths = 26007.2 \cdot lbf$

Length_check = "Bolt length is sufficient"

Summary of Margins for bolt:

Joint separation	$MS_1 = 18.88$	Direct Thread shear Ultimate	$MS_6 = 55.26$
Direct Tension Ultimate	$MS_2 = 44.67$	Total Thread shear Ultimate	$MS_7 = 1.24$
Direct Tension Yield	$MS_3 = 48.58$	Shear Ultimate	$MS_8 = 13.6$
Total Tension Ultimate	$MS_4 = 0.82$	Bending Ultimate	$MS_9 = 10$
Total Tension Yield	$MS_5 = 0.243$	Combined shear, tension and bending ultimate	$MS_{10} = 0.82$

Determination of the smallest margin of safety for the bolt, and the failure mode:

$MSbolt := \min(MS)$

$MSbolt = 0.243$ Failure_Mode = "Total Tension Yield"

Fail-safe Analysis

Fail-safe Loads

Applied tensile load $P_FS := 240 \cdot lbf$

Applied shear load $V_FS := 666 \cdot lbf$

Applied bending moment $M_FS := 0 \cdot in \cdot lbf$

Fail-safe Factors of Safety

Ultimate $SFu_FS := 1.0$

Joint Separation $SFsep_FS := 1.0$

This file uses the calculations shown in \\escfil02\2i11_mathcad\8307_bolts\bolt_stiffness_insert_FS_RevC

Mon Feb 14 12:51:39 2005

Bolt Fail-safe Load data

Joint separation load $Psep_FS = 240 \cdot lbf$

Max. load on the bolt(ultimate) $Pb_FS = 11525.2 \cdot lbf$

Summary of fail-safe Margins for bolt:

Joint separation	$MS_FS_1 = 18.97$	Total Thread shear Ultimate	$MS_FS_5 = 1.26$
Direct Tension Ultimate	$MS_FS_2 = 75.49$	Shear Ultimate	$MS_FS_6 = 14.65$
Total Tension Ultimate	$MS_FS_3 = 0.83$	Bending Ultimate	$MS_FS_7 = 10$
Direct Thread shear Ultimate	$MS_FS_4 = 93.23$	Combined shear, tension and bending ultimate	$MS_FS_8 = 0.83$

Determination of the smallest fail-safe margin of safety for the bolt, and the failure mode:

$MSbolt_FS := \min(MS_FS)$

$MSbolt_FS = 0.83$ Failure_Mode_FS = "Combined Shear Tension Bending Ultimate"

Bolt Hole Analysis

Minimum edge distance of flange one $edge1 := 0.470 \cdot in$

Minimum edge distance of flange two $edge2 := 0.844 \cdot in$

Shank diameter of bolt $D_shank := .4970 \cdot in$

Recall loads from bolt calculation

Safety Factors	$SFu = 2.000$	*(Ultimate)*	$SFy = 1.25$	*(Yield)*
	$FF = 1.15$	*(Fitting Factor)*		
Input Loads	$V = 357 \cdot lbf$	*(Shear Load)*	$P = 201 \cdot lbf$	*(Axial Load)*
Bolt calc results	$Pb = 11585 \cdot lbf$	*(Max Bolt Load)*		
Dimensions	$L = 1.342 \cdot in$	*(Length of Bolt)*	$tw = 0.078 \cdot in$	*(Thickness of Washer)*

Shear Tear-Out Check

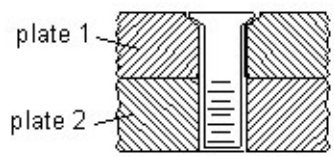

Recall bolt hole dimensions

$tf_1 := tf1$ $\quad tf_1 = 0.38 \cdot in$ *(Entire Thickness of Flange 1)* $\quad Tf1E = 0.98$

$tf_2 := tf2$ $\quad tf_2 = 0.75 \cdot in$ *(Entire Thickness of Flange 2)* $\quad Tf2E = 0.98$

$edge_1 := edge1$ $\quad edge_1 = 0.47 \cdot in$ *(Edge Distance for Hole in Plate 1)*

$edge_2 := edge2$ $\quad edge_2 = 0.844 \cdot in$ *(Edge Distance for Hole in Plate 2)*

$D = 0.5 \cdot in$ *(Diameter of Bolt)*

$D_shank = 0.497 \cdot in$ *(Min. Shank Diameter of Bolt)*

$D_hole = 0.531 \cdot in$ *(Diameter of Hole)*

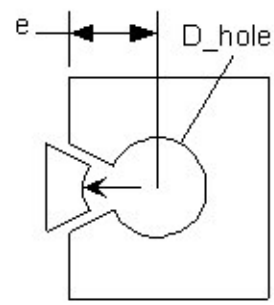

Typical shear tear-out failure

Shear area of the mating components ***(Ref. Analysis & Design of Flight Vehicle Structures, Bruhn, Pg. D1.5)***

$$A_{shrpl} := \overrightarrow{\left[2 \cdot tf \cdot \left(edge - \frac{1}{2} D_hole\right)\right]} \qquad \begin{pmatrix} Plate1 \\ Plate2 \end{pmatrix} \qquad A_{shrpl} = \begin{pmatrix} 0.155 \\ 0.868 \end{pmatrix} \cdot in^2$$

Allowables for plates that fastener goes through

$Fsu_1 := Tf1E \cdot 27 \cdot ksi$ $\quad Fsu_1 = 26.46 \cdot ksi$ *(Ultimate Shear Allowable for Plate 1)*

$Fsu_2 := Tf2E \cdot 43 \cdot ksi$ $\quad Fsu_2 = 42.14 \cdot ksi$ *(Ultimate Shear Allowable for Plate 2)*

$$P_{su} := \overrightarrow{\left(A_{shrpl} \cdot Fsu\right)} \qquad P_{su} = \begin{pmatrix} 4112 \\ 36567 \end{pmatrix} \cdot lbf$$ *(Shear Ultimate Allowable)*

MS for Shear Tear-Out

$$MS_{su} := \overrightarrow{\left(\frac{P_{su}}{V \cdot SFu \cdot FF} - 1\right)} \qquad \begin{pmatrix} Plate1 \\ Plate2 \end{pmatrix} \qquad MS_{su} = \begin{pmatrix} 4.01 \\ 43.53 \end{pmatrix}$$

$MS_{bh_1} := \min(MS_{su})$ $\quad MS_{bh_1} = 4.008$ *... Shear Tear-Out MS*

Bearing Check

Recall bolt hole dimensions

$tf_1 = 0.38 \cdot in$ *(Thickness of Plate 1)*

$tf_2 = 0.75 \cdot in$ *(Thickness of Plate 2)*

$edge_1 = 0.47 \cdot in$ *(Edge Distance for thru Hole in Plate 1)*

$edge_2 = 0.844 \cdot in$ *(Edge Distance for tapped Hole in Plate 2)*

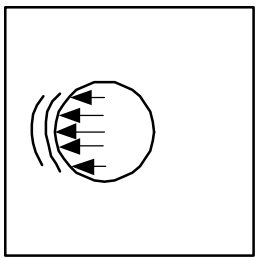

Typical Bearing Failure

$$A_{br} := \overrightarrow{(tf \cdot \min(D, D_shank))} \qquad \begin{pmatrix} Plate1 \\ Plate2 \end{pmatrix} \qquad A_{br} = \begin{pmatrix} 0.189 \\ 0.373 \end{pmatrix} \cdot in^2$$ *(Bearing Areas)*

$$e_D := \overrightarrow{\frac{edge}{D_hole}} \qquad e_D = \begin{pmatrix} 0.885 \\ 1.589 \end{pmatrix}$$ *(e/D for Plates)*

Allowables for plates that fastener goes through

Bearing strength at e/D = 1.5

$Fbru15_1 := Tf1E \cdot 67ksi$ $\quad Fbru15_1 = 65.66 \cdot ksi$

$Fbry15_1 := Tf1E \cdot 50 \cdot ksi$ $\quad Fbry15_1 = 49 \cdot ksi$

$Fbru15_2 := Tf2E \cdot 107ksi$ $\quad Fbru15_2 = 104.86 \cdot ksi$

$Fbry15_2 := Tf2E \cdot 86 \cdot ksi$ $\quad Fbry15_2 = 84.28 \cdot ksi$

Bearing strength at e/D = 2.0

$Fbru20_1 := Tf1E \cdot 88ksi$ $\quad Fbru20_1 = 86.24 \cdot ksi$

$Fbry20_1 := Tf1E \cdot 58 \cdot ksi$ $\quad Fbry20_1 = 56.84 \cdot ksi$

$Fbru20_2 := Tf2E \cdot 140ksi$ $\quad Fbru20_2 = 137.2 \cdot ksi$

$Fbry20_2 := Tf2E \cdot 101 \cdot ksi$ $\quad Fbry20_2 = 98.98 \cdot ksi$

Modified bearing strength

$$Fbru_m_1 := if\left[e_D_1 > 2.0, Fbru20_1, if\left[(e_D_1 > 1.5)\cdot(e_D_1 < 2.0), Fbru15_1 + \frac{e_D_1 - 1.5}{2.0 - 1.5}\cdot(Fbru20_1 - Fbru15_1), \left[Fbru15_1\cdot(e_D_1 - 0.5)\right]\right]\right]$$

$$Fbru_m_2 := if\left[e_D_2 > 2.0, Fbru20_2, if\left[(e_D_2 > 1.5)\cdot(e_D_2 < 2.0), Fbru15_2 + \frac{e_D_2 - 1.5}{2.0 - 1.5}\cdot(Fbru20_2 - Fbru15_2), \left[Fbru15_2\cdot(e_D_2 - 0.5)\right]\right]\right]$$

$$Fbry_m_1 := if\left[e_D_1 > 2.0, Fbry20_1, if\left[(e_D_1 > 1.5)\cdot(e_D_1 < 2.0), Fbry15_1 + \frac{e_D_1 - 1.5}{2.0 - 1.5}\cdot(Fbry20_1 - Fbry15_1), \left[Fbry15_1\cdot(e_D_1 - 0.5)\right]\right]\right]$$

$$Fbry_m_2 := if\left[e_D_2 > 2.0, Fbry20_2, if\left[(e_D_2 > 1.5)\cdot(e_D_2 < 2.0), Fbry15_2 + \frac{e_D_2 - 1.5}{2.0 - 1.5}\cdot(Fbry20_2 - Fbry15_2), \left[Fbry15_2\cdot(e_D_2 - 0.5)\right]\right]\right]$$

$$Fbru_m = \begin{pmatrix} 25.287 \\ 110.646 \end{pmatrix} \begin{pmatrix} Plate1 \\ Plate2 \end{pmatrix}$$ *(Ultimate)*

$$Fbry_m = \begin{pmatrix} 18.871 \\ 86.91 \end{pmatrix} \begin{pmatrix} Plate1 \\ Plate2 \end{pmatrix}$$ *(Yield)*

$$P_{bru} := \overrightarrow{(A_{br}\cdot Fbru_m)} \qquad P_{bru} = \begin{pmatrix} 4776 \\ 41243 \end{pmatrix}\cdot lbf$$ *(Bearing Ultimate Allowable)*

$$P_{bry} := \overrightarrow{(A_{br}\cdot Fbry_m)} \qquad P_{bry} = \begin{pmatrix} 3564 \\ 32396 \end{pmatrix}\cdot lbf$$ *(Bearing Yield Allowable)*

MS for Bearing Failure

$$MS_{bru} := \overrightarrow{\left(\frac{P_{bru}}{V\cdot SFu\cdot FF} - 1\right)} \qquad MS_{bru} = \begin{pmatrix} 4.816 \\ 49.229 \end{pmatrix} \qquad \begin{pmatrix} Plate1 \\ Plate2 \end{pmatrix}$$

$$MS_{bh_2} := \min(MS_{bru}) \qquad MS_{bh_2} = 4.816$$ ***... Bearing MS based on Ultimate Strength***

$$MS_{bry} := \overrightarrow{\left(\frac{P_{bry}}{V \cdot SFy \cdot FF} - 1\right)} \qquad MS_{bry} = \begin{pmatrix} 5.94 \\ 62.13 \end{pmatrix} \qquad \begin{pmatrix} Plate1 \\ Plate2 \end{pmatrix}$$

$$MS_{bh_3} := \min(MS_{bry}) \qquad MS_{bh_3} = 5.945$$

... Bearing MS based on Yield Strength

Prepared By	Name Kent Peters	Date 08/21/2008	Engineering and Science Contract Group *Structural Analysis Section*	File Name DS UPS 2.70in Bathtub to LTBB
Checked By	C. Bala			Drawing No. SDG39137848-002
Title	Debris Shield Fastener Joint Analysis for Bolt/Washer with Nut/Washer UPS Side - 2.70in Bathtub Bracket to Lower Trunnion Bridge Beam			

CHECK

Note: Figure is for reference only.
Not to scale. Actual joint made differ.
Washer may be on nut side, head side, or both

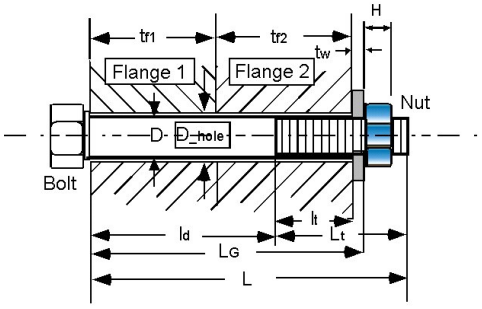

Bolt := **"NAS1351N4-12, .2500-28, 0.750 L, A-286, Heat Resistant Steel"**

Washer := **"NAS1149E0463R, .250 Nom Dia, 0.063 T, A-286, Passivate"**

Nut := **"NAS1291-C4M, .2500-28 UNJF-3B"**

Flange_1 := **"2.70in Bathtub Bracket"**
Part_Number_1 := **"SDG39137848-002"**
Material_1 := **"AL ALY 6061-T651"**

Minimum edge distance of flange one: edge1 := **.347**·in

Flange_2 := **"Lower Trunnion Bridge Beam"**
Part_Number_2 := **"SDG39135735"**
Material_2 := **"AL ALY 7050-T7451"**

Minimum edge distance of flange two: edge2 := **.375**·in

Loads (reference)

Applied tensile load: P := **201**.lbf

Applied shear load: V := **357**.lbf

Applied bending moment: M := **0**in·lbf

(Worst case combination)

Factors of Safety (reference)

SFu := **2.00** *(Ultimate)*

SFy := **1.25** *(Yield)*

FF := **1.15** *(Fitting factor)*

SFsep := **1.20** *(Joint Separation)*

Temperature data (reference)

Assembly: Temp_initial := **70**·deg

Temp_max := **140**·deg *(Maximum)*

Temp_min := **–76**·deg *(Minimum)*

Note: these are maximum temperatures that hardware sees / if maximum load occurs at a different temperature this will be conservative

Bolt Data (Bolt = **"NAS1351N4-12, .2500-28, 0.750 L, A-286, Heat Resistant Steel"**)

Nominal diameter of bolt: D := **.2500**·in

Number of threads/inch: Nt := **28**·$\frac{1}{in}$

Shank diameter of bolt: D_shank := **.2435**·in

Note: if there is a retainer groove in the fastener, this should be the calculated diameter to give an equivalent cross sectional area

Total length of bolt: L := **.75**·in

Threaded length: Lt := **.75**·in *(If bolt is fully threaded, input Lt = L)*

Bolt head dia. across flats: dw := **.365**·in *(dia of pressure boss if it exists, otherwise dia of head)*

Bolt head height: bh := **.244**·in *(head height is 0 if bolt is flat head)*

Bolt Data cont. (Bolt = **"NAS1351N4-12, .2500-28, 0.750 L, A-286, Heat Resistant Steel"**)

Fri Apr 27 14:15:35 2007

Thread data lookup table is hidden

This file uses the data shown in \\escfil02\2i11_mathcad\8307_bolts\Rev_D\thread_data.mcd

Temperature correction factor for bolt strength: $TSu_bolt := .96$ $TSy_bolt := .96$ *(MMPDS-03, Fig. 6.2.1.1.1.)*

Bolt ultimate tensile allowable stress: $Ftu_bolt := 160000 \cdot psi$ $Fty_bolt := 120000 \cdot psi$

Bolt ultimate shear allowable stress: $Fsu_bolt := 0.6 \cdot Ftu_bolt$

Temperature correction factor for bolt modulus: $TE_bolt := .98$ *(MMPDS-03, Fig. 6.2.1.1.4(a).)*

Modulus of elasticity of bolt: $E_bolt := \left(29.1 \cdot 10^{6} \cdot psi\right)$ *(MMPDS-03, Fig. 6.2.1.0(b).)*

Thermal coefficients for bolt

$\beta_bolt_hot := 9.1 \cdot 10^{-6} \cdot \frac{\frac{in}{in}}{deg}$ $\beta_bolt_cold := 8.5 \cdot 10^{-6} \cdot \frac{\frac{in}{in}}{deg}$ *(MMPDS-03, Fig. 6.2.1.0.)*

Washer Data (Washer = **"NAS1149E0463R, .250 Nom Dia, 0.063 T, A-286, Passivate"**)

Thickness of washers:

head $twh := .063 \cdot in$

nut $twn := .063 \cdot in$

(these are total washer thickness, if there are more than one)

Diameter of washer under head:

Outer $Dwoh := .500 in$

Inner $Dwih := .265 \cdot in$

Diameter of washer under nut:

Outer $Dwon := .500 in$

Inner $Dwin := .265 \cdot in$

Note: If there is no washer - tw's, Dwo's and Dwi's should be zero

Modulus of elasticity:

head $E_washerh := \left(29.1 \cdot 10^{6} \cdot psi\right)$

nut $E_washern := \left(29.1 \cdot 10^{6} \cdot psi\right)$

Temperature correction factor for modulus:

head $TE_washerh := .98$

nut $TE_washern := .98$

(same as bolt)

Nut Data (Nut = **"NAS1291-C4M, .2500-28 UNJF-3B"**)

Height of nut: $H := .204 \cdot in$

Nut dia. across flats: $Dn := .386 \cdot in$

Temperature correction factor for nut strength: $TS_nut := .96$ *(same as bolt)*

Ultimate allowable stress, tensile: $Ftu_nut := 125000 \cdot psi$ $Fsu_nut := 0.6 \cdot Ftu_nut$ *(Shear)*

Ultimate axial strength of nut: $Ptu_nut := 4530 \cdot lbf$

Prepared By	Name Kent Peters	Date 08/21/2008	Engineering and Science Contract Group *Structural Analysis Section*	File Name DS UPS 2.70in Bathtub to LTBB
Checked By	C. Bala			Draw ing No. SDG39137848-002
Title	Debris Shield Fastener Joint Analysis for Bolt/Washer with Nut/Washer UPS Side - 2.70in Bathtub Bracket to Lower Trunnion Bridge Beam			

Flange data (Stiffness of the joint depends upon number of members in the grip of the fasteners & their material properties)

Diameter of thru hole $D_hole := .272 \cdot in$

Flange_1 = **"2.70in Bathtub Bracket"**

Flange_2 = **"Lower Trunnion Bridge Beam"**

Material_1 = **"AL ALY 6061-T651"**

Material_2 = **"AL ALY 7050-T7451"**

Thickness of flanges $tf1 := .100 \cdot in$

$tf2 := .250 in$

Compressive Modulus of elastici $E_flange1 := (10.1 \cdot 10^6 \cdot psi)$

$E_flange2 := (10.6 \cdot 10^6 \cdot psi)$

Temperature correction factor (modul $Tf1E := .98$

$Tf2E := .98$

Coefficient of thermal expansion for flanges

$\beta_flange1_hot := 12.8 \cdot 10^{-6} \cdot \frac{\frac{in}{in}}{deg}$

$\beta_flange2_hot := 12.5 \cdot 10^{-6} \cdot \frac{\frac{in}{in}}{deg}$

$\beta_flange1_cold := 12.1 \cdot 10^{-6} \cdot \frac{\frac{in}{in}}{deg}$

$\beta_flange2_cold := 12.1 \cdot 10^{-6} \cdot \frac{\frac{in}{in}}{deg}$

Used Tf2E and alpha values for 7075 because no values were available for 7050

Torque/Preload data

Maximum torque $Tmax := 103.2 \cdot in \cdot lbf$

(Shigley's "Mechanical Engineering Design")

Minimum torque $Tmin := 87.7 in \cdot lbf$

Joint is lubed/dry

Preload Uncertainty $u := 0.25$ *(0.25 lubed/0.35 dry)*

Torque coefficient $k := 0.15$ *(0.15 lubed/0.20 dry)*

Loading plane factor $n := 0.5$

Stiffness and Margin calculations are
This file uses the calculations shown in \\escfil02\2i11_mathcad\8307_bolts\Rev_D\bolt_stiffness_nut.mcd

Fri Apr 27 14:15:49 2007

Bolt Load data

Bolt/joint stiffness factor = **0.348**

Max. preload PLDmax = **3524** lbf

Min. preload PLDmin = **1402** lbf

Nom. preload PLDnom = **2752** lbf

Preload to yield ratio (nom.) PLDratio = **0.677**

Joint separation load Psep = **241.200** lbf

Preload due to temperature Pthr_pos = **83.5** lbf

Pthr_neg = **−180** lbf

Uncertainty factor u = **0.250**

Torque coefficient k = **0.150**

Loading plane factor n = **0.500**

Bolt Load data (cont.)

Applied Tensile load on the bolt: P = **201.000** lbf

Applied shear on the bolt: V = **357.000** lbf

Applied bending on the bolt: M = **0.000** in·lbf

Max. load on the bolt with preload and Factor of safety

Pb = **3604** lbf *(ultimate)*

Pby = **3574** lbf *(yield)*

Max. load on the bolt with preload WithOut factor of safety

Pbapp = **3564** lbf

Bolt ultimate tensile strength: PAt = **5419** lbf

Thread pullout strength: PAs = **4349** lbf

Nut ultimate tensile strength: Ptu_nut = **4349** lbf

Bolt shear strength: VAu = **3001** lbf

Bolt bending strength: MAu = **150** in·lbf

General Checks

length_check = **"Bolt length should be increased! nut is fully threaded, but does not extend past nut"**

cone_check = **"Joint pressure cone does not extend pass flange edge"**

preload_check = **"Nominal preload >= 65% of bolt yield strength"**

washer_check = **"Washers under head and nut do not extend past flanges"**

Summary of Margins for bolt:

Joint separation	MS_1 = **5.12**	Direct Thread shear Ultimate	MS_6 = **8.41**
Direct Tension Ultimate	MS_2 = **10.72**	Total Thread shear Ultimate	MS_7 = **0.21**
Direct Tension Yield	MS_3 = **13.07**	Shear Ultimate	MS_8 = **2.65**
Total Tension Ultimate	MS_4 = **0.5**	Bending Ultimate	MS_9 = **100**
Total Tension Yield	MS_5 = **0.14**	Combined shear, tension and bending ultimate	MS_{10} = **0.46**

Smallest margin of safety for the bolt, and the failure mode:

MSbolt = **0.14**

Failure_Mode = **"Total Tension Yield"**

Prepared By	Name Kent Peters	Date 08/21/2008	Engineering and Science Contract Group *Structural Analysis Section*	File Name DS UPS 2.70in Bathtub to LTBB
Checked By	C. Bala			Drawing No. SDG39137848-002
Title	Debris Shield Fastener Joint Analysis for Bolt/Washer with Nut/Washer UPS Side - 2.70in Bathtub Bracket to Lower Trunnion Bridge Beam			

Fail-safe Analysis

Fail-safe Loads

Applied tensile load $P_FS := 240 \cdot lbf$

Applied shear load $V_FS := 666 \cdot lbf$

Applied bending moment $M_FS := 0 \cdot in \cdot lbf$

Fail-safe Factors of Safety

Ultimate $SFu_FS := 1.0$

Joint Separation $SFsep_FS := 1.0$

Fail Safe Margin calculations are hidden / stiffness & allowable data is not recalculated
This file uses the calculations shown in \\escfil02\2i11_mathcad\8307_bolts\Rev_D\bolt_stiffness_nut_FS.mcd

Fri Apr 27 14:16:05 2007

Bolt Fail-safe Load data

Joint separation load $Psep_FS = 240.000\ lbf$

Max. load on the bolt(ultimate) $Pb_FS = 3571.6\ lbf$

Summary of fail-safe Margins for bolt:

Joint separation $MS_FS_1 = 5.15$

Direct Tension Ultimate $MS_FS_2 = 18.64$

Total Tension Ultimate $MS_FS_3 = 0.52$

Direct Thread shear Ultimate $MS_FS_4 = 14.76$

Total Thread shear Ultimate $MS_FS_5 = 0.22$

Shear Ultimate $MS_FS_6 = 2.92$

Bending Ultimate $MS_FS_7 = 10$

Combined shear, tension and bending ultimate $MS_FS_8 = 0.48$

Determination of the smallest fail-safe margin of safety for the bolt, and the failure mode:

$MSbolt_FS = 0.22$ $Failure_Mode_FS =$ **"Total Thread Shear Ultimate (Nut)"**

Bolt Hole Analysis

Recall loads from bolt calculation

Safety Factors	SFu = **2.000**	*(Ultimate)*	SFy = **1.250**	*(Yield)*
	FF = **1.150**	*(Fitting Factor)*		
Input Loads	V = **357** lbf	*(Shear Load)*	P = **201.000** lbf	*(Axial Load)*
Bolt calc results	Pb = **3604** lbf	*(Max Bolt Load)*		
Dimensions	L = **0.750** in	*(Length of Bolt)*	twh = **0.063** in	*(Thickness of Washer)*

Shear Tear-Out Check

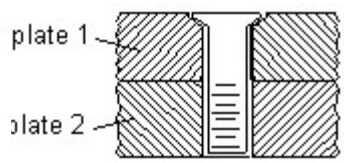

Recall bolt hole dimensions

$tf_1 := tf1$ $\quad tf_1 = \mathbf{0.100}\,in$ *(Entire Thickness of Flange 1)* $\quad Tf1E = \mathbf{0.980}$

$tf_2 := tf2$ $\quad tf_2 = \mathbf{0.250}\,in$ *(Entire Thickness of Flange 2)* $\quad Tf2E = \mathbf{0.980}$

$edge_1 := edge1$ $\quad edge_1 = \mathbf{0.347}\,in$ *(Edge Distance for Hole in Plate 1)*

$edge_2 := edge2$ $\quad edge_2 = \mathbf{0.375}\,in$ *(Edge Distance for Hole in Plate 2)*

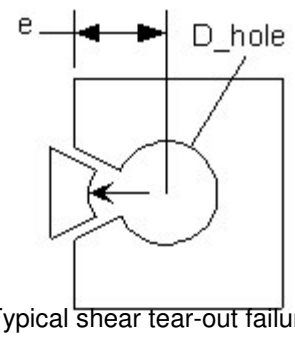

Typical shear tear-out failure

$D = \mathbf{0.250}\,in$ *(Diameter of Bolt)*

$D_shank = \mathbf{0.244}\,in$ *(Min. Shank Diameter of Bolt)*

$D_hole = \mathbf{0.272}\,in$ *(Diameter of Hole)*

Shear area of the mating components (Ref. Analysis & Design of Flight Vehicle Structures, Bruhn, Pg. D1.5)

$$A_{shrpl} := \overrightarrow{\left[2 \cdot tf \cdot \left(edge - \frac{1}{2} D_hole\right)\right]} \qquad \begin{pmatrix} Plate1 \\ Plate2 \end{pmatrix} \qquad A_{shrpl} = \begin{pmatrix} \mathbf{0.042} \\ \mathbf{0.119} \end{pmatrix} in^2$$

Allowables for plates that fastener goes through

$Fsu_1 := Tf1E \cdot \mathbf{27} \cdot ksi$ $\quad Fsu_1 = \mathbf{26.460}\,ksi$ *(Ultimate Shear Allowable for Plate 1)*

$Fsu_2 := Tf2E \cdot \mathbf{43} \cdot ksi$ $\quad Fsu_2 = \mathbf{42.140}\,ksi$ *(Ultimate Shear Allowable for Plate 2)*

$$P_{su} := \overrightarrow{\left(A_{shrpl} \cdot Fsu\right)} \qquad P_{su} = \begin{pmatrix} \mathbf{1117} \\ \mathbf{5036} \end{pmatrix} lbf$$ *(Shear Ultimate Allowable)*

MS for Shear Tear-Out

$$MS_{su} := \overrightarrow{\left(\frac{P_{su}}{V \cdot SFu \cdot FF} - 1\right)} \qquad \begin{pmatrix} Plate1 \\ Plate2 \end{pmatrix} \qquad MS_{su} = \begin{pmatrix} \mathbf{0.36} \\ \mathbf{5.13} \end{pmatrix}$$

$$MS_{bh_1} := \min\left(MS_{su}\right)$$

$MS_{bh_1} = \mathbf{0.36}$ ***... Shear Tear-Out MS***

Bearing Check

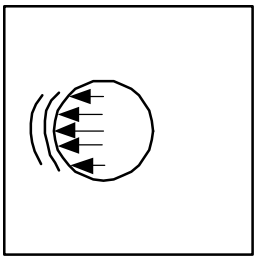

Typical Bearing Failure

Recall bolt hole dimensions

$tf_1 = 0.100\,in$ *(Thickness of Plate 1)*

$tf_2 = 0.250\,in$ *(Thickness of Plate 2)*

$edge_1 = 0.347\,in$ *(Edge Distance for thru Hole in Plate 1)*

$edge_2 = 0.375\,in$ *(Edge Distance for tapped Hole in Plate 2)*

$A_{br} := \overrightarrow{(tf \cdot \min(D, D_shank))}$ $\begin{pmatrix} \text{Plate1} \\ \text{Plate2} \end{pmatrix}$ $A_{br} = \begin{pmatrix} 0.024 \\ 0.061 \end{pmatrix} in^2$ *(Bearing Areas)*

$e_D := \dfrac{\overrightarrow{edge}}{D_hole}$ $e_D = \begin{pmatrix} 1.276 \\ 1.379 \end{pmatrix}$ *(e/D for Plates)*

Allowables for plates that fastener goes through

Bearing strength at e/D = 1.5

$Fbru15_1 := Tf1E \cdot 67 ksi$ $Fbru15_1 = 65.66\,ksi$

$Fbry15_1 := Tf1E \cdot 50 \cdot ksi$ $Fbry15_1 = 49\,ksi$

$Fbru15_2 := Tf2E \cdot 107 ksi$ $Fbru15_2 = 104.86\,ksi$

$Fbry15_2 := Tf2E \cdot 86 \cdot ksi$ $Fbry15_2 = 84.28\,ksi$

Bearing strength at e/D = 2.0

$Fbru20_1 := Tf1E \cdot 88 ksi$ $Fbru20_1 = 86.24\,ksi$

$Fbry20_1 := Tf1E \cdot 58 \cdot ksi$ $Fbry20_1 = 56.840\,ksi$

$Fbru20_2 := Tf2E \cdot 140 ksi$ $Fbru20_2 = 137.2\,ksi$

$Fbry20_2 := Tf2E \cdot 101 \cdot ksi$ $Fbry20_2 = 98.980\,ksi$

Modified bearing strength

$$Fbru_m_1 := if\left[e_D_1 > 2.0, Fbru20_1, if\left[(e_D_1 > 1.5)\cdot(e_D_1 < 2.0), Fbru15_1 + \frac{e_D_1 - 1.5}{2.0 - 1.5}\cdot(Fbru20_1 - Fbru15_1), \left[Fbru15_1\cdot(e_D_1 - 0.5)\right]\right]\right]$$

$$Fbru_m_2 := if\left[e_D_2 > 2.0, Fbru20_2, if\left[(e_D_2 > 1.5)\cdot(e_D_2 < 2.0), Fbru15_2 + \frac{e_D_2 - 1.5}{2.0 - 1.5}\cdot(Fbru20_2 - Fbru15_2), \left[Fbru15_2\cdot(e_D_2 - 0.5)\right]\right]\right]$$

$$Fbry_m_1 := if\left[e_D_1 > 2.0, Fbry20_1, if\left[(e_D_1 > 1.5)\cdot(e_D_1 < 2.0), Fbry15_1 + \frac{e_D_1 - 1.5}{2.0 - 1.5}\cdot(Fbry20_1 - Fbry15_1), \left[Fbry15_1\cdot(e_D_1 - 0.5)\right]\right]\right]$$

$$Fbry_m_2 := if\left[e_D_2 > 2.0, Fbry20_2, if\left[(e_D_2 > 1.5)\cdot(e_D_2 < 2.0), Fbry15_2 + \frac{e_D_2 - 1.5}{2.0 - 1.5}\cdot(Fbry20_2 - Fbry15_2), \left[Fbry15_2\cdot(e_D_2 - 0.5)\right]\right]\right]$$

$Fbru_m = \begin{pmatrix} 50.935 \\ 92.138 \end{pmatrix} \begin{pmatrix} \text{Plate1} \\ \text{Plate2} \end{pmatrix}$ *(Ultimate)*

$Fbry_m = \begin{pmatrix} 38.011 \\ 74.055 \end{pmatrix} \begin{pmatrix} \text{Plate1} \\ \text{Plate2} \end{pmatrix}$ *(Yield)*

$P_{bru} := \overrightarrow{(A_{br} \cdot Fbru_m)}$ $\quad P_{bru} = \begin{pmatrix} 1240 \\ 5609 \end{pmatrix} lbf$ *(Bearing Ultimate Allowable)*

$P_{bry} := \overrightarrow{(A_{br} \cdot Fbry_m)}$ $\quad P_{bry} = \begin{pmatrix} 926 \\ 4508 \end{pmatrix} lbf$ *(Bearing Yield Allowable)*

MS for Bearing Failure

$\mathbf{MS_{bru}} := \overrightarrow{\left(\frac{P_{bru}}{V \cdot SFu \cdot FF} - 1\right)}$ $\quad \mathbf{MS_{bru}} = \begin{pmatrix} 0.510 \\ 5.831 \end{pmatrix}$ $\begin{pmatrix} Plate1 \\ Plate2 \end{pmatrix}$

$MS_{bh_2} := \min(\mathbf{MS_{bru}})$

$MS_{bh_2} = 0.51$ ***... Bearing MS based on Ultimate Strength***

$MS_{bry} := \overrightarrow{\left(\frac{P_{bry}}{V \cdot SFy \cdot FF} - 1\right)}$ $\quad MS_{bry} = \begin{pmatrix} 0.8 \\ 7.78 \end{pmatrix}$ $\begin{pmatrix} Plate1 \\ Plate2 \end{pmatrix}$

$MS_{bh_3} := \min(MS_{bry})$

$MS_{bh_3} = 0.804$ ***... Bearing MS based on Yield Strength***

Prepared By	Name: Kent Peters	Date: 08/21/2008	Engineering and Science Contract Group *Structural Analysis Section*	File Name: DS UPS 2.38in Bathtub to Angle E IPA
Checked By	C. Bala			Drawing No.: SDG39137848-001
Title	Debris Shield Fastener Joint Analysis for Bolt/Washer with Nutplate/No Washer UPS Side - 2.38in Bathtub Bracket to Angle E Assy Interface Panel A			

CHECK

Note: Figure is for reference only.
Not to scale. Actual joint made differ.
Washer may be on nut side, head side, or both

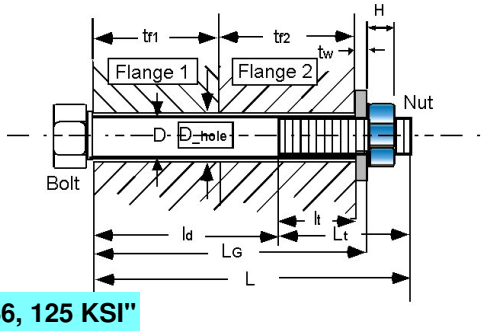

Bolt := **"NAS1351N3-10, .1900-32, 0.625 L, A-286, Heat Resistant Steel"**

Washer := **"NAS1149E0363R, No. 10, 0.063 T, A-286, 160 KSI, Passivate"**

Nut := **"MS21076L3N, .1900-32UNJF-3B, Dry Film Lube, w/o Eyelets, A-286, 125 KSI"**

Flange_1 := **"2.38" Bathtub Bracket"**
Part_Number_1 := **"SDG39137848-001"**
Material_1 := **"AL ALY 6061-T651"**

Minimum edge distance of flange one: edge1 := **.347**·in

Flange_2 := **"Interface Panel A Angle E Assy"**
Part_Number_2 := **"SEG39137686-705"**
Material_2 := **"AL ALY 7075-T7351"**

Minimum edge distance of flange two: edge2 := **.312**·in

Loads (reference)

Applied tensile load: P := **201**.lbf

Applied shear load: V := **357**.lbf

Applied bending moment: M := **0**in·lbf

(Worst case combination)

Factors of Safety (reference)

SFu := **2.00** *(Ultimate)*

SFy := **1.25** *(Yield)*

FF := **1.15** *(Fitting factor)*

SFsep := **1.20** *(Joint Separation)*

Temperature data (reference)

Assembly: Temp_initial := **70**·deg

Temp_max := **140**·deg *(Maximum)*

Temp_min := **–76**·deg *(Minimum)*

Note: these are maximum temperatures that hardware sees / if maximum load occurs at a different temperature this will be conservative

Bolt Data (Bolt = **"NAS1351N3-10, .1900-32, 0.625 L, A-286, Heat Resistant Steel"**)

Nominal diameter of bolt: D := **.1900**·in

Number of threads/inch: Nt := **32**·$\frac{1}{in}$

Shank diameter of bolt: D_shank := **.1840**·in

Note: if there is a retainer groove in the fastener, this should be the calculated diameter to give an equivalent cross sectional area

Total length of bolt: L := **.625**·in

Threaded length: Lt := **.625**·in *(If bolt is fully threaded, input Lt = L)*

Bolt head dia. across flats: dw := **.303**·in *(dia of pressure boss if it exists, otherwise dia of head)*

Bolt head height: bh := **.185**·in *(head height is 0 if bolt is flat head)*

Bolt Data cont. (Bolt = **"NAS1351N3-10, .1900-32, 0.625 L, A-286, Heat Resistant Steel"**)

Fri Apr 27 14:15:35 2007

Thread data lookup table is hidden

This file uses the data shown in \\escfil02\2i11_mathcad\8307_bolts\Rev_D\thread_data.mcd

Temperature correction factor for bolt strength: $TSu_bolt := \mathbf{.96}$ $TSy_bolt := \mathbf{.96}$ *(MMPDS-03, Fig. 6.2.1.1.1.)*

Bolt ultimate tensile allowable stress: $Ftu_bolt := \mathbf{160000} \cdot psi$ $Fty_bolt := \mathbf{120000} \cdot psi$

Bolt ultimate shear allowable stress: $Fsu_bolt := \mathbf{0.6} \cdot Ftu_bolt$

Temperature correction factor for bolt modulus: $TE_bolt := \mathbf{.98}$ *(MMPDS-03, Fig. 6.2.1.1.4(a).)*

Modulus of elasticity of bolt: $E_bolt := \left(\mathbf{29.1} \cdot \mathbf{10}^{6} \cdot psi\right)$ *(MMPDS-03, Fig. 6.2.1.0(b).)*

Thermal coefficients for bolt

$\beta_bolt_hot := \mathbf{9.1} \cdot \mathbf{10}^{-6} \cdot \frac{\frac{in}{in}}{deg}$ $\beta_bolt_cold := \mathbf{8.5} \cdot \mathbf{10}^{-6} \cdot \frac{\frac{in}{in}}{deg}$ *(MMPDS-03, Fig. 6.2.1.0.)*

Washer Data (Washer = **"NAS1149E0363R, No. 10, 0.063 T, A-286, 160 KSI, Passivate"**)

Thickness of washers:

head $twh := \mathbf{.063} \cdot in$

nut $twn := \mathbf{0.0} \cdot in$

(these are total washer thickness, if there are more than one)

Diameter of washer under head:

Outer $Dwoh := \mathbf{.438} in$

Inner $Dwih := \mathbf{.203} \cdot in$

Diameter of washer under nut:

Outer $Dwon := \mathbf{0.0} in$

Inner $Dwin := \mathbf{0.0} \cdot in$

Note: If there is no washer - tw's, Dwo's and Dwi's should be zero

Modulus of elasticity:

head $E_washerh := \left(\mathbf{29.1} \cdot \mathbf{10}^{6} \cdot psi\right)$

nut $E_washern := \left(\mathbf{0.0} \cdot \mathbf{10}^{6} \cdot psi\right)$

Temperature correction factor for modulus:

head $TE_washerh := \mathbf{.98}$

nut $TE_washern := \mathbf{0.0}$

(same as bolt)

Nut Data (Nut = **"MS21076L3N, .1900-32UNJF-3B, Dry Film Lube, w/o Eyelets, A-286, 125 KSI"**)

Height of nut: $H := \mathbf{.250} \cdot in$

Nut dia. across flats: $Dn := \mathbf{.290} \cdot in$

Temperature correction factor for nut strength: $TS_nut := \mathbf{.96}$ *(same as bolt)*

Ultimate allowable stress, tensile: $Ftu_nut := \mathbf{125000} \cdot psi$ $Fsu_nut := \mathbf{0.6} \cdot Ftu_nut$ *(Shear)*

Ultimate axial strength of nut: $Ptu_nut := \mathbf{2460} \cdot lbf$

Prepared By	Name Kent Peters	Date 08/21/2008	Engineering and Science Contract Group *Structural Analysis Section*	File Name DS UPS 2.38in Bathtub to Angle E IPA
Checked By	C. Bala			Drawing No. SDG39137848-001
Title	Debris Shield Fastener Joint Analysis for Bolt/Washer with Nutplate/No Washer UPS Side - 2.38in Bathtub Bracket to Angle E Assy Interface Panel A			

Flange data (Stiffness of the joint depends upon number of members in the grip of the fasteners & their material properties)

Diameter of thru hole $D_hole := .226 \cdot in$

Flange_1 = **"2.38" Bathtub Bracket"**

Flange_2 = **"Interface Panel A Angle E Assy"**

Material_1 = **"AL ALY 6061-T651"**

Material_2 = **"AL ALY 7075-T7351"**

Thickness of flanges $tf1 := .100 \cdot in$ $tf2 := .120 in$

Compressive Modulus of elastici $E_flange1 := \left(10.1 \cdot 10^{6} \cdot psi\right)$ $E_flange2 := \left(10.6 \cdot 10^{6} \cdot psi\right)$

Temperature correction factor (modul $Tf1E := .98$ $Tf2E := .98$

Coefficient of thermal expansion for flanges

$\beta_flange1_hot := 12.8 \cdot 10^{-6} \cdot \frac{\frac{in}{in}}{deg}$ $\beta_flange2_hot := 12.5 \cdot 10^{-6} \cdot \frac{\frac{in}{in}}{deg}$

$\beta_flange1_cold := 12.1 \cdot 10^{-6} \cdot \frac{\frac{in}{in}}{deg}$ $\beta_flange2_cold := 12.1 \cdot 10^{-6} \cdot \frac{\frac{in}{in}}{deg}$

Torque/Preload data

Maximum torque $Tmax := 42.8 \cdot in \cdot lbf$

Minimum torque $Tmin := 36.4 in \cdot lbf$

Joint is lubed/dry

Preload Uncertainty $u := 0.25$ *(0.25 lubed/0.35 dry)*

Torque coefficient $k := 0.15$ *(0.15 lubed/0.20 dry)*

Loading plane factor $n := 0.5$

Stiffness and Margin calculations are hidden

This file uses the calculations shown in \\escfil02\2i11_mathcad\8307_bolts\Rev_D\bolt_stiffness_nut.mcd

Fri Apr 27 14:15:49 2007

Prepared By	Name	Date	Engineering and Science Contract Group	File Name
	Kent Peters	08/21/2008		DS UPS 2.38in Bathtub to Angle E IPA
Checked By	C. Bala		*Structural Analysis Section*	Drawing No. SDG39137848-001

Title: Debris Shield Fastener Joint Analysis for Bolt/Washer with Nutplate/No Washer
UPS Side - 2.38in Bathtub Bracket to Angle E Assy Interface Panel A

Bolt Load data

Bolt/joint stiffness factor	= **0.322**	Preload due to temperature	Pthr_pos = **42.7** lbf
Max. preload	PLDmax = **1920** lbf		Pthr_neg = **–90.6** lbf
Min. preload	PLDmin = **773** lbf		
Nom. preload	PLDnom = **1502** lbf	Uncertainty factor	u = **0.250**
Preload to yield ratio (nom.)	PLDratio = **0.677**	Torque coefficient	k = **0.150**
Joint separation load	Psep = **241.200** lbf	Loading plane factor	n = **0.500**

Applied Tensile load on the bolt	P = **201.000** lbf	Max. load on the bolt with preload and Factor of safety	
Applied shear on the bolt	V = **357.000** lbf	Pb = **1994** lbf	*(ultimate)*
Applied bending on the bolt	M = **0.000** in·lbf	Pby = **1966** lbf	*(yield)*
		Max. load on the bolt with preload WithOut factor of safety	
		Pbapp = **1957** lbf	

Bolt ultimate tensile strength	PAt = **2957** lbf	Bolt shear strength	VAu = **1616** lbf
Thread pullout strength	PAs = **2362** lbf	Bolt bending strength	MAu = **61** in·lbf
Nut ultimate tensile strength	Ptu_nut = **2362** lbf		

General Checks

length_check = **"Bolt length is sufficient and nut fully engaged"**

cone_check = **"Joint pressure cone does not extend pass flange edge"**

preload_check = **"Nominal preload >= 65% of bolt yield strength"**

washer_check = **"Washers under head and nut do not extend past flanges"**

Summary of Margins for bolt:

Joint separation	MS_1 = **2.32**	Direct Thread shear Ultimate	MS_6 = **4.11**
Direct Tension Ultimate	MS_2 = **5.4**	Total Thread shear Ultimate	MS_7 = **0.18**
Direct Tension Yield	MS_3 = **6.67**	Shear Ultimate	MS_8 = **0.97**
Total Tension Ultimate	MS_4 = **0.48**	Bending Ultimate	MS_9 = **100**
Total Tension Yield	MS_5 = **0.13**	Combined shear, tension and bending ultimate	MS_{10} = **0.27**

Smallest margin of safety for the bolt, and the failure mode:

MSbolt = **0.13** Failure_Mode = **"Total Tension Yield"**

Prepared By	Name Kent Peters	Date 08/21/2008	Engineering and Science Contract Group *Structural Analysis Section*	File Name DS UPS 2.38in Bathtub to Angle E IPA
Checked By	C. Bala			Draw ing No. SDG39137848-001
Title	Debris Shield Fastener Joint Analysis for Bolt/Washer with Nutplate/No Washer UPS Side - 2.38in Bathtub Bracket to Angle E Assy Interface Panel A			

Fail-safe Analysis

Fail-safe Loads

Applied tensile load $P_FS := 240 \cdot lbf$

Applied shear load $V_FS := 666 \cdot lbf$

Applied bending moment $M_FS := 0 \cdot in \cdot lbf$

Fail-safe Factors of Safety

Ultimate $SFu_FS := 1.0$

Joint Separation $SFsep_FS := 1.0$

Fail Safe Margin calculations are hidden / stiffness & allowable data is not recalculated

This file uses the calculations shown in \\escfil02\2i11_mathcad\8307_bolts\Rev_D\bolt_stiffness_nut_FS.mcd

Fri Apr 27 14:16:05 2007

Bolt Fail-safe Load data

Joint separation load $Psep_FS = 240.000\ lbf$

Max. load on the bolt(ultimate) $Pb_FS = 1964.3\ lbf$

Summary of fail-safe Margins for bolt:

Joint separation	$MS_FS_1 = 2.34$	Total Thread shear Ultimate	$MS_FS_5 = 0.2$
Direct Tension Ultimate	$MS_FS_2 = 9.71$	Shear Ultimate	$MS_FS_6 = 1.11$
Total Tension Ultimate	$MS_FS_3 = 0.51$	Bending Ultimate	$MS_FS_7 = 10$
Direct Thread shear Ultimate	$MS_FS_4 = 7.56$	Combined shear, tension and bending ultimate	$MS_FS_8 = 0.31$

Determination of the smallest fail-safe margin of safety for the bolt, and the failure mode:

$MSbolt_FS = 0.2$

$Failure_Mode_FS =$ **"Total Thread Shear Ultimate (Nut)"**

Prepared By	Name Kent Peters	Date 08/21/2008	Engineering and Science Contract Group *Structural Analysis Section*	File Name DS UPS 2.38in Bathtub to Angle E IPA
Checked By	C. Bala			Drawing No. SDG39137848-001
Title	Debris Shield Fastener Joint Analysis for Bolt/Washer with Nutplate/No Washer UPS Side - 2.38in Bathtub Bracket to Angle E Assy Interface Panel A			

Bolt Hole Analysis

Recall loads from bolt calculation

Safety Factors	SFu = **2.000**	*(Ultimate)*	SFy = **1.250**	*(Yield)*
	FF = **1.150**	*(Fitting Factor)*		
Input Loads	V = **357** lbf	*(Shear Load)*	P = **201.000** lbf	*(Axial Load)*
Bolt calc results	Pb = **1994** lbf	*(Max Bolt Load)*		
Dimensions	L = **0.625** in	*(Length of Bolt)*	twh = **0.063** in	*(Thickness of Washer)*

Shear Tear-Out Check

Recall bolt hole dimensions

$tf_1 := tf1$ $\quad tf_1 = \mathbf{0.100}\,in$ *(Entire Thickness of Flange 1)* $\quad Tf1E = \mathbf{0.980}$

$tf_2 := tf2$ $\quad tf_2 = \mathbf{0.120}\,in$ *(Entire Thickness of Flange 2)* $\quad Tf2E = \mathbf{0.980}$

$edge_1 := edge1$ $\quad edge_1 = \mathbf{0.347}\,in$ *(Edge Distance for Hole in Plate 1)*

$edge_2 := edge2$ $\quad edge_2 = \mathbf{0.312}\,in$ *(Edge Distance for Hole in Plate 2)*

$D = \mathbf{0.190}\,in$ *(Diameter of Bolt)*

$D_shank = \mathbf{0.184}\,in$ *(Min. Shank Diameter of Bolt)*

$D_hole = \mathbf{0.226}\,in$ *(Diameter of Hole)*

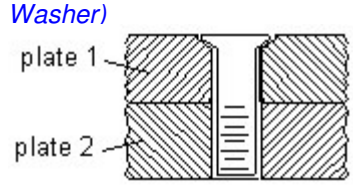

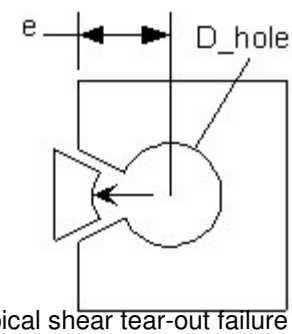

Typical shear tear-out failure

Shear area of the mating components (Ref. Analysis & Design of Flight Vehicle Structures, Bruhn, Pg. D1.5)

$$A_{shrpl} := \overrightarrow{\left[2 \cdot tf \cdot \left(edge - \frac{1}{2} D_hole\right)\right]} \qquad \begin{pmatrix} Plate1 \\ Plate2 \end{pmatrix} \qquad A_{shrpl} = \begin{pmatrix} \mathbf{0.047} \\ \mathbf{0.048} \end{pmatrix} in^2$$

Allowables for plates that fastener goes through

$Fsu_1 := Tf1E \cdot \mathbf{27} \cdot ksi$ $\quad Fsu_1 = \mathbf{26.460}\,ksi$ *(Ultimate Shear Allowable for Plate 1)*

$Fsu_2 := Tf2E \cdot \mathbf{38} \cdot ksi$ $\quad Fsu_2 = \mathbf{37.240}\,ksi$ *(Ultimate Shear Allowable for Plate 2)*

$$P_{su} := \overrightarrow{\left(A_{shrpl} \cdot Fsu\right)} \qquad P_{su} = \begin{pmatrix} \mathbf{1238} \\ \mathbf{1779} \end{pmatrix} lbf$$ *(Shear Ultimate Allowable)*

MS for Shear Tear-Out

$$MS_{su} := \overrightarrow{\left(\frac{P_{su}}{V \cdot SFu \cdot FF} - \mathbf{1}\right)} \qquad \begin{pmatrix} Plate1 \\ Plate2 \end{pmatrix} \qquad MS_{su} = \begin{pmatrix} \mathbf{0.51} \\ \mathbf{1.17} \end{pmatrix}$$

$MS_{bh_1} := \min(MS_{su})$

$MS_{bh_1} = \mathbf{0.508}$ ***... Shear Tear-Out MS***

Bearing Check

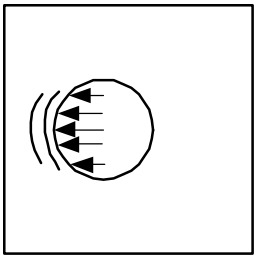

Typical Bearing Failure

Recall bolt hole dimensions

$tf_1 = \mathbf{0.100}\,in$ *(Thickness of Plate 1)*

$tf_2 = \mathbf{0.120}\,in$ *(Thickness of Plate 2)*

$edge_1 = \mathbf{0.347}\,in$ *(Edge Distance for thru Hole in Plate 1)*

$edge_2 = \mathbf{0.312}\,in$ *(Edge Distance for tapped Hole in Plate 2)*

$A_{br} := \overrightarrow{(tf \cdot \min(D, D_shank))}$ $\begin{pmatrix} Plate1 \\ Plate2 \end{pmatrix}$ $A_{br} = \begin{pmatrix} \mathbf{0.018} \\ \mathbf{0.022} \end{pmatrix} in^2$ *(Bearing Areas)*

$e_D := \frac{\overrightarrow{edge}}{D_hole}$ $e_D = \begin{pmatrix} \mathbf{1.535} \\ \mathbf{1.381} \end{pmatrix}$ *(e/D for Plates)*

Allowables for plates that fastener goes through

Bearing strength at e/D = 1.5

$Fbru15_1 := Tf1E \cdot \mathbf{67}ksi$ $Fbru15_1 = \mathbf{65.66}\,ksi$

$Fbry15_1 := Tf1E \cdot \mathbf{50} \cdot ksi$ $Fbry15_1 = \mathbf{49}\,ksi$

$Fbru15_2 := Tf2E \cdot \mathbf{107}ksi$ $Fbru15_2 = \mathbf{104.86}\,ksi$

$Fbry15_2 := Tf2E \cdot \mathbf{86} \cdot ksi$ $Fbry15_2 = \mathbf{84.28}\,ksi$

Bearing strength at e/D = 2.0

$Fbru20_1 := Tf1E \cdot \mathbf{88}ksi$ $Fbru20_1 = \mathbf{86.24}\,ksi$

$Fbry20_1 := Tf1E \cdot \mathbf{58} \cdot ksi$ $Fbry20_1 = \mathbf{56.840}\,ksi$

$Fbru20_2 := Tf2E \cdot \mathbf{140}ksi$ $Fbru20_2 = \mathbf{137.2}\,ksi$

$Fbry20_2 := Tf2E \cdot \mathbf{101} \cdot ksi$ $Fbry20_2 = \mathbf{98.980}\,ksi$

Modified bearing strength

$$Fbru_m_1 := if\left[e_D_1 > \mathbf{2.0}, Fbru20_1, if\left[(e_D_1 > \mathbf{1.5}) \cdot (e_D_1 < \mathbf{2.0}), Fbru15_1 + \frac{e_D_1 - \mathbf{1.5}}{\mathbf{2.0} - \mathbf{1.5}} \cdot (Fbru20_1 - Fbru15_1), \left[Fbru15_1 \cdot (e_D_1 - \mathbf{0.5})\right]\right]\right]$$

$$Fbru_m_2 := if\left[e_D_2 > \mathbf{2.0}, Fbru20_2, if\left[(e_D_2 > \mathbf{1.5}) \cdot (e_D_2 < \mathbf{2.0}), Fbru15_2 + \frac{e_D_2 - \mathbf{1.5}}{\mathbf{2.0} - \mathbf{1.5}} \cdot (Fbru20_2 - Fbru15_2), \left[Fbru15_2 \cdot (e_D_2 - \mathbf{0.5})\right]\right]\right]$$

$$Fbry_m_1 := if\left[e_D_1 > \mathbf{2.0}, Fbry20_1, if\left[(e_D_1 > \mathbf{1.5}) \cdot (e_D_1 < \mathbf{2.0}), Fbry15_1 + \frac{e_D_1 - \mathbf{1.5}}{\mathbf{2.0} - \mathbf{1.5}} \cdot (Fbry20_1 - Fbry15_1), \left[Fbry15_1 \cdot (e_D_1 - \mathbf{0.5})\right]\right]\right]$$

$$Fbry_m_2 := if\left[e_D_2 > \mathbf{2.0}, Fbry20_2, if\left[(e_D_2 > \mathbf{1.5}) \cdot (e_D_2 < \mathbf{2.0}), Fbry15_2 + \frac{e_D_2 - \mathbf{1.5}}{\mathbf{2.0} - \mathbf{1.5}} \cdot (Fbry20_2 - Fbry15_2), \left[Fbry15_2 \cdot (e_D_2 - \mathbf{0.5})\right]\right]\right]$$

$$Fbru_m = \begin{pmatrix} \mathbf{67.117} \\ \mathbf{92.332} \end{pmatrix} \begin{pmatrix} \text{Plate1} \\ \text{Plate2} \end{pmatrix}$$ *(Ultimate)*

$$Fbry_m = \begin{pmatrix} \mathbf{49.555} \\ \mathbf{74.211} \end{pmatrix} \begin{pmatrix} \text{Plate1} \\ \text{Plate2} \end{pmatrix}$$ *(Yield)*

$$P_{bru} := \overrightarrow{\left(A_{br} \cdot Fbru_m\right)}$$

$$P_{bry} := \overrightarrow{\left(A_{br} \cdot Fbry_m\right)}$$

$$P_{bru} = \begin{pmatrix} \mathbf{1235} \\ \mathbf{2039} \end{pmatrix} \text{lbf}$$ *(Bearing Ultimate Allowable)*

$$P_{bry} = \begin{pmatrix} \mathbf{912} \\ \mathbf{1639} \end{pmatrix} \text{lbf}$$ *(Bearing Yield Allowable)*

MS for Bearing Failure

$$\mathbf{MS_{bru}} := \overrightarrow{\left(\frac{P_{bru}}{V \cdot SFu \cdot FF} - \mathbf{1}\right)}$$

$$\mathbf{MS_{bru}} = \begin{pmatrix} \mathbf{0.504} \\ \mathbf{1.483} \end{pmatrix} \quad \begin{pmatrix} \text{Plate1} \\ \text{Plate2} \end{pmatrix}$$

$$MS_{bh_2} := \min\left(\mathbf{MS_{bru}}\right)$$

$$MS_{bh_2} = \mathbf{0.504}$$ ***... Bearing MS based on Ultimate Strength***

$$MS_{bry} := \overrightarrow{\left(\frac{P_{bry}}{V \cdot SFy \cdot FF} - \mathbf{1}\right)}$$

$$MS_{bry} = \begin{pmatrix} \mathbf{0.78} \\ \mathbf{2.19} \end{pmatrix} \quad \begin{pmatrix} \text{Plate1} \\ \text{Plate2} \end{pmatrix}$$

$$MS_{bh_3} := \min\left(MS_{bry}\right)$$

$$MS_{bh_3} = \mathbf{0.777}$$ ***... Bearing MS based on Yield Strength***

Prepared By	Name Kent Peters	Date 08/21/2008	Engineering and Science Contract Group *Structural Analysis Section*	File Name DS UPS Tab Angle to Bumper
Checked By	C. Bala			Drawing No. SDG39137848
Title	Debris Shield Fastener Joint Analysis for Bolt/Washer with Nutplate/No Washer UPS Side - Tab Angle to Outer Bumper			

CHECK

Note: Figure is for reference only.
Not to scale. Actual joint made differ.
Washer may be on nut side, head side, or both

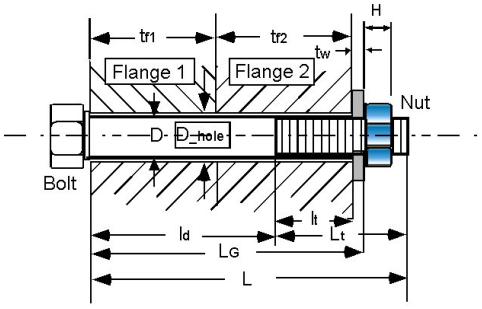

Bolt := **"NAS1133E4, .1900-32, 0.526 L, A-286"**

Washer := **"NAS1149E0332R"**

Nut := **"MS21076L3N"**

Flange_1 := **"Outer Bumper"**
Part_Number_1 := **"SDG39137854"**
Material_1 := **"AL ALY 2219-T87"**

Minimum edge distance of flange one: edge1 := **.75**·in

Flange_2 := **"Tab Angle Bracket"**
Part_Number_2 := **"SDG39137847"**
Material_2 := **"AL ALY 7075-T7351"**

Minimum edge distance of flange two: edge2 := **.312**·in

Loads (reference)

Applied tensile load: P := **49.8**lbf

Applied shear load: V := **489.**lbf

Applied bending moment: M := **0**in·lbf

(Worst case combination)

Factors of Safety (reference)

SFu := **2.00** *(Ultimate)*

SFy := **1.25** *(Yield)*

FF := **1.15** *(Fitting factor)*

SFsep := **1.20** *(Joint Separation)*

Temperature data (reference)

Assembly Temp_initial := **70**·deg

Temp_max := **140**·deg *(Maximum)*

Temp_min := **–76**·deg *(Minimum)*

Note: these are maximum temperatures that hardware sees / if maximum load occurs at a different temperature this will be conservative

Bolt Data (Bolt = **"NAS1133E4, .1900-32, 0.526 L, A-286"**)

Nominal diameter of bolt: D := **.19**·in

Number of threads/inch: Nt := **32**·$\frac{1}{in}$

Shank diameter of bolt: D_shank := **.1885**·in

Note: if there is a retainer groove in the fastener, this should be the calculated diameter to give an equivalent cross sectional area

Total length of bolt: L := **.526**·in

Threaded length: Lt := **.276**·in *(If bolt is fully threaded, input Lt = L)*

Bolt head dia. across flats: dw := **.357**·in *(dia of pressure boss if it exists, otherwise dia of head)*

Bolt head height: bh := **.122**·in *(head height is 0 if bolt is flat head)*

Bolt Data cont. (Bolt = **"NAS1133E4, .1900-32, 0.526 L, A-286"**)

Fri Apr 27 14:15:35 2007

Thread data lookup table is hidden

This file uses the data shown in \\escfil02\2i11_mathcad\8307_bolts\Rev_D\thread_data.mcd

Temperature correction factor for bolt strength: $TSu_bolt := \mathbf{.96}$ $TSy_bolt := \mathbf{.96}$ *(MMPDS-03, Fig. 6.2.1.1.1.)*

Bolt ultimate tensile allowable stress: $Ftu_bolt := \mathbf{160000} \cdot psi$ $Fty_bolt := \mathbf{120000} \cdot psi$

Bolt ultimate shear allowable stress: $Fsu_bolt := \mathbf{0.6} \cdot Ftu_bolt$

Temperature correction factor for bolt modulus: $TE_bolt := \mathbf{.98}$ *(MMPDS-03, Fig. 6.2.1.1.4(a).)*

Modulus of elasticity of bolt: $E_bolt := \left(\mathbf{29.1} \cdot \mathbf{10}^{6} \cdot psi\right)$ *(MMPDS-03, Fig. 6.2.1.0(b).)*

Thermal coefficients for bolt

$\beta_bolt_hot := \mathbf{9.1} \cdot \mathbf{10}^{-6} \cdot \frac{\frac{in}{in}}{deg}$ $\beta_bolt_cold := \mathbf{8.5} \cdot \mathbf{10}^{-6} \cdot \frac{\frac{in}{in}}{deg}$ *(MMPDS-03, Fig. 6.2.1.0.)*

Washer Data (Washer = **"NAS1149E0332R"**)

Thickness of washers:

head $twh := \mathbf{.032} \cdot in$

nut $twn := \mathbf{0.0} \cdot in$

(these are total washer thickness, if there are more than one)

Diameter of washer under head:

Outer $Dwoh := \mathbf{.438} in$

Inner $Dwih := \mathbf{.203} \cdot in$

Diameter of washer under nut:

Outer $Dwon := \mathbf{0.0} in$

Inner $Dwin := \mathbf{0.0} \cdot in$

Note: If there is no washer - tw's, Dwo's and Dwi's should be zero

Modulus of elasticity:

head $E_washerh := \left(\mathbf{29.1} \cdot \mathbf{10}^{6} \cdot psi\right)$

nut $E_washern := \left(\mathbf{0.0} \cdot \mathbf{10}^{6} \cdot psi\right)$

Temperature correction factor for modulus:

head $TE_washerh := \mathbf{.98}$

nut $TE_washern := \mathbf{0.0}$

(same as bolt)

Nut Data (Nut = **"MS21076L3N"**)

Height of nut $H := \mathbf{.250} \cdot in$

Nut dia. across flats $Dn := \mathbf{.290} \cdot in$

Temperature correction factor for nut strength $TS_nut := \mathbf{.96}$ *(same as bolt)*

Ultimate allowable stress, tensile $Ftu_nut := \mathbf{125000} \cdot psi$ $Fsu_nut := \mathbf{0.6} \cdot Ftu_nut$ *(Shear)*

Ultimate axial strength of nut $Ptu_nut := \mathbf{2460} \cdot lbf$

Prepared By	Name	Date	Engineering and Science Contract Group	File Name
	Kent Peters	08/21/2008		DS UPS Tab Angle to Bumper
Checked By	C. Bala		*Structural Analysis Section*	Drawing No. SDG39137848
Title	Debris Shield Fastener Joint Analysis for Bolt/Washer with Nutplate/No Washer UPS Side - Tab Angle to Outer Bumper			

Flange data (Stiffness of the joint depends upon number of members in the grip of the fasteners & their material properties)

Diameter of thru hole $D_hole := .213 \cdot in$

Flange_1 = **"Outer Bumper"**

Flange_2 = **"Tab Angle Bracket"**

Material_1 = **"AL ALY 2219-T87"**

Material_2 = **"AL ALY 7075-T7351"**

Thickness of flanges $tf1 := .100 \cdot in$ $tf2 := .125 in$

Compressive Modulus of elasticity $E_flange1 := (10.8 \cdot 10^6 \cdot psi)$ $E_flange2 := (10.6 \cdot 10^6 \cdot psi)$

Temperature correction factor (modulus)

$Tf1E := .96$ $Tf2E := .98$

Coefficient of thermal expansion for flanges

$\beta_flange1_hot := 12.4 \cdot 10^{-6} \cdot \frac{\frac{in}{in}}{deg}$ $\beta_flange2_hot := 12.5 \cdot 10^{-6} \cdot \frac{\frac{in}{in}}{deg}$

$\beta_flange1_cold := 11.6 \cdot 10^{-6} \cdot \frac{\frac{in}{in}}{deg}$ $\beta_flange2_cold := 12.1 \cdot 10^{-6} \cdot \frac{\frac{in}{in}}{deg}$

Torque/Preload data

Maximum torque $Tmax := 44.4 \cdot in \cdot lbf$

Minimum torque $Tmin := 37.8 in \cdot lbf$

Joint is lubed/dry

Preload Uncertainty $u := 0.25$ *(0.25 lubed/0.35 dry)*

Torque coefficient $k := 0.15$ *(0.15 lubed/0.20 dry)*

Loading plane factor $n := 0.5$

Stiffness and Margin calculations are hidden

This file uses the calculations shown in \\escfil02\2i11_mathcad\8307_bolts\Rev_D\bolt_stiffness_nut.mcd

Fri Apr 27 14:15:49 2007

Bolt Load data

Bolt/joint stiffness factor	= **0.331**	Preload due to temperature	Pthr_pos = **56** lbf
Max. preload	PLDmax = **2003** lbf		Pthr_neg = **−117.6** lbf
Min. preload	PLDmin = **780** lbf		
Nom. preload	PLDnom = **1558** lbf	Uncertainty factor	u = **0.250**
Preload to yield ratio (nom.)	PLDratio = **0.703**	Torque coefficient	k = **0.150**
Joint separation load	Psep = **59.760** lbf	Loading plane factor	n = **0.500**

Bolt Load data (cont.)

Applied Tensile load on the bolt — P = **49.800** lbf

Applied shear on the bolt — V = **489.000** lbf

Applied bending on the bolt — M = **0.000** in·lbf

Max. load on the bolt with preload and Factor of safety

Pb = **2022** lbf *(ultimate)*

Pby = **2015** lbf *(yield)*

Max. load on the bolt with preload WithOut factor of safety

Pbapp = **2013** lbf

Bolt ultimate tensile strength — PAt = **2957** lbf

Thread pullout strength — PAs = **2362** lbf

Nut ultimate tensile strength — Ptu_nut = **2362** lbf

Bolt shear strength — VAu = **2572** lbf

Bolt bending strength — MAu = **61** in·lbf

General Checks

length_check = **"Bolt length should be increased! nut is fully threaded, but does not extend past nut"**

cone_check = **"Joint pressure cone does not extend pass flange edge"**

preload_check = **"Nominal preload >= 65% of bolt yield strength"**

washer_check = **"Washers under head and nut do not extend past flanges"**

Summary of Margins for bolt:

Joint separation	MS_1 = **12.59**	Direct Thread shear Ultimate	MS_6 = **19.62**
Direct Tension Ultimate	MS_2 = **24.81**	Total Thread shear Ultimate	MS_7 = **0.17**
Direct Tension Yield	MS_3 = **29.98**	Shear Ultimate	MS_8 = **1.29**
Total Tension Ultimate	MS_4 = **0.46**	Bending Ultimate	MS_9 = **100**
Total Tension Yield	MS_5 = **0.1**	Combined shear, tension and bending ultimate	MS_{10} = **0.32**

Smallest margin of safety for the bolt, and the failure mode:

MSbolt = **0.1**

Failure_Mode = **"Total Tension Yield"**

Prepared By	Name	Date	Engineering and Science Contract Group	File Name
	Kent Peters	08/21/2008		DS UPS Tab Angle to Bumper
Checked By	C. Bala		*Structural Analysis Section*	Draw ing No. SDG39137848
Title	Debris Shield Fastener Joint Analysis for Bolt/Washer with Nutplate/No Washer UPS Side - Tab Angle to Outer Bumper			

Fail-safe Analysis

Fail-safe Loads

Applied tensile load $P_FS := 105.6 \cdot lbf$

Applied shear load $V_FS := 950.4 \cdot lbf$

Applied bending moment $M_FS := 0 \cdot in \cdot lbf$

Fail-safe Factors of Safety

Ultimate $SFu_FS := 1.0$

Joint Separation $SFsep_FS := 1.0$

Fail Safe Margin calculations are hidden / stiffness & allowable data is not recalculated
This file uses the calculations shown in \\escfil02\2i11_mathcad\8307_bolts\Rev_D\bolt_stiffness_nut_FS.mcd

Fri Apr 27 14:16:05 2007

Bolt Fail-safe Load data

Joint separation load $Psep_FS = 105.600\ lbf$

Max. load on the bolt(ultimate) $Pb_FS = 2023.5\ lbf$

Summary of fail-safe Margins for bolt:

Joint separation $MS_FS_1 = 6.69$

Direct Tension Ultimate $MS_FS_2 = 23.35$

Total Tension Ultimate $MS_FS_3 = 0.46$

Direct Thread shear Ultimate $MS_FS_4 = 18.45$

Total Thread shear Ultimate $MS_FS_5 = 0.17$

Shear Ultimate $MS_FS_6 = 1.35$

Bending Ultimate $MS_FS_7 = 10$

Combined shear, tension and bending ultimate $MS_FS_8 = 0.32$

Determination of the smallest fail-safe margin of safety for the bolt, and the failure mode:

$MSbolt_FS = 0.17$ $Failure_Mode_FS =$ **"Total Thread Shear Ultimate (Nut)"**

Bolt Hole Analysis

Recall loads from bolt calculation

Safety Factors	SFu = **2.000**	*(Ultimate)*	SFy = **1.250**	*(Yield)*
	FF = **1.150**	*(Fitting Factor)*		
Input Loads	V = **489** lbf	*(Shear Load)*	P = **49.800** lbf	*(Axial Load)*
Bolt calc results	Pb = **2022** lbf	*(Max Bolt Load)*		
Dimensions	L = **0.526** in	*(Length of Bolt)*	twh = **0.032** in	*(Thickness of Washer)*

Shear Tear-Out Check

Recall bolt hole dimensions

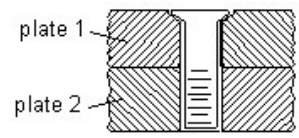

$tf_1 := tf1$ $\quad tf_1 = \mathbf{0.100}\,in$ *(Entire Thickness of Flange 1)* $\quad Tf1E = \mathbf{0.960}$

$tf_2 := tf2$ $\quad tf_2 = \mathbf{0.125}\,in$ *(Entire Thickness of Flange 2)* $\quad Tf2E = \mathbf{0.980}$

$edge_1 := edge1$ $\quad edge_1 = \mathbf{0.750}\,in$ *(Edge Distance for Hole in Plate 1)*

$edge_2 := edge2$ $\quad edge_2 = \mathbf{0.312}\,in$ *(Edge Distance for Hole in Plate 2)*

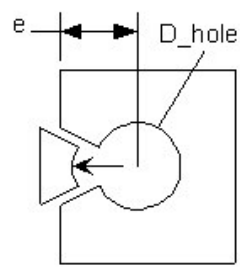

Typical shear tear-out failure

$D = \mathbf{0.190}\,in$ *(Diameter of Bolt)*

$D_shank = \mathbf{0.188}\,in$ *(Min. Shank Diameter of Bolt)*

$D_hole = \mathbf{0.213}\,in$ *(Diameter of Hole)*

Shear area of the mating components (Ref. Analysis & Design of Flight Vehicle Structures, Bruhn, Pg. D1.5)

$$A_{shrpl} := \overrightarrow{\left[2 \cdot tf \cdot \left(edge - \frac{1}{2} D_hole\right)\right]} \qquad \begin{pmatrix} Plate1 \\ Plate2 \end{pmatrix} \qquad A_{shrpl} = \begin{pmatrix} \mathbf{0.129} \\ \mathbf{0.051} \end{pmatrix} in^2$$

Allowables for plates that fastener goes through

$Fsu_1 := Tf1E \cdot \mathbf{36} \cdot ksi$ $\quad Fsu_1 = \mathbf{34.560}\,ksi$ *(Ultimate Shear Allowable for Plate 1)*

$Fsu_2 := Tf2E \cdot \mathbf{39} \cdot ksi$ $\quad Fsu_2 = \mathbf{38.220}\,ksi$ *(Ultimate Shear Allowable for Plate 2)*

$$P_{su} := \overrightarrow{\left(A_{shrpl} \cdot Fsu\right)} \qquad P_{su} = \begin{pmatrix} \mathbf{4448} \\ \mathbf{1964} \end{pmatrix} lbf$$ *(Shear Ultimate Allowable)*

MS for Shear Tear-Out

$$MS_{su} := \overrightarrow{\left(\frac{P_{su}}{V \cdot SFu \cdot FF} - \mathbf{1}\right)} \qquad \begin{pmatrix} Plate1 \\ Plate2 \end{pmatrix} \qquad MS_{su} = \begin{pmatrix} \mathbf{2.95} \\ \mathbf{0.75} \end{pmatrix}$$

$MS_{bh_1} := \min(MS_{su})$

$MS_{bh_1} = \mathbf{0.746}$ ***... Shear Tear-Out MS***

Bearing Check

Recall bolt hole dimensions

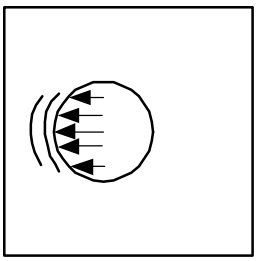

Typical Bearing Failure

$tf_1 = \mathbf{0.100}\,in$ *(Thickness of Plate 1)*

$tf_2 = \mathbf{0.125}\,in$ *(Thickness of Plate 2)*

$edge_1 = \mathbf{0.750}\,in$ *(Edge Distance for thru Hole in Plate 1)*

$edge_2 = \mathbf{0.312}\,in$ *(Edge Distance for tapped Hole in Plate 2)*

$A_{br} := \overrightarrow{(tf \cdot \min(D, D_shank))}$ $\begin{pmatrix} Plate1 \\ Plate2 \end{pmatrix}$ $A_{br} = \begin{pmatrix} \mathbf{0.019} \\ \mathbf{0.024} \end{pmatrix} in^2$ *(Bearing Areas)*

$e_D := \dfrac{\overrightarrow{edge}}{D_hole}$ $e_D = \begin{pmatrix} \mathbf{3.521} \\ \mathbf{1.465} \end{pmatrix}$ *(e/D for Plates)*

Allowables for plates that fastener goes through

Bearing strength at e/D = 1.5

$Fbru15_1 := Tf1E \cdot \mathbf{99}ksi$ $Fbru15_1 = \mathbf{95.04}\,ksi$

$Fbry15_1 := Tf1E \cdot \mathbf{83} \cdot ksi$ $Fbry15_1 = \mathbf{79.68}\,ksi$

$Fbru15_2 := Tf2E \cdot \mathbf{102}ksi$ $Fbru15_2 = \mathbf{99.96}\,ksi$

$Fbry15_2 := Tf2E \cdot \mathbf{82} \cdot ksi$ $Fbry15_2 = \mathbf{80.36}\,ksi$

Bearing strength at e/D = 2.0

$Fbru20_1 := Tf1E \cdot \mathbf{126}ksi$ $Fbru20_1 = \mathbf{120.96}\,ksi$

$Fbry20_1 := Tf1E \cdot \mathbf{96} \cdot ksi$ $Fbry20_1 = \mathbf{92.160}\,ksi$

$Fbru20_2 := Tf2E \cdot \mathbf{132}ksi$ $Fbru20_2 = \mathbf{129.36}\,ksi$

$Fbry20_2 := Tf2E \cdot \mathbf{97} \cdot ksi$ $Fbry20_2 = \mathbf{95.060}\,ksi$

Modified bearing strength

$$Fbru_m_1 := if\left[e_D_1 > 2.0, Fbru20_1, if\left[(e_D_1 > 1.5)\cdot(e_D_1 < 2.0), Fbru15_1 + \frac{e_D_1 - 1.5}{2.0 - 1.5}\cdot(Fbru20_1 - Fbru15_1), \left[Fbru15_1\cdot(e_D_1 - 0.5)\right]\right]\right]$$

$$Fbru_m_2 := if\left[e_D_2 > 2.0, Fbru20_2, if\left[(e_D_2 > 1.5)\cdot(e_D_2 < 2.0), Fbru15_2 + \frac{e_D_2 - 1.5}{2.0 - 1.5}\cdot(Fbru20_2 - Fbru15_2), \left[Fbru15_2\cdot(e_D_2 - 0.5)\right]\right]\right]$$

$$Fbry_m_1 := if\left[e_D_1 > 2.0, Fbry20_1, if\left[(e_D_1 > 1.5)\cdot(e_D_1 < 2.0), Fbry15_1 + \frac{e_D_1 - 1.5}{2.0 - 1.5}\cdot(Fbry20_1 - Fbry15_1), \left[Fbry15_1\cdot(e_D_1 - 0.5)\right]\right]\right]$$

$$Fbry_m_2 := if\left[e_D_2 > 2.0, Fbry20_2, if\left[(e_D_2 > 1.5)\cdot(e_D_2 < 2.0), Fbry15_2 + \frac{e_D_2 - 1.5}{2.0 - 1.5}\cdot(Fbry20_2 - Fbry15_2), \left[Fbry15_2\cdot(e_D_2 - 0.5)\right]\right]\right]$$

$Fbru_m = \begin{pmatrix} \mathbf{120.96} \\ \mathbf{96.44} \end{pmatrix} \begin{pmatrix} Plate1 \\ Plate2 \end{pmatrix}$ *(Ultimate)*

$Fbry_m = \begin{pmatrix} \mathbf{92.16} \\ \mathbf{77.53} \end{pmatrix} \begin{pmatrix} Plate1 \\ Plate2 \end{pmatrix}$ *(Yield)*

$P_{bru} := \overrightarrow{(A_{br} \cdot Fbru_m)}$ $\quad P_{bru} = \begin{pmatrix} 2280 \\ 2272 \end{pmatrix} lbf$ *(Bearing Ultimate Allowable)*

$P_{bry} := \overrightarrow{(A_{br} \cdot Fbry_m)}$ $\quad P_{bry} = \begin{pmatrix} 1737 \\ 1827 \end{pmatrix} lbf$ *(Bearing Yield Allowable)*

MS for Bearing Failure

$\mathbf{MS_{bru}} := \overrightarrow{\left(\frac{P_{bru}}{V \cdot SFu \cdot FF} - 1\right)}$ $\quad \mathbf{MS_{bru}} = \begin{pmatrix} 1.027 \\ 1.020 \end{pmatrix}$ $\begin{pmatrix} \text{Plate1} \\ \text{Plate2} \end{pmatrix}$

$MS_{bh_2} := \min(\mathbf{MS_{bru}})$

$MS_{bh_2} = 1.02$ ***... Bearing MS based on Ultimate Strength***

$MS_{bry} := \overrightarrow{\left(\frac{P_{bry}}{V \cdot SFy \cdot FF} - 1\right)}$ $\quad MS_{bry} = \begin{pmatrix} 1.47 \\ 1.6 \end{pmatrix}$ $\begin{pmatrix} \text{Plate1} \\ \text{Plate2} \end{pmatrix}$

$MS_{bh_3} := \min(MS_{bry})$

$MS_{bh_3} = 1.471$ ***... Bearing MS based on Yield Strength***

Prepared By	Name Kent Peters	Date 08/21/2008	Engineering and Science Contract Group *Structural Analysis Section*	File Name DS UPS 2.70in Bathtub to Bumper
Checked By	C. Bala			Draw ing No. SDG39137848
Title	Debris Shield Fastener Joint Analysis for Bolt/Washer with Nutplate/No Washer UPS Side - Bathtub Bracket to Outer Bumper			

CHECK

Note: Figure is for reference only.
Not to scale. Actual joint made differ.
Washer may be on nut side, head side, or both

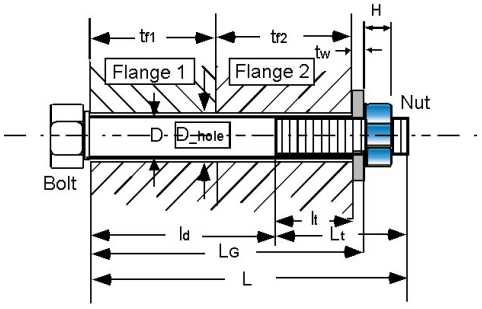

Bolt := **"NAS1133E4, .1900-32, 0.526 L, A-286"**

Washer := **"NAS1149E0332R"**

Nut := **"MS21076L3N"**

Flange_1 := **"2.70 in Bathtub Bracket"**
Part_Number_1 := **"SDG39137848-002"**
Material_1 := **"AL ALY 6061-T651"**

Minimum edge distance of flange one — edge1 := **.5**·in

Flange_2 := **"Outer Bumper"**
Part_Number_2 := **"SDG39137854"**
Material_2 := **"AL ALY 2219-T87"**

Minimum edge distance of flange two — edge2 := **.475**·in

Loads (reference)

Applied tensile load — P := **49.8**lbf

Applied shear load — V := **489.**lbf

Applied bending moment — M := **0**in·lbf

(Worst case combination)

Factors of Safety (reference)

SFu := **2.00** *(Ultimate)*

SFy := **1.25** *(Yield)*

FF := **1.15** *(Fitting factor)*

SFsep := **1.20** *(Joint Separation)*

Temperature data (reference)

Assembly — Temp_initial := **70**·deg

Temp_max := **140**·deg *(Maximum)*

Temp_min := **–76**·deg *(Minimum)*

Note: these are maximum temperatures that hardware sees / if maximum load occurs at a different temperature this will be conservative

Bolt Data (Bolt = **"NAS1133E4, .1900-32, 0.526 L, A-286"**)

Nominal diameter of bolt — D := **.19**·in

Number of threads/inch — Nt := **32**·$\frac{1}{in}$

Shank diameter of bolt — D_shank := **.1885**·in

Note: if there is a retainer groove in the fastener, this should be the calculated diameter to give an equivalent cross sectional area

Total length of bolt — L := **.526**·in

Threaded length — Lt := **.276**·in *(If bolt is fully threaded, input Lt = L)*

Bolt head dia. across flats — dw := **.357**·in *(dia of pressure boss if it exists, otherwise dia of head)*

Bolt head height — bh := **.122**·in *(head height is 0 if bolt is flat head)*

Bolt Data cont. (Bolt = **"NAS1133E4, .1900-32, 0.526 L, A-286"**)

Fri Apr 27 14:15:35 2007

Thread data lookup table is hidden

This file uses the data shown in \\escfil02\2i11_mathcad\8307_bolts\Rev_D\thread_data.mcd

Temperature correction factor for bolt strength — TSu_bolt := **.96** — TSy_bolt := **.96** *(MMPDS-03, Fig. 6.2.1.1.1.)*

Bolt ultimate tensile allowable stress — Ftu_bolt := **160000**·psi — Fty_bolt := **120000**·psi

Bolt ultimate shear allowable stress — Fsu_bolt := **0.6**·Ftu_bolt

Temperature correction factor for bolt modulus — TE_bolt := **.98** *(MMPDS-03, Fig. 6.2.1.1.4(a).)*

Modulus of elasticity of bolt — E_bolt := $\left(29.1 \cdot 10^{6} \cdot psi\right)$ *(MMPDS-03, Fig. 6.2.1.0(b).)*

Thermal coefficients for bolt

$\beta_bolt_hot := 9.1 \cdot 10^{-6} \cdot \frac{\frac{in}{in}}{deg}$ $\beta_bolt_cold := 8.5 \cdot 10^{-6} \cdot \frac{\frac{in}{in}}{deg}$ *(MMPDS-03, Fig. 6.2.1.0.)*

Washer Data (Washer = **"NAS1149E0332R"**)

Thickness of washers:

head — twh := **.032**·in

nut — twn := **0.0**·in

(these are total washer thickness, if there are more than one)

Diameter of washer under head:

Outer — Dwoh := **.438**in

Inner — Dwih := **.203**·in

Diameter of washer under nut:

Outer — Dwon := **0.0**in

Inner — Dwin := **0.0**·in

Note: If there is no washer - tw's, Dwo's and Dwi's should be zero

Modulus of elasticity:

head — E_washerh := $\left(29.1 \cdot 10^{6} \cdot psi\right)$

nut — E_washern := $\left(0.0 \cdot 10^{6} \cdot psi\right)$

Temperature correction factor for modulus:

head — TE_washerh := **.98**

nut — TE_washern := **0.0**

(same as bolt)

Nut Data (Nut = **"MS21076L3N"**)

Height of nut — H := **.250**·in

Nut dia. across flats — Dn := **.290**·in

Temperature correction factor for nut strength — TS_nut := **.96** *(same as bolt)*

Ultimate allowable stress, tensile — Ftu_nut := **125000**·psi — Fsu_nut := **0.6**·Ftu_nut *(Shear)*

Ultimate axial strength of nut — Ptu_nut := **2460**·lbf

Flange data (Stiffness of the joint depends upon number of members in the grip of the fasteners & their material properties)

Diameter of thru hole $D_hole := .226 \cdot in$

Flange_1 = **"2.70 in Bathtub Bracket"**

Flange_2 = **"Outer Bumper"**

Material_1 = **"AL ALY 6061-T651"**

Material_2 = **"AL ALY 2219-T87"**

Thickness of flanges

$tf1 := .08 \cdot in$

$tf2 := .10 in$

Compressive Modulus of elastici

$E_flange1 := \left(10.1 \cdot 10^{6} \cdot psi\right)$

$E_flange2 := \left(10.8 \cdot 10^{6} \cdot psi\right)$

Temperature correction factor (modul

$Tf1E := .98$

$Tf2E := .96$

Coefficient of thermal expansion for flanges

$\beta_flange1_hot := 12.8 \cdot 10^{-6} \cdot \frac{\frac{in}{in}}{deg}$

$\beta_flange2_hot := 12.4 \cdot 10^{-6} \cdot \frac{\frac{in}{in}}{deg}$

$\beta_flange1_cold := 12.1 \cdot 10^{-6} \cdot \frac{\frac{in}{in}}{deg}$

$\beta_flange2_cold := 11.6 \cdot 10^{-6} \cdot \frac{\frac{in}{in}}{deg}$

Torque/Preload data

Maximum torque $Tmax := 44.4 \cdot in \cdot lbf$

Minimum torque $Tmin := 37.8 in \cdot lbf$

Joint is lubed/dry

Preload Uncertainty $u := 0.25$ *(0.25 lubed/0.35 dry)*

Torque coefficient $k := 0.15$ *(0.15 lubed/0.20 dry)*

Loading plane factor $n := 0.5$

Stiffness and Margin calculations are hidden

This file uses the calculations shown in \\escfil02\2i11_mathcad\8307_bolts\Rev_D\bolt_stiffness_nut.mcd

Fri Apr 27 14:15:49 2007

Bolt Load data

Bolt/joint stiffness factor	= **0.355**	Preload due to temperature	Pthr_pos = **51.4** lbf
Max. preload	PLDmax = **1999** lbf		Pthr_neg = **−102.5** lbf
Min. preload	PLDmin = **795** lbf		
Nom. preload	PLDnom = **1558** lbf	Uncertainty factor	u = **0.250**
Preload to yield ratio (nom.)	PLDratio = **0.703**	Torque coefficient	k = **0.150**
Joint separation load	Psep = **59.760** lbf	Loading plane factor	n = **0.500**

Bolt Load data (cont.)

Applied Tensile load on the bolt P = **49.800** lbf

Applied shear on the bolt V = **489.000** lbf

Applied bending on the bolt M = **0.000** in·lbf

Max. load on the bolt with preload and Factor of safety

Pb = **2019** lbf *(ultimate)*

Pby = **2012** lbf *(yield)*

Max. load on the bolt with preload WithOut factor of safety

Pbapp = **2009** lbf

Bolt ultimate tensile strength PAt = **2957** lbf

Thread pullout strength PAs = **2362** lbf

Nut ultimate tensile strength Ptu_nut = **2362** lbf

Bolt shear strength VAu = **2572** lbf

Bolt bending strength MAu = **61** in·lbf

General Checks

length_check = **"Bolt length is sufficient and nut fully engaged"**

cone_check = **"Joint pressure cone does not extend pass flange edge"**

preload_check = **"Nominal preload >= 65% of bolt yield strength"**

washer_check = **"Washers under head and nut do not extend past flanges"**

Summary of Margins for bolt:

Joint separation	MS_1 = **13.06**	Direct Thread shear Ultimate	MS_6 = **19.62**
Direct Tension Ultimate	MS_2 = **24.81**	Total Thread shear Ultimate	MS_7 = **0.17**
Direct Tension Yield	MS_3 = **29.98**	Shear Ultimate	MS_8 = **1.29**
Total Tension Ultimate	MS_4 = **0.46**	Bending Ultimate	MS_9 = **100**
Total Tension Yield	MS_5 = **0.1**	Combined shear, tension and bending ultimate	MS_{10} = **0.32**

Smallest margin of safety for the bolt, and the failure mode:

MSbolt = **0.1**

Failure_Mode = **"Total Tension Yield"**

Prepared By	Name Kent Peters	Date 08/21/2008	Engineering and Science Contract Group *Structural Analysis Section*	File Name DS UPS 2.70in Bathtub to Bumper
Checked By	C. Bala			Draw ing No. SDG39137848
Title	Debris Shield Fastener Joint Analysis for Bolt/Washer with Nutplate/No Washer UPS Side - Bathtub Bracket to Outer Bumper			

Fail-safe Analysis

Fail-safe Loads

Applied tensile load $P_FS := 105.6 \cdot lbf$

Applied shear load $V_FS := 950.4 \cdot lbf$

Applied bending moment $M_FS := 0 \cdot in \cdot lbf$

Fail-safe Factors of Safety

Ultimate $SFu_FS := 1.0$

Joint Separation $SFsep_FS := 1.0$

Fail Safe Margin calculations are hidden / stiffness & allowable data is not recalculated

This file uses the calculations shown in \\escfil02\2i11_mathcad\8307_bolts\Rev_D\bolt_stiffness_nut_FS.mcd

Fri Apr 27 14:16:05 2007

Bolt Fail-safe Load data

Joint separation load $Psep_FS = 105.600\ lbf$

Max. load on the bolt(ultimate) $Pb_FS = 2020.4\ lbf$

Summary of fail-safe Margins for bolt:

Joint separation $MS_FS_1 = 6.96$

Direct Tension Ultimate $MS_FS_2 = 23.35$

Total Tension Ultimate $MS_FS_3 = 0.46$

Direct Thread shear Ultimate $MS_FS_4 = 18.45$

Total Thread shear Ultimate $MS_FS_5 = 0.17$

Shear Ultimate $MS_FS_6 = 1.35$

Bending Ultimate $MS_FS_7 = 10$

Combined shear, tension and bending ultimate $MS_FS_8 = 0.33$

Determination of the smallest fail-safe margin of safety for the bolt, and the failure mode:

$MSbolt_FS = 0.17$

$Failure_Mode_FS =$ **"Total Thread Shear Ultimate (Nut)"**

Prepared By	Name Kent Peters	Date 08/21/2008	Engineering and Science Contract Group *Structural Analysis Section*	File Name DS UPS 2.70in Bathtub to Bumper
Checked By	C. Bala			Draw ing No. SDG39137848
Title	Debris Shield Fastener Joint Analysis for Bolt/Washer with Nutplate/No Washer UPS Side - Bathtub Bracket to Outer Bumper			

Bolt Hole Analysis

Recall loads from bolt calculation

Safety Factors	SFu = **2.000**	*(Ultimate)*	SFy = **1.250**	*(Yield)*
	FF = **1.150**	*(Fitting Factor)*		
Input Loads	V = **489** lbf	*(Shear Load)*	P = **49.800** lbf	*(Axial Load)*
Bolt calc results	Pb = **2019** lbf	*(Max Bolt Load)*		
Dimensions	L = **0.526** in	*(Length of Bolt)*	twh = **0.032** in	*(Thickness of Washer)*

Shear Tear-Out Check

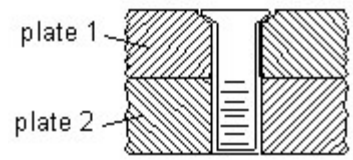

Recall bolt hole dimensions

$tf_1 := tf1$	$tf_1 = 0.080$ in	*(Entire Thickness of Flange 1)*	Tf1E = **0.980**
$tf_2 := tf2$	$tf_2 = 0.100$ in	*(Entire Thickness of Flange 2)*	Tf2E = **0.960**
$edge_1 := edge1$	$edge_1 = 0.500$ in	*(Edge Distance for Hole in Plate 1)*	
$edge_2 := edge2$	$edge_2 = 0.475$ in	*(Edge Distance for Hole in Plate 2)*	

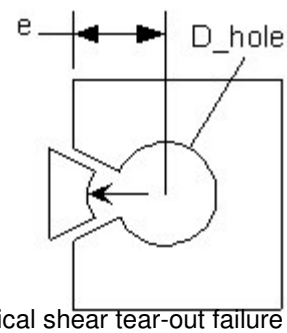

Typical shear tear-out failure

D = **0.190** in	*(Diameter of Bolt)*	
D_shank = **0.188** in	*(Min. Shank Diameter of Bolt)*	
D_hole = **0.226** in	*(Diameter of Hole)*	

Shear area of the mating components (Ref. Analysis & Design of Flight Vehicle Structures, Bruhn, Pg. D1.5)

$$A_{shrpl} := \overrightarrow{\left[2 \cdot tf \cdot \left(edge - \frac{1}{2} D_hole\right)\right]} \qquad \begin{pmatrix} \text{Plate1} \\ \text{Plate2} \end{pmatrix} \qquad A_{shrpl} = \begin{pmatrix} 0.062 \\ 0.072 \end{pmatrix} in^2$$

Allowables for plates that fastener goes through

$Fsu_1 := Tf1E \cdot 27 \cdot ksi$ $\qquad Fsu_1 = 26.460$ ksi $\qquad$ *(Ultimate Shear Allowable for Plate 1)*

$Fsu_2 := Tf2E \cdot 36 \cdot ksi$ $\qquad Fsu_2 = 34.560$ ksi $\qquad$ *(Ultimate Shear Allowable for Plate 2)*

$$P_{su} := \overrightarrow{\left(A_{shrpl} \cdot Fsu\right)} \qquad P_{su} = \begin{pmatrix} 1638 \\ 2502 \end{pmatrix} lbf$$ *(Shear Ultimate Allowable)*

MS for Shear Tear-Out

$$MS_{su} := \overrightarrow{\left(\frac{P_{su}}{V \cdot SFu \cdot FF} - 1\right)} \qquad \begin{pmatrix} \text{Plate1} \\ \text{Plate2} \end{pmatrix} \qquad MS_{su} = \begin{pmatrix} 0.46 \\ 1.22 \end{pmatrix}$$

$$MS_{bh_1} := \min\left(MS_{su}\right)$$

$MS_{bh_1} = 0.457$ ***... Shear Tear-Out MS***

Bearing Check

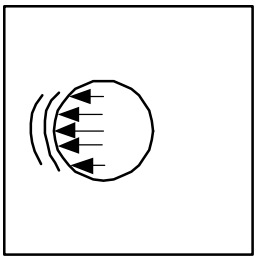

Typical Bearing Failure

Recall bolt hole dimensions

$tf_1 = \mathbf{0.080}\,in$ *(Thickness of Plate 1)*

$tf_2 = \mathbf{0.100}\,in$ *(Thickness of Plate 2)*

$edge_1 = \mathbf{0.500}\,in$ *(Edge Distance for thru Hole in Plate 1)*

$edge_2 = \mathbf{0.475}\,in$ *(Edge Distance for tapped Hole in Plate 2)*

$A_{br} := \overrightarrow{(tf \cdot \min(D, D_shank))}$ $\begin{pmatrix} \text{Plate1} \\ \text{Plate2} \end{pmatrix}$ $A_{br} = \begin{pmatrix} \mathbf{0.015} \\ \mathbf{0.019} \end{pmatrix} in^2$ *(Bearing Areas)*

$e_D := \frac{\overrightarrow{edge}}{D_hole}$ $e_D = \begin{pmatrix} \mathbf{2.212} \\ \mathbf{2.102} \end{pmatrix}$ *(e/D for Plates)*

Allowables for plates that fastener goes through

Bearing strength at e/D = 1.5

$Fbru15_1 := Tf1E \cdot \mathbf{67}ksi$ $Fbru15_1 = \mathbf{65.66}\,ksi$

$Fbry15_1 := Tf1E \cdot \mathbf{50} \cdot ksi$ $Fbry15_1 = \mathbf{49}\,ksi$

$Fbru15_2 := Tf2E \cdot \mathbf{99}ksi$ $Fbru15_2 = \mathbf{95.04}\,ksi$

$Fbry15_2 := Tf2E \cdot \mathbf{83} \cdot ksi$ $Fbry15_2 = \mathbf{79.68}\,ksi$

Bearing strength at e/D = 2.0

$Fbru20_1 := Tf1E \cdot \mathbf{88}ksi$ $Fbru20_1 = \mathbf{86.24}\,ksi$

$Fbry20_1 := Tf1E \cdot \mathbf{58} \cdot ksi$ $Fbry20_1 = \mathbf{56.840}\,ksi$

$Fbru20_2 := Tf2E \cdot \mathbf{126}ksi$ $Fbru20_2 = \mathbf{120.96}\,ksi$

$Fbry20_2 := Tf2E \cdot \mathbf{96} \cdot ksi$ $Fbry20_2 = \mathbf{92.160}\,ksi$

Modified bearing strength

$$Fbru_m_1 := if\left[e_D_1 > 2.0, Fbru20_1, if\left[(e_D_1 > 1.5)\cdot(e_D_1 < 2.0), Fbru15_1 + \frac{e_D_1 - 1.5}{2.0 - 1.5}\cdot(Fbru20_1 - Fbru15_1), \left[Fbru15_1\cdot(e_D_1 - 0.5)\right]\right]\right]$$

$$Fbru_m_2 := if\left[e_D_2 > 2.0, Fbru20_2, if\left[(e_D_2 > 1.5)\cdot(e_D_2 < 2.0), Fbru15_2 + \frac{e_D_2 - 1.5}{2.0 - 1.5}\cdot(Fbru20_2 - Fbru15_2), \left[Fbru15_2\cdot(e_D_2 - 0.5)\right]\right]\right]$$

$$Fbry_m_1 := if\left[e_D_1 > 2.0, Fbry20_1, if\left[(e_D_1 > 1.5)\cdot(e_D_1 < 2.0), Fbry15_1 + \frac{e_D_1 - 1.5}{2.0 - 1.5}\cdot(Fbry20_1 - Fbry15_1), \left[Fbry15_1\cdot(e_D_1 - 0.5)\right]\right]\right]$$

$$Fbry_m_2 := if\left[e_D_2 > 2.0, Fbry20_2, if\left[(e_D_2 > 1.5)\cdot(e_D_2 < 2.0), Fbry15_2 + \frac{e_D_2 - 1.5}{2.0 - 1.5}\cdot(Fbry20_2 - Fbry15_2), \left[Fbry15_2\cdot(e_D_2 - 0.5)\right]\right]\right]$$

$Fbru_m = \begin{pmatrix} \mathbf{86.24} \\ \mathbf{120.96} \end{pmatrix} \begin{pmatrix} \text{Plate1} \\ \text{Plate2} \end{pmatrix}$ *(Ultimate)*

$Fbry_m = \begin{pmatrix} \mathbf{56.84} \\ \mathbf{92.16} \end{pmatrix} \begin{pmatrix} \text{Plate1} \\ \text{Plate2} \end{pmatrix}$ *(Yield)*

$P_{bru} := \overrightarrow{(A_{br} \cdot Fbru_m)}$ $\quad P_{bru} = \begin{pmatrix} 1300 \\ 2280 \end{pmatrix} lbf$ *(Bearing Ultimate Allowable)*

$P_{bry} := \overrightarrow{(A_{br} \cdot Fbry_m)}$ $\quad P_{bry} = \begin{pmatrix} 857 \\ 1737 \end{pmatrix} lbf$ *(Bearing Yield Allowable)*

MS for Bearing Failure

$\mathbf{MS_{bru}} := \overrightarrow{\left(\frac{P_{bru}}{V \cdot SFu \cdot FF} - 1\right)}$ $\quad \mathbf{MS_{bru}} = \begin{pmatrix} 0.156 \\ 1.027 \end{pmatrix}$ $\begin{pmatrix} \text{Plate1} \\ \text{Plate2} \end{pmatrix}$

$MS_{bh_2} := \min(\mathbf{MS_{bru}})$

$MS_{bh_2} = \mathbf{0.156}$ ***... Bearing MS based on Ultimate Strength***

$MS_{bry} := \overrightarrow{\left(\frac{P_{bry}}{V \cdot SFy \cdot FF} - 1\right)}$ $\quad MS_{bry} = \begin{pmatrix} 0.22 \\ 1.47 \end{pmatrix}$ $\begin{pmatrix} \text{Plate1} \\ \text{Plate2} \end{pmatrix}$

$MS_{bh_3} := \min(MS_{bry})$

$MS_{bh_3} = \mathbf{0.219}$ ***... Bearing MS based on Yield Strength***

Prepared By	Name Kent Peters	Date 08/21/2008	Engineering and Science Contract Group *Structural Analysis Section*	File Name DS UPS 2.38in Bathtub to Bumper
Checked By	C. Bala			Draw ing No. SDG39137848
Title	Debris Shield Fastener Joint Analysis for Bolt/Washer with Nutplate/No Washer UPS Side - Bathtub Bracket to Outer Bumper			

CHECK

Note: Figure is for reference only.
Not to scale. Actual joint made differ.
Washer may be on nut side, head side, or both

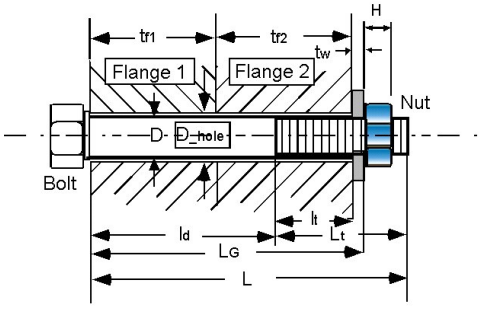

Bolt := **"NAS1133E4, .1900-32, 0.526 L, A-286"**

Washer := **"NAS1149E0332R"**

Nut := **"MS21076L3N"**

Flange_1 := **"2.38 in Bathtub Bracket"**
Part_Number_1 := **"SDG39137848-001"**
Material_1 := **"AL ALY 6061-T651"**

Flange_2 := **"Outer Bumper"**
Part_Number_2 := **"SDG39137854"**
Material_2 := **"AL ALY 2219-T87"**

Minimum edge distance of flange one — edge1 := **.5**·in

Minimum edge distance of flange two — edge2 := **.952**·in

Loads (reference)

Applied tensile load — P := **49.8**lbf

Applied shear load — V := **489.**lbf

Applied bending moment — M := **0**in·lbf

(Worst case combination)

Factors of Safety (reference)

SFu := **2.00** *(Ultimate)*

SFy := **1.25** *(Yield)*

FF := **1.15** *(Fitting factor)*

SFsep := **1.20** *(Joint Separation)*

Temperature data (reference)

Assembly — Temp_initial := **70**·deg

Temp_max := **140**·deg *(Maximum)*

Temp_min := **–76**·deg *(Minimum)*

Note: these are maximum temperatures that hardware sees / if maximum load occurs at a different temperature this will be conservative

Bolt Data (Bolt = **"NAS1133E4, .1900-32, 0.526 L, A-286"**)

Nominal diameter of bolt — D := **.19**·in

Number of threads/inch — Nt := **32**·$\frac{1}{in}$

Shank diameter of bolt — D_shank := **.1885**·in

Note: if there is a retainer groove in the fastener, this should be the calculated diameter to give an equivalent cross sectional area

Total length of bolt — L := **.526**·in

Threaded length — Lt := **.276**·in *(If bolt is fully threaded, input Lt = L)*

Bolt head dia. across flats — dw := **.357**·in *(dia of pressure boss if it exists, otherwise dia of head)*

Bolt head height — bh := **.122**·in *(head height is 0 if bolt is flat head)*

Bolt Data cont. (Bolt = **"NAS1133E4, .1900-32, 0.526 L, A-286"**)

Fri Apr 27 14:15:35 2007

Thread data lookup table is hidden

This file uses the data shown in \\escfil02\2i11_mathcad\8307_bolts\Rev_D\thread_data.mcd

Temperature correction factor for bolt strength: $TSu_bolt := \mathbf{.96}$ $TSy_bolt := \mathbf{.96}$ *(MMPDS-03, Fig. 6.2.1.1.1.)*

Bolt ultimate tensile allowable stress: $Ftu_bolt := \mathbf{160000} \cdot psi$ $Fty_bolt := \mathbf{120000} \cdot psi$

Bolt ultimate shear allowable stress: $Fsu_bolt := \mathbf{0.6} \cdot Ftu_bolt$

Temperature correction factor for bolt modulus: $TE_bolt := \mathbf{.98}$ *(MMPDS-03, Fig. 6.2.1.1.4(a).)*

Modulus of elasticity of bolt: $E_bolt := \left(\mathbf{29.1} \cdot \mathbf{10}^{6} \cdot psi\right)$ *(MMPDS-03, Fig. 6.2.1.0(b).)*

Thermal coefficients for bolt

$\beta_bolt_hot := \mathbf{9.1} \cdot \mathbf{10}^{-6} \cdot \frac{\frac{in}{in}}{deg}$ $\beta_bolt_cold := \mathbf{8.5} \cdot \mathbf{10}^{-6} \cdot \frac{\frac{in}{in}}{deg}$ *(MMPDS-03, Fig. 6.2.1.0.)*

Washer Data (Washer = **"NAS1149E0332R"**)

Thickness of washers:

head $twh := \mathbf{.032} \cdot in$

nut $twn := \mathbf{0.0} \cdot in$

(these are total washer thickness, if there are more than one)

Diameter of washer under head:

Outer $Dwoh := \mathbf{.438} in$

Inner $Dwih := \mathbf{.203} \cdot in$

Diameter of washer under nut:

Outer $Dwon := \mathbf{0.0} in$

Inner $Dwin := \mathbf{0.0} \cdot in$

Note: If there is no washer - tw's, Dwo's and Dwi's should be zero

Modulus of elasticity:

head $E_washerh := \left(\mathbf{29.1} \cdot \mathbf{10}^{6} \cdot psi\right)$

nut $E_washern := \left(\mathbf{0.0} \cdot \mathbf{10}^{6} \cdot psi\right)$

Temperature correction factor for modulus:

head $TE_washerh := \mathbf{.98}$

nut $TE_washern := \mathbf{0.0}$

(same as bolt)

Nut Data (Nut = **"MS21076L3N"**)

Height of nut: $H := \mathbf{.250} \cdot in$

Nut dia. across flats: $Dn := \mathbf{.290} \cdot in$

Temperature correction factor for nut strength: $TS_nut := \mathbf{.96}$ *(same as bolt)*

Ultimate allowable stress, tensile: $Ftu_nut := \mathbf{125000} \cdot psi$ $Fsu_nut := \mathbf{0.6} \cdot Ftu_nut$ *(Shear)*

Ultimate axial strength of nut: $Ptu_nut := \mathbf{2460} \cdot lbf$

Prepared By	Name Kent Peters	Date 08/21/2008	Engineering and Science Contract Group *Structural Analysis Section*	File Name DS UPS 2.38in Bathtub to Bumper
Checked By	C. Bala			Draw ing No. SDG39137848
Title	Debris Shield Fastener Joint Analysis for Bolt/Washer with Nutplate/No Washer UPS Side - Bathtub Bracket to Outer Bumper			

Flange data (Stiffness of the joint depends upon number of members in the grip of the fasteners & their material properties)

Diameter of thru hole $D_hole := .226 \cdot in$

Flange_1 = **"2.38 in Bathtub Bracket"**

Flange_2 = **"Outer Bumper"**

Material_1 = **"AL ALY 6061-T651"**

Material_2 = **"AL ALY 2219-T87"**

Thickness of flanges

$tf1 := .08 \cdot in$

$tf2 := .10 in$

Compressive Modulus of elastici

$E_flange1 := \left(10.1 \cdot 10^{6} \cdot psi\right)$

$E_flange2 := \left(10.8 \cdot 10^{6} \cdot psi\right)$

Temperature correction factor (modul

$Tf1E := .98$

$Tf2E := .96$

Coefficient of thermal expansion for flanges

$\beta_flange1_hot := 12.8 \cdot 10^{-6} \cdot \frac{\frac{in}{in}}{deg}$

$\beta_flange2_hot := 12.4 \cdot 10^{-6} \cdot \frac{\frac{in}{in}}{deg}$

$\beta_flange1_cold := 12.1 \cdot 10^{-6} \cdot \frac{\frac{in}{in}}{deg}$

$\beta_flange2_cold := 11.6 \cdot 10^{-6} \cdot \frac{\frac{in}{in}}{deg}$

Torque/Preload data

Maximum torque $Tmax := 44.4 \cdot in \cdot lbf$

Minimum torque $Tmin := 37.8 in \cdot lbf$

Joint is lubed/dry

Preload Uncertainty $u := 0.25$ *(0.25 lubed/0.35 dry)*

Torque coefficient $k := 0.15$ *(0.15 lubed/0.20 dry)*

Loading plane factor $n := 0.5$

Stiffness and Margin calculations are hidden

This file uses the calculations shown in \\escfil02\2i11_mathcad\8307_bolts\Rev_D\bolt_stiffness_nut.mcd

Fri Apr 27 14:15:49 2007

Bolt Load data

Bolt/joint stiffness factor	= **0.355**	Preload due to temperature	Pthr_pos = **51.4** lbf
Max. preload	PLDmax = **1999** lbf		Pthr_neg = **−102.5** lbf
Min. preload	PLDmin = **795** lbf		
Nom. preload	PLDnom = **1558** lbf	Uncertainty factor	u = **0.250**
Preload to yield ratio (nom.)	PLDratio = **0.703**	Torque coefficient	k = **0.150**
Joint separation load	Psep = **59.760** lbf	Loading plane factor	n = **0.500**

Bolt Load data (cont.)

Applied Tensile load on the bolt P = **49.800** lbf

Applied shear on the bolt V = **489.000** lbf

Applied bending on the bolt M = **0.000** in·lbf

Max. load on the bolt with preload and Factor of safety

Pb = **2019** lbf *(ultimate)*

Pby = **2012** lbf *(yield)*

Max. load on the bolt with preload WithOut factor of safety

Pbapp = **2009** lbf

Bolt ultimate tensile strength PAt = **2957** lbf

Thread pullout strength PAs = **2362** lbf

Nut ultimate tensile strength Ptu_nut = **2362** lbf

Bolt shear strength VAu = **2572** lbf

Bolt bending strength MAu = **61** in·lbf

General Checks

length_check = **"Bolt length is sufficient and nut fully engaged"**

cone_check = **"Joint pressure cone does not extend pass flange edge"**

preload_check = **"Nominal preload >= 65% of bolt yield strength"**

washer_check = **"Washers under head and nut do not extend past flanges"**

Summary of Margins for bolt:

Joint separation	MS_1 = **13.06**	Direct Thread shear Ultimate	MS_6 = **19.62**
Direct Tension Ultimate	MS_2 = **24.81**	Total Thread shear Ultimate	MS_7 = **0.17**
Direct Tension Yield	MS_3 = **29.98**	Shear Ultimate	MS_8 = **1.29**
Total Tension Ultimate	MS_4 = **0.46**	Bending Ultimate	MS_9 = **100**
Total Tension Yield	MS_5 = **0.1**	Combined shear, tension and bending ultimate	MS_{10} = **0.32**

Smallest margin of safety for the bolt, and the failure mode:

MSbolt = **0.1**

Failure_Mode = **"Total Tension Yield"**

Fail-safe Analysis

Fail-safe Loads

Applied tensile load $P_FS := 105.6 \cdot lbf$

Applied shear load $V_FS := 950.4 \cdot lbf$

Applied bending moment $M_FS := 0 \cdot in \cdot lbf$

Fail-safe Factors of Safety

Ultimate $SFu_FS := 1.0$

Joint Separation $SFsep_FS := 1.0$

Fail Safe Margin calculations are hidden / stiffness & allowable data is not recalculated

This file uses the calculations shown in \\escfil02\2i11_mathcad\8307_bolts\Rev_D\bolt_stiffness_nut_FS.mcd

Fri Apr 27 14:16:05 2007

Bolt Fail-safe Load data

Joint separation load $Psep_FS = 105.600\ lbf$

Max. load on the bolt(ultimate) $Pb_FS = 2020.4\ lbf$

Summary of fail-safe Margins for bolt:

Joint separation $MS_FS_1 = 6.96$

Direct Tension Ultimate $MS_FS_2 = 23.35$

Total Tension Ultimate $MS_FS_3 = 0.46$

Direct Thread shear Ultimate $MS_FS_4 = 18.45$

Total Thread shear Ultimate $MS_FS_5 = 0.17$

Shear Ultimate $MS_FS_6 = 1.35$

Bending Ultimate $MS_FS_7 = 10$

Combined shear, tension and bending ultimate $MS_FS_8 = 0.33$

Determination of the smallest fail-safe margin of safety for the bolt, and the failure mode:

$MSbolt_FS = 0.17$

$Failure_Mode_FS =$ **"Total Thread Shear Ultimate (Nut)"**

Prepared By	Name	Date	Engineering and Science Contract Group	File Name
	Kent Peters	08/21/2008		DS UPS 2.38in Bathtub to Bumper
Checked By	C. Bala		*Structural Analysis Section*	Draw ing No. SDG39137848
Title	Debris Shield Fastener Joint Analysis for Bolt/Washer with Nutplate/No Washer UPS Side - Bathtub Bracket to Outer Bumper			

Bolt Hole Analysis

Recall loads from bolt calculation

Safety Factors	SFu = **2.000**	*(Ultimate)*	SFy = **1.250**	*(Yield)*
	FF = **1.150**	*(Fitting Factor)*		
Input Loads	V = **489** lbf	*(Shear Load)*	P = **49.800** lbf	*(Axial Load)*
Bolt calc results	Pb = **2019** lbf	*(Max Bolt Load)*		
Dimensions	L = **0.526** in	*(Length of Bolt)*	twh = **0.032** in	*(Thickness of Washer)*

Shear Tear-Out Check

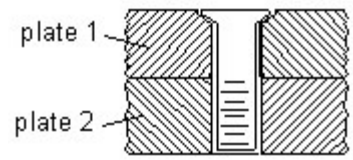

Recall bolt hole dimensions

$tf_1 := tf1$ $\quad tf_1 = \mathbf{0.080}\,in$ *(Entire Thickness of Flange 1)* $\quad Tf1E = \mathbf{0.980}$

$tf_2 := tf2$ $\quad tf_2 = \mathbf{0.100}\,in$ *(Entire Thickness of Flange 2)* $\quad Tf2E = \mathbf{0.960}$

$edge_1 := edge1$ $\quad edge_1 = \mathbf{0.500}\,in$ *(Edge Distance for Hole in Plate 1)*

$edge_2 := edge2$ $\quad edge_2 = \mathbf{0.952}\,in$ *(Edge Distance for Hole in Plate 2)*

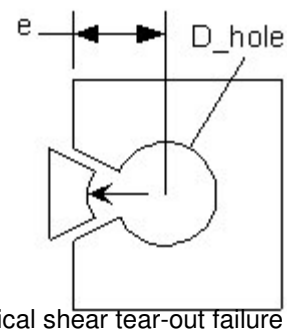

Typical shear tear-out failure

$D = \mathbf{0.190}\,in$ *(Diameter of Bolt)*

$D_shank = \mathbf{0.188}\,in$ *(Min. Shank Diameter of Bolt)*

$D_hole = \mathbf{0.226}\,in$ *(Diameter of Hole)*

Shear area of the mating components (Ref. Analysis & Design of Flight Vehicle Structures, Bruhn, Pg. D1.5)

$$A_{shrpl} := \overrightarrow{\left[2 \cdot tf \cdot \left(edge - \frac{1}{2} D_hole\right)\right]} \qquad \begin{pmatrix} Plate1 \\ Plate2 \end{pmatrix} \qquad A_{shrpl} = \begin{pmatrix} \mathbf{0.062} \\ \mathbf{0.168} \end{pmatrix} in^2$$

Allowables for plates that fastener goes through

$Fsu_1 := Tf1E \cdot \mathbf{27} \cdot ksi$ $\quad Fsu_1 = \mathbf{26.460}\,ksi$ *(Ultimate Shear Allowable for Plate 1)*

$Fsu_2 := Tf2E \cdot \mathbf{36} \cdot ksi$ $\quad Fsu_2 = \mathbf{34.560}\,ksi$ *(Ultimate Shear Allowable for Plate 2)*

$$P_{su} := \overrightarrow{\left(A_{shrpl} \cdot Fsu\right)} \qquad P_{su} = \begin{pmatrix} \mathbf{1638} \\ \mathbf{5799} \end{pmatrix} lbf$$ *(Shear Ultimate Allowable)*

MS for Shear Tear-Out

$$MS_{su} := \overrightarrow{\left(\frac{P_{su}}{V \cdot SFu \cdot FF} - 1\right)} \qquad \begin{pmatrix} Plate1 \\ Plate2 \end{pmatrix} \qquad MS_{su} = \begin{pmatrix} \mathbf{0.46} \\ \mathbf{4.16} \end{pmatrix}$$

$$MS_{bh_1} := \min\left(MS_{su}\right)$$

$MS_{bh_1} = \mathbf{0.457}$ ***... Shear Tear-Out MS***

Bearing Check

Recall bolt hole dimensions

$tf_1 = 0.080\,in$ *(Thickness of Plate 1)*

$tf_2 = 0.100\,in$ *(Thickness of Plate 2)*

$edge_1 = 0.500\,in$ *(Edge Distance for thru Hole in Plate 1)*

$edge_2 = 0.952\,in$ *(Edge Distance for tapped Hole in Plate 2)*

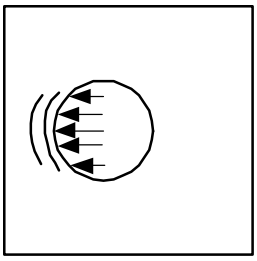

Typical Bearing Failure

$A_{br} := \overrightarrow{(tf \cdot \min(D, D_shank))}$ $\begin{pmatrix} \text{Plate1} \\ \text{Plate2} \end{pmatrix}$ $A_{br} = \begin{pmatrix} 0.015 \\ 0.019 \end{pmatrix} in^2$ *(Bearing Areas)*

$e_D := \frac{\overrightarrow{edge}}{D_hole}$ $e_D = \begin{pmatrix} 2.212 \\ 4.212 \end{pmatrix}$ *(e/D for Plates)*

Allowables for plates that fastener goes through

Bearing strength at e/D = 1.5

$Fbru15_1 := Tf1E \cdot 67 ksi$ $Fbru15_1 = 65.66\,ksi$

$Fbry15_1 := Tf1E \cdot 50 \cdot ksi$ $Fbry15_1 = 49\,ksi$

$Fbru15_2 := Tf2E \cdot 99 ksi$ $Fbru15_2 = 95.04\,ksi$

$Fbry15_2 := Tf2E \cdot 83 \cdot ksi$ $Fbry15_2 = 79.68\,ksi$

Bearing strength at e/D = 2.0

$Fbru20_1 := Tf1E \cdot 88 ksi$ $Fbru20_1 = 86.24\,ksi$

$Fbry20_1 := Tf1E \cdot 58 \cdot ksi$ $Fbry20_1 = 56.840\,ksi$

$Fbru20_2 := Tf2E \cdot 126 ksi$ $Fbru20_2 = 120.96\,ksi$

$Fbry20_2 := Tf2E \cdot 96 \cdot ksi$ $Fbry20_2 = 92.160\,ksi$

Modified bearing strength

$$Fbru_m_1 := if\left[e_D_1 > 2.0, Fbru20_1, if\left[(e_D_1 > 1.5)\cdot(e_D_1 < 2.0), Fbru15_1 + \frac{e_D_1 - 1.5}{2.0 - 1.5}\cdot(Fbru20_1 - Fbru15_1), \left[Fbru15_1\cdot(e_D_1 - 0.5)\right]\right]\right]$$

$$Fbru_m_2 := if\left[e_D_2 > 2.0, Fbru20_2, if\left[(e_D_2 > 1.5)\cdot(e_D_2 < 2.0), Fbru15_2 + \frac{e_D_2 - 1.5}{2.0 - 1.5}\cdot(Fbru20_2 - Fbru15_2), \left[Fbru15_2\cdot(e_D_2 - 0.5)\right]\right]\right]$$

$$Fbry_m_1 := if\left[e_D_1 > 2.0, Fbry20_1, if\left[(e_D_1 > 1.5)\cdot(e_D_1 < 2.0), Fbry15_1 + \frac{e_D_1 - 1.5}{2.0 - 1.5}\cdot(Fbry20_1 - Fbry15_1), \left[Fbry15_1\cdot(e_D_1 - 0.5)\right]\right]\right]$$

$$Fbry_m_2 := if\left[e_D_2 > 2.0, Fbry20_2, if\left[(e_D_2 > 1.5)\cdot(e_D_2 < 2.0), Fbry15_2 + \frac{e_D_2 - 1.5}{2.0 - 1.5}\cdot(Fbry20_2 - Fbry15_2), \left[Fbry15_2\cdot(e_D_2 - 0.5)\right]\right]\right]$$

$Fbru_m = \begin{pmatrix} 86.24 \\ 120.96 \end{pmatrix} \begin{pmatrix} \text{Plate1} \\ \text{Plate2} \end{pmatrix}$ *(Ultimate)*

$Fbry_m = \begin{pmatrix} 56.84 \\ 92.16 \end{pmatrix} \begin{pmatrix} \text{Plate1} \\ \text{Plate2} \end{pmatrix}$ *(Yield)*

$P_{bru} := \overrightarrow{(A_{br} \cdot Fbru_m)}$ $\quad P_{bru} = \begin{pmatrix} 1300 \\ 2280 \end{pmatrix} lbf$ *(Bearing Ultimate Allowable)*

$P_{bry} := \overrightarrow{(A_{br} \cdot Fbry_m)}$ $\quad P_{bry} = \begin{pmatrix} 857 \\ 1737 \end{pmatrix} lbf$ *(Bearing Yield Allowable)*

MS for Bearing Failure

$\mathbf{MS_{bru}} := \overrightarrow{\left(\frac{P_{bru}}{V \cdot SFu \cdot FF} - 1\right)}$ $\quad \mathbf{MS_{bru}} = \begin{pmatrix} 0.156 \\ 1.027 \end{pmatrix}$ $\begin{pmatrix} \text{Plate1} \\ \text{Plate2} \end{pmatrix}$

$MS_{bh_2} := \min(\mathbf{MS_{bru}})$

$MS_{bh_2} = \mathbf{0.156}$ ***... Bearing MS based on Ultimate Strength***

$MS_{bry} := \overrightarrow{\left(\frac{P_{bry}}{V \cdot SFy \cdot FF} - 1\right)}$ $\quad MS_{bry} = \begin{pmatrix} 0.22 \\ 1.47 \end{pmatrix}$ $\begin{pmatrix} \text{Plate1} \\ \text{Plate2} \end{pmatrix}$

$MS_{bh_3} := \min(MS_{bry})$

$MS_{bh_3} = \mathbf{0.219}$ ***... Bearing MS based on Yield Strength***

Prepared By	Name	Date	Engineering and Science Contract Group	File Name
	Kent Peters	07/29/2008		DS UPS Inner Bumper to Standoff B.xmcdz
Checked By	C. Bala		*Structural Analysis Section*	Drawing No. SEG39137852
Title	**Debris Shield Fastener Joint Analysis for Bolt/Washer with Insert Starboard (UPS) - Inner Bumper to Standoff B**			

CHECK

Note: Figure is for reference only.
Not to scale. Actual joint made differ.
Washer may be on nut side, head side, or both

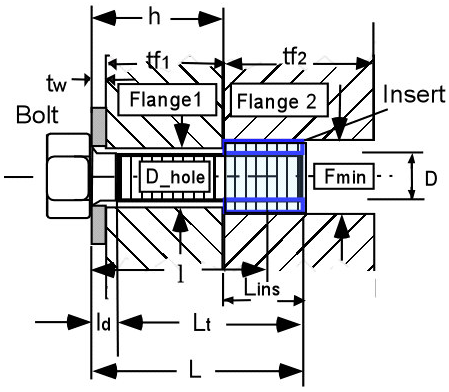

Bolt := **"NAS1004-1, .2500-28, Length, A-286, 140ksi"**

Washer := **"NAS1149E0332R"**

Insert := **"NASM21209F4-20L, .250-28, Assume A-286, Dry Film Lubricant"**

Flange_1 := **"Debris Shield Inner Plate "**
Part_Number_1 := **"SDG39137858-002"**
Material_1 := **"AL ALY2219-T87 "**

Flange_2 := **"Debris Shield Standoff B "**
Part_Number_2 := **"SDG39137855 "**
Material_2 := **"AL ALY 6061-T651 "**

Minimum edge distance of flange 1 edge1 := **1.408**·in

Minimum edge distance of flange 2 edge2 := **0.364**·in

Loads (reference)

Applied tensile load P := **11.7**lbf

Applied shear load V := **25.4**lbf

Applied bending moment M := **0**in·lbf

(Worst case combination)

Factors of Safety (reference)

SFu := **2.00** *(Ultimate)*

SFy := **1.25** *(Yield)*

FF := **1.15** *(Fitting factor)*

SFsep := **1.20** *(Joint Separation)*

Temperature Data (reference)

Assembly Temp_initial := **70**·deg

Temp_max := **140**·deg *(Maximum)*

Temp_min := **–76**·deg *(Minimum)*

Note: these are maximum temperatures that hardware sees / if maximum load occurs at a different temperature this will be conservative

Bolt Data (Bolt = **"NAS1004-1, .2500-28, Length, A-286, 140ksi"**)

Nominal diameter of bolt D := **.2500**·in

Number of threads/inch Nt := **28**·$\frac{1}{in}$

Shank diameter of bolt D_shank := **.2470**·in

Note: if there is a retainer groove in the fastener, this should be the calculated diameter to give an equivalent cross sectional area

Total length of bolt L := **.606**·in

Threaded length Lt := **.544**·in *(If bolt is fully threaded, input Lt = L)*

Bolt head dia. across flats dw := **.398**·in *(dia of pressure boss if it exists, otherwise dia of head)*

Bolt head height bh := **.156**·in *(head height is 0 if bolt is flat head)*

Bolt Data Continued (Bolt = **"NAS1004-1, .2500-28, Length, A-286, 140ksi"**)

Thread data lookup table is hidden
This file uses the data shown in \\escfil02\2i11_mathcad\8307_bolts\Rev_D\thread_data.mcd

Fri Apr 27 14:11:39 2007

Temperature correction factor for bolt strength $TSu_bolt := .98$ $TSy_bolt := .98$

Bolt ultimate tensile allowable stress $Ftu_bolt := 140000 \cdot psi$ $Fty_bolt := 95000 \cdot psi$

Bolt ultimate shear allowable stress $Fsu_bolt := 0.6 \cdot Ftu_bolt$

Temperature correction factor for bolt modulus $TE_bolt := .98$

Modulus of elasticity of bolt $E_bolt := \left(29.1 \cdot 10^{6} \cdot psi\right)$

Thermal coefficients for bolt

$\beta_bolt_hot := 9.1 \cdot 10^{-6} \cdot \frac{\frac{in}{in}}{deg}$ $\beta_bolt_cold := 8.5 \cdot 10^{-6} \cdot \frac{\frac{in}{in}}{deg}$

Washer Data (Washer = **"NAS1149E0332R"**)

Thickness of washers:

head $twh := 0.032 \cdot in$

(these are total washer thickness, if there are more than one)

Diameter of washer under head:

Outer $Dwoh := 0.438 in$

Inner $Dwih := 0.203 \cdot in$

Note: If there is no washer - tw's, Dwo's and Dwi's should be zero

Modulus of elasticity:

head $E_washerh := \left(29.1 \cdot 10^{6} \cdot psi\right)$

Temperature correction factor for modulus:

head $TE_washerh := .98$ *(same as bolt)*

Insert Data (Insert = **"NASM21209F4-20L, .250-28, Assume A-286, Dry Film Lubricant"**)

Length of insert $Lins := 0.500 \cdot in$

Min. external diameter of insert $Fmin := 0.306 \cdot in$

Depth of recess for insert $lr := 0.020 \cdot in$

Temperature correction factor for insert strength $TS_ins := .98$

Ultimate tensile allowable stress $Ftu_ins := 150000 \cdot psi$

Ultimate shear allowable stress $Fsu_ins := 0.6 \cdot Ftu_ins$

Prepared By	Name Kent Peters	Date 07/29/2008	Engineering and Science Contract Group *Structural Analysis Section*	File Name DS UPS Inner Bumper to Standoff B.xmcdz
Checked By	C. Bala			Drawing No. SEG39137852
Title	Debris Shield Fastener Joint Analysis for Bolt/Washer with Insert Starboard (UPS) - Inner Bumper to Standoff B			

Flange Data (Stiffness of the joint depends upon number of members in the grip of the fasteners & their material properties)

Diameter of thru hole $D_hole := 0.272 \cdot in$

Flange_1 = **"Debris Shield Inner Plate "**

Flange_2 = **"Debris Shield Standoff B "**

Material_1 = **"AL ALY2219-T87 "**

Material_2 = **"AL ALY 6061-T651 "**

Thickness of flanges

$tf1 := 0.060 \cdot in$

$tf2 := 0.500 in$ *(Using Length of Insert)*

Compressive Modulus of elasticity

$E_flange1 := (10.8 \cdot 10^6 \cdot psi)$

$E_flange2 := (10.1 \cdot 10^6 \cdot psi)$

Temperature correction factor (modulus)

$Tf1E := .96$

$Tf2E := .98$

Coefficient of thermal expansion for flanges

$\beta_flange1_hot := 12.4 \cdot 10^{-6} \cdot \frac{\frac{in}{in}}{deg}$

$\beta_flange2_hot := 12.8 \cdot 10^{-6} \cdot \frac{\frac{in}{in}}{deg}$

$\beta_flange1_cold := 11.6 \cdot 10^{-6} \cdot \frac{\frac{in}{in}}{deg}$

$\beta_flange2_cold := 12.1 \cdot 10^{-6} \cdot \frac{\frac{in}{in}}{deg}$

(If unavailable, use temperature reduction factor for Ftu)

Shear strength of flange two, with temperature reduction $Fsu_f2 := 27000 \cdot psi$ $Tf2s := .96$

Torque/Preload Data

Maximum torque $Tmax := 84.2 \cdot in \cdot lbf$ *(Shigley's "Mechanical Engineering Design")*

Minimum torque $Tmin := 71.6 in \cdot lbf$

Joint is lubed/dry

Preload Uncertainty $u := 0.25$ *(0.25 lubed/0.35 dry)*

Loading plane factor $n := 0.5$

Torque coefficient $k := 0.15$ *(0.15 lubed/0.20 dry)*

Stiffness and Margin calculations are hidden

This file uses calculations shown in \\escfil02\2i11_mathcad\8307_bolts\Rev_D\bolt_insert_stiffness.mcd

Fri Apr 27 14:11:53 2007

Bolt Load Data

Bolt/joint stiffness factor $= 0.519$

Preload due to temperature $Pthr_pos = 173.3 lbf$

Max. preload $PLDmax = 2980 lbf$

$Pthr_neg = -350.6 lbf$

Min. preload $PLDmin = 941 lbf$

Nom. preload $PLDnom = 2245 lbf$

Uncertainty factor $u = 0.250$

Preload to yield ratio (nom.) $PLDratio = 0.684$

Torque coefficient $k = 0.150$

Joint separation load $Psep = 14.040 lbf$

Loading plane factor $n = 0.500$

Bolt Load Data Continued

Applied Tensile load on the bolt $P = \mathbf{11.700}$ lbf

Applied shear on the bolt $V = \mathbf{25.400}$ lbf

Applied bending on the bolt $M = \mathbf{0.000}$ in·lbf

Max. load on the bolt with preload and Factor of safety

$Pb = \mathbf{2987}$ lbf *(ultimate)*

$Pby = \mathbf{2984}$ lbf *(yield)*

Max. load on the bolt with preload WithOut factor of safety

$Pbapp = \mathbf{2983}$ lbf

Bolt ultimate tensile strength $PAt = \mathbf{4841}$ lbf

Thread pullout strength $PAs = \mathbf{6229}$ lbf

Bolt shear strength $VAu = \mathbf{2680}$ lbf

Bolt bending strength $MAu = \mathbf{134}$ in·lbf

General Checks

length_check = **"Bolt length is sufficient and insert fully engaged"**

cone_check = **"Joint pressure cone does not extend pass flange edge"**

preload_check = **"Nominal preload >= 65% of bolt yield strength"**

washer_check = **"Washer(s) under head do not extend past flange"**

insert_check = **"Flange two is thick enough for insert"**

Summary of Margins for Bolt

Joint separation	$MS_1 = \mathbf{77.73}$	Direct Thread shear Ultimate	$MS_6 = \mathbf{230.49}$
Direct Tension Ultimate	$MS_2 = \mathbf{178.89}$	Total Thread shear Ultimate	$MS_7 = \mathbf{1.09}$
Direct Tension Yield	$MS_3 = \mathbf{194.31}$	Shear Ultimate	$MS_8 = \mathbf{44.88}$
Total Tension Ultimate	$MS_4 = \mathbf{0.62}$	Bending Ultimate	$MS_9 = \mathbf{100}$
Total Tension Yield	$MS_5 = \mathbf{0.1}$	Combined shear, tension and bending ultimate	$MS_{10} = \mathbf{0.62}$

Smallest Margin of Safety for the Bolt, and the Failure Mode

MSbolt = **0.1** Failure_Mode = **"Total Tension Yield"**

Fail-Safe Analysis

Fail-Safe Loads

Applied tensile load $P_FS := 25.2 \cdot lbf$

Applied shear load $V_FS := 57 \cdot lbf$

Applied bending moment $M_FS := 0 \cdot in \cdot lbf$

Fail-Safe Factors of Safety

Ultimate $SFu_FS := 1.0$

Joint Separation $SFsep_FS := 1.0$

Fail Safe Margin calculations are hidden / stiffness & allowable data is not recalculated
This file calculations shown in \\escfil02\2i11_mathcad\8307_bolts\Rev_D\bolt_insert_stiffness__FS.mcd

Fri Apr 27 14:12:08 2007

Bolt Fail-Safe Load Data

Joint separation load $Psep_FS = 25.200\ lbf$

Max. load on the bolt(ultimate) $Pb_FS = 2987.5\ lbf$

Summary of Fail-Safe Margins for Bolt

Joint separation	$MS_FS_1 = 42.86$	Total Thread shear Ultimate	$MS_FS_5 = 1.09$
Direct Tension Ultimate	$MS_FS_2 = 166.04$	Shear Ultimate	$MS_FS_6 = 39.89$
Total Tension Ultimate	$MS_FS_3 = 0.62$	Bending Ultimate	$MS_FS_7 = 10$
Direct Thread shear Ultimate	$MS_FS_4 = 213.96$	Combined shear, tension and bending ultimate	$MS_FS_8 = 0.62$

Smallest Fail-Safe Margin of Safety for the Bolt, and the Failure Mode:

$MSbolt_FS = 0.62$ $Failure_Mode_FS =$ **"Combined Shear Tension Bending Ultimate"**

Prepared By	Name	Date	Engineering and Science Contract Group	File Name
	Kent Peters	07/29/2008		DS UPS Inner Bumper to Standoff B.xmcdz
Checked By	C. Bala		*Structural Analysis Section*	Drawing No. SEG39137852
Title	**Debris Shield Fastener Joint Analysis for Bolt/Washer with Insert Starboard (UPS) - Inner Bumper to Standoff B**			

Bolt Hole Analysis

Recall loads from bolt calculation

Safety Factors	SFu = **2.000**	*(Ultimate)*	SFy = **1.250**	*(Yield)*
	FF = **1.150**	*(Fitting Factor)*		
Input Loads	V = **25.4** lbf	*(Shear Load)*	P = **11.700** lbf	*(Axial Load)*
Bolt calc results	Pb = **2987** lbf	*(Max Bolt Load)*		
Dimensions	L = **0.606** in	*(Length of Bolt)*	twh = **0.032** in	*(Thickness of Washer)*

Shear Tear-Out Check

Recall bolt hole dimensions

$tf_1 := tf1$ $\quad tf_1 = \mathbf{0.060}\,in$ *(Entire Thickness of Flange 1)* $\quad Tf1E = \mathbf{0.960}$

$tf_2 := tf2$ $\quad tf_2 = \mathbf{0.500}\,in$ *(Entire Thickness of Flange 2)* $\quad Tf2E = \mathbf{0.980}$

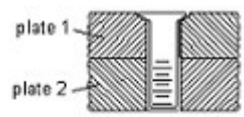

$edge_1 := edge1$ $\quad edge_1 = \mathbf{1.408}\,in$ *(Edge Distance for Hole in Plate 1)*

$edge_2 := edge2$ $\quad edge_2 = \mathbf{0.364}\,in$ *(Edge Distance for Hole in Plate 2)*

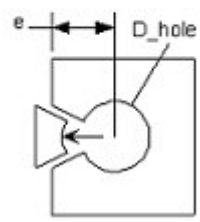

$D = \mathbf{0.250}\,in$ *(Diameter of Bolt)*

$D_shank = \mathbf{0.247}\,in$ *(Min. Shank Diameter of Bolt)*

$D_hole = \mathbf{0.272}\,in$ *(Diameter of Hole)*

Typical shear tear-out failure

Shear area of the mating components (Ref. Analysis & Design of Flight Vehicle Structures, Bruhn, Pg. D1.5)

$$A_{shrpl} := \overrightarrow{\left[2 \cdot tf \cdot \left(edge - \frac{1}{2} D_hole\right)\right]} \qquad \begin{pmatrix} Plate1 \\ Plate2 \end{pmatrix} \qquad A_{shrpl} = \begin{pmatrix} \mathbf{0.153} \\ \mathbf{0.228} \end{pmatrix} in^2$$

Allowables for plates that fastener goes through

$Fsu_1 := Tf1E \cdot \mathbf{36} \cdot ksi$ $\quad Fsu_1 = \mathbf{34.560}\,ksi$ *(Ultimate Shear Allowable for Plate 1)*

$Fsu_2 := Tf2E \cdot \mathbf{27} \cdot ksi$ $\quad Fsu_2 = \mathbf{26.460}\,ksi$ *(Ultimate Shear Allowable for Plate 2)*

$$P_{su} := \overrightarrow{\left(A_{shrpl} \cdot Fsu\right)} \qquad P_{su} = \begin{pmatrix} \mathbf{5275} \\ \mathbf{6033} \end{pmatrix} lbf$$ *(Shear Ultimate Allowable)*

MS for Shear Tear-Out

$$MS_{su} := \overrightarrow{\left(\frac{P_{su}}{V \cdot SFu \cdot FF} - 1\right)} \qquad \begin{pmatrix} Plate1 \\ Plate2 \end{pmatrix} \qquad MS_{su} = \begin{pmatrix} \mathbf{89.3} \\ \mathbf{102.27} \end{pmatrix}$$

$MS_{bh_1} := \min(MS_{su})$

$MS_{bh_1} = \mathbf{89.299}$ ***... Shear Tear-Out MS***

Bearing Check

Recall bolt hole dimensions

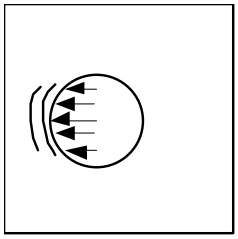

$tf_1 = 0.060\,in$ *(Thickness of Plate 1)*

$tf_2 = 0.500\,in$ *(Thickness of Plate 2)*

$edge_1 = 1.408\,in$ *(Edge Distance for thru Hole in Plate 1)*

$edge_2 = 0.364\,in$ *(Edge Distance for tapped Hole in Plate 2)*

Typical Bearing Failure

$A_{br} := \overrightarrow{(tf \cdot \min(D, D_shank))} \quad \begin{pmatrix} Plate1 \\ Plate2 \end{pmatrix} \quad A_{br} = \begin{pmatrix} 0.015 \\ 0.123 \end{pmatrix} in^2$ *(Bearing Areas)*

$e_D := \frac{\overrightarrow{edge}}{D_hole} \quad e_D = \begin{pmatrix} 5.176 \\ 1.338 \end{pmatrix}$ *(e/D for Plates)*

Allowables for plates that fastener goes through

Bearing strength at e/D = 1.5

$Fbru15_1 := Tf1E \cdot 99ksi \quad Fbru15_1 = 95.04\,ksi$

$Fbry15_1 := Tf1E \cdot 83 \cdot ksi \quad Fbry15_1 = 79.68\,ksi$

$Fbru15_2 := Tf2E \cdot 67ksi \quad Fbru15_2 = 65.66\,ksi$

$Fbry15_2 := Tf2E \cdot 50 \cdot ksi \quad Fbry15_2 = 49\,ksi$

Bearing strength at e/D = 2.0

$Fbru20_1 := Tf1E \cdot 126ksi \quad Fbru20_1 = 120.96\,ksi$

$Fbry20_1 := Tf1E \cdot 96 \cdot ksi \quad Fbry20_1 = 92.160\,ksi$

$Fbru20_2 := Tf2E \cdot 88ksi \quad Fbru20_2 = 86.24\,ksi$

$Fbry20_2 := Tf2E \cdot 58 \cdot ksi \quad Fbry20_2 = 56.840\,ksi$

Modified bearing strength

$$Fbru_m_1 := if\left[e_D_1 > 2.0, Fbru20_1, if\left[(e_D_1 > 1.5)\cdot(e_D_1 < 2.0), Fbru15_1 + \frac{e_D_1 - 1.5}{2.0 - 1.5}\cdot(Fbru20_1 - Fbru15_1), \left[Fbru15_1\cdot(e_D_1 - 0.5)\right]\right]\right]$$

$$Fbru_m_2 := if\left[e_D_2 > 2.0, Fbru20_2, if\left[(e_D_2 > 1.5)\cdot(e_D_2 < 2.0), Fbru15_2 + \frac{e_D_2 - 1.5}{2.0 - 1.5}\cdot(Fbru20_2 - Fbru15_2), \left[Fbru15_2\cdot(e_D_2 - 0.5)\right]\right]\right]$$

$$Fbry_m_1 := if\left[e_D_1 > 2.0, Fbry20_1, if\left[(e_D_1 > 1.5)\cdot(e_D_1 < 2.0), Fbry15_1 + \frac{e_D_1 - 1.5}{2.0 - 1.5}\cdot(Fbry20_1 - Fbry15_1), \left[Fbry15_1\cdot(e_D_1 - 0.5)\right]\right]\right]$$

$$Fbry_m_2 := if\left[e_D_2 > 2.0, Fbry20_2, if\left[(e_D_2 > 1.5)\cdot(e_D_2 < 2.0), Fbry15_2 + \frac{e_D_2 - 1.5}{2.0 - 1.5}\cdot(Fbry20_2 - Fbry15_2), \left[Fbry15_2\cdot(e_D_2 - 0.5)\right]\right]\right]$$

$Fbru_m = \begin{pmatrix} 120.96 \\ 55.039 \end{pmatrix} ksi \quad \begin{pmatrix} Plate1 \\ Plate2 \end{pmatrix}$ *(Ultimate)*

$Fbry_m = \begin{pmatrix} 92.16 \\ 41.074 \end{pmatrix} ksi \quad \begin{pmatrix} Plate1 \\ Plate2 \end{pmatrix}$ *(Yield)*

$P_{bru} := \overrightarrow{(A_{br} \cdot Fbru_m)}$ $\quad P_{bru} = \begin{pmatrix} 1793 \\ 6797 \end{pmatrix} lbf$ *(Bearing Ultimate Allowable)*

$P_{bry} := \overrightarrow{(A_{br} \cdot Fbry_m)}$ $\quad P_{bry} = \begin{pmatrix} 1366 \\ 5073 \end{pmatrix} lbf$ *(Bearing Yield Allowable)*

MS for Bearing Failure

$\mathbf{MS_{bru}} := \overrightarrow{\left(\frac{P_{bru}}{V \cdot SFu \cdot FF} - 1\right)}$ $\quad \mathbf{MS_{bru}} = \begin{pmatrix} 29.685 \\ 115.352 \end{pmatrix}$ $\begin{pmatrix} \text{Plate1} \\ \text{Plate2} \end{pmatrix}$

$MS_{bh_2} := \min(\mathbf{MS_{bru}})$

$MS_{bh_2} = 29.685$ ***... Bearing MS based on Ultimate Strength***

$MS_{bry} := \overrightarrow{\left(\frac{P_{bry}}{V \cdot SFy \cdot FF} - 1\right)}$ $\quad MS_{bry} = \begin{pmatrix} 36.41 \\ 137.93 \end{pmatrix}$ $\begin{pmatrix} \text{Plate1} \\ \text{Plate2} \end{pmatrix}$

$MS_{bh_3} := \min(MS_{bry})$

$MS_{bh_3} = 36.407$ ***... Bearing MS based on Yield Strength***

Prepared By	Name	Date	Engineering and Science Contract Group	File Name
	Kent Peters	08/19/2008		DS UPS Cover to External Bumper.xmcdz
Checked By	C. Bala		*Structural Analysis Section*	Draw ing No. SEG39137852
Title	**Bolt Joint Analysis for Bolt/Washer with Nutplate UPS Side - UPS Cover to Bumper External**			

CHECK

Note: Figure is for reference only.
Not to scale. Actual joint made differ.
Washer may be on nut side, head side, or both

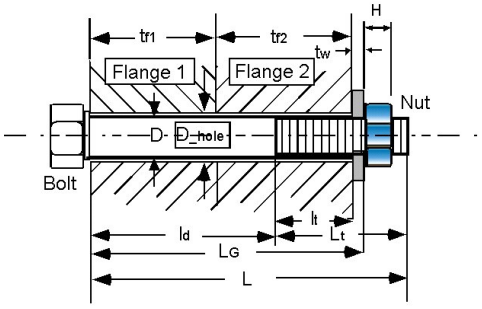

Bolt := **"NAS1133E4, .1900-32, 0.526 L, A-286"**

Washer := **"NAS1149E0332R"**

Nut := **"MS21076L3N"**

Flange_1 := **"Bumper External UPS Cover"**
Part_Number_1 := **"SDG39137846"**
Material_1 := **"AL ALY 2219-T37"**

Flange_2 := **"Bumper External"**
Part_Number_2 := **"SDG39137854"**
Material_2 := **"AL ALY2219-T87"**

Minimum edge distance of flange 1 edge1 := **.325**·in

Minimum edge distance of flange 2 edge2 := **.430**·in

Loads (reference)

Applied tensile load P := **25.9**lbf

Applied shear load V := **41.6**lbf

Applied bending moment M := **0**in·lbf

(Worst case combination)

Factors of Safety (reference)

SFu := **2.00** *(Ultimate)*

SFy := **1.25** *(Yield)*

FF := **1.15** *(Fitting factor)*

SFsep := **1.20** *(Joint Separation)*

Temperature Data (reference)

Assembly Temp_initial := **70**·deg

Temp_max := **140**·deg *(Maximum)*

Temp_min := **−76**·deg *(Minimum)*

Note: these are maximum temperatures that hardware sees / if maximum load occurs at a different temperature this will be conservative

Bolt Data (Bolt = **"NAS1133E4, .1900-32, 0.526 L, A-286"**)

Nominal diameter of bolt D := **.1900**·in

Number of threads/inch Nt := **32**·$\frac{1}{in}$

Shank diameter of bolt D_shank := **.1885**·in

Note: if there is a retainer groove in the fastener, this should be the calculated diameter to give an equivalent cross sectional area

Total length of bolt L := **.526**·in

Threaded length Lt := **.276**·in

(If bolt is fully threaded, input Lt = L)

Bolt head dia. across flats dw := **.357**·in

(dia of pressure boss if it exists, otherwise dia of head)

Bolt head height bh := **.122**·in

(head height is 0 if bolt is flat head)

Bolt Data Continued (Bolt = "NAS1133E4, .1900-32, 0.526 L, A-286")

Fri Apr 27 14:15:35 2007

Thread data lookup table is hidden
This file uses the data shown in \\escfil02\2i11_mathcad\8307_bolts\Rev_D\thread_data.mcd

Temperature correction factor for bolt strength $TSu_bolt := .96$ $TSy_bolt := .96$ *(MMPDS-03, Fig. 6.2.1.1.1.)*

Bolt ultimate tensile allowable stress $Ftu_bolt := 160000 \cdot psi$ $Fty_bolt := 120000 \cdot psi$

Bolt ultimate shear allowable stress $Fsu_bolt := 0.6 \cdot Ftu_bolt$

Temperature correction factor for bolt modulus $TE_bolt := .98$ *(MMPDS-03, Fig. 6.2.1.1.4(a).)*

Modulus of elasticity of bolt $E_bolt := \left(29.1 \cdot 10^{6} \cdot psi\right)$ *(MMPDS-03, Fig. 6.2.1.0(b).)*

Thermal coefficients for bolt

$\beta_bolt_hot := 9.1 \cdot 10^{-6} \cdot \frac{\frac{in}{in}}{deg}$ $\beta_bolt_cold := 8.5 \cdot 10^{-6} \cdot \frac{\frac{in}{in}}{deg}$ *(MMPDS-03, Fig. 6.2.1.0.)*

Washer Data (Washer = "NAS1149E0332R")

Thickness of washers:

head $twh := 0.032 \cdot in$

nut $twn := 0.0 \cdot in$

(these are total washer thickness, if there are more than one)

Diameter of washer under head:

Outer $Dwoh := 0.438 in$

Inner $Dwih := 0.203 \cdot in$

Diameter of washer under nut:

Outer $Dwon := 0.0 in$

Inner $Dwin := 0.0 \cdot in$

Note: If there is no washer - tw's, Dwo's and Dwi's should be zero

Modulus of elasticity:

head $E_washerh := \left(29.1 \cdot 10^{6} \cdot psi\right)$

nut $E_washern := \left(0.0 \cdot 10^{6} \cdot psi\right)$

Temperature correction factor for modulus:

head $TE_washerh := .98$ *(same as bolt)*

nut $TE_washern := 0.0$

Nut Data (Nut = "MS21076L3N")

Height of nut $H := 0.250 \cdot in$

Nut dia. across flats $Dn := 0.290 \cdot in$

Temperature correction factor for nut strength $TS_nut := .96$ *(same as bolt)*

Ultimate allowable stress, tensile $Ftu_nut := 125000 \cdot psi$ $Fsu_nut := 0.6 \cdot Ftu_nut$ *(Shear)*

Ultimate axial strength of nut $Ptu_nut := 2460 \cdot lbf$

Prepared By	Name	Date	Engineering and Science Contract Group	File Name
	Kent Peters	08/19/2008		DS UPS Cover to External Bumper.xmcdz
Checked By	C. Bala		*Structural Analysis Section*	Drawing No. SEG39137852
Title	**Bolt Joint Analysis for Bolt/Washer with Nutplate UPS Side - UPS Cover to Bumper External**			

Flange Data (Stiffness of the joint depends upon number of members in the grip of the fasteners & their material properties)

Diameter of thru hole $D_hole := .213 \cdot in$

Flange_1 = **"Bumper External UPS Cover"** Flange_2 = **"Bumper External"**

Material_1 = **"AL ALY 2219-T37"** Material_2 = **"AL ALY2219-T87"**

Thickness of flanges $tf1 := 0.080 \cdot in$ $tf2 := 0.100 in$

Compressive Modulus of elasticity

$E_flange1 := \left(10.8 \cdot 10^{6} \cdot psi\right)$ $E_flange2 := \left(10.8 \cdot 10^{6} \cdot psi\right)$

Temperature correction factor (modulus)

$Tf1E := .96$ $Tf2E := .96$

Coefficient of thermal expansion for flanges

$\beta_flange1_hot := 12.4 \cdot 10^{-6} \cdot \frac{\frac{in}{in}}{deg}$ $\beta_flange2_hot := 12.4 \cdot 10^{-6} \cdot \frac{\frac{in}{in}}{deg}$

$\beta_flange1_cold := 11.6 \cdot 10^{-6} \cdot \frac{\frac{in}{in}}{deg}$ $\beta_flange2_cold := 11.6 \cdot 10^{-6} \cdot \frac{\frac{in}{in}}{deg}$

Torque/Preload Data

Maximum torque $Tmax := 44.4 \cdot in \cdot lbf$ *(Torque Per SEG39137852)*

Minimum torque $Tmin := 37.8 in \cdot lbf$

Joint is lubed/dry Preload Uncertainty $u := 0.25$ *(0.25 lubed/0.35 dry)* Loading plane factor $n := 0.5$

Torque coefficient $k := 0.15$ *(0.15 lubed/0.20 dry)*

Stiffness and Margin calculations are hidden
This file uses the calculations shown in \\escfil02\2i11_mathcad\8307_bolts\Rev_D\bolt_stiffness_nut.mcd

Fri Apr 27 14:15:49 2007

Bolt Load Data

Bolt/joint stiffness factor	= **0.334**	Preload due to temperature	Pthr_pos = **50.4** lbf
Max. preload	PLDmax = **1998** lbf		Pthr_neg = **−98.8** lbf
Min. preload	PLDmin = **799** lbf		
Nom. preload	PLDnom = **1558** lbf	Uncertainty factor	u = **0.250**
Preload to yield ratio (nom.)	PLDratio = **0.703**	Torque coefficient	k = **0.150**
Joint separation load	Psep = **31.080** lbf	Loading plane factor	n = **0.500**

Bolt Load Data Continued

Applied Tensile load on the bolt $P = \mathbf{25.900}$ lbf

Applied shear on the bolt $V = \mathbf{41.600}$ lbf

Applied bending on the bolt $M = \mathbf{0.000}$ in·lbf

Max. load on the bolt with preload and Factor of safety

$Pb = \mathbf{2008}$ lbf *(ultimate)*

$Pby = \mathbf{2004}$ lbf *(yield)*

Max. load on the bolt with preload WithOut factor of safety

$Pbapp = \mathbf{2003}$ lbf

Bolt ultimate tensile strength $PAt = \mathbf{2957}$ lbf

Thread pullout strength $PAs = \mathbf{2362}$ lbf

Nut ultimate tensile strength $Ptu_nut = \mathbf{2362}$ lbf

Bolt shear strength $VAu = \mathbf{2572}$ lbf

Bolt bending strength $MAu = \mathbf{61}$ in·lbf

General Checks

length_check = **"Bolt length is sufficient and nut fully engaged"**

cone_check = **"Joint pressure cone does not extend pass flange edge"**

preload_check = **"Nominal preload >= 65% of bolt yield strength"**

washer_check = **"Washers under head and nut do not extend past flanges"**

Summary of Margins for Bolt

Joint separation	$MS_1 = \mathbf{25.82}$	Direct Thread shear Ultimate	$MS_6 = \mathbf{38.64}$
Direct Tension Ultimate	$MS_2 = \mathbf{48.63}$	Total Thread shear Ultimate	$MS_7 = \mathbf{0.18}$
Direct Tension Yield	$MS_3 = \mathbf{58.56}$	Shear Ultimate	$MS_8 = \mathbf{25.88}$
Total Tension Ultimate	$MS_4 = \mathbf{0.47}$	Bending Ultimate	$MS_9 = \mathbf{100}$
Total Tension Yield	$MS_5 = \mathbf{0.11}$	Combined shear, tension and bending ultimate	$MS_{10} = \mathbf{0.47}$

Smallest Margin of Safety for the Bolt, and the Failure Mode

MSbolt = **0.11**

Failure_Mode = **"Total Tension Yield"**

Prepared By	Name	Date	Engineering and Science Contract Group	File Name
	Kent Peters	08/19/2008		DS UPS Cover to External Bumper.xmcdz
Checked By	C. Bala		*Structural Analysis Section*	Drawing No. SEG39137852
Title	**Bolt Joint Analysis for Bolt/Washer with Nutplate UPS Side - UPS Cover to Bumper External**			

Fail-Safe Analysis

Fail-safe Loads

Applied tensile load $P_FS := 51.8 \cdot lbf$

Applied shear load $V_FS := 83.2 \cdot lbf$

Applied bending moment $M_FS := 0.0 \cdot in \cdot lbf$

Fail-safe Factors of Safety

Ultimate $SFu_FS := 1.0$

Joint Separation $SFsep_FS := 1.0$

Fail Safe Margin calculations are hidden / stiffness & allowable data is not recalculated
This file uses the calculations shown in \\escfil02\2i11_mathcad\8307_bolts\Rev_D\bolt_stiffness_nut_FS.mcd

Fri Apr 27 14:16:05 2007

Bolt Fail-safe Load data

Joint separation load $Psep_FS = 51.800\ lbf$

Max. load on the bolt(ultimate) $Pb_FS = 2007.7\ lbf$

Summary of fail-safe Margins for bolt:

Joint separation	$MS_FS_1 = 15.09$	Total Thread shear Ultimate	$MS_FS_5 = 0.18$
Direct Tension Ultimate	$MS_FS_2 = 48.63$	Shear Ultimate	$MS_FS_6 = 25.88$
Total Tension Ultimate	$MS_FS_3 = 0.47$	Bending Ultimate	$MS_FS_7 = 10$
Direct Thread shear Ultimate	$MS_FS_4 = 38.64$	Combined shear, tension and bending ultimate	$MS_FS_8 = 0.47$

Smallest fail-safe margin of safety for the bolt, and the failure mode:

$MSbolt_FS = 0.18$

Failure_Mode_FS = **"Total Thread Shear Ultimate (Nut)"**

Prepared By	Name	Date	Engineering and Science Contract Group	File Name
	Kent Peters	08/19/2008		DS UPS Cover to External Bumper.xmcdz
Checked By	C. Bala		*Structural Analysis Section*	Drawing No. SEG39137852
Title	**Bolt Joint Analysis for Bolt/Washer with Nutplate UPS Side - UPS Cover to Bumper External**			

Bolt Hole Analysis

Recall loads from bolt calculation

Safety Factors	SFu = **2.000**	*(Ultimate)*	SFy = **1.250**	*(Yield)*
	FF = **1.150**	*(Fitting Factor)*		
Input Loads	V = **41.6** lbf	*(Shear Load)*	P = **25.900** lbf	*(Axial Load)*
Bolt calc results	Pb = **2008** lbf	*(Max Bolt Load)*		
Dimensions	L = **0.526** in	*(Length of Bolt)*	twh = **0.032** in	*(Thickness of Washer)*

Shear Tear-Out Check

Recall bolt hole dimensions

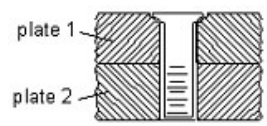

$tf_1 := tf1$ $\quad tf_1 = \mathbf{0.080}\,in$ *(Entire Thickness of Flange 1)* $\quad Tf1E = \mathbf{0.960}$

$tf_2 := tf2$ $\quad tf_2 = \mathbf{0.100}\,in$ *(Entire Thickness of Flange 2)* $\quad Tf2E = \mathbf{0.960}$

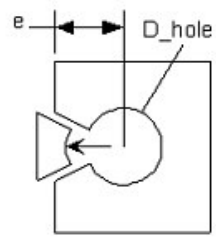

$edge_1 := edge1$ $\quad edge_1 = \mathbf{0.325}\,in$ *(Edge Distance for Hole in Plate 1)*

$edge_2 := edge2$ $\quad edge_2 = \mathbf{0.430}\,in$ *(Edge Distance for Hole in Plate 2)*

D = **0.190** in *(Diameter of Bolt)*

D_shank = **0.188** in *(Min. Shank Diameter of Bolt)*

D_hole = **0.213** in *(Diameter of Hole)*

Typical shear tear-out failure

Shear area of the mating components (Ref. Analysis & Design of Flight Vehicle Structures, Bruhn, Pg. D1.5)

$$A_{shrpl} := \overrightarrow{\left[2 \cdot tf \cdot \left(edge - \frac{1}{2} D_hole\right)\right]} \qquad \begin{pmatrix} Plate1 \\ Plate2 \end{pmatrix} \qquad A_{shrpl} = \begin{pmatrix} \mathbf{0.035} \\ \mathbf{0.065} \end{pmatrix} in^2$$

Allowables for plates that fastener goes through

$Fsu_1 := Tf1E \cdot \mathbf{24.5} \cdot ksi$ $\quad Fsu_1 = \mathbf{23.520}\,ksi$ *(Ultimate Shear Allowable for Plate 1)*

$Fsu_2 := Tf2E \cdot \mathbf{36} \cdot ksi$ $\quad Fsu_2 = \mathbf{34.560}\,ksi$ *(Ultimate Shear Allowable for Plate 2)*

$$P_{su} := \overrightarrow{\left(A_{shrpl} \cdot Fsu\right)} \qquad P_{su} = \begin{pmatrix} \mathbf{822} \\ \mathbf{2236} \end{pmatrix} lbf$$ *(Shear Ultimate Allowable)*

MS for Shear Tear-Out

$$MS_{su} := \overrightarrow{\left(\frac{P_{su}}{V \cdot SFu \cdot FF} - 1\right)} \qquad \begin{pmatrix} Plate1 \\ Plate2 \end{pmatrix} \qquad MS_{su} = \begin{pmatrix} \mathbf{7.59} \\ \mathbf{22.37} \end{pmatrix}$$

$MS_{bh_1} := \min(MS_{su})$ $\quad MS_{bh_1} = \mathbf{7.594}$ ***... Shear Tear-Out MS***

Bearing Check

Recall bolt hole dimensions

$tf_1 = 0.080\,in$ *(Thickness of Plate 1)*

$tf_2 = 0.100\,in$ *(Thickness of Plate 2)*

$edge_1 = 0.325\,in$ *(Edge Distance for thru Hole in Plate 1)*

$edge_2 = 0.430\,in$ *(Edge Distance for tapped Hole in Plate 2)*

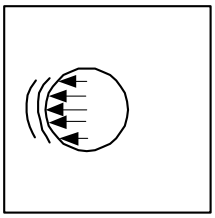

Typical Bearing Failure

$A_{br} := \overrightarrow{(tf \cdot \min(D, D_shank))}$ $\begin{pmatrix} Plate1 \\ Plate2 \end{pmatrix}$ $A_{br} = \begin{pmatrix} 0.015 \\ 0.019 \end{pmatrix} in^2$ *(Bearing Areas)*

$e_D := \frac{\overrightarrow{edge}}{D_hole}$ $e_D = \begin{pmatrix} 1.526 \\ 2.019 \end{pmatrix}$ *(e/D for Plates)*

Allowables for plates that fastener goes through

Bearing strength at e/D = 1.5

$Fbru15_1 := Tf1E \cdot 77ksi$ $Fbru15_1 = 73.92\,ksi$

$Fbry15_1 := Tf1E \cdot 60 \cdot ksi$ $Fbry15_1 = 57.6\,ksi$

$Fbru15_2 := Tf2E \cdot 99ksi$ $Fbru15_2 = 95.04\,ksi$

$Fbry15_2 := Tf2E \cdot 83 \cdot ksi$ $Fbry15_2 = 79.68\,ksi$

Bearing strength at e/D = 2.0

$Fbru20_1 := Tf1E \cdot 98ksi$ $Fbru20_1 = 94.08\,ksi$

$Fbry20_1 := Tf1E \cdot 70 \cdot ksi$ $Fbry20_1 = 67.200\,ksi$

$Fbru20_2 := Tf2E \cdot 126ksi$ $Fbru20_2 = 120.96\,ksi$

$Fbry20_2 := Tf2E \cdot 96 \cdot ksi$ $Fbry20_2 = 92.160\,ksi$

Modified bearing strength

$$Fbru_m_1 := if\left[e_D_1 > 2.0, Fbru20_1, if\left[(e_D_1 > 1.5)\cdot(e_D_1 < 2.0), Fbru15_1 + \frac{e_D_1 - 1.5}{2.0 - 1.5}\cdot(Fbru20_1 - Fbru15_1), \left[Fbru15_1\cdot(e_D_1 - 0.5)\right]\right]\right]$$

$$Fbru_m_2 := if\left[e_D_2 > 2.0, Fbru20_2, if\left[(e_D_2 > 1.5)\cdot(e_D_2 < 2.0), Fbru15_2 + \frac{e_D_2 - 1.5}{2.0 - 1.5}\cdot(Fbru20_2 - Fbru15_2), \left[Fbru15_2\cdot(e_D_2 - 0.5)\right]\right]\right]$$

$$Fbry_m_1 := if\left[e_D_1 > 2.0, Fbry20_1, if\left[(e_D_1 > 1.5)\cdot(e_D_1 < 2.0), Fbry15_1 + \frac{e_D_1 - 1.5}{2.0 - 1.5}\cdot(Fbry20_1 - Fbry15_1), \left[Fbry15_1\cdot(e_D_1 - 0.5)\right]\right]\right]$$

$$Fbry_m_2 := if\left[e_D_2 > 2.0, Fbry20_2, if\left[(e_D_2 > 1.5)\cdot(e_D_2 < 2.0), Fbry15_2 + \frac{e_D_2 - 1.5}{2.0 - 1.5}\cdot(Fbry20_2 - Fbry15_2), \left[Fbry15_2\cdot(e_D_2 - 0.5)\right]\right]\right]$$

$Fbru_m = \begin{pmatrix} 74.961 \\ 120.96 \end{pmatrix} ksi$ $\begin{pmatrix} Plate1 \\ Plate2 \end{pmatrix}$ *(Ultimate)*

$Fbry_m = \begin{pmatrix} 58.096 \\ 92.16 \end{pmatrix} ksi$ $\begin{pmatrix} Plate1 \\ Plate2 \end{pmatrix}$ *(Yield)*

$P_{bru} := \overrightarrow{(A_{br} \cdot Fbru_m)}$ $\quad P_{bru} = \begin{pmatrix} 1130 \\ 2280 \end{pmatrix} lbf$ *(Bearing Ultimate Allowable)*

$P_{bry} := \overrightarrow{(A_{br} \cdot Fbry_m)}$ $\quad P_{bry} = \begin{pmatrix} 876 \\ 1737 \end{pmatrix} lbf$ *(Bearing Yield Allowable)*

MS for Bearing Failure

$\mathbf{MS_{bru}} := \overrightarrow{\left(\frac{P_{bru}}{V \cdot SFu \cdot FF} - 1\right)}$ $\quad \mathbf{MS_{bru}} = \begin{pmatrix} 10.815 \\ 22.830 \end{pmatrix}$ $\begin{pmatrix} \text{Plate1} \\ \text{Plate2} \end{pmatrix}$

$MS_{bh_2} := \min(\mathbf{MS_{bru}})$

$MS_{bh_2} = 10.815$ ***... Bearing MS based on Ultimate Strength***

$MS_{bry} := \overrightarrow{\left(\frac{P_{bry}}{V \cdot SFy \cdot FF} - 1\right)}$ $\quad MS_{bry} = \begin{pmatrix} 13.65 \\ 28.05 \end{pmatrix}$ $\begin{pmatrix} \text{Plate1} \\ \text{Plate2} \end{pmatrix}$

$MS_{bh_3} := \min(MS_{bry})$

$MS_{bh_3} = 13.65$ ***... Bearing MS based on Yield Strength***

Prepared By	Name	Date	Engineering and Science Contract Group	File Name
	Kent Peters	08/19/08		DS UPS Outer Bumper to Standoff B.xmcdz
Checked By	C. Bala		*Structural Analysis Section*	Draw ing No. SEG39137852
Title	Debris Shield Fastener 3 Flange Joint Analysis for Bolt/Washer with Insert Starboard (UPS) - Outer Bumper to Standoff B			

CHECK BOLTS (NAS1004-40 0.25"-28 x 1.0" L Material-A-286), Insert MS21209 F4-20L, Washer NAS1587-4C

Flange (tf1):Starboard External Bumper assy
Part number:SDG39137854-301
Material:2219-T87

Mid Flange (ad2):Debris shield Standoff A assy
Part number:SDG39137848-005
Material:6061-T651

Flange (tf2): Debris shield standoff B
Part number:SDG39137855-001
Material:6061-T651

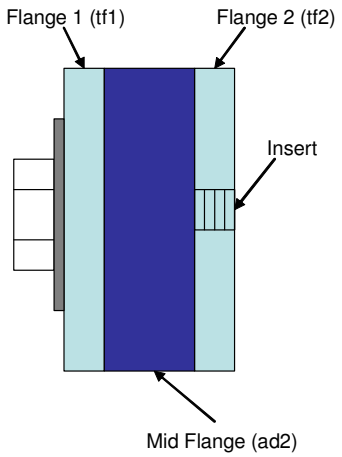

Loads

Applied tensile load $P := 11.7 \cdot lbf$

Applied shear load $V := 25.4 \cdot lbf$

Applied bending moment $M := 38.9 \cdot in \cdot lbf$

Factors of Safety

Ultimate $SFu := 2.0$ Yield $SFy := 1.25$

Joint Separation $SFsep := 1.2$ Fitting factor $FF := 1.15$

Temperature data

Assembly $Temp_initial := 70 \cdot deg$

Maximum $Temp_max := 120 \cdot deg$

Minimum $Temp_min := -200 \cdot deg$

Bolt and Insert Data

Nominal diameter of bolt $D := 0.250 \cdot in$

Number of threads/inch $Nt := 28 \cdot \frac{1}{in}$

Total length of bolt $L := 3.044 \cdot in$

Length of insert $Lins := 0.50 \cdot in$

Threaded length $Lt := 0.544 \cdot in$

Min. external diameter of insert $Fmin := 0.306 \cdot in$

(If bolt is fully threaded, input Lt = L)

Depth of recess for insert $Ir := 0.02 \cdot in$

Tue Feb 15 10:38:17 AM 2005

Washer Data

Thickness of washer $tw := 0.078 \cdot in$

Outer Diameter of washer $Dw := 0.531 in$

Inner Diameter of washer $Dwi := 0.252 \cdot in$

Bolt head dia. across flats $dw := 0.398 \cdot in$

(used only if there is no washer)

Note: If there is no washer, tw, Dw, and Dwi should be zero.

Flange data

Thickness of flange 1 $tf1 := 0.10 \cdot in$

Thickness of flange 2 $tf2 := 0.66 \cdot in$

Thickness of mid flange $tmidflg_ad2 := 2.25 in$

Diameter of hole $D_hole := 0.26 \cdot in$

Outer Diameter of standoff $Dw_ad2 := 0.50 \cdot in$

Inner Diameter of standoff $Dwi_ad2 := 0.272 \cdot in$

Prepared By	Name	Date		File Name
	Kent Peters	08/19/08	Engineering and Science Contract Group	DS UPS Outer Bumper to Standoff B.xmcdz
Checked By	C. Bala		*Structural Analysis Section*	Drawing No. SEG39137852
Title	**Debris Shield Fastener 3 Flange Joint Analysis for Bolt/Washer with Insert Starboard (UPS) - Outer Bumper to Standoff B**			

Material Property Data

Bolt

Temperature correction factor for bolt strength ultimate $TSu_bolt := 0.98$ yield $TSy_bolt := 0.98$

Bolt ultimate tensile allowable stress $Ftu_bolt := 140000 \cdot psi$

Bolt ultimate shear allowable stress $Fsu_bolt := 0.6 \cdot Ftu_bolt$

Bolt yield tensile allowable $Fty_bolt := 95000 \cdot psi$

Temperature correction factor for bolt modulus $TE_bolt := 0.94$

Modulus of elasticity of bolt $E_bolt := \left(29.1 \cdot 10^{6} \cdot psi\right)$

Thermal coefficient for bolt:

$$\beta_bolt_hot := 9.1 \cdot 10^{-6} \cdot \frac{\frac{in}{in}}{deg}$$

$$\beta_bolt_cold := 7.8 \cdot 10^{-6} \cdot \frac{\frac{in}{in}}{deg}$$

Data for bending modulus of Rupture of bolt $fm := Ftu_bolt$ $fo := Fty_bolt$

Section factor for bolt $k1 := 1.7$ (Ref. Bruhn, page C3.3 & fig C3.7)

Insert

Temperature correction factor for insert strength $TS_ins := 0.94$

Ultimate tensile allowable stress $Ftu_ins := 150000 \cdot psi$

Ultimate shear allowable stress $Fsu_ins := 0.6 \cdot Ftu_ins$

Washer

Temperature correction factor for washer modulus $TE_washer := 1.0$

Modulus of elasticity of washer $E_washer := \left(29.1 \cdot 10^{6} \cdot psi\right)$

Flanges

Stiffness of the joint depends upon number of members in the grip of the fasteners, Modulus of elasticity of these members, and diameters of the bolt and the washer.

Temperature correction factor for flange 1 $Tf1E := 1.0$ (modulus) $Tf2s := 0.96$ (strength)

Temperature correction factor for flange 2 $Tf2E := 1.0$ (modulus) $Fsu_f2 := 27000 \cdot psi$

Modulus of elasticity for the parts in the joint $E_flange1 := \left(10.8 \cdot 10^{6} \cdot psi\right)$ $E_flange2 := \left(10.1 \cdot 10^{6} \cdot psi\right)$

Coefficient of thermal expansion for flanges $\beta_flange1_hot := 12.3 \cdot 10^{-6} \cdot \frac{in}{in}$ $\beta_flange2_hot := 12.7 \cdot 10^{-6} \cdot \frac{\frac{in}{in}}{deg}$

$$\beta_flange1_cold := 11.0 \cdot 10^{-6} \cdot \frac{in}{in} \quad \beta_flange2_cold := 11.3 \cdot 10^{-6} \cdot \frac{\frac{in}{in}}{deg}$$

Mid Flange

Temperature correction factor for mid flange modulus $TE_midflg_ad2 := 0.98$

Modulus of elasticity of mid flange $E_midflg_ad2 := (10.1 \cdot 10^{6} \cdot psi)$

Coefficient of thermal expansion for mid flange $\beta_midflg_ad2_hot := 12.7 \cdot 10^{-6} \cdot \frac{\frac{in}{in}}{deg}$ $\beta_midflg_ad2_cold := 11.3 \cdot 10^{-6} \cdot \frac{\frac{in}{in}}{deg}$

Torque/Preload data

Maximum torque (50 % of yield) $Tmax := 65 \cdot in \cdot lbf$ Loading plane factor: $n := 0.5$

Minimum torque (85 % of Max torque) $Tmin := 55 \cdot in \cdot lbf$ Preload Uncertainty: $u := 0.25$

Torque coefficient: $k := 0.15$

Stiffness File for 3 Flange - insert

Bolt Load data

Bolt/joint stiffness factor	= **0.567**	Preload due to temperature	Pthr_pos = **107.8** lbf
Max. preload	PLDmax = **2274.5** lbf		Pthr_neg = **0** lbf
Min. preload	PLDmin = **991.7** lbf	Uncertainty factor	u = **0.25**
Joint separation load	Psep = **14.04** lbf	Torque coefficient	k = **0.15**
Max. load on the bolt(ultimate)	Pb = **2282.1** lbf	Loading plane factor	n = **0.5**
Max. load on the bolt(yield)	Pby = **2279.2** lbf	Thread shear pullout load of bolt or insert	Pths = **83464.8** lbf
Bolt ultimate tensile strength	PAt = **4840.8** lbf	Thread shear pullout load in parent metal	Ppths = **6229.4** lbf

Length_check = **"Bolt length is sufficient"**

Summary of Margins for bolt:

Joint separation	MS_1 = **84.72**	Direct Thread shear Ultimate	MS_6 = **230.49**
Direct Tension Ultimate	MS_2 = **178.89**	Total Thread shear Ultimate	MS_7 = **1.73**
Direct Tension Yield	MS_3 = **194.31**	Shear Ultimate	MS_8 = **44.88**
Total Tension Ultimate	MS_4 = **1.12**	Bending Ultimate	MS_9 = **1.26**
Total Tension Yield	MS_5 = **0.441**	Combined shear, tension and bending ultimate	MS_{10} = **0.094**

Determination of the smallest margin of safety for the bolt, and the failure mode:

$MSbolt := \min(MS)$

MSbolt = **0.094** Failure_Mode = **"Combined Shear Tension Bending Ultimate"**

Fail-safe Analysis

Fail-safe Loads

Applied tensile load $P_FS := 23.4 \cdot lbf$

Applied shear load $V_FS := 50.8 \cdot lbf$

Applied bending moment $M_FS := 77.8 \cdot in \cdot lbf$

Fail-safe Factors of Safety

Ultimate $SFu_FS := 1.0$

Joint Separation $SFsep_FS := 1.0$

Mon Feb 14 12:51:39 2005

Bolt Fail-safe Load data

Joint separation load $Psep_FS = 23.4\ lbf$

Max. load on the bolt(ultimate) $Pb_FS = 2282.1\ lbf$

Summary of fail-safe Margins for bolt:

Joint separation	$MS_FS_1 = 50.43$	Total Thread shear Ultimate	$MS_FS_5 = 1.73$
Direct Tension Ultimate	$MS_FS_2 = 178.89$	Shear Ultimate	$MS_FS_6 = 44.88$
Total Tension Ultimate	$MS_FS_3 = 1.12$	Bending Ultimate	$MS_FS_7 = 1.26$
Direct Thread shear Ultimate	$MS_FS_4 = 230.49$	Combined shear, tension and bending ultimate	$MS_FS_8 = 0.09$

Determination of the smallest fail-safe margin of safety for the bolt, and the failure mode:

$MSbolt_FS := \min(MS_FS)$

$MSbolt_FS = 0.094$ Failure_Mode_FS = **"Combined Shear Tension Bending Ultimate"**

Prepared By	Name	Date		File Name
	Kent Peters	09/04/08	ESC GROUP Engineering and Science Contract Group *Structural Analysis Section*	DS UPS Corner to Bumper.xmcdx
Checked By	C. Bala			Drawing No. SEG39137852
Title	Debris Shield Rivet Analysis Starboard (UPS) Side - Corner Bracket to External Bumper			

Rivet Analysis

Rivet := **"NAS 1398DFC4-3, Rivet Blind, Protruding Head, Locked Spindle, .125 Dia, .126 Grip, .323 L)"**

Flange_1 := **"Debris Shield Corner Bracket"**
Part_Number_1_1 := **"SDG39137849-001"**
Part_Number_1_2 := **"SDG39137849-002"**
Part_Number_1_3 := **"SDG39137849-003"**
Part_Number_1_4 := **"SDG39137849-004"**
Part_Number_1_5 := **"SDG39137849-005"**
Material_1 := **"AL ALY 6061-T651, AMS-QQ-A-250/11"**

Flange_2 := **"Starboard External Bumper Assembly"**
Part_Number_2 := **"SDG39137854"**
Material_2 := **"AL ALY 2219-T87, AMS-QQ-A-250/30"**

Minimum edge distance of flange one edge1 := **.5**·in

Minimum edge distance of flange two edge2 := **.5**·in

Methodology

The Starboard Debris Shield has 5 Corner Brackets SDG39137849 (-001 thru -005) which support the External Bumper. All 5 Corner Brackets are .08 thick AL ALY 6061-T651; use NAS 1398DFC4-3 rivets which go through .125 holes.
Each rivet was modeled in NASTRAN as two spider RBE2s connected by a CBush. 64 Lift Off and 64 Landing load conditions were analyzed using the Integrated Loads FEM.
The worst worst case Axial (P) and Total Shear (V) loads from the CBush's were enveloped for all the rivets, for all 5 Corner Brackets, for all 128 load cases. The worst case P and the worst case V were used together to calculate the tensile and shear margins of safety.
For Fail-Safe Analysis, the worst worst case P and V were doubled and then used together to calculate the tensile and shear fail-safe margins of safety.

Allowables

Rivet Strengths (AL ALY 2017-T4 Sleeve)

Fsu := **494**·lbf *(Minimum Shear Strength)* *(Per Document NAS1400, Table III)*

Ftu := **230**·lbf *(Minimum Tensile Strength)* *(Per Document NAS1400, Table IV)*

Factors of Safety

FSu := **2** *(Ultimate Factor of Safety)*

FSy := **1.25** *(Yield Factor of Safety)*

FF := **1.15** *(Fitting Factor of Safety)*

Temperature Data

Temp_initial := **70**·deg *(Assembly)*

Temp_max := **140**·deg *(Maximum)*

Temp_min := –**76**·deg *(Minimum)*

Note: these are maximum temperatures that hardware sees / if maximum load occurs at a different temperature this will be conservative

Temperature Reduction Factors

Note: For the Debris Shield, the temperature extremes are -76°F to 140°F. These temperature reduction factors are conservative for liftoff/landing conditions.

$\beta_{u1} := \mathbf{0.99}$ *(Ultimate Temperature Reduction Factor)* *(Ref. MMPDS-03, Figure 3.2.3.1.4)*

Allowable Stresses With Temperature Reduction Factor

$F_{su1.a} := \beta_{u1} \cdot Fsu$ $F_{su1.a} = \mathbf{489}\,lbf$ *(Shear Strength Allowable)*

$F_{tu1.a} := \beta_{u1} \cdot Ftu$ $F_{tu1.a} = \mathbf{227.70}\,lbf$ *(Tensile Strength Allowable)*

Loads

$P := \mathbf{33.3}\,lbf$ *(Applied Tensile Load)* *(Worst Case Combination)*

$V := \mathbf{35.3}\,lbf$ *(Applied Shear Load)*

$M := \mathbf{0}\,in \cdot lbf$ *(Applied Bending Moment)*

Margin of Safety

$$MS_{ult} := \frac{F_{tu1.a}}{FSu \cdot FF \cdot P} - \mathbf{1}$$ $MS_{ult} = \mathbf{1.97}$ ***(Tensile Ultimate Margin of Safety)***

$$MS_{shear} := \frac{F_{su1.a}}{FSu \cdot FF \cdot V} - \mathbf{1}$$ $MS_{shear} = \mathbf{5.02}$ ***(Shear Ultimate Margin of Safety)***

Fail-Safe Analysis

Fail-Safe Loads

$P_FS := 2 \cdot P$ *(Applied Tensile Load)*

$P_FS = 66.60\,lbf$

$V_FS := 2 \cdot V$ *(Applied Shear Load)*

$V_FS = 70.60\,lbf$

$M_FS := 0.0 \cdot in \cdot lbf$ *(Applied Bending Moment)*

Fail-Safe Factors of Safety

$SFu_FS := 1.0$ *(Ultimate)*

Fail-Safe Margin of Safety

$$MS_FS_{ult} := \frac{F_{tu1.a}}{SFu_FS \cdot FF \cdot P_FS} - 1$$

$MS_FS_{ult} = 1.97$ ***(Fail-Safe Tensile Ultimate Margin of Safety)***

$$MS_FS_{shear} := \frac{F_{su1.a}}{SFu_FS \cdot FF \cdot V_FS} - 1$$

$MS_FS_{shear} = 5.02$ ***(Fail-Safe Shear Ultimate Margin of Safety)***

5.10.3 TRD Gas Ballistic Cover Assembly and Bolt Analysis

5.10.3.1 TRD Gas Ballistic Cover Assembly Stress Report

5.10.3.1.1 Minimum Margins of Safety

Table 5.10.3.1.1 Parts Minimum Margins of Safety

Dwg/Part Number	Description	Material	Critical Load Condition	Failure Mode	Margin of Safety	Reference Page
SLG39137916-503	TRD Gas Ballistic Cover Outer Skin	AL ALY 6061-T6	Landing	Shear Ultimate	0.50	5.10.3-18
SLG39137916-502	TRD Gas Ballistic Cover Inner Skin	AL ALY 6061-T6	Landing	Tensile Ultimate	5.98	5.10.3-21
SDG39137917-001	TRD Gas Ballistic Cover Standoff Bracket A	AL ALY 7075-T7351	Landing	Shear Ultimate	0.09	5.10.3-24
SDG39137918-001	TRD Gas Ballistic Cover Standoff Bracket B	AL ALY 7075-T7351	Landing	Tensile Ultimate	1.66	5.10.3-28
SDG39137927 SDG39137928 SDG39137929	TRD Gas Ballistic Cover Splice Plates	AL ALY 6061-T651	Landing	Tensile Yield	5.02	5.10.3-58

Table 5.10.3.1.2 Parts Minimum Margins of Safety, Fail-Safe

Dwg/Part Number	Description	Material	Critical Load Condition	Failure Mode	Margin of Safety	Reference Page
SLG39137916-503	TRD Gas Ballistic Cover Outer Skin	AL ALY 6061-T6	Landing	Tensile Yield	0.65	5.10.3-33
SLG39137916-502	TRD Gas Ballistic Cover Inner Skin	AL ALY 6061-T6	Landing	Tensile Yield	5.67	5.10.3-38
SDG39137917-001	TRD Gas Ballistic Cover Standoff Bracket A	AL ALY 7075-T7351	Landing	Tensile Yield	0.006	5.10.3-44
SDG39137918-001	TRD Gas Ballistic Cover Standoff Bracket B	AL ALY 7075-T7351	Landing	Tensile Ultimate	4.02	5.10.3-49
SDG39137927 SDG39137928 SDG39137929	TRD Gas Ballistic Cover Splice Plates	AL ALY 6061-T651	Landing	Tensile Yield	4.15	5.10.3-64

Table 5.10.3.1.3 Fastener Minimum Margins of Safety

Dwg/Part Number	Description	Fastener	Material	Failure Mode	$MS_{nominal}$	Reference Page
SDG39137917-001 SLG39137916-701	Standoff Bracket A to Cover	NAS1351N3LB10 .1900-32	HRES A286	Total Tension Yield	0.95	5.10.3-80
SDG39137918-001 SLG39137916-701	Standoff Bracket B to Cover	NAS1351N3LB10 .1900-32	HRES A286	Total Tension Yield	0.95	5.10.3-91
SDG39137917-001	Standoff Bracket A to Box S	NAS1351N3LB8 .1900-32	HRES A286	Total Tension Yield	0.16	5.10.3-101
SDG39137918-001	Box S to Standoff Bracket B	NAS1351N3LB10 .1900-32	HRES A286	Total Tension Yield	0.14	5.10.3-111
SEG39137926	Splice Plate to Outer Skin	NAS1398BFC6-3	AL	Shear Tear Out	3.73	5.10.3-120

Table 5.10.3.1.4 Fastener Minimum Margins of Safety, Fail-Safe

Dwg/Part Number	Description	Fastener	Material	Failure Mode	$MS_{fail\text{-}safe}$	Reference Page
SDG39137917-001 SLG39137916-701	Standoff Bracket A to Cover	NAS1351N3LB10 .1900-32	HRES A286	Combined Shear Tension Bending Ultimate	1.60	5.10.3-81
SDG39137918-001 SLG39137916-701	Standoff Bracket B to Cover	NAS1351N3LB10 .1900-32	HRES A286	Combined Shear Tension Bending Ultimate	1.60	5.10.3-92
SDG39137917-001	Standoff Bracket A to Box S	NAS1351N3LB8 .1900-32	HRES A286	Total Thread Shear Ultimate	0.41	5.10.3-102
SDG39137918-001	Box S to Standoff Bracket B	NAS1351N3LB10 .1900-32	HRES A286	Combined Shear Tension Bending Ultimate	0.51	5.10.3-112
SEG39137926	Splice Plate to Outer Skin	NAS1398BFC6-3	AL	Shear Ultimate	18.63	5.10.3-118

Notes:

1. Factors of Safety are 2.0 for Ultimate and 1.25 for Yield.
2. Boundary conditions are at four AMS-02 bolts going into Box S.
3. 64 launch load cases, 64 landing load cases were applied.
4. Factors of Safety for Fail-Safe analysis are 1.0 for Ultimate and 1.0 for Yield.

5.10.3.2 Introduction

The TRD Gas Ballistic Cover Assy SEG39137915 provides shielding for the pressurized vessels on AMS-02 Transition Radiation Detector (TRD) tanks (Xenon, CO2 and Mixing) to prevent catastrophic rupture of these tanks in the event of MMOD impact which would release high-velocity fragments creating a potential hazard for the crew, Space Shuttle, and the International Space Station.

5.10.3.2.1 Structural Description

The TRD Gas Ballistic Cover Assembly consists of an AL Inner Skin brazed to an AL DUOCEL foam core. There is an AL Outer Skin that is not directly connected to the Core and Inner Skin. Rather, both the Inner Skin/Core and Outer Skin attach to the same Standoff Brackets. Figure 5.10.3.2-1 shows two side views of the Ballistic Cover Assembly.

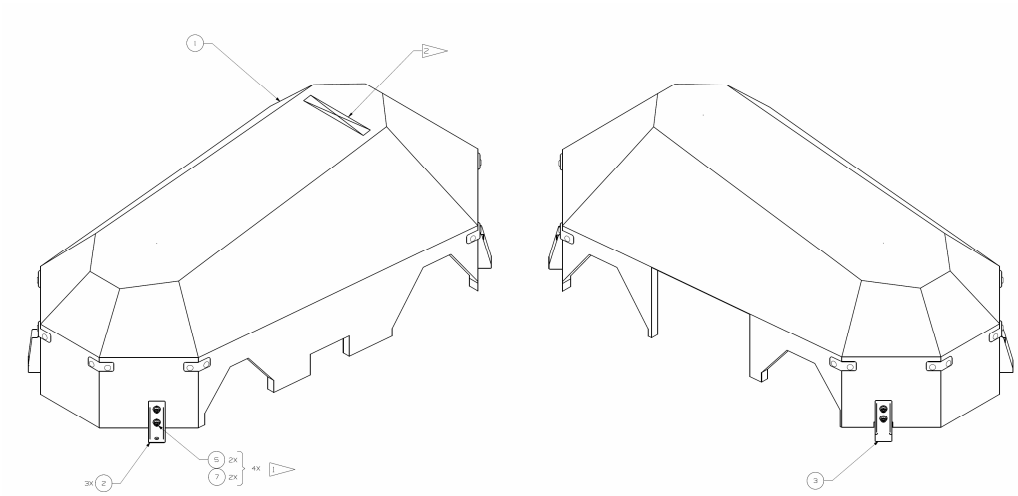

Figure 5.10.3.2-1 DWG SEG39137915, TRD Gas Ballistic Cover Assy

The Outer Skin is formed out of folded sheet metal, starting at the top of the cover and folding the cut sides down. The adjacent free edges that constitute the seams, see red lines in Figure 5.10.3.2-2, are tack welded but are considered nonstructural. Eight Splice Plates hold the adjacent free edges in the Outer Skin together to ensure structural integrity.

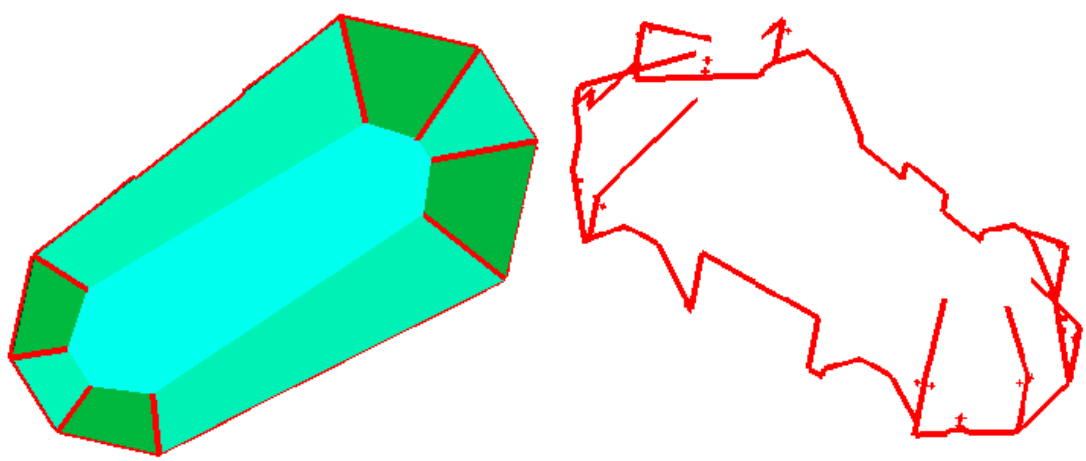

Figure 5.10.3.2-2 Outer Skin Adjacent Free Edge Seams (shown in red)

Each Standoff Bracket attaches to the Ballistic Cover by (2) NAS 1351N3LB10 fasteners with NAS 1587A3C washers, going into SOS-032-16 Self Clinching Standoffs in the TRD Gas Ballistic Cover.

The TRD Gas Ballistic Cover, SLG39137915, Figure 5.10.3.2-1, is attached to Box S with (3) Standoff Bracket A, SDG39137917-001, and (1) Standoff Bracket B, SDG39137918-301,Figure 5.10.3.2-3. Standoff Bracket A attaches to Box S with one NAS1351N3LB8 .1900-32 fastener. Standoff Bracket B attaches to Box S with one NAS1351N3LB10 .1900-32 fastener. All 4 brackets are AL ALY 7075-T7351.

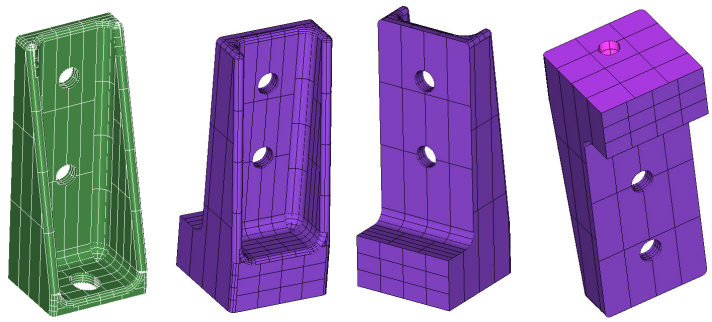

Figure 5.10.3.2-3 TRD Gas Ballistic Cover Standoff Bracket A (green) and Standoff Bracket B

5.10.3.2.2 Load Conditions

The stand-alone math model of the TRD Gas Ballistic Cover Assembly described in the previous sections was used to assess the structure for the Shuttle flight loads. An initial assessment was made using the secondary structure load factors provided in Table 5.10.3.2.1 Launch/Landing Design Limit Load Factors for Small Secondary Structures, of the AMS-02 Structural Verification Plan (JSC-28792, Rev. E). However, these loads are very conservative and the results of the analysis showed that the structural margins were unacceptable. The load factors are provided in Table 5.10.3.2.1 Launch/Landing Design Limit Load Factors for Small Secondary Structures for reference.

Table 5.10.3.2.1 Launch/Landing Design Limit Load Factors for Small Secondary Structures

Weight (pounds)	Load Factor (g)
<20	40
20-50	31
50-100	22
100-200	17
200-500	13

To reduce the conservatism for the flight loads assessment, the TRD Gas Ballistic Cover Assembly math model was integrated with the math model of the full AMS-02 payload. The liftoff and landing load factors from the AMS-02 design coupled loads analysis (as specified in Table 5-2 of the AMS-02 SVP) were applied to the integrated math model. These loads are provided in Table 5.10.3.2.2 Second DCLA Liftoff and Landing Load Factors for reference.

Table 5.10.3.2.2 Second DCLA Liftoff and Landing Load Factors

Event	Nx	Ny	Nz	Rx	Ry	Rz
Liftoff	-3.7 / 0.4	-1.4 / 1.6	-1.4 / 1.5	-4.5 / 4.1	-8.4 / 11.0	-3.9 / 4.1
Abort Landing	-1.2 / 1.3	-0.7 / 0.6	-2.1 / 5.6	-5.2 / 4.7	-10.7 / 13.9	-6.0 / 4.8

Static loads analyses were performed using NASTRAN with 64 subcases representing all combinations of the liftoff load factors and 64 subcases representing all combinations of the landing load factors. Loads, stresses, and other structural responses were recovered from this integrated analysis for the TRD Gas Ballistic Cover Assembly and used to compute the structural strength and Margins of Safety.

5.10.3.2.3 Factors of Safety

The hardware is designed with an Ultimate Factor of Safety of 2.0 and a Yield Factor of Safety of 1.25 against limit loads per *JSC-28792, Rev. D Alpha Magnetic Spectrometer -02 Structural Verification Plan for the Space Transportation System and the International Space Station*.

5.10.3.2.4 Materials and Temperature

5.10.3.2.4.1 Table of Material Allowables

The materials, and their allowables, used in the TRD Gas Ballistic Cover Assembly are shown in Table 5.10.3.2.3 Material Allowables.

Table 5.10.3.2.3 Material Allowables

Dwg/Part Number	Description	Material	Allowables
SLG39137916-501	TRD Gas Ballistic Cover Core	DUOCEL AL Foam 6101-T6, 10 PPI, 6-8% Relative Density	At 0.410in thick, the Core is treated as non-structural mass
SLG39137916-502	TRD Gas Ballistic Cover Inner Skin	AL ALY 6061-T6 SAE-AMS-4027	F_{tu} = 42000 psi F_{ty} = 36000 psi F_{su} = 27000 psi
SLG39137916-503	TRD Gas Ballistic Cover Outer Skin	AL ALY 6061-T6 SAE-AMS-4027	F_{tu} = 42000 psi F_{ty} = 36000 psi F_{su} = 27000 psi
SDG39137917-001	TRD Gas Ballistic Cover Standoff Bracket A	AL ALY 7075-T7351 AMS-QQ-A-250/12	F_{tu} = 68000 psi F_{ty} = 57000 psi F_{su} = 38000 psi
SDG39137918-001	TRD Gas Ballistic Cover Standoff Bracket B	AL ALY 7075-T7351 AMS-QQ-A-250/12	F_{tu} = 68000 psi F_{ty} = 57000 psi F_{su} = 38000 psi
SDG39137927-001	TRD Gas Ballistic Cover Splice Plate A	AL ALY 6061-T651 AMS-QQ-A-250/11	F_{tu} = 42000 psi F_{ty} = 36000 psi F_{su} = 27000 psi
SDG39137928-001	TRD Gas Ballistic Cover Splice Plate A	AL ALY 6061-T651 AMS-QQ-A-250/11	F_{tu} = 42000 psi F_{ty} = 36000 psi F_{su} = 27000 psi
SDG39137929-001	TRD Gas Ballistic Cover Splice Plate A	AL ALY 6061-T651 AMS-QQ-A-250/11	F_{tu} = 42000 psi F_{ty} = 36000 psi F_{su} = 27000 psi

5.10.3.2.4.2 Temperature Degradation

The temperature extremes are -76°F to 140°F.

5.10.3.3 Description of the TRD Gas Ballistic Cover Assy FEM

FEMAP modeling software was used to generate a finite element model of the TRD Gas Ballistic Cover Assembly for structural analysis using NASTRAN.

1. The geometry of each part was identified by a CAD model (Parasolid format) that was provided by the design group. This geometry was used as the basis for generating the finite element mesh.
2. The Core, Inner Skin, Outer Skin, and Standoff Bracket A are modeled using plate elements (CQUAD4 and CTRIA3).
3. The Core and Inner Skin are represented as Ply2 and Ply1 respectively in a composite (PCOMP).
4. Standoff Bracket B is modeled with solid elements (CTETRA).
5. The Standoff Bracket A to Cover and the Standoff Bracket B to Cover fasteners are represented by CBUSH elements with stiffness values for the three translation directions that represent axial and shear stiffness.
6. The TRD Gas Ballistic Cover model is integrated with the USS model.
7. MSC/NASTRAN v.2005 is used as a solver for analyzing the math model.
8. NASPOST is used to sort the maximum absolute value of Principal, Von-Mises, and Shear, for Composite Ply stresses, CQUAD4 stresses, and CTETRA stresses; and the maximum absolute value of axial and shear for CBUSH forces.

5.10.3.3.1 Description of the TRD Gas Ballistic Cover Assy FEM

The FEM of the TRD Gas Ballistic Cover assembly was attached to the integrated loads model at the 4 attachment points to Box S. The attachments between the Standoff Brackets and the TRD Gas Ballistic Cover are represented by Spider RBE3's (with the center dependent node given 6 DOF T1 T2 T3 R1 R2 R3, and the outer independent nodes given T1 T2 T3) in the fastener holes of each flange, connected by CBUSH elements. The fastener loads between the Standoff Brackets and Cover are recovered as CBUSH Forces.

```
Model Element Summary
There are  16 L_BEAM elements
There are  12 L_SPRING elements
There are  59958 L_PLATE elements
There are  56697 L_LAMINATE_PLATE elements
There are  9648 P_SOLID elements
There are  36 L_RIGID elements
```

The largest absolute CBUSH Axial (P) load and the largest absolute CBUSH Total Shear (V) load, are enveloped across all 4 Standoff Brackets, for all load cases, and then used to calculate the Margins of Safety for the joints.

For Fail-Safe Analysis, two separate scenarios were analyzed. The first scenario assumed one of the Outer Skin Splice Plates failed (was removed). The second assumed one of the Standoff Bracket to Box S attachments failed. Both scenarios were run for all Landing and Liftoff conditions. The worst case Axial and Total Shear loads were then used to calculate the Fail-Safe Margins of Safety for the joints.

5.10.3.3.2 Description of the Integrated TRD Gas Ballistic Cover Assy and Full Payload FEM

The high-fidelity finite element model of the TRD Gas Ballistic Cover Assembly was integrated with the finite element model of the full payload. The full model consisted of the standard 2-07 loads model components plus high-fidelity models of Interface Panel A, the Starboard debris shield, and the outer Port debris shield for the TRD Gas Supply. The math model of the USS was modified to provide attachment points for these high-fidelity stress models.

The detailed stress-model of the TRD Gas Ballistic Cover Assembly was attached to the base plate of the TRD Gas Supply (Box S) using CBUSH elements. Views of the full payload math model are shown below with various depictions of the debris shield.

A summary from NASTRAN of the finite elements comprising the model is provided below.

```
FEBRUARY  11, 2009  MSC.NASTRAN  6/17/05   PAGE     4

                M O D E L   S U M M A R Y

          NUMBER OF GRID      POINTS    =   248358

          NUMBER OF CBAR      ELEMENTS =     22421
          NUMBER OF CBEAM     ELEMENTS =     15158
          NUMBER OF CBUSH     ELEMENTS =      3023
          NUMBER OF CHEXA     ELEMENTS =      1640
          NUMBER OF CONM2     ELEMENTS =      1619
          NUMBER OF CPENTA    ELEMENTS =       376
          NUMBER OF CQUAD4    ELEMENTS =    191405
          NUMBER OF CROD      ELEMENTS =        42
          NUMBER OF CTETRA    ELEMENTS =      9864
          NUMBER OF CTRIA3    ELEMENTS =     15241

          NUMBER OF RBE2      ELEMENTS =     11474
          NUMBER OF RBE3      ELEMENTS =       210
```

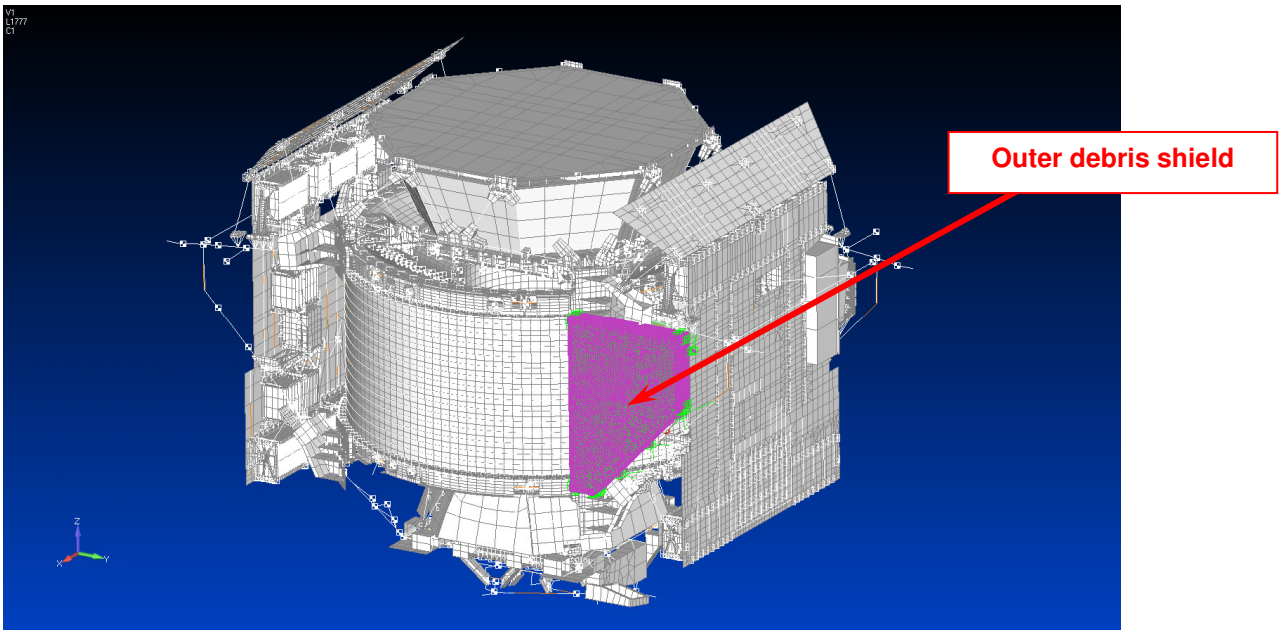

Figure 5.10.3.3-1 View of full payload showing Port debris shield covering outer side of TRD Gas Supply

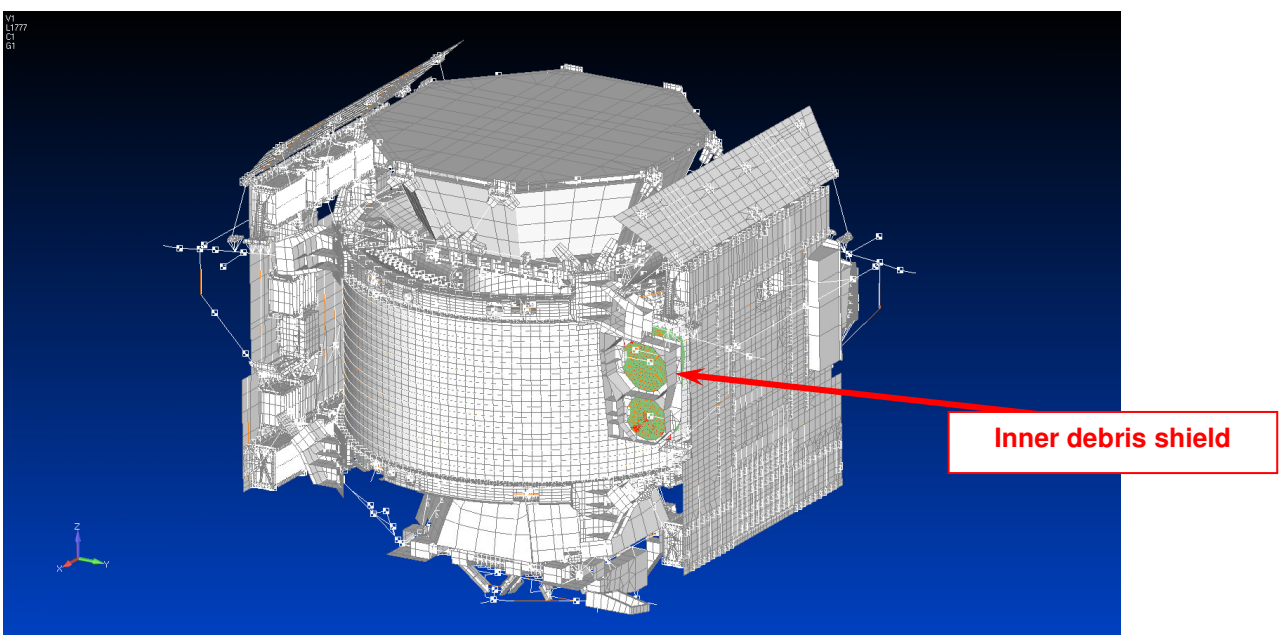

Figure 5.10.3.3-2 View of full payload with Port debris shield covering outer side of TRD Gas Supply removed for clarity

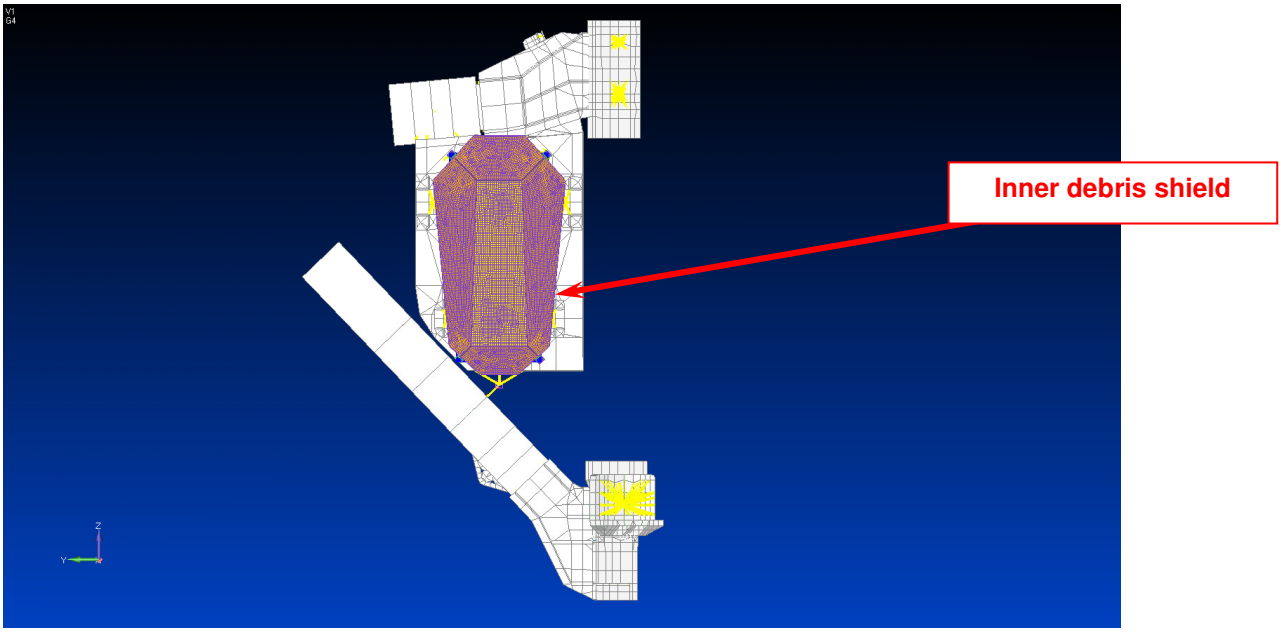

Figure 5.10.3.3-3 Isolated View of TRD Gas Ballistic Cover Assembly for the TRD Gas Supply (surrounding structure removed for clarity)

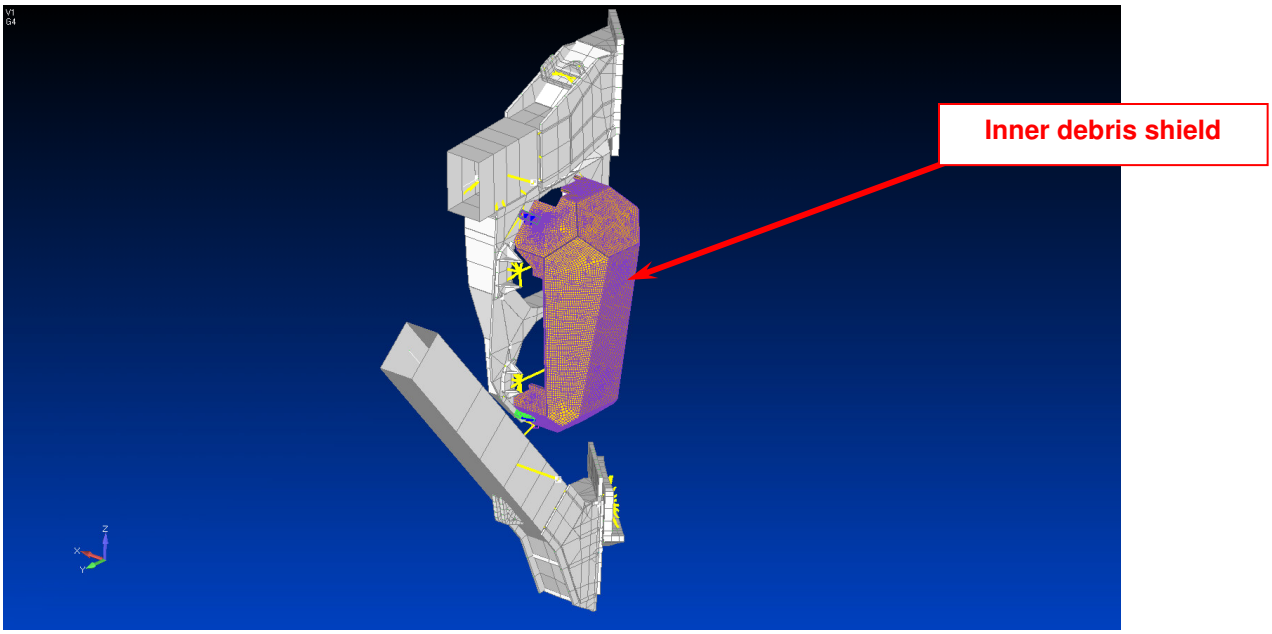

Figure 5.10.3.3-4 Isolated View of TRD Gas Ballistic Cover Assembly for the TRD Gas Supply (surrounding structure removed for clarity)

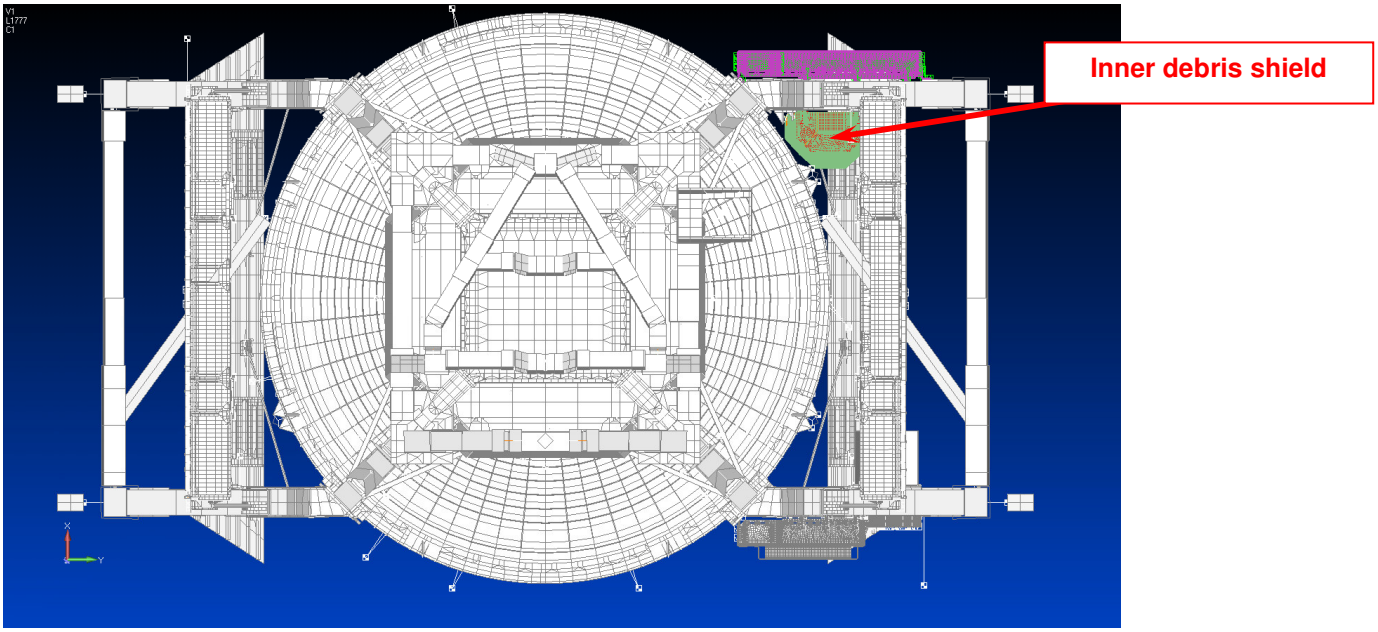

Figure 5.10.3.3-5 View of payload from bottom showing location of TRD Gas Ballistic Cover Assembly

5.10.3.3.3 Checks for the Integrated TRD Gas Ballistic Cover Assy and Full Payload FEM

5.10.3.3.3.1 Constrained

Constraint and Grounding Checks

Constraint and grounding checks were performed using MSC NASTRAN. The results of these checks are shown below for the unconstrained and constrained models. The model passes the checks at all degree-of-freedom set levels with sufficiently low strain energy to indicate that there are no unintended constraints or grounding issues.

```
$ ripcheck.out ds-trd-gas-inner-modes-20.f06 ds-trd-gas-inner-modes-20.txt
$ cat ds-trd-gas-inner-modes-20.txt
RESULTS OF RIGID BODY CHECKS OF MATRIX KGG      (G-SET)  FOLLOW:
      DIRECTION        STRAIN ENERGY        PASS/FAIL
      ---------        -------------        ---------
        1               1.417700E-06          PASS
        2               9.929751E-07          PASS
        3               3.302385E-06          PASS
        4               4.672384E-03          PASS
        5               2.317326E-03          PASS
        6               1.930375E-04          PASS
RESULTS OF RIGID BODY CHECKS OF MATRIX KNN      (N-SET)  FOLLOW:
      DIRECTION        STRAIN ENERGY        PASS/FAIL
      ---------        -------------        ---------
        1               7.619799E-07          PASS
        2               8.710456E-07          PASS
        3               2.812508E-06          PASS
        4               3.500685E-03          PASS
        5               2.335165E-03          PASS
        6               2.201617E-03          PASS
RESULTS OF RIGID BODY CHECKS OF MATRIX KFF      (F-SET)  FOLLOW:
      DIRECTION        STRAIN ENERGY        PASS/FAIL
      ---------        -------------        ---------
        1               6.412554E+06          FAIL
        2               1.104724E+06          FAIL
        3               1.282511E+07          FAIL
        4               1.207519E+11          FAIL
        5               2.475778E+10          FAIL
        6               5.753186E+10          FAIL
RESULTS OF RIGID BODY CHECKS OF MATRIX KAA1     (A-SET)  FOLLOW:
      DIRECTION        STRAIN ENERGY        PASS/FAIL
      ---------        -------------        ---------
        1               6.412554E+06          FAIL
        2               1.104724E+06          FAIL
        3               1.282511E+07          FAIL
        4               1.207519E+11          FAIL
        5               2.475778E+10          FAIL
        6               5.753186E+10          FAIL
```

Mass Properties Check

The weight of the integrated system math model is 15190 pounds. This is a conservative (slightly greater than the budget) weight for analysis purposes and can not be verified at the present time because assembly of the payload flight article is not complete. The mass properties for the integrated math model are shown below as computed by NASTRAN.

```
                    O U T P U T   F R O M   W E I G H T   C H E C K
                              DEGREES OF FREEDOM SET = G
                              REFERENCE POINT =   999999
                                         M O
*  3.911365E+01 -8.326673E-17  0.000000E+00 -1.332268E-15 -1.824920E+00  5.990389E+00 *
* -8.326673E-17  3.911365E+01  6.938894E-18  1.824920E+00  7.771561E-16  6.493510E+00 *
*  0.000000E+00  6.938894E-18  3.911365E+01 -5.990389E+00 -6.493510E+00  1.332268E-15 *
* -1.332268E-15  1.824920E+00 -5.990389E+00  1.045293E+05  6.052981E+02 -1.510668E+02 *
* -1.824920E+00  7.771561E-16 -6.493510E+00  6.052981E+02  7.062857E+04 -6.084945E+02 *
*  5.990389E+00  6.493510E+00  1.332268E-15 -1.510668E+02 -6.084945E+02  9.158235E+04 *
                                          S
                    *  1.000000E+00  0.000000E+00  0.000000E+00 *
                    *  0.000000E+00  1.000000E+00  0.000000E+00 *
                    *  0.000000E+00  0.000000E+00  1.000000E+00 *
         DIRECTION
    MASS AXIS SYSTEM (S)     MASS              X-C.G.        Y-C.G.        Z-C.G.
            X            3.911365E+01     -3.406145E-17 -1.531534E-01 -4.665685E-02
            Y            3.911365E+01      1.660165E-01  1.986918E-17 -4.665685E-02
            Z            3.911365E+01      1.660165E-01 -1.531534E-01  3.406145E-17
                                         I(S)
                    *  1.045283E+05 -6.043036E+02  1.513697E+02 *
                    * -6.043036E+02  7.062741E+04  6.082150E+02 *
                    *  1.513697E+02  6.082150E+02  9.158036E+04 *
                                         I(Q)
                    *  7.059917E+04                             *
                    *                9.159580E+04               *
                    *                                1.045411E+05 *
                                          Q
                    *  1.767301E-02 -1.303594E-02  9.997588E-01 *
                    * -9.994277E-01  2.861625E-02  1.804029E-02 *
                    * -2.884452E-02 -9.995055E-01 -1.252274E-02 *
                    O U T P U T   F R O M   W E I G H T   C H E C K
                              DEGREES OF FREEDOM SET = N
                              REFERENCE POINT =   999999
                                         M O
*  3.911365E+01 -1.873501E-16  5.273559E-16 -2.664535E-15 -1.824920E+00  5.990389E+00 *
* -1.873501E-16  3.911365E+01  2.723516E-16  1.824920E+00  1.776357E-15  6.493510E+00 *
*  5.273559E-16  2.723516E-16  3.911365E+01 -5.990389E+00 -6.493510E+00  5.440093E-15 *
* -2.664535E-15  1.824920E+00 -5.990389E+00  1.045405E+05  6.052981E+02 -1.510668E+02 *
* -1.824920E+00  1.776357E-15 -6.493510E+00  6.052981E+02  7.064023E+04 -6.084945E+02 *
*  5.990389E+00  6.493510E+00  5.440093E-15 -1.510668E+02 -6.084945E+02  9.159241E+04 *

               CHANGE WITH RESPECT TO G-SET RIGID BODY MASS/WEIGHT
*       0 %                                                                           *
*                    0 %                                                              *
*                                  0 %                                                *
*                                                 0 %                                 *
*                                                              0 %                    *
*                                                                           0 %       *


MODES OF FULL SYSTEM WITH TRD GAS-SUPPLY DEBRIS SHIELD  FEBRUARY 9, 2009  MSC.NASTRAN  6/17/05  PAGE 26

                    O U T P U T   F R O M   W E I G H T   C H E C K
                              DEGREES OF FREEDOM SET = F
                              REFERENCE POINT =   999999
                                         M O
*  3.909575E+01 -1.873501E-16  5.273559E-16 -2.664535E-15 -2.320257E+00  5.934992E+00 *
* -1.873501E-16  3.910252E+01  2.723516E-16  9.191499E-01  1.776357E-15  6.794929E+00 *
*  5.273559E-16  2.723516E-16  3.907785E+01 -5.879596E+00 -6.476616E+00  5.440093E-15 *
                    O U T P U T   F R O M   W E I G H T   C H E C K
                              DEGREES OF FREEDOM SET = A
                              REFERENCE POINT =   999999
                                         M O
*  3.909575E+01 -1.873501E-16  5.273559E-16 -2.664535E-15 -2.320257E+00  5.934992E+00 *
* -1.873501E-16  3.910252E+01  2.723516E-16  9.191499E-01  1.776357E-15  6.794929E+00 *
*  5.273559E-16  2.723516E-16  3.907785E+01 -5.879596E+00 -6.476616E+00  5.440093E-15 *
* -2.664535E-15  9.191499E-01 -5.879596E+00  1.041502E+05  6.052458E+02 -1.265538E+02 *
* -2.320257E+00  1.776357E-15 -6.476616E+00  6.052458E+02  7.057113E+04 -6.100276E+02 *
*  5.934992E+00  6.794929E+00  5.440093E-15 -1.265538E+02 -6.100276E+02  9.142592E+04 *

               CHANGE WITH RESPECT TO G-SET RIGID BODY MASS/WEIGHT
*       0 %                                                                           *
*                    0 %                                                              *
*                                  0 %                                                *
*                                                 0 %                                 *
*                                                              0 %                    *
*                                                                           0 %       *
```

Modal Check

A model analysis was performed using NASTRAN to determine the modal frequencies of the constrained system to verify that there are no mechanisms or other unexpected low-frequency modes. A modal analysis of the unconstrained system was also performed to confirm that the model has appropriate rigid-

body modes. Lists of the modes for the unconstrained and constrained configurations are provided on the next two pages.

Excerpt from the NASTRAN f06 file showing the modal frequencies for the constrained system model:

```
MODES OF FULL SYSTEM WITH TRD GAS-SUPPLY DEBRIS SHIELD  FEBRUARY 9, 2009  MSC.NASTRAN  6/17/05  PAGE 286
                                                  R E A L   E I G E N V A L U E S
MODE EXTRACTION EIGENVALUE      RADIANS         CYCLES          GENERALIZED     GENERALIZED
NO.  ORDER                                                      MASS            STIFFNESS
    1     1     5.690311E+02    2.385437E+01    3.796541E+00    1.000000E+00    5.690311E+02
    2     2     6.832161E+02    2.613840E+01    4.160056E+00    1.000000E+00    6.832161E+02
    3     3     6.895743E+02    2.625975E+01    4.179368E+00    1.000000E+00    6.895743E+02
    4     4     1.003018E+03    3.167046E+01    5.040510E+00    1.000000E+00    1.003018E+03
    5     5     1.174660E+03    3.427332E+01    5.454767E+00    1.000000E+00    1.174660E+03
    6     6     1.600173E+03    4.000216E+01    6.366542E+00    1.000000E+00    1.600173E+03
    7     7     3.575692E+03    5.979709E+01    9.517002E+00    1.000000E+00    3.575692E+03
    8     8     5.337512E+03    7.305827E+01    1.162759E+01    1.000000E+00    5.337512E+03
    9     9     5.632689E+03    7.505124E+01    1.194478E+01    1.000000E+00    5.632689E+03
   10    10     6.464812E+03    8.040405E+01    1.279670E+01    1.000000E+00    6.464812E+03
```

5.10.3.3.3.2 Free-Free

Constraint and Grounding Check

```
$ ripcheck.out check-model-free-20.f06 check-model-free-20.txt
$ cat check-model-free-20.txt
RESULTS OF RIGID BODY CHECKS OF MATRIX KGG      (G-SET)  FOLLOW:
      DIRECTION        STRAIN ENERGY        PASS/FAIL
      ---------        -------------        ---------
        1               1.417700E-06          PASS
        2               9.929751E-07          PASS
        3               3.302385E-06          PASS
        4               4.672384E-03          PASS
        5               2.317326E-03          PASS
        6               1.930375E-04          PASS
RESULTS OF RIGID BODY CHECKS OF MATRIX KNN      (N-SET)  FOLLOW:
      DIRECTION        STRAIN ENERGY        PASS/FAIL
      ---------        -------------        ---------
        1               7.619799E-07          PASS
        2               8.710456E-07          PASS
        3               2.812508E-06          PASS
        4               3.500685E-03          PASS
        5               2.335165E-03          PASS
        6               2.201617E-03          PASS
RESULTS OF RIGID BODY CHECKS OF MATRIX KFF      (F-SET)  FOLLOW:
      DIRECTION        STRAIN ENERGY        PASS/FAIL
      ---------        -------------        ---------
        1               7.619799E-07          PASS
        2               8.710456E-07          PASS
        3               2.812508E-06          PASS
        4               3.500685E-03          PASS
        5               2.335165E-03          PASS
        6               2.201617E-03          PASS
RESULTS OF RIGID BODY CHECKS OF MATRIX KAA1     (A-SET)  FOLLOW:
      DIRECTION        STRAIN ENERGY        PASS/FAIL
      ---------        -------------        ---------
        1               7.619799E-07          PASS
        2               8.710456E-07          PASS
        3               2.812508E-06          PASS
        4               3.500685E-03          PASS
        5               2.335165E-03          PASS
        6               2.201617E-03          PASS
```

Mass Properties Check

The weight of the integrated system math model is 15190 pounds. This is a conservative (slightly greater than the budget) weight for analysis purposes and can not be verified at the present time because assembly of the payload flight article is not complete. The mass properties for the integrated math model are shown below as computed by NASTRAN.

```
                    O U T P U T   F R O M   W E I G H T   C H E C K
                              DEGREES OF FREEDOM SET = G
                              REFERENCE POINT =   999999
                                          M O
*  3.911365E+01 -8.326673E-17  0.000000E+00 -1.332268E-15 -1.824920E+00  5.990389E+00 *
* -8.326673E-17  3.911365E+01  6.938894E-18  1.824920E+00  7.771561E-16  6.493510E+00 *
*  0.000000E+00  6.938894E-18  3.911365E+01 -5.990389E+00 -6.493510E+00  1.332268E-15 *
* -1.332268E-15  1.824920E+00 -5.990389E+00  1.045293E+05  6.052981E+02 -1.510668E+02 *
* -1.824920E+00  7.771561E-16 -6.493510E+00  6.052981E+02  7.062857E+04 -6.084945E+02 *
*  5.990389E+00  6.493510E+00  1.332268E-15 -1.510668E+02 -6.084945E+02  9.158235E+04 *
                                          S
                    *  1.000000E+00  0.000000E+00  0.000000E+00 *
                    *  0.000000E+00  1.000000E+00  0.000000E+00 *
                    *  0.000000E+00  0.000000E+00  1.000000E+00 *
         DIRECTION
    MASS AXIS SYSTEM (S)     MASS              X-C.G.         Y-C.G.         Z-C.G.
            X            3.911365E+01     -3.406145E-17 -1.531534E-01 -4.665685E-02
            Y            3.911365E+01      1.660165E-01  1.986918E-17 -4.665685E-02
            Z            3.911365E+01      1.660165E-01 -1.531534E-01  3.406145E-17
```

```
                                    I(S)
                    *  1.045283E+05 -6.043036E+02  1.513697E+02 *
                    * -6.043036E+02  7.062741E+04  6.082150E+02 *
                    *  1.513697E+02  6.082150E+02  9.158036E+04 *
                                    I(Q)
                    *  7.059917E+04                             *
                    *                9.159580E+04               *
                    *                                1.045411E+05 *
                                     Q
                    *  1.767301E-02 -1.303594E-02  9.997588E-01 *
                    * -9.994277E-01  2.861625E-02  1.804029E-02 *
                    * -2.884452E-02 -9.995055E-01 -1.252274E-02 *
                    O U T P U T   F R O M   W E I G H T   C H E C K
                              DEGREES OF FREEDOM SET = N
                              REFERENCE POINT =   999999
                                     M O
*  3.911365E+01 -1.873501E-16  5.273559E-16 -2.664535E-15 -1.824920E+00  5.990389E+00 *
* -1.873501E-16  3.911365E+01  2.723516E-16  1.824920E+00  1.776357E-15  6.493510E+00 *
*  5.273559E-16  2.723516E-16  3.911365E+01 -5.990389E+00 -6.493510E+00  5.440093E-15 *
* -2.664535E-15  1.824920E+00 -5.990389E+00  1.045405E+05  6.052981E+02 -1.510668E+02 *
* -1.824920E+00  1.776357E-15 -6.493510E+00  6.052981E+02  7.064023E+04 -6.084945E+02 *
*  5.990389E+00  6.493510E+00  5.440093E-15 -1.510668E+02 -6.084945E+02  9.159241E+04 *

               CHANGE WITH RESPECT TO G-SET RIGID BODY MASS/WEIGHT
*       0 %                                                                           *
*                    0 %                                                              *
*                                 0 %                                                 *
*                                                 0 %                                 *
*                                                                 0 %                 *
*                                                                                0 %  *


CHECKS OF FULL SYSTEM WITH TRD GAS-SUPPLY DEBRIS SHIELD  FEBRUARY 9, 2009  MSC.NASTRAN  6/17/05  PAGE 26
                    O U T P U T   F R O M   W E I G H T   C H E C K
                              DEGREES OF FREEDOM SET = F
                              REFERENCE POINT =   999999
                                     M O
*  3.911365E+01 -1.873501E-16  5.273559E-16 -2.664535E-15 -1.824920E+00  5.990389E+00 *
* -1.873501E-16  3.911365E+01  2.723516E-16  1.824920E+00  1.776357E-15  6.493510E+00 *
*  5.273559E-16  2.723516E-16  3.911365E+01 -5.990389E+00 -6.493510E+00  5.440093E-15 *
                    O U T P U T   F R O M   W E I G H T   C H E C K
                              DEGREES OF FREEDOM SET = A
                              REFERENCE POINT =   999999
                                     M O
*  3.911365E+01 -1.873501E-16  5.273559E-16 -2.664535E-15 -1.824920E+00  5.990389E+00 *
* -1.873501E-16  3.911365E+01  2.723516E-16  1.824920E+00  1.776357E-15  6.493510E+00 *
*  5.273559E-16  2.723516E-16  3.911365E+01 -5.990389E+00 -6.493510E+00  5.440093E-15 *
* -2.664535E-15  1.824920E+00 -5.990389E+00  1.045405E+05  6.052981E+02 -1.510668E+02 *
* -1.824920E+00  1.776357E-15 -6.493510E+00  6.052981E+02  7.064023E+04 -6.084945E+02 *
*  5.990389E+00  6.493510E+00  5.440093E-15 -1.510668E+02 -6.084945E+02  9.159241E+04 *

               CHANGE WITH RESPECT TO G-SET RIGID BODY MASS/WEIGHT
*       0 %                                                                           *
*                    0 %                                                              *
*                                 0 %                                                 *
*                                                 0 %                                 *
*                                                                 0 %                 *
*                                                                                0 %  *
```

Modal Check

A model analysis was performed using NASTRAN to determine the modal frequencies of the constrained system to verify that there are no mechanisms or other unexpected low-frequency modes. A modal analysis of the unconstrained system was also performed to confirm that the model has appropriate rigid-body modes. Lists of the modes for the unconstrained and constrained configurations are provided on the next two pages.

Excerpt from the NASTRAN f06 file showing the modal frequencies for the constrained system model:

```
CHECKS OF FULL SYSTEM WITH TRD GAS-SUPPLY DEBRIS SHIELD  FEBRUARY 9, 2009  MSC.NASTRAN  6/17/05  PAGE 286
                                        R E A L   E I G E N V A L U E S
MODE EXTRACTION EIGENVALUE      RADIANS         CYCLES          GENERALIZED     GENERALIZED
NO.  ORDER                                                      MASS            STIFFNESS
    1     1     1.683914E-07    4.103552E-04    6.531005E-05    1.000000E+00    1.683914E-07
    2     2     2.611013E-07    5.109807E-04    8.132510E-05    1.000000E+00    2.611013E-07
    3     3     3.471296E-07    5.891771E-04    9.377044E-05    1.000000E+00    3.471296E-07
    4     4     4.002902E-07    6.326850E-04    1.006949E-04    1.000000E+00    4.002902E-07
    5     5     1.056261E-06    1.027745E-03    1.635708E-04    1.000000E+00    1.056261E-06
    6     6     1.291598E-06    1.136485E-03    1.808772E-04    1.000000E+00    1.291598E-06
    7     7     6.922528E+02    2.631070E+01    4.187478E+00    1.000000E+00    6.922528E+02
    8     8     1.031431E+03    3.211590E+01    5.111404E+00    1.000000E+00    1.031431E+03
    9     9     1.036418E+03    3.219344E+01    5.123745E+00    1.000000E+00    1.036418E+03
   10    10     1.124692E+03    3.353642E+01    5.337487E+00    1.000000E+00    1.124692E+03
```

5.10.3.3.4 Mass Properties Check of the TRD Gas Ballistic Cover Assy

Since the TRD Gas Ballistic Cover Assembly was run integrated with the full payload model, the NASTRAN mass properties check is of the total mass of the integrated model. The TRD Gas Ballistic

Cover Assembly is a small portion. So, using FEMAP, a mass properties check was performed on just the TRD Gas Ballistic Cover Assembly.

Using FEMAP 9.3.1 > Tools > Mass Properties > Mesh Properties, the TRD Gas Ballistic Cover Assembly FEM has a mass of 0.0242424 lbf-s^2/in or a weight of 9.360 lbf.

```
FEMAP: Check Mass Properties for ds-trd-gas-inner-css-v20.MOD
126367 Element(s) Selected...

Mass                          Center of Gravity in CSys 0
Structural   =    0.0242424  X=     29.91607  Y=     54.50499  Z=     398.4029
NonStructural=           0.  X=           0.  Y=           0.  Z=           0.
Total Mass   =    0.0242424  X=     29.91607  Y=     54.50499  Z=     398.4029

Inertias about CSys 0                    Inertias about C.G. in CSys 0
Ixx =     3922.727  Ixy=     39.50089    Ixx =     2.833514  Ixy=   -0.0281794
Iyy =     3872.006  Iyz=     526.4195    Iyy =     2.435502  Iyz=   -3.2034E-3
Izz =     94.49491  Izx=     288.8637    Izz =     0.779443  Izx=     -0.07308

Total Length (Line Elements only) =     9.497021
Total Area   (Area Elements only) =     1634.473
Total Volume (All Elements)       =     407.6413
```

5.10.3.4 Detailed Stress Analysis

The critical stresses for all components of the TRD Gas Ballistic Cover Assembly are compared to the Ultimate and Yield strength of the Aluminum Alloy. Fastener, bearing, and tear-out analysis is performed for all mechanically fastened joints. All margins of safety are positive.

The minimum Margins of Safety Summary are shown in Table 5.10.3.1.1 Parts Minimum Margins of Safety, Table 5.10.3.1.3 Fastener Minimum Margins of Safety, and
Table 5.10.3.1.4 Fastener Minimum Margins of Safety.

CHECK OF TRD GAS BALLISTIC COVER ASSEMBLY, SEG39137915

TRD Gas Ballistic Cover - Outer Skin, SLG39137916-503

Allowables

Material Properties

AL ALY 6061-T6, SAE-AMS-4027, Sheet, 0.010-0.249, A

$F_{tu} := 42000 \cdot psi$ *(Ref. MMPDS-04, Table 3.6.2.0(b1))*

$F_{ty} := 36000 \cdot psi$

$F_{su} := 27000 \cdot psi$

Factors of Safety

$FS_u := 2.0$ $FS_y := 1.25$

Temperature Reduction Factors

Note: For the Debris Shield, the temperature extremes are -76 ºF to +140 ºF. These temperature reduction factors are conservative for liftoff/landing conditions. At +140 ºF:

- Ultimate: $\beta_u := 0.96$ *(Ref. MMPDS-04, Figure 3.6.2.2.1(a))*

- Yield: $\beta_y := 0.96$ *(Ref. MMPDS-04, Figure 3.6.2.2.1(b))*

Allowable Stresses

$F_{tug} := \beta_u \cdot F_{tu}$ $F_{tug} = 40320\,psi$

$F_{tyg} := \beta_y \cdot F_{ty}$ $F_{tyg} = 34560\,psi$

$F_{sug} := \beta_u \cdot F_{su}$ $F_{sug} = 25920\,psi$

TRD Gas Ballistic Cover - Outer Skin, SLG39137916-503

Omitted Elements

Note: NASPOST V.2.2 was used to sort the maximum stresses across all load cases. The finite elements in the Skin representing the area under the washers, around the circumference of bolt holes, where the bolt attachment was modeled with RBE3's, were removed from the NASPOST sort (see table below). The strength analysis of this area is performed in the corresponding Faster/Joint/Bearing analysis.

excluded 1 row of elements around holes

TRD Gas Ballistic Cover - Outer Skin, SLG39137916-503

Liftoff

Note: For the following analysis, the maximum Principal, Von-Mises, and Shear stresses of plate elements are selected. NASPOST V.2.2 is used to sort out the maximum stresses within the load cases. The elements at the bolt holes were omitted from the NASPOST sort.

NASTRAN Punch Filename: "ds-trd-gas-inner-liftoff.pch"

Maximum Stresses

$u_{tu} := 5.755 \times 10^3 \cdot psi$

```
                CQuad4s: Max ABS Principal Stress - Outer Skin
   ID     SUBCASE MAXABS-PRIN-M MAX-PRIN-TOP- MIN-PRIN-TOP- MAX-PRIN-BOT- MIN-PRIN-BOT-
6640879     1020  5.755371E+03  1.721501E+03 -5.755371E+03  5.349127E+03 -1.133526E+03
```

$u_{ty} := 7.056 \times 10^3 \cdot psi$

```
                CQuad4s: Max ABS Von-Mises Stress - Outer Skin
   ID     SUBCASE MAXABS-VON-MI VON-MISES-TOP VON-MISES-BOT
6640872     1020  7.056440E+03  7.056440E+03  6.528336E+03
```

$u_{su} := 4.021 \times 10^3 \cdot psi$

```
                CQuad4s: Max ABS Shear Stress - Outer Skin
   ID     SUBCASE  MAXABS-SHR-M MAX-SHEAR-TOP MAX-SHEAR-BOT
6640872     1020  4.020529E+03  4.020529E+03  3.735110E+03
```

Margins of Safety

$MS_{tug} := \frac{F_{tug}}{FS_u \cdot u_{tu}} - 1$ $\quad MS_{tug} = 2.503$ ***... Margin of Safety Tensile Ultimate***

$MS_{tyg} := \frac{F_{tyg}}{FS_y \cdot u_{ty}} - 1$ $\quad MS_{tyg} = 2.92$ ***... Margin of Safety Tensile Yield***

$MS_{sug} := \frac{F_{sug}}{FS_u \cdot u_{su}} - 1$ $\quad MS_{sug} = 2.22$ ***... Margin of Safety Shear Ultimate***

TRD Gas Ballistic Cover - Outer Skin, SLG39137916-503

Landing

Note: For the following analysis, the maximum Principal, Von-Mises, and Shear stresses of plate elements are selected. NASPOST V.2.2 is used to sort out the maximum stresses within the load cases. The elements at the bolt holes were omitted from the NASPOST sort.

NASTRAN Punch Filename: "ds-trd-gas-inner-landing.pch"

Maximum Stresses

$u_{tu} := 1.234 \times 10^4 \cdot psi$

```
     ID    SUBCASE MAXABS-PRIN-M MAX-PRIN-TOP- MIN-PRIN-TOP- MAX-PRIN-BOT- MIN-PRIN-BOT-
6640871      2014  1.234437E+04  1.210489E+04 -6.277523E+03  6.731450E+03 -1.234437E+04
```

$u_{ty} := 1.492 \times 10^4 \cdot psi$

```
     ID    SUBCASE MAXABS-VON-MI VON-MISES-TOP VON-MISES-BOT
6640872      2045  1.492406E+04  1.492406E+04  1.411179E+04
```

$u_{su} := 8.616 \times 10^3 \cdot psi$

```
                CQuad4s: Max ABS Shear Stress - Outer Skin
     ID    SUBCASE  MAXABS-SHR-M MAX-SHEAR-TOP MAX-SHEAR-BOT
6640872      2045  8.616208E+03  8.616208E+03  8.142071E+03
```

Margins of Safety

$MS_{tug} := \frac{F_{tug}}{FS_u \cdot u_{tu}} - 1$ $\quad MS_{tug} = 0.634$ ***... Margin of Safety Tensile Ultimate***

$MS_{tyg} := \frac{F_{tyg}}{FS_y \cdot u_{ty}} - 1$ $\quad MS_{tyg} = 0.85$ ***... Margin of Safety Tensile Yield***

$MS_{sug} := \frac{F_{sug}}{FS_u \cdot u_{su}} - 1$ $\quad MS_{sug} = 0.50$ ***... Margin of Safety Shear Ultimate***

TRD Gas Ballistic Cover - Inner Skin, SLG39137916-502

Omitted Elements

Note: NASPOST V.2.2 was used to sort the maximum stresses across all load cases. The finite elements in the Skin representing the area under the washers, around the circumference of bolt holes, where the bolt attachment was modeled with RBE3's, were removed from the NASPOST sort (see table below). The strength analysis of this area is performed in the corresponding Faster/Joint/Bearing analysis.

Excluded one row of elements around holes

TRD Gas Ballistic Cover - Inner Skin, SLG39137916-502

Liftoff

Note: For the following analysis, the maximum Principal, Von-Mises, and Shear stresses of plate elements are selected. NASPOST V.2.2 is used to sort out the maximum stresses within the load cases. The elements at the bolt holes were omitted from the NASPOST sort.

NASTRAN Punch Filename: "ds-trd-gas-inner-liftoff.pch"

Maximum Stresses

$u_{tu} := 2.32 \times 10^3 \cdot psi$

$u_{ty} := 2.158 \times 10^3 \cdot psi$

$u_{su} := 1.16 \times 10^3 \cdot psi$

```
                    Laminate: MaxABSPrin Stress -
     ID    SUBCASE      1PLY      1MAXABSPRIN      1MAJOR     1NASMAJPRIN      1MINOR
1NASMINPRIN    1NORMAL-1     1NORMAL-2
                     1SHEAR-12     1SHEAR-XZ     1SHEAR-YZ
  6534361     1026  1.000000E+00  2.320413E+03  2.320413E+03  2.320413E+03 -1.987508E-01
3.724277E+02  1.333234E+03  1.359606E+03
                    9.739034E+02  5.583984E+00 -6.585755E+00

                   Laminate: Max Von-Mises Stress -
     ID    SUBCASE      1PLY       1VONMISES
  6534361     1026  1.000000E+00  2.158485E+03

                    Laminate: Max Shear Stress -
     ID    SUBCASE      1PLY       1MAX-SHEAR   1NASMAXSHEAR
  6534361     1026  1.000000E+00  1.160306E+03  9.739927E+02
```

Margins of Safety

$$MS_{tug} := \frac{F_{tug}}{FS_u \cdot u_{tu}} - 1$$ $MS_{tug} = 7.690$ ***... Margin of Safety Tensile Ultimate***

$$MS_{tyg} := \frac{F_{tyg}}{FS_y \cdot u_{ty}} - 1$$ $MS_{tyg} = 11.81$ ***... Margin of Safety Tensile Yield***

$$MS_{sug} := \frac{F_{sug}}{FS_u \cdot u_{su}} - 1$$ $MS_{sug} = 10.17$ ***... Margin of Safety Shear Ultimate***

TRD Gas Ballistic Cover - Inner Skin, SLG39137916-502

Landing

Note: For the following analysis, the maximum Principal, Von-Mises, and Shear stresses of plate elements are selected. NASPOST V.2.2 is used to sort out the maximum stresses within the load cases. The elements at the bolt holes were omitted from the NASPOST sort.

NASTRAN Punch Filename: "ds-trd-gas-inner-landing.pch"

Maximum Stresses

$u_{tu} := 2.89 \times 10^3 \cdot psi$

```
                    Laminate: MaxABSPrin Stress -
     ID     SUBCASE      1PLY       1MAXABSPRIN      1MAJOR     1NASMAJPRIN      1MINOR
1NASMINPRIN    1NORMAL-1     1NORMAL-2
                          1SHEAR-12     1SHEAR-XZ     1SHEAR-YZ
  6525696      2030  1.000000E+00  2.889582E+03  2.889582E+03  2.889574E+03 -1.011055E+00
2.166046E+02  2.492209E+03  6.139689E+02
                        9.509176E+02  1.093590E+00 -1.555058E+01
```

$u_{ty} := 3.13 \times 10^3 \cdot psi$

$u_{su} := 1.787 \times 10^3 \cdot psi$

```
                   Laminate: Max Von-Mises Stress -
     ID     SUBCASE      1PLY       1VONMISES
  6549540     2030  1.000000E+00  3.130455E+03
                    Laminate: Max Shear Stress -
     ID     SUBCASE      1PLY       1MAX-SHEAR   1NASMAXSHEAR
  6549540     2014  1.000000E+00  1.786832E+03  1.785536E+03
```

Margins of Safety

$$MS_{tug} := \frac{F_{tug}}{FS_u \cdot u_{tu}} - 1$$

$MS_{tug} = 5.976$ ***... Margin of Safety Tensile Ultimate***

$$MS_{tyg} := \frac{F_{tyg}}{FS_y \cdot u_{ty}} - 1$$

$MS_{tyg} = 7.83$ ***... Margin of Safety Tensile Yield***

$$MS_{sug} := \frac{F_{sug}}{FS_u \cdot u_{su}} - 1$$

$MS_{sug} = 6.25$ ***... Margin of Safety Shear Ultimate***

Standoff Bracket A, SDG39137917-001

Allowables

Material Properties

AL ALY 7075-T7351, AMS-QQ-A-250/12, Plate, 0.500-1.000, A

$F_{tu} := \mathbf{68000} \cdot psi$ *(Ref. MMPDS-04 Table 3.7.7.0(b4))*

$F_{ty} := \mathbf{57000} \cdot psi$

$F_{su} := \mathbf{38000} \cdot psi$

Factors of Safety

$FS_u := \mathbf{2.0}$ $FS_y := \mathbf{1.25}$

Temperature Reduction Factors

Note: For the Debris Shield, the temperature extremes are -76 ºF to +140 ºF. These temperature reduction factors are conservative for liftoff/landing conditions. At +140 ºF:

- Ultimate: $\beta_u := \mathbf{0.96}$ *(Ref. MMPDS-04, Figure 3.7.7.1.1(c))*

- Yield: $\beta_y := \mathbf{0.96}$ *(Ref. MMPDS-04, Figure 3.7.7.1.1(d))*

Allowable Stresses

$F_{tug} := \beta_u \cdot F_{tu}$ $F_{tug} = \mathbf{65280}\, psi$

$F_{tyg} := \beta_y \cdot F_{ty}$ $F_{tyg} = \mathbf{54720}\, psi$

$F_{sug} := \beta_u \cdot F_{su}$ $F_{sug} = \mathbf{36480}\, psi$

Standoff Bracket A, SDG39137917-001

Omitted Elements

Note: NASPOST V.2.2 was used to sort the maximum stresses across all load cases. The finite elements in the Bracket representing the area under the washers, around the circumference of bolt holes, where the bolt attachment was modeled with RBE3's, were removed from the NASPOST sort (see table below). The strength analysis of this area is performed in the corresponding Faster/Joint/Bearing analysis.

1 to 2 rows of elements around a hole were excluded

Standoff Bracket A, SDG39137917-001

Landing

Note: For the following analysis, the maximum Principal, Von-Mises, and Shear stresses of plate elements are selected. NASPOST V.2.2 is used to sort out the maximum stresses within the load cases. The elements at the bolt holes were omitted from the NASPOST sort.

NASTRAN Punch Filename: "ds-trd-gas-inner-landing.pch"

Maximum Stresses

$u_{tu} := 2.962 \times 10^4 \cdot psi$

$u_{ty} := 3.117 \times 10^4 \cdot psi$

$u_{su} := 1.677 \times 10^4 \cdot psi$

```
                    CQuad4s: Max ABS Principal Stress - SB A's
      ID    SUBCASE MAXABS-PRIN-M MAX-PRIN-TOP- MIN-PRIN-TOP- MAX-PRIN-BOT- MIN-PRIN-BOT-
 6300017       2014  2.961541E+04  2.909306E+04 -2.774425E+03  2.909117E+03 -2.961541E+04

                    CQuad4s: Max ABS Von-Mises Stress - SB A's
      ID    SUBCASE MAXABS-VON-MI VON-MISES-TOP VON-MISES-BOT
 6300017       2014  3.117194E+04  3.057483E+04  3.117194E+04

                      CQuad4s: Max ABS Shear Stress - SB A's
      ID    SUBCASE  MAXABS-SHR-M MAX-SHEAR-TOP MAX-SHEAR-BOT
 6300067       2013  1.676620E+04  1.676620E+04  1.621514E+04
```

Margins of Safety

$$MS_{tug} := \frac{F_{tug}}{FS_u \cdot u_{tu}} - 1$$

$MS_{tug} = 0.102$ ***... Margin of Safety Tensile Ultimate***

$$MS_{tyg} := \frac{F_{tyg}}{FS_y \cdot u_{ty}} - 1$$

$MS_{tyg} = 0.4$ ***... Margin of Safety Tensile Yield***

$$MS_{sug} := \frac{F_{sug}}{FS_u \cdot u_{su}} - 1$$

$MS_{sug} = 0.09$ ***... Margin of Safety Shear Ultimate***

Standoff Bracket A, SDG39137917-001

Liftoff

Note: For the following analysis, the maximum Principal, Von-Mises, and Shear stresses of plate elements are selected. NASPOST V.2.2 is used to sort out the maximum stresses within the load cases. The elements at the bolt holes were omitted from the NASPOST sort.

NASTRAN Punch Filename: "ds-trd-gas-inner-liftoff.pch"

Maximum Stresses

$u_{tu} := 1.666 \times 10^4 \cdot psi$

$u_{ty} := 1.726 \times 10^4 \cdot psi$

$u_{su} := 8.918 \times 10^3 \cdot psi$

```
                    CQuad4s: Max ABS Principal Stress - SB A's
      ID    SUBCASE MAXABS-PRIN-M MAX-PRIN-TOP- MIN-PRIN-TOP- MAX-PRIN-BOT- MIN-PRIN-BOT-
 6200104       1026  1.666029E+04  1.666029E+04 -2.899295E+03  2.951877E+03 -1.663107E+04

                    CQuad4s: Max ABS Von-Mises Stress - SB A's
      ID    SUBCASE MAXABS-VON-MI VON-MISES-TOP VON-MISES-BOT
 6200104       1026  1.726489E+04  1.724540E+04  1.726489E+04

                      CQuad4s: Max ABS Shear Stress - SB A's
      ID    SUBCASE  MAXABS-SHR-M MAX-SHEAR-TOP MAX-SHEAR-BOT
 6200104       1026  8.917809E+03  8.888147E+03  8.917809E+03
```

Margins of Safety

$$MS_{tug} := \frac{F_{tug}}{FS_u \cdot u_{tu}} - 1$$

$MS_{tug} = 0.959$ ***... Margin of Safety Tensile Ultimate***

$$MS_{tyg} := \frac{F_{tyg}}{FS_y \cdot u_{ty}} - 1$$

$MS_{tyg} = 1.54$ ***... Margin of Safety Tensile Yield***

$$MS_{sug} := \frac{F_{sug}}{FS_u \cdot u_{su}} - 1$$

$MS_{sug} = 1.05$ ***... Margin of Safety Shear Ultimate***

Standoff Bracket B, SDG39137918-001

Allowables

Material Properties

AL ALY 7075-T7351, AMS-QQ-A-250/12, Plate, 0.500-1.000, A

$F_{tu} := \mathbf{68000} \cdot psi$ *(Ref. MMPDS-04 Table 3.7.7.0(b4))*

$F_{ty} := \mathbf{57000} \cdot psi$

$F_{su} := \mathbf{38000} \cdot psi$

Factors of Safety

$FS_u := \mathbf{2.0}$ $FS_y := \mathbf{1.25}$

Temperature Reduction Factors

Note: For the Debris Shield, the temperature extremes are -76 ºF to +140 ºF. These temperature reduction factors are conservative for liftoff/landing conditions. At +140 ºF:

- Ultimate: $\beta_u := \mathbf{0.96}$ *(Ref. MMPDS-04, Figure 3.7.7.1.1(c))*

- Yield: $\beta_y := \mathbf{0.96}$ *(Ref. MMPDS-04, Figure 3.7.7.1.1(d))*

Allowable Stresses

$F_{tug} := \beta_u \cdot F_{tu}$ $F_{tug} = \mathbf{65280}\, psi$

$F_{tyg} := \beta_y \cdot F_{ty}$ $F_{tyg} = \mathbf{54720}\, psi$

$F_{sug} := \beta_u \cdot F_{su}$ $F_{sug} = \mathbf{36480}\, psi$

Standoff Bracket B, SDG39137918-001

Omitted Elements

Note: NASPOST V.2.2 was used to sort the maximum stresses across all load cases. The finite elements in the Bracket representing the area under the washers, around the circumference of bolt holes, where the bolt attachment was modeled with RBE3's, were removed from the NASPOST sort (see table below). The strength analysis of this area is performed in the corresponding Faster/Joint/Bearing analysis.

```
Group44-SBBRemovedElements
Elements
6700074, 6700305, 6700312
6700398, 6700644, 6700659
6700702, 6700719, 6700722
6701962, 6701966, 6701985 THRU 6701986
6702032, 6702487, 6702540
6702546, 6702573, 6702657
6702771, 6702801, 6702808
6702825, 6702828, 6702836
6702839 THRU 6702840, 6702849, 6702893
6702923, 6702961, 6702963 THRU 6702965
6703090 THRU 6703093, 6703095, 6703104
6703126, 6703272 THRU 6703274, 6703280 THRU 6703281
6703393, 6703442 THRU 6703443, 6703446
6703448, 6703547, 6703616
6703749, 6703751, 6703754 THRU 6703759
6703831 THRU 6703834, 6704125, 6704129 THRU 6704130
6704219, 6704221, 6704227
6704288, 6704345, 6704347
6704374, 6704376, 6704409
6704464, 6704489 THRU 6704490, 6704498
6704536, 6704555 THRU 6704557, 6704561
6704586, 6704588, 6704718
6704748, 6704813, 6704833
6704843 THRU 6704845, 6704860 THRU 6704861, 6704873 THRU 6704874
6704955, 6704958 THRU 6704959, 6705058 THRU 6705059
6705061 THRU 6705062, 6705117, 6705119 THRU 6705120
6705122 THRU 6705123, 6705240, 6705243 THRU 6705244
6705246, 6705294, 6705302
6705304 THRU 6705309, 6705316, 6705334
6705337, 6705346 THRU 6705347, 6705357
6705371 THRU 6705374, 6705377 THRU 6705379, 6705381 THRU 6705382
6705387 THRU 6705391, 6705407, 6705435
6705453, 6705456, 6705473
6705476, 6705480, 6705494
6705499, 6705501, 6705503
6705517, 6705526, 6705593
6705597, 6705605, 6705634
6705636, 6705639, 6705642
6705653, 6705671, 6705675
6705681, 6705683, 6705685
6705689, 6705737, 6705756
6705763, 6705780, 6705782
6705788, 6705796, 6705802
6705807, 6705854, 6705946 THRU 6705947
6705961, 6705981, 6706064
6706081, 6706157, 6706242 THRU 6706245
6706349, 6706351, 6706390
6706405, 6706416, 6706418
6706621, 6706639 THRU 6706640, 6706642 THRU 6706643
6706648, 6706700, 6706705 THRU 6706707
6706759, 6706771, 6706784
6706808, 6706810, 6706867
6706898, 6706901, 6706904
6706907, 6706922, 6706930 THRU 6706932
6706935 THRU 6706936, 6706942, 6706944
6706946 THRU 6706947, 6706950 THRU 6706951,
6706959 THRU 6706960, 6706985, 6707008, 6707036
6707060, 6707062, 6707224
6707228 THRU 6707229, 6707263, 6707269
6707273, 6707399, 6707456
6707462, 6707532, 6707537
6707547, 6707553, 6707557
6707601, 6707610, 6707616
6707618, 6707623 THRU 6707625, 6707738
6707766, 6707772, 6707794
6707796, 6707808, 6707855 THRU 6707856
6707859, 6707863, 6707865 THRU 6707867
6707869 THRU 6707876, 6707892 THRU 6707893,
6707899 THRU 6707901, 6707903, 6707910, 6707948
6707963, 6707967, 6707976
6707979 THRU 6707980, 6707987 THRU 6707990,
6707997 THRU 6707999, 6708001, 6708004 THRU 6708007,
6708013 THRU 6708014, 6708019, 6708023,
6708030 THRU 6708031, 6708034 THRU 6708035, 6708038,
6708040 THRU 6708041
6708043, 6708094, 6708154
6708287 THRU 6708289, 6708292, 6708294
6708437, 6708439 THRU 6708442, 6708444
6708451, 6708453, 6708462 THRU 6708463
6708465, 6708486, 6708489 THRU 6708491
6708494, 6708499, 6708511
6708513 THRU 6708515, 6708521, 6708530
6708534, 6708622, 6708681
6708683, 6708720, 6708725
6708744 THRU 6708747, 6708772, 6708784
6708787, 6708790 THRU 6708791, 6708795
6708799, 6708816, 6708868
6708879 THRU 6708880, 6708882, 6708885
6708887 THRU 6708888, 6708891, 6708893
6708896, 6708910, 6708913
6708918, 6708946 THRU 6708948, 6708958
6708960, 6708986, 6709011
6709057, 6709117 THRU 6709120, 6709159
6709245, 6709247 THRU 6709248, 6709251
6709290, 6709294, 6709296
6709398, 6709400 THRU 6709401, 6709403 THRU 6709404
6709410, 6709424, 6709439
6709441, 6709444 THRU 6709446, 6709475 THRU 6709478
6709509, 6709531, 6709547
6709552 THRU 6709553, 6709555 THRU 6709556, 6709559
6709563, 6709573, 6709603 THRU 6709604
6709626, 6709630, 6709635 THRU 6709636
```

Standoff Bracket B, SDG39137918-001

Landing

Note: For the following analysis, the maximum Principal, Von-Mises, and Shear stresses of plate elements are selected. NASPOST V.2.2 is used to sort out the maximum stresses within the load cases. The elements at the bolt holes were omitted from the NASPOST sort.

NASTRAN Punch Filename: "ds-trd-gas-inner-landing.pch"

Maximum Stresses

$u_{tu} := 1.229 \times 10^4 \cdot psi$

TETRA: Max ABS Principal Stress - SB B

ID	SUBCASE	NO_LABEL	MAX-MAX-PRIN	MAX-MIN-PRIN
6705907	2030	1.229235E+04	1.229235E+04	8.076963E+03

$u_{ty} := 1.103 \times 10^4 \cdot psi$

TETRA: Max ABS Von-Mises Stress - SB B

ID	SUBCASE	NO_LABEL	MAX-VONM
6701935	2030	1.102977E+04	1.102977E+04

$u_{su} := 6.317 \times 10^3 \cdot psi$

TETRA: Max ABS Shear Stress - SB B

ID	SUBCASE	NO_LABEL	MAX-MAX-SHR
6701935	2030	6.316509E+03	6.316509E+03

Margins of Safety

$MS_{tug} := \frac{F_{tug}}{FS_u \cdot u_{tu}} - 1$ $\quad MS_{tug} = 1.656$ *... Margin of Safety Tensile Ultimate*

$MS_{tyg} := \frac{F_{tyg}}{FS_y \cdot u_{ty}} - 1$ $\quad MS_{tyg} = 2.97$ *... Margin of Safety Tensile Yield*

$MS_{sug} := \frac{F_{sug}}{FS_u \cdot u_{su}} - 1$ $\quad MS_{sug} = 1.89$ *... Margin of Safety Shear Ultimate*

Standoff Bracket B, SDG39137918-001

Liftoff

Note: For the following analysis, the maximum Principal, Von-Mises, and Shear stresses of plate elements are selected. NASPOST V.2.2 is used to sort out the maximum stresses within the load cases. The elements at the bolt holes were omitted from the NASPOST sort.

NASTRAN Punch Filename: "ds-trd-gas-inner-liftoff.pch"

Maximum Stresses

$u_{tu} := 7.055 \times 10^3 \cdot psi$

```
                TETRA: Max ABS Principal Stress - SB B
    ID     SUBCASE     NO_LABEL     MAX-MAX-PRIN   MAX-MIN-PRIN
6703546      1030   7.054525E+03   2.788419E+03   7.054525E+03
```

$u_{ty} := 5.423 \times 10^3 \cdot psi$

```
                TETRA: Max ABS Von-Mises Stress - SB B
    ID     SUBCASE     NO_LABEL       MAX-VONM
6701935      1030   5.422713E+03   5.422713E+03
```

$u_{su} := 3.128 \times 10^3 \cdot psi$

```
                  TETRA: Max ABS Shear Stress - SB B
    ID     SUBCASE     NO_LABEL     MAX-MAX-SHR
6701935      1030   3.128141E+03   3.128141E+03
```

Margins of Safety

$MS_{tug} := \frac{F_{tug}}{FS_u \cdot u_{tu}} - 1$ $\quad MS_{tug} = 3.627$ ***... Margin of Safety Tensile Ultimate***

$MS_{tyg} := \frac{F_{tyg}}{FS_y \cdot u_{ty}} - 1$ $\quad MS_{tyg} = 7.07$ ***... Margin of Safety Tensile Yield***

$MS_{sug} := \frac{F_{sug}}{FS_u \cdot u_{su}} - 1$ $\quad MS_{sug} = 4.83$ ***... Margin of Safety Shear Ultimate***

CHECK OF TRD GAS BALLISTIC COVER ASSEMBLY, SEG39137915

TRD Gas Ballistic Cover - Outer Skin SLG39137916-503, Fail-Safe

Allowables

Material Properties

AL ALY 6061-T6, SAE-AMS-4027, Sheet, 0.010-0.249, A

$F_{tu} := 42000 \cdot psi$ *(Ref. MMPDS-04, Table 3.6.2.0(b1))*

$F_{ty} := 36000 \cdot psi$

$F_{su} := 27000 \cdot psi$

Factors of Safety

$FS_u := 1.0$ $FS_y := 1.0$

Temperature Reduction Factors

Note: For the Debris Shield, the temperature extremes are -76 ºF to +140 ºF. These temperature reduction factors are conservative for liftoff/landing conditions. At +140 ºF:

- Ultimate: $\beta_u := 0.96$ *(Ref. MMPDS-04, Figure 3.6.2.2.1(a))*

- Yield: $\beta_y := 0.96$ *(Ref. MMPDS-04, Figure 3.6.2.2.1(b))*

Allowable Stresses

$F_{tug} := \beta_u \cdot F_{tu}$ $F_{tug} = 40320\,psi$

$F_{tyg} := \beta_y \cdot F_{ty}$ $F_{tyg} = 34560\,psi$

$F_{sug} := \beta_u \cdot F_{su}$ $F_{sug} = 25920\,psi$

TRD Gas Ballistic Cover - Outer Skin SLG39137916-503, Fail-Safe

Omitted Elements

Note: NASPOST V.2.2 was used to sort the maximum stresses across all load cases. The finite elements in the Skin representing the area under the washers, around the circumference of bolt holes, where the bolt attachment was modeled with RBE3's, were removed from the NASPOST sort (see table below). The strength analysis of this area is performed in the corresponding Faster/Joint/Bearing analysis.

excluded 1 row of elements around holes

TRD Gas Ballistic Cover - Outer Skin SLG39137916-503, Fail-Safe

Landing, One Splice Plate Removed

Note: For the following analysis, the maximum Principal, Von-Mises, and Shear stresses of plate elements are selected. NASPOST V.2.2 is used to sort out the maximum stresses within the load cases. The elements at the bolt holes were omitted from the NASPOST sort.

NASTRAN Punch Filename: "ds-trd-gas-inner-landing-21.pch"

Maximum Stresses

$u_{tu} := 1.284 \times 10^4 \cdot psi$

$u_{ty} := 1.46 \times 10^4 \cdot psi$

$u_{su} := 8.421 \times 10^3 \cdot psi$

```
ds-trd-gas-cover-21-quad-la.txt
     +++ ---------------------------------------------- +++
          CQuad4s: Max ABS Principal Stress - Outer Skin
   ID    SUBCASE MAXABS-PRIN-M MAX-PRIN-TOP- MIN-PRIN-TOP- MAX-PRIN-BOT- MIN-PRIN-BOT-
6648763     2030  1.283763E+04  1.246252E+04 -6.749760E+03  6.729791E+03 -1.283763E+04
     +++ ---------------------------------------------- +++
          CQuad4s: Max ABS Von-Mises Stress - Outer Skin
   ID    SUBCASE MAXABS-VON-MI VON-MISES-TOP VON-MISES-BOT
6648759     2062  1.460232E+04  1.460232E+04  1.430851E+04
     +++ ---------------------------------------------- +++
          CQuad4s: Max ABS Shear Stress - Outer Skin
   ID    SUBCASE  MAXABS-SHR-M MAX-SHEAR-TOP MAX-SHEAR-BOT
6648759     2062  8.420623E+03  8.420623E+03  8.213926E+03
```

Margins of Safety

$$MS_{tug} := \frac{F_{tug}}{FS_u \cdot u_{tu}} - 1$$

$MS_{tug} = 2.140$ ***... Margin of Safety Tensile Ultimate***

$$MS_{tyg} := \frac{F_{tyg}}{FS_y \cdot u_{ty}} - 1$$

$MS_{tyg} = 1.37$ ***... Margin of Safety Tensile Yield***

$$MS_{sug} := \frac{F_{sug}}{FS_u \cdot u_{su}} - 1$$

$MS_{sug} = 2.08$ ***... Margin of Safety Shear Ultimate***

TRD Gas Ballistic Cover - Outer Skin SLG39137916-503, Fail-Safe

Landing, One Standoff Bracket to Box S Removed

Note: For the following analysis, the maximum Principal, Von-Mises, and Shear stresses of plate elements are selected. NASPOST V.2.2 is used to sort out the maximum stresses within the load cases. The elements at the bolt holes were omitted from the NASPOST sort.

NASTRAN Punch Filename: "ds-trd-gas-inner-landing-22.pch"

Maximum Stresses

$u_{tu} := 1.843 \times 10^4 \cdot psi$

$u_{ty} := 2.098 \times 10^4 \cdot psi$

$u_{su} := 1.209 \times 10^4 \cdot psi$

```
ds-trd-gas-cover-22-quad-la.txt
     +++ ---------------------------------------------- +++
          CQuad4s: Max ABS Principal Stress - Outer Skin
   ID    SUBCASE MAXABS-PRIN-M MAX-PRIN-TOP- MIN-PRIN-TOP- MAX-PRIN-BOT- MIN-PRIN-BOT-
6648763     2030  1.842702E+04  1.781990E+04 -9.871152E+03  1.011868E+04 -1.842702E+04
     +++ ---------------------------------------------- +++
          CQuad4s: Max ABS Von-Mises Stress - Outer Skin
   ID    SUBCASE MAXABS-VON-MI VON-MISES-TOP VON-MISES-BOT
6648759     2030  2.098432E+04  2.098432E+04  2.060351E+04
     +++ ---------------------------------------------- +++
          CQuad4s: Max ABS Shear Stress - Outer Skin
   ID    SUBCASE  MAXABS-SHR-M MAX-SHEAR-TOP MAX-SHEAR-BOT
6648759     2030  1.208672E+04  1.208672E+04  1.179751E+04
```

Margins of Safety

$MS_{tug} := \frac{F_{tug}}{FS_u \cdot u_{tu}} - 1$ $\quad MS_{tug} = 1.188$ ***... Margin of Safety Tensile Ultimate***

$MS_{tyg} := \frac{F_{tyg}}{FS_y \cdot u_{ty}} - 1$ $\quad MS_{tyg} = 0.65$ ***... Margin of Safety Tensile Yield***

$MS_{sug} := \frac{F_{sug}}{FS_u \cdot u_{su}} - 1$ $\quad MS_{sug} = 1.14$ ***... Margin of Safety Shear Ultimate***

TRD Gas Ballistic Cover - Outer Skin SLG39137916-503, Fail-Safe

Liftoff, One Splice Plate Removed

Note: For the following analysis, the maximum Principal, Von-Mises, and Shear stresses of plate elements are selected. NASPOST V.2.2 is used to sort out the maximum stresses within the load cases. The elements at the bolt holes were omitted from the NASPOST sort.

NASTRAN Punch Filename: "ds-trd-gas-inner-liftoff-21.pch"

Maximum Stresses

$u_{tu} := 7551.591 \cdot psi$

$u_{ty} := 6816.634 \cdot psi$

$u_{su} := 3914.028 \cdot psi$

```
ds-trd-gas-cover-21-quad-lo.txt
     +++ ---------------------------------------------- +++
          CQuad4s: Max ABS Principal Stress - Outer Skin
   ID    SUBCASE MAXABS-PRIN-M MAX-PRIN-TOP- MIN-PRIN-TOP- MAX-PRIN-BOT- MIN-PRIN-BOT-
6609404     1004  7.551591E+03  1.793438E+03 -4.661775E+03  7.551591E+03 -1.396993E+03
     +++ ---------------------------------------------- +++
          CQuad4s: Max ABS Von-Mises Stress - Outer Skin
   ID    SUBCASE MAXABS-VON-MI VON-MISES-TOP VON-MISES-BOT
6648759     1003  6.816634E+03  6.816634E+03  6.533434E+03
     +++ ---------------------------------------------- +++
          CQuad4s: Max ABS Shear Stress - Outer Skin
   ID    SUBCASE  MAXABS-SHR-M MAX-SHEAR-TOP MAX-SHEAR-BOT
6648759     1003  3.914028E+03  3.914028E+03  3.766621E+03
```

Margins of Safety

$$MS_{tug} := \frac{F_{tug}}{FS_u \cdot u_{tu}} - 1$$ $MS_{tug} = 4.339$ ***... Margin of Safety Tensile Ultimate***

$$MS_{tyg} := \frac{F_{tyg}}{FS_y \cdot u_{ty}} - 1$$ $MS_{tyg} = 4.07$ ***... Margin of Safety Tensile Yield***

$$MS_{sug} := \frac{F_{sug}}{FS_u \cdot u_{su}} - 1$$ $MS_{sug} = 5.62$ ***... Margin of Safety Shear Ultimate***

TRD Gas Ballistic Cover - Outer Skin SLG39137916-503, Fail-Safe

Liftoff, One Standoff Bracket to Box S Removed

Note: For the following analysis, the maximum Principal, Von-Mises, and Shear stresses of plate elements are selected. NASPOST V.2.2 is used to sort out the maximum stresses within the load cases. The elements at the bolt holes were omitted from the NASPOST sort.

NASTRAN Punch Filename: "ds-trd-gas-inner-liftoff-22.pch"

Maximum Stresses

$u_{tu} := 1.21 \times 10^4 \cdot psi$

$u_{ty} := 1.101 \times 10^4 \cdot psi$

$u_{su} := 6.306 \times 10^3 \cdot psi$

```
ds-trd-gas-cover-22-quad-lo.txt
     +++ ---------------------------------------------- +++
          CQuad4s: Max ABS Principal Stress - Outer Skin
   ID    SUBCASE MAXABS-PRIN-M MAX-PRIN-TOP- MIN-PRIN-TOP- MAX-PRIN-BOT- MIN-PRIN-BOT-
6646746     1004  1.210379E+04 -9.094947E-13 -1.210379E+04  1.118241E+04  1.818989E-12
     +++ ---------------------------------------------- +++
          CQuad4s: Max ABS Von-Mises Stress - Outer Skin
   ID    SUBCASE MAXABS-VON-MI VON-MISES-TOP VON-MISES-BOT
6648759     1030  1.101002E+04  1.101002E+04  1.082326E+04
     +++ ---------------------------------------------- +++
          CQuad4s: Max ABS Shear Stress - Outer Skin
   ID    SUBCASE  MAXABS-SHR-M MAX-SHEAR-TOP MAX-SHEAR-BOT
6648759     1030  6.305825E+03  6.305825E+03  6.144337E+03
```

Margins of Safety

$MS_{tug} := \frac{F_{tug}}{FS_u \cdot u_{tu}} - 1$ $\quad MS_{tug} = 2.332$ ***... Margin of Safety Tensile Ultimate***

$MS_{tyg} := \frac{F_{tyg}}{FS_y \cdot u_{ty}} - 1$ $\quad MS_{tyg} = 2.14$ ***... Margin of Safety Tensile Yield***

$MS_{sug} := \frac{F_{sug}}{FS_u \cdot u_{su}} - 1$ $\quad MS_{sug} = 3.11$ ***... Margin of Safety Shear Ultimate***

TRD Gas Ballistic Cover - Inner Skin SLG39137916-502, Fail-Safe

Omitted Elements

Note: NASPOST V.2.2 was used to sort the maximum stresses across all load cases. The finite elements in the Skin representing the area under the washers, around the circumference of bolt holes, where the bolt attachment was modeled with RBE3's, were removed from the NASPOST sort (see table below). The strength analysis of this area is performed in the corresponding Faster/Joint/Bearing analysis.

Excluded one row of elements around holes

TRD Gas Ballistic Cover - Inner Skin SLG39137916-502, Fail-Safe

Landing, One Splice Plate Removed

Note: For the following analysis, the maximum Principal, Von-Mises, and Shear stresses of plate elements are selected. NASPOST V.2.2 is used to sort out the maximum stresses within the load cases. The elements at the bolt holes were omitted from the NASPOST sort.

NASTRAN Punch Filename: "ds-trd-gas-inner-landing-21.pch"

Maximum Stresses

$u_{tu} := 3.801 \times 10^3 \cdot psi$

$u_{ty} := 4.178 \times 10^3 \cdot psi$

$u_{su} := 2.378 \times 10^3 \cdot psi$

```
ds-trd-gas-cover-21-laminate-la.txt
     +++ ---------------------------------------------- +++
                    Laminate: MaxABSPrin Stress -
   ID     SUBCASE      1PLY      1MAXABSPRIN      1MAJOR        1MINOR
6525696     2014  1.000000E+00  3.800818E+03  3.800818E+03 -4.934973E+00
     +++ ---------------------------------------------- +++
                   Laminate: Max Von-Mises Stress -
   ID     SUBCASE      1PLY       1VONMISES
6549540     2014  1.000000E+00  4.177771E+03
     +++ ---------------------------------------------- +++
                    Laminate: Max Shear Stress -
   ID     SUBCASE      1PLY       1MAX-SHEAR
6549540     2014  1.000000E+00  2.377622E+03
```

Margins of Safety

$MS_{tug} := \frac{F_{tug}}{FS_u \cdot u_{tu}} - 1$ $\quad MS_{tug} = 9.608$ ***... Margin of Safety Tensile Ultimate***

$MS_{tyg} := \frac{F_{tyg}}{FS_y \cdot u_{ty}} - 1$ $\quad MS_{tyg} = 7.27$ ***... Margin of Safety Tensile Yield***

$MS_{sug} := \frac{F_{sug}}{FS_u \cdot u_{su}} - 1$ $\quad MS_{sug} = 9.90$ ***... Margin of Safety Shear Ultimate***

TRD Gas Ballistic Cover - Inner Skin SLG39137916-502, Fail-Safe

Landing, One Standoff Bracket to Box S Removed

Note: For the following analysis, the maximum Principal, Von-Mises, and Shear stresses of plate elements are selected. NASPOST V.2.2 is used to sort out the maximum stresses within the load cases. The elements at the bolt holes were omitted from the NASPOST sort.

NASTRAN Punch Filename: "ds-trd-gas-inner-landing-22.pch"

Maximum Stresses

$u_{tu} := 4.641 \times 10^3 \cdot psi$

$u_{ty} := 5.181 \times 10^3 \cdot psi$

$u_{su} := 2.981 \times 10^3 \cdot psi$

```
ds-trd-gas-cover-22-laminate-la.txt
                    Laminate: MaxABSPrin Stress -
   ID     SUBCASE      1PLY       1MAXABSPRIN      1MAJOR         1MINOR
6525696     2013  1.000000E+00  4.640707E+03  4.640707E+03 -5.094584E-01
     +++ ---------------------------------------------- +++
                   Laminate: Max Von-Mises Stress -
   ID     SUBCASE      1PLY       1VONMISES
6549540     2014  1.000000E+00  5.181231E+03
     +++ ---------------------------------------------- +++
                    Laminate: Max Shear Stress -
   ID     SUBCASE      1PLY       1MAX-SHEAR
6549540     2014  1.000000E+00  2.981376E+03
```

Margins of Safety

$MS_{tug} := \frac{F_{tug}}{FS_u \cdot u_{tu}} - 1$ $\quad MS_{tug} = 7.688$ *... Margin of Safety Tensile Ultimate*

$MS_{tyg} := \frac{F_{tyg}}{FS_y \cdot u_{ty}} - 1$ $\quad MS_{tyg} = 5.67$ *... Margin of Safety Tensile Yield*

$MS_{sug} := \frac{F_{sug}}{FS_u \cdot u_{su}} - 1$ $\quad MS_{sug} = 7.70$ *... Margin of Safety Shear Ultimate*

TRD Gas Ballistic Cover - Inner Skin SLG39137916-502, Fail-Safe

Liftoff, One Splice Plate Removed

Note: For the following analysis, the maximum Principal, Von-Mises, and Shear stresses of plate elements are selected. NASPOST V.2.2 is used to sort out the maximum stresses within the load cases. The elements at the bolt holes were omitted from the NASPOST sort.

NASTRAN Punch Filename: "ds-trd-gas-inner-liftoff-21.pch"

Maximum Stresses

$u_{tu} := 2.392 \times 10^3 \cdot psi$

$u_{ty} := 2.294 \times 10^3 \cdot psi$

$u_{su} := 1.324 \times 10^3 \cdot psi$

```
ds-trd-gas-cover-21-laminate-lo.txt
     +++ ---------------------------------------------- +++
                    Laminate: MaxABSPrin Stress -
   ID     SUBCASE      1PLY      1MAXABSPRIN      1MAJOR        1MINOR
6534361     1026  1.000000E+00  2.392081E+03  2.392081E+03 -2.197358E-01
     +++ ---------------------------------------------- +++
                   Laminate: Max Von-Mises Stress -
   ID     SUBCASE      1PLY       1VONMISES
6549540     1014  1.000000E+00  2.294196E+03
     +++ ---------------------------------------------- +++
                     Laminate: Max Shear Stress -
   ID     SUBCASE      1PLY       1MAX-SHEAR
6549540     1014  1.000000E+00  1.323813E+03
     +++ ---------------------------------------------- +++
```

Margins of Safety

$MS_{tug} := \frac{F_{tug}}{FS_u \cdot u_{tu}} - 1$ $\quad MS_{tug} = 15.856$ ***... Margin of Safety Tensile Ultimate***

$MS_{tyg} := \frac{F_{tyg}}{FS_y \cdot u_{ty}} - 1$ $\quad MS_{tyg} = 14.07$ ***... Margin of Safety Tensile Yield***

$MS_{sug} := \frac{F_{sug}}{FS_u \cdot u_{su}} - 1$ $\quad MS_{sug} = 18.58$ ***... Margin of Safety Shear Ultimate***

TRD Gas Ballistic Cover - Inner Skin SLG39137916-502, Fail-Safe

Liftoff, One Standoff Bracket to Box S Removed

Note: For the following analysis, the maximum Principal, Von-Mises, and Shear stresses of plate elements are selected. NASPOST V.2.2 is used to sort out the maximum stresses within the load cases. The elements at the bolt holes were omitted from the NASPOST sort.

NASTRAN Punch Filename: "ds-trd-gas-inner-liftoff-22.pch"

Maximum Stresses

$u_{tu} := 3.935 \times 10^3 \cdot psi$

$u_{ty} := 3.957 \times 10^3 \cdot psi$

$u_{su} := 2.194 \times 10^3 \cdot psi$

```
ds-trd-gas-cover-22-laminate-lo.txt
     +++ ---------------------------------------------- +++
                    Laminate: MaxABSPrin Stress -
   ID     SUBCASE      1PLY       1MAXABSPRIN      1MAJOR         1MINOR
6538030     1020  1.000000E+00  3.934517E+03  3.934517E+03 -6.663421E+01
     +++ ---------------------------------------------- +++
                   Laminate: Max Von-Mises Stress -
   ID     SUBCASE      1PLY       1VONMISES
6538030     1020  1.000000E+00  3.957035E+03
     +++ ---------------------------------------------- +++
                     Laminate: Max Shear Stress -
   ID     SUBCASE      1PLY       1MAX-SHEAR
6549540     1014  1.000000E+00  2.194259E+03
```

Margins of Safety

$$MS_{tug} := \frac{F_{tug}}{FS_u \cdot u_{tu}} - 1$$

$MS_{tug} = 9.247$ ***... Margin of Safety Tensile Ultimate***

$$MS_{tyg} := \frac{F_{tyg}}{FS_y \cdot u_{ty}} - 1$$

$MS_{tyg} = 7.73$ ***... Margin of Safety Tensile Yield***

$$MS_{sug} := \frac{F_{sug}}{FS_u \cdot u_{su}} - 1$$

$MS_{sug} = 10.81$ ***... Margin of Safety Shear Ultimate***

TRD Gas Ballistic Cover - Standoff Bracket A SDG39137917-001, Fail-Safe

Allowables

Material Properties

AL ALY 7075-T7351, AMS-QQ-A-250/12, Plate, 0.500-1.000, A

$F_{tu} := \mathbf{68000} \cdot psi$ *(Ref. MMPDS-04 Table 3.7.7.0(b4))*

$F_{ty} := \mathbf{57000} \cdot psi$

$F_{su} := \mathbf{38000} \cdot psi$

Factors of Safety

$FS_u := \mathbf{1.0}$ $FS_y := \mathbf{1.0}$

Temperature Reduction Factors

Note: For the Debris Shield, the temperature extremes are -76 ºF to +140 ºF. These temperature reduction factors are conservative for liftoff/landing conditions. At +140 ºF:

- Ultimate: $\beta_u := \mathbf{0.96}$ *(Ref. MMPDS-04, Figure 3.7.7.1.1(c))*

- Yield: $\beta_y := \mathbf{0.96}$ *(Ref. MMPDS-04, Figure 3.7.7.1.1(d))*

Allowable Stresses

$F_{tug} := \beta_u \cdot F_{tu}$ $F_{tug} = \mathbf{65280}\, psi$

$F_{tyg} := \beta_y \cdot F_{ty}$ $F_{tyg} = \mathbf{54720}\, psi$

$F_{sug} := \beta_u \cdot F_{su}$ $F_{sug} = \mathbf{36480}\, psi$

TRD Gas Ballistic Cover - Standoff Bracket A SDG39137917-001, Fail-Safe

Omitted Elements

Note: NASPOST V.2.2 was used to sort the maximum stresses across all load cases. The finite elements in the Bracket representing the area under the washers, around the circumference of bolt holes, where the bolt attachment was modeled with RBE3's, were removed from the NASPOST sort (see table below). The strength analysis of this area is performed in the corresponding Faster/Joint/Bearing analysis.

1 to 2 rows of elements around a hole were excluded

TRD Gas Ballistic Cover - Standoff Bracket A SDG39137917-001, Fail-Safe

Landing, One Splice Plate Removed

Note: For the following analysis, the maximum Principal, Von-Mises, and Shear stresses of plate elements are selected. NASPOST V.2.2 is used to sort out the maximum stresses within the load cases. The elements at the bolt holes were omitted from the NASPOST sort.

NASTRAN Punch Filename: "ds-trd-gas-inner-landing-21.pch"

Maximum Stresses

$u_{tu} := 3.91 \times 10^4 \cdot psi$

$u_{ty} := 4.013 \times 10^4 \cdot psi$

$u_{su} := 2.17 \times 10^4 \cdot psi$

```
ds-trd-gas-cover-bracket-v21-quad-la.txt
     +++ ---------------------------------------------- +++
              CQuad4s: Max ABS Principal Stress - SB A's
   ID     SUBCASE MAXABS-PRIN-M MAX-PRIN-TOP- MIN-PRIN-TOP- MAX-PRIN-BOT- MIN-PRIN-BOT-
6200140     2045  3.909939E+04  2.130955E+03 -3.834604E+04  3.909939E+04 -2.074436E+03
     +++ ---------------------------------------------- +++
              CQuad4s: Max ABS Von-Mises Stress - SB A's
   ID     SUBCASE MAXABS-VON-MI VON-MISES-TOP VON-MISES-BOT
6300017     2013  4.012590E+04  3.946387E+04  4.012590E+04
     +++ ---------------------------------------------- +++
                CQuad4s: Max ABS Shear Stress - SB A's
   ID     SUBCASE  MAXABS-SHR-M MAX-SHEAR-TOP MAX-SHEAR-BOT
6300067     2013  2.169504E+04  2.169504E+04  2.107197E+04
```

Margins of Safety

$MS_{tug} := \frac{F_{tug}}{FS_u \cdot u_{tu}} - 1$ $\quad MS_{tug} = 0.670$ ***... Margin of Safety Tensile Ultimate***

$MS_{tyg} := \frac{F_{tyg}}{FS_y \cdot u_{ty}} - 1$ $\quad MS_{tyg} = 0.36$ ***... Margin of Safety Tensile Yield***

$MS_{sug} := \frac{F_{sug}}{FS_u \cdot u_{su}} - 1$ $\quad MS_{sug} = 0.68$ ***... Margin of Safety Shear Ultimate***

TRD Gas Ballistic Cover - Standoff Bracket A SDG39137917-001, Fail-Safe

Landing, One Standoff Bracket to Box S Removed

Note: For the following analysis, the maximum Principal, Von-Mises, and Shear stresses of plate elements are selected. NASPOST V.2.2 is used to sort out the maximum stresses within the load cases. The elements at the bolt holes were omitted from the NASPOST sort.

NASTRAN Punch Filename: "ds-trd-gas-inner-landing-22.pch"

Maximum Stresses

$u_{tu} := 6.214 \times 10^4 \cdot psi$

$u_{ty} := 5.438 \times 10^4 \cdot psi$

$u_{su} := 3.203 \times 10^4 \cdot psi$

```
ds-trd-gas-cover-bracket-v22-quad-la.txt
       +++ ---------------------------------------------- +++
                CQuad4s: Max ABS Principal Stress - SB A's
     ID     SUBCASE MAXABS-PRIN-M MAX-PRIN-TOP- MIN-PRIN-TOP- MAX-PRIN-BOT- MIN-PRIN-BOT-
  6300025     2030  6.214108E+04  5.961985E+04 -3.002382E+03  3.205771E+03 -6.214108E+04
       +++ ---------------------------------------------- +++
                CQuad4s: Max ABS Von-Mises Stress - SB A's
     ID     SUBCASE MAXABS-VON-MI VON-MISES-TOP VON-MISES-BOT
 *6200140     2014  5.437933E+04  5.332507E+04  5.437933E+04
       +++ ---------------------------------------------- +++
                 CQuad4s: Max ABS Shear Stress - SB A's
     ID     SUBCASE  MAXABS-SHR-M MAX-SHEAR-TOP MAX-SHEAR-BOT
  6300025     2030  3.202554E+04  3.081681E+04  3.202554E+04
```

(*See Note)

Margins of Safety

$MS_{tug} := \frac{F_{tug}}{FS_u \cdot u_{tu}} - 1$ $\quad MS_{tug} = 0.051$ ***... Margin of Safety Tensile Ultimate***

$MS_{tyg} := \frac{F_{tyg}}{FS_y \cdot u_{ty}} - 1$ $\quad MS_{tyg} = 0.006$ ***... Margin of Safety Tensile Yield***

$MS_{sug} := \frac{F_{sug}}{FS_u \cdot u_{su}} - 1$ $\quad MS_{sug} = 0.14$ ***... Margin of Safety Shear Ultimate***

***Note: Omitted Elements 6300025, 6300018, and 6300017 from CQuad4 Max ABS Von-Mises Stress sort because of their close proximity to the circumference of bolt holes, where the bolt attachment was modeled with RBE3's. The strength analysis of this area is performed in the corresponding Faster/Joint/Bearing analysis.**

TRD Gas Ballistic Cover - Standoff Bracket A SDG39137917-001, Fail-Safe

Liftoff, One Splice Plate Removed

Note: For the following analysis, the maximum Principal, Von-Mises, and Shear stresses of plate elements are selected. NASPOST V.2.2 is used to sort out the maximum stresses within the load cases. The elements at the bolt holes were omitted from the NASPOST sort.

NASTRAN Punch Filename: "ds-trd-gas-inner-liftoff-21.pch"

Maximum Stresses

$u_{tu} := 2.028 \times 10^4 \cdot psi$

$u_{ty} := 2.025 \times 10^4 \cdot psi$

$u_{su} := 1.014 \times 10^4 \cdot psi$

```
ds-trd-gas-cover-bracket-v21-quad-lo.txt
     +++ ---------------------------------------------- +++
              CQuad4s: Max ABS Principal Stress - SB A's
   ID    SUBCASE MAXABS-PRIN-M MAX-PRIN-TOP- MIN-PRIN-TOP- MAX-PRIN-BOT- MIN-PRIN-BOT-
6200132     1020  2.027872E+04  1.981123E+04  1.728040E-11  2.655725E-10 -2.027872E+04
     +++ ---------------------------------------------- +++
              CQuad4s: Max ABS Von-Mises Stress - SB A's
   ID    SUBCASE MAXABS-VON-MI VON-MISES-TOP VON-MISES-BOT
6200132     1020  2.025121E+04  1.977127E+04  2.025121E+04
     +++ ---------------------------------------------- +++
                CQuad4s: Max ABS Shear Stress - SB A's
   ID    SUBCASE  MAXABS-SHR-M MAX-SHEAR-TOP MAX-SHEAR-BOT
6200132     1020  1.013936E+04  9.905613E+03  1.013936E+04
```

Margins of Safety

$MS_{tug} := \frac{F_{tug}}{FS_u \cdot u_{tu}} - 1$ $\quad MS_{tug} = 2.219$ ***... Margin of Safety Tensile Ultimate***

$MS_{tyg} := \frac{F_{tyg}}{FS_y \cdot u_{ty}} - 1$ $\quad MS_{tyg} = 1.7$ ***... Margin of Safety Tensile Yield***

$MS_{sug} := \frac{F_{sug}}{FS_u \cdot u_{su}} - 1$ $\quad MS_{sug} = 2.60$ ***... Margin of Safety Shear Ultimate***

TRD Gas Ballistic Cover - Standoff Bracket A SDG39137917-001, Fail-Safe

Liftoff, One Standoff Bracket to Box S Removed

Note: For the following analysis, the maximum Principal, Von-Mises, and Shear stresses of plate elements are selected. NASPOST V.2.2 is used to sort out the maximum stresses within the load cases. The elements at the bolt holes were omitted from the NASPOST sort.

NASTRAN Punch Filename: "ds-trd-gas-inner-liftoff-22.pch"

Maximum Stresses

$u_{tu} := 3.901 \times 10^4 \cdot psi$

$u_{ty} := 4.136 \times 10^4 \cdot psi$

$u_{su} := 2.225 \times 10^4 \cdot psi$

```
ds-trd-gas-cover-bracket-v22-quad-lo.txt
     +++ ---------------------------------------------- +++
            CQuad4s: Max ABS Principal Stress - SB A's
   ID     SUBCASE MAXABS-PRIN-M MAX-PRIN-TOP- MIN-PRIN-TOP- MAX-PRIN-BOT- MIN-PRIN-BOT-
6300017     1014  3.900628E+04  3.848966E+04 -4.236630E+03  4.429268E+03 -3.900628E+04
     +++ ---------------------------------------------- +++
            CQuad4s: Max ABS Von-Mises Stress - SB A's
   ID     SUBCASE MAXABS-VON-MI VON-MISES-TOP VON-MISES-BOT
6300017     1014  4.135909E+04  4.072881E+04  4.135909E+04
     +++ ---------------------------------------------- +++
              CQuad4s: Max ABS Shear Stress - SB A's
   ID     SUBCASE  MAXABS-SHR-M MAX-SHEAR-TOP MAX-SHEAR-BOT
6300078     1014  2.224730E+04  2.224730E+04  2.159804E+04
```

Margins of Safety

$MS_{tug} := \frac{F_{tug}}{FS_u \cdot u_{tu}} - 1$ $\quad MS_{tug} = 0.673$ ***... Margin of Safety Tensile Ultimate***

$MS_{tyg} := \frac{F_{tyg}}{FS_y \cdot u_{ty}} - 1$ $\quad MS_{tyg} = 0.32$ ***... Margin of Safety Tensile Yield***

$MS_{sug} := \frac{F_{sug}}{FS_u \cdot u_{su}} - 1$ $\quad MS_{sug} = 0.64$ ***... Margin of Safety Shear Ultimate***

TRD Gas Ballistic Cover - Standoff Bracket B SDG39137918-001, Fail-Safe

Allowables

Material Properties

AL ALY 7075-T7351, AMS-QQ-A-250/12, Plate, 0.500-1.000, A

$F_{tu} := \mathbf{68000} \cdot psi$ *(Ref. MMPDS-04 Table 3.7.7.0(b4))*

$F_{ty} := \mathbf{57000} \cdot psi$

$F_{su} := \mathbf{38000} \cdot psi$

Factors of Safety

$FS_u := \mathbf{1.0}$ $FS_y := \mathbf{1.0}$

Temperature Reduction Factors

Note: For the Debris Shield, the temperature extremes are -76 ºF to +140 ºF. These temperature reduction factors are conservative for liftoff/landing conditions. At +140 ºF:

- Ultimate: $\beta_u := \mathbf{0.96}$ *(Ref. MMPDS-04, Figure 3.7.7.1.1(c))*

- Yield: $\beta_y := \mathbf{0.96}$ *(Ref. MMPDS-04, Figure 3.7.7.1.1(d))*

Allowable Stresses

$F_{tug} := \beta_u \cdot F_{tu}$ $F_{tug} = \mathbf{65280}\, psi$

$F_{tyg} := \beta_y \cdot F_{ty}$ $F_{tyg} = \mathbf{54720}\, psi$

$F_{sug} := \beta_u \cdot F_{su}$ $F_{sug} = \mathbf{36480}\, psi$

TRD Gas Ballistic Cover - Standoff Bracket B SDG39137918-001, Fail-Safe

Omitted Elements

Note: NASPOST V.2.2 was used to sort the maximum stresses across all load cases. The finite elements in the Bracket representing the area under the washers, around the circumference of bolt holes, where the bolt attachment was modeled with RBE3's, were removed from the NASPOST sort (see table below). The strength analysis of this area is performed in the corresponding Faster/Joint/Bearing analysis.

```
Group44-SBBRemovedElements
Elements
6700074, 6700305, 6700312
6700398, 6700644, 6700659
6700702, 6700719, 6700722
6701962, 6701966, 6701985 THRU 6701986
6702032, 6702487, 6702540
6702546, 6702573, 6702657
6702771, 6702801, 6702808
6702825, 6702828, 6702836
6702839 THRU 6702840, 6702849, 6702893
6702923, 6702961, 6702963 THRU 6702965
6703090 THRU 6703093, 6703095, 6703104
6703126, 6703272 THRU 6703274, 6703280 THRU 6703281
6703393, 6703442 THRU 6703443, 6703446
6703448, 6703547, 6703616
6703749, 6703751, 6703754 THRU 6703759
6703831 THRU 6703834, 6704125, 6704129 THRU 6704130
6704219, 6704221, 6704227
6704288, 6704345, 6704347
6704374, 6704376, 6704409
6704464, 6704489 THRU 6704490, 6704498
6704536, 6704555 THRU 6704557, 6704561
6704586, 6704588, 6704718
6704748, 6704813, 6704833
6704843 THRU 6704845, 6704860 THRU 6704861, 6704873 THRU 6704874
6704955, 6704958 THRU 6704959, 6705058 THRU 6705059
6705061 THRU 6705062, 6705117, 6705119 THRU 6705120
6705122 THRU 6705123, 6705240, 6705243 THRU 6705244
6705246, 6705294, 6705302
6705304 THRU 6705309, 6705316, 6705334
6705337, 6705346 THRU 6705347, 6705357
6705371 THRU 6705374, 6705377 THRU 6705379, 6705381 THRU 6705382
6705387 THRU 6705391, 6705407, 6705435
6705453, 6705456, 6705473
6705476, 6705480, 6705494
6705499, 6705501, 6705503
6705517, 6705526, 6705593
6705597, 6705605, 6705634
6705636, 6705639, 6705642
6705653, 6705671, 6705675
6705681, 6705683, 6705685
6705689, 6705737, 6705756
6705763, 6705780, 6705782
6705788, 6705796, 6705802
6705807, 6705854, 6705946 THRU 6705947
6705961, 6705981, 6706064
6706081, 6706157, 6706242 THRU 6706245
6706349, 6706351, 6706390
6706405, 6706416, 6706418
6706621, 6706639 THRU 6706640, 6706642 THRU 6706643
6706648, 6706700, 6706705 THRU 6706707
6706759, 6706771, 6706784
6706808, 6706810, 6706867
6706898, 6706901, 6706904
6706907, 6706922, 6706930 THRU 6706932
6706935 THRU 6706936, 6706942, 6706944
6706946 THRU 6706947, 6706950 THRU 6706951,
6706959 THRU 6706960, 6706985, 6707008, 6707036
6707060, 6707062, 6707224
6707228 THRU 6707229, 6707263, 6707269
6707273, 6707399, 6707456
6707462, 6707532, 6707537
6707547, 6707553, 6707557
6707601, 6707610, 6707616
6707618, 6707623 THRU 6707625, 6707738
6707766, 6707772, 6707794
6707796, 6707808, 6707855 THRU 6707856
6707859, 6707863, 6707865 THRU 6707867
6707869 THRU 6707876, 6707892 THRU 6707893,
6707899 THRU 6707901, 6707903, 6707910, 6707948
6707963, 6707967, 6707976
6707979 THRU 6707980, 6707987 THRU 6707990,
6707997 THRU 6707999, 6708001, 6708004 THRU 6708007,
6708013 THRU 6708014, 6708019, 6708023,
6708030 THRU 6708031, 6708034 THRU 6708035, 6708038,
6708040 THRU 6708041
6708043, 6708094, 6708154
6708287 THRU 6708289, 6708292, 6708294
6708437, 6708439 THRU 6708442, 6708444
6708451, 6708453, 6708462 THRU 6708463
6708465, 6708486, 6708489 THRU 6708491
6708494, 6708499, 6708511
6708513 THRU 6708515, 6708521, 6708530
6708534, 6708622, 6708681
6708683, 6708720, 6708725
6708744 THRU 6708747, 6708772, 6708784
6708787, 6708790 THRU 6708791, 6708795
6708799, 6708816, 6708868
6708879 THRU 6708880, 6708882, 6708885
6708887 THRU 6708888, 6708891, 6708893
6708896, 6708910, 6708913
6708918, 6708946 THRU 6708948, 6708958
6708960, 6708986, 6709011
6709057, 6709117 THRU 6709120, 6709159
6709245, 6709247 THRU 6709248, 6709251
6709290, 6709294, 6709296
6709398, 6709400 THRU 6709401, 6709403 THRU 6709404
6709410, 6709424, 6709439
6709441, 6709444 THRU 6709446, 6709475 THRU 6709478
6709509, 6709531, 6709547
6709552 THRU 6709553, 6709555 THRU 6709556, 6709559
6709563, 6709573, 6709603 THRU 6709604
6709626, 6709630, 6709635 THRU 6709636
```

TRD Gas Ballistic Cover - Standoff Bracket B SDG39137918-001, Fail-Safe

Landing, One Splice Plate Removed

Note: For the following analysis, the maximum Principal, Von-Mises, and Shear stresses of plate elements are selected. NASPOST V.2.2 is used to sort out the maximum stresses within the load cases. The elements at the bolt holes were omitted from the NASPOST sort.

NASTRAN Punch Filename: "ds-trd-gas-inner-landing-21.pch"

Maximum Stresses

$u_{tu} := 1.301 \times 10^4 \cdot psi$

$u_{ty} := 1.047 \times 10^4 \cdot psi$

$u_{su} := 6.045 \times 10^3 \cdot psi$

```
ds-trd-gas-cover-bracket-v21-tetra-la.txt
     +++ ---------------------------------------------- +++
                TETRA: Max ABS Principal Stress - SB B
   ID     SUBCASE     NO_LABEL     MAX-MAX-PRIN  MAX-MIN-PRIN
6703546     2030   1.301398E+04  5.081544E+03  1.301398E+04
     +++ ---------------------------------------------- +++
                TETRA: Max ABS Von-Mises Stress - SB B
   ID     SUBCASE     NO_LABEL       MAX-VONM
6701935     2030   1.047488E+04  1.047488E+04
     +++ ---------------------------------------------- +++
                  TETRA: Max ABS Shear Stress - SB B
   ID     SUBCASE     NO_LABEL     MAX-MAX-SHR
6701935     2030   6.045411E+03  6.045411E+03
```

Margins of Safety

$MS_{tug} := \frac{F_{tug}}{FS_u \cdot u_{tu}} - 1$ $\quad MS_{tug} = 4.018$ *... Margin of Safety Tensile Ultimate*

$MS_{tyg} := \frac{F_{tyg}}{FS_y \cdot u_{ty}} - 1$ $\quad MS_{tyg} = 4.23$ *... Margin of Safety Tensile Yield*

$MS_{sug} := \frac{F_{sug}}{FS_u \cdot u_{su}} - 1$ $\quad MS_{sug} = 5.03$ *... Margin of Safety Shear Ultimate*

TRD Gas Ballistic Cover - Standoff Bracket B SDG39137918-001, Fail-Safe

Landing, One Standoff Bracket to Box S Removed

Note: For the following analysis, the maximum Principal, Von-Mises, and Shear stresses of plate elements are selected. NASPOST V.2.2 is used to sort out the maximum stresses within the load cases. The elements at the bolt holes were omitted from the NASPOST sort.

NASTRAN Punch Filename: "ds-trd-gas-inner-landing-22.pch"

Maximum Stresses

$u_{tu} := 80.753 \cdot psi$

$u_{ty} := 83.667 \cdot psi$

$u_{su} := 46.256 \cdot psi$

```
ds-trd-gas-cover-bracket-v22-tetra-la.txt
     +++ ---------------------------------------------- +++
                 TETRA: Max ABS Principal Stress - SB B
   ID     SUBCASE     NO_LABEL     MAX-MAX-PRIN  MAX-MIN-PRIN
6703072     2062   8.075338E+01  6.378373E+01  8.075338E+01
     +++ ---------------------------------------------- +++
                 TETRA: Max ABS Von-Mises Stress - SB B
   ID     SUBCASE     NO_LABEL       MAX-VONM
6701359     2030   8.366663E+01  8.366663E+01
     +++ ---------------------------------------------- +++
                   TETRA: Max ABS Shear Stress - SB B
   ID     SUBCASE     NO_LABEL     MAX-MAX-SHR
6701359     2030   4.625639E+01  4.625639E+01
```

Margins of Safety

$$MS_{tug} := \frac{F_{tug}}{FS_u \cdot u_{tu}} - 1$$

$MS_{tug} = 807.391$ ***... Margin of Safety Tensile Ultimate***

$$MS_{tyg} := \frac{F_{tyg}}{FS_y \cdot u_{ty}} - 1$$

$MS_{tyg} = 653.02$ ***... Margin of Safety Tensile Yield***

$$MS_{sug} := \frac{F_{sug}}{FS_u \cdot u_{su}} - 1$$

$MS_{sug} = 787.65$ ***... Margin of Safety Shear Ultimate***

TRD Gas Ballistic Cover - Standoff Bracket B SDG39137918-001, Fail-Safe

Liftoff, One Splice Plate Removed

Note: For the following analysis, the maximum Principal, Von-Mises, and Shear stresses of plate elements are selected. NASPOST V.2.2 is used to sort out the maximum stresses within the load cases. The elements at the bolt holes were omitted from the NASPOST sort.

NASTRAN Punch Filename: "ds-trd-gas-inner-liftoff-21.pch"

Maximum Stresses

$u_{tu} := 7.657 \times 10^3 \cdot psi$

$u_{ty} := 5.53 \times 10^3 \cdot psi$

$u_{su} := 3.178 \times 10^3 \cdot psi$

```
ds-trd-gas-cover-bracket-v21-tetra-lo.txt
     +++ ---------------------------------------------- +++
                 TETRA: Max ABS Principal Stress - SB B
   ID     SUBCASE     NO_LABEL     MAX-MAX-PRIN  MAX-MIN-PRIN
6703546     1030   7.656533E+03  3.001652E+03  7.656533E+03
     +++ ---------------------------------------------- +++
                 TETRA: Max ABS Von-Mises Stress - SB B
   ID     SUBCASE     NO_LABEL       MAX-VONM
6701935     1030   5.529602E+03  5.529602E+03
     +++ ---------------------------------------------- +++
                   TETRA: Max ABS Shear Stress - SB B
   ID     SUBCASE     NO_LABEL     MAX-MAX-SHR
6701935     1030   3.177905E+03  3.177905E+03
```

Margins of Safety

$MS_{tug} := \frac{F_{tug}}{FS_u \cdot u_{tu}} - 1$ $\quad MS_{tug} = 7.526$ ***... Margin of Safety Tensile Ultimate***

$MS_{tyg} := \frac{F_{tyg}}{FS_y \cdot u_{ty}} - 1$ $\quad MS_{tyg} = 8.9$ ***... Margin of Safety Tensile Yield***

$MS_{sug} := \frac{F_{sug}}{FS_u \cdot u_{su}} - 1$ $\quad MS_{sug} = 10.48$ ***... Margin of Safety Shear Ultimate***

TRD Gas Ballistic Cover - Standoff Bracket B SDG39137918-001, Fail-Safe

Liftoff, One Standoff Bracket to Box S Removed

Note: For the following analysis, the maximum Principal, Von-Mises, and Shear stresses of plate elements are selected. NASPOST V.2.2 is used to sort out the maximum stresses within the load cases. The elements at the bolt holes were omitted from the NASPOST sort.

NASTRAN Punch Filename: "ds-trd-gas-inner-liftoff-22.pch"

Maximum Stresses

$u_{tu} := 49.04 \cdot psi$

$u_{ty} := 52.606 \cdot psi$

$u_{su} := 29.144 \cdot psi$

```
ds-trd-gas-cover-bracket-v22-tetra-lo.txt
     +++ ---------------------------------------------- +++
                TETRA: Max ABS Principal Stress - SB B
   ID     SUBCASE     NO_LABEL     MAX-MAX-PRIN  MAX-MIN-PRIN
6705673     1030  4.903954E+01  4.903954E+01  3.557255E+01
     +++ ---------------------------------------------- +++
                TETRA: Max ABS Von-Mises Stress - SB B
   ID     SUBCASE     NO_LABEL       MAX-VONM
6701359     1030  5.260625E+01  5.260625E+01
     +++ ---------------------------------------------- +++
                  TETRA: Max ABS Shear Stress - SB B
   ID     SUBCASE     NO_LABEL     MAX-MAX-SHR
6701359     1030  2.914411E+01  2.914411E+01
```

Margins of Safety

$MS_{tug} := \frac{F_{tug}}{FS_u \cdot u_{tu}} - 1$ $\quad MS_{tug} = 1330.158$ ***... Margin of Safety Tensile Ultimate***

$MS_{tyg} := \frac{F_{tyg}}{FS_y \cdot u_{ty}} - 1$ $\quad MS_{tyg} = 1.04 \times 10^3$ ***... Margin of Safety Tensile Yield***

$MS_{sug} := \frac{F_{sug}}{FS_u \cdot u_{su}} - 1$ $\quad MS_{sug} = 1.25 \times 10^3$ ***... Margin of Safety Shear Ultimate***

CHECK OF TRD GAS BALLISTIC COVER ASSEMBLY, SEG39137915

TRD Gas Ballistic Cover - Splice Plates SDG39137927/8/9

Allowables

Material Properties

AL ALY 6061-T651, AMS-QQ-A-250/11, Sheet, 0.010-0.249, A

$F_{tu} := 42000 \cdot psi$ *(Ref. MMPDS-04, Table 3.6.2.0(b1))*

$F_{ty} := 36000 \cdot psi$

$F_{su} := 27000 \cdot psi$

Factors of Safety

$FS_u := 1.0$ $FS_y := 1.0$

Temperature Reduction Factors

Note: For the Debris Shield, the temperature extremes are -76 ºF to +140 ºF. These temperature reduction factors are conservative for liftoff/landing conditions. At +140 ºF:

- Ultimate: $\beta_u := 0.96$ *(Ref. MMPDS-04, Figure 3.6.2.2.1(a))*

- Yield: $\beta_y := 0.96$ *(Ref. MMPDS-04, Figure 3.6.2.2.1(b))*

Allowable Stresses

$F_{tug} := \beta_u \cdot F_{tu}$ $F_{tug} = 40320\,psi$

$F_{tyg} := \beta_y \cdot F_{ty}$ $F_{tyg} = 34560\,psi$

$F_{sug} := \beta_u \cdot F_{su}$ $F_{sug} = 25920\,psi$

TRD Gas Ballistic Cover - Splice Plates SDG39137927/8/9

Section Properties

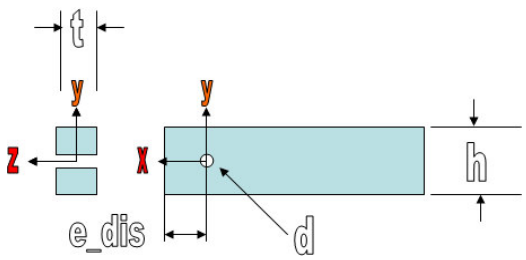

$t := .125\text{in}$ $\quad d := .194\text{in}$ $\quad h := .625\text{in}$

$e_dis := (0.278\text{in}) + \frac{d}{2}$ $\quad e_dis = 0.375\,\text{in}$

$Item := \begin{pmatrix} 1 \\ 2 \end{pmatrix}$ $\quad bb := \begin{pmatrix} t \\ t \end{pmatrix}$ $\quad dd := \begin{pmatrix} \frac{h-d}{2} \\ \frac{h-d}{2} \end{pmatrix}$ $\quad z := \begin{pmatrix} 0 \\ 0 \end{pmatrix}\text{in}$ $\quad y := \begin{pmatrix} \frac{h-d}{4} + \frac{d}{2} \\ \frac{-h+d}{4} + \frac{-d}{2} \end{pmatrix}$

$bb = \begin{pmatrix} 0.125 \\ 0.125 \end{pmatrix}\text{in}$ $\quad dd = \begin{pmatrix} 0.215 \\ 0.215 \end{pmatrix}\text{in}$ $\quad z = \begin{pmatrix} 0 \\ 0 \end{pmatrix}\text{in}$ $\quad y = \begin{pmatrix} 0.205 \\ -0.205 \end{pmatrix}\text{in}$

$i := 1 .. \text{rows}(Item)$

$A_i := bb_i \cdot dd_i$ $\quad A = \begin{pmatrix} 0.027 \\ 0.027 \end{pmatrix}\text{in}^2$ $\quad Asum := \left(\sum A\right)$

$Az_i := A_i \cdot z_i$ $\quad Azz_i := Az_i \cdot z_i$ $\quad Ay_i := A_i \cdot y_i$ $\quad Ayy_i := Ay_i \cdot y_i$

$Az = \begin{pmatrix} 0 \\ 0 \end{pmatrix}\text{in}^2$ $\quad Azz = \begin{pmatrix} 0 \\ 0 \end{pmatrix}\text{in}^4$ $\quad Ay = \begin{pmatrix} 5.515 \times 10^{-3} \\ -5.515 \times 10^{-3} \end{pmatrix}\text{in}^3$ $\quad Ayy = \begin{pmatrix} 1.129 \times 10^{-3} \\ 1.129 \times 10^{-3} \end{pmatrix}\text{in}^4$

$Azsum := \left(\sum Az\right)$ $\quad Azzsum := \left(\sum Azz\right)$ $\quad Aysum := \left(\sum Ay\right)$ $\quad Ayysum := \left(\sum Ayy\right)$

$Azsum = 0$ $\quad Azzsum = 0$ $\quad Aysum = 0\,\text{in}^3$ $\quad Ayysum = 0.002\,\text{in}^4$

$Izz_i := \frac{bb_i \cdot (dd_i)^3}{12}$ $\quad Iyy_i := \frac{(bb_i)^3 \cdot dd_i}{12}$

$Izz = \begin{pmatrix} 0 \\ 0 \end{pmatrix}\text{in}^4$ $\quad Iyy = \begin{pmatrix} 0 \\ 0 \end{pmatrix}\text{in}^4$

TRD Gas Ballistic Cover - Splice Plates SDG39137927/8/9

Section Properties

$Izsum := \left(\sum Izz\right)$ $\quad$ $Iysum := \left(\sum Iyy\right)$

$Zbar := \frac{Azsum}{Asum}$ $\quad$ $Ybar := \frac{Aysum}{Asum}$

$Zbar = 0 \times 10^{0}$ $\quad$ $Ybar = 0 \times 10^{0}\,in$ $\quad$ $Aysum = 0\,in^{3}$

$Iy := Iysum + Azzsum - Asum \cdot Zbar^{2}$ $\quad$ $Iz := Izsum + Ayysum - Asum \cdot Ybar^{2}$

$Iy = 7.015 \times 10^{-5}\,in^{4} \times 10^{0}$ $\quad$ $Iz = 2.467 \times 10^{-3}\,in^{4} \times 10^{0}$

Moment of Inertia About zy Axis $\quad$ $Izy := 0 \cdot in^{4}$

Area $\quad$ $A := Asum$ $\quad$ $A = 0.054\,in^{2}$

Enclosed Area $\quad$ $Ae := (h \cdot t) \cdot in^{2}$

$Ae = 0.078\,in^{2}\,in^{2}$

Thickness $\quad$ $t = 0.125\,in$

Stress Recovery Point Coordinates

$$cy := \begin{pmatrix} \frac{h}{2} \\ \frac{h}{2} \\ \frac{-h}{2} \\ \frac{-h}{2} \\ \frac{d}{2} \\ \frac{d}{2} \\ \frac{-d}{2} \\ \frac{-d}{2} \end{pmatrix} \qquad cz := \begin{pmatrix} \frac{-t}{2} \\ \frac{t}{2} \\ \frac{-t}{2} \\ \frac{t}{2} \\ \frac{-t}{2} \\ \frac{t}{2} \\ \frac{-t}{2} \\ \frac{t}{2} \end{pmatrix} \qquad \begin{pmatrix} 1 \\ 2 \\ 3 \\ 4 \\ 5 \\ 6 \\ 7 \\ 8 \end{pmatrix}$$

$i := 1 .. rows(cz)$

TRD Gas Ballistic Cover - Splice Plates SDG39137927/8/9, Landing

64 Landing Conditions - Loads

Zero Out All Variables

$M2 := 0$ $S1 := 0$ $M1 := 0$ $S2 := 0$ $MSu := 0$ $umax := 0$ $p1 := 0$ $uv := 0$

$u := 0$ $MaxShear := 0$ $MSy := 0$ $MSu1 := 0$ $p2 := 0$ $Tx := 0$ $id := 0$

$:= 0$ $MaxTension := 0$ $MSsu := 0$ $MSu2 := 0$ $vm := 0$ $Fax := 0$ $cases := 0$

$forces := READPRN(\text{"Beams-20-la.txt"})$

$j := 1 .. rows(forces)$ $id_j := forces_{j,1}$ $cases_j := forces_{j,2}$

$M1_j := forces_{j,3} \cdot in \cdot lbf$ $M2_j := forces_{j,4} \cdot in \cdot lbf$ $Tx_j := forces_{j,8} \cdot in \cdot lbf$ $cases_{j+rows(forces)} := forces_{j,2}$

$S1_j := forces_{j,5} \cdot lbf$ $S2_j := forces_{j,6} \cdot lbf$ $Fax_j := forces_{j,7} \cdot lbf$

$M1_{j+rows(forces)} := forces_{j,9} \cdot in \cdot lbf$

$M2_{j+rows(forces)} := forces_{j,10} \cdot in \cdot lbf$ $Tx_{j+rows(forces)} := forces_{j,8} \cdot in \cdot lbf$

$S2_{j+rows(forces)} := forces_{j,12} \cdot lbf$ $Fax_{j+rows(forces)} := forces_{j,7} \cdot lbf$

$S1_{j+rows(forces)} := forces_{j,11} \cdot lbf$

$id_{j+rows(forces)} := forces_{j,1}$

$cases_{j+rows(forces)} := forces_{j,2}$ $j := 1 .. rows(forces) \cdot 2$

$Fx := Fax$ $max(Fx) = 12.875\,lbf$ $min(Fx) = -23.37\,lbf$

$Fy := S1$ $max(Fy) = 1.402\,lbf$ $min(Fy) = -2.051\,lbf$

$Fz := S2$ $max(Fz) = 14.659\,lbf$ $min(Fz) = -9.301\,lbf$

$Mz := M1$ $max(Mz) = 2.792\,in\,lbf$ $min(Mz) = -1.675\,in\,lbf$

$My := -M2$ $max(My) = 5.591\,in\,lbf$ $min(My) = -5.584\,in\,lbf$

$T := Tx$ $max(T) = 1.784\,in\,lbf$ $min(T) = -1.392\,in\,lbf$

Rivet Hole Loads

$MaxTension_j := \sqrt{(Fz_j)^2}$ $max(MaxTension) = 14.659\,lbf$ $min(MaxTension) = 0\,lbf$

$MaxShear_j := \sqrt{(Fx_j)^2 + (Fy_j)^2}$ $max(MaxShear) = 23.41\,lbf$ $min(MaxShear) = 0.04\,lbf$

TRD Gas Ballistic Cover - Splice Plates SDG39137927/8/9, Landing

64 Landing Conditions - Maximum Stresses on Cross Section

Normal is Direct Axial Plus Bending

$$_{i,j} := \frac{Fx_j}{A} + \frac{(My_j \cdot Iz + Mz_j \cdot Izy) \cdot cz_i}{Iy \cdot Iz - Izy^2} - \frac{(Mz_j \cdot Iy + My_j \cdot Izy) \cdot cy_i}{Iy \cdot Iz - Izy^2}$$

$\max(\ ) = \mathbf{4921.308}$ psi

Shear Due to Transverse Loading

$$uv_j := \sqrt{\left(\frac{Fy_j}{A}\right)^2 + \left(\frac{Fz_j}{A}\right)^2}$$

$\max(uv) = \mathbf{272.396}$ psi

Combined Shear

$$u_j := uv_j$$

$\max(u) = \mathbf{272.396}$ psi

Principal Stresses

$$p1_{i,j} := \frac{_{i,j}}{2} + \left[\left(\frac{_{i,j}}{2}\right)^2 + (u_j)^2\right]^{\frac{1}{2}}$$

$\max(\ p1) = \mathbf{4932.814}$ psi

Principal Stresses (cont.)

$$p2_{i,j} := \frac{_{i,j}}{2} - \left[\left(\frac{_{i,j}}{2}\right)^2 + (u_j)^2\right]^{\frac{1}{2}}$$

$\max(\ p2) = -\mathbf{0}$ psi

Von-Mises Stress

$$vm_{i,j} := \sqrt{(\ p1_{i,j})^2 + (\ p2_{i,j})^2 - \ p1_{i,j} \cdot \ p2_{i,j}}$$

$\max(\ vm) = \mathbf{5737.026}$ psi

Maximum Shear Stress

$$umax_{i,j} := \sqrt{\frac{1}{4} \cdot (\ _{i,j})^2 + (u_j)^2}$$

$\max(umax) = \mathbf{2868.612}$ psi

$$MSu1_{i,j} := \left(\frac{F_{tug}}{FS_u \cdot \overrightarrow{|\ p1_{i,j}|}}\right) - 1$$

$\min(MSu1) = \mathbf{7.17}$

$$MSu2_{i,j} := \left(\frac{F_{tug}}{FS_u \cdot \overrightarrow{|\ p2_{i,j}|}}\right) - 1$$

$\min(MSu2) = \mathbf{6.028}$

TRD Gas Ballistic Cover - Splice Plates SDG39137927/8/9, Landing

64 Landing Conditions - Margins of Safety

$MSu_{i,j} := \min(MSu1_{i,j}, MSu2_{i,j})$ $\min(MSu) = \mathbf{6.028}$ ***Ultimate (using Principal)***

$MSy_{i,j} := \left(\frac{F_{tyg}}{FS_y \cdot vm_{i,j}}\right) - 1$ $\min(MSy) = \mathbf{5.024}$ ***Yield (using Von-Mises)***

$MSsu_{i,j} := \left(\frac{F_{sug}}{FS_u \cdot umax_{i,j}}\right) - 1$ $\min(MSsu) = \mathbf{8.036}$ ***Ultimate (Shear)***

TRD Gas Ballistic Cover - Splice Plates SDG39137927/8/9, Landing, Fail-Safe

One Splice Plate Removed - Loads

Zero Out All Variables

$M2 := 0$ $S1 := 0$ $M1 := 0$ $S2 := 0$ $MSu := 0$ $umax := 0$ $p1 := 0$ $uv := 0$

$u := 0$ $MaxShear := 0$ $MSy := 0$ $MSu1 := 0$ $p2 := 0$ $Tx := 0$ $id := 0$

$\quad := 0$ $MaxTension := 0$ $MSsu := 0$ $MSu2 := 0$ $vm := 0$ $Fax := 0$ $cases := 0$

$forces := READPRN(\text{"Beams-21-la.txt"})$

$j := 1 .. rows(forces)$ $id_j := forces_{j,1}$ $cases_j := forces_{j,2}$

$M1_j := forces_{j,3} \cdot in \cdot lbf$ $M2_j := forces_{j,4} \cdot in \cdot lbf$ $Tx_j := forces_{j,8} \cdot in \cdot lbf$ $cases_{j+rows(forces)} := forces_{j,2}$

$S1_j := forces_{j,5} \cdot lbf$ $S2_j := forces_{j,6} \cdot lbf$ $Fax_j := forces_{j,7} \cdot lbf$

$M1_{j+rows(forces)} := forces_{j,9} \cdot in \cdot lbf$

$M2_{j+rows(forces)} := forces_{j,10} \cdot in \cdot lbf$ $Tx_{j+rows(forces)} := forces_{j,8} \cdot in \cdot lbf$

$S2_{j+rows(forces)} := forces_{j,12} \cdot lbf$ $Fax_{j+rows(forces)} := forces_{j,7} \cdot lbf$

$S1_{j+rows(forces)} := forces_{j,11} \cdot lbf$

$id_{j+rows(forces)} := forces_{j,1}$

$cases_{j+rows(forces)} := forces_{j,2}$ $j := 1 .. rows(forces) \cdot 2$

$Fx := Fax$ $max(Fx) = 13.469\,lbf$ $min(Fx) = -23.892\,lbf$

$Fy := S1$ $max(Fy) = 1.609\,lbf$ $min(Fy) = -1.843\,lbf$

$Fz := S2$ $max(Fz) = 7.348\,lbf$ $min(Fz) = -12.753\,lbf$

$Mz := M1$ $max(Mz) = 3.469\,in\,lbf$ $min(Mz) = -2.011\,in\,lbf$

$My := -M2$ $max(My) = 5.85\,in\,lbf$ $min(My) = -5.851\,in\,lbf$

$T := Tx$ $max(T) = 1.16\,in\,lbf$ $min(T) = -1.9\,in\,lbf$

Rivet Hole Loads

$MaxTension_j := \sqrt{(Fz_j)^2}$ $max(MaxTension) = 12.753\,lbf$ $min(MaxTension) = 0\,lbf$

$MaxShear_j := \sqrt{(Fx_j)^2 + (Fy_j)^2}$ $max(MaxShear) = 23.911\,lbf$ $min(MaxShear) = 0.04\,lbf$

TRD Gas Ballistic Cover - Splice Plates SDG39137927/8/9, Landing, Fail-Safe

One Splice Plate Removed - Maximum Stresses on Cross Section

Normal is Direct Axial Plus Bending

$$_{i,j} := \frac{Fx_j}{A} + \frac{(My_j \cdot Iz + Mz_j \cdot Izy) \cdot cz_i}{Iy \cdot Iz - Izy^2} - \frac{(Mz_j \cdot Iy + My_j \cdot Izy) \cdot cy_i}{Iy \cdot Iz - Izy^2}$$

$\max(\ ) = \mathbf{5196.67}$ psi

Shear Due to Transverse Loading

$$uv_j := \sqrt{\left(\frac{Fy_j}{A}\right)^2 + \left(\frac{Fz_j}{A}\right)^2}$$

$\max(uv) = \mathbf{236.98}$ psi

Combined Shear

$$u_j := uv_j$$

$\max(u) = \mathbf{236.98}$ psi

Principal Stresses

$$p1_{i,j} := \frac{_{i,j}}{2} + \left[\left(\frac{_{i,j}}{2}\right)^2 + (u_j)^2\right]^{\frac{1}{2}}$$

$\max(\ p1) = \mathbf{5206.574}$ psi

Principal Stresses (cont.)

$$p2_{i,j} := \frac{_{i,j}}{2} - \left[\left(\frac{_{i,j}}{2}\right)^2 + (u_j)^2\right]^{\frac{1}{2}}$$

$\max(\ p2) = -\mathbf{0.001}$ psi

Von-Mises Stress

$$vm_{i,j} := \sqrt{(\ p1_{i,j})^2 + (\ p2_{i,j})^2 - \ p1_{i,j} \cdot \ p2_{i,j}}$$

$\max(\ vm) = \mathbf{6074.716}$ psi

Maximum Shear Stress

$$umax_{i,j} := \sqrt{\frac{1}{4} \cdot (\ _{i,j})^2 + (u_j)^2}$$

$\max(umax) = \mathbf{3037.579}$ psi

$$MSu1_{i,j} := \left(\frac{F_{tug}}{FS_u \cdot \overrightarrow{|\ p1_{i,j}|}}\right) - 1$$

$\min(MSu1) = \mathbf{6.74}$

$$MSu2_{i,j} := \left(\frac{F_{tug}}{FS_u \cdot \overrightarrow{|\ p2_{i,j}|}}\right) - 1$$

$\min(MSu2) = \mathbf{5.638}$

TRD Gas Ballistic Cover - Splice Plates SDG39137927/8/9, Landing, Fail-Safe

One Splice Plate Removed - Margins of Safety

$MSu_{i,j} := \min(MSu1_{i,j}, MSu2_{i,j})$ $\min(MSu) = \mathbf{5.638}$ ***...Ultimate (using Principal)***

$MSy_{i,j} := \left(\frac{F_{tyg}}{FS_y \cdot vm_{i,j}}\right) - 1$ $\min(MSy) = \mathbf{4.69}$ ***...Yield (using Von-Mises)***

$MSsu_{i,j} := \left(\frac{F_{sug}}{FS_u \cdot umax_{i,j}}\right) - 1$ $\min(MSsu) = \mathbf{7.53}$ ***...Ultimate (Shear)***

TRD Gas Ballistic Cover - Splice Plates SDG39137927/8/9, Landing, Fail-Safe

One Standoff Bracket to Box S Removed - Loads

Zero Out All Variables

$M2 := 0$ $S1 := 0$ $M1 := 0$ $S2 := 0$ $MSu := 0$ $umax := 0$ $p1 := 0$ $uv := 0$

$u := 0$ $MaxShear := 0$ $MSy := 0$ $MSu1 := 0$ $p2 := 0$ $Tx := 0$ $id := 0$

$\quad := 0$ $MaxTension := 0$ $MSsu := 0$ $MSu2 := 0$ $vm := 0$ $Fax := 0$ $cases := 0$

$forces := READPRN(\text{"Beams-22-la.txt"})$

$j := 1 .. rows(forces)$ $id_j := forces_{j,1}$ $cases_j := forces_{j,2}$

$M1_j := forces_{j,3} \cdot in \cdot lbf$ $M2_j := forces_{j,4} \cdot in \cdot lbf$ $Tx_j := forces_{j,8} \cdot in \cdot lbf$ $cases_{j+rows(forces)} := forces_{j,2}$

$S1_j := forces_{j,5} \cdot lbf$ $S2_j := forces_{j,6} \cdot lbf$ $Fax_j := forces_{j,7} \cdot lbf$

$M1_{j+rows(forces)} := forces_{j,9} \cdot in \cdot lbf$

$M2_{j+rows(forces)} := forces_{j,10} \cdot in \cdot lbf$ $Tx_{j+rows(forces)} := forces_{j,8} \cdot in \cdot lbf$

$S2_{j+rows(forces)} := forces_{j,12} \cdot lbf$ $Fax_{j+rows(forces)} := forces_{j,7} \cdot lbf$

$S1_{j+rows(forces)} := forces_{j,11} \cdot lbf$

$id_{j+rows(forces)} := forces_{j,1}$

$cases_{j+rows(forces)} := forces_{j,2}$ $j := 1 .. rows(forces) \cdot 2$

$Fx := Fax$	$max(Fx) = 16.242\,lbf$	$min(Fx) = -27.946\,lbf$
$Fy := S1$	$max(Fy) = 2.394\,lbf$	$min(Fy) = -2.679\,lbf$
$Fz := S2$	$max(Fz) = 11.451\,lbf$	$min(Fz) = -17.412\,lbf$
$Mz := M1$	$max(Mz) = 4.487\,in\,lbf$	$min(Mz) = -2.734\,in\,lbf$
$My := -M2$	$max(My) = 6.325\,in\,lbf$	$min(My) = -6.334\,in\,lbf$
$T := Tx$	$max(T) = 1.774\,in\,lbf$	$min(T) = -2.748\,in\,lbf$

Rivet Hole Loads

$MaxTension_j := \sqrt{(Fz_j)^2}$	$max(MaxTension) = 17.412\,lbf$	$min(MaxTension) = 0.002\,lbf$
$MaxShear_j := \sqrt{(Fx_j)^2 + (Fy_j)^2}$	$max(MaxShear) = 28.074\,lbf$	$min(MaxShear) = 0.019\,lbf$

TRD Gas Ballistic Cover - Splice Plates SDG39137927/8/9, Landing, Fail-Safe

One Standoff Bracket to Box S Removed - Maximum Stresses on Cross Section

Normal is Direct Axial Plus Bending

$$_{i,j} := \frac{Fx_j}{A} + \frac{(My_j \cdot Iz + Mz_j \cdot Izy) \cdot cz_i}{Iy \cdot Iz - Izy^2} - \frac{(Mz_j \cdot Iy + My_j \cdot Izy) \cdot cy_i}{Iy \cdot Iz - Izy^2}$$

$\max(\ ) = \mathbf{5676.197}$ psi

Shear Due to Transverse Loading

$$uv_j := \sqrt{\left(\frac{Fy_j}{A}\right)^2 + \left(\frac{Fz_j}{A}\right)^2}$$

$\max(uv) = \mathbf{325.656}$ psi

Combined Shear

$$u_j := uv_j$$

$\max(u) = \mathbf{325.656}$ psi

Principal Stresses

$$p1_{i,j} := \frac{_{i,j}}{2} + \left[\left(\frac{_{i,j}}{2}\right)^2 + (u_j)^2\right]^{\frac{1}{2}}$$

$\max(\ p1) = \mathbf{5676.878}$ psi

Principal Stresses (cont.)

$$p2_{i,j} := \frac{_{i,j}}{2} - \left[\left(\frac{_{i,j}}{2}\right)^2 + (u_j)^2\right]^{\frac{1}{2}}$$

$\max(\ p2) = \mathbf{-0.001}$ psi

Von-Mises Stress

$$vm_{i,j} := \sqrt{(\ p1_{i,j})^2 + (\ p2_{i,j})^2 - \ p1_{i,j} \cdot \ p2_{i,j}}$$

$\max(\ vm) = \mathbf{6714.495}$ psi

Maximum Shear Stress

$$umax_{i,j} := \sqrt{\frac{1}{4} \cdot (\ _{i,j})^2 + (u_j)^2}$$

$\max(umax) = \mathbf{3357.391}$ psi

$$MSu1_{i,j} := \left(\frac{F_{tug}}{FS_u \cdot \left|\overrightarrow{\ p1_{i,j}}\right|}\right) - 1$$

$\min(MSu1) = \mathbf{6.1}$

$$MSu2_{i,j} := \left(\frac{F_{tug}}{FS_u \cdot \left|\overrightarrow{\ p2_{i,j}}\right|}\right) - 1$$

$\min(MSu2) = \mathbf{5.005}$

TRD Gas Ballistic Cover - Splice Plates SDG39137927/8/9, Landing, Fail-Safe

One Standoff Bracket to Box S Removed - Margins of Safety

$MSu_{i,j} := \min(MSu1_{i,j}, MSu2_{i,j})$ $\min(MSu) = \mathbf{5.005}$ ***...Ultimate (using Principal)***

$MSy_{i,j} := \left(\frac{F_{tyg}}{FS_y \cdot vm_{i,j}}\right) - 1$ $\min(MSy) = \mathbf{4.15}$ ***...Yield (using Von-Mises)***

$MSsu_{i,j} := \left(\frac{F_{sug}}{FS_u \cdot umax_{i,j}}\right) - 1$ $\min(MSsu) = \mathbf{6.72}$ ***...Ultimate (Shear)***

TRD Gas Ballistic Cover - Splice Plates SDG39137927/8/9, Liftoff

64 Liftoff Conditions - Loads

Zero Out All Variables

$M2 := 0$ $S1 := 0$ $M1 := 0$ $S2 := 0$ $MSu := 0$ $umax := 0$ $p1 := 0$ $uv := 0$

$u := 0$ $MaxShear := 0$ $MSy := 0$ $MSu1 := 0$ $p2 := 0$ $Tx := 0$ $id := 0$

$\ := 0$ $MaxTension := 0$ $MSsu := 0$ $MSu2 := 0$ $vm := 0$ $Fax := 0$ $cases := 0$

$forces := READPRN(\text{"Beams-20-lo.txt"})$

$j := 1 .. rows(forces)$ $id_j := forces_{j,1}$ $cases_j := forces_{j,2}$

$M1_j := forces_{j,3} \cdot in \cdot lbf$ $M2_j := forces_{j,4} \cdot in \cdot lbf$ $Tx_j := forces_{j,8} \cdot in \cdot lbf$ $cases_{j+rows(forces)} := forces_{j,2}$

$S1_j := forces_{j,5} \cdot lbf$ $S2_j := forces_{j,6} \cdot lbf$ $Fax_j := forces_{j,7} \cdot lbf$

$M1_{j+rows(forces)} := forces_{j,9} \cdot in \cdot lbf$

$M2_{j+rows(forces)} := forces_{j,10} \cdot in \cdot lbf$ $Tx_{j+rows(forces)} := forces_{j,8} \cdot in \cdot lbf$

$S2_{j+rows(forces)} := forces_{j,12} \cdot lbf$ $Fax_{j+rows(forces)} := forces_{j,7} \cdot lbf$

$S1_{j+rows(forces)} := forces_{j,11} \cdot lbf$

$id_{j+rows(forces)} := forces_{j,1}$

$cases_{j+rows(forces)} := forces_{j,2}$ $j := 1 .. rows(forces) \cdot 2$

$Fx := Fax$ $max(Fx) = 10.548\,lbf$ $min(Fx) = -9.216\,lbf$

$Fy := S1$ $max(Fy) = 1.556\,lbf$ $min(Fy) = -1.559\,lbf$

$Fz := S2$ $max(Fz) = 6.21\,lbf$ $min(Fz) = -7.363\,lbf$

$Mz := M1$ $max(Mz) = 1.555\,in\,lbf$ $min(Mz) = -1.188\,in\,lbf$

$My := -M2$ $max(My) = 2.358\,in\,lbf$ $min(My) = -2.359\,in\,lbf$

$T := Tx$ $max(T) = 0.921\,in\,lbf$ $min(T) = -0.923\,in\,lbf$

Rivet Hole Loads

$MaxTension_j := \sqrt{(Fz_j)^2}$ $max(MaxTension) = 7.363\,lbf$ $min(MaxTension) = 0.001\,lbf$

$MaxShear_j := \sqrt{(Fx_j)^2 + (Fy_j)^2}$ $max(MaxShear) = 10.548\,lbf$ $min(MaxShear) = 0.03\,lbf$

TRD Gas Ballistic Cover - Splice Plates SDG39137927/8/9, Liftoff

64 Liftoff Conditions - Maximum Stresses on Cross Section

Normal is Direct Axial Plus Bending

$$_{i,j} := \frac{Fx_j}{A} + \frac{(My_j \cdot Iz + Mz_j \cdot Izy) \cdot cz_i}{Iy \cdot Iz - Izy^2} - \frac{(Mz_j \cdot Iy + My_j \cdot Izy) \cdot cy_i}{Iy \cdot Iz - Izy^2}$$

$\max(\ ) = \mathbf{2404.391}$ psi

Shear Due to Transverse Loading

$$uv_j := \sqrt{\left(\frac{Fy_j}{A}\right)^2 + \left(\frac{Fz_j}{A}\right)^2}$$

$\max(uv) = \mathbf{136.778}$ psi

Combined Shear

$$u_j := uv_j$$

$\max(u) = \mathbf{136.778}$ psi

Principal Stresses

$$p1_{i,j} := \frac{_{i,j}}{2} + \left[\left(\frac{_{i,j}}{2}\right)^2 + (u_j)^2\right]^{\frac{1}{2}}$$

$\max(\ p1) = \mathbf{2404.695}$ psi

Principal Stresses (cont.)

$$p2_{i,j} := \frac{_{i,j}}{2} - \left[\left(\frac{_{i,j}}{2}\right)^2 + (u_j)^2\right]^{\frac{1}{2}}$$

$\max(\ p2) = \mathbf{-0.001}$ psi

Von-Mises Stress

$$vm_{i,j} := \sqrt{(\ p1_{i,j})^2 + (\ p2_{i,j})^2 - \ p1_{i,j} \cdot \ p2_{i,j}}$$

$\max(\ vm) = \mathbf{2404.847}$ psi

Maximum Shear Stress

$$umax_{i,j} := \sqrt{\frac{1}{4} \cdot (\ _{i,j})^2 + (u_j)^2}$$

$\max(umax) = \mathbf{1202.499}$ psi

$$MSu1_{i,j} := \left(\frac{F_{tug}}{FS_u \cdot \left|\overrightarrow{\ p1_{i,j}}\right|}\right) - 1$$

$\min(MSu1) = \mathbf{15.77}$

$$MSu2_{i,j} := \left(\frac{F_{tug}}{FS_u \cdot \left|\overrightarrow{\ p2_{i,j}}\right|}\right) - 1$$

$\min(MSu2) = \mathbf{15.856}$

TRD Gas Ballistic Cover - Splice Plates SDG39137927/8/9, Liftoff

64 Liftoff Conditions - Margins of Safety

$MSu_{i,j} := \min(MSu1_{i,j}, MSu2_{i,j})$ $\min(MSu) = \mathbf{15.767}$ ***...Ultimate (using Principal)***

$MSy_{i,j} := \left(\frac{F_{tyg}}{FS_y \cdot vm_{i,j}}\right) - 1$ $\min(MSy) = \mathbf{13.371}$ ***...Yield (using Von-Mises)***

$MSsu_{i,j} := \left(\frac{F_{sug}}{FS_u \cdot umax_{i,j}}\right) - 1$ $\min(MSsu) = \mathbf{20.555}$ ***...Ultimate (Shear)***

TRD Gas Ballistic Cover - Splice Plates SDG39137927/8/9, Liftoff, Fail-Safe

One Splice Plate Removed - Loads

Zero Out All Variables

$M2 := 0$ $S1 := 0$ $M1 := 0$ $S2 := 0$ $MSu := 0$ $umax := 0$ $p1 := 0$ $uv := 0$

$u := 0$ $MaxShear := 0$ $MSy := 0$ $MSu1 := 0$ $p2 := 0$ $Tx := 0$ $id := 0$

$:= 0$ $MaxTension := 0$ $MSsu := 0$ $MSu2 := 0$ $vm := 0$ $Fax := 0$ $cases := 0$

$forces := READPRN(\text{"Beams-21-lo.txt"})$

$j := 1 .. rows(forces)$ $id_j := forces_{j,1}$ $cases_j := forces_{j,2}$

$M1_j := forces_{j,3} \cdot in \cdot lbf$ $M2_j := forces_{j,4} \cdot in \cdot lbf$ $Tx_j := forces_{j,8} \cdot in \cdot lbf$ $cases_{j+rows(forces)} := forces_{j,2}$

$S1_j := forces_{j,5} \cdot lbf$ $S2_j := forces_{j,6} \cdot lbf$ $Fax_j := forces_{j,7} \cdot lbf$

$M1_{j+rows(forces)} := forces_{j,9} \cdot in \cdot lbf$

$M2_{j+rows(forces)} := forces_{j,10} \cdot in \cdot lbf$ $Tx_{j+rows(forces)} := forces_{j,8} \cdot in \cdot lbf$

$S2_{j+rows(forces)} := forces_{j,12} \cdot lbf$ $Fax_{j+rows(forces)} := forces_{j,7} \cdot lbf$

$S1_{j+rows(forces)} := forces_{j,11} \cdot lbf$

$id_{j+rows(forces)} := forces_{j,1}$

$cases_{j+rows(forces)} := forces_{j,2}$ $j := 1 .. rows(forces) \cdot 2$

$Fx := Fax$ $max(Fx) = 11.032\,lbf$ $min(Fx) = -9.254\,lbf$

$Fy := S1$ $max(Fy) = 1.624\,lbf$ $min(Fy) = -1.685\,lbf$

$Fz := S2$ $max(Fz) = 6.906\,lbf$ $min(Fz) = -5.341\,lbf$

$Mz := M1$ $max(Mz) = 1.639\,in\,lbf$ $min(Mz) = -1.504\,in\,lbf$

$My := -M2$ $max(My) = 2.691\,in\,lbf$ $min(My) = -2.694\,in\,lbf$

$T := Tx$ $max(T) = 1.076\,in\,lbf$ $min(T) = -1.052\,in\,lbf$

Rivet Hole Loads

$MaxTension_j := \sqrt{(Fz_j)^2}$ $max(MaxTension) = 6.906\,lbf$ $min(MaxTension) = 0.001\,lbf$

$MaxShear_j := \sqrt{(Fx_j)^2 + (Fy_j)^2}$ $max(MaxShear) = 11.036\,lbf$ $min(MaxShear) = 0.033\,lbf$

TRD Gas Ballistic Cover - Splice Plates SDG39137927/8/9, Liftoff, Fail-Safe

One Splice Plate Removed - Maximum Stresses on Cross Section

Normal is Direct Axial Plus Bending

$$i,j := \frac{Fx_j}{A} + \frac{(My_j \cdot Iz + Mz_j \cdot Izy) \cdot cz_i}{Iy \cdot Iz - Izy^2} - \frac{(Mz_j \cdot Iy + My_j \cdot Izy) \cdot cy_i}{Iy \cdot Iz - Izy^2}$$

$\max(\ ) = \mathbf{2771.204}$ psi

Shear Due to Transverse Loading

$$uv_j := \sqrt{\left(\frac{Fy_j}{A}\right)^2 + \left(\frac{Fz_j}{A}\right)^2}$$

$\max(uv) = \mathbf{128.754}$ psi

Combined Shear

$$u_j := uv_j$$

$\max(u) = \mathbf{128.754}$ psi

Principal Stresses

$$p1_{i,j} := \frac{i,j}{2} + \left[\left(\frac{i,j}{2}\right)^2 + (u_j)^2\right]^{\frac{1}{2}}$$

$\max(\ p1) = \mathbf{2771.588}$ psi

Principal Stresses (cont.)

$$p2_{i,j} := \frac{i,j}{2} - \left[\left(\frac{i,j}{2}\right)^2 + (u_j)^2\right]^{\frac{1}{2}}$$

$\max(\ p2) = \mathbf{-0.004}$ psi

Von-Mises Stress

$$vm_{i,j} := \sqrt{(\ p1_{i,j})^2 + (\ p2_{i,j})^2 - \ p1_{i,j} \cdot \ p2_{i,j}}$$

$\max(\ vm) = \mathbf{2771.78}$ psi

Maximum Shear Stress

$$umax_{i,j} := \sqrt{\frac{1}{4} \cdot (\ i,j)^2 + (u_j)^2}$$

$\max(umax) = \mathbf{1385.986}$ psi

$$MSu1_{i,j} := \left(\frac{F_{tug}}{FS_u \cdot \left|\overrightarrow{\ p1_{i,j}}\right|}\right) - 1$$

$\min(MSu1) = \mathbf{13.55}$

$$MSu2_{i,j} := \left(\frac{F_{tug}}{FS_u \cdot \left|\overrightarrow{\ p2_{i,j}}\right|}\right) - 1$$

$\min(MSu2) = \mathbf{15.425}$

TRD Gas Ballistic Cover - Splice Plates SDG39137927/8/9, Liftoff, Fail-Safe

One Splice Plate Removed - Margins of Safety

$MSu_{i,j} := \min(MSu1_{i,j}, MSu2_{i,j})$ $\min(MSu) = \mathbf{13.548}$ ***...Ultimate (using Principal)***

$MSy_{i,j} := \left(\frac{F_{tyg}}{FS_y \cdot vm_{i,j}}\right) - 1$ $\min(MSy) = \mathbf{11.47}$ ***...Yield (using Von-Mises)***

$MSsu_{i,j} := \left(\frac{F_{sug}}{FS_u \cdot umax_{i,j}}\right) - 1$ $\min(MSsu) = \mathbf{17.7}$ ***...Ultimate (Shear)***

TRD Gas Ballistic Cover - Splice Plates SDG39137927/8/9, Liftoff, Fail-Safe

One Standoff Bracket to Box S Removed - Loads

Zero Out All Variables

$M2 := 0$ $S1 := 0$ $M1 := 0$ $S2 := 0$ $MSu := 0$ $umax := 0$ $p1 := 0$ $uv := 0$

$u := 0$ $MaxShear := 0$ $MSy := 0$ $MSu1 := 0$ $p2 := 0$ $Tx := 0$ $id := 0$

$:= 0$ $MaxTension := 0$ $MSsu := 0$ $MSu2 := 0$ $vm := 0$ $Fax := 0$ $cases := 0$

forces := READPRN("**Beams-22-lo.txt**")

$j := 1 .. rows(forces)$ $id_j := forces_{j,1}$ $cases_j := forces_{j,2}$

$M1_j := forces_{j,3} \cdot in \cdot lbf$ $M2_j := forces_{j,4} \cdot in \cdot lbf$ $Tx_j := forces_{j,8} \cdot in \cdot lbf$ $cases_{j+rows(forces)} := forces_{j,2}$

$S1_j := forces_{j,5} \cdot lbf$ $S2_j := forces_{j,6} \cdot lbf$ $Fax_j := forces_{j,7} \cdot lbf$

$M1_{j+rows(forces)} := forces_{j,9} \cdot in \cdot lbf$

$M2_{j+rows(forces)} := forces_{j,10} \cdot in \cdot lbf$ $Tx_{j+rows(forces)} := forces_{j,8} \cdot in \cdot lbf$

$S2_{j+rows(forces)} := forces_{j,12} \cdot lbf$ $Fax_{j+rows(forces)} := forces_{j,7} \cdot lbf$

$S1_{j+rows(forces)} := forces_{j,11} \cdot lbf$

$id_{j+rows(forces)} := forces_{j,1}$

$cases_{j+rows(forces)} := forces_{j,2}$ $j := 1 .. rows(forces) \cdot 2$

$Fx := Fax$ $max(Fx) = 11.822\,lbf$ $min(Fx) = -13.191\,lbf$

$Fy := S1$ $max(Fy) = 2.497\,lbf$ $min(Fy) = -2.586\,lbf$

$Fz := S2$ $max(Fz) = 9.172\,lbf$ $min(Fz) = -8.215\,lbf$

$Mz := M1$ $max(Mz) = 2.637\,in\,lbf$ $min(Mz) = -2.07\,in\,lbf$

$My := -M2$ $max(My) = 3.472\,in\,lbf$ $min(My) = -3.47\,in\,lbf$

$T := Tx$ $max(T) = 1.802\,in\,lbf$ $min(T) = -1.864\,in\,lbf$

Rivet Hole Loads

$MaxTension_j := \sqrt{(Fz_j)^2}$ $max(MaxTension) = 9.172\,lbf$ $min(MaxTension) = 0\,lbf$

$MaxShear_j := \sqrt{(Fx_j)^2 + (Fy_j)^2}$ $max(MaxShear) = 13.442\,lbf$ $min(MaxShear) = 0.088\,lbf$

TRD Gas Ballistic Cover - Splice Plates SDG39137927/8/9, Liftoff, Fail-Safe

One Standoff Bracket to Box S Removed - Maximum Stresses on Cross Section

Normal is Direct Axial Plus Bending

$$_{i,j} := \frac{Fx_j}{A} + \frac{(My_j \cdot Iz + Mz_j \cdot Izy) \cdot cz_i}{Iy \cdot Iz - Izy^2} - \frac{(Mz_j \cdot Iy + My_j \cdot Izy) \cdot cy_i}{Iy \cdot Iz - Izy^2}$$

$\max(\ ) = \mathbf{3194.14}$ psi

Shear Due to Transverse Loading

$$uv_j := \sqrt{\left(\frac{Fy_j}{A}\right)^2 + \left(\frac{Fz_j}{A}\right)^2}$$

$\max(uv) = \mathbf{172}$ psi

Combined Shear

$$u_j := uv_j$$

$\max(u) = \mathbf{172}$ psi

Principal Stresses

$$p1_{i,j} := \frac{_{i,j}}{2} + \left[\left(\frac{_{i,j}}{2}\right)^2 + (u_j)^2\right]^{\frac{1}{2}}$$

$\max(\ p1) = \mathbf{3197.401}$ psi

Principal Stresses (cont.)

$$p2_{i,j} := \frac{_{i,j}}{2} - \left[\left(\frac{_{i,j}}{2}\right)^2 + (u_j)^2\right]^{\frac{1}{2}}$$

$\max(\ p2) = -\mathbf{0.001}$ psi

Von-Mises Stress

$$vm_{i,j} := \sqrt{(\ p1_{i,j})^2 + (\ p2_{i,j})^2 - \ p1_{i,j} \cdot \ p2_{i,j}}$$

$\max(\ vm) = \mathbf{3561.7}$ psi

Maximum Shear Stress

$$umax_{i,j} := \sqrt{\frac{1}{4} \cdot (\ _{i,j})^2 + (u_j)^2}$$

$\max(umax) = \mathbf{1781.369}$ psi

$$MSu1_{i,j} := \left(\frac{F_{tug}}{FS_u \cdot \left|\overrightarrow{\ p1_{i,j}}\right|}\right) - 1$$

$\min(MSu1) = \mathbf{11.61}$

$$MSu2_{i,j} := \left(\frac{F_{tug}}{FS_u \cdot \left|\overrightarrow{\ p2_{i,j}}\right|}\right) - 1$$

$\min(MSu2) = \mathbf{10.324}$

TRD Gas Ballistic Cover - Splice Plates SDG39137927/8/9, Liftoff, Fail-Safe

One Standoff Bracket to Box S Removed - Margins of Safety

$MSu_{i,j} := \min(MSu1_{i,j}, MSu2_{i,j})$ $\min(MSu) = \mathbf{10.324}$ ***...Ultimate (using Principal)***

$MSy_{i,j} := \left(\frac{F_{tyg}}{FS_y \cdot vm_{i,j}}\right) - 1$ $\min(MSy) = \mathbf{8.703}$ ***...Yield (using Von-Mises)***

$MSsu_{i,j} := \left(\frac{F_{sug}}{FS_u \cdot umax_{i,j}}\right) - 1$ $\min(MSsu) = \mathbf{13.551}$ ***...Ultimate (Shear)***

CHECK

Note: Figure is for reference only. Not to scale. Actual joint made differ. Washer may be on nut side, head side, or both.

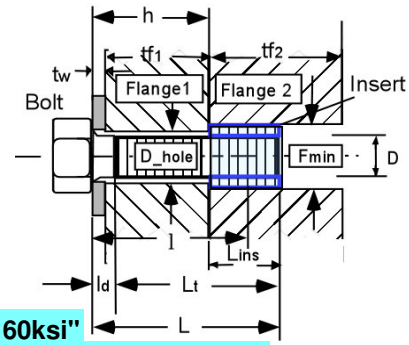

Bolt := **"NAS 1351N3LB10, .1900-32, .625L, HRES A286, Self Locking, Passivate, 160ksi"**
Washer := **"NAS 1149E0332R, .438 OD, .203 ID, .032 THK, Countersunk, CRES A286, 160ksi, Passivate"**
Insert := **"PEM SOS-032-16-Passivated, .1900-32, .495L, 303 Stainless Steel, Thru-Hole Threaded Standoff"**

Flange_1 := **"Standoff Bracket A"**
Part_Number_1 := **"SDG39137917-001"**
Material_1 := **"AL ALY 7075-T7351, AMS-QQ-Q-250/12, Plate, 0.80 Thk, A"**
edge1 := **0.500**·in *(Minimum Edge Distance of Flange 1)*

Flange_2 := **"TRD Gas Ballistic Cover - Inner Skin"**
Part_Number_2 := **"SLG39137916-502"**
Material_2 ≡ **"AL ALY 6061-T6, SAE-AMS-4027, Sheet, 0.050 Thk, A"**
edge2 := **0.500**·in *(Minimum Edge Distance of Flange 2)*

Methodology

The TRD Gas Ballistic Cover, SLG39137916-701, is attached to Box S with (3) Standoff Bracket A, SDG39137917-001, and (1) Standoff Bracket B, SDG39137918-301. All 4 brackets are AL ALY 7075-T7351. Each Standoff Bracket attaches to the Ballistic Cover by (2) NAS 1351N3LB10 fasteners with NAS 1587A3C washers, going into SOS-032-16 Self Clinching Standoffs in the TRD Gas Ballistic Cover.

A stand-alone FEM of the TRD Gas Ballistic Cover and Standoff Brackets was created. It was constrained at the 4 attachment points to Box S. Twenty-four g-load combinations, using the 40 (g) Load Factor from Table 4-4: Launch/Landing Design Limit Load Factors for Small Secondary Structures, JSC-28792, Rev. E, were analyzed.

The attachments between the Standoff Brackets and the TRD Gas Ballistic Cover are represented by Spider RBE3's (with the center dependent node given 6 dof T1 T2 T3 R1 R2 R3, and the outer independent nodes given T1 T2 T3) in the fastner holes of each flange, connected by CBush elements. The fastener loads between the Standoff Brackets and Cover are recovered as CBush Forces.

The largest absolute CBush Axial (P) load and the largest absolute Cbush Total Shear (V) load, are enveloped across all 4 Standoff Brackets, for all 24 load cases, and then used to calculate the Margins of Safety for the joints. Since each Bracket attaches to the Cover with two fasteners, for Fail-Safe Analysis, the worst case Axial and Total Shear loads were doubled and then used to calculate the Fail-Safe Margins of Safety for the joints.

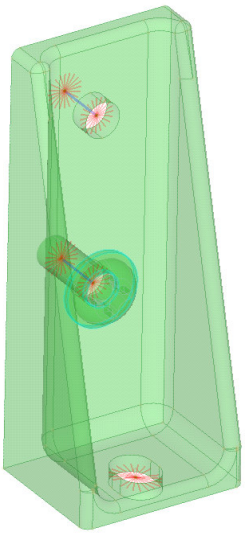

Allowables

Factors of Safety (reference)

$SFu := 2.00$ *(Ultimate Factor of Safety)*

$SFy := 1.25$ *(Yield Factor of Safety)*

$FF := 1.15$ *(Fitting Factor)*

$SFsep := 1.20$ *(Joint Separation)*

Temperature Data (reference)

$Temp_initial := 70 \cdot deg$ *(Assembly)*

$Temp_max := 140 \cdot deg$ *(Maximum)*

$Temp_min := -76 \cdot deg$ *(Minimum)*

Note: These are maximum temperatures that hardware sees. If maximum load occurs at a different temperature, this will be conservative.

Bolt Data (Bolt = **"NAS 1351N3LB10, .1900-32, .625L, HRES A286, Self Locking, Passivate, 160ksi"**)

$D := .1900 \cdot in$ *(Nominal Diameter of Bolt)*

$Nt := 32 \cdot \frac{1}{in}$ *(Number of Threads/Inch)*

$D_shank := .1840 \cdot in$ *(Shank Diameter of Bolt)*

Note: If there is a retainer groove in the fastener, this should be the calculated diameter to give an equivalent cross sectional area.

$L := 0.625 \cdot in$ *(Total Length of Bolt)*

$Lt := 0.625 \cdot in$ *(Threaded Length - bolt is fully threaded, input Lt = L)*

$dw := 0.303 \cdot in$ *(Bolt Head Dia. Across Flats - dia of pressure boss if it exists, otherwise dia of head)*

$bh := 0.185 \cdot in$ *(Bolt Head Height - head height is 0 if bolt is flat head)*

Thread data lookup table is hidden
This file uses the data shown in \\escfil02\2i11_mathcad\8307_bolts\Rev_D\thread_data.mcd

Fri Apr 27 14:11:39 2007

Bolt Data (Bolt = **"NAS 1351N3LB10, .1900-32, .625L, HRES A286, Self Locking, Passivate, 160ksi"**)

$TSu_bolt := 0.98$ $TSy_bolt := 0.98$ *(Temperature Correction Factor for Bolt Strength)*

$Ftu_bolt := 160000 \cdot psi$ $Fty_bolt := 120000 \cdot psi$ *(Bolt Ultimate Tensile Allowable Stress)*

$Fsu_bolt := 0.6 \cdot Ftu_bolt$ *(Bolt Ultimate Shear Allowable Stress)*

$TE_bolt := 0.98$ *(Temperature Correction Factor for Bolt Modulus)*

$E_bolt := \left(29.1 \cdot 10^{6} \cdot psi\right)$ *(Modulus of Elasticity of Bolt)*

$\beta_bolt_hot := 9.1 \cdot 10^{-6} \cdot \frac{\frac{in}{in}}{deg}$ $\beta_bolt_cold := 8.5 \cdot 10^{-6} \cdot \frac{\frac{in}{in}}{deg}$ *(Thermal Coefficients for Bolt)*

Washer Data (

Washer = **"NAS 1149E0332R, .438 OD, .203 ID, .032 THK, Countersunk, CRES A286, 160ksi, Passivate"** ***)***

Thickness of Washers

$tw := 0.032 \cdot in$ $L_{unthreaded} := 0.197 \cdot in$

$twh := tw + L_{unthreaded}$ $twh = 0.229\,in$ *(Head)*

Note: This is the total washer thickness, if there are more than one. USING THICKNESS OF WASHER (tw) + UNTHREADED LENGTH OF STANDOFF ($L_{unthreaded}$). (see dimension D in picture below).

Diameter of Washer Under Head

$Dwoh := 0.275\,in$ *(Outer - Limited to Minimum External Diamieter of Standoff)*

$Dwih := 0.203 \cdot in$ *(Inner)*

Modulus of Elasticity

$E_washerh := \left(29.1 \cdot 10^{6} \cdot psi\right)$ *(Head)*

Temperature Correction Factor for Modulus

$TE_washerh := 0.98$ *(Head)* [same as bolt]

Insert Data (

Insert = **"PEM SOS-032-16-Passivated, .1900-32, .495L, 303 Stainless Steel, Thru-Hole Threaded Standoff"** ***)***

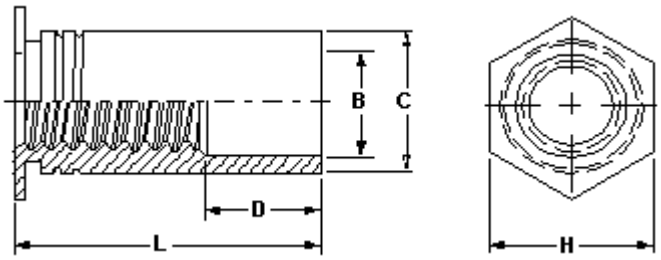


```
Note:
Assuming Lins = Threaded Length of Standoff
              = L - D
 .500 Length of Standoff, "L"
-.005 Tolerance
 .495
-.187 Unthreaded Length of Standoff, "D"
-.010 Tolerance
 .298 Threaded Length of Standoff = Lins
Minimum External Diameter = C - .005 = .275 in.
```

$Lins := 0.298 \cdot in$ *(USING THREADED LENGTH OF STANDOFF, L - D, See Appendix A28.7.4)*

$Fmin := 0.275 \cdot in$ *(Min. External Diameter of Insert)*

$lr := 0.020 \cdot in$ *(Depth of Recess for Insert)*

$TS_ins := 0.98$ *(Temperature Correction Factor for Insert Strength)*

$Ftu_ins := 73000 \cdot psi$ *(Ultimate Tensile Allowable Stress)*

$Fsu_ins := 0.6 \cdot Ftu_ins$ *(Ultimate Shear Allowable Stress)*

Note: CONDITION/TEMPER UNKNOWN. Could be Annealed, 1/4 1/2 3/4 or Full Hard. So, assuming the weakest, Annealed.

Flange data (Stiffness of the joint depends upon number of members in the grip of the fasteners & their material properties)

Flange_1 = **"Standoff Bracket A"**

Material_1 = **"AL ALY 7075-T7351, AMS-QQ-Q-250/12, Plate, 0.80 Thk, A"**

Flange_2 = **"TRD Gas Ballistic Cover - Inner Skin"**

Material_2 = **"AL ALY 6061-T6, SAE-AMS-4027, Sheet, 0.050 Thk, A"**

$D_hole := 0.213 \cdot in$ *(Diameter of Thru Hole in Flange 2)*

Thickness of Flanges

$tf1 := 0.120 \cdot in$

$tf2 := 0.050 in$

Compressive Modulus of Elasticity

$E_flange1 := \left(10.6 \cdot 10^{6} \cdot psi\right)$

$E_flange2 := \left(10.1 \cdot 10^{6} \cdot psi\right)$

Temperature Correction Factor (Modulus)

$Tf1E := 0.98$

$Tf2E := 0.98$

Coefficient of thermal expansion for Flanges

$\beta_flange1_hot := 12.5 \cdot 10^{-6} \cdot \frac{\frac{in}{in}}{deg}$

$\beta_flange2_hot := 12.8 \cdot 10^{-6} \cdot \frac{\frac{in}{in}}{deg}$

$\beta_flange1_cold := 12.1 \cdot 10^{-6} \cdot \frac{\frac{in}{in}}{deg}$

$\beta_flange2_cold := 12.1 \cdot 10^{-6} \cdot \frac{\frac{in}{in}}{deg}$

$Fsu_f2 := 27000 \cdot psi$ *(Shear Strength of Flange 2, with Temperature Reduction)*

$Tf2s := 0.96$ *(If Unavailable, Use Temperature Reduction Factor for Ftu)*

Applied Loads (reference)

P := **52.1**lbf *(Tensile)*

CBush: ABS Axial Force - Standoff Brackets

ID	SUBCASE	AXIAL	SHEAR	MX	MY	MZ
6000005	2013	-5.214979E+01	5.886861E+01	1.280827E+01	-5.820033E+00	6.113555E+00

V := **71.7**lbf *(Shear)*

CBush: MAG Shear Force - Standoff Brackets

ID	SUBCASE	AXIAL	SHEAR	MX	MY	MZ
6000005	2030	-4.548164E+01	7.166499E+01	1.542840E+01	-6.799858E+00	5.152246E+00

M := **0.0**in·lbf *(Bending)*

(See A28.7.1.1 Fasteners - CBUSH Forces - Landing)

Torque/Preload

(Shigley's "Mechanical Engineering Design")

Tmax := **25.6**·in·lbf *(Maximum Torque)*

Tmin := **21.8**in·lbf *(Minimum Torque)*

n := **0.5** *(Loading Plane Factor)*

Note: Per PEM Bulletin SO 1206, page SO-11, Maximum Recommended Tightening Torque for Mating Screw is 25.6 in-lbf, which is 38.9% of Yield. A Self-Locking fastener is being used.

Joint is lubed/dry

u := **0.25** *(Preload Uncertainty - 0.25 lubed/0.35 dry)*

k := **0.15** *(Torque Coefficient - 0.15 lubed/0.20 dry)*

Stiffness and Margin calculations are hidden

This file uses calculations shown in \\escfil02\2i11_mathcad\8307_bolts\Rev_D\bolt_insert_stiffness.mcd

Fri Apr 27 14:11:53 2007

Bolt Load

= **0.436** *(Bolt/Joint Stiffness Factor)*

Pthr_pos = **22.8** lbf *(Preload Due to Temperature)*

PLDmax = **1146** lbf *(Max. Preload)*

Pthr_neg = –**49.1** lbf

PLDmin = **468** lbf *(Min. Preload)*

PLDnom = **898** lbf *(Nom. Preload)*

u = **0.250** *(Uncertainty Factor)*

PLDratio = **0.397** *(Preload to Yield Ratio nom.)*

k = **0.150** *(Torque Coefficient)*

Psep = **62.520** lbf *(Joint Separation Load)*

n = **0.500** *(Loading Plane Factor)*

P = **52.100** lbf *(Applied Tensile Load on Bolt)*

V = **71.700** lbf *(Applied Shear on Bolt)*

M = **0.000** in·lbf *(Applied Bending on Bolt)*

Max. Load on Bolt with Preload and Factor of Safety

Pb = **1172** lbf *(Ultimate)*

Pby = **1162** lbf *(Yield)*

Max. Load on Bolt With Preload WithOut Factor of Safety

Pbapp = **1159** lbf

Bolt Allowables

PAt = **3018** lbf *(Bolt Ultimate Tensile Strength)* VAu = **1649** lbf *(Bolt Shear Strength)*

PAs = **3337** lbf *(Thread Pullout Strength)* MAu = **63** in·lbf *(Bolt Bending Strength)*

General Checks

length_check = **"Bolt length is sufficient and insert fully engaged"**

cone_check = **"Joint pressure cone does not extend pass flange edge"**

preload_check = **"WARNING: Nominal preload < 50% of bolt yield strength"**

washer_check = **"Washer(s) under head do not extend past flange"**

insert_check = **"NOTE: Insert extends past flange two--check dimensions"**

Note: This is because flange 2, the Ballistic Cover, is a half inch sandwich composite (.05 AL skin, .41 AL honeycomb core) but only the .05 AL inner skin resists pullout of the Self-Clinching Standoff.

Note: Per PEM Bulletin SO 1206, page SO-11, Maximum Recommended Tightening Torque for Mating Screw is 25.6 in-lbf, which is 38.9% of Yield. A Self-Locking fastener is being used.

Margin of Safety for Standoff Pull-Thru

Insert = **"PEM SOS-032-16-Passivated, .1900-32, .495L, 303 Stainless Steel, Thru-Hole Threaded Standoff"**

Note: For 0.060 inch thick AL 5052-H34 sheet, Pull-Thru Allowable = 464 lbf.
For sheet thickness < 0.060 inch, must use 80%.
Reference: Footnote (2), page SO-11, PEM Bulletin SO 1206 and PennEngineering, Fastener Test Specifications, FTS-104 (SO) Rev E, 4/22/2005.pdf.

PullThru_5052H34_060 := **464**·lbf *(AL 5052-H34, 0.060 Inch Thick Sheet)*

PullThru_5052H34_050 := **80**%·PullThru_5052H34_060

PullThru_5052H34_050 = **371.200** lbf *(AL 5052-H34, 0.050 Inch Thick Sheet)*

Fsu_6061T6 := **27**·ksi *(Shear Ultimate for 6061-T6)*

Fsu_5052H34 := **20**·ksi *(Shear Ultimate for 5052-H34)*

$$PullThru_6061T6_050 := \frac{Fsu_6061T6}{Fsu_5052H34} \cdot PullThru_5052H34_050$$

PullThru_6061T6_050 = **501.120** lbf *(AL 6061-T6, 0.050 Inch Thick Sheet)*

$$MS_PullThru_6061T6_050 := \frac{PullThru_6061T6_050}{P \cdot SFu \cdot FF} - 1$$

MS_PullThru_6061T6_050 = **3.182** ***... Standoff Pull-Thru Ultimate***

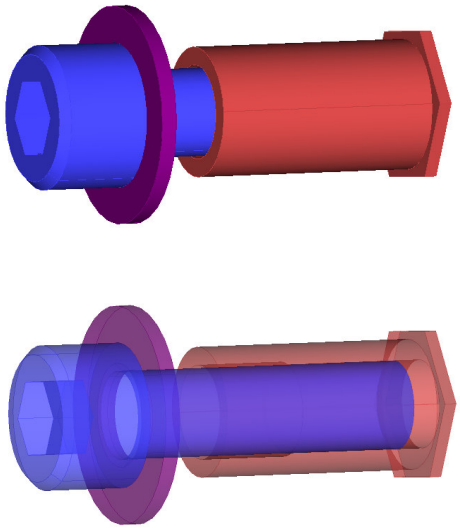

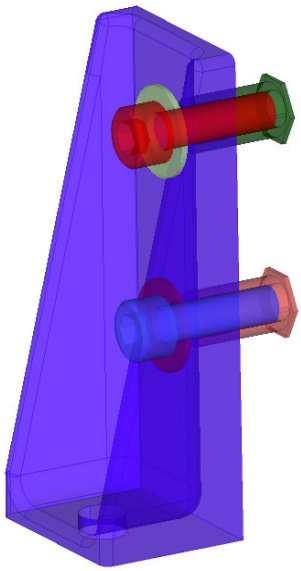

Summary of Margins for Bolt

MS_1 = **7.33**	***...Joint Separation***	MS_6 = **26.84**	***...Direct Thread Shear Ultimate***
MS_2 = **24.19**	***...Direct Tension Ultimate***	MS_7 = **1.85**	***...Total Thread Shear Ultimate***
MS_3 = **29.22**	***...Direct Tension Yield***	MS_8 = **9**	***...Shear Ultimate***
MS_4 = **1.58**	***...Total Tension Ultimate***	MS_9 = **100**	***...Bending Ultimate***
MS_5 = **0.95**	***...Total Tension Yield***	MS_{10} = **1.55**	***...Combined Shear, Tension and Bending Ultimate***

Smallest Margin of Safety for Bolt and Failure Mode

MS_5 = **0.95** ***...Total Tension Yield***

Note: The default MS7, Total Thread Shear Ultimate, calculation used by this Bolt Analysis Tempate, Rev. D, is not valid for this analysis because this insert/standoff is installed by pressing (embedding) the standoff's hex head flush in the AL Sheet Inner Skin. This insert is NOT threaded into the flange as the default calculation assumes.

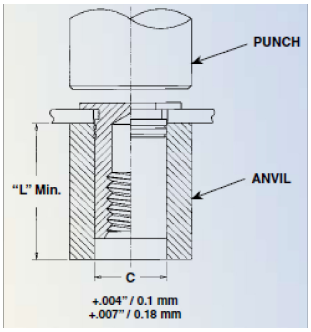

Fail-Safe Analysis

Fail-Safe Loads *(See A28.7.1.15.1 One Splice Plate Removed, Landing & Liftoff)*

$P_FS := 55.717 \cdot lbf$ *(Applied Tensile)*

$V_FS := 77.195 \cdot lbf$ *(Applied Shear)*

$M_FS := 0.0 \cdot in \cdot lbf$ *(Applied Bending)*

CBush: ABS Axial Force - Standoff Brackets

ID	SUBCASE	AXIAL	SHEAR	MX	MY	MZ
6000006	2030	-5.571735E+01	1.274937E+01	-3.635549E-01	3.725737E-02	7.099232E+0(

CBush: MAG Shear Force - Standoff Brackets

ID	SUBCASE	AXIAL	SHEAR	MX	MY	MZ
6000005	2030	-3.173613E+01	7.719511E+01	1.765853E+01	-1.349644E+01	3.930835E+0(

Fail-Safe Factors of Safety

$SFu_FS := 1.0$ *(Ultimate)*

$SFsep_FS := 1.0$ *(Joint Separation)*

Fri Apr 27 14:12:08 2007

Fail Safe Margin calculations are hidden / stiffness & allowable data is not recalculated
This file calculations shown in \\escfil02\2i11_mathcad\8307_bolts\Rev_D\bolt_insert_stiffness__FS.mcd

Bolt Fail-Safe Load Data

$Psep_FS = 55.717\ lbf$ *(Joint Separation Load)*

$Pb_FS = 1159.6\ lbf$ *(Max. Ultimate Load on Bolt)*

Fail-Safe Margin of Safety for Standoff Pull-Thru

$$MS_FS_PullThru_6061T6_050 := \frac{PullThru_6061T6_050}{P_FS \cdot SFu_FS \cdot FF} - 1$$

$MS_FS_PullThru_6061T6_050 = 6.821$ ***... Standoff Pull-Thru Ultimate***

Summary of Fail-Safe Margins for Bolt

$MS_FS_1 = 8.35$	***...Joint Separation***	$MS_FS_5 = 1.88$	***...Total Thread Shear Ultimate***
$MS_FS_2 = 46.1$	***...Direct Tension Ultimate***	$MS_FS_6 = 17.58$	***...Shear Ultimate***
$MS_FS_3 = 1.6$	***...Total Tension Ultimate***	$MS_FS_7 = 10.00$	***...Bending Ultimate***
$MS_FS_4 = 51.07$	***...Direct Thread Shear Ultimate***	$MS_FS_8 = 1.60$	***...Combined Shear, Tension, and Bending Ultimate***

Smallest Fail-Safe Margin of Safety for Bolt and Failure Mode

$MS_FS_8 = 1.60$ ***...Combined Shear, Tension, and Bending Ultimate***

Note: The default MS_FS5, Total Thread Shear Ultimate, calculation used by this Bolt Analysis Tempate, Rev. D, is not valid for this analysis because this insert/standoff is installed by pressing (embedding) the standoff's hex head flush in the AL Sheet Inner Skin. This insert is NOT threaded into the flange as the default calculation assumes.

Bolt Hole Analysis

Recall Loads From Bolt Calculation

Safety Factors	SFu = **2.00**	*(Ultimate)*	SFy = **1.250**	*(Yield)*
	FF = **1.150**	*(Fitting Factor)*		
Input Loads	V = **71.7** lbf	*(Shear Load)*	P = **52.1** lbf	*(Axial Load)*
Bolt Calc Results	Pb = **1172** lbf	*(Max Bolt Load)*		
Dimensions	L = **0.625** in	*(Length of Bolt)*	twh = **0.229** in	*(Thickness of Washer)*

Recall Bolt Hole Dimensions

$tf_1 := tf1$ $\quad tf_1 = \mathbf{0.120}\,in$ *(Entire Thickness of Flange 1)* $\quad Tf1E = \mathbf{0.980}$

$tf_2 := tf2$ $\quad tf_2 = \mathbf{0.050}\,in$ *(Entire Thickness of Flange 2)* $\quad Tf2E = \mathbf{0.980}$

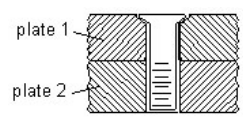

$edge_1 := edge1$ $\quad edge_1 = \mathbf{0.500}\,in$ *(Edge Distance for Hole in Flange 1)*

$edge_2 := edge2$ $\quad edge_2 = \mathbf{0.500}\,in$ *(Edge Distance for Hole in Flange 2)*

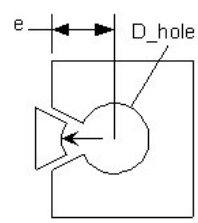

$D = \mathbf{0.190}\,in$ *(Diameter of Bolt)*

$D_shank = \mathbf{0.184}\,in$ *(Min. Shank Diameter of Bolt)*

$D_hole = \mathbf{0.213}\,in$ *(Diameter of Hole)*

Typical shear tear-out failure

Shear Tear-Out Check

Shear Area of the Mating Components (Ref. Analysis & Design of Flight Vehicle Structures, Bruhn, Pg. D1.5)

$$A_{shrpl} := \overrightarrow{\left[2\cdot tf\cdot\left(edge - \frac{1}{2}D_hole\right)\right]} \quad \begin{pmatrix}\text{Plate1}\\ \text{Plate2}\end{pmatrix} \qquad A_{shrpl} = \begin{pmatrix}\mathbf{0.094}\\ \mathbf{0.039}\end{pmatrix} in^2$$

Allowables for Flanges that Fastener Goes Through

$Fsu_1 := Tf1E\cdot \mathbf{38}\cdot ksi$ $\quad Fsu_1 = \mathbf{37.240}\,ksi$ *(Ultimate Shear Allowable for Flange 1)*

$Fsu_2 := Tf2E\cdot \mathbf{27}\cdot ksi$ $\quad Fsu_2 = \mathbf{26.460}\,ksi$ *(Ultimate Shear Allowable for Flange 2)*

$$P_{su} := \overrightarrow{\left(A_{shrpl}\cdot Fsu\right)} \qquad P_{su} = \begin{pmatrix}\mathbf{3517}\\ \mathbf{1041}\end{pmatrix} lbf$$ *(Shear Ultimate Allowable)*

Margin of Safety for Shear Tear-Out

$$MS_{su} := \overrightarrow{\left(\frac{P_{su}}{V\cdot SFu\cdot FF} - \mathbf{1}\right)} \quad \begin{pmatrix}\text{Plate1}\\ \text{Plate2}\end{pmatrix} \qquad MS_{su} = \begin{pmatrix}\mathbf{20.33}\\ \mathbf{5.31}\end{pmatrix}$$

$MS_{bh_1} := \min\left(MS_{su}\right)$ $\quad MS_{bh_1} = \mathbf{5.314}$ ***... Shear Tear-Out***

Bearing Check

Recall Bolt Hole Dimensions

$tf_1 = 0.120\,in$ *(Thickness of Flange 1)*

$tf_2 = 0.050\,in$ *(Thickness of Flange 2)*

$edge_1 = 0.500\,in$ *(Edge Distance for thru Hole in Flange 1)*

$edge_2 = 0.500\,in$ *(Edge Distance for tapped Hole in Flange 2)*

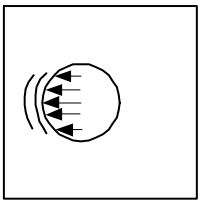

Typical Bearing Failure

$A_{br} := \overrightarrow{(tf \cdot \min(D, D_shank))}$ $\begin{pmatrix} \text{Plate1} \\ \text{Plate2} \end{pmatrix}$ $A_{br} = \begin{pmatrix} 0.022 \\ 0.009 \end{pmatrix} in^2$ *(Bearing Areas)*

$e_D := \overrightarrow{\frac{edge}{D_hole}}$ $e_D = \begin{pmatrix} 2.347 \\ 2.347 \end{pmatrix}$ *(e/D for Flanges)*

Bearing Allowables for Flanges that Fastener Goes Through

	Flange 1		Flange 2	
Fbru (e/D=1.5)	$Fbru15_1 := Tf1E \cdot 103 ksi$	$Fbru15_1 = 100.94\,ksi$	$Fbru15_2 := Tf2E \cdot 67 ksi$	$Fbru15_2 = 65.66\,ksi$
Fbru (e/D=2.0)	$Fbru20_1 := Tf1E \cdot 132 ksi$	$Fbru20_1 = 129.36\,ksi$	$Fbru20_2 := Tf2E \cdot 88 ksi$	$Fbru20_2 = 86.24\,ksi$
Fbry (e/D=1.5)	$Fbry15_1 := Tf1E \cdot 81 \cdot ksi$	$Fbry15_1 = 79.38\,ksi$	$Fbry15_2 := Tf2E \cdot 50 \cdot ksi$	$Fbry15_2 = 49\,ksi$
Fbry (e/D=2.0)	$Fbry20_1 := Tf1E \cdot 97 \cdot ksi$	$Fbry20_1 = 95.060\,ksi$	$Fbry20_2 := Tf2E \cdot 58 \cdot ksi$	$Fbry20_2 = 56.840\,ksi$

Modified Bearing Strength

$$Fbru_m_1 := if\left[e_D_1 > 2.0, Fbru20_1, if\left[(e_D_1 > 1.5)\cdot(e_D_1 < 2.0), Fbru15_1 + \frac{e_D_1 - 1.5}{2.0 - 1.5}\cdot(Fbru20_1 - Fbru15_1), \left[Fbru15_1\cdot(e_D_1 - 0.5)\right]\right]\right]$$

$$Fbru_m_2 := if\left[e_D_2 > 2.0, Fbru20_2, if\left[(e_D_2 > 1.5)\cdot(e_D_2 < 2.0), Fbru15_2 + \frac{e_D_2 - 1.5}{2.0 - 1.5}\cdot(Fbru20_2 - Fbru15_2), \left[Fbru15_2\cdot(e_D_2 - 0.5)\right]\right]\right]$$

$$Fbry_m_1 := if\left[e_D_1 > 2.0, Fbry20_1, if\left[(e_D_1 > 1.5)\cdot(e_D_1 < 2.0), Fbry15_1 + \frac{e_D_1 - 1.5}{2.0 - 1.5}\cdot(Fbry20_1 - Fbry15_1), \left[Fbry15_1\cdot(e_D_1 - 0.5)\right]\right]\right]$$

$$Fbry_m_2 := if\left[e_D_2 > 2.0, Fbry20_2, if\left[(e_D_2 > 1.5)\cdot(e_D_2 < 2.0), Fbry15_2 + \frac{e_D_2 - 1.5}{2.0 - 1.5}\cdot(Fbry20_2 - Fbry15_2), \left[Fbry15_2\cdot(e_D_2 - 0.5)\right]\right]\right]$$

$Fbru_m = \begin{pmatrix} 129.36 \\ 86.24 \end{pmatrix} ksi$ $\begin{pmatrix} \text{Plate1} \\ \text{Plate2} \end{pmatrix}$ *(Ultimate)*

$Fbry_m = \begin{pmatrix} 95.06 \\ 56.84 \end{pmatrix} ksi$ $\begin{pmatrix} \text{Plate1} \\ \text{Plate2} \end{pmatrix}$ *(Yield)*

$P_{bru} := \overrightarrow{(A_{br} \cdot Fbru_m)}$ $\quad P_{bru} = \begin{pmatrix} 2856 \\ 793 \end{pmatrix} lbf$ *(Bearing Ultimate Allowable)*

$P_{bry} := \overrightarrow{(A_{br} \cdot Fbry_m)}$ $\quad P_{bry} = \begin{pmatrix} 2099 \\ 523 \end{pmatrix} lbf$ *(Bearing Yield Allowable)*

Margin of Safety for Bearing Failure

$\mathbf{MS_{bru}} := \overrightarrow{\left(\frac{P_{bru}}{V \cdot SFu \cdot FF} - 1\right)}$ $\quad \mathbf{MS_{bru}} = \begin{pmatrix} 16.320 \\ 3.811 \end{pmatrix}$ $\begin{pmatrix} Plate1 \\ Plate2 \end{pmatrix}$

$MS_{bh_2} := \min(\mathbf{MS_{bru}})$ $\quad MS_{bh_2} = 3.811$ ***... Bearing Ultimate Strength***

$MS_{bry} := \overrightarrow{\left(\frac{P_{bry}}{V \cdot SFy \cdot FF} - 1\right)}$ $\quad MS_{bry} = \begin{pmatrix} 19.36 \\ 4.07 \end{pmatrix}$ $\begin{pmatrix} Plate1 \\ Plate2 \end{pmatrix}$

$MS_{bh_3} := \min(MS_{bry})$ $\quad MS_{bh_3} = 4.074$ ***... Bearing Yield Strength***

CHECK

Note: Figure is for reference only. Not to scale. Actual joint made differ. Washer may be on nut side, head side, or both.

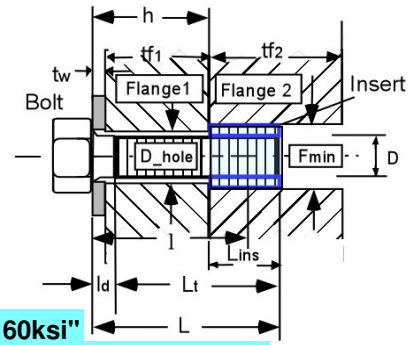

Bolt := **"NAS 1351N3LB10, .1900-32, .625L, HRES A286, Self Locking, Passivate, 160ksi"**
Washer := **"NAS 1149E0332R, .438 OD, .203 ID, .032 THK, Countersunk, CRES A286, 160ksi, Passivate"**
Insert := **"PEM SOS-032-16-Passivated, .1900-32, .495L, 303 Stainless Steel, Thru-Hole Threaded Standoff"**

Flange_1 := **"Standoff Bracket B"**
Part_Number_1 := **"SDG39137918-001"**
Material_1 := **"AL ALY 7075-T7351, AMS-QQ-Q-250/12, Plate, 1.00 Thk, A"**
edge1 := **0.500**·in *(Minimum Edge Distance of Flange 1)*

Flange_2 := **"TRD Gas Ballistic Cover - Inner Skin"**
Part_Number_2 := **"SLG39137916-502"**
Material_2 ≡ **"AL ALY 6061-T6, SAE-AMS-4027, Sheet, 0.050 Thk, A"**
edge2 := **0.500**·in *(Minimum Edge Distance of Flange 2)*

Methodology

The TRD Gas Ballistic Cover, SLG39137916-701, is attached to Box S with (3) Standoff Bracket A, SDG39137917-001, and (1) Standoff Bracket B, SDG39137918-301. All 4 brackets are AL ALY 7075-T7351. Each Standoff Bracket attaches to the Ballistic Cover by (2) NAS 1351N3LB10 fasteners with NAS 1587A3C washers, going into SOS-032-16 Self Clinching Standoffs in the TRD Gas Ballistic Cover.

A stand-alone FEM of the TRD Gas Ballistic Cover and Standoff Brackets was created. It was constrained at the 4 attachment points to Box S. Twenty-four g-load combinations, using the 40 (g) Load Factor from Table 4-4: Launch/Landing Design Limit Load Factors for Small Secondary Structures, JSC-28792, Rev. E, were analyzed.

The attachments between the Standoff Brackets and the TRD Gas Ballistic Cover are represented by Spider RBE3's (with the center dependent node given 6 dof T1 T2 T3 R1 R2 R3, and the outer independent nodes given T1 T2 T3) in the fastner holes of each flange, connected by CBush elements. The fastener loads between the Standoff Brackets and Cover are recovered as CBush Forces.

The largest absolute CBush Axial (P) load and the largest absolute Cbush Total Shear (V) load, are enveloped across all 4 Standoff Brackets, for all 24 load cases, and then used to calculate the Margins of Safety for the joints. Since each Bracket attaches to the Cover with two fasteners, for Fail-Safe Analysis, the worst case Axial and Total Shear loads were doubled and then used to calculate the Fail-Safe Margins of Safety for the joints.

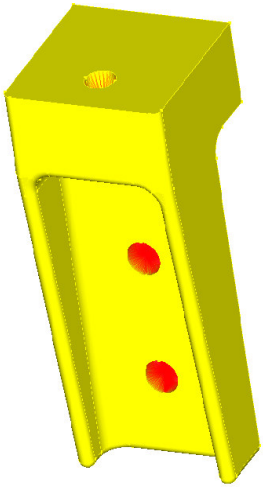

Allowables

Factors of Safety (reference)

$SFu := 2.00$ *(Ultimate Factor of Safety)*

$SFy := 1.25$ *(Yield Factor of Safety)*

$FF := 1.15$ *(Fitting Factor)*

$SFsep := 1.20$ *(Joint Separation)*

Temperature Data (reference)

$Temp_initial := 70 \cdot deg$ *(Assembly)*

$Temp_max := 140 \cdot deg$ *(Maximum)*

$Temp_min := -76 \cdot deg$ *(Minimum)*

Note: These are maximum temperatures that hardware sees. If maximum load occurs at a different temperature, this will be conservative.

Bolt Data (Bolt = **"NAS 1351N3LB10, .1900-32, .625L, HRES A286, Self Locking, Passivate, 160ksi"**)

$D := .1900 \cdot in$ *(Nominal Diameter of Bolt)*

$Nt := 32 \cdot \frac{1}{in}$ *(Number of Threads/Inch)*

$D_shank := .1840 \cdot in$ *(Shank Diameter of Bolt)*

Note: If there is a retainer groove in the fastener, this should be the calculated diameter to give an equivalent cross sectional area.

$L := 0.625 \cdot in$ *(Total Length of Bolt)*

$Lt := 0.625 \cdot in$ *(Threaded Length - bolt is fully threaded, input Lt = L)*

$dw := 0.303 \cdot in$ *(Bolt Head Dia. Across Flats - dia of pressure boss if it exists, otherwise dia of head)*

$bh := 0.185 \cdot in$ *(Bolt Head Height - head height is 0 if bolt is flat head)*

Thread data lookup table is hidden
This file uses the data shown in \\escfil02\2i11_mathcad\8307_bolts\Rev_D\thread_data.mcd

Fri Apr 27 14:11:39 2007

Bolt Data (Bolt = **"NAS 1351N3LB10, .1900-32, .625L, HRES A286, Self Locking, Passivate, 160ksi"**)

$TSu_bolt := 0.98$ $TSy_bolt := 0.98$ *(Temperature Correction Factor for Bolt Strength)*

$Ftu_bolt := 160000 \cdot psi$ $Fty_bolt := 120000 \cdot psi$ *(Bolt Ultimate Tensile Allowable Stress)*

$Fsu_bolt := 0.6 \cdot Ftu_bolt$ *(Bolt Ultimate Shear Allowable Stress)*

$TE_bolt := 0.98$ *(Temperature Correction Factor for Bolt Modulus)*

$E_bolt := \left(29.1 \cdot 10^{6} \cdot psi\right)$ *(Modulus of Elasticity of Bolt)*

$\beta_bolt_hot := 9.1 \cdot 10^{-6} \cdot \frac{\frac{in}{in}}{deg}$ $\beta_bolt_cold := 8.5 \cdot 10^{-6} \cdot \frac{\frac{in}{in}}{deg}$ *(Thermal Coefficients for Bolt)*

Washer Data (

Washer = **"NAS 1149E0332R, .438 OD, .203 ID, .032 THK, Countersunk, CRES A286, 160ksi, Passivate"** ***)***

Thickness of Washers

$tw := 0.032 \cdot in$ $L_{unthreaded} := 0.197 \cdot in$

Note: This is the total washer thickness, if there are more than one. USING THICKNESS OF WASHER (tw) + UNTHREADED LENGTH OF STANDOFF ($L_{unthreaded}$). (see dimension D in picture below).

$twh := tw + L_{unthreaded}$ $twh = 0.229\,in$ *(Head)*

Diameter of Washer Under Head

$Dwoh := 0.275\,in$ *(Outer - Limited to Minimum External Diameter of Standoff)*

$Dwih := 0.203 \cdot in$ *(Inner)*

Modulus of Elasticity

$E_washerh := \left(29.1 \cdot 10^{6} \cdot psi\right)$ *(Head)*

Temperature Correction Factor for Modulus

$TE_washerh := 0.98$ *(Head)* [same as bolt]

Insert Data (

Insert = **"PEM SOS-032-16-Passivated, .1900-32, .495L, 303 Stainless Steel, Thru-Hole Threaded Standoff"** ***)***

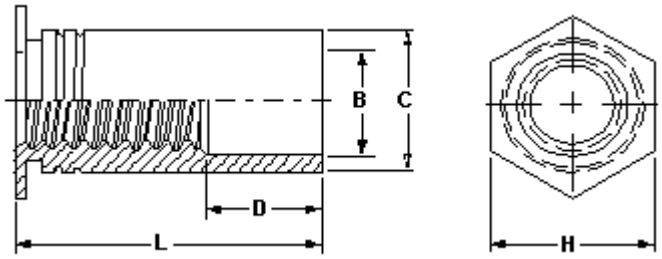

$Lins := 0.298 \cdot in$ *(USING THREADED LENGTH OF STANDOFF, L - D)*

$Fmin := 0.275 \cdot in$ *(Min. External Diameter of Insert)*

$lr := 0.020 \cdot in$ *(Depth of Recess for Insert)*

$TS_ins := 0.98$ *(Temperature Correction Factor for Insert Strength)*

$Ftu_ins := 73000 \cdot psi$ *(Ultimate Tensile Allowable Stress)*

$Fsu_ins := 0.6 \cdot Ftu_ins$ *(Ultimate Shear Allowable Stress)*

Note: CONDITION/TEMPER UNKNOWN. Could be Annealed, 1/4 1/2 3/4 or Full Hard. So, assuming the weakest, Annealed.

Flange data (Stiffness of the joint depends upon number of members in the grip of the fasteners & their material properties)

Flange_1 = **"Standoff Bracket B"**

Material_1 = **"AL ALY 7075-T7351, AMS-QQ-Q-250/12, Plate, 1.00 Thk, A"**

Flange_2 = **"TRD Gas Ballistic Cover - Inner Skin"**

Material_2 = **"AL ALY 6061-T6, SAE-AMS-4027, Sheet, 0.050 Thk, A"**

$D_hole := 0.213 \cdot in$ *(Diameter of Thru Hole in Flange 2)*

Thickness of Flanges

$tf1 := 0.120 \cdot in$

$tf2 := 0.050 in$

Compressive Modulus of Elasticity

$E_flange1 := \left(10.6 \cdot 10^{6} \cdot psi\right)$

$E_flange2 := \left(10.1 \cdot 10^{6} \cdot psi\right)$

Temperature Correction Factor (Modulus)

$Tf1E := 0.98$

$Tf2E := 0.98$

Coefficient of thermal expansion for Flanges

$\beta_flange1_hot := 12.5 \cdot 10^{-6} \cdot \frac{\frac{in}{in}}{deg}$

$\beta_flange2_hot := 12.8 \cdot 10^{-6} \cdot \frac{\frac{in}{in}}{deg}$

$\beta_flange1_cold := 12.1 \cdot 10^{-6} \cdot \frac{\frac{in}{in}}{deg}$

$\beta_flange2_cold := 12.1 \cdot 10^{-6} \cdot \frac{\frac{in}{in}}{deg}$

$Fsu_f2 := 27000 \cdot psi$ *(Shear Strength of Flange 2, with Temperature Reduction)*

$Tf2s := 0.96$ *(If Unavailable, Use Temperature Reduction Factor for Ftu)*

Applied Loads (reference)

P := **52.1**lbf *(Tensile)*

CBush: ABS Axial Force - Standoff Brackets

ID	SUBCASE	AXIAL	SHEAR	MX	MY	MZ
6000005	2013	-5.214979E+01	5.886861E+01	1.280827E+01	-5.820033E+00	6.113555E+00

V := **71.7**lbf *(Shear)*

CBush: MAG Shear Force - Standoff Brackets

ID	SUBCASE	AXIAL	SHEAR	MX	MY	MZ
6000005	2030	-4.548164E+01	7.166499E+01	1.542840E+01	-6.799858E+00	5.152246E+00

M := **0.0**in·lbf *(Bending)*

(See A28.7.1.1 Fasteners - CBUSH Forces - Landing)

Torque/Preload

(Shigley's "Mechanical Engineering Design")

Tmax := **25.6**·in·lbf *(Maximum Torque)*

Tmin := **21.8**in·lbf *(Minimum Torque)*

n := **0.5** *(Loading Plane Factor)*

Note: Per PEM Bulletin SO 1206, page SO-11, Maximum Recommended Tightening Torque for Mating Screw is 25.6 in-lbf, which is 38.9% of Yield. A Self-Locking fastener is being used.

Joint is lubed/dry

u := **0.25** *(Preload Uncertainty - 0.25 lubed/0.35 dry)*

k := **0.15** *(Torque Coefficient - 0.15 lubed/0.20 dry)*

Stiffness and Margin calculations are hidden

This file uses calculations shown in \\escfil02\2i11_mathcad\8307_bolts\Rev_D\bolt_insert_stiffness.mcd

Fri Apr 27 14:11:53 2007

Bolt Load

= **0.436** *(Bolt/Joint Stiffness Factor)*

Pthr_pos = **22.8** lbf *(Preload Due to Temperature)*

PLDmax = **1146** lbf *(Max. Preload)*

Pthr_neg = –**49.1** lbf

PLDmin = **468** lbf *(Min. Preload)*

PLDnom = **898** lbf *(Nom. Preload)*

u = **0.250** *(Uncertainty Factor)*

PLDratio = **0.397** *(Preload to Yield Ratio nom.)*

k = **0.150** *(Torque Coefficient)*

Psep = **62.520** lbf *(Joint Separation Load)*

n = **0.500** *(Loading Plane Factor)*

P = **52.100** lbf *(Applied Tensile Load on Bolt)*

V = **71.700** lbf *(Applied Shear on Bolt)*

M = **0.000** in·lbf *(Applied Bending on Bolt)*

Max. Load on Bolt with Preload and Factor of Safety

Pb = **1172** lbf *(Ultimate)*

Pby = **1162** lbf *(Yield)*

Max. Load on Bolt With Preload WithOut Factor of Safety

Pbapp = **1159** lbf

Bolt Allowables

PAt = **3018** lbf *(Bolt Ultimate Tensile Strength)* VAu = **1649** lbf *(Bolt Shear Strength)*

PAs = **3337** lbf *(Thread Pullout Strength)* MAu = **63** in·lbf *(Bolt Bending Strength)*

General Checks

length_check = **"Bolt length is sufficient and insert fully engaged"**

cone_check = **"Joint pressure cone does not extend pass flange edge"**

preload_check = **"WARNING: Nominal preload < 50% of bolt yield strength"**

washer_check = **"Washer(s) under head do not extend past flange"**

insert_check = **"NOTE: Insert extends past flange two--check dimensions"**

Note: This is because flange 2, the Ballistic Cover, is a half inch sandwich composite (.05 AL skin, .41 AL honeycomb core) but only the .05 AL inner skin resists pullout of the Self-Clinching Standoff.

Note: Per PEM Bulletin SO 1206, page SO-11, Maximum Recommended Tightening Torque for Mating Screw is 25.6 in-lbf, which is 38.9% of Yield. A Self-Locking fastener is being used.

Margin of Safety for Standoff Pull-Thru

Insert = **"PEM SOS-032-16-Passivated, .1900-32, .495L, 303 Stainless Steel, Thru-Hole Threaded Standoff"**

Note: For 0.060 inch thick AL 5052-H34 sheet, Pull-Thru Allowable = 464 lbf.
For sheet thickness < 0.060 inch, must use 80%.
Reference: Footnote (2), page SO-11, PEM Bulletin SO 1206 and PennEngineering, Fastener Test Specifications, FTS-104 (SO) Rev E, 4/22/2005.pdf.

PullThru_5052H34_060 := **464**·lbf *(AL 5052-H34, 0.060 Inch Thick Sheet)*

PullThru_5052H34_050 := **80**%·PullThru_5052H34_060

PullThru_5052H34_050 = **371.200** lbf *(AL 5052-H34, 0.050 Inch Thick Sheet)*

Fsu_6061T6 := **27**·ksi *(Shear Ultimate for 6061-T6)*

Fsu_5052H34 := **20**·ksi *(Shear Ultimate for 5052-H34)*

$$PullThru_6061T6_050 := \frac{Fsu_6061T6}{Fsu_5052H34} \cdot PullThru_5052H34_050$$

PullThru_6061T6_050 = **501.120** lbf *(AL 6061-T6, 0.050 Inch Thick Sheet)*

$$MS_PullThru_6061T6_050 := \frac{PullThru_6061T6_050}{P \cdot SFu \cdot FF} - 1$$

Prepared By	Name	Date		File Name
	Kent Peters	12/18/08	Engineering and Science Contract Group *Structural Analysis Section*	Standoff Bracket B to Cover.xmcdz
Checked By	C. Bala			Drawing No. SEG39137915
Title	Debris Shield Fastener Joint Analysis for Bolt/Washer with Insert TRD Gas Supply - Standoff Bracket B to TRD Gas Ballistic Cover			

MS_PullThru_6061T6_050 = **3.182** ***... Standoff Pull-Thru Ultimate***

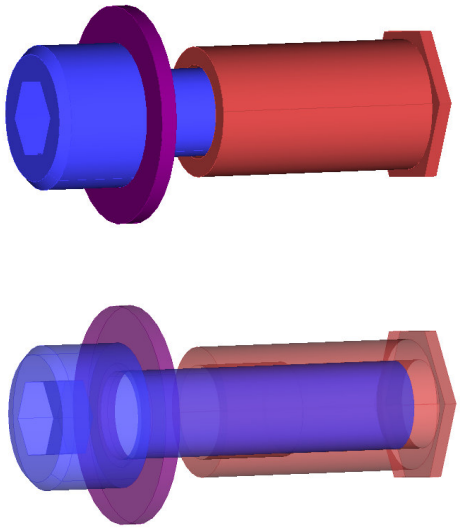

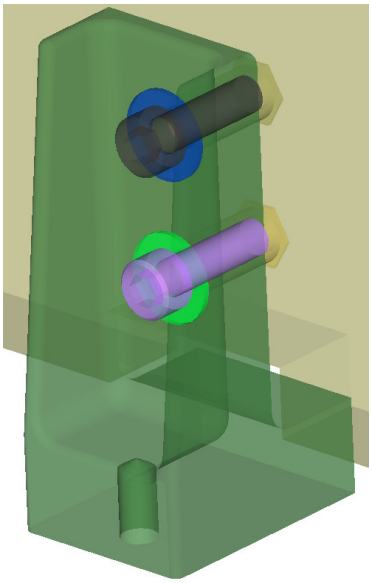

Summary of Margins for Bolt

MS_1 = **7.33**	***...Joint Separation***	MS_6 = **26.84**	***...Direct Thread Shear Ultimate***
MS_2 = **24.19**	***...Direct Tension Ultimate***	MS_7 = **1.85**	***...Total Thread Shear Ultimate***
MS_3 = **29.22**	***...Direct Tension Yield***	MS_8 = **9**	***...Shear Ultimate***
MS_4 = **1.58**	***...Total Tension Ultimate***	MS_9 = **100**	***...Bending Ultimate***
MS_5 = **0.95**	***...Total Tension Yield***	MS_{10} = **1.55**	***...Combined Shear, Tension and Bending Ultimate***

Smallest Margin of Safety for Bolt and Failure Mode

MS_5 = **0.95** ***...Total Tension Yield***

Note: The default MS7, Total Thread Shear Ultimate, calculation used by this Bolt Analysis Tempate, Rev. D, is not valid for this analysis because this insert/standoff is installed by pressing (embedding) the standoff's hex head flush in the AL Sheet Inner Skin. This insert is NOT threaded into the flange as the default calculation assumes.

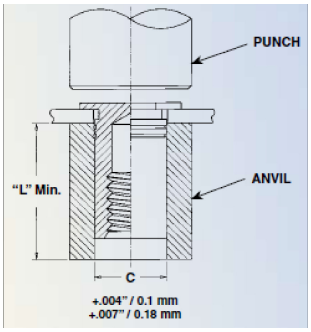

Fail-Safe Analysis

Fail-Safe Loads *(See A28.7.1.15.1 One Splice Plate Removed, Landing & Liftoff)*

$P_FS := 55.717 \cdot lbf$ *(Applied Tensile)*

$V_FS := 77.195 \cdot lbf$ *(Applied Shear)*

$M_FS := 0.0 \cdot in \cdot lbf$ *(Applied Bending)*

CBush: ABS Axial Force - Standoff Brackets

ID	SUBCASE	AXIAL	SHEAR	MX	MY	MZ
6000006	2030	-5.571735E+01	1.274937E+01	-3.635549E-01	3.725737E-02	7.099232E+0(

CBush: MAG Shear Force - Standoff Brackets

ID	SUBCASE	AXIAL	SHEAR	MX	MY	MZ
6000005	2030	-3.173613E+01	7.719511E+01	1.765853E+01	-1.349644E+01	3.930835E+0(

Fail-Safe Factors of Safety

$SFu_FS := 1.0$ *(Ultimate)*

$SFsep_FS := 1.0$ *(Joint Separation)*

Fri Apr 27 14:12:08 2007

Fail Safe Margin calculations are hidden / stiffness & allowable data is not recalculated
This file calculations shown in \\escfil02\2i11_mathcad\8307_bolts\Rev_D\bolt_insert_stiffness__FS.mcd

Bolt Fail-Safe Load Data

$Psep_FS = 55.717\ lbf$ *(Joint Separation Load)*

$Pb_FS = 1159.6\ lbf$ *(Max. Ultimate Load on Bolt)*

Fail-Safe Margin of Safety for Standoff Pull-Thru

$$MS_FS_PullThru_6061T6_050 := \frac{PullThru_6061T6_050}{P_FS \cdot SFu_FS \cdot FF} - 1$$

$MS_FS_PullThru_6061T6_050 = 6.821$ ***... Standoff Pull-Thru Ultimate***

Summary of Fail-Safe Margins for Bolt

$MS_FS_1 = 8.35$	***...Joint Separation***	$MS_FS_5 = 1.88$	***...Total Thread Shear Ultimate***
$MS_FS_2 = 46.1$	***...Direct Tension Ultimate***	$MS_FS_6 = 17.58$	***...Shear Ultimate***
$MS_FS_3 = 1.6$	***...Total Tension Ultimate***	$MS_FS_7 = 10.00$	***...Bending Ultimate***
$MS_FS_4 = 51.07$	***...Direct Thread Shear Ultimate***	$MS_FS_8 = 1.60$	***...Combined Shear, Tension, and Bending Ultimate***

Smallest Fail-Safe Margin of Safety for Bolt and Failure Mode

$MS_FS_8 = 1.60$ ***...Combined Shear, Tension, and Bending Ultimate***

Note: The default MS_FS5, Total Thread Shear Ultimate, calculation used by this Bolt Analysis Tempate, Rev. D, is not valid for this analysis because this insert/standoff is installed by pressing (embedding) the standoff's hex head flush in the AL Sheet Inner Skin. This insert is NOT threaded into the flange as the default calculation assumes.

Bolt Hole Analysis

Recall Loads From Bolt Calculation

Safety Factors	SFu = **2.00**	*(Ultimate)*	SFy = **1.250**	*(Yield)*
	FF = **1.150**	*(Fitting Factor)*		
Input Loads	V = **71.7** lbf	*(Shear Load)*	P = **52.1** lbf	*(Axial Load)*
Bolt Calc Results	Pb = **1172** lbf	*(Max Bolt Load)*		
Dimensions	L = **0.625** in	*(Length of Bolt)*	twh = **0.229** in	*(Thickness of Washer)*

Recall Bolt Hole Dimensions

$tf_1 := tf1 \quad tf_1 = \mathbf{0.120}\,in$ *(Entire Thickness of Flange 1)* $Tf1E = \mathbf{0.980}$

$tf_2 := tf2 \quad tf_2 = \mathbf{0.050}\,in$ *(Entire Thickness of Flange 2)* $Tf2E = \mathbf{0.980}$

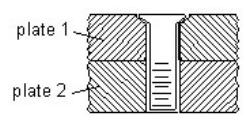

$edge_1 := edge1 \quad edge_1 = \mathbf{0.500}\,in$ *(Edge Distance for Hole in Flange 1)*

$edge_2 := edge2 \quad edge_2 = \mathbf{0.500}\,in$ *(Edge Distance for Hole in Flange 2)*

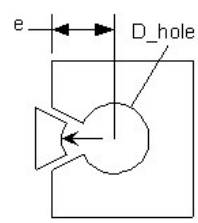

$D = \mathbf{0.190}\,in$ *(Diameter of Bolt)*

$D_shank = \mathbf{0.184}\,in$ *(Min. Shank Diameter of Bolt)*

$D_hole = \mathbf{0.213}\,in$ *(Diameter of Hole)*

Typical shear tear-out failure

Shear Tear-Out Check

Shear Area of the Mating Components (Ref. Analysis & Design of Flight Vehicle Structures, Bruhn, Pg. D1.5)

$$A_{shrpl} := \overrightarrow{\left[2 \cdot tf \cdot \left(edge - \frac{1}{2} D_hole\right)\right]} \quad \begin{pmatrix} Plate1 \\ Plate2 \end{pmatrix} \qquad A_{shrpl} = \begin{pmatrix} \mathbf{0.094} \\ \mathbf{0.039} \end{pmatrix} in^2$$

Allowables for Flanges that Fastener Goes Through

$Fsu_1 := Tf1E \cdot \mathbf{38} \cdot ksi \qquad Fsu_1 = \mathbf{37.240}\,ksi$ *(Ultimate Shear Allowable for Flange 1)*

$Fsu_2 := Tf2E \cdot \mathbf{27} \cdot ksi \qquad Fsu_2 = \mathbf{26.460}\,ksi$ *(Ultimate Shear Allowable for Flange 2)*

$$P_{su} := \overrightarrow{\left(A_{shrpl} \cdot Fsu\right)} \qquad P_{su} = \begin{pmatrix} \mathbf{3517} \\ \mathbf{1041} \end{pmatrix} lbf$$ *(Shear Ultimate Allowable)*

Margin of Safety for Shear Tear-Out

$$MS_{su} := \overrightarrow{\left(\frac{P_{su}}{V \cdot SFu \cdot FF} - \mathbf{1}\right)} \quad \begin{pmatrix} Plate1 \\ Plate2 \end{pmatrix} \qquad MS_{su} = \begin{pmatrix} \mathbf{20.33} \\ \mathbf{5.31} \end{pmatrix}$$

$MS_{bh_1} := \min\left(MS_{su}\right) \qquad MS_{bh_1} = \mathbf{5.314}$ ***... Shear Tear-Out***

Bearing Check

Recall Bolt Hole Dimensions

$tf_1 = 0.120\,in$ *(Thickness of Flange 1)*

$tf_2 = 0.050\,in$ *(Thickness of Flange 2)*

$edge_1 = 0.500\,in$ *(Edge Distance for thru Hole in Flange 1)*

$edge_2 = 0.500\,in$ *(Edge Distance for tapped Hole in Flange 2)*

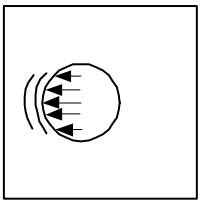

Typical Bearing Failure

$A_{br} := \overrightarrow{(tf \cdot \min(D, D_shank))}$ $\begin{pmatrix} \text{Plate1} \\ \text{Plate2} \end{pmatrix}$ $A_{br} = \begin{pmatrix} 0.022 \\ 0.009 \end{pmatrix} in^2$ *(Bearing Areas)*

$e_D := \overrightarrow{\frac{edge}{D_hole}}$ $e_D = \begin{pmatrix} 2.347 \\ 2.347 \end{pmatrix}$ *(e/D for Flanges)*

Bearing Allowables for Flanges that Fastener Goes Through

	Flange 1		Flange 2	
Fbru (e/D=1.5)	$Fbru15_1 := Tf1E \cdot 103 ksi$	$Fbru15_1 = 100.94\,ksi$	$Fbru15_2 := Tf2E \cdot 67 ksi$	$Fbru15_2 = 65.66\,ksi$
Fbru (e/D=2.0)	$Fbru20_1 := Tf1E \cdot 132 ksi$	$Fbru20_1 = 129.36\,ksi$	$Fbru20_2 := Tf2E \cdot 88 ksi$	$Fbru20_2 = 86.24\,ksi$
Fbry (e/D=1.5)	$Fbry15_1 := Tf1E \cdot 81 \cdot ksi$	$Fbry15_1 = 79.38\,ksi$	$Fbry15_2 := Tf2E \cdot 50 \cdot ksi$	$Fbry15_2 = 49\,ksi$
Fbry (e/D=2.0)	$Fbry20_1 := Tf1E \cdot 97 \cdot ksi$	$Fbry20_1 = 95.060\,ksi$	$Fbry20_2 := Tf2E \cdot 58 \cdot ksi$	$Fbry20_2 = 56.840\,ksi$

Modified Bearing Strength

$$Fbru_m_1 := if\left[e_D_1 > 2.0, Fbru20_1, if\left[(e_D_1 > 1.5)\cdot(e_D_1 < 2.0), Fbru15_1 + \frac{e_D_1 - 1.5}{2.0 - 1.5}\cdot(Fbru20_1 - Fbru15_1), \left[Fbru15_1\cdot(e_D_1 - 0.5)\right]\right]\right]$$

$$Fbru_m_2 := if\left[e_D_2 > 2.0, Fbru20_2, if\left[(e_D_2 > 1.5)\cdot(e_D_2 < 2.0), Fbru15_2 + \frac{e_D_2 - 1.5}{2.0 - 1.5}\cdot(Fbru20_2 - Fbru15_2), \left[Fbru15_2\cdot(e_D_2 - 0.5)\right]\right]\right]$$

$$Fbry_m_1 := if\left[e_D_1 > 2.0, Fbry20_1, if\left[(e_D_1 > 1.5)\cdot(e_D_1 < 2.0), Fbry15_1 + \frac{e_D_1 - 1.5}{2.0 - 1.5}\cdot(Fbry20_1 - Fbry15_1), \left[Fbry15_1\cdot(e_D_1 - 0.5)\right]\right]\right]$$

$$Fbry_m_2 := if\left[e_D_2 > 2.0, Fbry20_2, if\left[(e_D_2 > 1.5)\cdot(e_D_2 < 2.0), Fbry15_2 + \frac{e_D_2 - 1.5}{2.0 - 1.5}\cdot(Fbry20_2 - Fbry15_2), \left[Fbry15_2\cdot(e_D_2 - 0.5)\right]\right]\right]$$

$Fbru_m = \begin{pmatrix} 129.36 \\ 86.24 \end{pmatrix} ksi$ $\begin{pmatrix} \text{Plate1} \\ \text{Plate2} \end{pmatrix}$ *(Ultimate)*

$Fbry_m = \begin{pmatrix} 95.06 \\ 56.84 \end{pmatrix} ksi$ $\begin{pmatrix} \text{Plate1} \\ \text{Plate2} \end{pmatrix}$ *(Yield)*

$P_{bru} := \overrightarrow{(A_{br} \cdot Fbru_m)}$ $\quad P_{bru} = \begin{pmatrix} 2856 \\ 793 \end{pmatrix} lbf$ *(Bearing Ultimate Allowable)*

$P_{bry} := \overrightarrow{(A_{br} \cdot Fbry_m)}$ $\quad P_{bry} = \begin{pmatrix} 2099 \\ 523 \end{pmatrix} lbf$ *(Bearing Yield Allowable)*

Margin of Safety for Bearing Failure

$\mathbf{MS_{bru}} := \overrightarrow{\left(\frac{P_{bru}}{V \cdot SFu \cdot FF} - 1\right)}$ $\quad \mathbf{MS_{bru}} = \begin{pmatrix} 16.320 \\ 3.811 \end{pmatrix}$ $\begin{pmatrix} Plate1 \\ Plate2 \end{pmatrix}$

$MS_{bh_2} := \min(\mathbf{MS_{bru}})$ $\quad MS_{bh_2} = 3.811$ ***... Bearing Ultimate Strength***

$MS_{bry} := \overrightarrow{\left(\frac{P_{bry}}{V \cdot SFy \cdot FF} - 1\right)}$ $\quad MS_{bry} = \begin{pmatrix} 19.36 \\ 4.07 \end{pmatrix}$ $\begin{pmatrix} Plate1 \\ Plate2 \end{pmatrix}$

$MS_{bh_3} := \min(MS_{bry})$ $\quad MS_{bh_3} = 4.074$ ***... Bearing Yield Strength***

CHECK

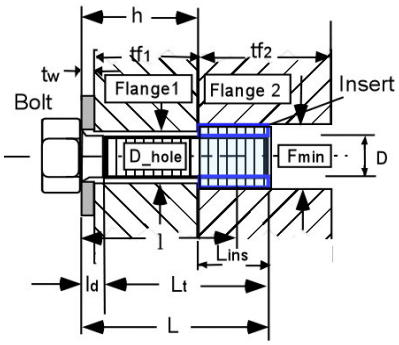

Note: Figure is for reference only.
Not to scale. Actual joint made differ.
Washer may be on nut side, head side, or both.

Bolt := **"NAS1351N3-6, 0.190-32, 0.375L, HRES A286, 160ksi"**

Washer := **"NAS1149E0332R, 0.438 OD, 0.203 ID, 0.032 THK, A286"**

Insert := **"NASM21209F1-10, 0.190-32, 0.190L (1.0xDia), CRES"**

Flange_1 := **"Standoff Bracket A"**
Part_Number_1 := **"SDG39137917-001"**
Material_1 := **"AL ALY 7075-T7351, AMS-QQ-Q-250/12, Plate, 0.80 Thk, A"**
edge1 := **0.285**·in *(Minimum Edge Distance of Flange 1)*

Flange_2 := **"Box S (base plate)"**
Part_Number_2 := **"unknown"**
Material_2 ≡ **"AL ALY 7050-T7451"**
edge2 := **1.315**·in *(Minimum Edge Distance of Flange 2)*

Methodology

The TRD Gas Ballistic Cover, SLG39137916-701, is attached to Box S with (3) Standoff Bracket A, SDG39137917-001, and (1) Standoff Bracket B, SDG39137918-301. All 4 brackets are AL ALY 7075-T7351. Each Standoff Bracket attaches to the Ballistic Cover by (2) NAS 1351N3LB10 fasteners with NAS1149E0332R washers, going into SOS-032-16 Self Clinching Standoffs in the TRD Gas Ballistic Cover.

A stand-alone FEM of the TRD Gas Ballistic Cover and Standoff Brackets was created. It was constrained at the 4 attachment points to Box S. Twenty-four g-load combinations, using the 40 (g) Load Factor from Table 4-4: Launch/Landing Design Limit Load Factors for Small Secondary Structures, JSC-28792, Rev. E, were analyzed.

The attachments between the Standoff Brackets and the TRD Gas Ballistic Cover are represented by Spider RBE3's (with the center dependent node given 6 dof T1 T2 T3 R1 R2 R3, and the outer independent nodes given T1 T2 T3) in the fastner holes of each flange, connected by CBush elements. The fastener loads between the Standoff Brackets and Cover are recovered as CBush Forces.

The largest absolute CBush Axial (P) load and the largest absolute Cbush Total Shear (V) load, are enveloped across all 4 Standoff Brackets, for all 24 load cases, and then used to calculate the Margins of Safety for the joints. Since each Bracket attaches to the Cover with two fasteners, for Fail-Safe Analysis, the worst case Axial and Total Shear loads were doubled and then used to calculate the Fail-Safe Margins of Safety for the joints.

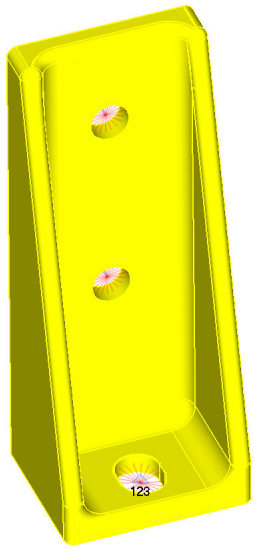

Allowables

Factors of Safety (reference)

SFu := **2.00** *(Ultimate Factor of Safety)*

SFy := **1.25** *(Yield Factor of Safety)*

FF := **1.15** *(Fitting Factor)*

SFsep := **1.20** *(Joint Separation)*

Temperature Data (reference)

Temp_initial := **70**·deg *(Assembly)*

Temp_max := **140**·deg *(Maximum)*

Temp_min := –**76**·deg *(Minimum)*

Note: These are maximum temperatures that hardware sees. If maximum load occurs at a different temperature, this will be conservative.

Bolt Data (Bolt = **"NAS1351N3-6, 0.190-32, 0.375L, HRES A286, 160ksi"**)

D := **.1900**·in *(Nominal Diameter of Bolt)*

Nt := $32 \cdot \frac{1}{in}$ *(Number of Threads/Inch)*

D_shank := **.1840**·in *(Shank Diameter of Bolt)*

Note: If there is a retainer groove in the fastener, this should be the calculated diameter to give an equivalent cross sectional area.

L := **0.375**·in *(Total Length of Bolt)*

Lt := **0.375**·in *(Threaded Length - bolt is fully threaded, input Lt = L)*

dw := **0.303**·in *(Bolt Head Dia. Across Flats - dia of pressure boss if it exists, otherwise dia of head)*

bh := **0.185**·in *(Bolt Head Height - head height is 0 if bolt is flat head)*

Thread data lookup table is hidden
This file uses the data shown in \\escfil02\2i11_mathcad\8307_bolts\Rev_D\thread_data.mcd

Fri Apr 27 14:11:39 2007

Bolt Data (Bolt = **"NAS1351N3-6, 0.190-32, 0.375L, HRES A286, 160ksi"**)

TSu_bolt := **0.98** TSy_bolt := **0.98** *(Temperature Correction Factor for Bolt Strength)*

Ftu_bolt := **160000**·psi Fty_bolt := **120000**·psi *(Bolt Ultimate Tensile Allowable Stress)*

Fsu_bolt := **0.6**·Ftu_bolt *(Bolt Ultimate Shear Allowable Stress)*

TE_bolt := **0.98** *(Temperature Correction Factor for Bolt Modulus)*

E_bolt := $\left(29.1 \cdot 10^{6} \cdot psi\right)$ *(Modulus of Elasticity of Bolt)*

$\beta_bolt_hot := 9.1 \cdot 10^{-6} \cdot \frac{\frac{in}{in}}{deg}$ $\beta_bolt_cold := 8.5 \cdot 10^{-6} \cdot \frac{\frac{in}{in}}{deg}$ *(Thermal Coefficients for Bolt)*

Washer Data (Washer = **"NAS1149E0332R, 0.438 OD, 0.203 ID, 0.032 THK, A286"**)

Thickness of Washers

$twh := 0.032 \cdot in$ *(Head)*

Note: This is the total washer thickness, if there are more than one.

Diameter of Washer Under Head

Note: If there is no washer, tw's, Dwo's, and Dwi's should be zero.

$Dwoh := 0.438 in$ *(Outer)*

$Dwih := 0.203 \cdot in$ *(Inner)*

Modulus of Elasticity

$E_washerh := \left(29.1 \cdot 10^{6} \cdot psi\right)$ *(Head)*

Temperature Correction Factor for Modulus

$TE_washerh := 0.98$ *(Head)* [same as bolt]

Insert Data (Insert = **"NASM21209F1-10, 0.190-32, 0.190L (1.0xDia), CRES"**)

$Lins := 0.190 \cdot in$ *(Length of Insert)*

$Fmin := 0.236 \cdot in$ *(Min. External Diameter of Insert)*

$lr := 0.020 \cdot in$ *(Depth of Recess for Insert)*

$TS_ins := 0.98$ *(Temperature Correction Factor for Insert Strength)*

$Ftu_ins := 150000 \cdot psi$ *(Ultimate Tensile Allowable Stress)*

$Fsu_ins := 0.6 \cdot Ftu_ins$ *(Ultimate Shear Allowable Stress)*

Note: See Procurment Specification NASM8846 3.2.2 Tensile Strength.

Flange data (Stiffness of the joint depends upon number of members in the grip of the fasteners & their material properties)

Flange_1 = **"Standoff Bracket A"**

Material_1 = **"AL ALY 7075-T7351, AMS-QQ-Q-250/12, Plate, 0.80 Thk, A"**

Flange_2 = **"Box S (base plate)"**

Material_2 = **"AL ALY 7050-T7451"**

$D_hole := 0.190 \cdot in$ *(Diameter of Thru Hole in Flange 2)*

Thickness of Flanges

$tf1 := 0.100 \cdot in$

$tf2 := 0.2362 in$ *(6mm)*

Compressive Modulus of Elasticity

$E_flange1 := \left(10.6 \cdot 10^{6} \cdot psi\right)$

$E_flange2 := \left(10.6 \cdot 10^{6} \cdot psi\right)$

Temperature Correction Factor (Modulus)

$Tf1E := 0.98$

$Tf2E := 0.98$

Coefficient of thermal expansion for Flanges

$\beta_flange1_hot := 12.5 \cdot 10^{-6} \cdot \frac{\frac{in}{in}}{deg}$

$\beta_flange2_hot := 12.5 \cdot 10^{-6} \cdot \frac{\frac{in}{in}}{deg}$

$\beta_flange1_cold := 12.1 \cdot 10^{-6} \cdot \frac{\frac{in}{in}}{deg}$

$\beta_flange2_cold := 12.1 \cdot 10^{-6} \cdot \frac{\frac{in}{in}}{deg}$

$Fsu_f2 := 43000 \cdot psi$ *(Shear Strength of Flange 2, with Temperature Reduction)*

$Tf2s := 0.91$ *(If Unavailable, Use Temperature Reduction Factor for Ftu)*

Applied Loads (reference)

$P := 16.160 \cdot lbf$ *(Applied Tensile)* *(See A28.7.1.2.2 Fasteners - CBUSH Forces - Liftoff)*

CBush: ABS Axial Force - Standoff Brackets to Box S

ID	SUBCASE	AXIAL	SHEAR	MX	MY	MZ
6900018	**1018**	**-1.615968E+01**	8.002845E+00	-4.372622E-01	-5.185723E+00	-1.540430E+01

$V := 28.165 \cdot lbf$ *(Applied Shear)* *(See A28.7.1.1.2 Fasteners - CBUSH Forces - Landing)*

CBush: MAG Shear Force - Standoff Brackets to Box S

ID	SUBCASE	AXIAL	SHEAR	MX	MY	MZ
6900019	**2030**	-1.063413E+01	**2.816549E+01**	-7.659478E+00	1.026473E+02	-2.727308E+01

$M := 0.0 in \cdot lbf$ *(Applied Bending)*

Torque/Preload

(Shigley's "Mechanical Engineering Design")

$Tmax := 40.6 \cdot in \cdot lbf$ *(Maximum Torque)*

$Tmin := 34.5 in \cdot lbf$ *(Minimum Torque)*

$n := 0.5$ *(Loading Plane Factor)*

Joint is lubed

$u := 0.25$ *(Preload Uncertainty - 0.25 lubed)*

$k := 0.15$ *(Torque Coefficient - 0.15 lubed)*

Fri Apr 27 14:11:53 2007

Stiffness and Margin calculations are hidden
This file uses calculations shown in \\escfil02\2i11_mathcad\8307_bolts\Rev_D\bolt_insert_stiffness.mcd

Bolt Load

$= 0.448$ *(Bolt/Joint Stiffness Factor)*

$Pthr_pos = 77.2 \cdot lbf$ *(Preload Due to Temperature)*

$PLDmax = 1858 \cdot lbf$ *(Max. Preload)*

$Pthr_neg = -170.4 \cdot lbf$

$PLDmin = 648 \cdot lbf$ *(Min. Preload)*

$PLDnom = 1425 \cdot lbf$ *(Nom. Preload)*

$u = 0.250$ *(Uncertainty Factor)*

$PLDratio = 0.629$ *(Preload to Yield Ratio nom.)*

$k = 0.150$ *(Torque Coefficient)*

$Psep = 19.392 \cdot lbf$ *(Joint Separation Load)*

$n = 0.500$ *(Loading Plane Factor)*

$P = 16.160 \cdot lbf$ *(Applied Tensile Load on Bolt)*

$V = 28.165 \cdot lbf$ *(Applied Shear on Bolt)*

$M = 0.000 \cdot in \cdot lbf$ *(Applied Bending on Bolt)*

Max. Load on Bolt with Preload and Factor of Safety

$Pb = 1866 \cdot lbf$ *(Ultimate)*

$Pby = 1863 \cdot lbf$ *(Yield)*

Max. Load on Bolt With Preload WithOut Factor of Safety

$Pbapp = 1862 \cdot lbf$

Bolt Allowables

PAt = **3018**·lbf *(Bolt Ultimate Tensile Strength)* VAu = **1649**·lbf *(Bolt Shear Strength)*

PAs = **2756**·lbf *(Thread Pullout Strength)* MAu = **63**·in·lbf *(Bolt Bending Strength)*

General Checks

length_check = **"Bolt length is sufficient and insert fully engaged"**

cone_check = **"Joint pressure cone does not extend pass flange edge"**

preload_check = **"NOTE: Nominal preload < 65% of bolt yield strength"**

washer_check = **"Washer(s) under head do not extend past flange"**

insert_check = **"Flange two is thick enough for insert"**

Summary of Margins for Bolt

MS_1 = **36.48**	***...Joint Separation***	MS_6 = **73.15**	***...Direct Thread Shear Ultimate***
MS_2 = **80.2**	***...Direct Tension Ultimate***	MS_7 = **0.48**	***...Total Thread Shear Ultimate***
MS_3 = **96.45**	***...Direct Tension Yield***	MS_8 = **24.46**	***...Shear Ultimate***
MS_4 = **0.62**	***...Total Tension Ultimate***	MS_9 = **100**	***...Bending Ultimate***
MS_5 = **0.22**	***...Total Tension Yield***	MS_{10} = **0.62**	***...Combined Shear, Tension and Bending Ultimate***

Smallest Margin of Safety for Bolt and Failure Mode

MSbolt = **0.22** Failure_Mode = **"Total Tension Yield"**

Fail-Safe Analysis

Applied Fail-Safe Loads *(See A28.7.1.15.2 One Standoff Bracket to Box S Removed, Landing&Liftoff)*

$P_FS := 22.100 \cdot lbf$ *(Tensile)*

CBush: ABS Axial Force - Standoff Brackets

ID	SUBCASE	AXIAL	SHEAR	MX	MY	MZ
6900017	1030	-2.209999E+01	2.013635E+01	4.357716E+00	4.150701E+01	-2.257239E+01

$V_FS := 32.204 \cdot lbf$ *(Shear)*

CBush : MAG Shear Force - Standoff Brackets

ID	SUBCASE	AXIAL	SHEAR	MX	MY	MZ
6900017	2030	-1.687651E+01	3.220402E+01	7.005090E+00	7.577881E+01	-3.881357E+01

$M_FS := 0.0 \cdot in \cdot lbf$ *(Bending)*

Fail-Safe Factors of Safety

$SFu_FS := 1.0$ *(Ultimate)*

$SFsep_FS := 1.0$ *(Joint Separation)*

Fri Apr 27 14:12:08 2007

Fail Safe Margin calculations are hidden / stiffness & allowable data is not recalculated
This file calculations shown in \\escfil02\2i11_mathcad\8307_bolts\Rev_D\bolt_insert_stiffness__FS.mcd

Bolt Fail-Safe Load Data

$Psep_FS = 22.100 \cdot lbf$ *(Joint Separation Load)*

$Pb_FS = 1863.6 \cdot lbf$ *(Max. Ultimate Load on Bolt)*

Summary of Fail-Safe Margins for Bolt

$MS_FS_1 = 31.89$	***...Joint Separation***	$MS_FS_5 = 0.48$	***...Total Thread shear Ultimate***
$MS_FS_2 = 117.76$	***...Direct Tension Ultimate***	$MS_FS_6 = 43.54$	***...Shear Ultimate***
$MS_FS_3 = 0.62$	***...Total Tension Ultimate***	$MS_FS_7 = 10.00$	***...Bending Ultimate***
$MS_FS_4 = 107.44$	***...Direct Thread shear Ultimate***	$MS_FS_8 = 0.62$	***...Combined Shear, Tension and Bending Ultimate***

Smallest Fail-Safe Margin of Safety for Bolt and Failure Mode

$MSbolt_FS = 0.48$ Failure_Mode_FS = **"Total Thread Shear Ultimate (Flange)"**

Bolt Hole Analysis

Recall Loads From Bolt Calculation

Safety Factors	SFu = **2.00**	*(Ultimate)*	SFy = **1.250**	*(Yield)*
	FF = **1.150**	*(Fitting Factor)*		
Input Loads	V = **28.2**·lbf	*(Shear Load)*	P = **16.2**·lbf	*(Axial Load)*
Bolt Calc Results	Pb = **1866**·lbf	*(Max Bolt Load)*		
Dimensions	L = **0.375**·in	*(Length of Bolt)*	twh = **0.032**in	*(Thickness of Washer)*

Recall Bolt Hole Dimensions

$tf_1 := tf1$ $\quad tf_1 = \mathbf{0.100}\,in$ *(Entire Thickness of Flange 1)* $\quad Tf1E = \mathbf{0.980}$

$tf_2 := tf2$ $\quad tf_2 = \mathbf{0.236}\,in$ *(Entire Thickness of Flange 2)* $\quad Tf2E = \mathbf{0.980}$

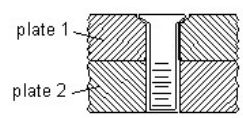

$edge_1 := edge1$ $\quad edge_1 = \mathbf{0.285}\,in$ *(Edge Distance for Hole in Flange 1)*

$edge_2 := edge2$ $\quad edge_2 = \mathbf{1.315}\,in$ *(Edge Distance for Hole in Flange 2)*

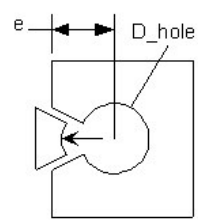

$D = \mathbf{0.190}\,in$ *(Diameter of Bolt)*

$D_shank = \mathbf{0.184}\,in$ *(Min. Shank Diameter of Bolt)*

$D_hole = \mathbf{0.190}\,in$ *(Diameter of Hole)*

Typical shear tear-out failure

Shear Tear-Out Check

Shear Area of the Mating Components (Ref. Analysis & Design of Flight Vehicle Structures, Bruhn, Pg. D1.5)

$$A_{shrpl} := \overrightarrow{\left[2\cdot tf\cdot\left(edge - \frac{1}{2}D_hole\right)\right]} \quad \begin{pmatrix}\text{Plate1}\\ \text{Plate2}\end{pmatrix} \qquad A_{shrpl} = \begin{pmatrix}\mathbf{0.038}\\ \mathbf{0.576}\end{pmatrix}\cdot in^2$$

Allowables for Flanges that Fastener Goes Through

$Fsu_1 := Tf1E\cdot\mathbf{38}\cdot ksi$ $\quad Fsu_1 = \mathbf{37.240}\cdot ksi$ *(Ultimate Shear Allowable for Flange 1)*

$Fsu_2 := Tf2E\cdot\mathbf{43}\cdot ksi$ $\quad Fsu_2 = \mathbf{42.140}\cdot ksi$ *(Ultimate Shear Allowable for Flange 2)*

$$P_{su} := \overrightarrow{\left(A_{shrpl}\cdot Fsu\right)} \qquad P_{su} = \begin{pmatrix}\mathbf{1415}\\ \mathbf{24286}\end{pmatrix}\cdot lbf$$ *(Shear Ultimate Allowable)*

Margin of Safety for Shear Tear-Out

$$MS_{su} := \overrightarrow{\left(\frac{P_{su}}{V\cdot SFu\cdot FF} - \mathbf{1}\right)} \quad \begin{pmatrix}\text{Plate1}\\ \text{Plate2}\end{pmatrix} \qquad MS_{su} = \begin{pmatrix}\mathbf{20.85}\\ \mathbf{373.91}\end{pmatrix}$$

$MS_{bh_1} := \min\left(MS_{su}\right)$ $\quad MS_{bh_1} = \mathbf{20.845}$ ***... Shear Tear-Out***

Bearing Check

Recall Bolt Hole Dimensions

$tf_1 = \mathbf{0.100}\,in$ *(Thickness of Flange 1)*

$tf_2 = \mathbf{0.236}\,in$ *(Thickness of Flange 2)*

$edge_1 = \mathbf{0.285}\,in$ *(Edge Distance for thru Hole in Flange 1)*

$edge_2 = \mathbf{1.315}\,in$ *(Edge Distance for tapped Hole in Flange 2)*

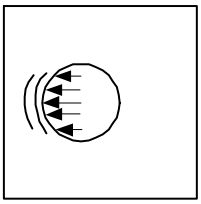

Typical Bearing Failure

$A_{br} := \overrightarrow{(tf \cdot \min(D, D_shank))}$ $\begin{pmatrix} \text{Plate1} \\ \text{Plate2} \end{pmatrix}$ $A_{br} = \begin{pmatrix} \mathbf{0.018} \\ \mathbf{0.043} \end{pmatrix} \cdot in^2$ *(Bearing Areas)*

$e_D := \overrightarrow{\dfrac{edge}{D_hole}}$ $e_D = \begin{pmatrix} \mathbf{1.500} \\ \mathbf{6.921} \end{pmatrix}$ *(e/D for Flanges)*

Bearing Allowables for Flanges that Fastener Goes Through

	Flange 1		Flange 2	
Fbru (e/D=1.5)	$Fbru15_1 := Tf1E \cdot \mathbf{103}ksi$	$Fbru15_1 = \mathbf{100.94} \cdot ksi$	$Fbru15_2 := Tf2E \cdot \mathbf{107}ksi$	$Fbru15_2 = \mathbf{104.86} \cdot ksi$
Fbru (e/D=2.0)	$Fbru20_1 := Tf1E \cdot \mathbf{132}ksi$	$Fbru20_1 = \mathbf{129.36} \cdot ksi$	$Fbru20_2 := Tf2E \cdot \mathbf{140}ksi$	$Fbru20_2 = \mathbf{137.2} \cdot ksi$
Fbry (e/D=1.5)	$Fbry15_1 := Tf1E \cdot \mathbf{81} \cdot ksi$	$Fbry15_1 = \mathbf{79.38} \cdot ksi$	$Fbry15_2 := Tf2E \cdot \mathbf{86} \cdot ksi$	$Fbry15_2 = \mathbf{84.28} \cdot ksi$
Fbry (e/D=2.0)	$Fbry20_1 := Tf1E \cdot \mathbf{97} \cdot ksi$	$Fbry20_1 = \mathbf{95.060} \cdot ksi$	$Fbry20_2 := Tf2E \cdot \mathbf{101} \cdot ksi$	$Fbry20_2 = \mathbf{98.980} \cdot ksi$

Modified Bearing Strength

$$Fbru_m_1 := if\left[e_D_1 > \mathbf{2.0}, Fbru20_1, if\left[(e_D_1 > \mathbf{1.5}) \cdot (e_D_1 < \mathbf{2.0}), Fbru15_1 + \frac{e_D_1 - \mathbf{1.5}}{\mathbf{2.0} - \mathbf{1.5}} \cdot (Fbru20_1 - Fbru15_1), \left[Fbru15_1 \cdot (e_D_1 - \mathbf{0.5})\right]\right]\right]$$

$$Fbru_m_2 := if\left[e_D_2 > \mathbf{2.0}, Fbru20_2, if\left[(e_D_2 > \mathbf{1.5}) \cdot (e_D_2 < \mathbf{2.0}), Fbru15_2 + \frac{e_D_2 - \mathbf{1.5}}{\mathbf{2.0} - \mathbf{1.5}} \cdot (Fbru20_2 - Fbru15_2), \left[Fbru15_2 \cdot (e_D_2 - \mathbf{0.5})\right]\right]\right]$$

$$Fbry_m_1 := if\left[e_D_1 > \mathbf{2.0}, Fbry20_1, if\left[(e_D_1 > \mathbf{1.5}) \cdot (e_D_1 < \mathbf{2.0}), Fbry15_1 + \frac{e_D_1 - \mathbf{1.5}}{\mathbf{2.0} - \mathbf{1.5}} \cdot (Fbry20_1 - Fbry15_1), \left[Fbry15_1 \cdot (e_D_1 - \mathbf{0.5})\right]\right]\right]$$

$$Fbry_m_2 := if\left[e_D_2 > \mathbf{2.0}, Fbry20_2, if\left[(e_D_2 > \mathbf{1.5}) \cdot (e_D_2 < \mathbf{2.0}), Fbry15_2 + \frac{e_D_2 - \mathbf{1.5}}{\mathbf{2.0} - \mathbf{1.5}} \cdot (Fbry20_2 - Fbry15_2), \left[Fbry15_2 \cdot (e_D_2 - \mathbf{0.5})\right]\right]\right]$$

$Fbru_m = \begin{pmatrix} \mathbf{100.94} \\ \mathbf{137.2} \end{pmatrix} \cdot ksi$ $\begin{pmatrix} \text{Plate1} \\ \text{Plate2} \end{pmatrix}$ *(Ultimate)*

$Fbry_m = \begin{pmatrix} \mathbf{79.38} \\ \mathbf{98.98} \end{pmatrix} \cdot ksi$ $\begin{pmatrix} \text{Plate1} \\ \text{Plate2} \end{pmatrix}$ *(Yield)*

$P_{bru} := \overrightarrow{(A_{br} \cdot Fbru_m)}$ $\quad P_{bru} = \begin{pmatrix} 1857 \\ 5963 \end{pmatrix} \cdot lbf$ *(Bearing Ultimate Allowable)*

$P_{bry} := \overrightarrow{(A_{br} \cdot Fbry_m)}$ $\quad P_{bry} = \begin{pmatrix} 1461 \\ 4302 \end{pmatrix} \cdot lbf$ *(Bearing Yield Allowable)*

Margin of Safety for Bearing Failure

$\mathbf{MS_{bru}} := \overrightarrow{\left(\frac{P_{bru}}{V \cdot SFu \cdot FF} - 1\right)}$ $\quad \mathbf{MS_{bru}} = \begin{pmatrix} 27.671 \\ 91.048 \end{pmatrix}$ $\begin{pmatrix} \text{Plate1} \\ \text{Plate2} \end{pmatrix}$

$MS_{bh_2} := \min(\mathbf{MS_{bru}})$ $\quad MS_{bh_2} = 27.671$ ***... Bearing Ultimate Strength***

$MS_{bry} := \overrightarrow{\left(\frac{P_{bry}}{V \cdot SFy \cdot FF} - 1\right)}$ $\quad MS_{bry} = \begin{pmatrix} 35.08 \\ 105.25 \end{pmatrix}$ $\begin{pmatrix} \text{Plate1} \\ \text{Plate2} \end{pmatrix}$

$MS_{bh_3} := \min(MS_{bry})$ $\quad MS_{bh_3} = 35.075$ ***... Bearing Yield Strength***

CHECK

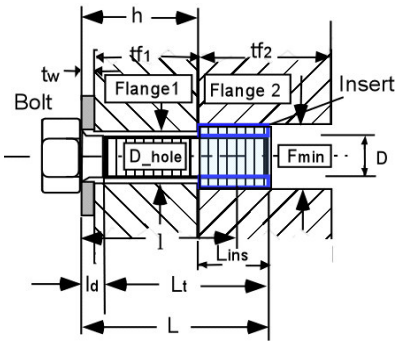

Note: Figure is for reference only.
Not to scale. Actual joint made differ.
Washer may be on nut side, head side, or both.

Bolt := **"NAS1351N3-10, .1900-32, .625L, HRES A286, 160ksi"**
Washer := **"NAS1149E0332R, 0.438 OD, 0.203 ID, 0.032 THK, A286"**
Insert := **"NASM21209F1-15L, .1900-32, .285L (1.5xDia), CRES "**

Flange_1 := **"Box S (base plate)"**
Part_Number_1 := **"unknown"**
Material_1 := **"AL ALY 7050-T7451"**
edge1 := **0.382**·in *(Minimum Edge Distance of Flange 1)*

Flange_2 := **"Standoff Bracket B"**
Part_Number_2 := **"SDG39137918-001"**
Material_2 := **"AL ALY 7075-T7351, AMS-QQ-Q-250/12, Plate, 1.00 Thk, A"**
edge2 := **0.285**·in *(Minimum Edge Distance of Flange 2)*

Methodology

The TRD Gas Ballistic Cover, SLG39137916-701, is attached to Box S with (3) Standoff Bracket A, SDG39137917-001, and (1) Standoff Bracket B, SDG39137918-301. All 4 brackets are AL ALY 7075-T7351. Each Standoff Bracket attaches to the Ballistic Cover by (2) NAS 1351N3LB10 fasteners with NAS1149E0332R washers, going into SOS-032-16 Self Clinching Standoffs in the TRD Gas Ballistic Cover.

A stand-alone FEM of the TRD Gas Ballistic Cover and Standoff Brackets was created. It was constrained at the 4 attachment points to Box S. Twenty-four g-load combinations, using the 40 (g) Load Factor from Table 4-4: Launch/Landing Design Limit Load Factors for Small Secondary Structures, JSC-28792, Rev. E, were analyzed.

The attachments between the Standoff Brackets and the TRD Gas Ballistic Cover are represented by Spider RBE3's (with the center dependent node given 6 dof T1 T2 T3 R1 R2 R3, and the outer independent nodes given T1 T2 T3) in the fastner holes of each flange, connected by CBush elements. The fastener loads between the Standoff Brackets and Cover are recovered as CBush Forces.

The largest absolute CBush Axial (P) load and the largest absolute Cbush Total Shear (V) load, are enveloped across all 4 Standoff Brackets, for all 24 load cases, and then used to calculate the Margins of Safety for the joints. Since each Bracket attaches to the Cover with two fasteners, for Fail-Safe Analysis, the worst case Axial and Total Shear loads were doubled and then used to calculate the Fail-Safe Margins of Safety for the joints.

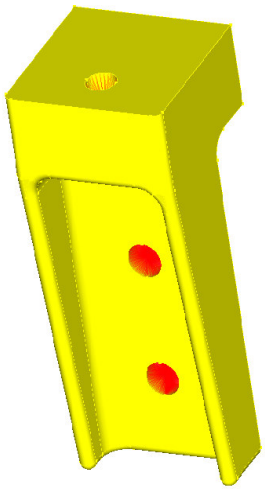

Allowables

Factors of Safety (reference)

$SFu := 2.00$ *(Ultimate Factor of Safety)*

$SFy := 1.25$ *(Yield Factor of Safety)*

$FF := 1.15$ *(Fitting Factor)*

$SFsep := 1.20$ *(Joint Separation)*

Temperature Data (reference)

$Temp_initial := 70 \cdot deg$ *(Assembly)*

$Temp_max := 140 \cdot deg$ *(Maximum)*

$Temp_min := -76 \cdot deg$ *(Minimum)*

Note: These are maximum temperatures that hardware sees. If maximum load occurs at a different temperature, this will be conservative.

Bolt Data (Bolt = **"NAS1351N3-10, .1900-32, .625L, HRES A286, 160ksi"**)

$D := .1900 \cdot in$ *(Nominal Diameter of Bolt)*

$Nt := 32 \cdot \frac{1}{in}$ *(Number of Threads/Inch)*

$D_shank := .1840 \cdot in$ *(Shank Diameter of Bolt)*

Note: If there is a retainer groove in the fastener, this should be the calculated diameter to give an equivalent cross sectional area.

$L := 0.625 \cdot in$ *(Total Length of Bolt)*

$Lt := 0.625 \cdot in$ *(Threaded Length - bolt is fully threaded, input Lt = L)*

$dw := 0.303 \cdot in$ *(Bolt Head Dia. Across Flats - dia of pressure boss if it exists, otherwise dia of head)*

$bh := 0.185 \cdot in$ *(Bolt Head Height - head height is 0 if bolt is flat head)*

Thread data lookup table is hidden
This file uses the data shown in \\escfil02\2i11_mathcad\8307_bolts\Rev_D\thread_data.mcd

Fri Apr 27 14:11:39 2007

Bolt Data (Bolt = **"NAS1351N3-10, .1900-32, .625L, HRES A286, 160ksi"**)

$TSu_bolt := 0.98$ $TSy_bolt := 0.98$ *(Temperature Correction Factor for Bolt Strength)*

$Ftu_bolt := 160000 \cdot psi$ $Fty_bolt := 120000 \cdot psi$ *(Bolt Ultimate Tensile Allowable Stress)*

$Fsu_bolt := 0.6 \cdot Ftu_bolt$ *(Bolt Ultimate Shear Allowable Stress)*

$TE_bolt := 0.98$ *(Temperature Correction Factor for Bolt Modulus)*

$E_bolt := \left(29.1 \cdot 10^{6} \cdot psi\right)$ *(Modulus of Elasticity of Bolt)*

$\beta_bolt_hot := 9.1 \cdot 10^{-6} \cdot \frac{\frac{in}{in}}{deg}$ $\beta_bolt_cold := 8.5 \cdot 10^{-6} \cdot \frac{\frac{in}{in}}{deg}$ *(Thermal Coefficients for Bolt)*

Washer Data (Washer = **"NAS1149E0332R, 0.438 OD, 0.203 ID, 0.032 THK, A286"** ***)***

Thickness of Washers

$twh := 0.064 \cdot in$ (Qty 2) *(Head)*

Note: This is the total washer thickness, if there are more than one.

Diameter of Washer Under Head

Note: If there is no washer, tw's, Dwo's, and Dwi's should be zero.

$Dwoh := 0.438 in$ *(Outer)*

$Dwih := 0.203 \cdot in$ *(Inner)*

Modulus of Elasticity

$E_washerh := \left(29.1 \cdot 10^{6} \cdot psi\right)$ *(Head)*

Temperature Correction Factor for Modulus

$TE_washerh := 0.98$ *(Head)* [same as bolt]

Insert Data (Insert = **"NASM21209F1-15L, .1900-32, .285L (1.5xDia), CRES "** ***)***

$Lins := 0.285 \cdot in$ *(Length of Insert)*

$Fmin := 0.236 \cdot in$ *(Min. External Diameter of Insert)*

$lr := 0.020 \cdot in$ *(Depth of Recess for Insert)*

$TS_ins := 0.98$ *(Temperature Correction Factor for Insert Strength)*

$Ftu_ins := 150000 \cdot psi$ *(Ultimate Tensile Allowable Stress)*

Note: See Procurment Specification NASM8846 3.2.2 Tensile Strength.

$Fsu_ins := 0.6 \cdot Ftu_ins$ *(Ultimate Shear Allowable Stress)*

Flange data (Stiffness of the joint depends upon number of members in the grip of the fasteners & their material properties)

Flange_1 = **"Box S (base plate)"**

Material_1 = **"AL ALY 7050-T7451"**

Flange_2 = **"Standoff Bracket B"**

Material_2 = **"AL ALY 7075-T7351, AMS-QQ-Q-250/12, Plate, 1.00 Thk, A"**

$D_hole := 0.190 \cdot in$ *(Diameter of Thru Hole in Flange 2)*

Thickness of Flanges

$tf1 := 0.2362 \cdot in$ *(6mm)*

$tf2 := 0.50 in$

Compressive Modulus of Elasticity

$E_flange1 := \left(10.6 \cdot 10^{6} \cdot psi\right)$

$E_flange2 := \left(10.6 \cdot 10^{6} \cdot psi\right)$

Temperature Correction Factor (Modulus)

$Tf1E := 0.98$

$Tf2E := 0.98$

Coefficient of thermal expansion for Flanges

$\beta_flange1_hot := 12.5 \cdot 10^{-6} \cdot \frac{\frac{in}{in}}{deg}$

$\beta_flange2_hot := 12.5 \cdot 10^{-6} \cdot \frac{\frac{in}{in}}{deg}$

$\beta_flange1_cold := 12.1 \cdot 10^{-6} \cdot \frac{\frac{in}{in}}{deg}$

$\beta_flange2_cold := 12.1 \cdot 10^{-6} \cdot \frac{\frac{in}{in}}{deg}$

$Fsu_f2 := 38000 \cdot psi$ *(Shear Strength of Flange 2, with Temperature Reduction)*

$Tf2s := 0.96$ *(If Unavailable, Use Temperature Reduction Factor for Ftu)*

Applied Loads (reference)

$P := 16.160 \cdot lbf$ *(Applied Tensile)* *(See A28.7.1.2.2 Fasteners - CBUSH Forces - Liftoff)*

CBush: ABS Axial Force - Standoff Brackets to Box S

ID	SUBCASE	AXIAL	SHEAR	MX	MY	MZ
6900018	**1018**	**-1.615968E+01**	8.002845E+00	-4.372622E-01	-5.185723E+00	-1.540430E+01

$V := 28.165 \cdot lbf$ *(Applied Shear)* *(See A28.7.1.1.2 Fasteners - CBUSH Forces - Landing)*

CBush: MAG Shear Force - Standoff Brackets to Box S

ID	SUBCASE	AXIAL	SHEAR	MX	MY	MZ
6900019	**2030**	-1.063413E+01	**2.816549E+01**	-7.659478E+00	1.026473E+02	-2.727308E+01

$M := 0.0 in \cdot lbf$ *(Applied Bending)*

Torque/Preload

(Shigley's "Mechanical Engineering Design")

$Tmax := 40.6 \cdot in \cdot lbf$ *(Maximum Torque)*

$Tmin := 34.5 in \cdot lbf$ *(Minimum Torque)*

$n := 0.5$ *(Loading Plane Factor)*

Joint is lubed

$u := 0.25$ *(Preload Uncertainty - 0.25 lubed)*

$k := 0.15$ *(Torque Coefficient - 0.15 lubed)*

Fri Apr 27 14:11:53 2007

Stiffness and Margin calculations are hidden
This file uses calculations shown in \\escfil02\2i11_mathcad\8307_bolts\Rev_D\bolt_insert_stiffness.mcd

Bolt Load

$= 0.391$ *(Bolt/Joint Stiffness Factor)*

$Pthr_pos = 110.6 \cdot lbf$ *(Preload Due to Temperature)*

$PLDmax = 1891 \cdot lbf$ *(Max. Preload)*

$Pthr_neg = -244.3 \cdot lbf$

$PLDmin = 575 \cdot lbf$ *(Min. Preload)*

$PLDnom = 1425 \cdot lbf$ *(Nom. Preload)*

$u = 0.250$ *(Uncertainty Factor)*

$PLDratio = 0.629$ *(Preload to Yield Ratio nom.)*

$k = 0.150$ *(Torque Coefficient)*

$Psep = 19.392 \cdot lbf$ *(Joint Separation Load)*

$n = 0.500$ *(Loading Plane Factor)*

$P = 16.160 \cdot lbf$ *(Applied Tensile Load on Bolt)*

$V = 28.165 \cdot lbf$ *(Applied Shear on Bolt)*

$M = 0.000 \cdot in \cdot lbf$ *(Applied Bending on Bolt)*

Max. Load on Bolt with Preload and Factor of Safety

$Pb = 1899 \cdot lbf$ *(Ultimate)*

$Pby = 1896 \cdot lbf$ *(Yield)*

Max. Load on Bolt With Preload WithOut Factor of Safety

$Pbapp = 1895 \cdot lbf$

Bolt Allowables

PAt = **3018**·lbf *(Bolt Ultimate Tensile Strength)* VAu = **1649**·lbf *(Bolt Shear Strength)*

PAs = **3854**·lbf *(Thread Pullout Strength)* MAu = **63**·in·lbf *(Bolt Bending Strength)*

General Checks

length_check = **"Bolt length is sufficient and insert fully engaged"**

cone_check = **"Joint pressure cone does not extend pass flange edge"**

preload_check = **"NOTE: Nominal preload < 65% of bolt yield strength"**

washer_check = **"Washer(s) under head do not extend past flange"**

insert_check = **"Flange two is thick enough for insert"**

Summary of Margins for Bolt

MS_1 = **31.02**	***...Joint Separation***	MS_6 = **102.7**	***...Direct Thread Shear Ultimate***
MS_2 = **80.2**	***...Direct Tension Ultimate***	MS_7 = **1.03**	***...Total Thread Shear Ultimate***
MS_3 = **96.45**	***...Direct Tension Yield***	MS_8 = **24.46**	***...Shear Ultimate***
MS_4 = **0.59**	***...Total Tension Ultimate***	MS_9 = **100**	***...Bending Ultimate***
MS_5 = **0.19**	***...Total Tension Yield***	MS_{10} = **0.59**	***...Combined Shear, Tension and Bending Ultimate***

Smallest Margin of Safety for Bolt and Failure Mode

MSbolt = **0.19** Failure_Mode = **"Total Tension Yield"**

Fail-Safe Analysis

Applied Fail-Safe Loads *(See A28.7.1.15.2 One Standoff Bracket to Box S Removed, Landing&Liftoff)*

$P_FS := 22.100 \cdot lbf$ *(Tensile)*

CBush: ABS Axial Force - Standoff Brackets

ID	SUBCASE	AXIAL	SHEAR	MX	MY	MZ
6900017	1030	-2.209999E+01	2.013635E+01	4.357716E+00	4.150701E+01	-2.257239E+01

$V_FS := 32.204 \cdot lbf$ *(Shear)*

CBush : MAG Shear Force - Standoff Brackets

ID	SUBCASE	AXIAL	SHEAR	MX	MY	MZ
6900017	2030	-1.687651E+01	3.220402E+01	7.005090E+00	7.577881E+01	-3.881357E+01

$M_FS := 0.0 \cdot in \cdot lbf$ *(Bending)*

Fail-Safe Factors of Safety

$SFu_FS := 1.0$ *(Ultimate)*

$SFsep_FS := 1.0$ *(Joint Separation)*

Fri Apr 27 14:12:08 2007

Fail Safe Margin calculations are hidden / stiffness & allowable data is not recalculated
This file calculations shown in \\escfil02\2i11_mathcad\8307_bolts\Rev_D\bolt_insert_stiffness__FS.mcd

Bolt Fail-Safe Load Data

$Psep_FS = 22.100 \cdot lbf$ *(Joint Separation Load)*

$Pb_FS = 1896.3 \cdot lbf$ *(Max. Ultimate Load on Bolt)*

Summary of Fail-Safe Margins for Bolt

$MS_FS_1 = 27.09$	***...Joint Separation***	$MS_FS_5 = 1.03$	***...Total Thread shear Ultimate***
$MS_FS_2 = 117.76$	***...Direct Tension Ultimate***	$MS_FS_6 = 43.54$	***...Shear Ultimate***
$MS_FS_3 = 0.59$	***...Total Tension Ultimate***	$MS_FS_7 = 10.00$	***...Bending Ultimate***
$MS_FS_4 = 150.65$	***...Direct Thread shear Ultimate***	$MS_FS_8 = 0.59$	***...Combined Shear, Tension and Bending Ultimate***

Smallest Fail-Safe Margin of Safety for Bolt and Failure Mode

$MSbolt_FS = 0.59$ Failure_Mode_FS = **"Combined Shear Tension Bending Ultimate"**

Bolt Hole Analysis

Recall Loads From Bolt Calculation

Safety Factors	SFu = **2.00**	*(Ultimate)*	SFy = **1.250**	*(Yield)*
	FF = **1.150**	*(Fitting Factor)*		
Input Loads	V = **28.2**·lbf	*(Shear Load)*	P = **16.2**·lbf	*(Axial Load)*
Bolt Calc Results	Pb = **1899**·lbf	*(Max Bolt Load)*		
Dimensions	L = **0.625**·in	*(Length of Bolt)*	twh = **0.064** in	*(Thickness of Washer)*

Recall Bolt Hole Dimensions

$tf_1 := tf1 \quad tf_1 = \mathbf{0.236}\,in$ *(Entire Thickness of Flange 1)* Tf1E = **0.980**

$tf_2 := tf2 \quad tf_2 = \mathbf{0.500}\,in$ *(Entire Thickness of Flange 2)* Tf2E = **0.980**

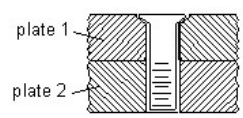

$edge_1 := edge1 \quad edge_1 = \mathbf{0.382}\,in$ *(Edge Distance for Hole in Flange 1)*

$edge_2 := edge2 \quad edge_2 = \mathbf{0.285}\,in$ *(Edge Distance for Hole in Flange 2)*

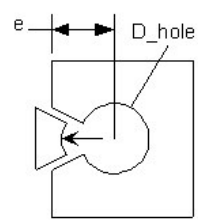

D = **0.190** in *(Diameter of Bolt)*

D_shank = **0.184** in *(Min. Shank Diameter of Bolt)*

D_hole = **0.190** in *(Diameter of Hole)*

Typical shear tear-out failure

Shear Tear-Out Check

Shear Area of the Mating Components (Ref. Analysis & Design of Flight Vehicle Structures, Bruhn, Pg. D1.5)

$$A_{shrpl} := \overrightarrow{\left[2\cdot tf\cdot\left(edge - \frac{1}{2}D_hole\right)\right]} \quad \begin{pmatrix}\text{Plate1}\\ \text{Plate2}\end{pmatrix} \qquad A_{shrpl} = \begin{pmatrix}\mathbf{0.136}\\ \mathbf{0.190}\end{pmatrix}\cdot in^2$$

Allowables for Flanges that Fastener Goes Through

$Fsu_1 := Tf1E\cdot \mathbf{43}\cdot ksi \qquad Fsu_1 = \mathbf{42.140}\cdot ksi$ *(Ultimate Shear Allowable for Flange 1)*

$Fsu_2 := Tf2E\cdot \mathbf{38}\cdot ksi \qquad Fsu_2 = \mathbf{37.240}\cdot ksi$ *(Ultimate Shear Allowable for Flange 2)*

$$P_{su} := \overrightarrow{\left(A_{shrpl}\cdot Fsu\right)} \qquad P_{su} = \begin{pmatrix}\mathbf{5713}\\ \mathbf{7076}\end{pmatrix}\cdot lbf$$ *(Shear Ultimate Allowable)*

Margin of Safety for Shear Tear-Out

$$MS_{su} := \overrightarrow{\left(\frac{P_{su}}{V\cdot SFu\cdot FF} - \mathbf{1}\right)} \quad \begin{pmatrix}\text{Plate1}\\ \text{Plate2}\end{pmatrix} \qquad MS_{su} = \begin{pmatrix}\mathbf{87.2}\\ \mathbf{108.23}\end{pmatrix}$$

$MS_{bh_1} := \min\left(MS_{su}\right) \qquad MS_{bh_1} = \mathbf{87.196}$ ***... Shear Tear-Out***

Bearing Check

Recall Bolt Hole Dimensions

$tf_1 = 0.236\,in$ *(Thickness of Flange 1)*

$tf_2 = 0.500\,in$ *(Thickness of Flange 2)*

$edge_1 = 0.382\,in$ *(Edge Distance for thru Hole in Flange 1)*

$edge_2 = 0.285\,in$ *(Edge Distance for tapped Hole in Flange 2)*

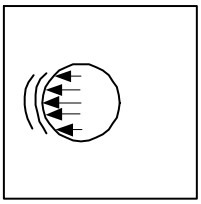

Typical Bearing Failure

$A_{br} := \overrightarrow{(tf \cdot \min(D, D_shank))}$ $\begin{pmatrix} \text{Plate1} \\ \text{Plate2} \end{pmatrix}$ $A_{br} = \begin{pmatrix} 0.043 \\ 0.092 \end{pmatrix} \cdot in^2$ *(Bearing Areas)*

$e_D := \overrightarrow{\frac{edge}{D_hole}}$ $e_D = \begin{pmatrix} 2.011 \\ 1.500 \end{pmatrix}$ *(e/D for Flanges)*

Bearing Allowables for Flanges that Fastener Goes Through

	Flange 1		Flange 2	
Fbru (e/D=1.5)	$Fbru15_1 := Tf1E \cdot 107ksi$	$Fbru15_1 = 104.86 \cdot ksi$	$Fbru15_2 := Tf2E \cdot 103ksi$	$Fbru15_2 = 100.94 \cdot ksi$
Fbru (e/D=2.0)	$Fbru20_1 := Tf1E \cdot 140ksi$	$Fbru20_1 = 137.2 \cdot ksi$	$Fbru20_2 := Tf2E \cdot 132ksi$	$Fbru20_2 = 129.36 \cdot ksi$
Fbry (e/D=1.5)	$Fbry15_1 := Tf1E \cdot 86 \cdot ksi$	$Fbry15_1 = 84.28 \cdot ksi$	$Fbry15_2 := Tf2E \cdot 81 \cdot ksi$	$Fbry15_2 = 79.38 \cdot ksi$
Fbry (e/D=2.0)	$Fbry20_1 := Tf1E \cdot 101 \cdot ksi$	$Fbry20_1 = 98.980 \cdot ksi$	$Fbry20_2 := Tf2E \cdot 97 \cdot ksi$	$Fbry20_2 = 95.060 \cdot ksi$

Modified Bearing Strength

$$Fbru_m_1 := if\left[e_D_1 > 2.0, Fbru20_1, if\left[(e_D_1 > 1.5)\cdot(e_D_1 < 2.0), Fbru15_1 + \frac{e_D_1 - 1.5}{2.0 - 1.5}\cdot(Fbru20_1 - Fbru15_1), \left[Fbru15_1\cdot(e_D_1 - 0.5)\right]\right]\right]$$

$$Fbru_m_2 := if\left[e_D_2 > 2.0, Fbru20_2, if\left[(e_D_2 > 1.5)\cdot(e_D_2 < 2.0), Fbru15_2 + \frac{e_D_2 - 1.5}{2.0 - 1.5}\cdot(Fbru20_2 - Fbru15_2), \left[Fbru15_2\cdot(e_D_2 - 0.5)\right]\right]\right]$$

$$Fbry_m_1 := if\left[e_D_1 > 2.0, Fbry20_1, if\left[(e_D_1 > 1.5)\cdot(e_D_1 < 2.0), Fbry15_1 + \frac{e_D_1 - 1.5}{2.0 - 1.5}\cdot(Fbry20_1 - Fbry15_1), \left[Fbry15_1\cdot(e_D_1 - 0.5)\right]\right]\right]$$

$$Fbry_m_2 := if\left[e_D_2 > 2.0, Fbry20_2, if\left[(e_D_2 > 1.5)\cdot(e_D_2 < 2.0), Fbry15_2 + \frac{e_D_2 - 1.5}{2.0 - 1.5}\cdot(Fbry20_2 - Fbry15_2), \left[Fbry15_2\cdot(e_D_2 - 0.5)\right]\right]\right]$$

$Fbru_m = \begin{pmatrix} 137.2 \\ 100.94 \end{pmatrix} \cdot ksi$ $\begin{pmatrix} \text{Plate1} \\ \text{Plate2} \end{pmatrix}$ *(Ultimate)*

$Fbry_m = \begin{pmatrix} 98.98 \\ 79.38 \end{pmatrix} \cdot ksi$ $\begin{pmatrix} \text{Plate1} \\ \text{Plate2} \end{pmatrix}$ *(Yield)*

$P_{bru} := \overrightarrow{(A_{br} \cdot Fbru_m)}$ $\quad P_{bru} = \begin{pmatrix} 5963 \\ 9286 \end{pmatrix} \cdot lbf$ *(Bearing Ultimate Allowable)*

$P_{bry} := \overrightarrow{(A_{br} \cdot Fbry_m)}$ $\quad P_{bry} = \begin{pmatrix} 4302 \\ 7303 \end{pmatrix} \cdot lbf$ *(Bearing Yield Allowable)*

Margin of Safety for Bearing Failure

$\mathbf{MS_{bru}} := \overrightarrow{\left(\frac{P_{bru}}{V \cdot SFu \cdot FF} - 1\right)}$ $\quad \mathbf{MS_{bru}} = \begin{pmatrix} 91.048 \\ 142.355 \end{pmatrix}$ $\begin{pmatrix} \text{Plate1} \\ \text{Plate2} \end{pmatrix}$

$MS_{bh_2} := \min(\mathbf{MS_{bru}})$ $\quad MS_{bh_2} = 91.048$ ***... Bearing Ultimate Strength***

$MS_{bry} := \overrightarrow{\left(\frac{P_{bry}}{V \cdot SFy \cdot FF} - 1\right)}$ $\quad MS_{bry} = \begin{pmatrix} 105.25 \\ 179.38 \end{pmatrix}$ $\begin{pmatrix} \text{Plate1} \\ \text{Plate2} \end{pmatrix}$

$MS_{bh_3} := \min(MS_{bry})$ $\quad MS_{bh_3} = 105.25$ ***... Bearing Yield Strength***

Rivet Analysis

Rivet := **"NAS 1398BFC6-3, Rivet Blind, Protruding Head, Locked Spindle, .190 Dia, .126 Grip, .350 L, AL)"**

Flange_1 := **"Outer Skin Splice Plates"**
Part_Number_1_1 := **"SDG39137927/8/9"**
Material_1 := **"AL ALY 6061-T651, AMS-QQ-A-250/11"**

Flange_2 := **"TRD Gas Ballistic Cover - Outer Skin"**
Part_Number_2 := **"SLG39137916-503"**
Material_2 := **"AL ALY 6061-T6, SAE-AMS-4027"**

$D_hole := \mathbf{0.191} \cdot in$ $c_1 := \mathbf{0.310} \cdot in$ *(edge to hole center)* $c_2 := \mathbf{0.310} \cdot in$ *(edge to hole center)*

$edge_1 := c_1 - \frac{D_hole}{2}$ $edge_2 := c_2 - \frac{D_hole}{2}$

$edge_1 = \mathbf{0.215}\, in$ *Minimum edge distance of flange one* $edge_2 = \mathbf{0.215}\, in$ *Minimum edge distance of flange two*

Methodology

The TRD Gas Ballistic Cover Outer Skin has 8 Angle Brackets SDG39137927, SDG39137928, SDG39137929, which support the Outer Skin where it is folded. All 8 Angle Brackets are .120 thick AL ALY 6061-T651; use NAS 1398BFC6-3 rivets which go through 0.191 holes.
Each rivet was modeled in NASTRAN as two spider RBE2s connected by a CBUSH. 64 Lift Off and 64 Landing load conditions were analyzed using the Integrated Loads FEM.
The worst worst case Axial (P) and Total Shear (V) loads from the CBUSH's were enveloped for all the rivets, for all 8 Angle Brackets, for all 128 load cases. The worst case P and the worst case V were used together to calculate the tensile and shear margins of safety.
For Fail-Safe Analysis, the worst worst case P and V from the fail-safe NASTRAN runs were used together to calculate the tensile and shear fail-safe margins of safety.

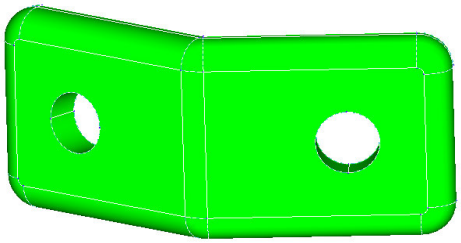

Allowables

Rivet Strengths (Spindle AL ALY 7075, QQ-A-430)

$F_{su} := \mathbf{640} \cdot lbf$ *(Minimum Shear Strength)* *(Per Document NAS1400, Table III)*

$F_{tu} := \mathbf{540} \cdot lbf$ *(Minimum Tensile Strength)* *(Per Document NAS1400, Table IV)*

Factors of Safety (reference)

$FS_u := \mathbf{2.00}$ *(Ultimate Factor of Safety)*

$FS_y := \mathbf{1.25}$ *(Yield Factor of Safety)*

$FF := \mathbf{1.15}$ *(Fitting Factor of Safety)*

Temperature Data (reference)

$Temp_initial := 70 \cdot deg$ *(Assembly)*

$Temp_max := 140 \cdot deg$ *(Maximum)*

$Temp_min := -76 \cdot deg$ *(Minimum)*

Note: these are maximum temperatures that hardware sees / if maximum load occurs at a different temperature this will be conservative

Temperature Reduction Factors

Note: For the Debris Shield, the temperature extremes are -76°F to 140°F. These temperature reduction factors are conservative for liftoff/landing conditions.

$\beta_u := 0.99$ *(Ultimate Temperature Reduction Factor)* *(Ref. MMPDS-03, Figure 3.2.3.1.4)*

$\beta_y := 0.99$

Allowable Strengths With Temperature Reduction Factor

$F_{sug} := \beta_u \cdot F_{su}$ $F_{sug} = 634\ lbf$ *(Shear Strength Allowable)*

$F_{tug} := \beta_u \cdot F_{tu}$ $F_{tug} = 535\ lbf$ *(Tensile Strength Allowable)*

Loads (reference)

Landing

(Reference: Rivet Hole Loads, "Splice Plates.xmcdz", pp. 5.10.3-56)

Rivet hole loads

$MaxShear_j := \sqrt{(Fx_j)^2 + (Fy_j)^2}$ $max(MaxShear) = 23.41\ lbf$ $min(MaxShear) = 0.04\ lbf$

$MaxTension_j := \sqrt{(Fz_j)^2}$ $max(MaxTension) = 14.659\ lbf$ $min(MaxTension) = 0\ lbf$

Liftoff

Rivet hole loads

$MaxShear_j := \sqrt{(Fx_j)^2 + (Fy_j)^2}$ $max(MaxShear) = 10.548\ lbf$ $min(MaxShear) = 0.03\ lbf$

$MaxTension_j := \sqrt{(Fz_j)^2}$ $max(MaxTension) = 7.363\ lbf$ $min(MaxTension) = 0.001\ lbf$

$P := 14.7 \cdot lbf$ *(Applied Tensile Load)* *(Worst Case Combination)*

$V := 23.4 \cdot lbf$ *(Applied Shear Load)*

$M := 0 in \cdot lbf$ *(Applied Bending Moment)*

Margin of Safety

$$MS_{ult} := \frac{F_{tug}}{FS_u \cdot FF \cdot P} - 1$$

$MS_{ult} = 14.81$ ***...Tensile Ultimate Margin of Safety***

$$MS_{shear} := \frac{F_{sug}}{FS_u \cdot FF \cdot V} - 1$$

$MS_{shear} = 10.77$ ***...Shear Ultimate Margin of Safety***

Fail-Safe Analysis

Fail-Safe Factors of Safety

$FSu_FS := 1.00$ *(Ultimate)*

Fail-Safe Loads

(Reference: Landing, Rivet Hole Loads, "Splice Plates.xmcdz", pp. 5.10.3-62)

$P_FS := 17.412 \cdot lbf$ *(Applied Tensile Load)*

$V_FS := 28.074 \cdot lbf$ *(Applied Shear Load)*

$M_FS := 0.0 \cdot in \cdot lbf$ *(Applied Bending Moment)*

Fail-Safe Margin of Safety

$$MS_FS_{ult} := \frac{F_{tug}}{FSu_FS \cdot FF \cdot P_FS} - 1$$

$MS_FS_{ult} = 25.7$ ***...Fail-Safe Tensile Ultimate Margin of Safety***

$$MS_FS_{shear} := \frac{F_{sug}}{FSu_FS \cdot FF \cdot V_FS} - 1$$

$MS_FS_{shear} = 18.63$ ***...Fail-Safe Shear Ultimate Margin of Safety***

Rivet Hole Analysis

Safety Factors	$FS_u = \mathbf{2.00}$	*(Ultimate)*	$FS_y = \mathbf{1.250}$	*(Yield)*
	$FF = \mathbf{1.150}$	*(Fitting Factor)*		
Input Loads	$V = \mathbf{23.4}\,lbf$	*(Shear Load)*	$P = \mathbf{14.7}\,lbf$	*(Axial Load)*
Dimensions	$L := \mathbf{0.350}\cdot in$	*(Length Max)*	$twh := \mathbf{0.00}\cdot in$	*(Thickness of Washer)*

Bolt Hole Dimensions

$tf_1 := \mathbf{0.125}\cdot in$ *(Entire Thickness of Flange 1)* $Tf1E := \mathbf{0.99}$

$tf_2 := \mathbf{0.040}\cdot in$ *(Entire Thickness of Flange 2)* $Tf2E := \mathbf{0.99}$

$edge_1 = \mathbf{0.215}\,in$ *(Edge Distance for Hole in Flange 1)*

$edge_2 = \mathbf{0.215}\,in$ *(Edge Distance for Hole in Flange 2)*

$D := \mathbf{0.190}\cdot in$ *(Diameter of Bolt)*

$D_shank := \mathbf{0.187}\cdot in$ *(Min. Shank Diameter of Bolt)*

$D_hole = \mathbf{0.191}\,in$ *(Diameter of Hole)*

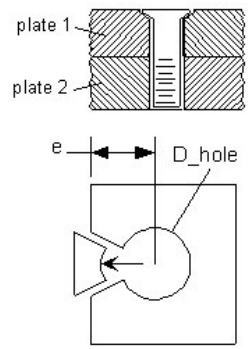

Typical shear tear-out failure

Shear Tear-Out Check

Shear Area of the Mating Components (Ref. Analysis & Design of Flight Vehicle Structures, Bruhn, Pg. D1.5)

$$A_{shrpl} := \overrightarrow{\left[2\cdot tf\cdot\left(edge - \frac{1}{2}D_hole\right)\right]} \quad \begin{pmatrix} Plate1 \\ Plate2 \end{pmatrix} \qquad A_{shrpl} = \begin{pmatrix} \mathbf{0.030} \\ \mathbf{0.010} \end{pmatrix} in^{\mathbf{2.000}}$$

Allowables for Flanges that Fastener Goes Through

$F_{su_1} := Tf1E\cdot \mathbf{27}\cdot ksi$ $\quad F_{su_1} = \mathbf{26.730}\,ksi$ *(Ultimate Shear Allowable for Flange 1)*

$F_{su_2} := Tf2E\cdot \mathbf{27}\cdot ksi$ $\quad F_{su_2} = \mathbf{26.730}\,ksi$ *(Ultimate Shear Allowable for Flange 2)*

$$P_{su} := \overrightarrow{\left(A_{shrpl}\cdot F_{su}\right)} \qquad P_{su} = \begin{pmatrix} \mathbf{795} \\ \mathbf{254} \end{pmatrix} lbf$$ *(Shear Ultimate Allowable)*

Margin of Safety for Shear Tear-Out

$$MS_{su} := \overrightarrow{\left(\frac{P_{su}}{V \cdot FS_u \cdot FF} - 1\right)} \qquad \begin{pmatrix} \text{Plate1} \\ \text{Plate2} \end{pmatrix} \qquad MS_{su} = \begin{pmatrix} 13.78 \\ 3.73 \end{pmatrix}$$

$$MS_{bh_1} := \min(MS_{su}) \qquad MS_{bh_1} = 3.728$$

... Shear Tear-Out

Bearing Check

Recall Bolt Hole Dimensions

$tf_1 = 0.125\,in$ *(Thickness of Flange 1)*

$tf_2 = 0.040\,in$ *(Thickness of Flange 2)*

$edge_1 = 0.215\,in$ *(Edge Distance for thru Hole in Flange 1)*

$edge_2 = 0.215\,in$ *(Edge Distance for tapped Hole in Flange 2)*

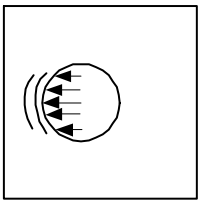

Typical Bearing Failure

$$A_{br} := \overrightarrow{(tf \cdot \min(D, D_shank))} \qquad \begin{pmatrix} \text{Plate1} \\ \text{Plate2} \end{pmatrix} \qquad A_{br} = \begin{pmatrix} 0.023 \\ 0.007 \end{pmatrix} in^2$$

(Bearing Areas)

$$e_D := \overrightarrow{\frac{edge}{D_hole}} \qquad e_D = \begin{pmatrix} 1.123 \\ 1.123 \end{pmatrix}$$

(e/D for Flanges)

Bearing Allowables for Flanges that Fastener Goes Through

	Flange 1		Flange 2	
Fbru (e/D=1.5)	$Fbru15_1 := Tf1E \cdot 67ksi$	$Fbru15_1 = 66.33\,ksi$	$Fbru15_2 := Tf2E \cdot 67ksi$	$Fbru15_2 = 66.33\,ksi$
Fbru (e/D=2.0)	$Fbru20_1 := Tf1E \cdot 88ksi$	$Fbru20_1 = 87.12\,ksi$	$Fbru20_2 := Tf2E \cdot 88ksi$	$Fbru20_2 = 87.12\,ksi$
Fbry (e/D=1.5)	$Fbry15_1 := Tf1E \cdot 50 \cdot ksi$	$Fbry15_1 = 49.5\,ksi$	$Fbry15_2 := Tf2E \cdot 50 \cdot ksi$	$Fbry15_2 = 49.5\,ksi$
Fbry (e/D=2.0)	$Fbry20_1 := Tf1E \cdot 58 \cdot ksi$	$Fbry20_1 = 57.420\,ksi$	$Fbry20_2 := Tf2E \cdot 58 \cdot ksi$	$Fbry20_2 = 57.420\,ksi$

Modified Bearing Strength

$$Fbru_m_1 := if\left[e_D_1 > 2.0, Fbru20_1, if\left[(e_D_1 > 1.5)\cdot(e_D_1 < 2.0), Fbru15_1 + \frac{e_D_1 - 1.5}{2.0 - 1.5}\cdot(Fbru20_1 - Fbru15_1), \left[Fbru15_1\cdot(e_D_1 - 0.5)\right]\right]\right]$$

$$Fbru_m_2 := if\left[e_D_2 > 2.0, Fbru20_2, if\left[(e_D_2 > 1.5)\cdot(e_D_2 < 2.0), Fbru15_2 + \frac{e_D_2 - 1.5}{2.0 - 1.5}\cdot(Fbru20_2 - Fbru15_2), \left[Fbru15_2\cdot(e_D_2 - 0.5)\right]\right]\right]$$

$$Fbry_m_1 := if\left[e_D_1 > 2.0, Fbry20_1, if\left[(e_D_1 > 1.5)\cdot(e_D_1 < 2.0), Fbry15_1 + \frac{e_D_1 - 1.5}{2.0 - 1.5}\cdot(Fbry20_1 - Fbry15_1), \left[Fbry15_1\cdot(e_D_1 - 0.5)\right]\right]\right]$$

$$Fbry_m_2 := if\left[e_D_2 > 2.0, Fbry20_2, if\left[(e_D_2 > 1.5)\cdot(e_D_2 < 2.0), Fbry15_2 + \frac{e_D_2 - 1.5}{2.0 - 1.5}\cdot(Fbry20_2 - Fbry15_2), \left[Fbry15_2\cdot(e_D_2 - 0.5)\right]\right]\right]$$

$$Fbru_m = \begin{pmatrix} 41.326 \\ 41.326 \end{pmatrix} ksi \quad \begin{pmatrix} Plate1 \\ Plate2 \end{pmatrix}$$ *(Ultimate)*

$$Fbry_m = \begin{pmatrix} 30.84 \\ 30.84 \end{pmatrix} ksi \quad \begin{pmatrix} Plate1 \\ Plate2 \end{pmatrix}$$ *(Yield)*

$$P_{bru} := \overrightarrow{\left(A_{br}\cdot Fbru_m\right)} \qquad P_{bru} = \begin{pmatrix} 966 \\ 309 \end{pmatrix} lbf$$ *(Bearing Ultimate Allowable)*

$$P_{bry} := \overrightarrow{\left(A_{br}\cdot Fbry_m\right)} \qquad P_{bry} = \begin{pmatrix} 721 \\ 231 \end{pmatrix} lbf$$ *(Bearing Yield Allowable)*

Margin of Safety for Bearing Failure

$$\mathbf{MS_{bru}} := \overrightarrow{\left(\frac{P_{bru}}{V\cdot FS_u\cdot FF} - 1\right)} \qquad \mathbf{MS_{bru}} = \begin{pmatrix} 16.949 \\ 4.744 \end{pmatrix} \quad \begin{pmatrix} Plate1 \\ Plate2 \end{pmatrix}$$

$$MS_{bh_2} := \min\left(\mathbf{MS_{bru}}\right) \qquad MS_{bh_2} = 4.744$$ ***... Bearing Ultimate Strength***

$$MS_{bry} := \overrightarrow{\left(\frac{P_{bry}}{V\cdot FS_y\cdot FF} - 1\right)} \qquad MS_{bry} = \begin{pmatrix} 20.43 \\ 5.86 \end{pmatrix} \quad \begin{pmatrix} Plate1 \\ Plate2 \end{pmatrix}$$

$$MS_{bh_3} := \min\left(MS_{bry}\right) \qquad MS_{bh_3} = 5.858$$ ***... Bearing Yield Strength***

5.11 STS and ISS Integration Hardware Bolt Analysis

Section 5.11 STS and ISS Integration Hardware Bolt Analysis

The STS and ISS Integration Hardware Bolt Analysis is performed in the following report sections.

5.11.2	PVGF to PVGF Bracket
5.11.2	PVGF to PVGF Bracket Fail Safe
5.11.3	PVGF Bracket to Upper Trunnion Bridge Beam
5.11.3	PVGF Bracket to Upper Trunnion Bridge Beam Fail Safe
5.11.4	FRGF to FRGF Bracket
5.11.4	FRGF to FRGF Bracket Fail Safe
5.11.5	FRGF Bracket to Upper Trunnion Bridge Beam
5.11.5	FRGF Bracket to Upper Trunnion Bridge Beam Fail Safe
5.11.6	ROEU Fastener Analysis
5.11.6.1	ROEU Arm Flange to Sill Joint
5.11.6.1	ROEU Arm Flange to Sill Joint (Fail-Safe)
5.11.6.2	ROEU Bearing Failure Analysis
5.11.6.3	ROEU PDA Bracket, Pin, and Lug Analysis
5.11.6.4	ROEU Assembly Harness Bracket and Bolt Analysis
5.11.9	Scuff Plate to Sill Joint Bolt Analysis
5.11.9	Scuff Plate to Sill Joint Bolt Analysis Fail Safe
5.11.11	Interface Panel A to USS-02 Trunnion Bridge Beam
5.11.11	Interface Panel A to USS-02 Trunnion Bridge Beam Fail-Safe

5.11.1 Intentionally Left Blank

Intentionally Left Blank

5.11.2 PVGF to PVGF Bracket

Intentionally Left Blank

Section 5.11.2

PVGF Bracket to PVGF Bolt Analysis

CHECK BOLTS (EWB0420-6-17 0.375"-24 x 1.7195 L Material-A-286), Nut Plate MS21060L6, Washer 200003-XX CRES 15-5PH (Along with thermal washer)

Analysis : The fasteners connecting the PVGF bracket to the PVGF will be analyzed. The tension and shear on the bolts will be calculated. This analysis only includes the 6 fasteners shown in the figure below.

Bolt Geometry

size thread/in

$$bolt := \begin{pmatrix} 0.375 & 24 \\ 0.375 & 24 \\ 0.375 & 24 \\ 0.375 & 24 \\ 0.375 & 24 \\ 0.375 & 24 \end{pmatrix}$$

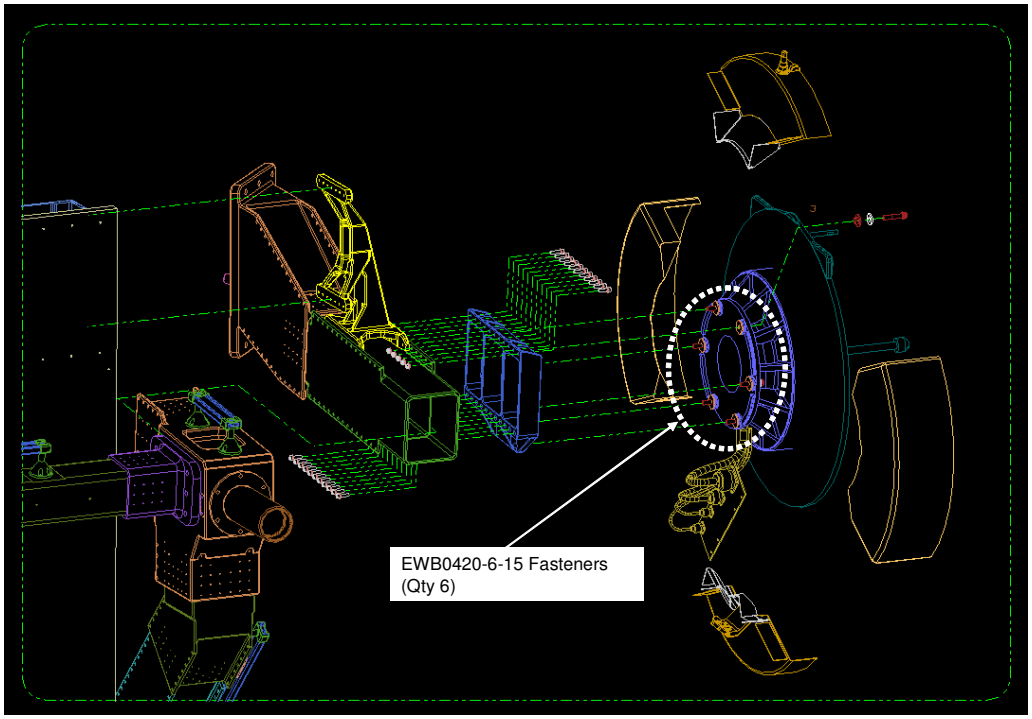

$i := 1 .. rows(bolt)$

$N_i := bolt_{i,2} \cdot \frac{1}{in}$ pitch of bolt

$D_i := bolt_{i,1} \cdot in$ bolt diameter

$At_i := \beta \cdot \left(\frac{D_i - 0.9743 \cdot \frac{1}{N_i}}{2} \right)^2$ Tensile Area of bolt

$As_i := \beta \cdot \left(\frac{D_i - 1.299038 \cdot \frac{1}{N_i}}{2} \right)^2$ Shear Area of bolt

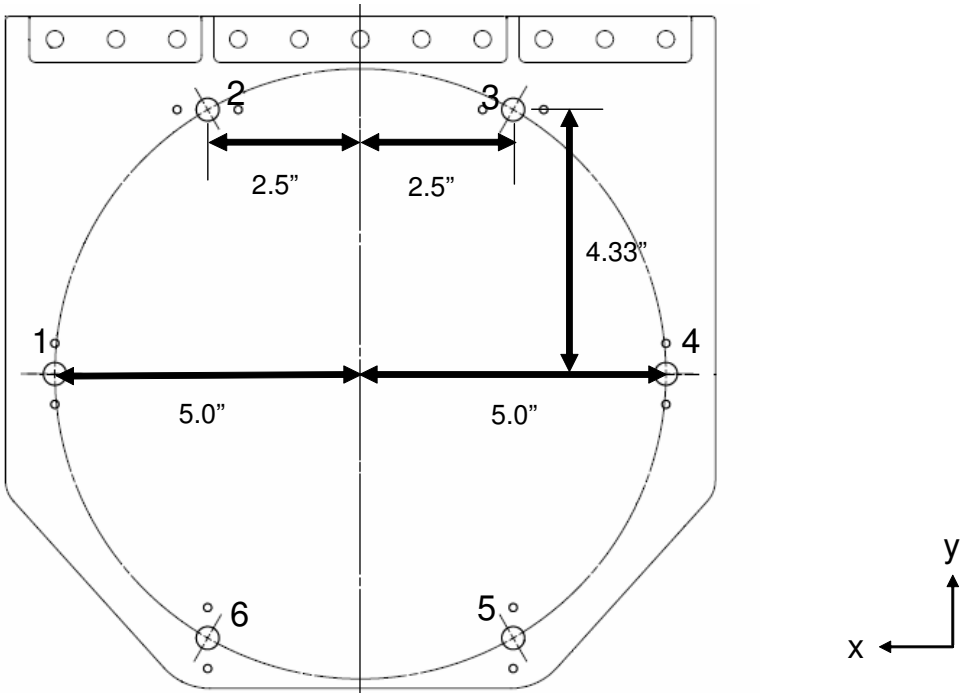

Bolt Pattern

Bolt no.	x co-ord	y co-ord	z co-ord
1	−5.0	0	0
2	−2.5	4.33	0
3	2.5	4.33	0
4	5.0	0	0
5	2.5	−4.33	0
6	−2.5	−4.33	0

$$x := \begin{pmatrix} -5.0 \\ -2.5 \\ 2.5 \\ 5.0 \\ 2.5 \\ -2.5 \end{pmatrix} \cdot in \qquad y := \begin{pmatrix} 0 \\ 4.33 \\ 4.33 \\ 0 \\ -4.33 \\ -4.33 \end{pmatrix} \cdot in \qquad z := \begin{pmatrix} 0 \\ 0 \\ 0 \\ 0 \\ 0 \\ 0 \end{pmatrix} \cdot in$$

Location of applied forces and moments

$xforce := 0.0in \qquad yforce := 0.0in \qquad zforce := 0.0in$

$$cgload := \begin{pmatrix} xforce \\ yforce \\ zforce \end{pmatrix} \qquad cgload = \begin{pmatrix} 0 \\ 0 \\ 0 \end{pmatrix}$$

Center of gravity of bolt group

$$xcg := \frac{\sum_i x_i}{rows(x)} \qquad xcg = 0\,in \qquad ycg := \frac{\sum_i y_i}{rows(y)} \qquad ycg = 0\,in \qquad zcg := \frac{\sum_i z_i}{rows(z)} \qquad zcg = 0\,in$$

$$cg_{bolt} := \begin{pmatrix} xcg \\ ycg \\ zcg \end{pmatrix} \qquad cg_{bolt} = \begin{pmatrix} 0 \\ 0 \\ 0 \end{pmatrix} in$$

Load Vector

$$r_{load} := cgload - cg_{bolt} \qquad r_{load} = \begin{pmatrix} 0 \\ 0 \\ 0 \end{pmatrix} in$$

Distance from CG of Bolts to Individual Bolts for shear calculations

$$r_i := \sqrt{\left(x_i - xcg\right)^2 + \left(y_i - ycg\right)^2} \qquad r = \begin{pmatrix} 5.000 \\ 5.000 \\ 5.000 \\ 5.000 \\ 5.000 \\ 5.000 \end{pmatrix} in$$

Reading database file

The following file reads in all the loads:

data := READPRN("centerloads-pv.txt")

num_bolts := rows(bolt) $\qquad$ j := 1 .. rows(data)

* Note that "centerloads-pv.txt" is generated from NASPOST result (.LIS file) by just removing all words and comments. This file is archived along with the other analysis files.

Loads from loads model

Shear in X axis $Fx_j := data_{j,3} \cdot lbf$

Shear in Y axis $Fy_j := data_{j,4} \cdot lbf$

Axial Load $Fz_j := data_{j,5} \cdot lbf$

Moment about X axis $Mx_j := data_{j,6} \cdot in \cdot lbf$

Moment about Y axis $My_j := data_{j,8} \cdot in \cdot lbf$

Torsion $Mz_j := data_{j,7} \cdot in \cdot lbf$

Extrapolation of Moments:

Distance from RBE $dist := 1.0 \cdot in$

Extrapolation of My Moment: $My_j := My_j + Fx_j \cdot dist$

Extrapolation of Mx Moment: $Mx_j := Mx_j + Fy_j \cdot dist$

Element Identification $ID_j := data_{j,1}$

$ID_j := ID_j \cdot 1000 + 1$ Counter for number of bolts in pattern

Load Case Number $LC_j := data_{j,2}$

Applied Bending Moment at Bolts $M_j := 0 \cdot in \cdot lbf$

Format of Output File

The stack commands below are used to stack the element identifications (ID) and load cases (LC) in asending order per bolt. The element ID number is located in the first column and the LC numbers in the second column.

$ID := stack(ID, ID + 1, ID + 2, ID + 3, ID + 4, ID + 5)$

$LC := stack(LC, LC, LC, LC, LC, LC)$

Moment Distribution

$$M_{tot}^{\langle j \rangle} := \begin{pmatrix} Mx_j \\ My_j \\ Mz_j \end{pmatrix} + r_{load} \times \begin{pmatrix} Fx_j \\ Fy_j \\ Fz_j \end{pmatrix}$$

Use the cross-product to determine the additional moments acting on the fasteners.

$Mx_boltcg_j := M_{tot_{1,j}}$ $\quad$ $My_boltcg_j := M_{tot_{2,j}}$ $\quad$ $Mz_boltcg_j := M_{tot_{3,j}}$

Tension on bolts

$$Ftdirect_{i,j} := \begin{cases} 0 \cdot lbf & \text{if } Fz_j \le 0lbf \\ \dfrac{Fz_j}{num_bolts} & \text{otherwise} \end{cases}$$

Direct tensile load calculation - (The if statement checks for compression)

$$Fmz_{i,j} := \begin{cases} 0 \cdot lbf & \text{if } (y_i - ycg) = 0 \cdot in \\ \dfrac{\left[Mx_boltcg_j \cdot (y_i - ycg)\right] At_i}{\sum_i \left[(y_i - ycg)^2 \cdot At_i\right]} & \end{cases}$$

$$Fmy_{i,j} := \begin{cases} 0 \cdot lbf & \text{if } (x_i - xcg) = 0 \cdot in \\ \dfrac{My_boltcg_j \cdot (x_i - xcg) \cdot At_i}{\sum_i \left[(x_i - xcg)^2 \cdot At_i\right]} & \end{cases}$$

$$Ft_{i,j} := Ftdirect_{i,j} + Fmz_{i,j} + Fmy_{i,j}$$

Total Tensile load

Shear on bolts

Direct shear Loads $\quad$ $$Fsd_{i,j} := \frac{\sqrt{(Fy_j)^2 + (Fx_j)^2}}{num_bolts}$$

Secondary shear on bolts $\quad$ $$Fs_{i,j} := \frac{\left|Mz_boltcg_j\right| \cdot r_i \cdot As_i}{\sum_i \left[(r_i)^2 \cdot (As_i)\right]}$$

Total shear load $\quad$ $$Fstot_{i,j} := Fs_{i,j} + Fsd_{i,j}$$

The stack commands below are used to stack applied axial load (P), applied shear load (V), and applied moment (M) in asending order per bolt. These loads are put into an array with the element/bolt number and load case number from above.

$$P := \text{stack}\left[\left(Ft^T\right)^{\langle 1\rangle}, \left(Ft^T\right)^{\langle 2\rangle}, \left(Ft^T\right)^{\langle 3\rangle}, \left(Ft^T\right)^{\langle 4\rangle}, \left(Ft^T\right)^{\langle 5\rangle}, \left(Ft^T\right)^{\langle 6\rangle}\right]$$

$$V := \text{stack}\left[\left(Fstot^T\right)^{\langle 1\rangle}, \left(Fstot^T\right)^{\langle 2\rangle}, \left(Fstot^T\right)^{\langle 3\rangle}, \left(Fstot^T\right)^{\langle 4\rangle}, \left(Fstot^T\right)^{\langle 5\rangle}, \left(Fstot^T\right)^{\langle 6\rangle}\right]$$

$$M := \text{stack}(M, M, M, M, M, M)$$

The "Output" file outputs an array from left to right starting with the element identification (ID), Load case number (LC), applied load on the bolt (P), applied shear on the bolt (V), and applied moment on the bolt (M). The array is then written to a text file.

$$\text{Output} := \text{augment}\left(ID, LC, \frac{P}{lbf}, \frac{V}{lbf}, \frac{M}{in \cdot lbf}\right)$$

(Note: Since the ID and LC numbers are dimensionless, the P, V, and M values are divided by their units in order to make the array dimensionless.)

Size of the "Output" Array: $\text{rows}(\text{Output}) = 396$

WRITEPRN("centerboltloads-pv.txt") := Output

Prepared By	Name	Date	Engineering and Science Contract Group	File Name
	G. Reyes	11/21/07		6-EWB0420-6-17.mcd
Checked By	C. Bala		*Structural Analysis Section*	Drawing No. SDG39135860
Title	**AMS-02 PVGF Bracket - Bolt Analysis**			

CHECK BOLTS (EWB0420-6-17 0.375"-24 x 1.7195 L Material-A-286), Nut Plate MS21060L6, Washer 200003-XX CRES 15-5PH (Along with thermal washer)

data := READPRN("centerboltloads-pv.txt")

s := 1 .. rows(data)

Flange 1: PVGF
Part number: Drawing not provided
Material: Titanium (Assume Ti-6Al-4V)

Flange 2: PVGF Bracket
Part number: SDG39135860
Material: Al Alloy 7075-T7351

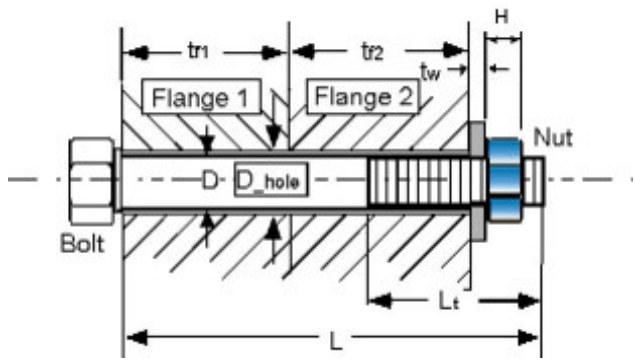

Loads

Applied tensile load $P_s := data_{s,3} \cdot lbf$ $ID_s := data_{s,1}$

Applied shear load $V_s := data_{s,4} \cdot lbf$ $LC_s := data_{s,2}$

Applied bending moment $M_s := data_{s,5} \cdot in \cdot lbf$

Factors of Safety

Ultimate $SFu := 2.0$ Yield $SFy := 1.25$

Joint Separation $SFsep := 1.2$ Fitting factor $FF := 1.15$

Temperature data

Assembly $Temp_initial := 70 \cdot deg$

Maximum $Temp_max := 225 \cdot deg$

Minimum $Temp_min := -65 \cdot deg$

Bolt and Nut Data

Nominal diameter of bolt $D := 0.375 \cdot in$ Number of threads/inch $Nt := 24 \cdot \frac{1}{in}$

Total length of bolt $L := 1.7195 \cdot in$ Height of nut $H := 0.344 \cdot in$

Threaded length $Lt := 0.657 \cdot in$

(If bolt is fully threaded, input Lt = L)

This file uses the calculations shown in \\escfil02\2i11_mathcad\08307_bolts\thread_data.mcd

Washer Data

Thickness of washers $tw := 0.1 \cdot in$

Outer Diameter of washer $Dw := 1.25in$

Inner Diameter of washer $Dwi := 0.391 \cdot in$

Flange data

Thickness of flange 1 $tf1 := 0.9 \cdot in$

Thickness of flange 2 $tf2 := 0.25in$

Diameter of hole $D_hole := 0.377 \cdot in$

Bolt head dia. across flats $dw := 0.0 \cdot in$ (used only if there is no washer)

Note: If there is no washer tw, Dw and Dwi should be zero

Prepared By	Name	Date		File Name
	G. Reyes	11/21/07	Engineering and Science Contract Group	6-EWB0420-6-17.mcd
Checked By	C. Bala		*Structural Analysis Section*	Draw ing No. SDG39135860
Title	**AMS-02 PVGF Bracket - Bolt Analysis**			

Material Property Data

Bolt

Temperature correction factor for bolt strength ultimate. $TSu_bolt := 0.96$ Yield $TSy_bolt := 0.96$

Bolt ultimate tensile allowable stress $Ftu_bolt := 200000 \cdot psi$

Bolt ultimate shear allowable stress $Fsu_bolt := 0.6 \cdot Ftu_bolt$

Bolt yield Tensile allowable stress $Fty_bolt := 180000 \cdot psi$

Temperature correction factor for bolt modulus $TE_bolt := 0.96$

Modulus of elasticity of bolt $E_bolt := \left(29.1 \cdot 10^{6} \cdot psi\right)$ Thermal coeffecient for bolt $u_bolt_hot := 9.2 \cdot 10^{-6} \cdot \frac{\frac{in}{in}}{deg}$

Nut

Temperature correction factor for nut strength $TS_nut := 0.96$ $u_bolt_cold := 8.55 \cdot 10^{-6} \cdot \frac{\frac{in}{in}}{deg}$

Ultimate tensile allowable stress $Ftu_nut := 125000 \cdot psi$

Ultimate Shear allowable stress: $Fsu_nut := 0.6 \cdot Ftu_nut$

Ultimate axial strength of nut $Ptu_nut := 11450 \cdot lbf$ (Ref. MS21060)

Washer

Temperature correction factor for washer modulus $TE_washer := 1.0$

Modulus of elasticity of washer: $E_washer := \left(28.5 \cdot 10^{6} \cdot psi\right)$

Flanges

Stiffness of the joint depends upon number of members in the grip of the fasteners, Modulus of elasticity of these members, and diameters of the bolt and the washer.

Temperature correction factor for flange 1 $Tf1E := 0.94$ (modulus)

Temperature correction factor for flange 2 $Tf2E := 0.95$

Modulus of elasticity for the parts in the joint $E_flange1 := \left(16.0 \cdot 10^{6} \cdot psi\right)$ $E_flange2 := \left(10.3 \cdot 10^{6} \cdot psi\right)$

Coefficient of thermal expansion for flanges $u_flange1_hot := 5.05 \cdot 10^{-6} \cdot \frac{\frac{in}{in}}{deg}$ $u_flange2_hot := 12.8 \cdot 10^{-6} \cdot \frac{\frac{in}{in}}{deg}$

$u_flange1_cold := 4.7 \cdot 10^{-6} \cdot \frac{\frac{in}{in}}{deg}$ $u_flange2_cold := 12.05 \cdot 10^{-6} \cdot \frac{\frac{in}{in}}{deg}$

Torque/Preload data

Maximum torque (49% of Yield) $Tmax := 435 \cdot in \cdot lbf$

Minimum torque (85% of Max Torque) $Tmin := 370 in \cdot lbf$

Loading plane factor $n := 0.5$

Preload Uncertainty $:= 0.25$

Torque coefficient $k := 0.15$

This file uses the calculations shown in \\escfil02\2i11_mathcad\08307_bolts\multi_bolt_stiffness_nut_RevC

Bolt Load data

Bolt/joint stiffness factor	$= = 0.111$	Preload due to temperature	$Pthr_pos = 735.4\,lbf$
Max. preload	$PLDmax = 10402\,lbf$		$Pthr_neg = -924.2\,lbf$
Min. preload	$PLDmin = 3525.8\,lbf$	Uncertainty factor	$= 0.25$
Joint separation load	$max(Psep) = 2233.8\,lbf$	Torque coefficient	$k = 0.15$
Max. load on the bolt(ultimate)	$max(Pb) = 10640.7\,lbf$	Loading plane factor	$n = 0.5$
Max. load on the bolt(yield)	$max(Pby) = 10551.2\,lbf$	Thread pullout strength required to develop full strength of bolt	$PAs = 19797.9\,lbf$
Bolt ultimate tensile strength	$PAt = 10992\,lbf$	Nut ultimate tensile strength	$Ptu_nut = 10992\,lbf$

Length_check = "Bolt length is sufficient"

Summary of Margins for bolt:

Joint separation	$MS_min_{1,1} = 0.454$	Direct Thread shear Ultimate	$MS_min_{6,1} = 3.624$
Direct Tension Ultimate	$MS_min_{2,1} = 1.567$	Total Thread shear Ultimate	$MS_min_{7,1} = 0.861$
Direct Tension Yield	$MS_min_{3,1} = 4.549$	Shear Ultimate	$MS_min_{8,1} = 4.83$
Total Tension Ultimate	$MS_min_{4,1} = 0.033$	Bending Ultimate	$MS_min_{9,1} = 10$
Total Tension Yield	$MS_min_{5,1} = 0.407$	Combined shear, tension and bending ultimate	$MS_min_{10,1} = 0.033$

Determination of the smallest margin of safety for the bolt, and the failure mode:

$MSbolt := min(MS)$

$MSbolt = 0.03$

Failure_Mode = "Combined Shear Tension Bending Ultimate"

$MS_min_ID = 19511004$	Element Identification (19511) and Bolt Number (4) for Minimum Margin
$MS_min_LC = 5036$	Load Case Number for Minimum Margin
$MS_min_P = 1861.5$	Applied Tensile Load for Minimum Margin
$MS_min_V = 0$	Applied Shear Load for Minimum Margin
$MS_min_M = 0$	Applied Bending Moment for Minimum Margin

Bolt Fail Safe Analysis for PVGF Bracket to PVGF

Since bolt number 4 has the lowest margin of safety, it is assumed that this bolt will be the first bolt to fail. There are now 5, EWB0420 0.375"-24 fasteners, holding the PVGF to the PVGF bracket.

Bolt Geometry

size thread/in

$$bolt2 := \begin{pmatrix} 0.375 & 24 \\ 0.375 & 24 \\ 0.375 & 24 \\ 0.375 & 24 \\ 0.375 & 24 \end{pmatrix}$$

$$s := 1 .. rows(bolt2)$$

$$N2_s := bolt2_{s,2} \cdot \frac{1}{in}$$ pitch of bolt

$$D2_s := bolt2_{s,1} \cdot in$$ bolt diameter

$$At2_s := \beta \cdot \left(\frac{D2_s - 0.9743 \cdot \frac{1}{N2_s}}{2} \right)^2$$ Tensile Area of bolt

$$As2_s := \beta \cdot \left(\frac{D2_s - 1.299038 \cdot \frac{1}{N2_s}}{2} \right)^2$$ Shear Area of bolt

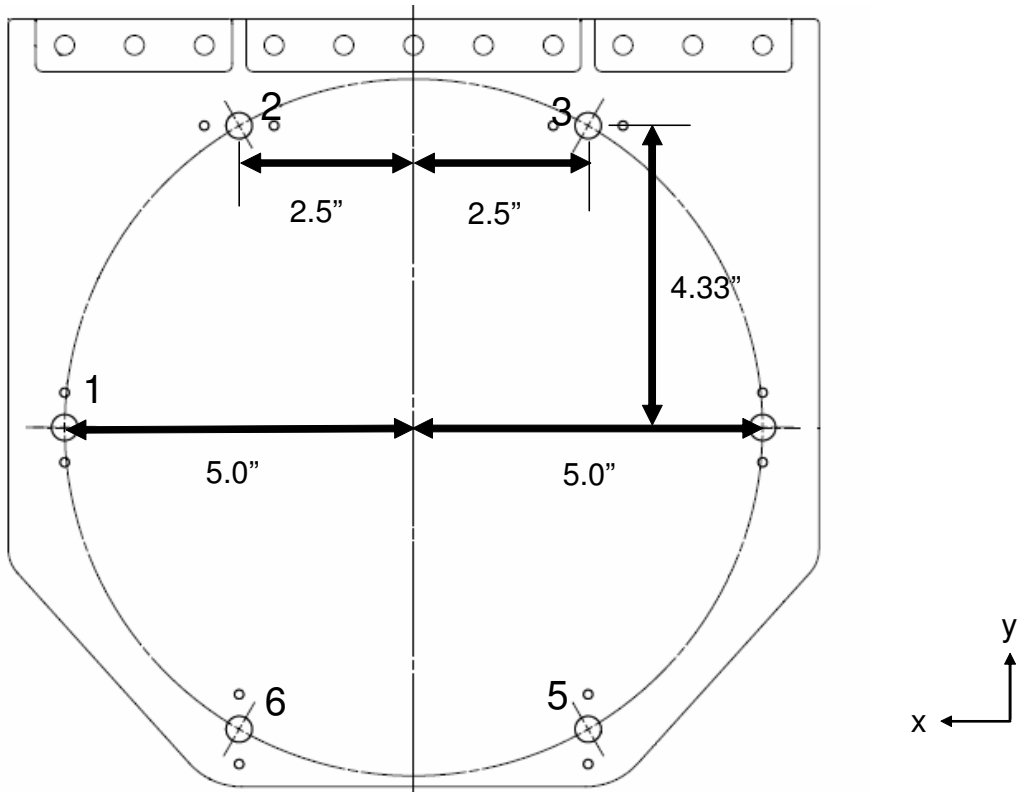

Bolt Pattern

Bolt no.	x co-ord	y co-ord	z co-ord
$\begin{pmatrix}1\\2\\3\\5\\6\end{pmatrix}$	$x2 := \begin{pmatrix}-5.0\\-2.5\\2.5\\2.5\\-2.5\end{pmatrix}\cdot in$	$y2 := \begin{pmatrix}0\\4.33\\4.33\\-4.33\\-4.33\end{pmatrix}\cdot in$	$z2 := \begin{pmatrix}0\\0\\0\\0\\0\end{pmatrix}\cdot in$

Location of applied forces and moments

$xforce2 := 0.0in$ $\quad yforce2 := 0.0in$ $\quad zforce2 := 0.0in$

$$cgload2 := \begin{pmatrix}xforce2\\yforce2\\zforce2\end{pmatrix} \qquad cgload2 = \begin{pmatrix}0\\0\\0\end{pmatrix}$$

Center of gravity of bolt group

$$xcg2 := \frac{\sum_s x2_s}{rows(x2)} \qquad xcg2 = -1\,in \qquad ycg2 := \frac{\sum_s y2_s}{rows(y2)} \qquad ycg2 = 0\,in \qquad zcg2 := \frac{\sum_s z2_s}{rows(z2)} \qquad zcg2 = 0\,in$$

$$cg_{bolt2} := \begin{pmatrix} xcg2 \\ ycg2 \\ zcg2 \end{pmatrix} \qquad cg_{bolt2} = \begin{pmatrix} -1 \\ 0 \\ 0 \end{pmatrix} in$$

Load Vector

$$r_{load2} := cgload2 - cg_{bolt2} \qquad r_{load2} = \begin{pmatrix} 1 \\ 0 \\ 0 \end{pmatrix} in$$

Distance from CG of Bolts to Individual Bolts for shear calculations

$$r2_s := \sqrt{\left(x2_s - xcg2\right)^2 + \left(y2_s - ycg2\right)^2} \qquad r2_s = \begin{pmatrix} 4.000 \\ 4.582 \\ 5.568 \\ 5.568 \\ 4.582 \end{pmatrix} in$$

Reading database file

The following file reads in all the loads:

data := READPRN("centerloads-fail-pv.txt")

num_bolts2 := rows(bolt2) q := 1 .. rows(data)

* Note that "centerloads-fail-pv.txt" is generated from NASPOST result (.LIS file) by just removing all words and comments. This file is archived along with the other analysis files.

Loads from loads model

Shear in X axis $Fx2_q := data_{q,3} \cdot lbf$

Shear in Y axis $Fy2_q := data_{q,4} \cdot lbf$

Axial Load $Fz2_q := data_{q,5} \cdot lbf$

Moment about Z axis $Mx2_q := data_{q,6} \cdot in \cdot lbf$

Moment about Y axis $My2_q := data_{q,8} \cdot in \cdot lbf$

Torsion $Mz2_q := data_{q,7} \cdot in \cdot lbf$

Extrapolation of Moments:

Distance from RBE $dist2 := 1.0 \cdot in$

Extrapolation of My Moment: $My2_q := My2_q + Fx2_q \cdot dist2$

Extrapolation of Mx Moment: $Mx2_q := Mx2_q + Fy2_q \cdot dist$

Element Identification $ID2_q := data_{q,1}$ $ID2_q := ID2_q \cdot 1000 +$ Counter for number of bolts in pattern

Load Case Number $LC2_q := data_{q,2}$

Applied Bending Moment at Bolts $M2_q := 0 \cdot in \cdot lbf$

Format of Output File

The stack commands below are used to stack the element identifications (ID) and load cases (LC) in asending order per bolt. The element ID number is located in the first column and the LC numbers in the second column.

$ID2 := stack(ID2, ID2 + 1, ID2 + 2, ID2 + 4, ID2 + 5)$

$LC2 := stack(LC2, LC2, LC2, LC2, LC2)$

Moment Distribution

$$M_{tot2}^{\langle q \rangle} := \begin{pmatrix} Mx2_q \\ My2_q \\ Mz2_q \end{pmatrix} + r_{load2} \times \begin{pmatrix} Fx2_q \\ Fy2_q \\ Fz2_q \end{pmatrix}$$

Use the cross-product to determine the additional moments acting on the fasteners.

$Mx_boltcg2_q := M_{tot2_{1,q}}$ $\quad My_boltcg2_q := M_{tot2_{2,q}}$ $\quad Mz_boltcg2_q := M_{tot2_{3,q}}$

Tension on bolts

$$Ftdirect2_{s,q} := \begin{cases} 0 \cdot lbf & \text{if } Fz2_q \le 0lbf \\ \dfrac{Fz2_q}{num_bolts2} & \text{otherwise} \end{cases}$$

Direct tensile load calculation - (The if statement checks for compression)

$$Fmz2_{s,q} := \begin{cases} 0 \cdot lbf & \text{if } \left(y2_s - ycg2\right) = 0 \cdot in \\ \dfrac{\left[Mx_boltcg2_q \cdot \left(y2_s - ycg2\right)\right] At2_s}{\sum_s \left[\left(y2_s - ycg2\right)^2 \cdot At2_s\right]} & \end{cases}$$

$$Fmy2_{s,q} := \begin{cases} 0 \cdot lbf & \text{if } \left(x2_s - xcg2\right) = 0 \cdot in \\ \dfrac{My_boltcg2_q \cdot \left(x2_s - xcg2\right) \cdot At2_s}{\sum_s \left[\left(x2_s - xcg2\right)^2 \cdot At2_s\right]} & \end{cases}$$

$Ft2_{s,q} := Ftdirect2_{s,q} + Fmz2_{s,q} + Fmy2_{s,q}$ Total Tensile load

Shear on bolts

Direct shear Loads $\quad Fsd2_{s,q} := \dfrac{\sqrt{\left(Fy2_q\right)^2 + \left(Fx2_q\right)^2}}{num_bolts2}$

Secondary shear on bolts $\quad Fs2_{s,q} := \dfrac{Mz_boltcg2_q \cdot r2_s \cdot As2_s}{\sum_s \left[\left(r2_s\right)^2 \cdot \left(As2_s\right)\right]}$

Total shear load $\quad Fstot2_{s,q} := Fs2_{s,q} + Fsd2_{s,q}$

The stack commands below are used to stack applied axial load (P2), applied shear load (V2), and applied moment (M2) in asending order per bolt. These loads are put into an array with the element/bolt number and load case number from above.

$$P2 := \text{stack}\left[\left(Ft2^T\right)^{\langle 1\rangle}, \left(Ft2^T\right)^{\langle 2\rangle}, \left(Ft2^T\right)^{\langle 3\rangle}, \left(Ft2^T\right)^{\langle 4\rangle}, \left(Ft2^T\right)^{\langle 5\rangle}\right]$$

$$V2 := \text{stack}\left[\left(Fstot2^T\right)^{\langle 1\rangle}, \left(Fstot2^T\right)^{\langle 2\rangle}, \left(Fstot2^T\right)^{\langle 3\rangle}, \left(Fstot2^T\right)^{\langle 4\rangle}, \left(Fstot2^T\right)^{\langle 5\rangle}\right]$$

$$M2 := \text{stack}(M2, M2, M2, M2, M2)$$

The "Output2" file outputs an array from left to right starting with the element identification (ID2), Load case number (LC2), applied load on the bolt (P2), applied shear on the bolt (V2), and applied moment on the bolt (M2). The array is then written to a text file.

$$Output2 := \text{augment}\left(ID2, LC2, \frac{P2}{lbf}, \frac{V2}{lbf}, \frac{M2}{in \cdot lbf}\right)$$

(Note: Since the ID and LC numbers are dimensionless, the P, V, and M values are divided by their units in order to make the array dimensionless.)

Size of the "Output2" Array: $\text{rows}(Output2) = 330$

$$\text{WRITEPRN}(\text{"centerboltloads-fail-pv.txt"}) := Output2$$

Fail-safe Analysis

data_fs := READPRN("centerboltloads-fail-pv.txt")

s := 1 .. rows(data_fs)

Fail-safe Loads

Applied tensile load $P_FS_s := data_fs_{s,3} \cdot lbf$ $ID_FS_s := data_fs_{s,1}$

Applied shear load $V_FS_s := data_fs_{s,4} \cdot lbf$ $LC_FS_s := data_fs_{s,2}$

Applied bending moment $M_FS_s := data_fs_{s,5} \cdot in \cdot lbf$

Fail-safe Factors of Safety

Ultimate SFu_FS := 1.0

Joint Separation SFsep_FS := 1.0

This file uses the calculations shown in \\escfil02\2i11_mathcad\8307_bolts\ multi_bolt_stiffness_nut_FS_RevC

Bolt Fail-safe Load data

Joint separation load max(Psep_FS) = 2497 lbf

Max. load on the bolt(ultimate) max(Pb_FS) = 10562.1 lbf

Summary of fail-safe Margins for bolt:

Joint separation	$MS_minFS_{1,1} = 0.300$	Total Thread shear Ultimate	$MS_minFS_{5,1} = 0.874$
Direct Tension Ultimate	$MS_minFS_{2,1} = 2.828$	Shear Ultimate	$MS_minFS_{6,1} = 7.35$
Total Tension Ultimate	$MS_minFS_{3,1} = 0.041$	Bending Ultimate	$MS_minFS_{7,1} = 10$
Direct Thread shear Ultimate	$MS_minFS_{4,1} = 5.89$	Combined shear, tension and bending ultimate	$MS_minFS_{8,1} = 0.0407$

Determination of the smallest fail-safe margin of safety for the bolt, and the failure mode:

MSbolt_FS := min(MS_FS)

MSbolt_FS = 0.041

Failure_Mode_FS = "Combined Shear Tension Bending Ultimate"

MS_min_ID = 19511001	Element Identification (19511) and Bolt Number (1) for Minimum Margin
MS_min_LC = 5034	Load Case Number for Minimum Margin
MS_min_P = 2497	Applied Tensile Load for Minimum Margin
MS_min_V = 0	Applied Shear Load for Minimum Margin
MS_min_M = 0	Applied Bending Moment for Minimum Margin

5.11.3 PVGF Bracket to Upper Trunnion Bridge Beam

Section 5.11.3

PVGF Bracket to Upper Trunnion Bridge Beam Bolt Analysis

CHECK BOLTS (NAS1351N4H14 0.25"-28 x 0.875L Material-A-286), Insert MS51831CA202L, Washer NAS1149E0463R

Analysis : The fasteners connecting the PVGF bracket to the Upper Trunnion Bridge Beam will be analyzed. The tension and shear on the bolts will be calculated. This analysis only includes the 11 fasteners shown in the figure below.

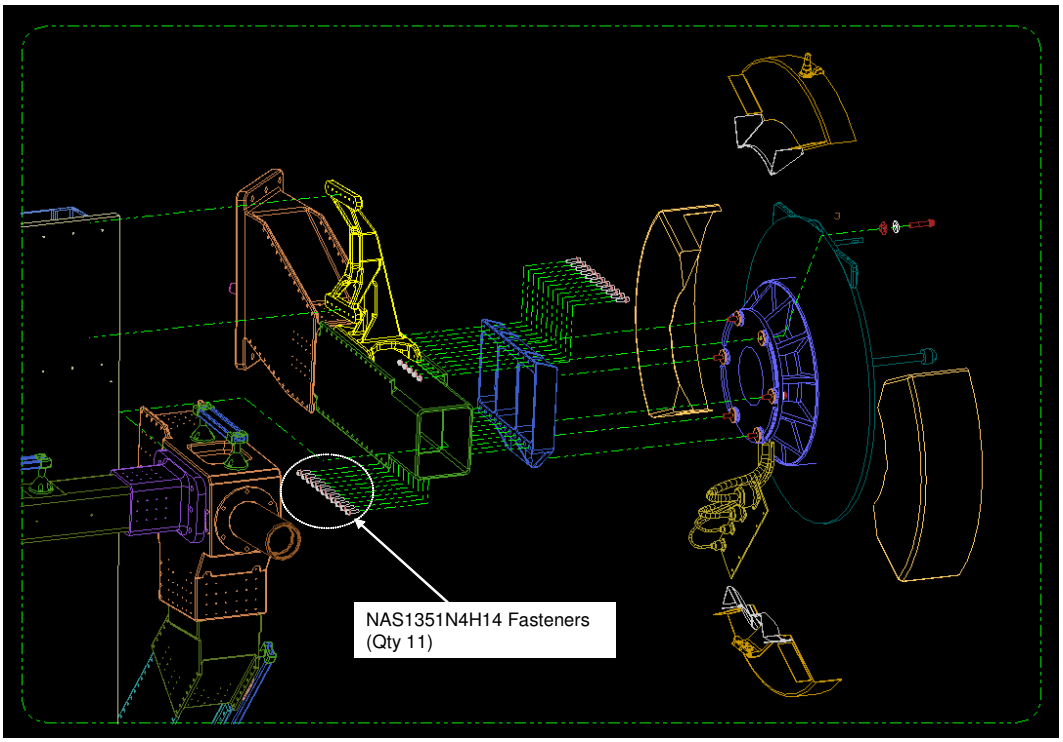

Loads : Bolt forces were sorted by maximum absolute value on all three axes. The tensile load and shear load were calculated for the worse case. All bolt forces reference the Global Coordinate System.

Read in the external datum from NASPOST results:

$loads := READPRN("11fst\text{-}pv.txt")$

$i := 1..rows(loads)$ $\quad rows(loads) = 726$ $\quad j := 2..cols(loads)$ $\quad cols(loads) = 10$

$ID := loads^{\langle 1 \rangle}$ $\quad Fx := loads^{\langle 3 \rangle} \cdot lbf$ $\quad Fz := loads^{\langle 5 \rangle} \cdot lbf$ $\quad My := loads^{\langle 7 \rangle} \cdot in \cdot lbf$

$LC := loads^{\langle 2 \rangle}$ $\quad Fy := loads^{\langle 4 \rangle} \cdot lbf$ $\quad Mx := loads^{\langle 6 \rangle} \cdot in \cdot lbf$ $\quad Mz := loads^{\langle 8 \rangle} \cdot in \cdot lbf$

* Note that "12fst.txt" is generated from NASPOST result (.LIS file) by just removing all words and comments.

$Ft_i := \left|Fz_i\right|$ $\quad max(Ft) = 1023.5\,lbf$ $\quad$ Tensile Load

$Fv_i := \sqrt{\left(Fy_i\right)^2 + \left(Fx_i\right)^2}$ $\quad max(Fv) = 499.5\,lbf$ $\quad$ Shear Load

CHECK BOLTS (NAS1351N4H14 0.25"-28 x 0.875L Material-A-286), Insert MS51831CA202L, Washer NAS1149E0463R

Flange 1: Upper Trunnion Bridge Beam
Part number: SDG39135728
Material: Al Alloy 7075-T73511 Extrusion

Flange 2: PVGF Bracket
Part number: SDG39135860
Material: Al Alloy 7075-T7351

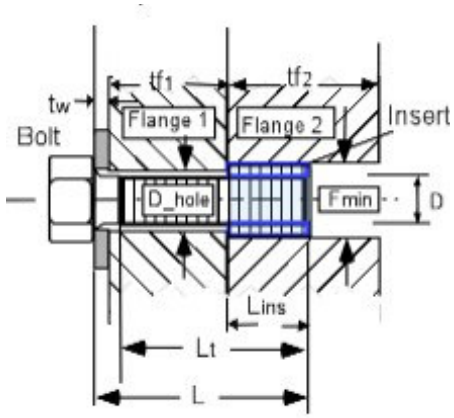

Loads

Applied tensile load $P := 1023.5 \cdot lbf$

Applied shear load $V := 499.5 \cdot lbf$

Applied bending moment $M := 0 \cdot in \cdot lbf$

Factors of Safety

Ultimate $SFu := 2.0$ Yield $SFy := 1.25$

Joint Separation $SFsep := 1.2$ Fitting factor $FF := 1.15$

Temperature data

Assembly $Temp_initial := 70 \cdot deg$

Maximum $Temp_max := 225 \cdot deg$

Minimum $Temp_min := -65 \cdot deg$

Bolt and Insert Data

Nominal diameter of bolt $D := 0.250 \cdot in$

Number of threads/inch $Nt := 28 \cdot \frac{1}{in}$

Total length of bolt $L := 0.875 \cdot in$

Length of insert $Lins := 0.375 \cdot in$

Threaded length $Lt := 0.875 \cdot in$

Min. external diameter of insert $Fmin := 0.375 \cdot in$

(If bolt is fully threaded, input Lt = L)

Depth of recess for insert $lr := 0.02 \cdot in$

This file uses the calculations shown in \\escfil02\2i11_mathcad\8307_bolts\thread_data.mcd

Tue Feb 15 10:38:17 AM 2005

Washer Data

Thickness of washer $tw := 0.063 \cdot in$

Outer Diameter of washer $Dw := 0.50in$

Inner Diameter of washer $Dwi := 0.265 \cdot in$

Bolt head dia. across flats $dw := 0.365 \cdot in$ (used only if there is no washer)

Flange data

Thickness of flange 1 $tf1 := 0.25 \cdot in$

Thickness of flange 2 $tf2 := 0.375in$

Diameter of hole $D_hole := 0.288 \cdot in$

Note: If there is no washer, tw, Dw, and Dwi should be zero.

Material Property Data

Bolt

Temperature correction factor for bolt strength ultimate $TSu_bolt := 0.96$ yield $TSy_bolt := 0.96$

Bolt ultimate tensile allowable stress $Ftu_bolt := 160000 \cdot psi$

Bolt ultimate shear allowable stress $Fsu_bolt := 0.6 \cdot Ftu_bolt$

Bolt yield tensile allowable $Fty_bolt := 120000 \cdot psi$

Temperature correction factor for bolt modulus $TE_bolt := 0.96$

Modulus of elasticity of bolt $E_bolt := \left(29.1 \cdot 10^{6} \cdot psi\right)$ Thermal coefficient for bolt: $\beta_bolt_hot := 9.2 \cdot 10^{-6} \cdot \frac{\frac{in}{in}}{deg}$

$\beta_bolt_cold := 8.55 \cdot 10^{-6} \cdot \frac{\frac{in}{in}}{deg}$

Insert

Temperature correction factor for insert strength $TS_ins := 0.96$

Ultimate tensile allowable stress $Ftu_ins := 140000 \cdot psi$

Ultimate shear allowable stress $Fsu_ins := 0.6 \cdot Ftu_ins$

Washer

Temperature correction factor for washer modulus $TE_washer := 0.96$

Modulus of elasticity of washer $E_washer := \left(29.1 \cdot 10^{6} \cdot psi\right)$

Flanges

Stiffness of the joint depends upon number of members in the grip of the fasteners, Modulus of elasticity of these members, and diameters of the bolt and the washer.

Temperature correction factor for flange 1 $Tf1E := 0.96$ (modulus) $Tf2s := 0.87$ (strength)

Temperature correction factor for flange 2 $Tf2E := 0.95$ (modulus) $Fsu_f2 := 39000 \cdot psi$

Modulus of elasticity for the parts in the joint $E_flange1 := \left(10.4 \cdot 10^{6} \cdot psi\right)$ $E_flange2 := \left(10.3 \cdot 10^{6} \cdot psi\right)$

Coefficient of thermal expansion for flanges $\beta_flange1_hot := 12.8 \cdot 10^{-6} \cdot \frac{\frac{in}{in}}{deg}$ $\beta_flange2_hot := 12.8 \cdot 10^{-6} \cdot \frac{\frac{in}{in}}{deg}$

$\beta_flange1_cold := 12.05 \cdot 10^{-6} \cdot \frac{\frac{in}{in}}{deg}$ $\beta_flange2_cold := 12.05 \cdot 10^{-6} \cdot \frac{\frac{in}{in}}{deg}$

Torque/Preload data

Maximum torque (61% of Yield) $Tmax := 100 \cdot in \cdot lbf$ Loading plane factor: $n := 0.5$

Minimum torque (92% of Max Torque) $Tmin := 92 \cdot in \cdot lbf$ Preload Uncertainty: $u := 0.25$

Torque coefficient: $k := 0.15$

This file uses the calculations shown in \\escfil02\2i11_mathcad\8307_bolts\bolt_stiffness_insert_RevC

Bolt Load data

Bolt/joint stiffness factor	$= 0.286$	Preload due to temperature	$Pthr_pos = 486.4\,lbf$
Max. preload	$PLDmax = 3819.7\,lbf$		$Pthr_neg = -411.8\,lbf$
Min. preload	$PLDmin = 1261.5\,lbf$	Uncertainty factor	$u = 0.25$
Joint separation load	$Psep = 1.228 \times 10^3\,lbf$	Torque coefficient	$k = 0.15$
Max. load on the bolt(ultimate)	$Pb = 4156.8\,lbf$	Loading plane factor	$n = 0.5$
Max. load on the bolt(yield)	$Pby = 4030.4\,lbf$	Thread shear pullout load of bolt or insert	$Pths = 15570.9\,lbf$
Bolt ultimate tensile strength	$PAt = 5419.4\,lbf$	Thread shear pullout load in parent metal	$Ppths = 7494.9\,lbf$

Length_check = "Bolt length is sufficient"

Summary of Margins for bolt:

Joint separation	$MS_1 = 0.04$	Direct Thread shear Ultimate	$MS_6 = 2.18$
Direct Tension Ultimate	$MS_2 = 1.3$	Total Thread shear Ultimate	$MS_7 = 0.8$
Direct Tension Yield	$MS_3 = 1.76$	Shear Ultimate	$MS_8 = 1.61$
Total Tension Ultimate	$MS_4 = 0.3$	Bending Ultimate	$MS_9 = 10$
Total Tension Yield	$MS_5 = 0.008$	Combined shear, tension and bending ultimate	$MS_{10} = 0.233$

Determination of the smallest margin of safety for the bolt, and the failure mode:

$$MSbolt := \min(MS)$$

$MSbolt = 0.008$ Failure_Mode = "Total Tension Yield"

Fail-safe Analysis

Read in the external datum from NASPOST results:

loadfs := READPRN("11fst-fail-pv.txt")

$pf := 1..rows(loadfs)$ $rows(loadfs) = 660$ $yf := 2..cols(loadfs)$ $cols(loadfs) = 10$

$ID := loadfs^{\langle 1 \rangle}$ $Fx := loadfs^{\langle 3 \rangle} \cdot lbf$ $Fz := loadfs^{\langle 5 \rangle} \cdot lbf$ $My := loadfs^{\langle 7 \rangle} \cdot in \cdot lbf$

$LC := loadfs^{\langle 2 \rangle}$ $Fy := loadfs^{\langle 4 \rangle} \cdot lbf$ $Mx := loadfs^{\langle 6 \rangle} \cdot in \cdot lbf$ $Mz := loadfs^{\langle 8 \rangle} \cdot in \cdot lbf$

* Note that "11fst-fail-pv.txt" is generated from NASPOST result (.LIS file) by just removing all words and comments.

$Ft_{pf} := \left| Fz_{pf} \right|$ $max(Ft) = 1254.7\,lbf$ Tensile Load

$Fv_{pf} := \sqrt{\left(Fy_{pf}\right)^2 + \left(Fx_{pf}\right)^2}$ $max(Fv) = 532.37\,lbf$ Shear Load

Fail-safe Loads

Applied tensile load $P_FS := 1595.26 \cdot lbf$

Applied shear load $V_FS := 499.24 \cdot lbf$

Applied bending moment $M_FS := 0 \cdot in \cdot lbf$

Fail-safe Factors of Safety

Ultimate $SFu_FS := 1.0$

Joint Separation $SFsep_FS := 1.0$

This file uses the calculations shown in \\escfil02\2i11_mathcad\8307_bolts\bolt_stiffness_insert_FS_RevC

Mon Feb 14 12:51:39 2005

Bolt Fail-safe Load data

Joint separation load $Psep_FS = 1595.26\,lbf$

Max. load on the bolt(ultimate) $Pb_FS = 4082.4\,lbf$

Summary of fail-safe Margins for bolt:

Joint separation	$MS_FS_1 = -0.2$	Total Thread shear Ultimate	$MS_FS_5 = 0.84$
Direct Tension Ultimate	$MS_FS_2 = 1.95$	Shear Ultimate	$MS_FS_6 = 4.23$
Total Tension Ultimate	$MS_FS_3 = 0.33$	Bending Ultimate	$MS_FS_7 = 10$
Direct Thread shear Ultimate	$MS_FS_4 = 3.09$	Combined shear, tension and bending ultimate	$MS_FS_8 = 0.32$

Determination of the smallest fail-safe margin of safety for the bolt, and the failure mode:

$MSbolt_FS := min(MS_FS)$

$MSbolt_FS = -0.2$ Failure_Mode_FS = "Joint Separation"

Joint separation is acceptable for fail-safe analysis.

CHECK BOLTS (NAS1351N4H16 0.25"-28 x 1.0 L Material-A-286), Nut NAS1291C4, Washer NAS1149E0463R

Analysis : The fasteners connecting the PVGF bracket to the Upper Trunnion Bridge Beam will be analyzed. The tension and shear on the bolts will be calculated. This analysis only includes the 2 fasteners shown in the figure below.

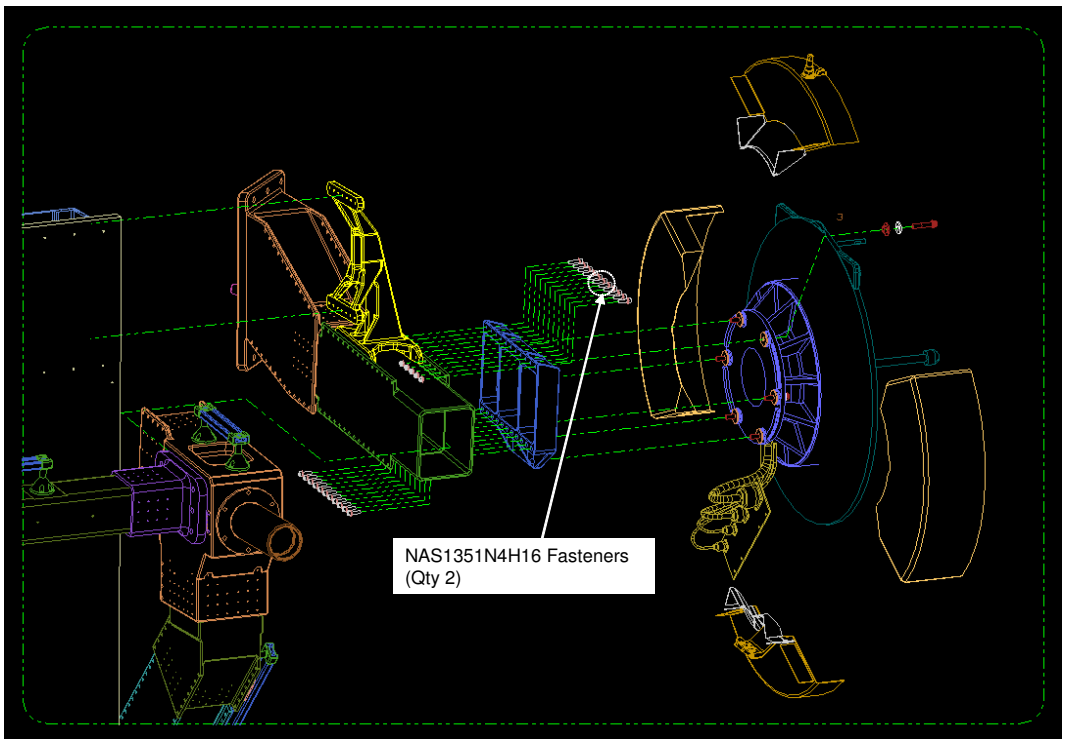

Loads : Bolt forces were sorted by maximum absolute value on all three axes. The tensile load and shear load were calculated for the worse case. All bolt forces reference the Global Coordinate System.

Read in the external datum from NASPOST results:

$loads := READPRN("5fst\text{-}pv.txt")$

$i := 1..rows(loads)$ $\quad rows(loads) = 330$ $\quad j := 2..cols(loads)$ $\quad cols(loads) = 10$

$ID := loads^{\langle 1 \rangle}$ $\quad Fx := loads^{\langle 3 \rangle} \cdot lbf$ $\quad Fz := loads^{\langle 5 \rangle} \cdot lbf$ $\quad My := loads^{\langle 7 \rangle} \cdot in \cdot lbf$

$LC := loads^{\langle 2 \rangle}$ $\quad Fy := loads^{\langle 4 \rangle} \cdot lbf$ $\quad Mx := loads^{\langle 6 \rangle} \cdot in \cdot lbf$ $\quad Mz := loads^{\langle 8 \rangle} \cdot in \cdot lbf$

* Note that "5fst-pv.txt" is generated from NASPOST result (.LIS file) by just removing all words and comments.

$Ft_i := \left|Fz_i\right|$ $\quad max(Ft) = 559.64\,lbf$ $\quad$ Tensile Load

$Fv_i := \sqrt{\left(Fy_i\right)^2 + \left(Fx_i\right)^2}$ $\quad max(Fv) = 525.94\,lbf$ $\quad$ Shear Load

CHECK BOLTS (NAS1351N4H16 0.25"-28 x 1.0 L Material-A-286), Nut NAS1291C4M, Washer NAS1149E0463R

Flange 1: PVGF Bracket
Part number: SDG39135860
Material: Al Alloy 7075-T7351

Flange 2: Upper Trunnion Bridge Beam
Part number: SDG39135728
Material: Al Alloy 7075-T73511 Extrusion

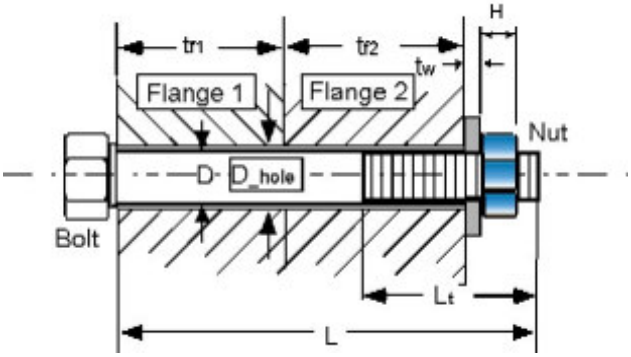

Loads

Applied tensile load $P := 559.64lbf$

Applied shear load $V := 525.94lbf$

Applied bending moment $M := 0in \cdot lbf$

Factors of Safety

Ultimate $SFu := 2.0$ Yield $SFy := 1.25$

Joint Separation $SFsep := 1.2$ Fitting factor $FF := 1.15$

Temperature data

Assembly $Temp_initial := 70 \cdot deg$

Maximum $Temp_max := 225 \cdot deg$

Minimum $Temp_min := -65 \cdot deg$

Bolt and Nut Data

Nominal diameter of bolt $D := .25 \cdot in$

Number of threads/inch $Nt := 28 \cdot \frac{1}{in}$

Total length of bolt $L := 1.0 \cdot in$

Height of nut $H := 0.204 \cdot in$

Threaded length $Lt := 1.0 \cdot in$

(If bolt is fully threaded, input Lt = L)

This file uses the calculations shown in \\escfil02\2i11_mathcad\8307_bolts\thread_data.mcd

Tue Feb 15 10:54:02 AM 2005

Washer Data

Thickness of washers $tw := 0.063 \cdot in$

Outer Diameter of washer $Dw := 0.50in$

Inner Diameter of washer $Dwi := 0.265 \cdot in$

Bolt head dia. across flats $dw := 0.365 \cdot in$ (used only if there is no washer)

Note: If there is no washer tw, Dw and Dwi should be zero

Flange data

Thickness of flange 1 $tf1 := 0.325 \cdot in$

Thickness of flange 2 $tf2 := 0.25in$

Diameter of hole $D_hole := 0.288 \cdot in$

Material Property Data

Bolt

Temperature correction factor for bolt strength ultimate. $TSu_bolt := 0.96$ Yield $TSy_bolt := 0.96$

Bolt ultimate tensile allowable stress $Ftu_bolt := 160000 \cdot psi$

Bolt ultimate shear allowable stress $Fsu_bolt := 0.6 \cdot Ftu_bolt$

Bolt yield Tensile allowable stress $Fty_bolt := 120000 \cdot psi$

Temperature correction factor for bolt modulus $TE_bolt := 0.96$

Modulus of elasticity of bolt $E_bolt := \left(29.1 \cdot 10^{6} \cdot psi\right)$ Thermal coefficient for bolt $\beta_bolt_hot := 9.2 \cdot 10^{-6} \cdot \frac{\frac{in}{in}}{deg}$

Nut

Temperature correction factor for nut strength $TS_nut := 0.96$ $\beta_bolt_cold := 8.55 \cdot 10^{-6} \cdot \frac{\frac{in}{in}}{deg}$

Ultimate tensile allowable stress $Ftu_nut := 160000 \cdot psi$

Ultimate Shear allowable stress: $Fsu_nut := 0.6 \cdot Ftu_nut$

Ultimate axial strength of nut $Ptu_nut := 4580 \cdot lbf$ (Ref. NAS1291)

Washer

Temperature correction factor for washer modulus $TE_washer := 0.96$

Modulus of elasticity of washer: $E_washer := \left(29.1 \cdot 10^{6} \cdot psi\right)$

Flanges

Stiffness of the joint depends upon number of members in the grip of the fasteners, Modulus of elasticity of these members, and diameters of the bolt and the washer.

Temperature correction factor for flange 1 $Tf1E := 0.95$ (modulus)

Temperature correction factor for flange 2 $Tf2E := 0.96$

Modulus of elasticity for the parts in the joint $E_flange1 := \left(10.3 \cdot 10^{6} \cdot psi\right)$ $E_flange2 := \left(10.4 \cdot 10^{6} \cdot psi\right)$

Coefficient of thermal expansion for flanges $\beta_flange1_hot := 12.8 \cdot 10^{-6} \cdot \frac{\frac{in}{in}}{deg}$ $\beta_flange2_hot := 12.8 \cdot 10^{-6} \cdot \frac{\frac{in}{in}}{deg}$

$\beta_flange1_cold := 12.05 \cdot 10^{-6} \cdot \frac{\frac{in}{in}}{deg}$ $\beta_flange2_cold := 12.05 \cdot 10^{-6} \cdot \frac{\frac{in}{in}}{deg}$

Torque/Preload data

Maximum torque (63% of Yield) $Tmax := 103 \cdot in \cdot lbf$

Minimum torque (85% of Max Torque) $Tmin := 88 in \cdot lbf$

Loading plane factor $n := 0.5$

Torque coefficient $k := 0.15$

Preload Uncertainty $u := 0.25$

This file uses the calculations shown in \\escfil02\2i11_mathcad\8307_bolts\bolt_stiffness_nut_RevC

Bolt Load data

Bolt/joint stiffness factor	$= 0.275$	Preload due to temperature	$Pthr_pos = 359.6\,lbf$
Max. preload	$PLDmax = 3792.9\,lbf$		$Pthr_neg = -304.5\,lbf$
Min. preload	$PLDmin = 1283.8\,lbf$	Uncertainty factor	$u = 0.25$
Joint separation load	$Psep = 671.568\,lbf$	Torque coefficient	$k = 0.15$
Max. load on the bolt(ultimate)	$Pb = 3969.6\,lbf$	Loading plane factor	$n = 0.5$
Max. load on the bolt(yield)	$Pby = 3903.4\,lbf$	Thread pullout strength required to develop full strength of bolt	$PAs = 6503.3\,lbf$
Bolt ultimate tensile strength	$PAt = 4396.8\,lbf$	Nut ultimate tensile strength	$Ptu_nut = 4396.8\,lbf$

Length_check = "Bolt length is sufficient"

Summary of Margins for bolt:

Joint separation	$MS_1 = 0.93$	Direct Thread shear Ultimate	$MS_6 = 4.05$
Direct Tension Ultimate	$MS_2 = 2.42$	Total Thread shear Ultimate	$MS_7 = 0.64$
Direct Tension Yield	$MS_3 = 4.05$	Shear Ultimate	$MS_8 = 1.48$
Total Tension Ultimate	$MS_4 = 0.11$	Bending Ultimate	$MS_9 = 10$
Total Tension Yield	$MS_5 = 0.04$	Combined shear, tension and bending ultimate	$MS_{10} = 0.06$

Determination of the smallest margin of safety for the bolt, and the failure mode:

$MSbolt := \min(MS)$

$MSbolt = 0.04$ Failure_Mode = "Total Tension Yield"

Fail-safe Analysis

Read in the external datum from NASPOST results:

$loadfs := READPRN("5fst\text{-}fail\text{-}pv.txt")$

$pf := 1..rows(loadfs)$ $\quad rows(loadfs) = 264$ $\quad yf := 2..cols(loadfs)$ $\quad cols(loadfs) = 10$

$ID := loadfs^{\langle 1 \rangle}$ $\quad Fx := loadfs^{\langle 3 \rangle} \cdot lbf$ $\quad Fz := loadfs^{\langle 5 \rangle} \cdot lbf$ $\quad My := loadfs^{\langle 7 \rangle} \cdot in \cdot lbf$

$LC := loadfs^{\langle 2 \rangle}$ $\quad Fy := loadfs^{\langle 4 \rangle} \cdot lbf$ $\quad Mx := loadfs^{\langle 6 \rangle} \cdot in \cdot lbf$ $\quad Mz := loadfs^{\langle 8 \rangle} \cdot in \cdot lbf$

* Note that "5fst-fail-pv.txt" is generated from NASPOST result (.LIS file) by just removing all words and comments.

$Ft_{pf} := \left| Fz_{pf} \right|$ $\quad max(Ft) = 670.86\,lbf$ $\quad$ Tensile Load

$Fv_{pf} := \sqrt{\left(Fy_{pf}\right)^2 + \left(Fx_{pf}\right)^2}$ $\quad max(Fv) = 578.91\,lbf$ $\quad$ Shear Load

Fail-safe Loads

Applied tensile load $\quad P_FS := 670.5 \cdot lbf$

Applied shear load $\quad V_FS := 578.83 \cdot lbf$

Applied bending moment $\quad M_FS := 0 \cdot in \cdot lbf$

Fail-safe Factors of Safety

Ultimate $\quad SFu_FS := 1.0$

Joint Separation $\quad SFsep_FS := 1.0$

This file uses the calculations shown in \\escfil02\2i11_mathcad\8307_bolts\bolt_stiffness_nut_FS_RevC

Mon Feb 14 12:37:28 2005

Bolt Fail-safe Load data

Joint separation load $\quad Psep_FS = 670.5\,lbf$

Max. load on the bolt(ultimate) $\quad Pb_FS = 3898.8\,lbf$

Summary of fail-safe Margins for bolt:

Joint separation	$MS_FS_1 = 0.93$	Total Thread shear Ultimate	$MS_FS_5 = 0.67$
Direct Tension Ultimate	$MS_FS_2 = 4.7$	Shear Ultimate	$MS_FS_6 = 3.51$
Total Tension Ultimate	$MS_FS_3 = 0.13$	Bending Ultimate	$MS_FS_7 = 10$
Direct Thread shear Ultimate	$MS_FS_4 = 7.43$	Combined shear, tension and bending ultimate	$MS_FS_8 = 0.12$

Determination of the smallest fail-safe margin of safety for the bolt, and the failure mode:

$MSbolt_FS := min(MS_FS)$

$MSbolt_FS = 0.12$ $\quad Failure_Mode_FS = "Combined\ Shear\ Tension\ Bending\ Ultimate"$

Prepared By	Name	Date		File Name
	G. Reyes	11/21/07		6-NAS1351N4H16.mcd
Checked By	C. Bala		**Engineering and Science Contract Group** *Structural Analysis Section*	Drawing No. SDG39135860
Title	**AMS-02 PVGF Bracket - Bolt Analysis**			

CHECK BOLTS (NAS1351N4H16 0.25"-28 x 1.0L Material-A-286), Insert MS21209 F4-15, Material-A-286, Washer NAS1149E0463R

Analysis : The fasteners connecting the PVGF bracket to the Upper Trunnion Bridge Beam will be analyzed. The tension and shear on the bolts will be calculated. These bolts are shared with the radiator bracket. This analysis only includes the 6 fasteners shown in the figure below.

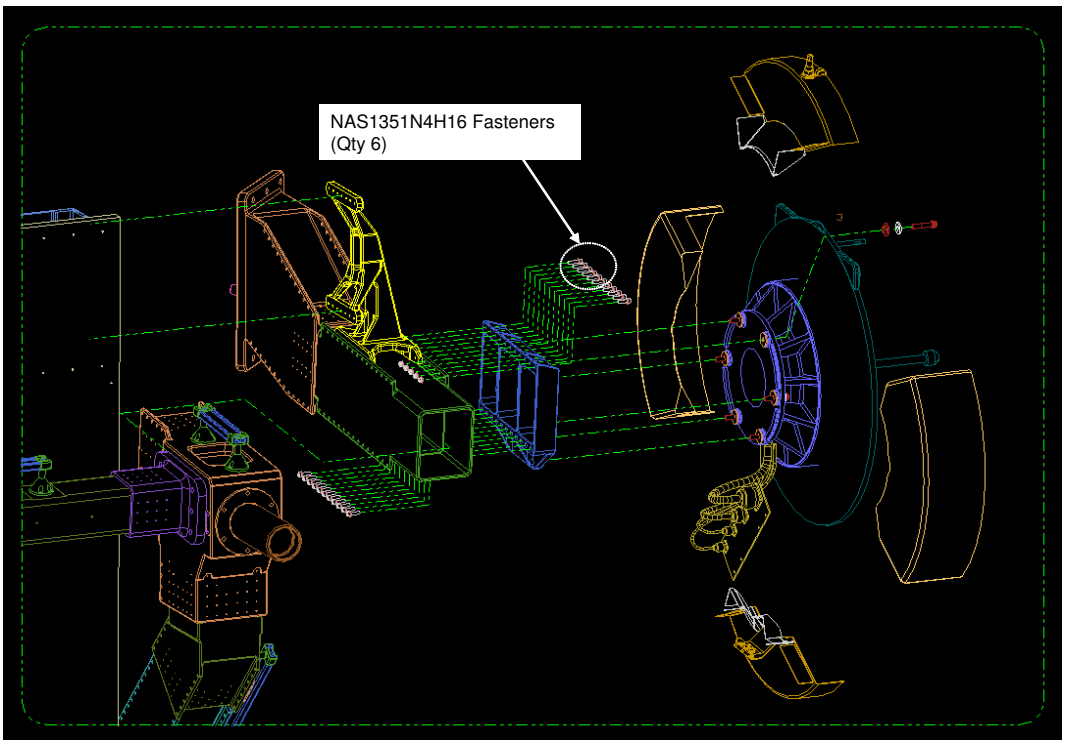

Loads : Bolt forces were sorted by maximum absolute value on all three axes. The tensile load and shear load were calculated for the worse case. All bolt forces reference the Global Coordinate System.

Read in the external datum from NASPOST results:

$loads := READPRN("6fst\text{-}pv.txt")$

$p := 1..rows(loads)$ $\quad rows(loads) = 396$ $\quad y := 2..cols(loads)$ $\quad cols(loads) = 10$

$ID := loads^{\langle 1 \rangle}$ $\quad Fx := loads^{\langle 3 \rangle} \cdot lbf$ $\quad Fz := loads^{\langle 5 \rangle} \cdot lbf$ $\quad My := loads^{\langle 7 \rangle} \cdot in \cdot lbf$

$LC := loads^{\langle 2 \rangle}$ $\quad Fy := loads^{\langle 4 \rangle} \cdot lbf$ $\quad Mx := loads^{\langle 6 \rangle} \cdot in \cdot lbf$ $\quad Mz := loads^{\langle 8 \rangle} \cdot in \cdot lbf$

* Note that "6fst-pv.txt" is generated from NASPOST result (.LIS file) by just removing all words and comments.

$Ft_p := |Fz_p|$ $\quad max(Ft) = 557.76 \cdot lbf$ $\quad$ Tensile Load

$Fv_p := \sqrt{(Fy_p)^2 + (Fx_p)^2}$ $\quad max(Fv) = 534.12 \cdot lbf$ $\quad$ Shear Load

Prepared By	Name	Date	Engineering and Science Contract Group	File Name
	G. Reyes	11/21/07		6-NAS1351N4H16.mcd
Checked By	C. Bala		*Structural Analysis Section*	Draw ing No. SDG39135860
Title	**AMS-02 PVGF Bracket - Bolt Analysis**			

CHECK BOLTS (NAS1351N4H16 0.25"-28 x 1.0L Material-A-286), Insert MS21209 F4-15, Material-A-286, Washer NAS1149E0463R

Flange 1: PVGF Bracket
Part number: SDG39135860
Material: Al Alloy 7075-T7351

Flange 2: Upper Trunnion Bridge Beam
Part number: SDG39135728
Material: Al Alloy 7075-T73511 Extrusion

Flange 3: Radiator Top Bracket
Material: Al Alloy 7075-T7352 Hand Forging

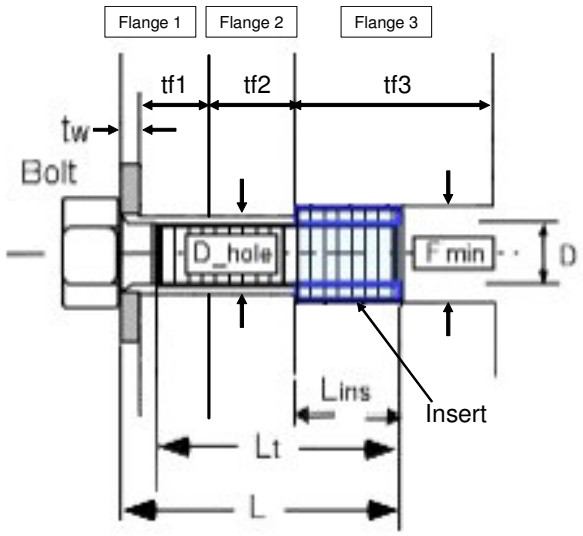

Loads

Applied tensile load $P := 557.76 \cdot lbf$

Applied shear load $V := 534.12 \cdot lbf$

Applied bending moment $M := 0 \cdot in \cdot lbf$

Factors of Safety

Ultimate $SFu := 2.0$ Yield $SFy := 1.25$

Joint Separation $SFsep := 1.2$ Fitting factor $FF := 1.15$

Temperature data

Assembly $Temp_initial := 70 \cdot deg$

Maximum $Temp_max := 225 \cdot deg$

Minimum $Temp_min := -65 \cdot deg$

Bolt and Insert Data

Nominal diameter of bolt $D := 0.25 \cdot in$

Number of threads/inch $Nt := 28 \cdot \frac{1}{in}$

Total length of bolt $L := 1.0 \cdot in$

Length of insert $Lins := 0.375 \cdot in$

Threaded length $Lt := 1.0 \cdot in$

Min. external diameter of insert $Fmin := 0.306 \cdot in$

(If bolt is fully threaded, input Lt = L)

Depth of recess for insert $lr := 0.02 \cdot in$

Reference:\\Escfil02\2i11_mathcad\08307_bolts\thread_data.mcd

Washer Data

Thickness of washer $tw := 0.063 \cdot in$

Outer Diameter of washer $Dw := 0.50in$

Flange data

Thickness of flange 1 $tf1 := 0.325 \cdot in$

Thickness of flange 2 $tf2 := 0.25in$

Thickness of flange 3 $tf3 := 0.375in$ (length of insert)

Inner Diameter of washer $Dwi := 0.265 \cdot in$ Diameter of hole $D_hole := 0.288 \cdot in$

Bolt head dia. across flats $dw := 0.365 \cdot in$

Note: If there is no washer, tw, Dw, and Dwi should be zero.

Material Property Data

Bolt

Temperature correction factor for bolt strength ultimate $TSu_bolt := 0.96$ yield $TSy_bolt := 0.96$

Bolt ultimate tensile allowable stress $Ftu_bolt := 160000 \cdot psi$

Bolt ultimate shear allowable stress $Fsu_bolt := 0.6 \cdot Ftu_bolt$

Bolt yield tensile allowable $Fty_bolt := 120000 \cdot psi$

Temperature correction factor for bolt modulus $TE_bolt := 0.96$

$\beta_bolt_hot := 9.2 \cdot 10^{-6} \cdot \frac{\frac{in}{in}}{deg}$

Modulus of elasticity of bolt $E_bolt := \left(29.1 \cdot 10^{6} \cdot psi\right)$ Thermal coeffecient for bolt:

Insert

$\beta_bolt_cold := 8.55 \cdot 10^{-6} \cdot \frac{\frac{in}{in}}{deg}$

Temperature correction factor for insert strength $TS_ins := 0.96$

Ultimate tensile allowable stress $Ftu_ins := 150000 \cdot psi$ (Ref. MS21209)

Ultimate shear allowable stress $Fsu_ins := 0.6 \cdot Ftu_ins$

Washer

Temperature correction factor for washer modulus $TE_washer := 0.96$

Modulus of elasticity of washer $E_washer := \left(29.1 \cdot 10^{6} \cdot psi\right)$

Flanges

Stiffness of the joint depends upon number of members in the grip of the fasteners,
Modulus of elasticity of these members, and diameters of the bolt and the washer.

Temperature correction factor for flange 1 $Tf1E := 0.95$ (modulus) $Tf2s := 0.96$ (strength)

Temperature correction factor for flange 2 $Tf2E := 0.96$ (modulus) $Fsu_f3 := 35000 \cdot psi$

Temperature correction factor for flange 3 $Tf3E := 0.96$ (modulus) $Tf3s := 0.96$ (strength)

Modulus of elasticity for the parts in the joint $E_flange1 := \left(10.3 \cdot 10^{6} \cdot psi\right)$ $E_flange2 := \left(10.4 \cdot 10^{6} \cdot psi\right)$

$E_flange3 := \left(10.2 \cdot 10^{6} \cdot psi\right)$

Coefficient of thermal expansion for flanges $\beta_flange1_hot := 12.8 \cdot 10^{-6} \cdot \frac{\frac{in}{in}}{deg}$ $\beta_flange2_hot := 12.8 \cdot 10^{-6} \cdot \frac{\frac{in}{in}}{deg}$

$\beta_flange1_cold := 12.05 \cdot 10^{-6} \cdot \frac{\frac{in}{in}}{deg}$ $\beta_flange2_cold := 12.05 \cdot 10^{-6} \cdot \frac{\frac{in}{in}}{deg}$

$\beta_flange3_hot := 12.8 \cdot 10^{-6} \cdot \frac{\frac{in}{in}}{deg}$ $\beta_flange3_cold := 12.05 \cdot 10^{-6} \cdot \frac{\frac{in}{in}}{deg}$

Torque/Preload data

Torque coefficient $k := 0.15$ Preload Percentage: $Per_Preload := 0.63$

Tensile Area: $At := 0.0364 in^{2}$ $Fp_Preload := Per_Preload \cdot At \cdot Fty_bolt$

Maximum torque $Tmax := Fp_Preload \cdot k \cdot D$

Minimum torque $Tmin := 0.85 \cdot Tmax$

Maximum torque $Tmax = 103.2 \cdot in \cdot lbf$ Loading plane factor: $n := 0.5$

Minimum torque $Tmin = 87.7 \cdot in \cdot lbf$ Preload Uncertainty: $u := 0.25$

Reference:\\Escfil02\2M31 STRUCTURAL ANALYSIS\Employees - Current\G_Reyes\FRGF and PVGF brackets\bolt calc templates for shared bolts\CAB_Share

Bolt Load data

Bolt/joint stiffness factor	$= 0.7453$	Preload due to temperature	$Pthr_pos = 158.3452 \cdot lbf$
Max. preload	$PLDmax = 3598.1 \cdot lbf$		$Pthr_neg = -134.1 \cdot lbf$
Min. preload	$PLDmin = 1448.2 \cdot lbf$	Uncertainty factor	$u = 0.25$
Joint separation load	$Psep = 669.312 \cdot lbf$	Torque coefficient	$k = 0.15$
Max. load on the bolt(ultimate)	$Pb = 4076.2 \cdot lbf$	Loading plane factor	$n = 0.5$
Max. load on the bolt(yield)	$Pby = 3896.9 \cdot lbf$	Thread shear pullout load of bolt or insert	$Pths = 10527 \cdot lbf$
Bolt ultimate tensile strength	$PAt = 5419.4 \cdot lbf$	Thread shear pullout load in parent metal	$Ppths = 6056.4 \cdot lbf$

Length_check = "Bolt length is sufficient"

Summary of Margins for bolt:

Joint separation	$MS_1 = 2$	Direct Thread shear Ultimate	$MS_6 = 3.72$
Direct Tension Ultimate	$MS_2 = 3.22$	Total Thread shear Ultimate	$MS_7 = 0.49$
Direct Tension Yield	$MS_3 = 4.07$	Shear Ultimate	$MS_8 = 1.44$
Total Tension Ultimate	$MS_4 = 0.33$	Bending Ultimate	$MS_9 = 10$
Total Tension Yield	$MS_5 = 0.043$	Combined shear, tension and bending ultimate	$MS_{10} = 0.24$

Determination of the smallest margin of safety for the bolt, and the failure mode:

$$MSbolt := \min(MS)$$

$MSbolt = 0.043$ Failure_Mode = "Total Tension Yield"

Fail-safe Analysis

Read in the external datum from NASPOST results:

loadfs := READPRN("6fst-fail-pv.txt")

pf := 1 .. rows(loadfs) rows(loadfs) = 330 yf := 2 .. cols(loadfs) cols(loadfs) = 10

ID := loadfs⟨1⟩ Fx := loadfs⟨3⟩·lbf Fz := loadfs⟨5⟩·lbf My := loadfs⟨7⟩·in·lbf

LC := loadfs⟨2⟩ Fy := loadfs⟨4⟩·lbf Mx := loadfs⟨6⟩·in·lbf Mz := loadfs⟨8⟩·in·lbf

* Note that "6fst-fail-pv.txt" is generated from NASPOST result (.LIS file) by just removing all words and comments.

$Ft_{pf} := \left|Fz_{pf}\right|$ max(Ft) = 663.85·lbf Tensile Load

$Fv_{pf} := \sqrt{\left(Fy_{pf}\right)^2 + \left(Fx_{pf}\right)^2}$ max(Fv) = 579.78·lbf Shear Load

Fail-safe Loads

Applied tensile load P_FS := 685.61·lbf

Applied shear load V_FS := 606.32·lbf

Applied bending moment M_FS := 0·in·lbf

Fail-safe Factors of Safety

Ultimate SFu_FS := 1.0

Joint Separation SFsep_FS := 1.0

Reference:\\Escfil02\2i11_mathcad\08307_bolts\bolt_ stiffness_insert_FS_RevC.mcd

Bolt Fail-safe Load data

Joint separation load Psep_FS = 685.61·lbf

Max. load on the bolt(ultimate) Pb_FS = 3892·lbf

Summary of fail-safe Margins for bolt:

Joint separation	$MS_FS_1 = 1.93$	Total Thread shear Ultimate	$MS_FS_5 = 0.56$
Direct Tension Ultimate	$MS_FS_2 = 5.87$	Shear Ultimate	$MS_FS_6 = 3.3$
Total Tension Ultimate	$MS_FS_3 = 0.39$	Bending Ultimate	$MS_FS_7 = 10$
Direct Thread shear Ultimate	$MS_FS_4 = 6.68$	Combined shear, tension and bending ultimate	$MS_FS_8 = 0.37$

Determination of the smallest fail-safe margin of safety for the bolt, and the failure mode:

MSbolt_FS := min(MS_FS)

MSbolt_FS = 0.37 Failure_Mode_FS = "Combined Shear Tension Bending Ultimate"

Prepared By	Name G. Reyes	Date 11/21/07	Engineering and Science Contract Group *Structural Analysis Section*	File Name 3-NAS1351N4H16.mcd
Checked By	C. Bala			Drawing No. SDG39135860
Title	**AMS-02 PVGF Bracket - Bolt Analysis**			

CHECK BOLTS (NAS1351N4H16 0.25"-28 x 1.0L Material-A-286), Insert MS21209 F4-10, Material-A-286, Washer NAS1149E0463R

Analysis : The fasteners connecting the PVGF bracket to the Upper Trunnion Bridge Beam will be analyzed. The tension and shear on the bolts will be calculated. These bolts are shared with the tracker bracket. This analysis only includes the 3 fasteners shown in the figure below.

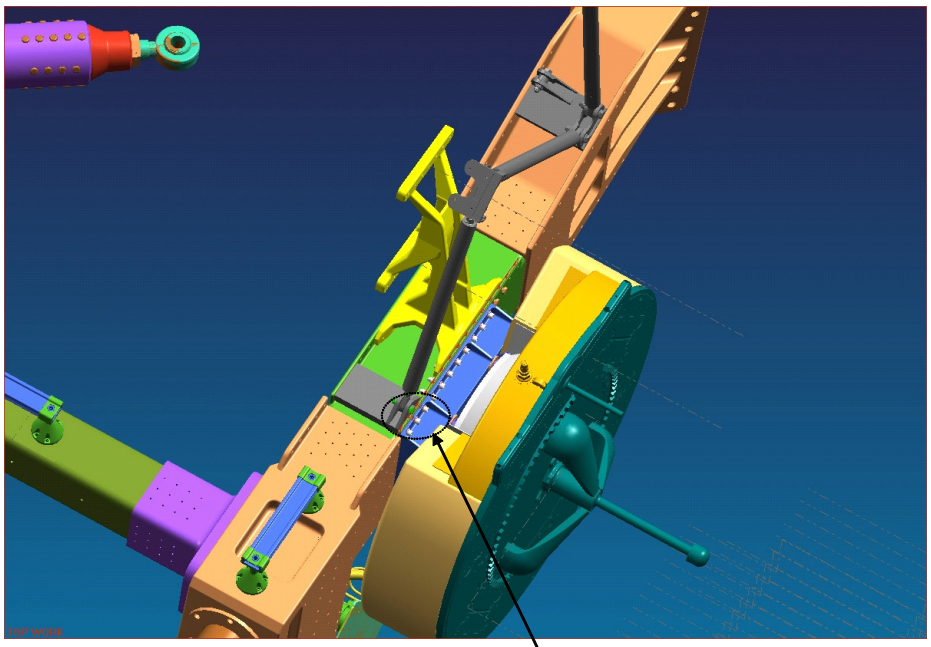

NAS1351N4H16 Fasteners
(Qty 3)

Loads : Bolt forces were sorted by maximum absolute value on all three axes. The tensile load and shear load were calculated for the worse case. All bolt forces reference the Global Coordinate System.

Read in the external datum from NASPOST results:

$loads := READPRN("5fst\text{-}pv.txt")$

$p := 1..rows(loads)$ $\quad rows(loads) = 330$ $\quad y := 2..cols(loads)$ $\quad cols(loads) = 10$

$ID := loads^{\langle 1 \rangle}$ $\quad Fx := loads^{\langle 3 \rangle} \cdot lbf$ $\quad Fz := loads^{\langle 5 \rangle} \cdot lbf$ $\quad My := loads^{\langle 7 \rangle} \cdot in \cdot lbf$

$LC := loads^{\langle 2 \rangle}$ $\quad Fy := loads^{\langle 4 \rangle} \cdot lbf$ $\quad Mx := loads^{\langle 6 \rangle} \cdot in \cdot lbf$ $\quad Mz := loads^{\langle 8 \rangle} \cdot in \cdot lbf$

* Note that "5fst-pv.txt" is generated from NASPOST result (.LIS file) by just removing all words and comments.

$Ft_p := |Fz_p|$ $\quad max(Ft) = 559.64 \cdot lbf$ $\quad$ Tensile Load

$Fv_p := \sqrt{(Fy_p)^2 + (Fx_p)^2}$ $\quad max(Fv) = 525.94 \cdot lbf$ $\quad$ Shear Load

Prepared By	Name	Date	Engineering and Science Contract Group	File Name
	G. Reyes	11/21/07		3-NAS1351N4H16.mcd
Checked By	C. Bala		*Structural Analysis Section*	Draw ing No. SDG39135860
Title	**AMS-02 PVGF Bracket - Bolt Analysis**			

CHECK BOLTS (NAS1351N4H16 0.25"-28 x 1.0L Material-A-286), Insert MS21209 F4-10, Material-A-286, Washer NAS1149E0463R

Flange 1: PVGF Bracket
Part number: SDG39135860
Material: Al Alloy 7075-T7351

Flange 2: Upper Trunnion Bridge Beam
Part number: SDG39135728
Material: Al Alloy 7075-T73511 Extrusion

Flange 3: Tracker Bracket
Material: Al Alloy 7075-T7351

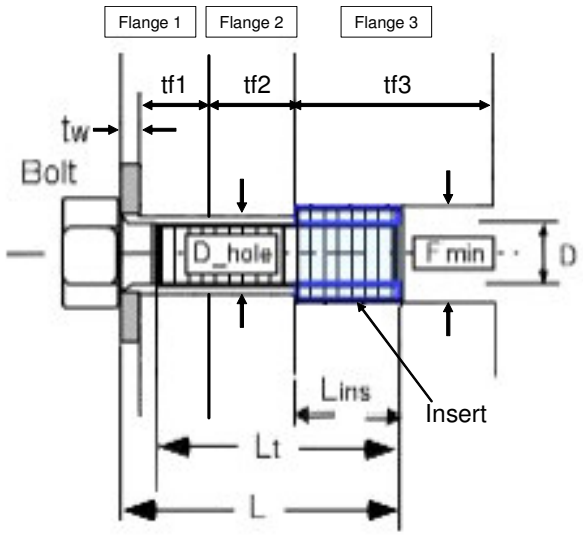

Loads

Applied tensile load $P := 559.64 \cdot lbf$

Applied shear load $V := 525.94 \cdot lbf$

Applied bending moment $M := 0 \cdot in \cdot lbf$

Factors of Safety

Ultimate $SFu := 2.0$ Yield $SFy := 1.25$

Joint Separation $SFsep := 1.2$ Fitting factor $FF := 1.15$

Temperature data

Assembly $Temp_initial := 70 \cdot deg$

Maximum $Temp_max := 225 \cdot deg$

Minimum $Temp_min := -65 \cdot deg$

Bolt and Insert Data

Nominal diameter of bolt $D := 0.25 \cdot in$

Number of threads/inch $Nt := 28 \cdot \frac{1}{in}$

Total length of bolt $L := 1.0 \cdot in$

Length of insert $Lins := 0.25 \cdot in$

Threaded length $Lt := 1.0 \cdot in$

Min. external diameter of insert $Fmin := 0.306 \cdot in$

(If bolt is fully threaded, input Lt = L)

Depth of recess for insert $lr := 0.02 \cdot in$

Reference:\\Escfil02\2i11_mathcad\08307_bolts\thread_data.mcd

Washer Data

Thickness of washer $tw := 0.063 \cdot in$

Outer Diameter of washer $Dw := 0.50in$

Flange data

Thickness of flange 1 $tf1 := 0.325 \cdot in$

Thickness of flange 2 $tf2 := 0.25in$

Thickness of flange 3 $tf3 := 0.25in$ (length of insert)

Inner Diameter of washer $Dwi := 0.265 \cdot in$ Diameter of hole $D_hole := 0.288 \cdot in$

Bolt head dia. across flats $dw := 0.365 \cdot in$

Note: If there is no washer, tw, Dw, and Dwi should be zero.

Material Property Data

Bolt

Temperature correction factor for bolt strength ultimate $TSu_bolt := 0.96$ yield $TSy_bolt := 0.96$

Bolt ultimate tensile allowable stress $Ftu_bolt := 160000 \cdot psi$

Bolt ultimate shear allowable stress $Fsu_bolt := 0.6 \cdot Ftu_bolt$

Bolt yield tensile allowable $Fty_bolt := 120000 \cdot psi$

Temperature correction factor for bolt modulus $TE_bolt := 0.96$

$\beta_bolt_hot := 9.2 \cdot 10^{-6} \cdot \frac{\frac{in}{in}}{deg}$

Modulus of elasticity of bolt $E_bolt := \left(29.1 \cdot 10^{6} \cdot psi\right)$ Thermal coeffecient for bolt:

Insert

$\beta_bolt_cold := 8.55 \cdot 10^{-6} \cdot \frac{\frac{in}{in}}{deg}$

Temperature correction factor for insert strength $TS_ins := 0.96$

Ultimate tensile allowable stress $Ftu_ins := 150000 \cdot psi$ (Ref. MS21209)

Ultimate shear allowable stress $Fsu_ins := 0.6 \cdot Ftu_ins$

Washer

Temperature correction factor for washer modulus $TE_washer := 0.96$

Modulus of elasticity of washer $E_washer := \left(29.1 \cdot 10^{6} \cdot psi\right)$

Flanges

Stiffness of the joint depends upon number of members in the grip of the fasteners,
Modulus of elasticity of these members, and diameters of the bolt and the washer.

Temperature correction factor for flange 1 $Tf1E := 0.95$ (modulus) $Tf2s := 0.96$ (strength)

Temperature correction factor for flange 2 $Tf2E := 0.96$ (modulus) $Fsu_f3 := 38000 \cdot psi$

Temperature correction factor for flange 3 $Tf3E := 0.96$ (modulus) $Tf3s := 0.96$ (strength)

Modulus of elasticity for the parts in the joint $E_flange1 := \left(10.3 \cdot 10^{6} \cdot psi\right)$ $E_flange2 := \left(10.4 \cdot 10^{6} \cdot psi\right)$

$E_flange3 := \left(10.3 \cdot 10^{6} \cdot psi\right)$

Coefficient of thermal expansion for flanges $\beta_flange1_hot := 12.8 \cdot 10^{-6} \cdot \frac{\frac{in}{in}}{deg}$ $\beta_flange2_hot := 12.8 \cdot 10^{-6} \cdot \frac{\frac{in}{in}}{deg}$

$\beta_flange1_cold := 12.05 \cdot 10^{-6} \cdot \frac{\frac{in}{in}}{deg}$ $\beta_flange2_cold := 12.05 \cdot 10^{-6} \cdot \frac{\frac{in}{in}}{deg}$

$\beta_flange3_hot := 12.8 \cdot 10^{-6} \cdot \frac{\frac{in}{in}}{deg}$ $\beta_flange3_cold := 12.05 \cdot 10^{-6} \cdot \frac{\frac{in}{in}}{deg}$

Torque/Preload data

Torque coefficient $k := 0.15$ Preload Percentage: $Per_Preload := 0.63$

Tensile Area: $At := 0.0364 in^{2}$ $Fp_Preload := Per_Preload \cdot At \cdot Fty_bolt$

Maximum torque $Tmax := Fp_Preload \cdot k \cdot D$

Minimum torque $Tmin := 0.85 \cdot Tmax$

Maximum torque $Tmax = 103.2 \cdot in \cdot lbf$ Loading plane factor: $n := 0.5$

Minimum torque $Tmin = 87.7 \cdot in \cdot lbf$ Preload Uncertainty: $u := 0.25$

Reference:\\Escfil02\2M31 STRUCTURAL ANALYSIS\Employees - Current\G_Reyes\FRGF and PVGF brackets\bolt calc templates for shared bolts\CAB_Share

Bolt Load data

Bolt/joint stiffness factor	$= 0.7285$	Preload due to temperature	$Pthr_pos = 161.1594 \cdot lbf$
Max. preload	$PLDmax = 3601 \cdot lbf$		$Pthr_neg = -136.5 \cdot lbf$
Min. preload	$PLDmin = 1445.8 \cdot lbf$	Uncertainty factor	$u = 0.25$
Joint separation load	$Psep = 671.568 \cdot lbf$	Torque coefficient	$k = 0.15$
Max. load on the bolt(ultimate)	$Pb = 4069.8 \cdot lbf$	Loading plane factor	$n = 0.5$
Max. load on the bolt(yield)	$Pby = 3894 \cdot lbf$	Thread shear pullout load of bolt or insert	$Pths = 10527 \cdot lbf$
Bolt ultimate tensile strength	$PAt = 5419.4 \cdot lbf$	Thread shear pullout load in parent metal	$Ppths = 4383.7 \cdot lbf$

Length_check = "Bolt length is sufficient"

Summary of Margins for bolt:

Joint separation	$MS_1 = 1.94$	Direct Thread shear Ultimate	$MS_6 = 2.41$
Direct Tension Ultimate	$MS_2 = 3.21$	Total Thread shear Ultimate	$MS_7 = 0.08$
Direct Tension Yield	$MS_3 = 4.05$	Shear Ultimate	$MS_8 = 1.48$
Total Tension Ultimate	$MS_4 = 0.33$	Bending Ultimate	$MS_9 = 10$
Total Tension Yield	$MS_5 = 0.044$	Combined shear, tension and bending ultimate	$MS_{10} = 0.245$

Determination of the smallest margin of safety for the bolt, and the failure mode:

$MSbolt := \min(MS)$

$MSbolt = 0.044$ Failure_Mode = "Total Tension Yield"

Fail-safe Analysis

Read in the external datum from NASPOST results:

loadfs := READPRN("5fst-fail-pv.txt")

pf := 1 .. rows(loadfs) rows(loadfs) = 264 yf := 2 .. cols(loadfs) cols(loadfs) = 10

ID := loadfs⟨1⟩ Fx := loadfs⟨3⟩·lbf Fz := loadfs⟨5⟩·lbf My := loadfs⟨7⟩·in·lbf

LC := loadfs⟨2⟩ Fy := loadfs⟨4⟩·lbf Mx := loadfs⟨6⟩·in·lbf Mz := loadfs⟨8⟩·in·lbf

* Note that "5fst-fail-pv.txt" is generated from NASPOST result (.LIS file) by just removing all words and comments.

$Ft_{pf} := \left|Fz_{pf}\right|$ max(Ft) = 670.86·lbf Tensile Load

$Fv_{pf} := \sqrt{\left(Fy_{pf}\right)^2 + \left(Fx_{pf}\right)^2}$ max(Fv) = 578.91·lbf Shear Load

Fail-safe Loads

Applied tensile load P_FS := 685.61·lbf

Applied shear load V_FS := 606.32·lbf

Applied bending moment M_FS := 0·in·lbf

Fail-safe Factors of Safety

Ultimate SFu_FS := 1.0

Joint Separation SFsep_FS := 1.0

Reference:\\Escfil02\2i11_mathcad\08307_bolts\bolt_ stiffness_insert_FS_RevC.mcd

Bolt Fail-safe Load data

Joint separation load Psep_FS = 685.61·lbf

Max. load on the bolt(ultimate) Pb_FS = 3888.1·lbf

Summary of fail-safe Margins for bolt:

Joint separation	$MS_FS_1 = 1.88$	Total Thread shear Ultimate	$MS_FS_5 = 0.13$
Direct Tension Ultimate	$MS_FS_2 = 5.87$	Shear Ultimate	$MS_FS_6 = 3.3$
Total Tension Ultimate	$MS_FS_3 = 0.39$	Bending Ultimate	$MS_FS_7 = 10$
Direct Thread shear Ultimate	$MS_FS_4 = 4.56$	Combined shear, tension and bending ultimate	$MS_FS_8 = 0.37$

Determination of the smallest fail-safe margin of safety for the bolt, and the failure mode:

MSbolt_FS := min(MS_FS)

MSbolt_FS = 0.13 Failure_Mode_FS = "Total Thread Shear Ultimate"

5.11.4 FRGF to FRGF Bracket

Section 5.11.4

FRGF Bracket to FRGF Bolt Analysis

CHECK BOLTS (EWB0420-6-27 0.375"-24 x 2.3445 L Material-A-286), Nut Plate MS21060L6, Washer 200003-XX CRES 15-5PH (Along with thermal washer)

Analysis : The fasteners connecting the FRGF bracket to the FRGF will be analyzed. The tension and shear on the bolts will be calculated. This analysis only includes the 6 fasteners shown in the figure below.

Bolt Geometry

size thread/in

$$bolt := \begin{pmatrix} 0.375 & 24 \\ 0.375 & 24 \\ 0.375 & 24 \\ 0.375 & 24 \\ 0.375 & 24 \\ 0.375 & 24 \end{pmatrix}$$

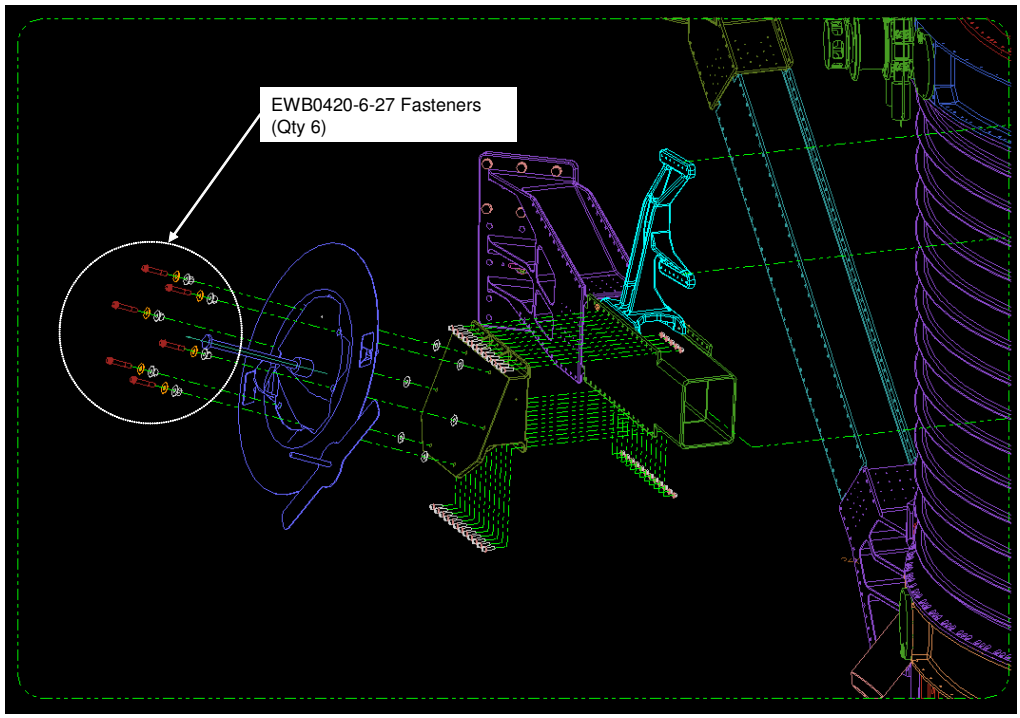

$i := 1 .. rows(bolt)$

$N_i := bolt_{i,2} \cdot \frac{1}{in}$ pitch of bolt

$D_i := bolt_{i,1} \cdot in$ bolt diameter

$At_i := \beta \cdot \left(\frac{D_i - 0.9743 \cdot \frac{1}{N_i}}{2} \right)^2$ Tensile Area of bolt

$As_i := \beta \cdot \left(\frac{D_i - 1.299038 \cdot \frac{1}{N_i}}{2} \right)^2$ Shear Area of bolt

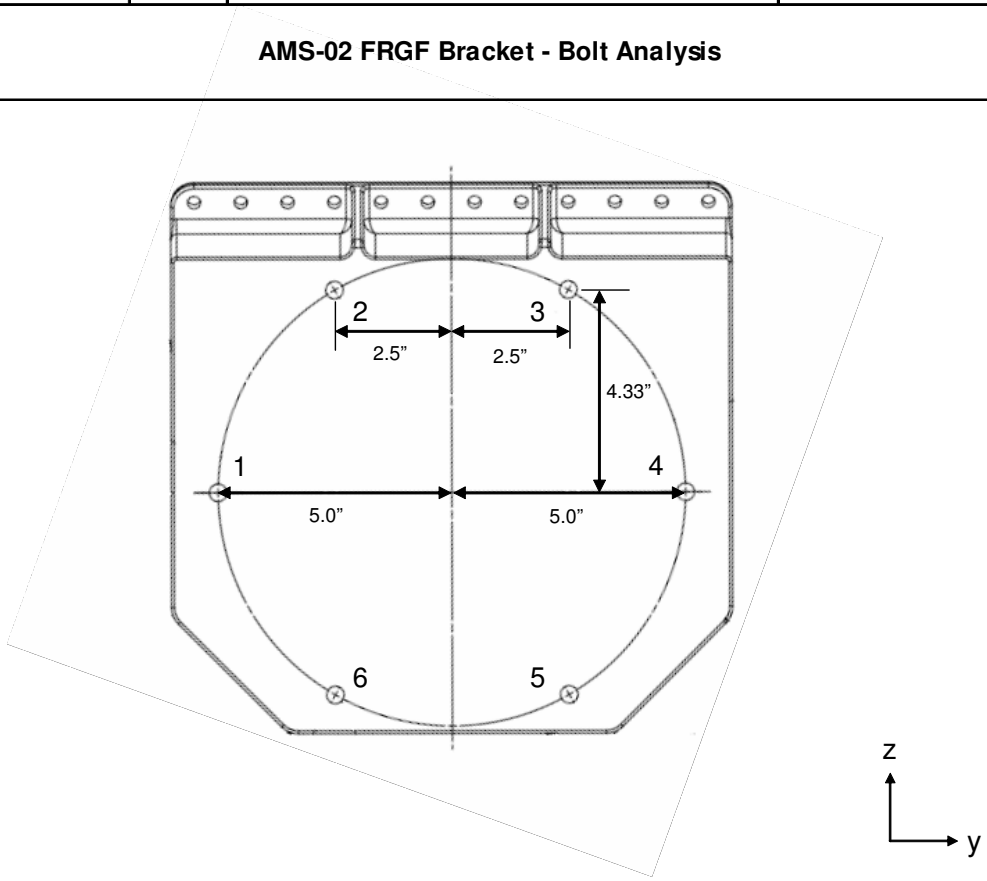

Bolt Pattern

Bolt no.	x co-ord	y co-ord	z co-ord
1	0	−5.0	0
2	0	−2.5	4.33
3	0	2.5	4.33
4	0	5.0	0
5	0	2.5	−4.33
6	0	−2.5	−4.33

$$\begin{pmatrix}1\\2\\3\\4\\5\\6\end{pmatrix} \quad x := \begin{pmatrix}0\\0\\0\\0\\0\\0\end{pmatrix}\cdot in \quad y := \begin{pmatrix}-5.0\\-2.5\\2.5\\5.0\\2.5\\-2.5\end{pmatrix}\cdot in \quad z := \begin{pmatrix}0\\4.33\\4.33\\0\\-4.33\\-4.33\end{pmatrix}\cdot in$$

Location of applied forces and moments

$xforce := 0.0in \qquad yforce := 0.0in \qquad zforce := 0.0in$

$$cgload := \begin{pmatrix}xforce\\yforce\\zforce\end{pmatrix} \qquad cgload = \begin{pmatrix}0\\0\\0\end{pmatrix}$$

Center of gravity of bolt group

$$xcg := \frac{\sum_i x_i}{rows(x)} \qquad xcg = 0\,in \qquad ycg := \frac{\sum_i y_i}{rows(y)} \qquad ycg = 0\,in \qquad zcg := \frac{\sum_i z_i}{rows(z)} \qquad zcg = 0\,in$$

$$cg_{bolt} := \begin{pmatrix} xcg \\ ycg \\ zcg \end{pmatrix} \qquad cg_{bolt} = \begin{pmatrix} 0 \\ 0 \\ 0 \end{pmatrix} in$$

Load Vector

$$r_{load} := cgload - cg_{bolt} \qquad r_{load} = \begin{pmatrix} 0 \\ 0 \\ 0 \end{pmatrix} in$$

Distance from CG of Bolts to Individual Bolts for shear calculations

$$r_i := \sqrt{\left(z_i - zcg\right)^2 + \left(y_i - ycg\right)^2} \qquad r = \begin{pmatrix} 5.000 \\ 5.000 \\ 5.000 \\ 5.000 \\ 5.000 \\ 5.000 \end{pmatrix} in$$

Reading database file

The following file reads in all the loads:

data := READPRN("centerloads.txt")

num_bolts := rows(bolt) $\qquad j := 1 .. rows(data)$

* Note that "centerloads.txt" is generated from NASPOST result (.LIS file) by just removing all words and comments. This file is archived along with the other analysis files.

Loads from loads model

Axial Load $Fx_j := data_{j,3} \cdot lbf$

Shear in Y axis $Fy_j := data_{j,4} \cdot lbf$

Shear in Z axis $Fz_j := data_{j,5} \cdot lbf$

Torsion $Mx_j := data_{j,6} \cdot in \cdot lbf$

Moment about Y axis $My_j := data_{j,8} \cdot in \cdot lbf$

Moment about Z axis $Mz_j := data_{j,7} \cdot in \cdot lbf$

Extrapolation of Moments:

Distance from RBE $dist := 3.8197 \cdot in$

Extrapolation of My Moment: $My_j := My_j + Fz_j \cdot dist$

Extrapolation of Mx Moment: $Mz_j := Mz_j + Fy_j \cdot dist$

Element Identification $ID_j := data_{j,1}$

$ID_j := ID_j \cdot 1000 + 1$ Counter for number of bolts in pattern

Load Case Number $LC_j := data_{j,2}$

Applied Bending Moment at Bolts $M_j := 0 \cdot in \cdot lbf$

Format of Output File

The stack commands below are used to stack the element identifications (ID) and load cases (LC) in asending order per bolt. The element ID number is located in the first column and the LC numbers in the second column.

$ID := stack(ID, ID + 1, ID + 2, ID + 3, ID + 4, ID + 5)$

$LC := stack(LC, LC, LC, LC, LC, LC)$

Moment Distribution

$$M_{tot}^{\langle j \rangle} := \begin{pmatrix} Mx_j \\ My_j \\ Mz_j \end{pmatrix} + r_{load} \times \begin{pmatrix} Fx_j \\ Fy_j \\ Fz_j \end{pmatrix}$$

Use the cross-product to determine the additional moments acting on the fasteners.

$Mx_boltcg_j := M_{tot_{1,j}}$ $\quad$ $My_boltcg_j := M_{tot_{2,j}}$ $\quad$ $Mz_boltcg_j := M_{tot_{3,j}}$

Tension on bolts

$$Ftdirect_{i,j} := \begin{cases} 0 \cdot lbf & \text{if } Fx_j \le 0lbf \\ \dfrac{Fx_j}{num_bolts} & \text{otherwise} \end{cases}$$

Direct tensile load calculation - (The if statement checks for compression)

$$Fmz_{i,j} := \begin{cases} 0 \cdot lbf & \text{if } (y_i - ycg) = 0 \cdot in \\ \dfrac{\left[Mz_boltcg_j \cdot (y_i - ycg)\right] At_i}{\sum_i \left[(y_i - ycg)^2 \cdot At_i\right]} & \end{cases}$$

$$Fmy_{i,j} := \begin{cases} 0 \cdot lbf & \text{if } (z_i - zcg) = 0 \cdot in \\ \dfrac{My_boltcg_j \cdot (z_i - zcg) \cdot At_i}{\sum_i \left[(z_i - zcg)^2 \cdot At_i\right]} & \end{cases}$$

$$Ft_{i,j} := Ftdirect_{i,j} + Fmz_{i,j} + Fmy_{i,j}$$

Total Tensile load

Shear on bolts

Direct shear Loads $\quad$ $$Fsd_{i,j} := \frac{\sqrt{(Fy_j)^2 + (Fz_j)^2}}{num_bolts}$$

Secondary shear on bolts $\quad$ $$Fs_{i,j} := \frac{\left|Mx_boltcg_j\right| \cdot r_i \cdot As_i}{\sum_i \left[(r_i)^2 \cdot (As_i)\right]}$$

Total shear load $\quad$ $$Fstot_{i,j} := Fs_{i,j} + Fsd_{i,j}$$

The stack commands below are used to stack applied axial load (P), applied shear load (V), and applied moment (M) in asending order per bolt. These loads are put into an array with the element/bolt number and load case number from above.

$$P := \text{stack}\left[\left(Ft^T\right)^{\langle 1\rangle}, \left(Ft^T\right)^{\langle 2\rangle}, \left(Ft^T\right)^{\langle 3\rangle}, \left(Ft^T\right)^{\langle 4\rangle}, \left(Ft^T\right)^{\langle 5\rangle}, \left(Ft^T\right)^{\langle 6\rangle}\right]$$

$$V := \text{stack}\left[\left(Fstot^T\right)^{\langle 1\rangle}, \left(Fstot^T\right)^{\langle 2\rangle}, \left(Fstot^T\right)^{\langle 3\rangle}, \left(Fstot^T\right)^{\langle 4\rangle}, \left(Fstot^T\right)^{\langle 5\rangle}, \left(Fstot^T\right)^{\langle 6\rangle}\right]$$

$$M := \text{stack}(M, M, M, M, M, M)$$

The "Output" file outputs an array from left to right starting with the element identification (ID), Load case number (LC), applied load on the bolt (P), applied shear on the bolt (V), and applied moment on the bolt (M). The array is then written to a text file.

$$\text{Output} := \text{augment}\left(ID, LC, \frac{P}{lbf}, \frac{V}{lbf}, \frac{M}{in \cdot lbf}\right)$$

(Note: Since the ID and LC numbers are dimensionless, the P, V, and M values are divided by their units in order to make the array dimensionless.)

Size of the "Output" Array: $\text{rows}(\text{Output}) = 192$

WRITEPRN("centerboltloads.txt") := Output

CHECK BOLTS (EWB0420-6-27 0.375"-24 x 2.3445 L Material-A-286), Nut Plate MS21060L6, Washer 200003-XX CRES 15-5PH (Along with thermal washer)

data := READPRN("centerboltloads.txt")

s := 1 .. rows(data)

Flange 1: FRGF
Part number: Drawing not provided
Material: Titanium (Assume Ti-6Al-4V)

Flange 2: FRGF Bracket
Part number: SDG39135861
Material: Al Alloy 7050-T7451

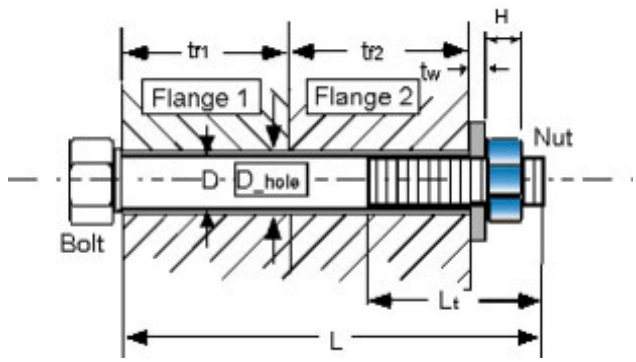

Loads

Applied tensile load $P_s := data_{s,3} \cdot lbf$ $ID_s := data_{s,1}$

Applied shear load $V_s := data_{s,4} \cdot lbf$ $LC_s := data_{s,2}$

Applied bending moment $M_s := data_{s,5} \cdot in \cdot lbf$

Factors of Safety

Ultimate $SFu := 2.0$ Yield $SFy := 1.25$

Joint Separation $SFsep := 1.2$ Fitting factor $FF := 1.15$

Temperature data

Assembly $Temp_initial := 70 \cdot deg$

Maximum $Temp_max := 260 \cdot deg$

Minimum $Temp_min := -75 \cdot deg$

Bolt and Nut Data

Nominal diameter of bolt $D := 0.375 \cdot in$

Number of threads/inch $Nt := 24 \cdot \frac{1}{in}$

Total length of bolt $L := 2.3445 \cdot in$

Height of nut $H := 0.344 \cdot in$

Threaded length $Lt := 0.657 \cdot in$

(If bolt is fully threaded, input Lt = L)

This file uses the calculations shown in \\escfil02\2i11_mathcad\08307_bolts\thread_data.mcd

Washer Data

Thickness of washers $tw := 0.08 \cdot in$

Outer Diameter of washer $Dw := 0.98in$

Inner Diameter of washer $Dwi := 0.377 \cdot in$ (Diameter of hole)

Bolt head dia. across flats $dw := 0.0 \cdot in$ (used only if there is no washer)

Flange data

Thickness of flange 1 $tf1 := 1.357 \cdot in$

Thickness of flange 2 $tf2 := 0.375in$

Diameter of hole $D_hole := 0.377 \cdot in$

Note: If there is no washer tw, Dw and Dwi should be zero

Material Property Data

Bolt

Temperature correction factor for bolt strength ultimate. $TSu_bolt := 0.95$ Yield $TSy_bolt := 0.95$

Bolt ultimate tensile allowable stress $Ftu_bolt := 200000 \cdot psi$

Bolt ultimate shear allowable stress $Fsu_bolt := 0.6 \cdot Ftu_bolt$

Bolt yield Tensile allowable stress $Fty_bolt := 180000 \cdot psi$

Temperature correction factor for bolt modulus $TE_bolt := 0.96$

Modulus of elasticity of bolt $E_bolt := \left(29.1 \cdot 10^{6} \cdot psi\right)$ Thermal coeffecient for bolt $u_bolt_hot := 9.2 \cdot 10^{-6} \cdot \frac{\frac{in}{in}}{deg}$

Nut

Temperature correction factor for nut strength $TS_nut := 0.95$ $u_bolt_cold := 8.55 \cdot 10^{-6} \cdot \frac{\frac{in}{in}}{deg}$

Ultimate tensile allowable stress $Ftu_nut := 125000 \cdot psi$

Ultimate Shear allowable stress: $Fsu_nut := 0.6 \cdot Ftu_nut$

Ultimate axial strength of nut $Ptu_nut := 11450 \cdot lbf$ (Ref. MS21060)

Washer

Temperature correction factor for washer modulus $TE_washer := 1.0$

Modulus of elasticity of washer: $E_washer := \left(28.5 \cdot 10^{6} \cdot psi\right)$

Flanges

Stiffness of the joint depends upon number of members in the grip of the fasteners, Modulus of elasticity of these members, and diameters of the bolt and the washer.

Temperature correction factor for flange 1 $Tf1E := 0.94$ (modulus)

Temperature correction factor for flange 2 $Tf2E := 0.93$

Modulus of elasticity for the parts in the joint $E_flange1 := \left(16.0 \cdot 10^{6} \cdot psi\right)$ $E_flange2 := \left(10.3 \cdot 10^{6} \cdot psi\right)$

Coefficient of thermal expansion for flanges $u_flange1_hot := 5.05 \cdot 10^{-6} \cdot \frac{\frac{in}{in}}{deg}$ $u_flange2_hot := 12.9 \cdot 10^{-6} \cdot \frac{\frac{in}{in}}{deg}$

$u_flange1_cold := 4.7 \cdot 10^{-6} \cdot \frac{\frac{in}{in}}{deg}$ $u_flange2_cold := 12.05 \cdot 10^{-6} \cdot \frac{\frac{in}{in}}{deg}$

Torque/Preload data

Maximum torque (49% of Yield) $Tmax := 435 \cdot in \cdot lbf$

Minimum torque (85% of Max Torque) $Tmin := 370 in \cdot lbf$

Loading plane factor $n := 0.5$

Preload Uncertainty $:= 0.25$

Torque coefficient $k := 0.15$

This file uses the calculations shown in \\escfil02\2i11_mathcad\08307_bolts\multi_bolt_stiffness_nut_RevC

Bolt Load data

Bolt/joint stiffness factor	$= = 0.145$	Preload due to temperature	$Pthr_pos = 809.7\,lbf$
Max. preload	$PLDmax = 10476.3\,lbf$		$Pthr_neg = -1151\,lbf$
Min. preload	$PLDmin = 3299\,lbf$	Uncertainty factor	$= 0.25$
Joint separation load	$max(Psep) = 1636.305\,lbf$	Torque coefficient	$k = 0.15$
Max. load on the bolt(ultimate)	$max(Pb) = 10704.2\,lbf$	Loading plane factor	$n = 0.5$
Max. load on the bolt(yield)	$max(Pby) = 10618.7\,lbf$	Thread pullout strength required to develop full strength of bolt	$PAs = 19591.7\,lbf$
Bolt ultimate tensile strength	$PAt = 10877.5\,lbf$	Nut ultimate tensile strength	$Ptu_nut = 10877.5\,lbf$

Length_check = "Bolt length is sufficient"

Summary of Margins for bolt:

Joint separation	$MS_min_{1,1} = 0.890$	Direct Thread shear Ultimate	$MS_min_{6,1} = 5.247$
Direct Tension Ultimate	$MS_min_{2,1} = 2.468$	Total Thread shear Ultimate	$MS_min_{7,1} = 0.830$
Direct Tension Yield	$MS_min_{3,1} = 6.496$	Shear Ultimate	$MS_min_{8,1} = 10$
Total Tension Ultimate	$MS_min_{4,1} = 0.016$	Bending Ultimate	$MS_min_{9,1} = 10$
Total Tension Yield	$MS_min_{5,1} = 0.384$	Combined shear, tension and bending ultimate	$MS_min_{10,1} = 0.016$

Determination of the smallest margin of safety for the bolt, and the failure mode:

$MSbolt := min(MS)$

$MSbolt = 0.02$

Failure_Mode = "Combined Shear Tension Bending Ultimate"

$MS_min_ID = 10001006$	Element Identification (10001) and Bolt Number (6) for Minimum Margin
$MS_min_LC = 5002$	Load Case Number for Minimum Margin
$MS_min_P = 1363.6$	Applied Tensile Load for Minimum Margin
$MS_min_V = 215.4$	Applied Shear Load for Minimum Margin
$MS_min_M = 0$	Applied Bending Moment for Minimum Margin

Bolt Fail Safe Analysis for FRGF Bracket to FRGF

Since bolt number 6 has the lowest margin of safety, it is assumed that this bolt will be first bolt to fail.
There are now 5, EWB0420 0.375"-24 fasteners, holding the FRGF to the FRGF bracket.

Bolt Geometry

size thread/in

$$bolt2 := \begin{pmatrix} 0.375 & 24 \\ 0.375 & 24 \\ 0.375 & 24 \\ 0.375 & 24 \\ 0.375 & 24 \end{pmatrix}$$

$$s := 1 .. rows(bolt2)$$

$$N2_s := bolt2_{s,2} \cdot \frac{1}{in}$$ pitch of bolt

$$D2_s := bolt2_{s,1} \cdot in$$ bolt diameter

$$At2_s := \beta \cdot \left(\frac{D2_s - 0.9743 \cdot \frac{1}{N2_s}}{2} \right)^2$$ Tensile Area of bolt

$$As2_s := \beta \cdot \left(\frac{D2_s - 1.299038 \cdot \frac{1}{N2_s}}{2} \right)^2$$ Shear Area of bolt

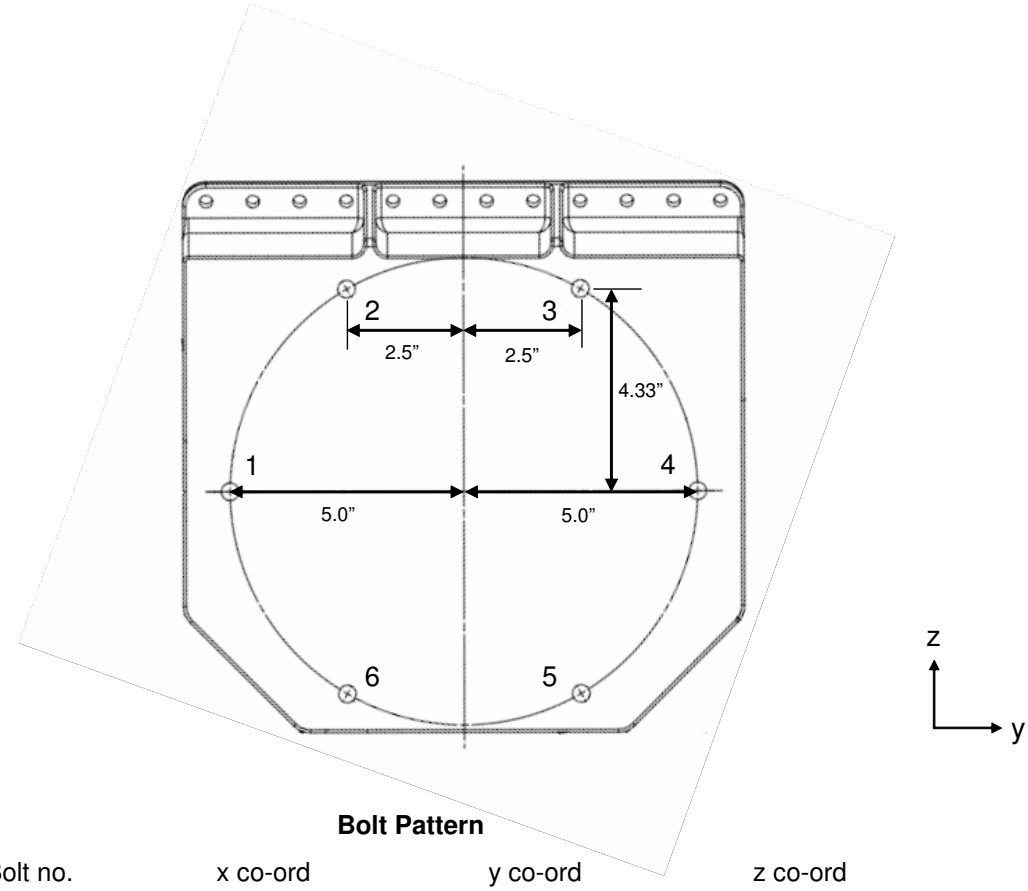

Bolt Pattern

Bolt no.	x co-ord	y co-ord	z co-ord
$\begin{pmatrix}1\\2\\3\\4\\5\end{pmatrix}$	$x2 := \begin{pmatrix}0\\0\\0\\0\\0\end{pmatrix}\cdot in$	$y2 := \begin{pmatrix}-5\\-2.5\\2.5\\5\\2.5\end{pmatrix}\cdot in$	$z2 := \begin{pmatrix}0\\4.33\\4.33\\0\\-4.33\end{pmatrix}\cdot in$

Location of applied forces and moments

$xforce2 := 0.0in$ $\quad$ $yforce2 := 0.0in$ $\quad$ $zforce2 := 0.0in$

$$cgload2 := \begin{pmatrix}xforce2\\yforce2\\zforce2\end{pmatrix} \qquad cgload2 = \begin{pmatrix}0\\0\\0\end{pmatrix}$$

Center of gravity of bolt group

$$xcg2 := \frac{\sum_s x2_s}{rows(x2)} \qquad xcg2 = 0\,in \qquad ycg2 := \frac{\sum_s y2_s}{rows(y2)} \qquad ycg2 = 0.5\,in \qquad zcg2 := \frac{\sum_s z2_s}{rows(z2)} \qquad zcg2 = 0.866\,in$$

$$cg_{bolt2} := \begin{pmatrix} xcg2 \\ ycg2 \\ zcg2 \end{pmatrix} \qquad cg_{bolt2} = \begin{pmatrix} 0 \\ 0.5 \\ 0.866 \end{pmatrix} in$$

Load Vector

$$r_{load2} := cgload2 - cg_{bolt2} \qquad r_{load2} = \begin{pmatrix} 0 \\ -0.5 \\ -0.866 \end{pmatrix} in$$

Distance from CG of Bolts to Individual Bolts for shear calculations

$$r2_s := \sqrt{\left(z2_s - zcg2\right)^2 + \left(y2_s - ycg2\right)^2} \qquad r2_s = \begin{pmatrix} 5.568 \\ 4.582 \\ 4.000 \\ 4.583 \\ 5.568 \end{pmatrix} in$$

Reading database file

The following file reads in all the loads:

data := READPRN("centerloads-fail.txt")

num_bolts2 := rows(bolt2) q := 1 .. rows(data)

* Note that "centerloads-fail.txt" is generated from NASPOST result (.LIS file) by just removing all words and comments. This file is archived along with the other analysis files.

Loads from loads model

Axial Load $Fx2_q := data_{q,3} \cdot lbf$

Shear in Y axis $Fy2_q := data_{q,4} \cdot lbf$

Shear in Z axis $Fz2_q := data_{q,5} \cdot lbf$

Torsion $Mx2_q := data_{q,6} \cdot in \cdot lbf$

Moment about Y axis $My2_q := data_{q,8} \cdot in \cdot lbf$

Moment about Z axis $Mz2_q := data_{q,7} \cdot in \cdot lbf$

Extrapolation of Moments:

Distance from RBE $dist2 := 3.8197 \cdot in$

Extrapolation of My Moment: $My2_q := My2_q + Fz2_q \cdot dist2$

Extrapolation of Mx Moment: $Mz2_q := Mz2_q + Fy2_q \cdot dist$

Element Identification $ID2_q := data_{q,1}$ $ID2_q := ID2_q \cdot 1000 +$ Counter for number of bolts in pattern

Load Case Number $LC2_q := data_{q,2}$

Applied Bending Moment at Bolts $M2_q := 0 \cdot in \cdot lbf$

Format of Output File

The stack commands below are used to stack the element identifications (ID) and load cases (LC) in asending order per bolt. The element ID number is located in the first column and the LC numbers in the second column.

$ID2 := stack(ID2, ID2 + 1, ID2 + 2, ID2 + 3, ID2 + 4)$

$LC2 := stack(LC2, LC2, LC2, LC2, LC2)$

Moment Distribution

$$M_{tot2}^{\langle q \rangle} := \begin{pmatrix} Mx2_q \\ My2_q \\ Mz2_q \end{pmatrix} + r_{load2} \times \begin{pmatrix} Fx2_q \\ Fy2_q \\ Fz2_q \end{pmatrix}$$

Use the cross-product to determine the additional moments acting on the fasteners.

$Mx_boltcg2_q := M_{tot2_{1,q}}$ $\quad$ $My_boltcg2_q := M_{tot2_{2,q}}$ $\quad$ $Mz_boltcg2_q := M_{tot2_{3,q}}$

Tension on bolts

$$Ftdirect2_{s,q} := \begin{cases} 0 \cdot lbf & \text{if } Fx2_q \le 0lbf \\ \dfrac{Fx2_q}{num_bolts2} & \text{otherwise} \end{cases}$$

Direct tensile load calculation - (The if statement checks for compression)

$$Fmz2_{s,q} := \begin{cases} 0 \cdot lbf & \text{if } \left(y2_s - ycg2\right) = 0 \cdot in \\ \dfrac{\left[Mz_boltcg2_q \cdot \left(y2_s - ycg2\right)\right] At2_s}{\sum_s \left[\left(y2_s - ycg2\right)^2 \cdot At2_s\right]} & \end{cases}$$

$$Fmy2_{s,q} := \begin{cases} 0 \cdot lbf & \text{if } \left(z2_s - zcg2\right) = 0 \cdot in \\ \dfrac{My_boltcg2_q \cdot \left(z2_s - zcg2\right) \cdot At2_s}{\sum_s \left[\left(z2_s - zcg2\right)^2 \cdot At2_s\right]} & \end{cases}$$

$Ft2_{s,q} := Ftdirect2_{s,q} + Fmz2_{s,q} + Fmy2_{s,q}$ $\quad$ Total Tensile load

Shear on bolts

Direct shear Loads $\quad$ $$Fsd2_{s,q} := \frac{\sqrt{\left(Fy2_q\right)^2 + \left(Fz2_q\right)^2}}{num_bolts2}$$

Secondary shear on bolts $\quad$ $$Fs2_{s,q} := \frac{Mx_boltcg2_q \cdot r2_s \cdot As2_s}{\sum_s \left[\left(r2_s\right)^2 \cdot \left(As2_s\right)\right]}$$

Total shear load $\quad$ $Fstot2_{s,q} := Fs2_{s,q} + Fsd2_{s,q}$

The stack commands below are used to stack applied axial load (P2), applied shear load (V2), and applied moment (M2) in asending order per bolt. These loads are put into an array with the element/bolt number and load case number from above.

$$P2 := \text{stack}\left[\left(Ft2^T\right)^{\langle 1\rangle}, \left(Ft2^T\right)^{\langle 2\rangle}, \left(Ft2^T\right)^{\langle 3\rangle}, \left(Ft2^T\right)^{\langle 4\rangle}, \left(Ft2^T\right)^{\langle 5\rangle}\right]$$

$$V2 := \text{stack}\left[\left(Fstot2^T\right)^{\langle 1\rangle}, \left(Fstot2^T\right)^{\langle 2\rangle}, \left(Fstot2^T\right)^{\langle 3\rangle}, \left(Fstot2^T\right)^{\langle 4\rangle}, \left(Fstot2^T\right)^{\langle 5\rangle}\right]$$

$$M2 := \text{stack}(M2, M2, M2, M2, M2)$$

The "Output2" file outputs an array from left to right starting with the element identification (ID2), Load case number (LC2), applied load on the bolt (P2), applied shear on the bolt (V2), and applied moment on the bolt (M2). The array is then written to a text file.

$$Output2 := \text{augment}\left(ID2, LC2, \frac{P2}{lbf}, \frac{V2}{lbf}, \frac{M2}{in \cdot lbf}\right)$$

(Note: Since the ID and LC numbers are dimensionless, the P, V, and M values are divided by their units in order to make the array dimensionless.)

Size of the "Output2" Array: $\text{rows}(Output2) = 160$

$$\text{WRITEPRN}(\text{"centerboltloads-fail.txt"}) := Output2$$

Fail-safe Analysis

data_fs := READPRN("centerboltloads-fail.txt")

s := 1 .. rows(data_fs)

Fail-safe Loads

Applied tensile load $P_FS_s := data_fs_{s,3} \cdot lbf$ $ID_FS_s := data_fs_{s,1}$

Applied shear load $V_FS_s := data_fs_{s,4} \cdot lbf$ $LC_FS_s := data_fs_{s,2}$

Applied bending moment $M_FS_s := data_fs_{s,5} \cdot in \cdot lbf$

Fail-safe Factors of Safety

Ultimate $SFu_FS := 1.0$

Joint Separation $SFsep_FS := 1.0$

This file uses the calculations shown in \\escfil02\2i11_mathcad\8307_bolts\ multi_bolt_stiffness_nut_FS_RevC

Bolt Fail-safe Load data

Joint separation load max(Psep_FS) = 1467.016 lbf

Max. load on the bolt(ultimate) max(Pb_FS) = 10598.9 lbf

Summary of fail-safe Margins for bolt:

Joint separation	$MS_minFS_{1,1} = 1.109$	Total Thread shear Ultimate	$MS_minFS_{5,1} = 0.848$
Direct Tension Ultimate	$MS_minFS_{2,1} = 5.448$	Shear Ultimate	$MS_minFS_{6,1} = 10$
Total Tension Ultimate	$MS_minFS_{3,1} = 0.026$	Bending Ultimate	$MS_minFS_{7,1} = 10$
Direct Thread shear Ultimate	$MS_minFS_{4,1} = 10$	Combined shear, tension and bending ultimate	$MS_minFS_{8,1} = 0.0263$

Determination of the smallest fail-safe margin of safety for the bolt, and the failure mode:

MSbolt_FS := min(MS_FS)

MSbolt_FS = 0.026

Failure_Mode_FS = "Combined Shear Tension Bending Ultimate"

MS_min_ID = 10001001 Element Identification (10001) and Bolt Number (1) for Minimum Margin

MS_min_LC = 5002 Load Case Number for Minimum Margin

MS_min_P = 1467 Applied Tensile Load for Minimum Margin

MS_min_V = −210.7 Applied Shear Load for Minimum Margin

MS_min_M = 0 Applied Bending Moment for Minimum Margin

5.11.5 FRGF Bracket to Upper Trunnion Bridge Beam

Intentionally Left Blank

Section 5.11.5

FRGF Bracket to Upper Trunnion Bridge Beam Bolt Analysis

CHECK BOLTS (NAS1351N4H14 0.25"-28 x 0.875L Material-A-286), Nut NAS1291C4, Washer NAS1149E0463R

Analysis : The fasteners connecting the FRGF bracket to the Upper Trunnion Bridge Beam will be analyzed. The tension and shear on the bolts will be calculated. This analysis only includes the 12 fasteners shown in the figure below.

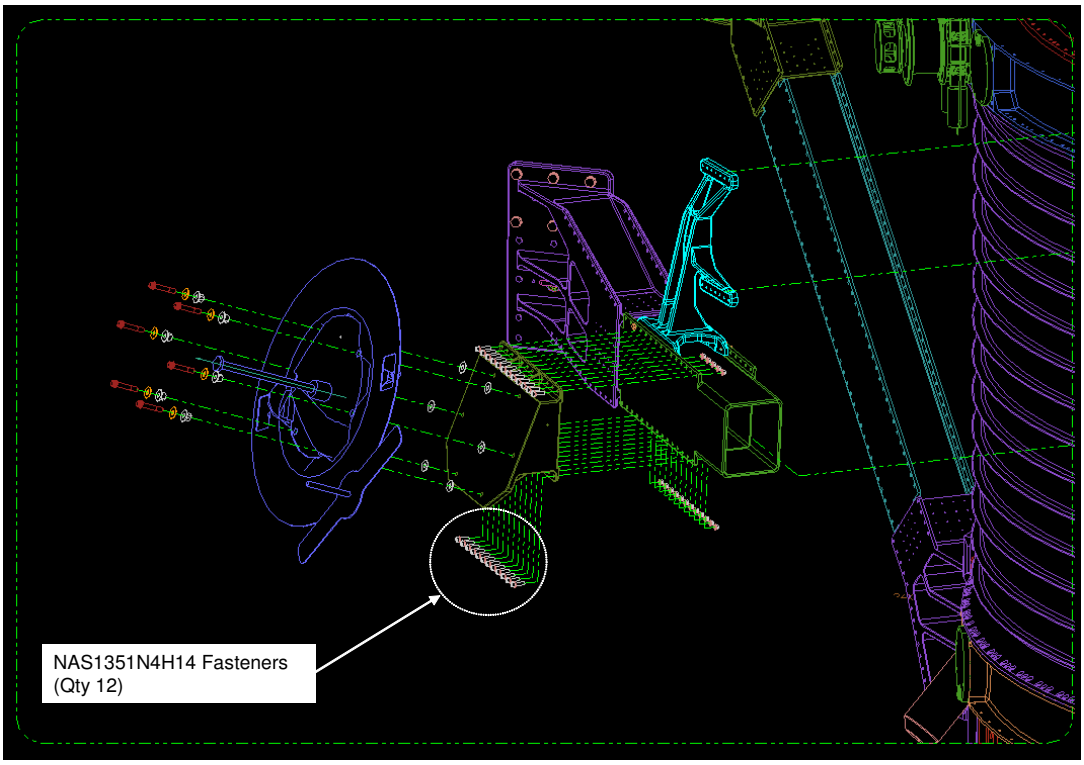

Loads : Bolt forces were sorted by maximum absolute value on all three axes. The tensile load and shear load were calculated for the worse case. All bolt forces reference the Global Coordinate System.

Read in the external datum from NASPOST results:

$loads := READPRN("12fst.txt")$

$i := 1..rows(loads)$ $\quad rows(loads) = 384$ $\quad j := 2..cols(loads)$ $\quad cols(loads) = 10$

$ID := loads^{\langle 1 \rangle}$ $\quad Fx := loads^{\langle 3 \rangle} \cdot lbf$ $\quad Fz := loads^{\langle 5 \rangle} \cdot lbf$ $\quad My := loads^{\langle 7 \rangle} \cdot in \cdot lbf$

$LC := loads^{\langle 2 \rangle}$ $\quad Fy := loads^{\langle 4 \rangle} \cdot lbf$ $\quad Mx := loads^{\langle 6 \rangle} \cdot in \cdot lbf$ $\quad Mz := loads^{\langle 8 \rangle} \cdot in \cdot lbf$

* Note that "12fst.txt" is generated from NASPOST result (.LIS file) by just removing all words and comments.

$Ft_i := \left|Fx_i\right|$ $\quad max(Ft) = 436.26\,lbf$ $\quad$ Tensile Load

$Fv_i := \sqrt{\left(Fy_i\right)^2 + \left(Fz_i\right)^2}$ $\quad max(Fv) = 252.8\,lbf$ $\quad$ Shear Load

CHECK BOLTS (NAS1351N4H14 0.25"-28 x 0.875L Material-A-286), Nut NAS1291C4M, Washer NAS1149E0463R

Flange 1: FRGF Bracket
Part number: SDG39135861
Material: Al Alloy 7050-T7451

Flange 2: Upper Trunnion Bridge Beam
Part number: SDG39135728
Material: Al Alloy 7075-T73511 Extrusion

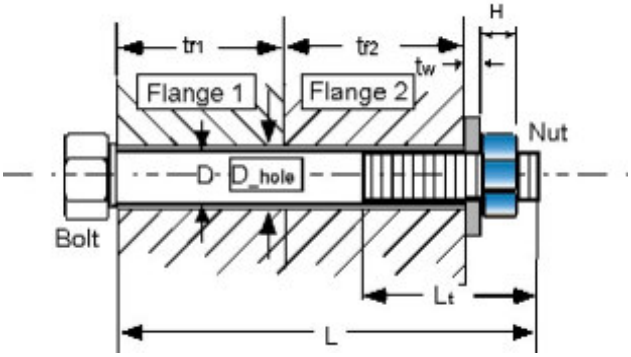

Loads

Applied tensile load $P := 436.26lbf$

Applied shear load $V := 252.8lbf$

Applied bending moment $M := 0in \cdot lbf$

Factors of Safety

Ultimate $SFu := 2.0$ Yield $SFy := 1.25$

Joint Separation $SFsep := 1.2$ Fitting factor $FF := 1.15$

Temperature data

Assembly $Temp_initial := 70 \cdot deg$

Maximum $Temp_max := 260 \cdot deg$

Minimum $Temp_min := -75 \cdot deg$

Bolt and Nut Data

Nominal diameter of bolt $D := .25 \cdot in$

Number of threads/inch $Nt := 28 \cdot \frac{1}{in}$

Total length of bolt $L := 0.875 \cdot in$

Height of nut $H := 0.204 \cdot in$

Threaded length $Lt := 0.875 \cdot in$

(If bolt is fully threaded, input Lt = L)

This file uses the calculations shown in \\escfil02\2i11_mathcad\8307_bolts\thread_data.mcd

Tue Feb 15 10:54:02 AM 2005

Washer Data

Thickness of washers $tw := 0.063 \cdot in$

Outer Diameter of washer $Dw := 0.50in$

Inner Diameter of washer $Dwi := 0.265 \cdot in$

Bolt head dia. across flats $dw := 0.365 \cdot in$ (used only if there is no washer)

Flange data

Thickness of flange 1 $tf1 := 0.25 \cdot in$

Thickness of flange 2 $tf2 := 0.25in$

Diameter of hole $D_hole := 0.288 \cdot in$

Note: If there is no washer tw, Dw and Dwi should be zero

Material Property Data

Bolt

Temperature correction factor for bolt strength ultimate. $TSu_bolt := 0.95$ Yield $TSy_bolt := 0.95$

Bolt ultimate tensile allowable stress $Ftu_bolt := 160000 \cdot psi$

Bolt ultimate shear allowable stress $Fsu_bolt := 0.6 \cdot Ftu_bolt$

Bolt yield Tensile allowable stress $Fty_bolt := 120000 \cdot psi$

Temperature correction factor for bolt modulus $TE_bolt := 0.96$

Modulus of elasticity of bolt $E_bolt := \left(29.1 \cdot 10^{6} \cdot psi\right)$ Thermal coefficient for bolt $\beta_bolt_hot := 9.2 \cdot 10^{-6} \cdot \frac{\frac{in}{in}}{deg}$

Nut

Temperature correction factor for nut strength $TS_nut := 0.95$ $\beta_bolt_cold := 8.55 \cdot 10^{-6} \cdot \frac{\frac{in}{in}}{deg}$

Ultimate tensile allowable stress $Ftu_nut := 160000 \cdot psi$

Ultimate Shear allowable stress: $Fsu_nut := 0.6 \cdot Ftu_nut$

Ultimate axial strength of nut $Ptu_nut := 4580 \cdot lbf$ (Ref. NAS1291)

Washer

Temperature correction factor for washer modulus $TE_washer := 0.96$

Modulus of elasticity of washer: $E_washer := \left(29.1 \cdot 10^{6} \cdot psi\right)$

Flanges

Stiffness of the joint depends upon number of members in the grip of the fasteners, Modulus of elasticity of these members, and diameters of the bolt and the washer.

Temperature correction factor for flange 1 $Tf1E := 0.93$ (modulus)

Temperature correction factor for flange 2 $Tf2E := 0.93$

Modulus of elasticity for the parts in the joint $E_flange1 := \left(10.3 \cdot 10^{6} \cdot psi\right)$ $E_flange2 := \left(10.4 \cdot 10^{6} \cdot psi\right)$

Coefficient of thermal expansion for flanges $\beta_flange1_hot := 12.9 \cdot 10^{-6} \cdot \frac{\frac{in}{in}}{deg}$ $\beta_flange2_hot := 12.9 \cdot 10^{-6} \cdot \frac{\frac{in}{in}}{deg}$

$\beta_flange1_cold := 12.05 \cdot 10^{-6} \cdot \frac{\frac{in}{in}}{deg}$ $\beta_flange2_cold := 12.05 \cdot 10^{-6} \cdot \frac{\frac{in}{in}}{deg}$

Torque/Preload data

Maximum torque (63% of Yield) $Tmax := 103 \cdot in \cdot lbf$

Minimum torque (85% of Max Torque) $Tmin := 88 in \cdot lbf$

Torque coefficient $k := 0.15$

Loading plane factor $n := 0.5$

Preload Uncertainty $u := 0.25$

This file uses the calculations shown in \\escfil02\2i11_mathcad\8307_bolts\bolt_stiffness_nut_RevC

Bolt Load data

Bolt/joint stiffness factor	$= 0.29$	Preload due to temperature	$Pthr_pos = 436.7\,lbf$
Max. preload	$PLDmax = 3870.1\,lbf$		$Pthr_neg = -315.3\,lbf$
Min. preload	$PLDmin = 1273.1\,lbf$	Uncertainty factor	$u = 0.25$
Joint separation load	$Psep = 523.512\,lbf$	Torque coefficient	$k = 0.15$
Max. load on the bolt(ultimate)	$Pb = 4015.7\,lbf$	Loading plane factor	$n = 0.5$
Max. load on the bolt(yield)	$Pby = 3961.1\,lbf$	Thread pullout strength required to develop full strength of bolt	$PAs = 6435.6\,lbf$
Bolt ultimate tensile strength	$PAt = 4351\,lbf$	Nut ultimate tensile strength	$Ptu_nut = 4351\,lbf$

Length_check = "Bolt length is sufficient"

Summary of Margins for bolt:

Joint separation	$MS_1 = 1.47$	Direct Thread shear Ultimate	$MS_6 = 5.41$
Direct Tension Ultimate	$MS_2 = 3.34$	Total Thread shear Ultimate	$MS_7 = 0.6$
Direct Tension Yield	$MS_3 = 5.41$	Shear Ultimate	$MS_8 = 4.11$
Total Tension Ultimate	$MS_4 = 0.08$	Bending Ultimate	$MS_9 = 10$
Total Tension Yield	$MS_5 = 0.02$	Combined shear, tension and bending ultimate	$MS_{10} = 0.08$

Determination of the smallest margin of safety for the bolt, and the failure mode:

$$MSbolt := \min(MS)$$

$MSbolt = 0.02$ Failure_Mode = "Total Tension Yield"

Fail-safe Analysis

Read in the external datum from NASPOST results:

$loadfs := READPRN("12fst\text{-}fail.txt")$

$pf := 1..rows(loadfs)$ $\quad rows(loadfs) = 352$ $\quad yf := 2..cols(loadfs)$ $\quad cols(loadfs) = 10$

$ID := loadfs^{\langle 1 \rangle}$ $\quad Fx := loadfs^{\langle 3 \rangle} \cdot lbf$ $\quad Fz := loadfs^{\langle 5 \rangle} \cdot lbf$ $\quad My := loadfs^{\langle 7 \rangle} \cdot in \cdot lbf$

$LC := loadfs^{\langle 2 \rangle}$ $\quad Fy := loadfs^{\langle 4 \rangle} \cdot lbf$ $\quad Mx := loadfs^{\langle 6 \rangle} \cdot in \cdot lbf$ $\quad Mz := loadfs^{\langle 8 \rangle} \cdot in \cdot lbf$

* Note that "12fst-fail.txt" is generated from NASPOST result (.LIS file) by just removing all words and comments.

$Ft_{pf} := \left| Fx_{pf} \right|$ $\quad max(Ft) = 571.08\,lbf$ $\quad$ Tensile Load

$Fv_{pf} := \sqrt{\left(Fy_{pf}\right)^2 + \left(Fz_{pf}\right)^2}$ $\quad max(Fv) = 362.28\,lbf$ $\quad$ Shear Load

Fail-safe Loads

Applied tensile load $\quad P_FS := 571.08 \cdot lbf$

Applied shear load $\quad V_FS := 362.28 \cdot lbf$

Applied bending moment $\quad M_FS := 0 \cdot in \cdot lbf$

Fail-safe Factors of Safety

Ultimate $\quad SFu_FS := 1.0$

Joint Separation $\quad SFsep_FS := 1.0$

This file uses the calculations shown in \\escfil02\2i11_mathcad\8307_bolts\bolt_stiffness_nut_FS_RevC

Mon Feb 14 12:37:28 2005

Bolt Fail-safe Load data

Joint separation load $\quad Psep_FS = 571.08\,lbf$

Max. load on the bolt(ultimate) $\quad Pb_FS = 3965.4\,lbf$

Summary of fail-safe Margins for bolt:

Joint separation	$MS_FS_1 = 1.27$	Total Thread shear Ultimate	$MS_FS_5 = 0.62$
Direct Tension Ultimate	$MS_FS_2 = 5.63$	Shear Ultimate	$MS_FS_6 = 6.13$
Total Tension Ultimate	$MS_FS_3 = 0.1$	Bending Ultimate	$MS_FS_7 = 10$
Direct Thread shear Ultimate	$MS_FS_4 = 8.8$	Combined shear, tension and bending ultimate	$MS_FS_8 = 0.1$

Determination of the smallest fail-safe margin of safety for the bolt, and the failure mode:

$MSbolt_FS := min(MS_FS)$

$MSbolt_FS = 0.1$ $\quad$ Failure_Mode_FS = "Combined Shear Tension Bending Ultimate"

CHECK BOLTS (NAS1351N4H14 0.25"-28 x 0.875L Material-A-286), Nut NAS1291C4, Washer NAS1149E0463R

Analysis : The fasteners connecting the FRGF bracket to the Upper Trunnion Bridge Beam will be analyzed. The tension and shear on the bolts will be calculated. This analysis only includes the 2 fasteners shown in the figure below.

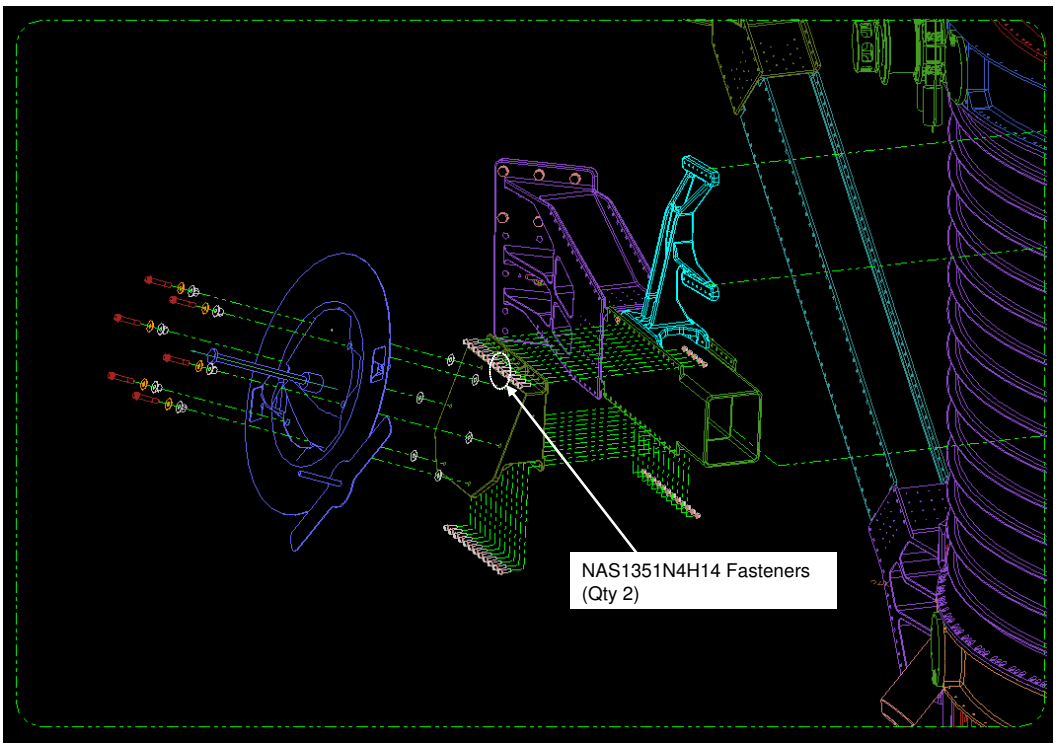

Loads : Bolt forces were sorted by maximum absolute value on all three axes. The tensile load and shear load were calculated for the worse case. All bolt forces reference the Global Coordinate System.

Read in the external datum from NASPOST results:

$loads := READPRN("5fst.txt")$

$i := 1..rows(loads)$ $\quad rows(loads) = 160$ $\quad j := 2..cols(loads)$ $\quad cols(loads) = 10$

$ID := loads^{\langle 1 \rangle}$ $\quad Fx := loads^{\langle 3 \rangle} \cdot lbf$ $\quad Fz := loads^{\langle 5 \rangle} \cdot lbf$ $\quad My := loads^{\langle 7 \rangle} \cdot in \cdot lbf$

$LC := loads^{\langle 2 \rangle}$ $\quad Fy := loads^{\langle 4 \rangle} \cdot lbf$ $\quad Mx := loads^{\langle 6 \rangle} \cdot in \cdot lbf$ $\quad Mz := loads^{\langle 8 \rangle} \cdot in \cdot lbf$

* Note that "5fst.txt" is generated from NASPOST result (.LIS file) by just removing all words and comments.

$Ft_i := \left|Fx_i\right|$ $\quad max(Ft) = 271.65\,lbf$ $\quad$ Tensile Load

$Fv_i := \sqrt{\left(Fy_i\right)^2 + \left(Fz_i\right)^2}$ $\quad max(Fv) = 174.03\,lbf$ $\quad$ Shear Load

CHECK BOLTS (NAS1351N4H14 0.25"-28 x 0.875L Material-A-286), Nut NAS1291C4M, Washer NAS1149E0463R

Flange 1: FRGF Bracket
Part number: SDG39135861
Material: Al Alloy 7050-T7451

Flange 2: Upper Trunnion Bridge Beam
Part number: SDG39135728
Material: Al Alloy 7075-T73511 Extrusion

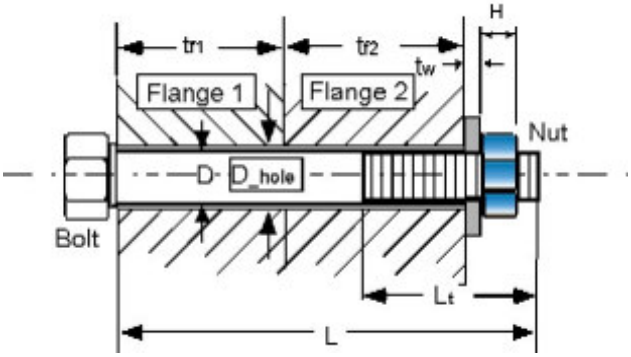

Loads

Applied tensile load $P := 271.65lbf$

Applied shear load $V := 174.03lbf$

Applied bending moment $M := 0in \cdot lbf$

Factors of Safety

Ultimate $SFu := 2.0$ Yield $SFy := 1.25$

Joint Separation $SFsep := 1.2$ Fitting factor $FF := 1.15$

Temperature data

Assembly $Temp_initial := 70 \cdot deg$

Maximum $Temp_max := 260 \cdot deg$

Minimum $Temp_min := -75 \cdot deg$

Bolt and Nut Data

Nominal diameter of bolt $D := .25 \cdot in$

Number of threads/inch $Nt := 28 \cdot \frac{1}{in}$

Total length of bolt $L := 0.875 \cdot in$

Height of nut $H := 0.204 \cdot in$

Threaded length $Lt := 0.875 \cdot in$

(If bolt is fully threaded, input Lt = L)

This file uses the calculations shown in \\escfil02\2i11_mathcad\8307_bolts\thread_data.mcd

Tue Feb 15 10:54:02 AM 2005

Washer Data

Thickness of washers $tw := 0.063 \cdot in$

Outer Diameter of washer $Dw := 0.50in$

Inner Diameter of washer $Dwi := 0.265 \cdot in$

Bolt head dia. across flats $dw := 0.365 \cdot in$ (used only if there is no washer)

Flange data

Thickness of flange 1 $tf1 := 0.25 \cdot in$

Thickness of flange 2 $tf2 := 0.25in$

Diameter of hole $D_hole := 0.288 \cdot in$

Note: If there is no washer tw, Dw and Dwi should be zero

Material Property Data

Bolt

Temperature correction factor for bolt strength ultimate. $TSu_bolt := 0.95$ Yield $TSy_bolt := 0.95$

Bolt ultimate tensile allowable stress $Ftu_bolt := 160000 \cdot psi$

Bolt ultimate shear allowable stress $Fsu_bolt := 0.6 \cdot Ftu_bolt$

Bolt yield Tensile allowable stress $Fty_bolt := 120000 \cdot psi$

Temperature correction factor for bolt modulus $TE_bolt := 0.96$

Modulus of elasticity of bolt $E_bolt := \left(29.1 \cdot 10^{6} \cdot psi\right)$ Thermal coefficient for bolt $\beta_bolt_hot := 9.2 \cdot 10^{-6} \cdot \frac{\frac{in}{in}}{deg}$

Nut

Temperature correction factor for nut strength $TS_nut := 0.95$ $\beta_bolt_cold := 8.55 \cdot 10^{-6} \cdot \frac{\frac{in}{in}}{deg}$

Ultimate tensile allowable stress $Ftu_nut := 160000 \cdot psi$

Ultimate Shear allowable stress: $Fsu_nut := 0.6 \cdot Ftu_nut$

Ultimate axial strength of nut $Ptu_nut := 4580 \cdot lbf$ (Ref. NAS1291)

Washer

Temperature correction factor for washer modulus $TE_washer := 0.96$

Modulus of elasticity of washer: $E_washer := \left(29.1 \cdot 10^{6} \cdot psi\right)$

Flanges

Stiffness of the joint depends upon number of members in the grip of the fasteners, Modulus of elasticity of these members, and diameters of the bolt and the washer.

Temperature correction factor for flange 1 $Tf1E := 0.93$ (modulus)

Temperature correction factor for flange 2 $Tf2E := 0.93$

Modulus of elasticity for the parts in the joint $E_flange1 := \left(10.3 \cdot 10^{6} \cdot psi\right)$ $E_flange2 := \left(10.4 \cdot 10^{6} \cdot psi\right)$

Coefficient of thermal expansion for flanges $\beta_flange1_hot := 12.9 \cdot 10^{-6} \cdot \frac{\frac{in}{in}}{deg}$ $\beta_flange2_hot := 12.9 \cdot 10^{-6} \cdot \frac{\frac{in}{in}}{deg}$

$\beta_flange1_cold := 12.05 \cdot 10^{-6} \cdot \frac{\frac{in}{in}}{deg}$ $\beta_flange2_cold := 12.05 \cdot 10^{-6} \cdot \frac{\frac{in}{in}}{deg}$

Torque/Preload data

Maximum torque (63% of Yield) $Tmax := 103 \cdot in \cdot lbf$

Minimum torque (85% of Max Torque) $Tmin := 88 in \cdot lbf$

Torque coefficient $k := 0.15$

Loading plane factor $n := 0.5$

Preload Uncertainty $u := 0.25$

This file uses the calculations shown in \\escfil02\2i11_mathcad\8307_bolts\bolt_stiffness_nut_RevC

Bolt Load data

Bolt/joint stiffness factor	$= 0.29$	Preload due to temperature	$Pthr_pos = 436.7\,lbf$
Max. preload	$PLDmax = 3870.1\,lbf$		$Pthr_neg = -315.3\,lbf$
Min. preload	$PLDmin = 1273.1\,lbf$	Uncertainty factor	$u = 0.25$
Joint separation load	$Psep = 325.98\,lbf$	Torque coefficient	$k = 0.15$
Max. load on the bolt(ultimate)	$Pb = 3960.8\,lbf$	Loading plane factor	$n = 0.5$
Max. load on the bolt(yield)	$Pby = 3926.7\,lbf$	Thread pullout strength required to develop full strength of bolt	$PAs = 6435.6\,lbf$
Bolt ultimate tensile strength	$PAt = 4351\,lbf$	Nut ultimate tensile strength	$Ptu_nut = 4351\,lbf$

Length_check = "Bolt length is sufficient"

Summary of Margins for bolt:

Joint separation	$MS_1 = 2.97$	Direct Thread shear Ultimate	$MS_6 = 9.3$
Direct Tension Ultimate	$MS_2 = 5.96$	Total Thread shear Ultimate	$MS_7 = 0.62$
Direct Tension Yield	$MS_3 = 9.3$	Shear Ultimate	$MS_8 = 6.42$
Total Tension Ultimate	$MS_4 = 0.1$	Bending Ultimate	$MS_9 = 10$
Total Tension Yield	$MS_5 = 0.02$	Combined shear, tension and bending ultimate	$MS_{10} = 0.1$

Determination of the smallest margin of safety for the bolt, and the failure mode:

$$MSbolt := \min(MS)$$

$MSbolt = 0.02$ Failure_Mode = "Total Tension Yield"

Fail-safe Analysis

Read in the external datum from NASPOST results:

$loadfs := READPRN("5fst\text{-}fail.txt")$

$pf := 1..rows(loadfs)$ $\quad rows(loadfs) = 128$ $\quad yf := 2..cols(loadfs)$ $\quad cols(loadfs) = 10$

$ID := loadfs^{\langle 1 \rangle}$ $\quad Fx := loadfs^{\langle 3 \rangle} \cdot lbf$ $\quad Fz := loadfs^{\langle 5 \rangle} \cdot lbf$ $\quad My := loadfs^{\langle 7 \rangle} \cdot in \cdot lbf$

$LC := loadfs^{\langle 2 \rangle}$ $\quad Fy := loadfs^{\langle 4 \rangle} \cdot lbf$ $\quad Mx := loadfs^{\langle 6 \rangle} \cdot in \cdot lbf$ $\quad Mz := loadfs^{\langle 8 \rangle} \cdot in \cdot lbf$

* Note that "5fst-fail.txt" is generated from NASPOST result (.LIS file) by just removing all words and comments.

$Ft_{pf} := \left| Fx_{pf} \right|$ $\quad max(Ft) = 334.69\,lbf$ $\quad$ Tensile Load

$Fv_{pf} := \sqrt{\left(Fy_{pf}\right)^2 + \left(Fz_{pf}\right)^2}$ $\quad max(Fv) = 222.67\,lbf$ $\quad$ Shear Load

Fail-safe Loads

Applied tensile load $\quad P_FS := 334.69 \cdot lbf$

Applied shear load $\quad V_FS := 222.67 \cdot lbf$

Applied bending moment $\quad M_FS := 0 \cdot in \cdot lbf$

Fail-safe Factors of Safety

Ultimate $\quad SFu_FS := 1.0$

Joint Separation $\quad SFsep_FS := 1.0$

This file uses the calculations shown in \\escfil02\2i11_mathcad\8307_bolts\bolt_stiffness_nut_FS_RevC

Mon Feb 14 12:37:28 2005

Bolt Fail-safe Load data

Joint separation load $\quad Psep_FS = 334.69\,lbf$

Max. load on the bolt(ultimate) $\quad Pb_FS = 3925.9\,lbf$

Summary of fail-safe Margins for bolt:

Joint separation	$MS_FS_1 = 2.87$	Total Thread shear Ultimate	$MS_FS_5 = 0.64$
Direct Tension Ultimate	$MS_FS_2 = 10.3$	Shear Ultimate	$MS_FS_6 = 10.6$
Total Tension Ultimate	$MS_FS_3 = 0.11$	Bending Ultimate	$MS_FS_7 = 10$
Direct Thread shear Ultimate	$MS_FS_4 = 15.72$	Combined shear, tension and bending ultimate	$MS_FS_8 = 0.11$

Determination of the smallest fail-safe margin of safety for the bolt, and the failure mode:

$MSbolt_FS := min(MS_FS)$

$MSbolt_FS = 0.11$ $\quad Failure_Mode_FS = "Combined\ Shear\ Tension\ Bending\ Ultimate"$

Prepared By	Name G. Reyes	Date 09/12/07	Engineering and Science Contract Group *Structural Analysis Section*	File Name 7-NAS1351N4H16.mcd
Checked By	C. Bala			Drawing No. SDG39135861
Title	**AMS-02 FRGF Bracket - Bolt Analysis**			

CHECK BOLTS (NAS1351N4H16 0.25"-28 x 1.0L Material-A-286), Insert MS21209 F4-15, Material-A-286, Washer NAS1149E0463R

Analysis : The fasteners connecting the FRGF bracket to the Upper Trunnion Bridge Beam will be analyzed. The tension and shear on the bolts will be calculated. These bolts are shared with the radiator bracket. This analysis only includes the 7 fasteners shown in the figure below.

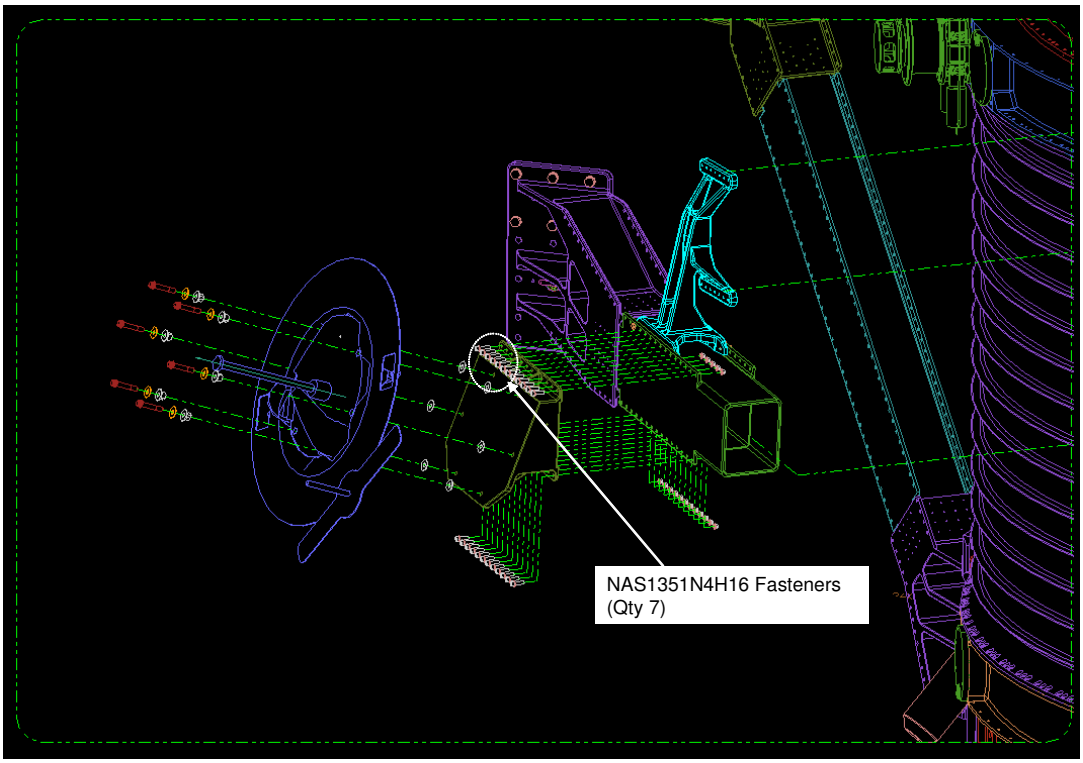

Loads : Bolt forces were sorted by maximum absolute value on all three axes. The tensile load and shear load were calculated for the worse case. All bolt forces reference the Global Coordinate System.

Read in the external datum from NASPOST results:

$loads := READPRN("7fst.txt")$

$p := 1..rows(loads)$ $\quad rows(loads) = 224$ $\quad y := 2..cols(loads)$ $\quad cols(loads) = 10$

$ID := loads^{\langle 1 \rangle}$ $\quad Fx := loads^{\langle 3 \rangle} \cdot lbf$ $\quad Fz := loads^{\langle 5 \rangle} \cdot lbf$ $\quad My := loads^{\langle 7 \rangle} \cdot in \cdot lbf$

$LC := loads^{\langle 2 \rangle}$ $\quad Fy := loads^{\langle 4 \rangle} \cdot lbf$ $\quad Mx := loads^{\langle 6 \rangle} \cdot in \cdot lbf$ $\quad Mz := loads^{\langle 8 \rangle} \cdot in \cdot lbf$

* Note that "7fst.txt" is generated from NASPOST result (.LIS file) by just removing all words and comments.

$Ft_p := |Fx_p|$ $\quad max(Ft) = 216.68\,lbf$ $\quad$ Tensile Load

$Fv_p := \sqrt{(Fy_p)^2 + (Fz_p)^2}$ $\quad max(Fv) = 174.1\,lbf$ $\quad$ Shear Load

Prepared By	Name	Date	Engineering and Science Contract Group	File Name
	G. Reyes	09/12/07		7-NAS1351N4H16.mcd
Checked By	C. Bala		*Structural Analysis Section*	Drawing No. SDG39135861
Title	**AMS-02 FRGF Bracket - Bolt Analysis**			

CHECK BOLTS (NAS1351N4H16 0.25"-28 x 1.0L Material-A-286), Insert MS21209 F4-15, Material-A-286, Washer NAS1149E0463R

Bolt 1

Flange 1: FRGF Bracket
Part number: SDG39135861
Material: Al Alloy 7050-T7451

Flange 2: Upper Trunnion Bridge Beam
Part number: SDG39135728
Material: Al Alloy 7075-T73511 Extrusion

Flange 3: Radiator Top Bracket
Part number:
Material: Al Alloy 7075-T7352 Hand Forging

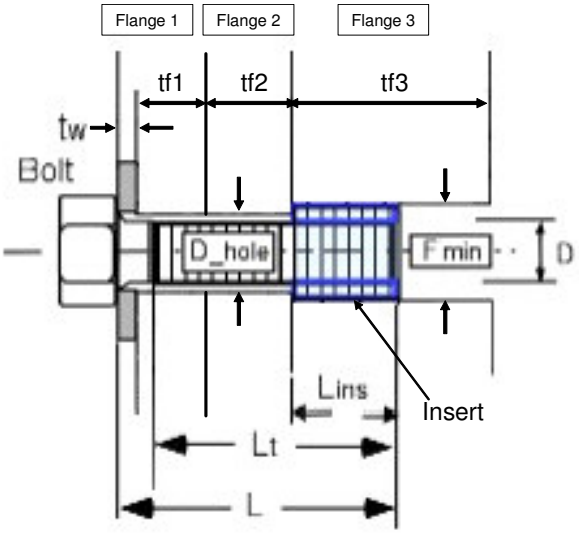

Loads

Applied tensile load $P := 216.68 \cdot lbf$

Applied shear load $V := 174.1 \cdot lbf$

Applied bending moment $M := 0 \cdot in \cdot lbf$

Factors of Safety

Ultimate $SFu := 2.0$ Yield $SFy := 1.25$

Joint Separation $SFsep := 1.2$ Fitting factor $FF := 1.15$

Temperature data

Assembly $Temp_initial := 70 \cdot deg$

Maximum $Temp_max := 260 \cdot deg$

Minimum $Temp_min := -75 \cdot deg$

Bolt and Insert Data

Nominal diameter of bolt $D := 0.25 \cdot in$

Number of threads/inch $Nt := 28 \cdot \frac{1}{in}$

Total length of bolt $L := 1.0 \cdot in$

Length of insert $Lins := 0.375 \cdot in$

Threaded length $Lt := 1.0 \cdot in$

Min. external diameter of insert $Fmin := 0.306 \cdot in$

(If bolt is fully threaded, input Lt = L)

Depth of recess for insert $lr := 0.02 \cdot in$

Reference:\\Escfil02\2i11_mathcad\08307_bolts\thread_data.mcd

Washer Data

Thickness of washer $tw := 0.063 \cdot in$

Outer Diameter of washer $Dw := 0.50in$

Flange data

Thickness of flange 1 $tf1 := 0.25 \cdot in$

Thickness of flange 2 $tf2 := 0.25in$

Thickness of flange 3 $tf3 := 0.375in$ (length of insert)

Inner Diameter of washer $Dwi := 0.265 \cdot in$ Diameter of hole $D_hole := 0.288 \cdot in$

Bolt head dia. across flats $dw := 0.365 \cdot in$

Note: If there is no washer, tw, Dw, and Dwi should be zero.

Material Property Data

Bolt

Temperature correction factor for bolt strength ultimate $TSu_bolt := 0.95$ yield $TSy_bolt := 0.95$

Bolt ultimate tensile allowable stress $Ftu_bolt := 160000 \cdot psi$

Bolt ultimate shear allowable stress $Fsu_bolt := 0.6 \cdot Ftu_bolt$

Bolt yield tensile allowable $Fty_bolt := 120000 \cdot psi$

Temperature correction factor for bolt modulus $TE_bolt := 0.96$

$\beta_bolt_hot := 9.2 \cdot 10^{-6} \cdot \frac{\frac{in}{in}}{deg}$

Modulus of elasticity of bolt $E_bolt := \left(29.1 \cdot 10^{6} \cdot psi\right)$ Thermal coeffecient for bolt:

Insert

$\beta_bolt_cold := 8.55 \cdot 10^{-6} \cdot \frac{\frac{in}{in}}{deg}$

Temperature correction factor for insert strength $TS_ins := 0.95$

Ultimate tensile allowable stress $Ftu_ins := 150000 \cdot psi$ (Ref. MS21209)

Ultimate shear allowable stress $Fsu_ins := 0.6 \cdot Ftu_ins$

Washer

Temperature correction factor for washer modulus $TE_washer := 0.96$

Modulus of elasticity of washer $E_washer := \left(29.1 \cdot 10^{6} \cdot psi\right)$

Flanges

Stiffness of the joint depends upon number of members in the grip of the fasteners,
Modulus of elasticity of these members, and diameters of the bolt and the washer.

Temperature correction factor for flange 1 $Tf1E := 0.93$ (modulus) $Tf2s := 0.93$ (strength)

Temperature correction factor for flange 2 $Tf2E := 0.93$ (modulus) $Fsu_f3 := 35000 \cdot psi$

Temperature correction factor for flange 3 $Tf3E := 0.93$ (modulus) $Tf3s := 0.93$ (strength)

Modulus of elasticity for the parts in the joint $E_flange1 := \left(10.3 \cdot 10^{6} \cdot psi\right)$ $E_flange2 := \left(10.4 \cdot 10^{6} \cdot psi\right)$

$E_flange3 := \left(10.2 \cdot 10^{6} \cdot psi\right)$

Coefficient of thermal expansion for flanges $\beta_flange1_hot := 12.9 \cdot 10^{-6} \cdot \frac{\frac{in}{in}}{deg}$ $\beta_flange2_hot := 12.9 \cdot 10^{-6} \cdot \frac{\frac{in}{in}}{deg}$

$\beta_flange1_cold := 12.05 \cdot 10^{-6} \cdot \frac{\frac{in}{in}}{deg}$ $\beta_flange2_cold := 12.05 \cdot 10^{-6} \cdot \frac{\frac{in}{in}}{deg}$

$\beta_flange3_hot := 12.9 \cdot 10^{-6} \cdot \frac{\frac{in}{in}}{deg}$ $\beta_flange3_cold := 12.05 \cdot 10^{-6} \cdot \frac{\frac{in}{in}}{deg}$

Torque/Preload data

Torque coefficient $k := 0.15$ Preload Percentage: $Per_Preload := 0.63$

Tensile Area: $At := 0.0364 in^{2}$ $Fp_Preload := Per_Preload \cdot At \cdot Fty_bolt$

Maximum torque $Tmax := Fp_Preload \cdot k \cdot D$

Minimum torque $Tmin := 0.85 \cdot Tmax$

Maximum torque $Tmax = 103.2\, in \cdot lbf$ Loading plane factor: $n := 0.5$

Minimum torque $Tmin = 87.7\, in \cdot lbf$ Preload Uncertainty: $u := 0.25$

Reference:\\Escfil02\2M31 STRUCTURAL ANALYSIS\Employees - Current\G_Reyes\FRGF and PVGF brackets\bolt calc templates for shared bolts\CAB_Share

Bolt Load data

Bolt/joint stiffness factor	$= 0.749$	Preload due to temperature	$Pthr_pos = 202.041\ lbf$
Max. preload	$PLDmax = 3641.8\ lbf$		$Pthr_neg = -145.9\ lbf$
Min. preload	$PLDmin = 1436.5\ lbf$	Uncertainty factor	$u = 0.25$
Joint separation load	$Psep = 260.016\ lbf$	Torque coefficient	$k = 0.15$
Max. load on the bolt(ultimate)	$Pb = 3828.5\ lbf$	Loading plane factor	$n = 0.5$
Max. load on the bolt(yield)	$Pby = 3758.5\ lbf$	Thread shear pullout load of bolt or insert	$Pths = 12701.8\ lbf$
Bolt ultimate tensile strength	$PAt = 5363\ lbf$	Thread shear pullout load in parent metal	$Ppths = 5867.1\ lbf$

Length_check = "Bolt length is sufficient"

Summary of Margins for bolt:

Joint separation	$MS_1 = 6.68$	Direct Thread shear Ultimate	$MS_6 = 10.77$
Direct Tension Ultimate	$MS_2 = 9.76$	Total Thread shear Ultimate	$MS_7 = 0.53$
Direct Tension Yield	$MS_3 = 11.91$	Shear Ultimate	$MS_8 = 6.42$
Total Tension Ultimate	$MS_4 = 0.4$	Bending Ultimate	$MS_9 = 10$
Total Tension Yield	$MS_5 = 0.07$	Combined shear, tension and bending ultimate	$MS_{10} = 0.396$

Determination of the smallest margin of safety for the bolt, and the failure mode:

$MSbolt := \min(MS)$

$MSbolt = 0.07$ Failure_Mode = "Total Tension Yield"

Fail-safe Analysis

Read in the external datum from NASPOST results:

$loadfs := READPRN("7fst\text{-}fail.txt")$

$pf := 1..rows(loadfs)$ $\quad rows(loadfs) = 192$ $\quad yf := 2..cols(loadfs)$ $\quad cols(loadfs) = 10$

$ID := loadfs^{\langle 1 \rangle}$ $\quad Fx := loadfs^{\langle 3 \rangle} \cdot lbf$ $\quad Fz := loadfs^{\langle 5 \rangle} \cdot lbf$ $\quad My := loadfs^{\langle 7 \rangle} \cdot in \cdot lbf$

$LC := loadfs^{\langle 2 \rangle}$ $\quad Fy := loadfs^{\langle 4 \rangle} \cdot lbf$ $\quad Mx := loadfs^{\langle 6 \rangle} \cdot in \cdot lbf$ $\quad Mz := loadfs^{\langle 8 \rangle} \cdot in \cdot lbf$

* Note that "7fst-fail.txt" is generated from NASPOST result (.LIS file) by just removing all words and comments.

$Ft_{pf} := |Fx_{pf}|$ $\quad max(Ft) = 315.17\,lbf$ $\quad$ Tensile Load

$Fv_{pf} := \sqrt{(Fy_{pf})^2 + (Fz_{pf})^2}$ $\quad max(Fv) = 194.37\,lbf$ $\quad$ Shear Load

Fail-safe Loads

Applied tensile load $\quad P_FS := 315.17 \cdot lbf$

Applied shear load $\quad V_FS := 194.37 \cdot lbf$

Applied bending moment $\quad M_FS := 0 \cdot in \cdot lbf$

Fail-safe Factors of Safety

Ultimate $\quad SFu_FS := 1.0$

Joint Separation $\quad SFsep_FS := 1.0$

Reference:\\Escfil02\2i11_mathcad\08307_bolts\bolt_ stiffness_insert_FS_RevC.mcd

Bolt Fail-safe Load data

Joint separation load $\quad Psep_FS = 315.17\,lbf$

Max. load on the bolt(ultimate) $\quad Pb_FS = 3777.6\,lbf$

Summary of fail-safe Margins for bolt:

Joint separation	$MS_FS_1 = 5.34$	Total Thread shear Ultimate	$MS_FS_5 = 0.55$
Direct Tension Ultimate	$MS_FS_2 = 13.8$	Shear Ultimate	$MS_FS_6 = 12.28$
Total Tension Ultimate	$MS_FS_3 = 0.42$	Bending Ultimate	$MS_FS_7 = 10$
Direct Thread shear Ultimate	$MS_FS_4 = 15.19$	Combined shear, tension and bending ultimate	$MS_FS_8 = 0.42$

Determination of the smallest fail-safe margin of safety for the bolt, and the failure mode:

$MSbolt_FS := min(MS_FS)$

$MSbolt_FS = 0.42$ $\quad Failure_Mode_FS = "Combined\ Shear\ Tension\ Bending\ Ultimate"$

CHECK BOLTS (NAS1351N4H14 0.25"-28 x 0.875L Material-A-286), Insert MS21209 F4-10, Material-A-286, Washer NAS1149E0463R

Analysis : The fasteners connecting the FRGF bracket to the Upper Trunnion Bridge Beam will be analyzed. The tension and shear on the bolts will be calculated. These bolts are shared with the tracker bracket. This analysis only includes the 3 fasteners shown in the figure below.

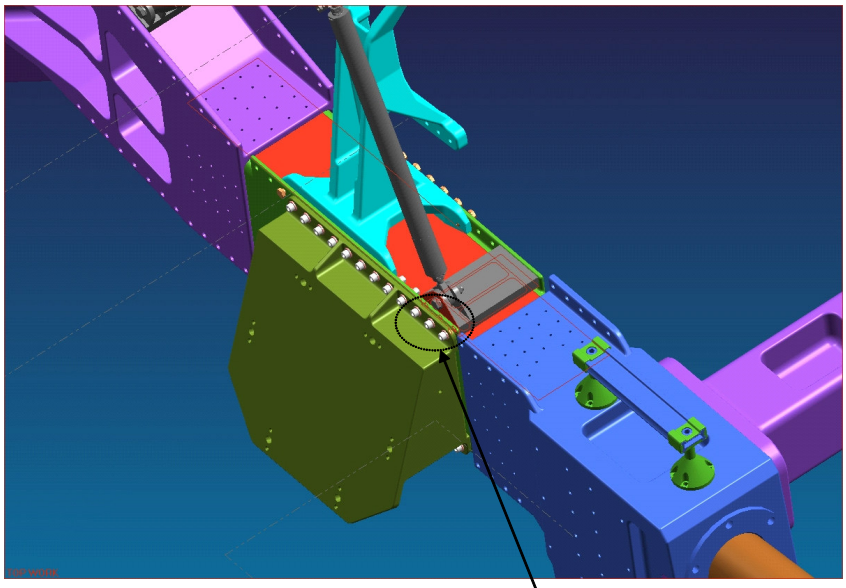

NAS1351N4H14 Fasteners
(Qty 3)

Loads : Bolt forces were sorted by maximum absolute value on all three axes. The tensile load and shear load were calculated for the worse case. All bolt forces reference the Global Coordinate System.

Read in the external datum from NASPOST results:

$loads := READPRN("5fst.txt")$

$p := 1..rows(loads)$ $\quad rows(loads) = 160$ $\quad y := 2..cols(loads)$ $\quad cols(loads) = 10$

$ID := loads^{\langle 1 \rangle}$ $\quad Fx := loads^{\langle 3 \rangle} \cdot lbf$ $\quad Fz := loads^{\langle 5 \rangle} \cdot lbf$ $\quad My := loads^{\langle 7 \rangle} \cdot in \cdot lbf$

$LC := loads^{\langle 2 \rangle}$ $\quad Fy := loads^{\langle 4 \rangle} \cdot lbf$ $\quad Mx := loads^{\langle 6 \rangle} \cdot in \cdot lbf$ $\quad Mz := loads^{\langle 8 \rangle} \cdot in \cdot lbf$

* Note that "5fst.txt" is generated from NASPOST result (.LIS file) by just removing all words and comments.

$Ft_p := |Fx_p|$ $\quad max(Ft) = 271.65 \cdot lbf$ $\quad$ Tensile Load

$Fv_p := \sqrt{(Fy_p)^2 + (Fz_p)^2}$ $\quad max(Fv) = 174.03 \cdot lbf$ $\quad$ Shear Load

Prepared By	Name	Date		File Name
	G. Reyes	09/12/07	Engineering and Science Contract Group	3-NAS1351N4H14.mcd
Checked By	C. Bala		*Structural Analysis Section*	Drawing No. SDG39135861
Title	**AMS-02 FRGF Bracket - Bolt Analysis**			

CHECK BOLTS (NAS1351N4H14 0.25"-28 x 0.875L Material-A-286), Insert MS21209 F4-10, Material-A-286, Washer NAS1149E0463R

Bolt 1

Flange 1: FRGF Bracket
Part number: SDG39135861
Material: Al Alloy 7050-T7451

Flange 2: Upper Trunnion Bridge Beam
Part number: SDG39135728
Material: Al Alloy 7075-T73511 Extrusion

Flange 3: Tracker Bracket
Part number:
Material: Al Alloy 7075-T7351

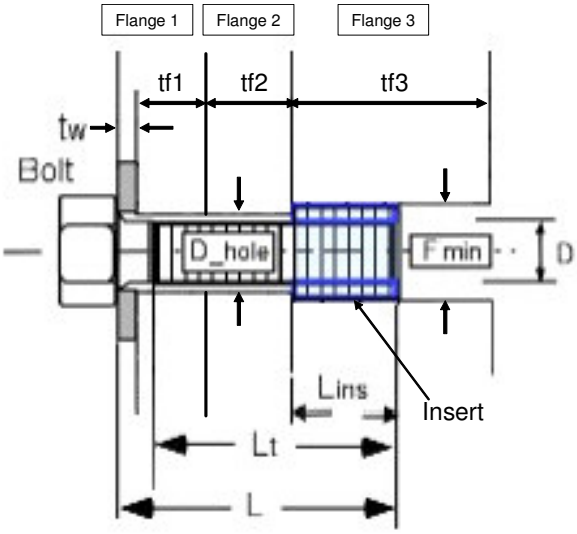

Loads

Applied tensile load $P := 271.65 \cdot lbf$

Applied shear load $V := 174.03 \cdot lbf$

Applied bending moment $M := 0 \cdot in \cdot lbf$

Factors of Safety

Ultimate $SFu := 2.0$ Yield $SFy := 1.25$

Joint Separation $SFsep := 1.2$ Fitting factor $FF := 1.15$

Temperature data

Assembly $Temp_initial := 70 \cdot deg$

Maximum $Temp_max := 260 \cdot deg$

Minimum $Temp_min := -75 \cdot deg$

Bolt and Insert Data

Nominal diameter of bolt $D := 0.25 \cdot in$

Number of threads/inch $Nt := 28 \cdot \frac{1}{in}$

Total length of bolt $L := 0.875 \cdot in$

Length of insert $Lins := 0.25 \cdot in$

Threaded length $Lt := 0.875 \cdot in$

Min. external diameter of insert $Fmin := 0.306 \cdot in$

(If bolt is fully threaded, input Lt = L)

Depth of recess for insert $lr := 0.02 \cdot in$

Reference:\\Escfil02\2i11_mathcad\08307_bolts\thread_data.mcd

Washer Data

Thickness of washer $tw := 0.063 \cdot in$

Outer Diameter of washer $Dw := 0.50in$

Flange data

Thickness of flange 1 $tf1 := 0.25 \cdot in$

Thickness of flange 2 $tf2 := 0.25in$

Thickness of flange 3 $tf3 := 0.25in$ (length of insert)

Inner Diameter of washer $Dwi := 0.265 \cdot in$ Diameter of hole $D_hole := 0.288 \cdot in$

Bolt head dia. across flats $dw := 0.365 \cdot in$

Note: If there is no washer, tw, Dw, and Dwi should be zero.

Material Property Data

Bolt

Temperature correction factor for bolt strength ultimate $TSu_bolt := 0.95$ yield $TSy_bolt := 0.95$

Bolt ultimate tensile allowable stress $Ftu_bolt := 160000 \cdot psi$

Bolt ultimate shear allowable stress $Fsu_bolt := 0.6 \cdot Ftu_bolt$

Bolt yield tensile allowable $Fty_bolt := 120000 \cdot psi$

Temperature correction factor for bolt modulus $TE_bolt := 0.96$

$\beta_bolt_hot := 9.2 \cdot 10^{-6} \cdot \frac{\frac{in}{in}}{deg}$

Modulus of elasticity of bolt $E_bolt := \left(29.1 \cdot 10^{6} \cdot psi\right)$ Thermal coeffecient for bolt:

Insert

$\beta_bolt_cold := 8.55 \cdot 10^{-6} \cdot \frac{\frac{in}{in}}{deg}$

Temperature correction factor for insert strength $TS_ins := 0.95$

Ultimate tensile allowable stress $Ftu_ins := 150000 \cdot psi$ (Ref. MS21209)

Ultimate shear allowable stress $Fsu_ins := 0.6 \cdot Ftu_ins$

Washer

Temperature correction factor for washer modulus $TE_washer := 0.96$

Modulus of elasticity of washer $E_washer := \left(29.1 \cdot 10^{6} \cdot psi\right)$

Flanges

Stiffness of the joint depends upon number of members in the grip of the fasteners,
Modulus of elasticity of these members, and diameters of the bolt and the washer.

Temperature correction factor for flange 1 $Tf1E := 0.93$ (modulus) $Tf2s := 0.93$ (strength)

Temperature correction factor for flange 2 $Tf2E := 0.93$ (modulus) $Fsu_f3 := 38000 \cdot psi$

Temperature correction factor for flange 3 $Tf3E := 0.93$ (modulus) $Tf3s := 0.93$ (strength)

Modulus of elasticity for the parts in the joint $E_flange1 := \left(10.3 \cdot 10^{6} \cdot psi\right)$ $E_flange2 := \left(10.4 \cdot 10^{6} \cdot psi\right)$

$E_flange3 := \left(10.3 \cdot 10^{6} \cdot psi\right)$

Coefficient of thermal expansion for flanges $\beta_flange1_hot := 12.9 \cdot 10^{-6} \cdot \frac{\frac{in}{in}}{deg}$ $\beta_flange2_hot := 12.9 \cdot 10^{-6} \cdot \frac{\frac{in}{in}}{deg}$

$\beta_flange1_cold := 12.05 \cdot 10^{-6} \cdot \frac{\frac{in}{in}}{deg}$ $\beta_flange2_cold := 12.05 \cdot 10^{-6} \cdot \frac{\frac{in}{in}}{deg}$

$\beta_flange3_hot := 12.9 \cdot 10^{-6} \cdot \frac{\frac{in}{in}}{deg}$ $\beta_flange3_cold := 12.05 \cdot 10^{-6} \cdot \frac{\frac{in}{in}}{deg}$

Torque/Preload data

Torque coefficient $k := 0.15$ Preload Percentage: $Per_Preload := 0.63$

Tensile Area: $At := 0.0364 in^{2}$ $Fp_Preload := Per_Preload \cdot At \cdot Fty_bolt$

Maximum torque $Tmax := Fp_Preload \cdot k \cdot D$

Minimum torque $Tmin := 0.85 \cdot Tmax$

Maximum torque $Tmax = 103.2 \cdot in \cdot lbf$ Loading plane factor: $n := 0.5$

Minimum torque $Tmin = 87.7 \cdot in \cdot lbf$ Preload Uncertainty: $u := 0.25$

Reference:\\Escfil02\2M31 STRUCTURAL ANALYSIS\Employees - Current\G_Reyes\FRGF and PVGF brackets\bolt calc templates for shared bolts\CAB_Share

Bolt Load data

Bolt/joint stiffness factor	$= 0.735$	Preload due to temperature	$Pthr_pos = 199.7031 \cdot lbf$
Max. preload	$PLDmax = 3639.5 \cdot lbf$		$Pthr_neg = -144.2 \cdot lbf$
Min. preload	$PLDmin = 1438.1 \cdot lbf$	Uncertainty factor	$u = 0.25$
Joint separation load	$Psep = 325.98 \cdot lbf$	Torque coefficient	$k = 0.15$
Max. load on the bolt(ultimate)	$Pb = 3869.1 \cdot lbf$	Loading plane factor	$n = 0.5$
Max. load on the bolt(yield)	$Pby = 3783 \cdot lbf$	Thread shear pullout load of bolt or insert	$Pths = 8894.3 \cdot lbf$
Bolt ultimate tensile strength	$PAt = 5363 \cdot lbf$	Thread shear pullout load in parent metal	$Ppths = 4246.7 \cdot lbf$

Length_check = "Bolt length is sufficient"

Summary of Margins for bolt:

Joint separation	$MS_1 = 5.07$	Direct Thread shear Ultimate	$MS_6 = 5.8$
Direct Tension Ultimate	$MS_2 = 7.58$	Total Thread shear Ultimate	$MS_7 = 0.1$
Direct Tension Yield	$MS_3 = 9.3$	Shear Ultimate	$MS_8 = 6.42$
Total Tension Ultimate	$MS_4 = 0.39$	Bending Ultimate	$MS_9 = 10$
Total Tension Yield	$MS_5 = 0.063$	Combined shear, tension and bending ultimate	$MS_{10} = 0.382$

Determination of the smallest margin of safety for the bolt, and the failure mode:

$$MSbolt := \min(MS)$$

$MSbolt = 0.063$ Failure_Mode = "Total Tension Yield"

Fail-safe Analysis

Read in the external datum from NASPOST results:

loadfs := READPRN("5fst-fail.txt")

$pf := 1..rows(loadfs)$ $\quad rows(loadfs) = 128$ $\quad yf := 2..cols(loadfs)$ $\quad cols(loadfs) = 10$

$ID := loadfs^{\langle 1 \rangle}$ $\quad Fx := loadfs^{\langle 3 \rangle} \cdot lbf$ $\quad Fz := loadfs^{\langle 5 \rangle} \cdot lbf$ $\quad My := loadfs^{\langle 7 \rangle} \cdot in \cdot lbf$

$LC := loadfs^{\langle 2 \rangle}$ $\quad Fy := loadfs^{\langle 4 \rangle} \cdot lbf$ $\quad Mx := loadfs^{\langle 6 \rangle} \cdot in \cdot lbf$ $\quad Mz := loadfs^{\langle 8 \rangle} \cdot in \cdot lbf$

* Note that "7fst-fail.txt" is generated from NASPOST result (.LIS file) by just removing all words and comments.

$Ft_{pf} := \left| Fx_{pf} \right|$ $\quad max(Ft) = 334.69 \cdot lbf$ $\quad$ Tensile Load

$Fv_{pf} := \sqrt{\left(Fy_{pf}\right)^2 + \left(Fz_{pf}\right)^2}$ $\quad max(Fv) = 222.67 \cdot lbf$ $\quad$ Shear Load

Fail-safe Loads

Applied tensile load $\quad P_FS := 334.69 \cdot lbf$

Applied shear load $\quad V_FS := 222.67 \cdot lbf$

Applied bending moment $\quad M_FS := 0 \cdot in \cdot lbf$

Fail-safe Factors of Safety

Ultimate $\quad SFu_FS := 1.0$

Joint Separation $\quad SFsep_FS := 1.0$

Reference:\\Escfil02\2i11_mathcad\08307_bolts\bolt_ stiffness_insert_FS_RevC.mcd

Bolt Fail-safe Load data

Joint separation load $\quad Psep_FS = 334.69 \cdot lbf$

Max. load on the bolt(ultimate) $\quad Pb_FS = 3781 \cdot lbf$

Summary of fail-safe Margins for bolt:

Joint separation	$MS_FS_1 = 4.91$	Total Thread shear Ultimate	$MS_FS_5 = 0.12$
Direct Tension Ultimate	$MS_FS_2 = 12.93$	Shear Ultimate	$MS_FS_6 = 10.6$
Total Tension Ultimate	$MS_FS_3 = 0.42$	Bending Ultimate	$MS_FS_7 = 10$
Direct Thread shear Ultimate	$MS_FS_4 = 10.03$	Combined shear, tension and bending ultimate	$MS_FS_8 = 0.42$

Determination of the smallest fail-safe margin of safety for the bolt, and the failure mode:

$MSbolt_FS := min(MS_FS)$

$MSbolt_FS = 0.12$ $\quad$ Failure_Mode_FS = "Total Thread Shear Ultimate"

5.11.6 ROEU Fastener Analysis

Section 5.11.6 ROEU Fastener Analysis

The ROEU Fastener Analysis is performed in the following report sections.

5.11.6.1	ROEU Arm Flange to Sill Joint
5.11.6.1	ROEU Arm Flange to Sill Joint (Fail-Safe)
5.11.6.2	ROEU Bearing Failure Analysis
5.11.6.3	ROEU PDA Bracket, Pin, and Lug Analysis
5.11.6.4	ROEU Assembly Harness Bracket and Bolt Analysis

5.11.6.1 ROEU Arm Flange to Sill Joint

Section 5.11.6.1 ROEU/USS Interface

Foldable ROEU Assembly to Sill Joint Bolt Analysis - Part no.: SEG39137677

The parts comprising the Foldable ROEU Assembly are the ROEU Clevis Assembly, PDA Mounting Bracket, and Clamp and Harness Brackets. Eight (8) fasteners attach the ROEU Clevis Assembly to the Sill Joint of the USS. These fasteners, NAS1351N4-20 bolts (160 ksi ultimate), 0.2500-28 UNJF are the subject of the following analysis. The drawing number for the ROEU Clevis Assembly is SEG39137676.

thread/in

$$bolt := \begin{pmatrix} 0.2500 & 28 \\ 0.2500 & 28 \\ 0.2500 & 28 \\ 0.2500 & 28 \\ 0.2500 & 28 \\ 0.2500 & 28 \\ 0.2500 & 28 \\ 0.2500 & 28 \end{pmatrix}$$

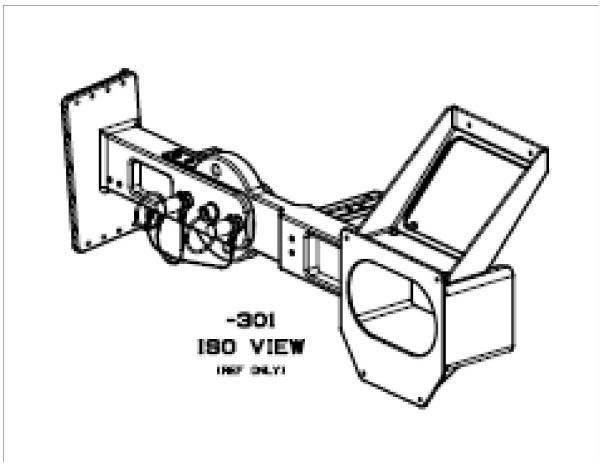

View of ROEU Assembly SDG39137677

$i := 1 .. rows(bolt)$

$N_i := bolt_{i,2} \cdot \frac{1}{in}$ pitch of bolt

$D_i := bolt_{i,1} \cdot in$ bolt diameter

$$At_i := \beta \cdot \left(\frac{D_i - 0.9743 \cdot \frac{1}{N_i}}{2} \right)^2 \qquad As_i := \beta \cdot \left(\frac{D_i - 1.299038 \cdot \frac{1}{N_i}}{2} \right)^2$$

Tensile Area of bolt Shear Area of bolt

Location of the Centroid of the Fastener Group

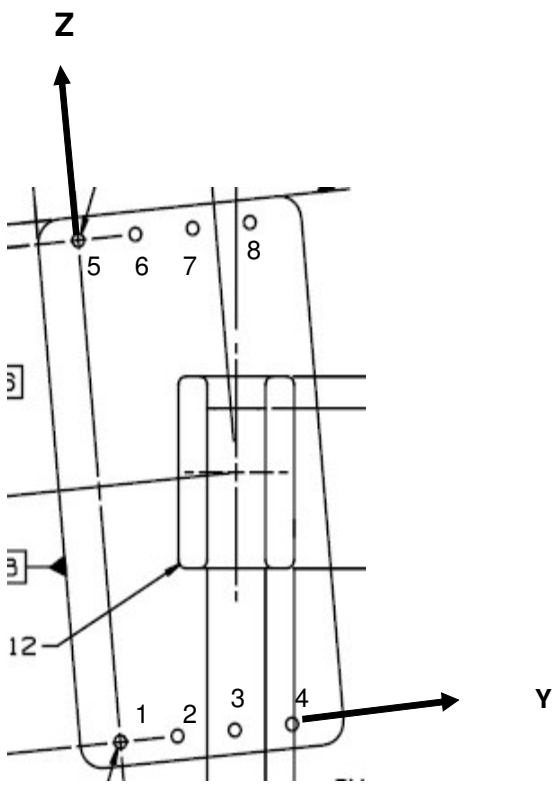

ROEU Clevis Flange Bolt Pattern

Note: The reference y-axis and z-axis locations were conveniently chosen such that the fasteners are contained within the first quadrant of the coordinate system. The x-direction is into the plate and perpendicular to the shear plane. Hole location dimensions were obtained from drawing no. SEG39137676.

Bolt no. x co-ord y co-ord z co-ord

$$\begin{pmatrix}1\\2\\3\\4\\5\\6\\7\\8\end{pmatrix} \quad x := \begin{pmatrix}0.0\\0.0\\0.0\\0.0\\0.0\\0.0\\0.0\\0.0\end{pmatrix}\cdot in \quad y := \begin{pmatrix}0.000\\1.000\\2.000\\3.000\\0.0\\1.000\\2.000\\3.000\end{pmatrix}\cdot in \quad z := \begin{pmatrix}0.000\\0.000\\0.000\\0.000\\7.875\\7.875\\7.875\\7.875\end{pmatrix} in$$

Center of gravity of bolt group

$$xcg := \frac{\sum_i x_i}{rows(x)} \qquad xcg = 0 \cdot in \qquad ycg := \frac{\sum_i y_i}{rows(y)} \qquad ycg = 1.5 \cdot in \qquad zcg := \frac{\sum_i z_i}{rows(z)} \qquad zcg = 3.938 \cdot in$$

$$cg_{bolt} := \begin{pmatrix} xcg \\ ycg \\ zcg \end{pmatrix} \qquad cg_{bolt} = \begin{pmatrix} 0 \\ 1.5 \\ 3.938 \end{pmatrix} \cdot in$$

Distance from CG of Bolts to individual bolts for shear calculations:

$$r_i := \sqrt{\left(z_i - zcg\right)^2 + \left(y_i - ycg\right)^2} \qquad r = \begin{pmatrix} 4.214 \\ 3.969 \\ 3.969 \\ 4.214 \\ 4.214 \\ 3.969 \\ 3.969 \\ 4.214 \end{pmatrix} \cdot in$$

Location of applied forces and moments

The load cases are comprised of launch and abort landing load cases. Loads were obtained from a modified 2-06 loads model. The data recovered are the MPC forces for node 9900, which represents the end of the CBUSH connected to the beam. These loads are at the center of gravity of the bolt pattern. Post processing was performed in NASPOST for forces and moments in the x, y, and z directions. These loads are read into an array and distributed to the 8 bolts of the ROEU clevis flange. The loads information was obtained from the loads group.

Load Vector - xforce, yforce, and zforce represents the components of the position vector measured from the cg of the bolt pattern to the point of application of the forces and moments recovery point of the finite element model.

$$x_{force} := 0.0in \qquad y_{force} := 0.0in \qquad z_{force} := 0.0in$$

$$r_{load} := \begin{pmatrix} x_{force} \\ y_{force} \\ z_{force} \end{pmatrix} \qquad r_{load} = \begin{pmatrix} 0 \\ 0 \\ 0 \end{pmatrix} \cdot in$$

Reading NASPOST file for loads

$data := READPRN("ROEU_uss_interface_naspost3.txt")$

$j := 1 .. rows(data)$

$num_bolts := rows(bolt)$

* Note: the "ROEU_uss_interface_naspost3.txt" data file was generated from the NASPOST result (.LIS file) by removing all words and comments. This file is archived along with the other analysis files.

Loads from 2-06 loads model, launch, on-orbit, and abort landing case

Element Identification $ID_j := data_{j,1}$ $rows(ID) = 128$ $cols(ID) = 1$

Load Case Number $LC_j := data_{j,2}$ $rows(LC) = 128$

Axial Load $Fx_j := data_{j,3} \cdot lbf$

Torsion $Mx_j := data_{j,6} \cdot in \cdot lbf$

Shear in Y axis $Fy_j := data_{j,4} \cdot lbf$

Moment about Y axis $My_j := data_{j,7} \cdot in \cdot lbf$

Shear in Z axis $Fz_j := data_{j,5} \cdot lbf$

Moment about Z axis $Mz_j := data_{j,8} \cdot in \cdot lbf$

Applied Bending Moment at Bolts $M_j := 0 \cdot in \cdot lbf$

Rotation of Coordinate System of Loads For Alignment With Coordinate System of Bolt Pattern in Clevis Flange

The loads are recovered in the global coordinate system at the cg of the bolt pattern where the local coordinate system, Xcg, Ycg, Zcg is created. The forces and moments are transformed to the local coordinate system at the cg of the bolt pattern. Two global coordinate system rotations are required, a 5.35 degree rotation about the X axis and a 180 degree rotation about the Z axis.

$u := 5.35 \cdot deg$ $:= 180 \cdot deg$

$$Ftransform := \begin{pmatrix} 1 & 0 & 0 \\ 0 & \cos(u) & -\sin(u) \\ 0 & \sin(u) & \cos(u) \end{pmatrix} \cdot \begin{pmatrix} \cos(\ ) & -\sin(\ ) & 0 \\ \sin(\ ) & \cos(\ ) & 0 \\ 0 & 0 & 1 \end{pmatrix}$$

$$Ftransform = \begin{pmatrix} -1 & 0 & 0 \\ 0 & -0.996 & -0.093 \\ 0 & -0.093 & 0.996 \end{pmatrix}$$

$$Flocal_j := \left[\begin{pmatrix} Fx_j \\ Fy_j \\ Fz_j \end{pmatrix}^T \cdot Ftransform\right]^T \qquad Mlocal_j := \left[\begin{pmatrix} Mx_j \\ My_j \\ Mz_j \end{pmatrix}^T \cdot Ftransform\right]^T$$

$$Fx_j := \left[\left(Flocal_j^T\right)^{\langle 1\rangle}\right]_1 \qquad Fy_j := \left[\left(Flocal_j^T\right)^{\langle 2\rangle}\right]_1 \qquad Fz_j := \left[\left(Flocal_j^T\right)^{\langle 3\rangle}\right]_1$$

$$Mx_j := \left[\left(Mlocal_j^T\right)^{\langle 1\rangle}\right]_1 \qquad My_j := \left[\left(Mlocal_j^T\right)^{\langle 2\rangle}\right]_1 \qquad Mz_j := \left[\left(Mlocal_j^T\right)^{\langle 3\rangle}\right]_1$$

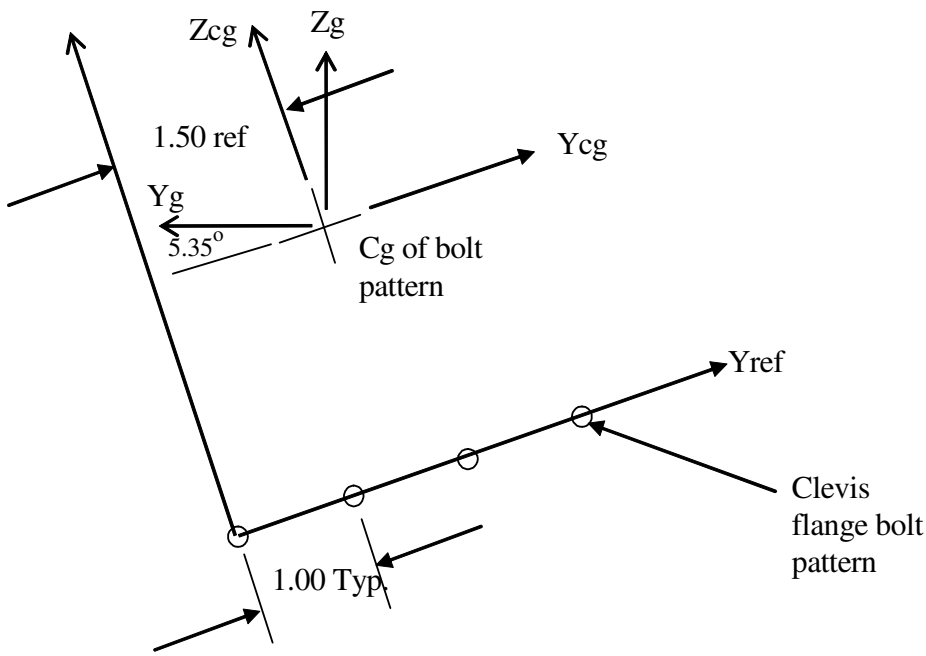

Coordinate Systems For Transformation

Format of Output File

The stack commands below are used to stack the element identifications (ID) and load cases (LC) in ascending order per bolt. The element ID number is located in the first column and the load case numbers, LC, in the second column. For the element identification number, 9900, the bolt number within the bolt pattern is added to the end of each element identification (times 1000). For example, the element identification number 9900 will have bolt numbers 1 thru 8 attached to the end for all 128 load cases. This brings the total number of load cases to 1024 (1 joint x 8 bolts x 128 load cases = 1024). See the array example on the next page.

$ID_j := ID_j \cdot 1000 + 1$ Counter for number of bolts in pattern

$ID2 := \text{stack}(ID, ID+1, ID+2, ID+3, ID+4, ID+5, ID+6, ID+7)$

$LC2 := \text{stack}(LC, LC, LC, LC, LC, LC, LC, LC)$

Moment Distribution

$$M_{tot}^{\langle j \rangle} := \begin{pmatrix} Mx_j \\ My_j \\ Mz_j \end{pmatrix} + r_{load} \times \begin{pmatrix} Fx_j \\ Fy_j \\ Fz_j \end{pmatrix}$$

Use the cross-product to determine the additional moments acting on the fasteners.

$Mx_boltcg_j := M_{tot_{1,j}}$ $\qquad$ $My_boltcg_j := M_{tot_{2,j}}$

$Mz_boltcg_j := M_{tot_{3,j}}$

Tension on bolts

Direct tensile load calculation: $\quad Ftdirect_{i,j} := \dfrac{|Fx_j|}{num_bolts}$

$$Fmz_{i,j} := \begin{cases} 0\cdot lbf & \text{if } (y_i - ycg) = 0\cdot in \\ \dfrac{\left[Mz_boltcg_j\cdot(y_i - ycg)\right]At_i}{\sum_i\left[(y_i - ycg)^2\cdot At_i\right]} & \end{cases}$$

$$Fmy_{i,j} := \begin{cases} 0\cdot lbf & \text{if } (z_i - zcg) = 0\cdot in \\ \dfrac{My_boltcg_j\cdot(z_i - zcg)\cdot At_i}{\sum_i\left[(z_i - zcg)^2\cdot At_i\right]} & \end{cases}$$

Total Tensile load: $Ft_{i,j} := Ftdirect_{i,j} + Fmz_{i,j} + Fmy_{i,j}$

$$\begin{array}{cc} ID & LC \\ \begin{bmatrix} 9900001 & 1001 \\ 9900001 & 1002 \\ \dots & \dots \\ 9900001 & 2064 \\ 9900002 & 1001 \\ 9900002 & 1002 \\ \dots & \dots \\ 9900002 & 2064 \\ \dots & \dots \\ \dots & \dots \\ 9900008 & 1001 \\ 9900008 & 1002 \\ \dots & \dots \\ 9900008 & 2064 \end{bmatrix} \end{array}$$

Array Example

Shear on bolts

Secondary shear on bolts: $Fs_{i,j} := \dfrac{\left(\left|Mx_boltcg_j\right|\right)\cdot r_i\cdot As_i}{\sum_i\left[(r_i)^2\cdot(As_i)\right]}$

Direct shear on bolts: $Fsd_{i,j} := \dfrac{\sqrt{(Fz_j)^2 + (Fy_j)^2}}{num_bolts}$

$Fsd_{1,1} = 28.264\,lbf$

Total shear load: $Fstot_{i,j} := Fsd_{i,j} + Fs_{i,j}$

The stack commands below are used to stack applied axial load (P1), applied shear load (V1), and applied moment (M1) in ascending order per bolt. These loads are put into an array with the element/bolt number and load case number from above. See the "Output" file below.

$$P1 := stack\left[(Ft^T)^{\langle 1\rangle}, (Ft^T)^{\langle 2\rangle}, (Ft^T)^{\langle 3\rangle}, (Ft^T)^{\langle 4\rangle}, (Ft^T)^{\langle 5\rangle}, (Ft^T)^{\langle 6\rangle}, (Ft^T)^{\langle 7\rangle}, (Ft^T)^{\langle 8\rangle}\right]$$

$$V1 := stack\left[(Fstot^T)^{\langle 1\rangle}, (Fstot^T)^{\langle 2\rangle}, (Fstot^T)^{\langle 3\rangle}, (Fstot^T)^{\langle 4\rangle}, (Fstot^T)^{\langle 5\rangle}, (Fstot^T)^{\langle 6\rangle}, (Fstot^T)^{\langle 7\rangle}, (Fstot^T)^{\langle 8\rangle}\right]$$

$M1 := \text{stack}(M, M, M, M, M, M, M, M)$

The "Output" file below outputs an array from left to right starting with the element identification (ID), Load case number (LC), applied load on the bolt (P1), applied shear on the bolt (V1), and applied moment on the bolt (M1). See the output array example below. The array is then written to a text file.

$$Output := \text{augment}\left(ID2, LC2, \frac{P1}{lbf}, \frac{V1}{lbf}, \frac{M1}{in \cdot lbf}\right)$$

(Note: Since the ID and LC numbers are dimensionless, the P1, V1, and M1 values are divided by their units in order to make the array dimensionless.)

$$\begin{array}{ccccc} ID & LC & P1 & V1 & M1 \\ \end{array}$$
$$\begin{bmatrix} 9900001 & 1001 & -141.6 & 39.794 & 0 \\ 9900001 & 1002 & -273.9 & 44.675 & 0 \\ \ldots & \ldots & \ldots & \ldots & \ldots \\ 9900001 & 2064 & 294.7 & 94.445 & 0 \\ 9900002 & 1001 & -100.2 & 39.125 & 0 \\ 9900002 & 1002 & -136.3 & 43.883 & 0 \\ \ldots & \ldots & \ldots & \ldots & \ldots \\ 9900002 & 2064 & 278.2 & 92.972 & 0 \\ \ldots & \ldots & \ldots & \ldots & \ldots \\ \ldots & \ldots & \ldots & \ldots & \ldots \\ 9900008 & 1001 & 200.9 & 39.794 & 0 \\ 9900008 & 1002 & 356.9 & 44.675 & 0 \\ \ldots & \ldots & \ldots & \ldots & \ldots \\ 9900008 & 2064 & -270.0 & 94.445 & 0 \end{bmatrix}$$

Example of Output Array

Size of the "Output" Array: $\text{rows}(Output) = 1024$

(8 bolts x 128 load cases) x 1 joint = 1024 load cases

$\text{WRITEPRN}(\text{"output_forces_ROEU_uss.txt"}) := Output$

CHECK BOLTS (NAS1351N4-20 0.25"-28 UNJF-3A x1.25" L, Material-A-286), Nut NAS1291C4M, Nut Washer NAS1149E0432R, Bolt Head Washer NAS1587-4C

The array from the text file above is read:

$s := 1 .. \text{rows}(\text{Output})$ $\quad$ $\text{rows}(\text{Output}) = 1024$ $\quad$ $\text{cols}(\text{Output}) = 5$

Flange 1: Clevis Plate
Part number: SEG39137676
Material: Al Alloy 7050-T7451 BMS-7-323C

Flange 2: USS-02 Sill Joint Assembly
Part number: SDG39135730-301
Material: Al Alloy 7050-T7451 AMS 4050

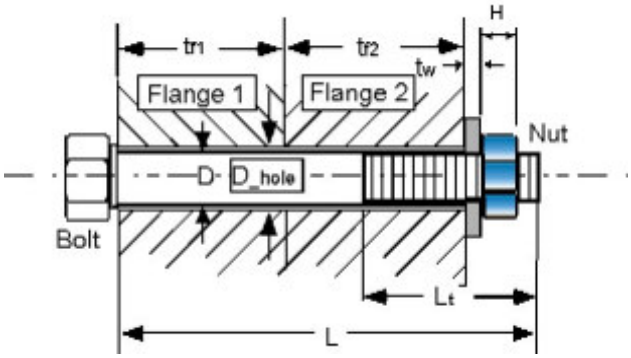

Loads

Node ID $\quad ID_s := Output_{s,1}$

Load Case $\quad LC_s := Output_{s,2}$

Applied tensile load $\quad P_s := Output_{s,3} \cdot lbf$

Applied shear load $\quad V_s := Output_{s,4} \cdot lbf$

Applied bending moment $\quad M_s := Output_{s,5} \cdot in \cdot lbf$

Factors of Safety

Ultimate $\quad SFu := 2.0$ $\quad$ Yield $\quad SFy := 1.25$

Joint Separation $\quad SFsep := 1.2$ $\quad$ Fitting factor $\quad FF := 1.15$

Temperature data

Assembly $\quad Temp_initial := 70 \cdot deg$

Maximum $\quad Temp_max := 120 \cdot deg$

Minimum $\quad Temp_min := 40 \cdot deg$

Bolt and Nut Data

Nominal diameter of bolt $\quad D := .250 \cdot in$ $\quad$ Number of threads/inch $\quad Nt := 28 \cdot \frac{1}{in}$

Total length of bolt $\quad L := 1.25 \cdot in$ $\quad$ Height of nut $\quad H := 0.204 \cdot in$

Threaded length $\quad Lt := 1.00 \cdot in$ $\quad$ (If bolt is fully threaded, input Lt = L)

This file uses the calculations shown in \\escfil02\2i11_mathcad\8307_bolts\thread_data.mcd

Washer Data

Thickness of washers $tw := 0.110 \cdot in$

Outer Diameter of washer $Dw := 0.531in$

Inner Diameter of washer $Dwi := 0.252 \cdot in$

Flange data

Thickness of flange 1 (SEG39137676) $tf1 := 0.375 \cdot in$

Thickness of flange 2 (SDG39135730) $tf2 := .375in$

Diameter of hole (SEG39137676) $D_hole := 0.272 \cdot in$

Bolt head dia. across flats $dw := 0.490 \cdot in$ (used only if there is no washer)

Note: If there is no washer tw, Dw and Dwi should be zero

Material Property Data

Bolt

Temperature correction factor for bolt strength ultimate. (Ref. MMPDS, fig. 6.2.1.1.1) $TSu_bolt := 0.98$ Yield $TSy_bolt := 0.98$

Bolt ultimate tensile allowable stress $Ftu_bolt := 160000 \cdot psi$ (Ref. NAS1351N)

Bolt ultimate shear allowable stress $Fsu_bolt := 0.6 \cdot Ftu_bolt$

Bolt yield Tensile allowable stress $Fty_bolt := 120000 \cdot psi$

Temperature correction factor for bolt modulus $TE_bolt := 0.98$ (Ref. MMPDS, fig. 6.2.1.1.4(a))

Modulus of elasticity of bolt $E_bolt := \left(29.1 \cdot 10^{6} \cdot psi\right)$ (Ref. MMPDS, table 6.2.1.0(b))

Thermal coefficient for bolt (Ref. MMPDS, fig. 6.2.1.0) $=_bolt_hot := 9.1 \cdot 10^{-6} \cdot \frac{\frac{in}{in}}{deg}$ $=_bolt_cold := 8.9 \cdot 10^{-6} \cdot \frac{\frac{in}{in}}{deg}$

Nut

Temperature correction factor for nut strength $TS_nut := 0.98$

Ultimate tensile allowable stress $Ftu_nut := 125000 \cdot psi$ (Ref. NAS1291, A-286)

Ultimate Shear allowable stress: $Fsu_nut := 0.6 \cdot Ftu_nut$

Ultimate axial strength of nut $Ptu_nut := 4580 \cdot lbf$ (Ref. NAS1291, A-286)

Washer

Temperature correction factor for washer modulus $TE_washer := 0.98$ (Ref. MMPDS, fig. 6.2.1.1.1)

Modulus of elasticity of washer: $E_washer := \left(29.1 \cdot 10^{6} \cdot psi\right)$ (Ref. MMPDS, table 6.2.1.0(b))

Flanges

Stiffness of the joint depends upon number of members in the grip of the fasteners,
Modulus of elasticity of these members, and diameters of the bolt and the washer.

Temperature correction factor for flange 1 $Tf1E := 0.98$ (modulus)

Temperature correction factor for flange 2 $Tf2E := 0.98$

Modulus of elasticity for the parts in the joint $E_flange1 := \left(10.3 \cdot 10^{6} \cdot psi\right)$ $E_flange2 := \left(10.3 \cdot 10^{6} \cdot psi\right)$

(Ref. for flange 1: MMPDS, table 3.7.6.0(b_3))

(Ref. for flange2 Ref. MMPDS, table 3.7.4.0(b_1))

Coefficient of thermal expansion for flanges $=_flange1_hot := 12.5 \cdot 10^{-6} \cdot \frac{\frac{in}{in}}{deg}$ $=_flange2_hot := 12.5 \cdot 10^{-6} \cdot \frac{\frac{in}{in}}{deg}$

(Ref. MMPDS, figure 3.7.6.0 and Appendix C9)

$=_flange1_cold := 12.1 \cdot 10^{-6} \cdot \frac{\frac{in}{in}}{deg}$ $=_flange2_cold := 12.1 \cdot 10^{-6} \cdot \frac{\frac{in}{in}}{deg}$

Torque/Preload data

Maximum torque (60% of yield) $Tmax := 97.3 \cdot in \cdot lbf$ Loading plane factor $n := 0.5$

Minimum torque (95% of Tmax) $Tmin := 82.7 in \cdot lbf$ Preload Uncertainty $y := 0.25$

Torque coefficient $k := 0.15$

This file uses the calculations shown in \\escfil02\2i11_mathcad\8307_bolts\multi_bolt_stiffness_nut_RevC

Prepared By	Name	Date		File Name
	Victor Holloman	02/06/07	Engineering and Science Contract Group	Bfraf_utbb.mcd
Checked By	C. Bala		*Structural Analysis Section*	Drawing No. SEG39137677
Title	Analysis of Bolts Attaching ROEU Arm Flange to Sill Joint			

Bolt Load data

Bolt/joint stiffness factor	, $= 0.237$	Preload due to temperature	$Pthr_pos = 123.9 \cdot lbf$
Max. preload	$PLDmax = 3367.3 \cdot lbf$		$Pthr_neg = -70 \cdot lbf$
Min. preload	$PLDmin = 1421.8 \cdot lbf$	Uncertainty factor	$y = 0.25$
Joint separation load	$max(Psep) = 653.247 \cdot lbf$	Torque coefficient	$k = 0.15$
Max. load on the bolt(ultimate)	$max(Pb) = 3515.7 \cdot lbf$	Loading plane factor	$n = 0.5$
Max. load on the bolt(yield)	$max(Pby) = 3460 \cdot lbf$	Thread pullout strength required to develop full strength of bolt	$PAs = 6638.8 \cdot lbf$
Bolt ultimate tensile strength	$PAt = 4488.4 \cdot lbf$	Nut ultimate tensile strength	$Ptu_nut = 4488.4 \cdot lbf$

Length_check = "Bolt length is sufficient"

Summary of Margins for bolt:

Joint separation	$MS_min_{1,1} = 1.147$	Direct Thread shear Ultimate	$MS_min_{6,1} = 4.302$
Direct Tension Ultimate	$MS_min_{2,1} = 2.585$	Total Thread shear Ultimate	$MS_min_{7,1} = 0.888$
Direct Tension Yield	$MS_min_{3,1} = 4.302$	Shear Ultimate	$MS_min_{8,1} = 12.62$
Total Tension Ultimate	$MS_min_{4,1} = 0.277$	Bending Ultimate	$MS_min_{9,1} = 10$
Total Tension Yield	$MS_min_{5,1} = 0.199$	Combined shear, tension and bending ultimate	$MS_min_{10,1} = 0.276$

Determination of the smallest margin of safety for the bolt, and the failure mode:

$MSbolt := min(MS)$

$MSbolt = 0.199$ Minimum Margin of Safety

Failure_Mode = "Total Tension Yield"

$MS_min_ID = 9900001$	Element Identification (9900001) and Bolt Number (1) for Minimum Margin
$MS_min_LC = 2027$	Load Case Number for Minimum Margin
$MS_min_P = 544.4$	Applied Tensile Load for Minimum Margin

$MS_min_V = 80.5$ Applied Shear Load for Minimum Margin

$MS_min_M = 0$ Applied Bending Moment for Minimum Margin

Fail-Safe Analysis For ROEU Assembly to Sill Joint Bolts

Fail-Safe analysis assumes the bolt with the lowest margin of safety will be the first to fail. The 7 remaining fasteners are required to maintain positive margins of safety for joint stability. Bolt no. 1 has the lowest margin and hence it is removed. (Ref. page 5.11.6.1-13)

thread/in

$$bolt2 := \begin{pmatrix} 0.2500 & 28 \\ 0.2500 & 28 \\ 0.2500 & 28 \\ 0.2500 & 28 \\ 0.2500 & 28 \\ 0.2500 & 28 \\ 0.2500 & 28 \end{pmatrix}$$

$s := 1 .. rows(bolt2)$

pitch of bolt $N2_s := bolt2_{s,2} \cdot \frac{1}{in}$

bolt diameter $D2_s := bolt2_{s,1} \cdot in$

Tensile Area of bolt

$$At2_s := \beta \cdot \left(\frac{D2_s - 0.9743 \cdot \frac{1}{N2_s}}{2} \right)^2$$

Shear Area of bolt

$$As2_s := \beta \cdot \left(\frac{D2_s - 1.299038 \cdot \frac{1}{N2_s}}{2} \right)^2$$

Bolt no.	x co-ord	y co-ord	z co-ord
2	0.0	1.000	0.000
3	0.0	2.000	0.000
4	0.0	3.000	0.000
5	0.0	0.000	7.875
6	0.0	1.000	7.875
7	0.0	2.000	7.875
8	0.0	3.000	7.875

$x2 := \begin{pmatrix} 0.0 \\ 0.0 \\ 0.0 \\ 0.0 \\ 0.0 \\ 0.0 \\ 0.0 \end{pmatrix} \cdot in$ $y2 := \begin{pmatrix} 1.000 \\ 2.000 \\ 3.000 \\ 0.000 \\ 1.000 \\ 2.000 \\ 3.000 \end{pmatrix} \cdot in$ $z2 := \begin{pmatrix} 0.000 \\ 0.000 \\ 0.000 \\ 7.875 \\ 7.875 \\ 7.875 \\ 7.875 \end{pmatrix} in$

Location of applied forces and moments

The center of gravity of the load (shown as cgload2) is the center of gravity of the bolt pattern for the 8 bolt configuration and was calculated on page 5.11.6.1-4. Since the x direction is into the plate the loads are shared equally between the bolts in the y and z directions. However, due to a failure in bolt 1, the y and z directions in the bolt pattern are unsymmetric and have offsets from the center of gravity of the load.

$xforce2 := 0.0in$ $\quad yforce2 := 1.50in$ $\quad zforce2 := 3.937in$

$$cgload2 := \begin{pmatrix} xforce2 \\ yforce2 \\ zforce2 \end{pmatrix} \qquad cgload2 = \begin{pmatrix} 0 \\ 1.5 \\ 3.937 \end{pmatrix} \cdot in$$

Center of gravity of bolt group

$$xcg2 := \frac{\sum_s x2_s}{rows(x2)} \qquad ycg2 := \frac{\sum_s y2_s}{rows(y2)} \qquad zcg2 := \frac{\sum_s z2_s}{rows(z2)}$$

$xcg2 = 0 \cdot in$ $\quad ycg2 = 1.714 \cdot in$ $\quad zcg2 = 4.5 \cdot in$

$$cg_{bolt2} := \begin{pmatrix} xcg2 \\ ycg2 \\ zcg2 \end{pmatrix} \qquad cg_{bolt2} = \begin{pmatrix} 0 \\ 1.714 \\ 4.5 \end{pmatrix} \cdot in$$

Load Vector

$$r_{load2} := cgload2 - cg_{bolt2}$$

$$r_{load2} = \begin{pmatrix} 0 \\ -0.214 \\ -0.563 \end{pmatrix} \cdot in$$

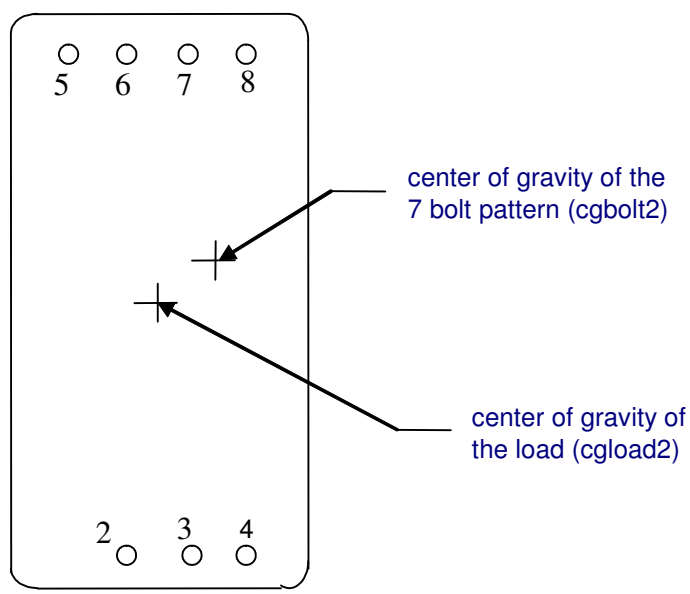

ROEU Clevis Flange 7 Bolt Pattern For Failsafe Analysis

Distance from CG of Bolts to individual bolts for shear calculations:

$$r2_s := \sqrt{\left(z2_s - zcg2\right)^2 + \left(y2_s - ycg2\right)^2} \qquad r2_s = \begin{pmatrix} 4.556 \\ 4.509 \\ 4.680 \\ 3.785 \\ 3.450 \\ 3.387 \\ 3.612 \end{pmatrix} \cdot in$$

Reading database file for bolted joint, fail-safe case

$data := READPRN(\text{"ROEU_uss_interface_naspost3.txt"})$ $\qquad ID2 := 0 \qquad LC2 := 0$

$q := 1 .. rows(data) \qquad num_bolts2 := rows(bolt2)$

Loads from 2-06 loads model

Axial Load $\quad Fx2_q := data_{q,3} \cdot lbf$

Shear in Y axis $\quad Fy2_q := data_{q,4} \cdot lbf$

Shear in Z axis $\quad Fz2_q := data_{q,5} \cdot lbf$

Element Identification $\quad ID2_q := data_{q,1}$

Load Case Number $\quad LC2_q := data_{q,2}$

Torsion $\quad Mx2_q := data_{q,6} \cdot in \cdot lbf$

Moment about Y axis $\quad My2_q := data_{q,7} \cdot in \cdot lbf$

Moment about Z axis $\quad Mz2_q := data_{q,8} \cdot in \cdot lbf$

Counter for number of bolts in pattern:

$ID2_q := ID2_q \cdot 1000 + 1$

Applied Bending Moment at Bolts $\quad M2_q := 0 \cdot in \cdot lbf$

Format of Output File

The stack command below is used to stack the element identifications (ID2) and load cases (LC2) in ascending order per bolt. See the array example above for explanation. Note: bolt number 1 is not included.

$ID2 := stack(ID2 + 1, ID2 + 2, ID2 + 3, ID2 + 4, ID2 + 5, ID2 + 6, ID2 + 7)$

$LC2 := stack(LC2, LC2, LC2, LC2, LC2, LC2, LC2)$

Loads Transformation

$$Flocal2_q := \left[\begin{pmatrix} Fx2_q \\ Fy2_q \\ Fz2_q \end{pmatrix}^T \cdot Ftransform\right]^T \qquad Mlocal2_q := \left[\begin{pmatrix} Mx2_q \\ My2_q \\ Mz2_q \end{pmatrix}^T \cdot Ftransform\right]^T$$

$$Fx2_q := \left[\left(Flocal2_q^{\,T}\right)^{\langle 1\rangle}\right]_1 \qquad Fy2_q := \left[\left(Flocal2_q^{\,T}\right)^{\langle 2\rangle}\right]_1 \qquad Fz2_q := \left[\left(Flocal2_q^{\,T}\right)^{\langle 3\rangle}\right]_1$$

$$Mx2_q := \left[\left(Mlocal2_q^{\,T}\right)^{\langle 1\rangle}\right]_1 \qquad My2_q := \left[\left(Mlocal2_q^{\,T}\right)^{\langle 2\rangle}\right]_1 \qquad Mz2_q := \left[\left(Mlocal2_q^{\,T}\right)^{\langle 3\rangle}\right]_1$$

Moment Distribution

$$M_{tot2}^{\langle q\rangle} := \begin{pmatrix} Mx2_q \\ My2_q \\ Mz2_q \end{pmatrix} + r_{load2} \times \begin{pmatrix} Fx2_q \\ Fy2_q \\ Fz2_q \end{pmatrix}$$

Use the cross-product to determine the additional moments acting on the fasteners.

$$Mx_boltcg2_q := M_{tot2_{1,q}} \qquad My_boltcg2_q := M_{tot2_{2,q}} \qquad Mz_boltcg2_q := M_{tot2_{3,q}}$$

Tension on bolts

Direct tensile load calculation: $$Ftdirect2_{s,q} := \frac{\left|Fx2_q\right|}{num_bolts2}$$

$$Fmz2_{s,q} := \begin{cases} 0\cdot lbf & \text{if } \left(y2_s - ycg2\right) = 0\cdot in \\ \dfrac{\left[Mz_boltcg2_q\cdot\left(y2_s - ycg2\right)\right]At2_s}{\sum_s\left[\left(y2_s - ycg2\right)^2\cdot At2_s\right]} \end{cases} \qquad Fmy2_{s,q} := \begin{cases} 0\cdot lbf & \text{if } \left(z2_s - zcg2\right) = 0\cdot in \\ \dfrac{My_boltcg2_q\cdot\left(z2_s - zcg2\right)\cdot At2_s}{\sum_s\left[\left(z2_s - zcg2\right)^2\cdot At2_s\right]} \end{cases}$$

$Ft2_{s,q} := Ftdirect2_{s,q} + Fmz2_{s,q} + Fmy2_{s,q}$ Total Tensile load

Shear on bolts

Secondary shear on bolts $Fs2_{s,q} := \dfrac{\left|Mx_boltcg2_q\right| \cdot r2_s \cdot As2_s}{\sum_s \left[\left(r2_s\right)^2 \cdot \left(As2_s\right)\right]}$

Direct shear on bolts $Fsd2_{s,q} := \dfrac{\sqrt{\left(Fz2_s\right)^2 + \left(Fy2_s\right)^2}}{num_bolts2}$

Total shear load $Fstot2_{s,q} := Fsd2_{s,q} + Fs2_{s,q}$

The stack commands below are used to stack applied axial load (P2), applied shear load (V2), and applied moment (M2) in ascending order per bolt. These loads are placed in an array with the element/bolt number and load case number from above. See the "Output2" file below. Notice how there are only 7 bolts, since bolt number 1 is excluded.

$$P2 := stack\left[\left(Ft2^T\right)^{\langle 1\rangle}, \left(Ft2^T\right)^{\langle 2\rangle}, \left(Ft2^T\right)^{\langle 3\rangle}, \left(Ft2^T\right)^{\langle 4\rangle}, \left(Ft2^T\right)^{\langle 5\rangle}, \left(Ft2^T\right)^{\langle 6\rangle}, \left(Ft2^T\right)^{\langle 7\rangle}\right]$$

$$V2 := stack\left[\left(Fstot2^T\right)^{\langle 1\rangle}, \left(Fstot2^T\right)^{\langle 2\rangle}, \left(Fstot2^T\right)^{\langle 3\rangle}, \left(Fstot2^T\right)^{\langle 4\rangle}, \left(Fstot2^T\right)^{\langle 5\rangle}, \left(Fstot2^T\right)^{\langle 6\rangle}, \left(Fstot2^T\right)^{\langle 7\rangle}\right]$$

$$M2 := stack(M2, M2, M2, M2, M2, M2, M2)$$

The "Output2" file below outputs an array from left to right starting with the element identification (ID2), Load case number (LC2), applied load on the bolt (P2), applied shear on the bolt (V2), and applied moment on the bolt (M2). See the output array example above. The array is written to a text file.

$Output2 := augment\left(ID2, LC2, \dfrac{P2}{lbf}, \dfrac{V2}{lbf}, \dfrac{M2}{in \cdot lbf}\right)$ (Note: Since the ID2 and LC2 numbers are dimensionless, the P2, V2, and M2 values are divided by their units in order to make the array dimensionless.)

$WRITEPRN(\text{"output_forces_ROEU_failsafe.txt"}) := Output2$

Size of the "Output2" Array: $rows(Output2) = 896$ $cols(Output2) = 5$

(7 bolts x 128 load cases) x 1 joint = 896 load cases

Bolt Fail-safe Results

The array from the text file above is read:

data_fs := READPRN("output_forces_ROEU_failsafe.txt")

$s := 1 .. rows(data_fs)$ $\quad rows(data_fs) = 896$ $\quad cols(data_fs) = 5$

Fail-safe Loads

Node ID $ID_FS_s := data_fs_{s,1}$

Load Case $LC_FS_s := data_fs_{s,2}$

Applied tensile load $P_FS_s := data_fs_{s,3} \cdot lbf$

Applied shear load $V_FS_s := data_fs_{s,4} \cdot lbf$

Applied bending moment $M_FS_s := data_fs_{s,5} \cdot in \cdot lbf$

Factors of Safety

Ultimate $SFu_FS := 1.0$ Yield $SFy := 1.0$

Joint Separation $SFsep_FS := 1.0$ Fitting factor $FF := 1.15$

Temperature data

Assembly $Temp_initial := 70 \cdot deg$

Maximum $Temp_max := 120 \cdot deg$

Minimum $Temp_min := 40 \cdot deg$

This file uses the calculations shown in \\escfil02\2i11_mathcad\8307_bolts\ multi_bolt_stiffness_nut_FS_RevC

Fail Safe Stiffness File

Bolt Fail-safe Load data

Joint separation load $max(Psep_FS) = 690.819 \cdot lbf$

Max. load on the bolt(ultimate) $max(Pb_FS) = 3461.5 \cdot lbf$

$rows(Output) = 896$

Summary of fail-safe Margins for bolt:

Joint separation	$MS_minFS_{1,1} = 1.030$	Total Thread shear Ultimate	$MS_minFS_{5,1} = 0.918$
Direct Tension Ultimate	$MS_minFS_{2,1} = 4.650$	Shear Ultimate	$MS_minFS_{6,1} = 40.78$
Total Tension Ultimate	$MS_minFS_{3,1} = 0.2967$	Bending Ultimate	$MS_minFS_{7,1} = 10$
Direct Thread shear Ultimate	$MS_minFS_{4,1} = 7.36$	Combined shear, tension and bending ultimate	$MS_minFS_{8,1} = 0.2967$

Determination of the smallest fail-safe margin of safety for the bolt, and the failure mode:

$MSbolt_FS := \min(MS_FS)$

$MSbolt_FS = 0.297$ Failure_Mode_FS = "Combined Shear Tension Bending Ultimate"

$MS_min_ID = 9900005$	Element Identification (9900005) and Bolt Number (5) for Minimum Margin
$MS_min_LC = 1017$	Load Case Number for Minimum Margin
$MS_min_P = 690.8$	Applied Tensile Load for Minimum Margin
$MS_min_V = 23.7$	Applied Shear Load for Minimum Margin
$MS_min_M = 0$	Applied Bending Moment for Minimum Margin

5.11.6.2 ROEU Bearing Failure Analysis

Section 5.11.6.2 ROEU/USS Interface

Foldable ROEU Clevis

Part No.: SEG39137677

Stress Check at Bolt Hole for ROEU Clevis Assembly

The total shear load applied to the bolts is used to determine the bering stress and shear tear-out of the clevis flange. The drawing number for the ROEU Clevis Assemble is SEG39137676. See page 5.11.6.1-2 for diagram of ROEU Assembly. The internal forces, P, V, and M were determined in section 5.11.6.

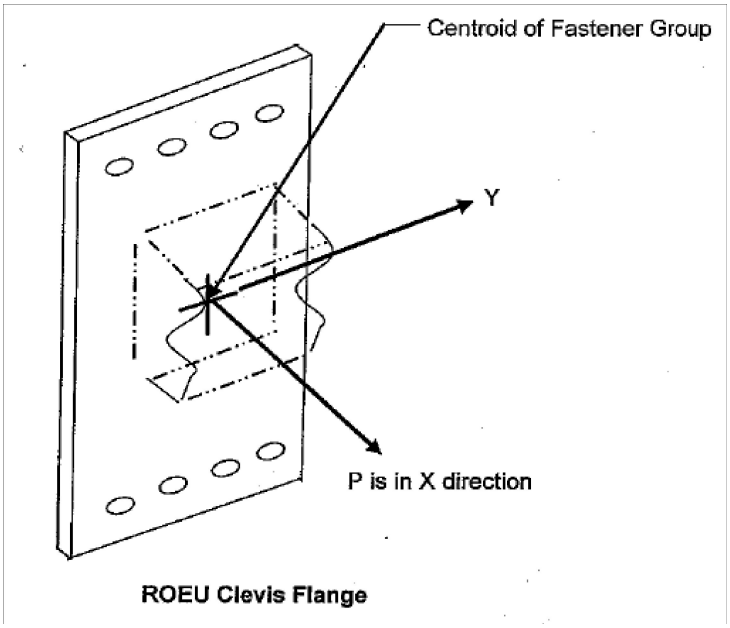

ROEU Clevis Flange

Clevis Flange Geometry:

Hole Diameter $d := \mathbf{0.250} \cdot in$

Plate Thickness $tp := \mathbf{0.375} \cdot in$

Bearing Area $Ab := d \cdot tp$

Edge Distance $e := \mathbf{0.360} \cdot in$

$\frac{e}{d} = \mathbf{1.440}$ $\quad Ab = \mathbf{0.094}\, in^{\mathbf{2.000}}$

Material Property Data for SDG39137676-001, 7050-T7451, AMS 4050, Plate, 4-5in, A (Ref.: Table 3.7.4.0(b1) MMPDS-03)

Bearing Allowables

Ultimate, e/d = 1.5 $Fbru_1 := \mathbf{107000} \cdot psi$

Ultimate, e/d = 2.0 $Fbru_2 := \mathbf{138000} \cdot psi$

Yield, e/d = 1.5 $Fbry_1 := \mathbf{90000} \cdot psi$

Yield, e/d = 2.0 $Fbry_2 := \mathbf{105000} \cdot psi$

Shear Allowable

$Fsu := \mathbf{43000} \cdot psi$

Select Bearing Allowables Based on e/d Ratio:

$$Fbrult := \begin{cases} \dfrac{Fbru_1}{1.5 - .5} \cdot \left(\dfrac{e}{d} - .5\right) & \text{if } .5 \le \dfrac{e}{d} < 1.499 \\ Fbru_1 & \text{if } 1.499 < \dfrac{e}{d} < 2.0 \\ Fbru_2 & \text{if } \dfrac{e}{d} \ge 2.0 \\ 0 \cdot psi & \text{otherwise} \end{cases}$$

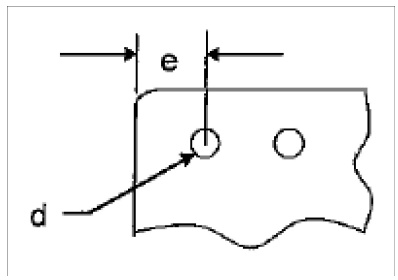

$Fbrult = 100580\ psi$

$$Fbryld := \begin{cases} \dfrac{Fbry_1}{1.5 - .5} \cdot \left(\dfrac{e}{d} - .5\right) & \text{if } .5 \le \dfrac{e}{d} < 1.499 \\ Fbry_1 & \text{if } 1.499 < \dfrac{e}{d} < 2.0 \\ Fbry_2 & \text{if } \dfrac{e}{d} \ge 2.0 \\ 0 \cdot psi & \text{otherwise} \end{cases}$$

$Fbryld = 84600\ psi$

Factors of Safety

Ultimate $SFu := 2.0$ *Yield* $SFy := 1.25$

Fitting Factor $FF := 1.15$

Temperature Data

Assembly $Temp_initial := 70 \cdot deg$

Maximum $Temp_max := 120 \cdot deg$

Minimum $Temp_min := 40 \cdot deg$

Temperature Correction Factor for Flange Ultimate Bearing Strength

Ref. MMPDS-03, For 7050 Temperature Correction Factors for Bearing are N/A, so Using Temperature Correction Factors for Ftu and Fty.

$TSu := 0.95$ $TSy := 0.98$

Reading Output Forces Obtained at Centroid of Bolt Pattern

data := READPRN(**"output_forces_ROEU_uss.txt"**)

Maximum Axial Load in Data:

$Axial := data^{\langle 2 \rangle} \cdot lbf$ $\quad P_{max} := max(Axial)$ $\quad P_{min} := min(Axial)$

$min(Axial) = -528.327\,lbf$ $\quad data_{0,0} = 9.900 \times 10^{6}$ $\quad P_{max} = 544.372\,lbf$ $\quad P_{min} = -528.327\,lbf$

Maximum Shear Load in Data:

$Shear := data^{\langle 3 \rangle} \cdot lbf$ $\quad V_{max} := max(Shear)$ $\quad V_{min} := min(Shear)$

$V_{max} = 97.790\,lbf$ $\quad V_{min} = 8.296\,lbf$

Maximum Load Per Bolt:

$P_z := V_{max}$ $\quad P_z = 97.790\,lbf$

Maximum Bearing Stress:

$\beta b := P_z \cdot \frac{FF}{Ab}$ $\quad \beta b = 1199.554\,psi$

$F_{bru} := Fbrult \cdot TSu$ $\quad F_{bru} = 9.555 \times 10^{4}\,psi$

Margin of Safety:

$MS_{br} := \frac{F_{bru}}{\beta b \cdot SFu} - 1$ $\quad MS_{br} = 38.828$ $\quad$ ***... Bearing MS***

Shear Tear Out

Shear Out Area:

$$As := 2 \cdot \left(e - \frac{d}{2}\right) \cdot tp \qquad As = 0.176\,in^{2.000}$$

Allowable Shear Strength:

$$Fsu = 4.300 \times 10^{4}\,psi$$

Maximum Shear Tear Out Stress:

$$us := P_z \cdot \frac{FF}{As} \qquad us = 638.061\,psi$$

Margin of Safety:

$$MS_{shear} := \frac{Fsu}{us \cdot SFu} - 1 \qquad MS_{shear} = 32.696$$

... Shear Tear Out MS

5.11.6.3 ROEU PDA Bracket, Pin, and Lug Analysis

Section 5.11.6.3 ROEU PDA Bracket, Pin, and Lug Analysis
Part no.: SEG39137678 & SEG39137676

ORIGIN := 1

INTRODUCTION:

The ROEU clevis is attached to the PDA bracket lug with two removable pins and a cap screw. The two pins, one on each side of the cap screw prevent rotation of the PDA bracket lug in the x - z plane. The pins and the cap screw are in double shear. Analysis of the cap screw assumes the pins are in place with maximum loads applied in the x, y and z directions. The removable pins are of the same size and type, but different in design and tolerance limits from the center cap screw. Reference: Astronautic Structures Manual, NASA - TM - X - 73305, Vol. 1, section B 2. See drawing no. SDG39137676, SEG39137677, and SDG39137678.

LOADS: (Ref. section 5.11.6.1-5 ROEU Assembly Bolt Analysis)

The load cases are comprised of launch and abort landing load cases. Loads were obtained from a modified 2-06 loads model. The data recovered are the MPC forces for node 9900, which represents the end of the CBUSH connected to the beam. These loads are recovered at the center of gravity of the bolt pattern in the clevis flange. Post processing was performed in NASPOST for forces and moments in the x, y, and z directions.

ANALYSIS METHOD:

The loads obtained from the loads model are applied using classical hand calculation methods. Forces in the x and z directions and moments about the x, y, and z axes distribute direct shearing forces to the fasteners. The difference in sizes of the fasteners is based on the dimensional tolerances given in the specifications. The loads are distributed proportionately to the fasteners based on these differences such that the minimum margins of safety are produced. Moments Mx, My and Mz are expressed as couple forces and are added to the shearing forces Fz and Fx. These forces represent the axial and transverse loads for tear-out and lug analysis.

FACTORS OF SAFETY:

The factors of safety utilized are 2.0 for ultimate and 1.25 for yield. The temperature exposure range is 40 degrees F. to 120 degrees F.

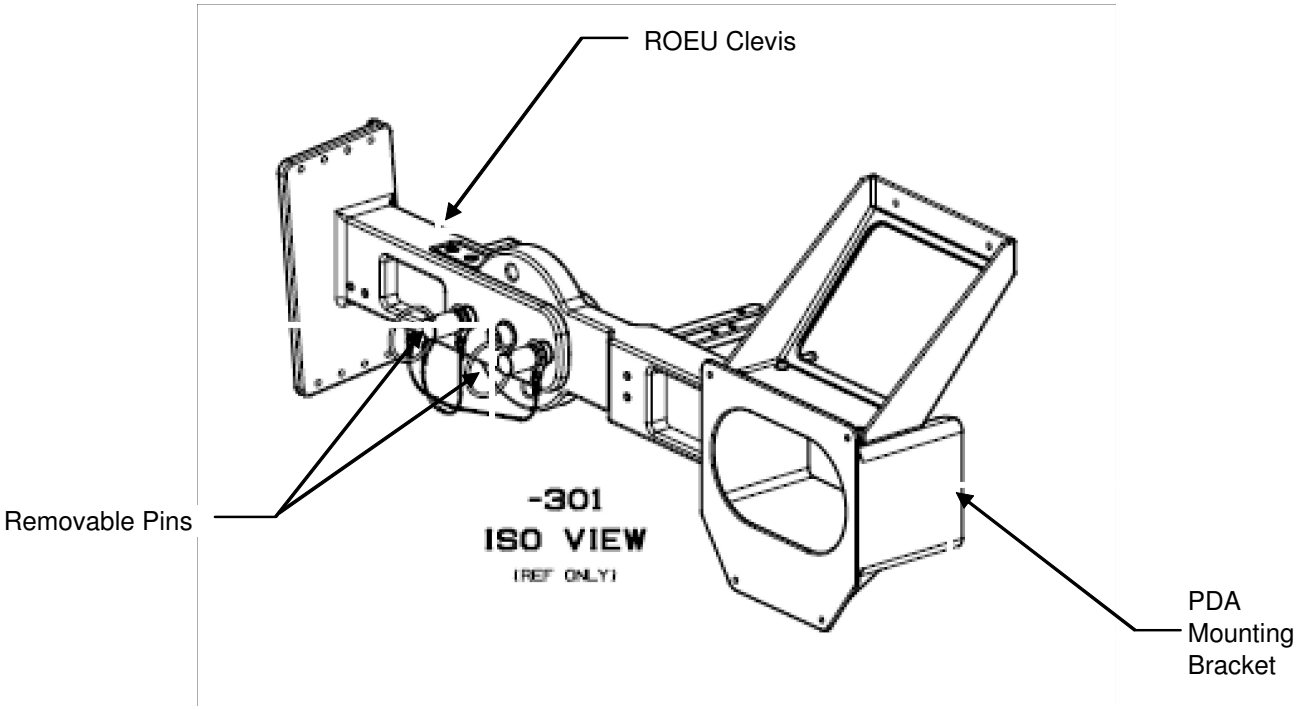

Figure 1: ROEU Clevis Assembly and PDA Mounting Bracket

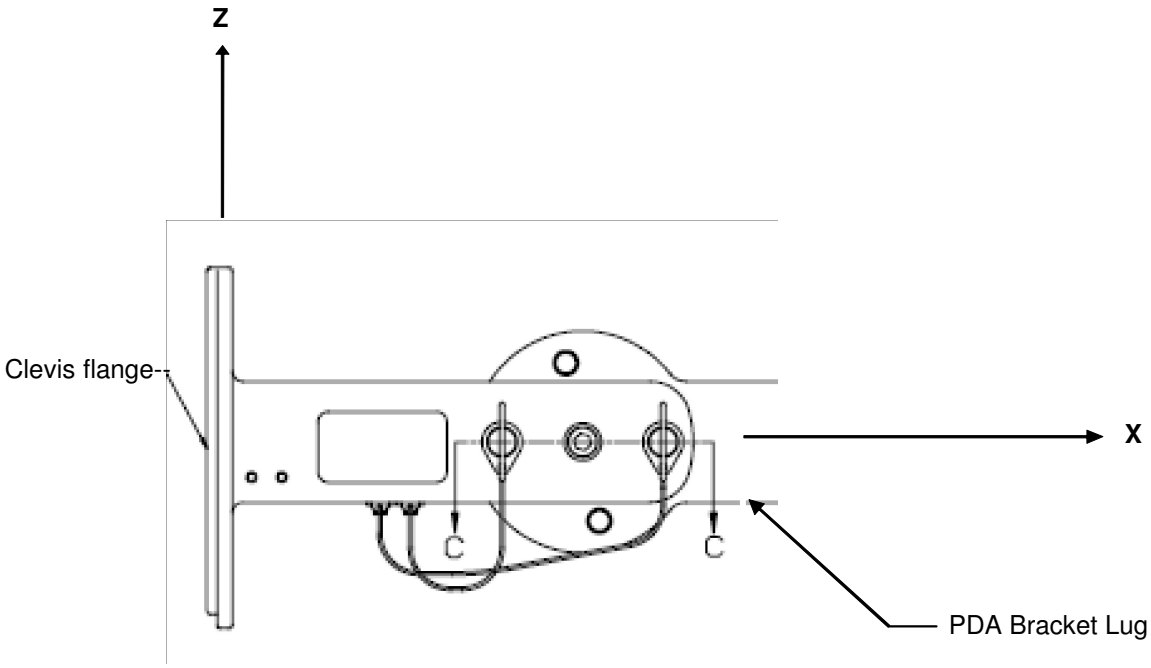

Figure 2: Clevis and Bracket Attachment

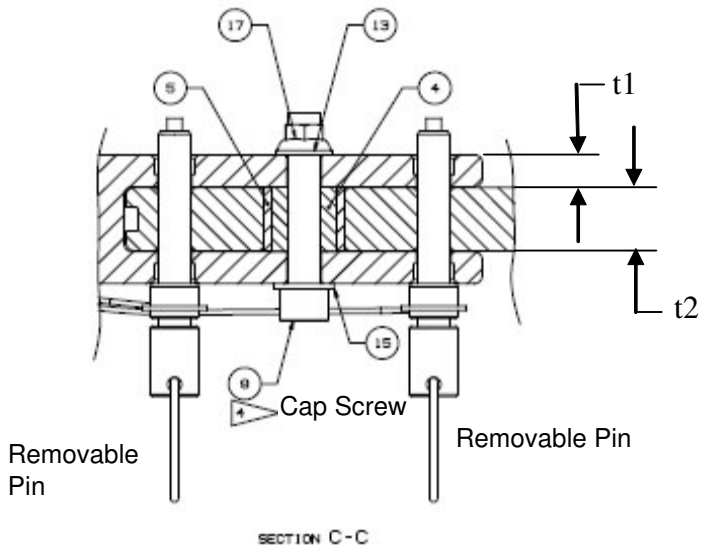

Figure 3: See drawing no. SEG39137677

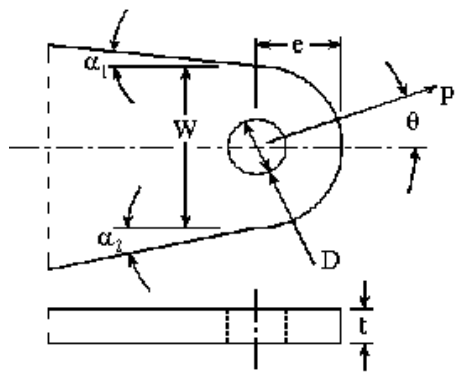

Figure 4: Generic Lug Dimensions

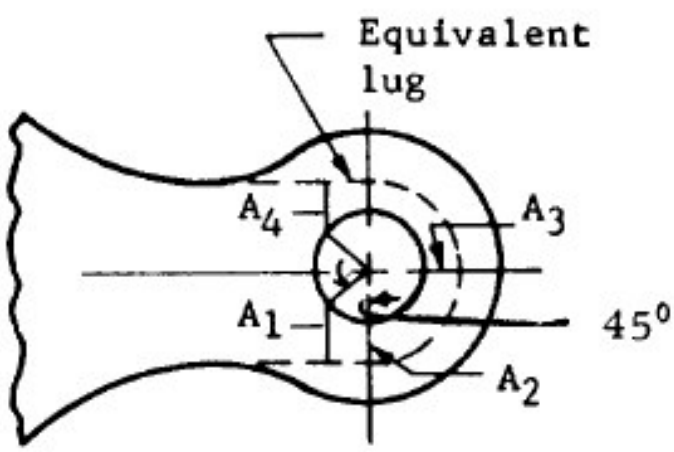

Figure 5: Areas of Lug for Calculating Shape Parameter

Geometry (See figures above): The PDA mounting bracket represents the lug. Lug dimensions are:

(Reference: SEG39137678)

Lug thickness: $t_2 := 0.985 \cdot in$

Width of lug: $W_{lug} := 5.50 \cdot in$

Lug edge distance: $e_{lug} := 0.751 \cdot in$

Lug hole Diameter: $D_{lug} := .525 \cdot in$

Prepared By	Name	Date	Engineering and Science Contract Group	File Name
	Victor Holloman	02/09/07		Lug_brkt Analysis.mcd
Checked By	C. Bala		*Structural Analysis Section*	Drawing No. SDG39137678
Title	Analysis of Clevis Assembly And PDA Mounting Bracket			

Clevis thickness: $t_1 := 0.500 \cdot in$

Center Cap Screw: NAS1351N8-44

Bolt ultimate tensile allowable stress $Ftu_bolt := 160000 \cdot psi$ (Ref. NAS1351N)

Bolt ultimate shear allowable stress $Fsu_bolt := 0.6 \cdot Ftu_bolt$

Bolt yield Tensile allowable stress $Fty_bolt := 120000 \cdot psi$

Cap screw maximum shank diameter: $d_{max} := 0.500 \cdot in$

Cap screw minimum shank diameter: $d_{min} := .4919 \cdot in$

Double Acting Space Pin: 56789R8-15DL10C6

Space pin maximum diameter: $pin_{max} := .4985 \cdot in$ Minimum double shear value: 28622 lbf

Space pin minimum diameter: $pin_{min} := .4970 \cdot in$

Material Properties of ROEU Clevis, SDG39137676, and PDA Bracket, SDG39137678 7050-T7451, AMS 4050, Plate, 4.0-5.0 inch, A.

(Ref: MMPDS-03, Table 3.7.4.0(b1))

Tensile allowable, Ultimate, ST: $Ftu := 67000 \cdot psi$

Yield, ST: $Fty := 57000 \cdot psi$

Shear allowable $Fsu := 43000 \cdot psi$

Bearing allowables

Ultimate, e/d = 1.5 $Fbru_1 := 107000 \cdot psi$ Yield e/d = 1.5 $Fbry_1 := 90000 \cdot psi$

Ultimate, e/d = 2.0 $Fbru_2 := 138000 \cdot psi$ Yield e/d = 2.0 $Fbry_2 := 105000 \cdot psi$

Factors of Safety

Ultimate $SFu := 2.0$ Yield $SFy := 1.25$

Fitting factor $FF := 1.15$

Temperature data (Ref: AMS-02 Launch and Abort Landing Temperatures)

Assembly $Temp_initial := 70 \cdot deg$

Maximum $Temp_max := 120 \cdot deg$

Minimum $Temp_min := 40 \cdot deg$

Ultimate and Yield Thermal Degradation Factors:

$Tsub := 0.95$ $Tsyb := 0.98$ (Ref. MMPDS-03, Fig. 3.7.4.2.1(a)&(b). Bearing Temperature Degradation Factors Not Available So Using Factors for Ftu & Fty).

$F_{bru} := Tsub \cdot Fbru_1$ $F_{bry} := Tsyb \cdot Fbry_1$

$F_{bru} = 101650 \cdot psi$ $\quad F_{bry} = 88200 \cdot psi$

$Tsu := 0.95$ $\quad Tsy := 0.98$ (Ref. MMPDS-03, Figs. 3.7.4.2.1(a)&(b))

$F_{tu} := Tsu \cdot Ftu$ $\quad F_{ty} := Tsy \cdot Fty$ $\quad F_{su} := Tsu \cdot Fsu$

$F_{tu} = 63650 \cdot psi$ $\quad F_{ty} = 55860 \cdot psi$ $\quad F_{su} = 40850.000\ psi$

Reading NASPOST file for loads

data := READPRN("ROEU_uss_interface_naspost3.txt")

$j := 1 .. rows(data)$

*** Note: the "ROEU_uss_interface_naspost3.txt" data file was generated from the NASPOST result (.LIS file) by removing all words and comments. This file is archived along with the other analysis files.**

Loads from 2-06 loads model, launch, on-orbit, and abort landing case

The center of gravity of the load is the center of gravity of the bolt pattern (cgbolt) for the 8 bolt configuration in the clevis flange and was calculated on page 5.11.6.1-4. The load vector, rload, is the position vector measured from the center of gravity of the bolt pattern to the point of application of the forces and moments which determine the shear and bearing loads.

Element Identification $\quad ID_j := data_{j,1}$

Load Case Number $\quad LC_j := data_{j,2}$

Axial Load $\quad Fx_j := data_{j,3} \cdot lbf$

Shear in Y axis $\quad Fy_j := data_{j,4} \cdot lbf$

Shear in Z axis $\quad Fz_j := data_{j,5} \cdot lbf$

Torsion $\quad Mx_j := data_{j,6} \cdot in \cdot lbf$

Moment about Y axis $\quad My_j := data_{j,7} \cdot in \cdot lbf$

Moment about Z axis $\quad Mz_j := data_{j,8} \cdot in \cdot lbf$

Rotation of Coordinate System of Loads For Alignment With Coordinate System at Fastener Centerline

The loads are recovered in the global coordinate system at the cg of the bolt pattern (see section 5.11.6.1-4). The forces and moments are transformed to the local coordinate system at the centerline of the fasteners by a 180 degree ccw rotation about the global Z axis.

$\beta := 180 \cdot deg$ $\quad$ $Ftransform := \begin{pmatrix} \cos(\beta) & -\sin(\beta) & 0 \\ \sin(\beta) & \cos(\beta) & 0 \\ 0 & 0 & 1 \end{pmatrix}$ $\quad$ $Ftransform = \begin{pmatrix} -1.000 & 0.000 & 0.000 \\ 0.000 & -1.000 & 0.000 \\ 0.000 & 0.000 & 1.000 \end{pmatrix}$

$Flocal := (augment(Fx, Fy, Fz)) \cdot Ftransform$

$Fx := Flocal^{\langle 1 \rangle}$ $\quad$ $Fy := Flocal^{\langle 2 \rangle}$ $\quad$ $Fz := Flocal^{\langle 3 \rangle}$

$Mlocal := (augment(Mx, My, Mz)) \cdot Ftransform$

$Mx := Mlocal^{\langle 1 \rangle}$ $\quad$ $My := Mlocal^{\langle 2 \rangle}$ $\quad$ $Mz := Mlocal^{\langle 3 \rangle}$

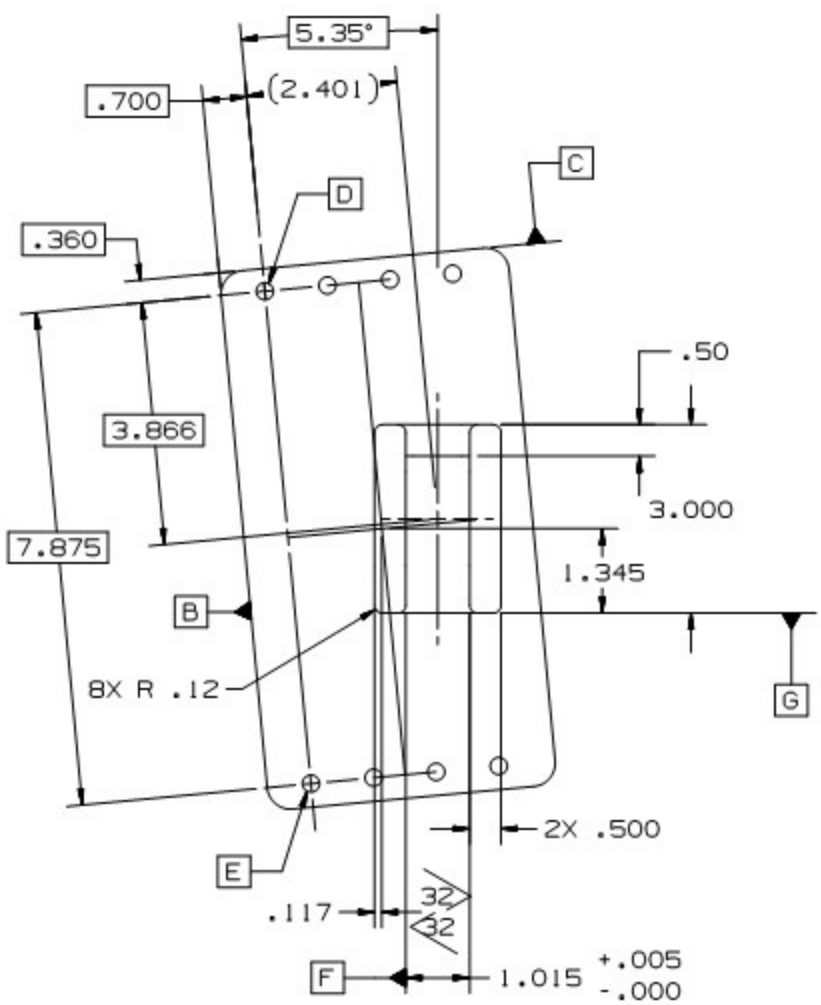

Fig. 6 Location of the Centroid of the Fastener Group

Relationship of Centroid of Cross Sections to Centroid of Bolt Pattern (clevis flange not shown for clarity and dimensions shown are at clevis flange)

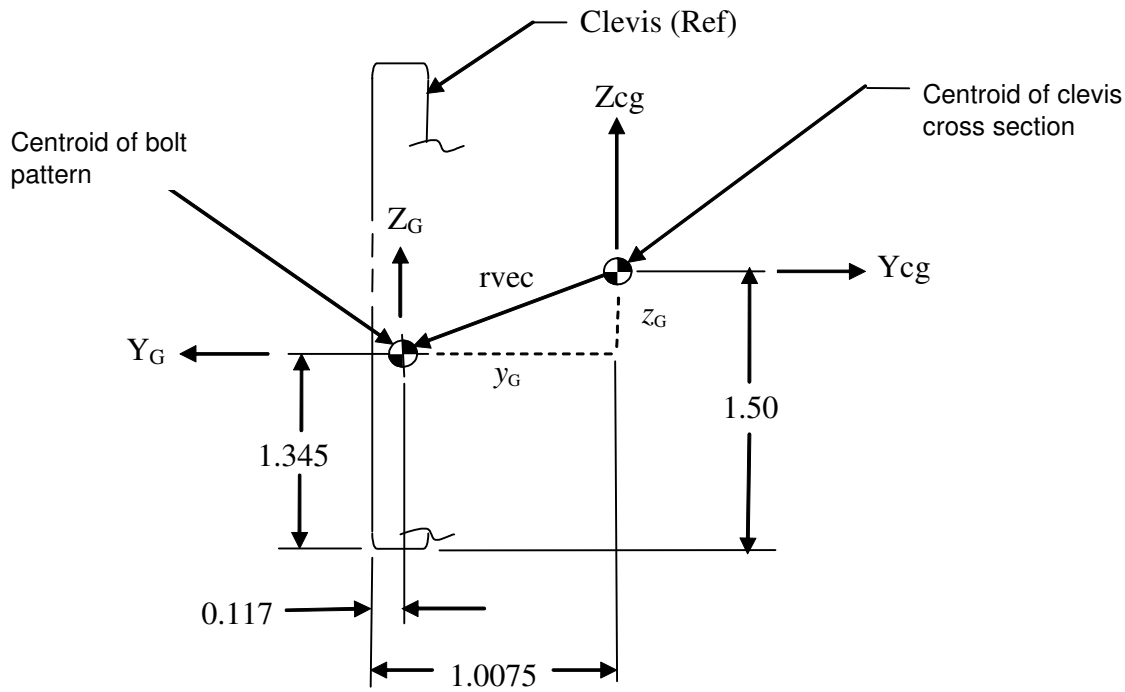

Fig. 7 cg of bolt pattern located 0.117 in. right and 1.345 in. above the lower left corner of the clevis.

Moment Distribution

Vector from Centerline of fasteners to centroid of bolt pattern at clevis flange:

Centroid of lug in local coordinate system: $cglug := \begin{pmatrix} -9.069 \\ -.8905 \\ -.155 \end{pmatrix} \cdot in$

Centroid of bolt pattern: $r_{cs} := \begin{pmatrix} 0 \\ 0 \\ 0 \end{pmatrix} \cdot in$

$rload := cglug - r_{cs}$

$$rload = \begin{pmatrix} -9.069 \\ -0.8905 \\ -0.155 \end{pmatrix} \cdot in$$

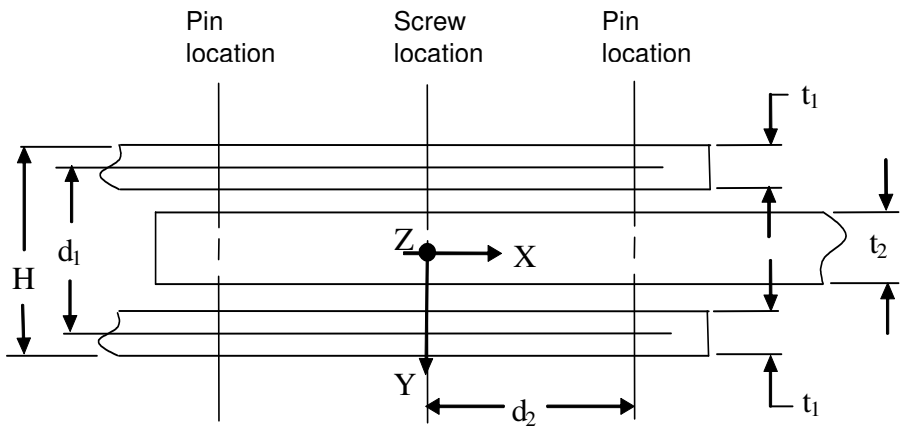

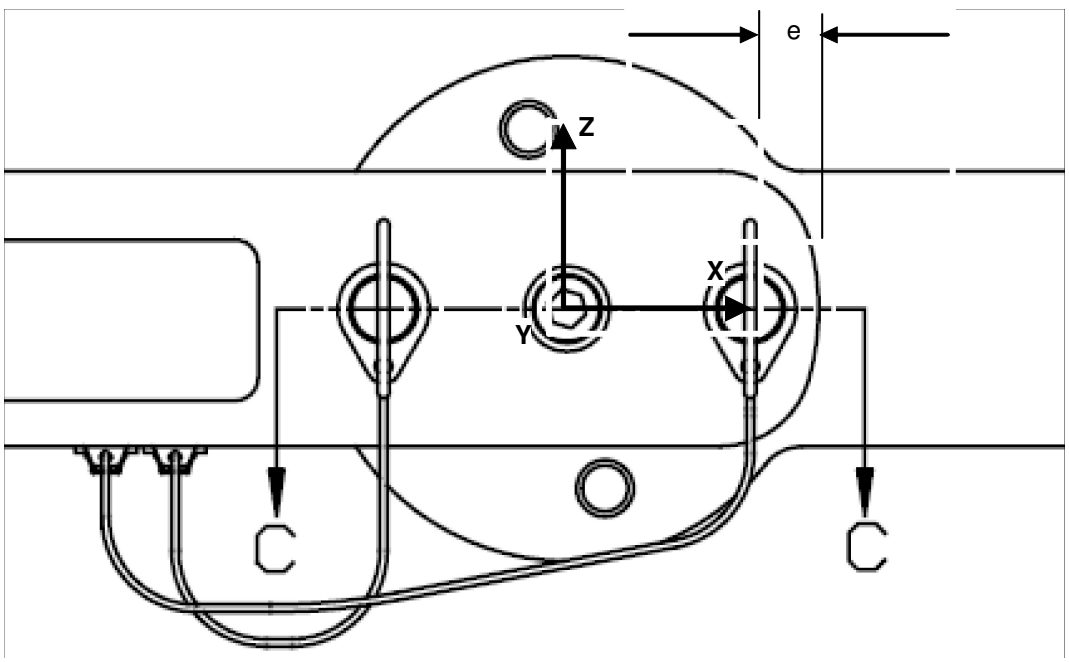

Fig. 8, Clevis Lug Pin and Screw Locations

$$M_{tot}^{\langle j \rangle} := \begin{pmatrix} Mx_j \\ My_j \\ Mz_j \end{pmatrix} + rload \times \begin{pmatrix} Fx_j \\ Fy_j \\ Fz_j \end{pmatrix}$$

Use the cross-product to determine the additional moments acting on the cap screw and pins.

$Mx_bolt_j := M_{tot_{1,j}}$ $\quad$ $My_bolt_j := M_{tot_{2,j}}$ $\quad$ $Mz_bolt_j := M_{tot_{3,j}}$

$Mx_max := \max\left(\overrightarrow{|Mx_bolt|}\right)$ $\quad My_max := \max\left(\overrightarrow{|My_bolt|}\right)$ $\quad Mz_max := \max\left(\overrightarrow{|Mz_bolt|}\right)$

$Mx_max = 396.893 \cdot in \cdot lbf$ $\quad My_max = 3174 \cdot in \cdot lbf$ $\quad Mz_max = 1042.452 \cdot in \cdot lbf$

$Fx_max := \max\left(\overrightarrow{|Fx|}\right)$ $\quad Fy_max := \max\left(\overrightarrow{|Fy|}\right)$ $\quad Fz_max := \max\left(\overrightarrow{|Fz|}\right)$

$Fx_max = 332.048\,lbf$ $\quad Fy_max = 164.014\,lbf$ $\quad Fz_max = 551.520\,lbf$

Shape Ratios:

Lug hole diameter: $D_{lug} = 0.525 \cdot in$ Bearing Area: $A_{br} := D_{lug} \cdot t_2$ $\quad A_{br} = 0.517 \cdot in^2$

$\frac{e_{lug}}{D_{lug}} = 1.430$ $\quad H := 2.015 \cdot in$ $\quad d_1 := 1.515 \cdot in$ $\quad d_2 := 2.00 \cdot in$

Shear in the pins and the screw is produced by Fx, Fz, Mx, My, and Mz and the maximum loads are used conservatively.

$P_{x1} := \frac{Mz_max}{d_1}$ $\quad P_x := \left(\frac{Fx_max}{2}\right) + P_{x1}$ $\quad P_x = 854.111 \cdot lbf$

$P_{z1} := \frac{Mx_max}{d_1}$ $\quad P_{z2} := \frac{My_max}{2 \cdot d_2}$ $\quad P_z := P_{z1} + P_{z2} + \left(\frac{Fz_max}{2}\right)$ $\quad P_z = 1331.328 \cdot lbf$

Distribution of the shearing force based on single shear strength of screw and pin:

$Psu_pin := \frac{28622}{2} \cdot lbf$ $\quad Psu_pin = 14311 \cdot lbf$ $\quad Psu_screw := 25600 \cdot lbf$

$sum_Psu := 2 \cdot Psu_pin + Psu_screw$ Sum of the allowables for 2 pins and 1 screw

$px_pin := \frac{P_x \cdot Psu_pin}{sum_Psu}$ $\quad px_screw := \frac{P_x \cdot Psu_screw}{sum_Psu}$

$px_pin = 225.428 \cdot lbf$ $\quad px_screw = 403.254 \cdot lbf$

$pz_pin := \frac{P_z \cdot Psu_pin}{sum_Psu}$ $\quad pz_screw := \frac{P_z \cdot Psu_screw}{sum_Psu}$

$pz_pin = 351.382 \cdot lbf$ $\qquad$ $pz_screw = 628.564 \cdot lbf$

Shear Tearout Analysis of Clevis

Clevis dimensions:

Clevis thickness: $t_1 := 0.500 \cdot in$

Clevis edge distance: $e := .751 \cdot in$

Maximum lug hole diameter: $D_{lug} = 0.525 \cdot in$ $\qquad$ $u := 40 \cdot deg$

Shear Tear-out area: $A_{s1} := 2 \cdot \left(e - \frac{D_{lug}}{2} \cdot \cos(u) \right) \cdot t_1$

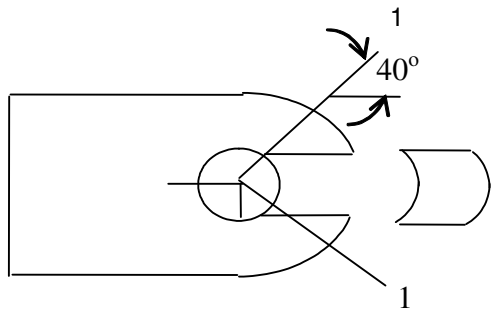

Allowable shear stress of clevis (7050-T7451):

$F_{su} = 40850.000\,psi$ (Ref: page 5.11.6.3-6)

$P_{u1} := F_{su} \cdot A_{s1}$ $\qquad$ $P_{u1} = 22464 \cdot lbf$

(Ref: Bruhn, fig. D1.9, page D1.5)

$MS1_{tearout} := \frac{P_{u1}}{SFu \cdot FF \cdot P_x} - 1$ $\qquad$ $MS1_{tearout} = 10.435$

Shear Tearout Analysis of Center Lug

Allowable shear stress of center lug (7075-T7351)

$F_{su} = 40850.000\,psi$

$A_{s2} := 2 \cdot \left(e - \frac{D_{lug}}{2} \cdot \cos(u) \right) \cdot t_2$

$P_{u2} := F_{su} \cdot A_{s2}$ $\qquad$ $P_{u2} = 44254 \cdot lbf$ $\qquad$ $Ps2 := \frac{(Fx_max + P_{x1}) \cdot Psu_pin}{sum_Psu}$

$MS2_{tearout} := \frac{P_{u2}}{SFu \cdot FF\,Ps2} - 1$

$MS2_{tearout} = 70.462$

PDA Mounting Bracket Assembly Lug Analysis

$\frac{e_{lug}}{D_{lug}} = 1.430$ $\frac{D_{lug}}{t_2} = 0.533$ Parameters for determining Kbr

$K_{br} := 1.4$ (Ref: Astronautics Structures Manual, Vol. 1, p. 221, Fig. B 2.1.0-3, extrapolated value)

$P_{bru} := K_{br} \cdot Ftu \cdot A_{br}$ $P_{bru} = 48506 \cdot lbf$ (Ultimate Bearing Load)

Width of Equivalent lug: $W_{eq} := 1.5 \cdot in$ (Ref: The equivalent lug width is based on "W" in Astronautics Structures Manual, Vol. 1, p. 221 Fig. B 2.1.0-4)

$\frac{W_{eq}}{D_{lug}} = 2.857$ Parameter for determining Kt

$K_t := 0.81$ (Ref: Astronautics Structures Manual, Vol. 1, p. 223, Fig. B 2.1.0-4, Curve 4)

$A_t := (W_{eq} - D_{lug}) t_2$ $P_{tu} := K_t \cdot Ftu \cdot A_t$ $P_{tu} = 52120 \cdot lbf$ (Ultimate Tensile load)

$\frac{e_{lug}}{D_{lug}} = 1.430$ Parameter for determining Kbry

$K_{bry} := 1.4$ (Ref: Astronautics Structures Manual, p. 226, Vol. 1, Fig. B 2.1.0-5)

$P_{bry} := K_{bry} \cdot A_{br} \cdot F_{ty}$ $P_{bry} = 40441 \cdot lbf$ (Yield Bearing Load)

Compute Ultimate and Yield Load Ratios (actual/allowable)

Use the smaller of Ptu and Pbru for ultimate: $P_{axial} := \frac{(Fx_max + P_{x1}) \cdot Psu_screw}{sum_Psu}$ $P_{axial} = 481.639 \cdot lbf$

$$R_{bru} := \begin{cases} \frac{SFu \cdot P_{axial}}{P_{tu}} & \text{if } P_{tu} < P_{bru} \\ \frac{SFu \cdot P_{axial}}{P_{tu}} & \text{otherwise} \end{cases}$$

$R_{bru} = 0.018$

$$R_{bry} := \frac{SFy \cdot P_{axial}}{P_{bry}} \qquad R_{bry} = 0.015$$

Calculate Allowable Loads (Transverse Load Component):

Calculate lug section areas (Ref: Aeronautics Structures Manual Fig. B 2.2.0-2)

$$W_{eq2} := 3.00 \cdot in$$

$$A_1 := t_2 \cdot \left(\frac{W_{eq2} - D_{lug} \cdot \cos(45 \cdot deg)}{2} \right) \qquad A_2 := t_2 \cdot \frac{W_{eq2} - D_{lug}}{2} \qquad A_3 := t_2 \cdot \left(e_{lug} - \frac{D_{lug}}{2} \right) \qquad A_4 := A_1$$

$$A_1 = 1.295 \cdot in^2 \qquad A_2 = 1.219 \cdot in^2 \qquad A_3 = 0.481 \cdot in^2 \qquad A_4 = 1.295 \cdot in^2$$

Calculate the weighted average:

$$A_{av} := \frac{6}{\left(\frac{3}{A_1}\right) + \left(\frac{1}{A_2}\right) + \left(\frac{1}{A_3}\right) + \left(\frac{1}{A_4}\right)} \qquad A_{av} = 1.002 \cdot in^2$$

Bearing area is: $A_{br} = 0.517 \cdot in^2$ Ref: Page 5.11.6.3-10

Shape Parameter: $\frac{A_{av}}{A_{br}} = 1.938$

Ultimate and yield transverse bearing load parameters are:

$K_{tbru} := 0.35$ $K_{tbry} := 1.3$ (Reference: NASA Astronautics Structures Manual, Vol. 1, Section B 2, p.21, Fig. B 2.2.0-4 Curve 10.)

$$P_{tbru} := K_{tbru} \cdot F_{tu} \cdot A_{br}$$

$P_{tbru} = 11520 \cdot lbf$ (Ultimate transverse bearing load)

$P_{tbry} := K_{tbry} \cdot F_{ty} \cdot A_{br}$ $P_{tbry} = 37553 \cdot lbf$ (Yield transverse bearing load)

Compute Ultimate and Yield Load Ratios

$$P_{transverse} := \frac{(Fz_max + P_{z1} + P_{z2}) \cdot Psu_screw}{sum_Psu} \qquad P_{transverse} = 758.76 \cdot lbf$$

Ultimate:

$$R_{tbru} := \frac{SFu \cdot P_{transverse}}{P_{tbru}} \qquad R_{tbru} = 0.132$$

$$R_{tbry} := \frac{SFy \cdot P_{transverse}}{P_{tbry}} \qquad R_{tbry} = 0.025$$

Calculate Combined Margins of Safety: (Reference: Astronautics Structures Manual, Section B2.3.0)

$$MS_ult := \frac{1}{\left(R_{bru}^{1.6} + R_{tbru}^{1.6}\right)^{.625}} - 1 \qquad MS_yld := \frac{1}{\left(R_{bry}^{1.6} + R_{tbry}^{1.6}\right)^{.625}} - 1$$

$MS_ult = 6.394$ **...Margin of Safety on Combined Ultimate**

$MS_yld = 30.673$ **...Margin of Safety on Combined Yield**

Shear and Bending Strength of Center Cap Screw, NAS1351N8-44

The center cap screw is made of heat-resistant steel. The cap screw is in double shear. From the National Aerospace Standard, single shear strength of 0.500 inch diameter heat resistant steel bolt is 25600 lb.

$P_{su} := 25600 \cdot lbf$ Single shear allowable (Ref: NAS 1351)

The axial load is in the X - direction: $px_screw = 403.254 \cdot lbf$

The transverse load is in the z direction: $pz_screw = 629 \cdot lbf$

Maximum load: $P_resultant := \sqrt{px_screw^2 + pz_screw^2}$ $\qquad P_resultant = 746.797 \cdot lbf$

Maximum Cap Screw Bending Moment

Gap:

Depth of lugs: $dlug := 2.015 \cdot in$ $\quad g_p := \frac{dlug - 2 \cdot t_1 - t_2}{2}$ $\quad g_p = 0.015 \cdot in$

Moment arm (Ref: Astronautics Structures Manual, Vol. 1, Section B 2.1.0):

Reference values: $e = 0.751 \cdot in$ $\quad D_{lug} = 0.525 \cdot in$ $\quad P_{tu} = 52119.551 \cdot lbf$ $\quad P_{bru} = 48506.325 \cdot lbf$

$$r := \left[\left(\frac{e}{D_{lug}}\right) - \frac{1}{2}\right] \cdot \frac{D_{lug}}{t_2} \qquad r = 0.496$$

$$Pu_{min} := \begin{cases} \frac{P_{tu}}{A_{br} \cdot F_{tu}} & \text{if } P_{tu} < P_{bru} \\ \frac{P_{bru}}{A_{br} \cdot F_{tu}} & \text{otherwise} \end{cases}$$

$Pu_{min} = 1.474$

$:= 0.72$ Ref: Astronautics Structures Manual, Vol. 1, Fig. B 2.1.0-6:

The bending moment arm, b, on the center pin is obtained from Astronautic Structures Manual, Vol. 1, Section B 2.1.0, page 220:

$$b := \left(\frac{t_1}{2}\right) + g_p + \cdot \frac{t_2}{4} \qquad b = 0.442 \cdot in$$

Cap screw bending moment: $Mscrew := .5 \cdot P_resultant \cdot b$ $\quad Mscrew = 165.154 \cdot in \cdot lbf$

Section Properties

Minimum cross section of the cap screw is a circle of diameter, dmin:

$$Area := \frac{= \cdot d_{min}^2}{4} \qquad Area = 0.190 \cdot in^2$$

Distance from centroid to outer fiber: $zc := \frac{d_{min}}{2}$ $zc = 0.246 \cdot in$

Moments of inertia about centroid: $I_y := \left(\frac{=}{64}\right) \cdot d_{min}^{4}$ $I_y = 0.003 \cdot in^4$

Stresses on cross section:

Bending stress: $y_b := Mscrew \cdot \frac{zc}{I_y}$ $y_b = 14134 \cdot psi$

Find Modulus of Rupture of screw to check bending

Assume D/t = 2 for a solid pin:

Material properties of Cap Screw:

Temperature correction factor: $cpin := 0.98$ (Ref. MMPDS)

$Ftu_capscrew := 160000 \cdot cpin \cdot psi$ $Ftu_capscrew = 156800 \cdot psi$

$Frup := 260000 \cdot cpin \cdot psi$ (Ref: Bruhn, C4.16, figure C4.11)

$Frup = 254800 \cdot psi$

Margins of Safety:

Bending Stress: $MS_{bnd} := \frac{Frup}{SFu \cdot y_b} - 1$ $MS_{bnd} = 8.014$

Shear stress: $, := \frac{4P_resultant}{3 \cdot Area}$ (Ref: Bruhn, p. A14.4, table A14.2)

$, = 5240 \cdot psi$

$Fsu_capscrew := 0.6 \cdot Ftu_capscrew$

$Fsu_capscrew = 94080 \cdot psi$

Margins of Safety:

Margin of Safety: $MS_{shr} := \frac{Fsu_capscrew}{SFu \cdot ,} - 1$

$MS_{shr} = 7.978$

Shear and Bending Strength of Double Acting Space Pin, 56789R8-15DL10C6

The center spacepin is made of steel. The pin is in double shear.

$P_{su} := 28622 \cdot lbf$ Double shear allowable (Ref: Avibank Mfg., Inc. Drawing no. 56789)

The axial load is in the X - direction: $px_pin = 225.428 \cdot lbf$

The transverse load is in the z direction: $pz_pin = 351 \cdot lbf$

Maximum load: $P_resultant2 := \sqrt{px_pin^2 + pz_pin^2}$ $P_resultant2 = 417.477 \cdot lbf$

Maximum Pin Bending Moment

Gap:

Depth of lugs: $dlug := 2.015 \cdot in$ $g_p := \frac{dlug - 2 \cdot t_1 - t_2}{2}$ $g_p = 0.015 \cdot in$

Moment arm (Ref: Astronautics Structures Manual, Vol. 1, Section B 2.1.0):

Reference values: $e = 0.751 \cdot in$ $dpinhole := 0.510 \cdot in$ $P_{tu} = 52119.551 \cdot lbf$ $P_{bru} = 48506.325 \cdot lbf$

$r2 := \left[\left(\frac{e}{dpinhole}\right) - \frac{1}{2}\right] \cdot \frac{dpinhole}{t_2}$ $r2 = 0.504$ $A_{br2} := dpinhole \cdot t_2$

$$Pu_{min} := \begin{cases} \frac{P_{tu}}{A_{br2} \cdot F_{tu}} & \text{if } P_{tu} < P_{bru} \\ \frac{P_{bru}}{A_{br2} \cdot F_{tu}} & \text{otherwise} \end{cases}$$

$Pu_{min} = 1.517$ $_2 := 0.74$

The bending moment arm, b, on the center pin is obtained from Astronautic Structures Manual, Vol. 1, Section B 2.1.0, page 220:

$b2 := \left(\frac{t_1}{2}\right) + g_p + 2 \cdot \frac{t_2}{4}$ $\quad b2 = 0.447 \cdot in$

Pin bending moment: $Mpin := .5 \cdot P_resultant2 \cdot b2$ $\quad Mpin = 93.353 \cdot in \cdot lbf$

Section Properties

Minimum cross section of the pin is a circle of diameter, d2min:

$d2_{min} := 0.4970 \cdot in$

$Area2 := \frac{= \cdot d2_{min}^2}{4}$ $\quad Area2 = 0.194 \cdot in^2$

Distance from centroid to outer fiber: $zc2 := \frac{d2_{min}}{2}$ $\quad zc2 = 0.248 \cdot in$

Moments of inertia about centroid: $I2_y := \left(\frac{=}{64}\right) \cdot d2_{min}^4$ $\quad I2_y = 0.003 \cdot in^4$

Stresses on cross section:

Bending stress: $y2_b := Mscrew \cdot \frac{zc2}{I2_y}$ $\quad y2_b = 13703 \cdot psi$

Find Modulus of Rupture of pin to check bending

Assume D/t = 2 for a solid pin:

Material properties of Pin:

Temperature correction factor: $cpin := 0.98$ (Ref. MMPDS)

$P_{su} = 28622 \cdot lbf$ (Double shear allowable, reference: Avibank Mfg., Inc. drawing no. 56789)

$P_{sus} := \frac{P_{su}}{2}$ (Single shear allowable)

$F_{supin} := \frac{P_{sus}}{Area2}$ $\quad F_{supin} = 73768 \cdot psi$ Allowable Shear Stress

$F_{tupin} := cpin \cdot \frac{F_{supin}}{0.6}$

$F_{tupin} = 120488 \cdot psi$ Allowable Tensile Stress

$Frup2 := 190000 \cdot cpin \cdot psi$ (Ref: Bruhn, C4.16, figure C4.11) $Frup2 = 186200 \cdot psi$

Margins of Safety:

Bending Stress $MS2_{bnd} := \frac{Frup2}{SFu \cdot y2_b} - 1$ $MS2_{bnd} = 5.794$

Shear stress $, pin := \frac{4P_resultant2}{3 \cdot Area2}$ (Ref: Bruhn, p. A14.4, table A14.2)

$, pin = 2869 \cdot psi$

$MS2_{shr} := \frac{F_{supin}}{, pin} - 1$

$MS2_{shr} = 24.710$

Bushing Yield Strength

Material Properties of ROEU Assembly Bushing, SDG39137680, AL Bronze, AMS 4640 (Ref: AMS Analysis Files, Appendix C8, "Material Properties for Aluminum Bronze.")

Tensile allowable, ultimate: $F_{tub} := 105000 \cdot psi$ $F_{brub1} := 115000 \cdot psi$

Yield: $F_{tyb} := 65000 \cdot psi$

Ultimate and Yield Thermal Degradation Factors: (Ref: AMS Analysis Files, Appendix C8, "Material Properties for Aluminum Bronze.")

$T_{cub} := 0.98$ $T_{cyb} := 1.00$ (Ref: AMS Analysis Files, Appendix C8, "Material Properties for Aluminum Bronze," email communication between ESCG Structural Analysis Section and ESCG Material Analysis Section)

$F_{ty} := T_{cyb} \cdot F_{tyb}$ $F_{ty} = 65000 \cdot psi$

$F_{brub} := T_{cub} \cdot F_{brub1}$ $F_{brub} = 112700 \cdot psi$

Failure by Bearing of Bushing on Lug

$D_p := 1.248 \cdot in$ $A_{brb} := D_p \cdot t_2$

$P_{bryb} := 1.85 \cdot F_{ty} \cdot A_{brb}$ $P_{bryb} = 147821 \cdot lbf$

$$MS_3 := \frac{P_{bryb}}{|P_resultant|} - 1 \qquad MS_3 = 196.940$$

Failure by Bearing of Bolt on Bushing

Bolt diameter: $d_{min} = 0.492 \cdot in$

$$P_{ubsh} := F_{brub} \cdot d_{min} \cdot t_2$$

$$MS_4 := \frac{P_{ubsh}}{P_resultant} - 1 \qquad MS_4 = 72.120$$

5.11.6.4 ROEU Assembly Harness Bracket and Bolt Analysis

Section 5.11.6.4 ROEU Assembly Harness Bracket and Bolt Analysis
Part no.: SDG39135865-001

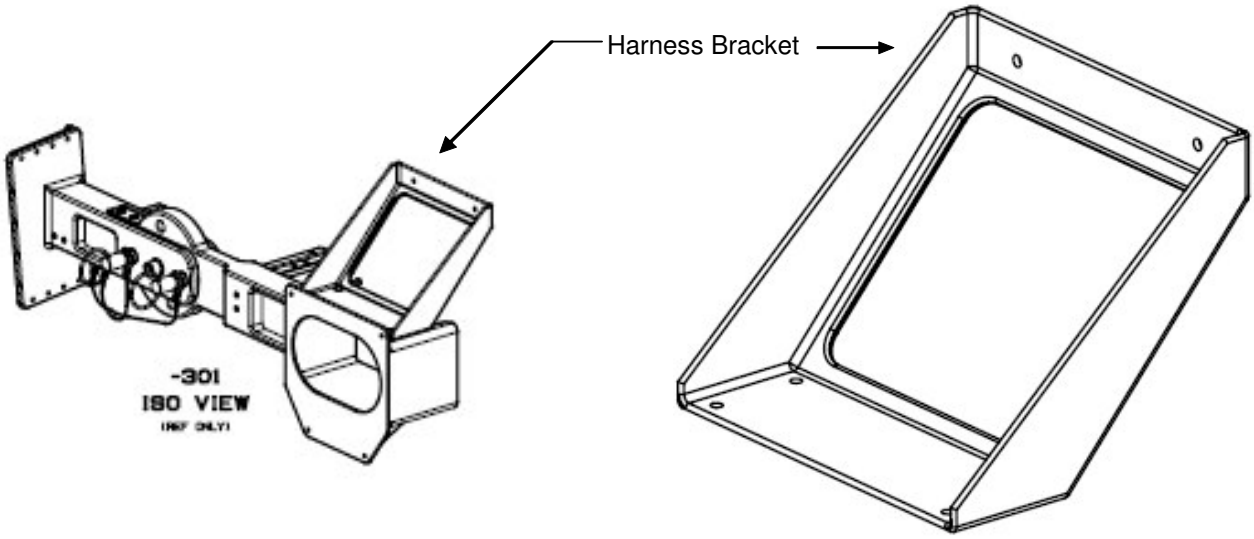

INTRODUCTION:

The harness bracket supports the cables attached to the PDA mounting bracket assembly. It is attached to the PDA mounting bracket by four bolts. An analysis of these bolts follows.

LOADS:

The bracket serving as a support for the cable harness transmits a 125 lb kick load to the PDA mounting bracket through four bolts.

ANALYSIS METHOD:

The bearing stress between the bolt and the harness bracket and the shear stress in the bolts are determined.

FACTORS OF SAFETY:

The factors of safety utilized are 2.0 for ultimate and 1.25 for yield. The temperature exposure range is 40 degrees F. to 120 degrees F.

Material Properties of Harness Bracket, SDG39135865-001, 7050-T7451 8.75 x 7.50 x3.00 BMS-7-323C

(Ref: MMPDS-03) Table 3.7.4.0(b1)) 7050 AMS 4050, Plate T7451,2-3in, A)

Tensile Ultimate ST: $Ftu := 68000 \cdot psi$

Tensile Yield ST: $Fty := 59000 \cdot psi$

Shear Ultimate: $Fsu := 43000 \cdot psi$

edge distance: $e_{hole} := 0.38 \cdot in$

hole diameter: $d_{hole} := .213 \cdot in$

Bearing allowables

$$ed := \frac{e_{hole}}{d_{hole}} \cdot in \qquad ed = 1.784\,in$$

Ultimate, e/d: $ed1 := 1.5 \cdot in$ $\quad Fbru_1 := 108000 \cdot psi$ $\quad$ Yield e/d = 1.5 $\quad Fbry_1 := 89000 \cdot psi$

Ultimate, e/d: $ed2 := 2.0 \cdot in$ $\quad Fbru_2 := 141000 \cdot psi$ $\quad$ Yield e/d = 2.0 $\quad Fbry_2 := 104000 \cdot psi$

$$Fbru := Fbru_1 + \frac{(Fbru_2 - Fbru_1) \cdot (ed - ed1)}{ed2 - ed1} \qquad Fbru = 126746\,psi$$

$$Fbry := Fbry_1 + \frac{(Fbry_2 - Fbry_1) \cdot (ed - ed1)}{ed2 - ed1} \qquad Fbry = 97521\,psi$$

Factors of Safety AMS-02 Launch and Abort Landing Factors of Safety

Ultimate $SFu := 2.0$

Fitting factor $FF := 1.15$

Yield $SFy := 1.25$

Temperature data (Ref: AMS-02 Launch and Abort Landing Temperatures)

Assembly $Temp_initial := 70 \cdot deg$

Maximum $Temp_max := 120 \cdot deg$

Minimum $Temp_min := 40 \cdot deg$

Ultimate and Yield Thermal Degradation Factors: (Ref. MMPDS, figs. 3.7.4.2.1).

$TSu := 0.95$ $\quad TSy := 0.98$ $\quad F_{tu} := TSu \cdot Ftu$ $\quad F_{ty} := TSy \cdot Fty$

$F_{brut} := TSu \cdot Fbru$ $\quad F_{bryt} := TSy \cdot Fbry$ $\quad F_{tu} = 64600\,psi$ $\quad F_{ty} = 57820\,psi$

$F_{brut} = 120409\,psi$ $\quad F_{bryt} = 95571\,psi$

Bearing stress between bolt and bracket:

$$\beta_{brng} := \frac{125 \cdot lbf}{.12 \cdot in \cdot (.190 \cdot in)} \qquad \beta_{brng} = 5482\,psi$$

$$MS_{brng} := \frac{F_{brut}}{SFu \cdot \beta_{brng}} - 1 \qquad MS_{brng} = 9.981$$

Prepared By	Name Victor Holloman	Date 04/13/07	Engineering and Science Contract Group *Structural Analysis Section*	File Name Harness_bracket.mcd
Checked By	C. Bala			Drawing No. SDG39135865
Title	ROEU Assembly Harness Bracket And Bolt Analysis			

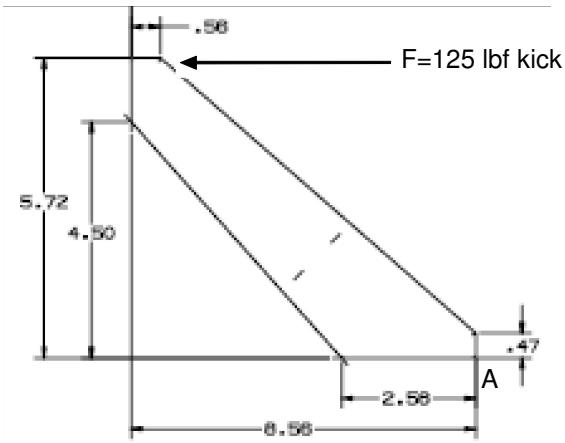

F=125 lbf kick load (direction indicated yields most conservative result)

Taking moments about A: $M := (5.72 \cdot in) \cdot (125 \cdot lbf)$ $M = 715\, in \cdot lbf$ $H := 1.75 \cdot in$ (fastener spacing)

$F_T := \frac{M}{H}$ $F_T = 409\, lbf$ (Tension load) $V := 125 \cdot lbf$ (Shear load)

Load is distributed among four fasteners. Assume the entire load is carried by one fastener. This also covers the failsafe analysis.

CHECK BOLTS (NAS1351N3, 0.190-32, 0.625L, Material A-286), Nut NAS1291C3M, Washer NAS1149E 0463R

Flange 1 := "Harness Bracket"
Part number: SDG39135865
Material: AL 7050-T7451, BMS-7-323C (AMS 4050), 8.75 x 7.50 x 3.00

Flange 2 := "PDA Mounting Bracket"
Part number:SDG39137678-001
Material: AL 7050-T7451 BMS-7-323C (AMS 4050), 25.587 x 7.83 x 4.56

Loads

Applied tensile load $P := 409 lbf$

Applied shear load $V := 125 lbf$

Applied bending moment $M := 0 in \cdot lbf$

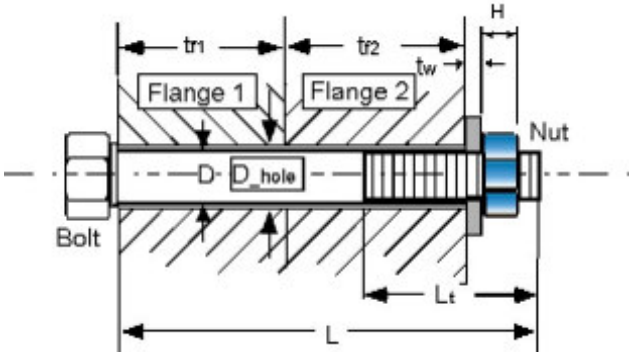

Prepared By	Name	Date		File Name
	Victor Holloman	04/13/07		Harness_bracket.mcd
Checked By	C. Bala		**Engineering and Science Contract Group** *Structural Analysis Section*	Draw ing No. SDG39135865
Title	ROEU Assembly Harness Bracket And Bolt Analysis			

Factors of Safety

Ultimate $SFu := 2.0$ Yield $SFy := 1.25$

Joint Separation $SFsep := 1.2$ Fitting factor $FF := 1.15$

Temperature data

Assembly $Temp_initial := 70 \cdot deg$

Maximum $Temp_max := 120 \cdot deg$

Minimum $Temp_min := 40 \cdot deg$

Bolt and Nut Data

Nominal diameter of bolt $D := 0.190 \cdot in$

Number of threads/inch $Nt := 32 \cdot \frac{1}{in}$

Total length of bolt $L := 0.625 \cdot in$

Height of nut $H := 0.154 \cdot in$

Threaded length $Lt := 0.625 \cdot in$

(If bolt is fully threaded, input Lt = L)

This file uses the calculations shown in \\escfil02\2i11_mathcad\8307_bolts\thread_data.mcd

Tue Feb 15 10:54:02 AM 2005

Washer Data

Thickness of washers $tw := 0.032 \cdot in$

Outer Diameter of washer $Dw := 0.438in$

Inner Diameter of washer $Dwi := 0.203 \cdot in$

Bolt head dia. across flats $dw := 0.3120 \cdot in$ (used only if there is no washer)

Note: If there is no washer tw, Dw and Dwi should be zero

Flange Data

Thickness of flange 1 $tf1 := 0.12 \cdot in$

Thickness of flange 2 $tf2 := 0.12in$

Diameter of hole $D_hole := 0.213 \cdot in$

Bolt Material Property Data

Temperature correction factor for bolt strength ultimate. $TSu_bolt := 0.98$ Yield $TSy_bolt := 0.98$

Bolt ultimate tensile allowable stress $Ftu_bolt := 160000 \cdot psi$

Bolt ultimate shear allowable stress $Fsu_bolt := 0.6 \cdot Ftu_bolt$

Bolt yield Tensile allowable stress $Fty_bolt := 120000 \cdot psi$

Temperature correction factor for bolt modulus $TE_bolt := 0.94$

Modulus of elasticity of bolt $E_bolt := \left(29.1 \cdot 10^{6} \cdot psi\right)$ Thermal coefficient for bolt $u_bolt_hot := 9.1 \cdot 10^{-6} \cdot \frac{\frac{in}{in}}{deg}$

Nut Material Property Data

Temperature correction factor for nut strength $TS_nut := 0.98$ $u_bolt_cold := 8.9 \cdot 10^{-6} \cdot \frac{\frac{in}{in}}{deg}$

Ultimate tensile allowable stress $Ftu_nut := 160000 \cdot psi$

Ultimate Shear allowable stress: $Fsu_nut := 0.6 \cdot Ftu_nut$

Ultimate axial strength of nut $Ptu_nut := 2460 \cdot lbf$ (Ref. NAS1291 page 2)

Washer Material Property Data

Temperature correction factor for washer modulus $TE_washer := 0.99$

Modulus of elasticity of washer: $E_washer := \left(29.1 \cdot 10^{6} \cdot psi\right)$

Flanges Material Property Data

Stiffness of the joint depends upon number of members in the grip of the fasteners, Modulus of elasticity of these members, and diameters of the bolt and the washer.

Temperature correction factor for flange 1 $Tf1E := 0.98$ (modulus)

Temperature correction factor for flange 2 $Tf2E := 0.98$

Modulus of elasticity for the parts in the joint $E_flange1 := \left(10.5 \cdot 10^{6} \cdot psi\right)$ $E_flange2 := \left(10.5 \cdot 10^{6} \cdot psi\right)$

Coefficient of thermal expansion for flanges $u_flange1_hot := 12.56 \cdot 10^{-6} \cdot \frac{\frac{in}{in}}{deg}$ $u_flange2_hot := 12.56 \cdot 10^{-6} \cdot \frac{\frac{in}{in}}{deg}$

$u_flange1_cold := 12.1 \cdot 10^{-6} \cdot \frac{\frac{in}{in}}{deg}$ $u_flange2_cold := 12.1 \cdot 10^{-6} \cdot \frac{\frac{in}{in}}{deg}$

Torque/Preload Data

Maximum torque $Tmax := 40.6 \cdot in \cdot lbf$ Loading plane factor $n := 0.5$

Minimum torque $Tmin := 34.5 in \cdot lbf$ Preload Uncertainty $:= 0.25$

Torque coefficient $k := 0.15$

This file uses the calculations shown in \\escfil02\2i11_mathcad\8307_bolts\bolt_stiffness_nut_RevC

Prepared By	Name	Date	Engineering and Science Contract Group	File Name
	Victor Holloman	04/13/07		Harness_bracket.mcd
Checked By	C. Bala		*Structural Analysis Section*	Drawing No. SDG39135865
Title	ROEU Assembly Harness Bracket And Bolt Analysis			

Bolt Load data

Bolt/joint stiffness factor	$= := .244$	Preload due to temperature	$Pthr_pos = 61.9\,lbf$
Max. preload	$PLDmax = 1842.6\,lbf$		$Pthr_neg = -34.4\,lbf$
Min. preload	$PLDmin = 784.5\,lbf$	Uncertainty factor	$= 0.25$
Joint separation load	$Psep = 490.8\,lbf$	Torque coefficient	$k = 0.15$
Max. load on the bolt(ultimate)	$Pb = 1950.5\,lbf$	Loading plane factor	$n = 0.5$
Max. load on the bolt(yield)	$Pby = 1910.1\,lbf$	Thread pullout strength required to develop full strength of bolt	$PAs = 3621.8\,lbf$
Bolt ultimate tensile strength	$PAt = 2410.8\,lbf$	Nut ultimate tensile strength	$Ptu_nut = 2410.8\,lbf$

Length_check = "Bolt length is sufficient"

Summary of Margins for bolt:

Joint separation	$MS_1 = 0.57$	Direct Thread shear Ultimate	$MS_6 = 2.85$
Direct Tension Ultimate	$MS_2 = 1.56$	Total Thread shear Ultimate	$MS_7 = 0.86$
Direct Tension Yield	$MS_3 = 2.85$	Shear Ultimate	$MS_8 = 4.74$
Total Tension Ultimate	$MS_4 = 0.24$	Bending Ultimate	$MS_9 = 10$
Total Tension Yield	$MS_5 = 0.19$	Combined shear, tension and bending ultimate	$MS_{10} = 0.23$

Smallest margin of safety for the bolt, and the failure mode:

$MSbolt := \min(MS)$

$MSbolt = 0.19$ Failure_Mode = "Total Tension Yield"

Mon Feb 14 12:37:28 2005

5.11.7 Intentionally Left Blank

Intentionally Left Blank

5.11.8 Intentionally Left Blank

Intentionally Left Blank

5.11.9 Scuff Plate to Sill Joint Bolt Analysis

Section 5.11.9: Scuff Plate to Sill Joint Bolt Analysis

Margin of Safety

Table 5.11.9-1: Fastener Minimum Margin of Safety Summary

Part / Dwg Number	Part Name / Description	Material & Heat Treatment	Failure Mode	Margin of Safety	Reference Page
NAS1954C5	Fasteners connecting Scuff Plate to Sill Joint	A286	Total Tension Yield	0.1 (y)	5.11.9-6

Table 5.11.9-2: Fail-Safe Fastener Minimum Margin of Safety Summary

Part / Dwg Number	Part Name / Description	Material & Heat Treatment	Failure Mode	Margin of Safety	Reference Page
NAS1954C5	Fasteners connecting Scuff Plate to Sill Joint	A286	Combined Shear Tension Bending Ultimate	0.12 (u)	5.11.9-7

Notes:

1. Factors of Safety are 2.0 for Ultimate and 1.25 for Yield.
2. Load cases are defined in section 5.8. Fastener loads are listed in Appendix A18.
3. u = ultimate; y = yield

Prepared By	Name	Date	Engineering and Science Contract Group	File Name
	G. Reyes	04/16/09		scuffplt_to_silljt.xmcd
Checked By	C. Bala		*Structural Analysis Section*	Drawing No. SGG39137813
Title	Scuff Plate to Sill Joint Bolt Analysis			

CHECK BOLTS (NAS1954C5 0.25"-28 x 0.737" L, Material A286), Insert MS51831CA202L, Washer NAS1587-4C

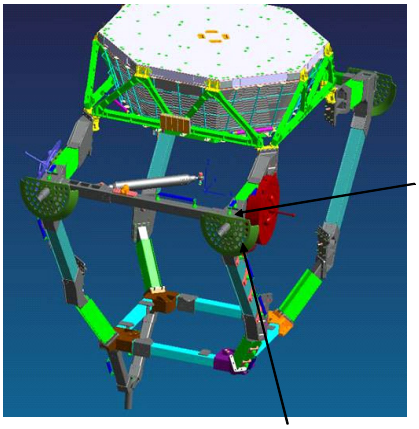

Flange_1 := "Scuff Plate"
Part number: SDG39135867
Material: Al Alloy 7050-T7451

Flange_2 := "Sill Joint"
Part number: SDG39135730
Material: Al Alloy 7050-T7451

Minimum edge distance of flange one: $edge1 := 0.87 \cdot in$

flange two: $edge2 := 0.75 \cdot in$

Loads

Applied tensile load $P := 408.72 lbf$ (Refer to Appendix A18, pg A18-8)

Max absolute FX = 628.97 lbf (Refer to Appendix A18, pg A18-8)
Max absolute Fz = 770.01 lbf (Refer to Appendix A18, pg A18-7)

$$shear := \sqrt{(628.97 \cdot lbf)^2 + (770.01 \cdot lbf)^2} \qquad shear = 994.243\, lbf$$

Applied shear load $V := 994.24 lbf$

Applied bending moment $M := 0 in \cdot lbf$

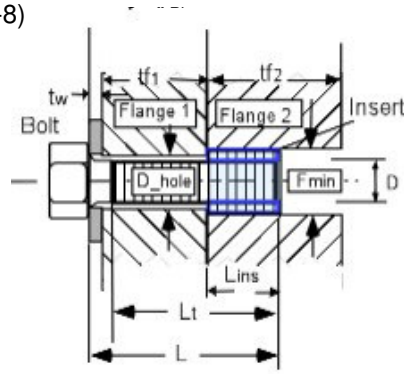

Note: Figure is for reference only.
Not to scale, and actual joint may differ
There may or may not be a washer(s)

Factors of Safety

Ultimate $SFu := 2.0$ Yield $SFy := 1.25$

Fitting factor $FF := 1.15$ Joint Separation $SFsep := 1.2$

Temperature data

Assembly $Temp_initial := 70 \cdot deg$

Maximum $Temp_max := 150 \cdot deg$

Minimum $Temp_min := -47 \cdot deg$

note, these are maximum temperatures that hardware sees / if maximum load occurs at a different temperature this will be conservative

Bolt Data

Nominal diameter of bolt $D := .25 \cdot in$

Number of threads/inch $Nt := 28 \cdot \frac{1}{in}$

Shank diameter of bolt $D_shank := .2485 \cdot in$

Note, if there is a retainer groove in the fastener, this should be the calculated diameter to give an equivalent cross sectional area

Total length of bolt $L := 0.737 \cdot in$

Threaded length $Lt := 0.425 \cdot in$ (If bolt is fully threaded, input Lt = L)

Bolt head dia. across flats $dw := 0.430 \cdot in$ (dia of pressure boss if it exists, otherwise dia of head)

Bolt head height $bh := .125 \cdot in$ (head height is 0 if bolt is flat head)

Thread data lookup table is hidden

Thu Mar 05 14:12:38 2009

This file uses the data shown in \\escfil02\2i11_mathcad\8307_bolts\Rev_E\thread_data.mcd

Temperature correction factor for bolt strength ultimate. $TSu_bolt := 0.98$ Yield $TSy_bolt := 0.98$

Bolt ultimate tensile allowable stress ultimate: $Ftu_bolt := 180000 \cdot psi$ Yield $Fty_bolt := 132353 \cdot psi$

Bolt ultimate shear allowable stress $Fsu_bolt := 0.6 \cdot Ftu_bolt$

Temperature correction factor for bolt modulus $TE_bolt := 0.98$

Modulus of elasticity of bolt $E_bolt := \left(29.1 \cdot 10^{6} \cdot psi\right)$

Thermal coefficients for bolt $\beta_bolt_hot := 9.1 \cdot 10^{-6} \cdot \frac{\frac{in}{in}}{deg}$ $\beta_bolt_cold := 8.6 \cdot 10^{-6} \cdot \frac{\frac{in}{in}}{deg}$

Washer Data

Thickness of washers: $twh := 0.078 \cdot in$ this is total washer thickness, if there are more than one

Diameter of washer under head, Outer: $Dwoh := 0.531in$ Inner: $Dwih := 0.252 \cdot in$

Note: If there are no washer tw's, Dw's and Dwi's should be zero

Modulus of elasticity: $E_washerh := \left(29.1 \cdot 10^{6} \cdot psi\right)$ Temperature correction factor for modulus, $TE_washerh := 0.98$

Insert Data

Length of insert $Lins := 0.375 \cdot in$

Min. external diameter of insert $Fmin := 0.375 \cdot in$

Depth of recess for insert $lr := 0.02 \cdot in$

Temperature correction factor for insert strength $TS_ins := 0.98$

Ultimate tensile allowable stress $Ftu_ins := 140000 \cdot psi$

Ultimate shear allowable stress $Fsu_ins := 0.6 \cdot Ftu_ins$

Prepared By	Name	Date	Engineering and Science Contract Group	File Name
	G. Reyes	04/16/09		scuffplt_to_silljt.xmcd
Checked By	C. Bala		*Structural Analysis Section*	Draw ing No. SGG39137813
Title	Scuff Plate to Sill Joint Bolt Analysis			

Flange data

Stiffness of the joint depends upon number of members in the grip of the fasteners & their material properties,

Thickness of flange 1: $tf1 := 0.266 \cdot in$ flange 2: $tf2 := .375in$ Diameter of thru hole $D_hole := .375 \cdot in$

Modulus of elasticity of these members, with temperature correction factors

Compressive Modulus of elasticity for the parts in the joint $E_flange1 := \left(10.3 \cdot 10^6 \cdot psi\right)$ $E_flange2 := \left(10.3 \cdot 10^6 \cdot psi\right)$

Temperature correction factor (modulus) for flange 1: $Tf1E := 0.98$ flange 2: $Tf2E := 0.98$

Coefficient of thermal expansion for flanges

$$\beta_flange1_hot := 12.7 \cdot 10^{-6} \cdot \frac{\frac{in}{in}}{deg} \qquad \beta_flange2_hot := 12.7 \cdot 10^{-6} \cdot \frac{\frac{in}{in}}{deg}$$

$$\beta_flange1_cold := 12.1 \cdot 10^{-6} \cdot \frac{\frac{in}{in}}{deg} \qquad \beta_flange2_cold := 12.1 \cdot 10^{-6} \cdot \frac{\frac{in}{in}}{deg}$$

Shear strength of flange two, with temperature reduction $Fsu_f2 := 44000 \cdot psi$ $Tf2s := 0.98$

Torque/Preload data

Maximum torque $Tmax := 115 \cdot in \cdot lbf$

Minimum torque $Tmin := 109in \cdot lbf$

Joint is lubed

Preload Uncertainty $u := 0.25$

Torque coefficient $k := 0.15$

Loading plane factor $n := 0.5$

Stiffness and Margin calculations are hidden

Fri Mar 13 14:35:39 2009

This file uses calculations shown in \\escfil02\2i11_mathcad\8307_bolts\Rev_E\bolt_insert_stiffness_RevE.xmcd

Bolt Load data

Bolt/joint stiffness factor $= 0.841$

Max. preload $PLDmax = 3891\,lbf$

Min. preload $PLDmin = 1906\,lbf$

Nom. preload $PLDnom = 3067\,lbf$

Preload to yield ratio(nom.) $PLDratio = 0.657$

Joint separation load $Psep = 490.464\,lbf$

Preload due to temperature $Pthr_pos = 57.9\,lbf$ $Pthr_neg = -82.3\,lbf$

Uncertainty factor $u = 0.25$

Torque coefficient $k = 0.15$

Loading plane factor $n = 0.5$

Bolt Load data (cont.)

Applied Tensile load on the bolt $P = 408.72\,lbf$

Applied shear on the bolt $V = 994.24\,lbf$

Applied bending on the bolt $M = 0\,in \cdot lbf$

Max. load on the bolt with preload and Factor of safety

(ultimate) $Pb = 4286\,lbf$

(yield) $Pby = 4138\,lbf$

Max. load on the bolt with preload without factor of safety $Pbapp = 4089\,lbf$

Bolt ultimate tensile strength $PAt = 6224\,lbf$

Bolt shear strength $VAu = 3446\,lbf$

Bolt thread pullout strength $PAsbolt = 15503\,lbf$

Bolt bending strength $MAu = 173\,in \cdot lbf$

Insert thread pullout strength $PAsinsert = 12058\,lbf$

Flange thread pullout strength $PAsflange = 9474.1\,lbf$

General Checks

length_check = "Bolt length is sufficient and insert fully engaged"

cone_check = "Joint Pressure Cone does not extend past flange"

preload_check = "Nominal preload >= 65% of bolt yield strength"

washer_check = "Washer(s) under head do not extend past flange"

insert_check = "NOTE: Insert extends past flange two--check dimensions"

Summary of Margins for bolt:

Joint separation	$MS_1 = 4.83$	Direct Thread shear Ultimate	$MS_6 = 9.08$
Direct Tension Ultimate	$MS_2 = 5.62$	Total Thread shear Ultimate	$MS_7 = 1.21$
Direct Tension Yield	$MS_3 = 6.79$	Shear Ultimate	$MS_8 = 0.51$
Total Tension Ultimate	$MS_4 = 0.45$	Bending Ultimate	$MS_9 = 100$
Total Tension Yield	$MS_5 = 0.11$	Combined shear, tension and bending ultimate	$MS_{10} = 0.12$

Smallest margin of safety for the bolt, and the failure mode:

MSbolt = 0.11 Failure_Mode = "Total Tension Yield"

Prepared By	Name	Date		File Name
	G. Reyes	04/16/09		scuffplt_to_silljt.xmcd
Checked By	C. Bala		**Engineering and Science Contract Group** *Structural Analysis Section*	Drawing No. SGG39137813
Title	Scuff Plate to Sill Joint Bolt Analysis			

Fail-safe Analysis (Conservatively, the loads were doubled to perform fail-safe analysis)

Fail-safe Loads

Applied tensile load $P_FS := 817.44 \cdot lbf$

Applied shear load $V_FS := 1988.48 \cdot lbf$

Applied bending moment $M_FS := 0 \cdot in \cdot lbf$

Fail-safe Factors of Safety

Ultimate $SFu_FS := 1.0$

Joint Separation $SFsep_FS := 1.0$

Fail Safe Margin calculations are hidden / stiffness & allowable data is not recalculated

Thu Mar 05 14:13:01 2009

This file calculations shown in \\escfil02\2i11_mathcad\8307_bolts\Rev_E\bolt_insert_stiffness_FS_RevE.xmcd

Bolt Fail-safe Load data

Joint separation load $Psep_FS = 817.44\,lbf$

Max. load on the bolt(ultimate) $Pb_FS = 4286.4\,lbf$

Summary of fail-safe Margins for bolt:

Joint separation $MS_FS_1 = 2.5$

Direct Tension Ultimate $MS_FS_2 = 5.62$

Total Tension Ultimate $MS_FS_3 = 0.45$

Direct Thread shear Ultimate $MS_FS_4 = 9.08$

Total Thread shear Ultimate $MS_FS_5 = 1.21$

Shear Ultimate $MS_FS_6 = 0.51$

Bending Ultimate $MS_FS_7 = 10$

Combined shear, tension and bending ultimate $MS_FS_8 = 0.12$

Determination of the smallest fail-safe margin of safety for the bolt, and the failure mode:

$MSbolt_FS = 0.12$ $Failure_Mode_FS = \text{"Combined Shear Tension Bending Ultimate"}$

5.11.10 Intentionally Left Blank

Intentionally Left Blank

5.11.11 Interface Panel A to USS-02 Trunnion Bridge Beam

Section 5.11.11: Interface Panel A to USS Trunnion Beam Bolt Analysis

Margin of Safety

Table 5.11.11-1: Minimum Margin of Safety

Part / Dwg Number	Part Name / Description	Material & Heat Treatment	Failure Mode	Margin of Safety	Reference Page
NAS1004-8A	Shared Fasteners connecting Lower Edge of IPA to Trunnion Beam	A286	Total Tension Yield	0.14 (y)	5.11.11-13

Notes:

1. Factors of Safety are 2.0 for Ultimate and 1.25 for Yield.
2. 64 launch load cases, 64 landing load cases and 3 kickload cases were applied to the IPA.
3. y = yield

Prepared By	Name	Date	Engineering and Science Contract Group	File Name
	J.R.Thorington	12/06/07		PaneltoBeam1
Checked By	C. Bala		*Structural Analysis Section*	Drawing No. SEG39137684
Title	Bolt Analysis for Exterior Bolt through Base Panel & Stiffener to USS Beam			

Base Panel and Stiffener (SDG39137685, SDG39137843) to USS Trunnion Beam (SDG39135735)

CHECK BOLTS (NAS1004-6A, Material-A-286), Nuts(NAS1291C4M, Material-A-286)
Washers(NAS1149E0463R, Material-A-286)

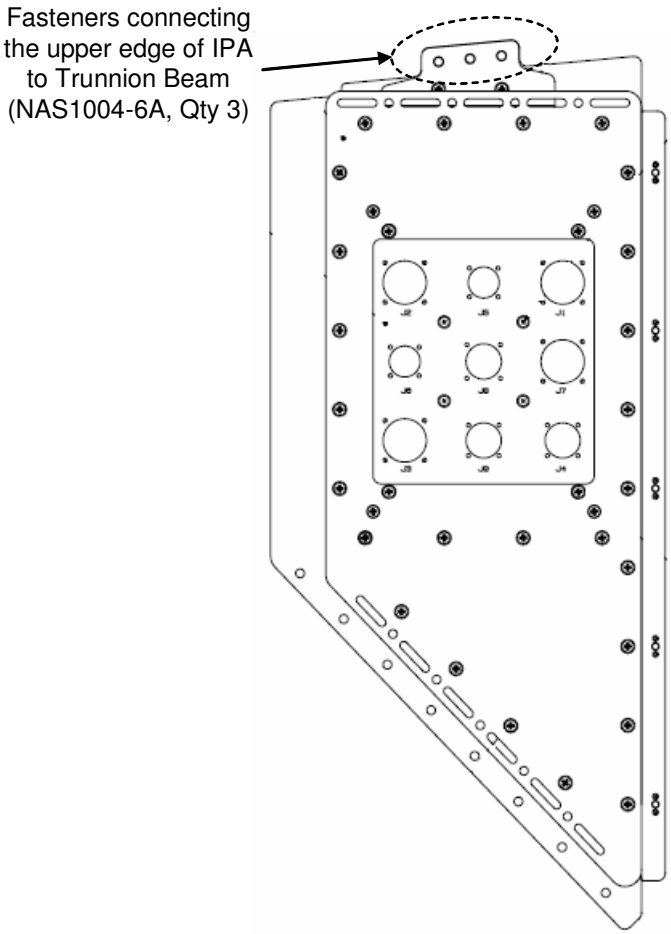

Prepared By	Name J.R.Thorington	Date 12/06/07	Engineering and Science Contract Group *Structural Analysis Section*	File Name PaneltoBeam1
Checked By	C. Bala			Draw ing No. SEG39137684
Title	Bolt Analysis for Exterior Bolt through Base Panel & Stiffener to USS Beam			

Base Panel and Stiffener (SDG39137685, SDG39137843) to USS Trunnion Beam (SDG39135735)

CHECK BOLTS (NAS1004-6A, Material-A-286), Nuts(NAS1291C4M, Material-A-286)
Washers(NAS1149E0463R, Material-A-286)

Combined Flange 1: Base Panel & Stiffener
Part numbers: SDG39137685, 7843
Material: AL ALY 7075-T73

Flange 2: USS Beam
Part number: SDG39135735
Material: AL ALY 7075-T73511

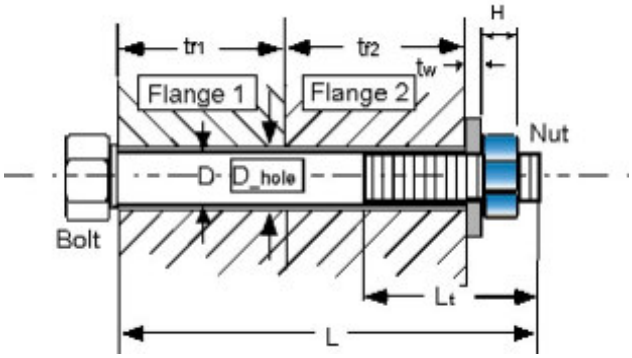

Note: Figure is for reference only.
Not to scale, and actual joint may differ
Washer may be on nut side, head side, or both

Minimum edge distance of flange one: $edge1 := 0.420 \cdot in$

flange two: $edge2 := 0.375 \cdot in$

Loads

Applied tensile load $P := 31.25 lbf$

Applied shear load $V := 752.275 lbf$

Applied bending moment $M := 0 in \cdot lbf$

Factors of Safety

Ultimate $SFu := 2.0$ Yield $SFy := 1.25$ Joint Separation $SFsep := 1.2$

Fitting factor $FF := 1.15$

Temperature data

Assembly $Temp_initial := 70 \cdot deg$

Maximum $Temp_max := 220 \cdot deg$

Minimum $Temp_min := -180 \cdot deg$

note, these are maximum temperatures that hardware sees / if maximum load occurs at a different temperature this will be conservative

Bolt Data

Nominal diameter of bolt $D := .25 \cdot in$

Number of threads/inch $Nt := 28 \cdot \frac{1}{in}$

Shank diameter of bolt $D_shank := .2495 \cdot in$

Note, if there is a retainer groove in the fastener, this should be the calculated diameter to give an equivalent cross sectional area

Total length of bolt $L := .919 \cdot in$

Threaded length $Lt := 0.544 \cdot in$ (If bolt is fully threaded, input Lt = L)

Bolt head dia. across flats $dw := 0.439 \cdot in$ (dia of pressure boss if it exists, otherwise dia of head)

Bolt head height $bh := .156 \cdot in$ (head height is 0 if bolt is flat head)

Prepared By	Name	Date	Engineering and Science Contract Group	File Name
	J.R.Thorington	12/06/07		PaneltoBeam1
Checked By	C. Bala		*Structural Analysis Section*	Draw ing No. SEG39137684
Title	Bolt Analysis for Exterior Bolt through Base Panel & Stiffener to USS Beam			

Thread data lookup table is hidden

Fri Apr 27 14:15:35 2007

This file uses the data shown in \\escfil02\2i11_mathcad\8307_bolts\Rev_D\thread_data.mcd

Temperature correction factor for bolt strength ultimate. $TSu_bolt := 0.96$ Yield $TSy_bolt := 0.96$

Bolt ultimate tensile allowable stress ultimate: $Ftu_bolt := 140000 \cdot psi$ Yield $Fty_bolt := 95000 \cdot psi$

Bolt ultimate shear allowable stress $Fsu_bolt := 0.6 \cdot Ftu_bolt$

Temperature correction factor for bolt modulus $TE_bolt := 0.96$

Modulus of elasticity of bolt $E_bolt := \left(29.1 \cdot 10^{6} \cdot psi\right)$

Thermal coefficients for bolt $\beta_bolt_hot := 9.2 \cdot 10^{-6} \cdot \frac{\frac{in}{in}}{deg}$ $\beta_bolt_cold := 8.0 \cdot 10^{-6} \cdot \frac{\frac{in}{in}}{deg}$

Washer Data

Thickness of washers: head $twh := 0.063 \cdot in$

nut $twn := 0.063 \cdot in$

these are total washer thickness, if there are more than one

Diameter of washer under head, Outer: $Dwoh := 0.500in$

Inner: $Dwih := 0.265 \cdot in$

Diameter of washer under nut, Outer: $Dwon := 0.500in$

Inner: $Dwin := 0.265 \cdot in$

Note: If there are no washer tw's, Dw's and Dwi's should be zero

Modulus of elasticity, head: $E_washerh := \left(29.1 \cdot 10^{6} \cdot psi\right)$

nut: $E_washern := \left(29.1 \cdot 10^{6} \cdot psi\right)$

Temperature correction factor for modulus, head: $TE_washerh := 0.96$

nut: $TE_washern := 0.96$

Nut Data

Height of nut $H := 0.219 \cdot in$

Nut dia. across flats $Dn := 0.304 \cdot in$

Temperature correction factor for nut strength $TS_nut := 0.96$

Ultimate allowable stress, tensile: $Ftu_nut := 160000 \cdot psi$

Shear: $Fsu_nut := 0.6 \cdot Ftu_nut$

Ultimate axial strength of nut $Ptu_nut := 4580 \cdot lbf$ *(Reference NAS1291)*

Prepared By	Name J.R.Thorington	Date 12/06/07	Engineering and Science Contract Group *Structural Analysis Section*	File Name PaneltoBeam1
Checked By	C. Bala			Drawing No. SEG39137684
Title	Bolt Analysis for Exterior Bolt through Base Panel & Stiffener to USS Beam			

Flange data

Stiffness of the joint depends upon number of members in the grip of the fasteners & their material properties,

Thickness of flange 1: $tf1 := .245 \cdot in$ flange 2: $tf2 := .250in$ Diameter of thru hole $D_hole := 0.288 \cdot in$

Modulus of elasticity of these members, with temperature correction factors

Compressive Modulus of elasticity for the parts in the joint $E_flange1 := \left(10.3 \times 10^{6} \cdot psi\right)$ $E_flange2 := \left(10.4 \cdot 10^{6} \cdot psi\right)$

Temperature correction factor (modulus) for flange 1: $Tf1E := 0.95$ flange 2: $Tf2E := 0.95$

Coefficient of thermal expansion for flanges

$\beta_flange1_hot := 12.75 \cdot 10^{-6} \cdot \frac{\frac{in}{in}}{deg}$ $\beta_flange2_hot := 12.75 \cdot 10^{-6} \cdot \frac{\frac{in}{in}}{deg}$

$\beta_flange1_cold := 12.1 \cdot 10^{-6} \cdot \frac{\frac{in}{in}}{deg}$ $\beta_flange2_cold := 12.1 \cdot 10^{-6} \cdot \frac{\frac{in}{in}}{deg}$

Torque/Preload data

Maximum torque $Tmax := 78 \cdot in \cdot lbf$

Minimum torque $Tmin := 66in \cdot lbf$

Joint is lubed/dry

Preload Uncertainty $u := 0.25$

Torque coefficient $k := 0.15$

Loading plane factor $n := 0.5$

Stiffness and Margin calculations are hidden

Fri Apr 27 14:15:49 2007

This file uses the calculations shown in \\escfil02\2i11_mathcad\8307_bolts\Rev_D\bolt_stiffness_nut.mcd

Bolt Load data

Bolt/joint stiffness factor $= 0.493$

Max. preload $PLDmax = 2793\,lbf$

Min. preload $PLDmin = 818\,lbf$

Nom. preload $PLDnom = 2080\,lbf$

Preload to yield ratio(nom.) $PLDratio = 0.646$

Joint separation load $Psep = 37.5\,lbf$

Preload due to temperature $Pthr_pos = 193\,lbf$

$Pthr_neg = -371.5\,lbf$

Uncertainty factor $u = 0.25$

Torque coefficient $k = 0.15$

Loading plane factor $n = 0.5$

Bolt Load data (cont.)

Applied Tensile load on the bolt $P = 31.25\,lbf$

Applied shear on the bolt $V = 752.275\,lbf$

Applied bending on the bolt $M = 0\,in \cdot lbf$

Max. load on the bolt with preload and Factor of safety

(ultimate) $Pb = 2811\,lbf$

(yield) $Pby = 2804\,lbf$

Max. load on the bolt with preload without factor of safety $Pbapp = 2802\,lbf$

Bolt ultimate tensile strength $PAt = 4742\,lbf$

Thread pullout strength $PAs = 4397\,lbf$

Nut ultimate tensile strength $Ptu_nut = 4397\,lbf$

Bolt shear strength $VAu = 3943\,lbf$

Bolt bending strength $MAu = 132\,in \cdot lbf$

General Checks

length_check = "Bolt length sufficient, but not enough threaded length (shank within nut threads)"

cone_check = "Joint pressure cone does not extend pass flange edge"

preload_check = "NOTE: Nominal preload < 65% of bolt yield strength"

washer_check = "Washers under head and nut do not extend past flanges"

Summary of Margins for bolt:

Joint separation	$MS_1 = 24.19$	Direct Thread shear Ultimate	$MS_6 = 60.17$
Direct Tension Ultimate	$MS_2 = 64.98$	Total Thread shear Ultimate	$MS_7 = 0.56$
Direct Tension Yield	$MS_3 = 70.63$	Shear Ultimate	$MS_8 = 1.28$
Total Tension Ultimate	$MS_4 = 0.69$	Bending Ultimate	$MS_9 = 100$
Total Tension Yield	$MS_5 = 0.15$	Combined shear, tension and bending ultimate	$MS_{10} = 0.45$

Smallest margin of safety for the bolt, and the failure mode:

MSbolt = 0.15 Failure_Mode = "Total Tension Yield"

Prepared By	Name J.R.Thorington	Date 12/06/07	Engineering and Science Contract Group *Structural Analysis Section*	File Name PaneltoBeam1
Checked By	C. Bala			Draw ing No. SEG39137684
Title	Bolt Analysis for Exterior Bolt through Base Panel & Stiffener to USS Beam			

Fail-safe Analysis (Conservatively, the loads were doubled to perform fail-safe analysis)

Fail-safe Loads

Applied tensile load $P_FS := 62.5 \cdot lbf$

Applied shear load $V_FS := 1504.55 \cdot lbf$

Applied bending moment $M_FS := 0 \cdot in \cdot lbf$

Fail-safe Factors of Safety

Ultimate $SFu_FS := 1.0$

Joint Separation $SFsep_FS := 1.0$

Fail Safe Margin calculations are hidden / stiffness & allowable data is not recalculated

Fri Apr 27 14:16:05 2007

This file uses the calculations shown in \\escfil02\2i11_mathcad\8307_bolts\Rev_D\bolt_stiffness_nut_FS.mcd

Bolt Fail-safe Load data

Joint separation load $Psep_FS = 62.5\,lbf$

Max. load on the bolt(ultimate) $Pb_FS = 2810.7\,lbf$

Summary of fail-safe Margins for bolt:

Joint separation $MS_FS_1 = 14.11$

Direct Tension Ultimate $MS_FS_2 = 64.98$

Total Tension Ultimate $MS_FS_3 = 0.69$

Direct Thread shear Ultimate $MS_FS_4 = 60.17$

Total Thread shear Ultimate $MS_FS_5 = 0.56$

Shear Ultimate $MS_FS_6 = 1.28$

Bending Ultimate $MS_FS_7 = 10$

Combined shear, tension and bending ultimate $MS_FS_8 = 0.45$

Determination of the smallest fail-safe margin of safety for the bolt, and the failure mode:

$MSbolt_FS = 0.45$ Failure_Mode_FS = "Combined Shear Tension Bending Ultimate"

Prepared By	Name	Date		File Name
	J.R.Thorington	12/06/07		PaneltoBeam2
Checked By	C. Bala		**Engineering and Science Contract Group** *Structural Analysis Section*	Draw ing No. SEG39137684
Title	Bolt Analysis for Exterior Bolt through Handrail Brkt. & Base Panel to USS Beam			

Base Panel and Handrail (SDG39137685, SDG39135878) to USS Trunnion Beam (SDG39135735)

CHECK BOLTS (NAS1004-8A Material-A-286), Nuts(NAS1291C4M, Material-A-286)
Washers(NAS1149E0463R, Material-A-286)

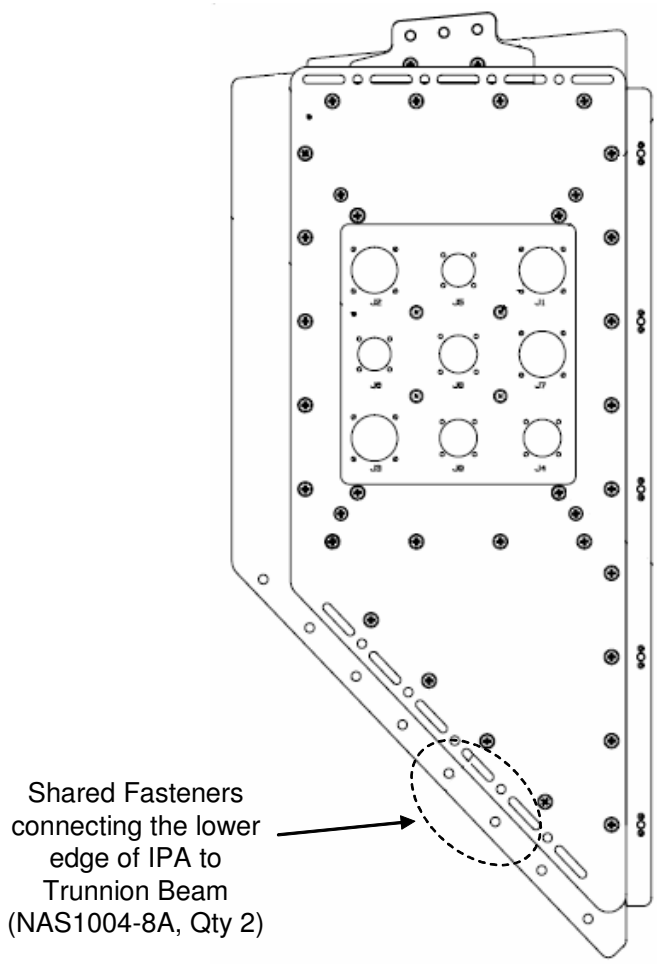

Prepared By	Name J.R.Thorington	Date 12/06/07	Engineering and Science Contract Group *Structural Analysis Section*	File Name PaneltoBeam2
Checked By	C. Bala			Draw ing No. SEG39137684
Title	Bolt Analysis for Exterior Bolt through Handrail Brkt. & Base Panel to USS Beam			

Base Panel and Handrail (SDG39137685, SDG39135878) to USS Trunnion Beam (SDG39135735)

CHECK BOLTS (NAS1004-8A Material-A-286), Nuts(NAS1291C4M, Material-A-286)
Washers(NAS1149E0463R, Material-A-286)

Combined Flange 1: Base Panel & Handrail
Part numbers: SDG39137685, 5878
Material: AL ALY 7075-T73

Flange 2: USS Beam
Part number: SDG39135735
Material: AL ALY 7075-T73511

Minimum edge distance of flange one: $edge1 := 0.420 \cdot in$

flange two: $edge2 := 0.375 \cdot in$

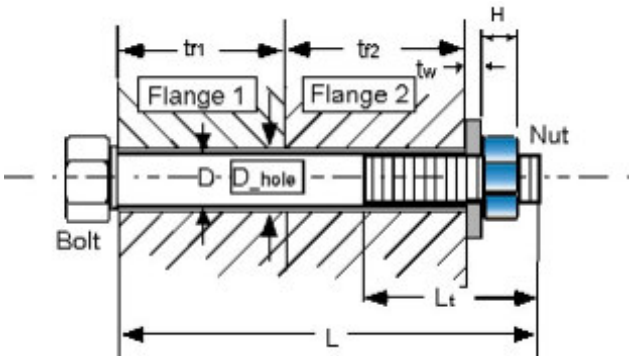

Note: Figure is for reference only.
Not to scale, and actual joint may differ
Washer may be on nut side, head side, or both

Loads

Applied tensile load $P := 5.315 lbf$

Applied shear load $V := 535.794 lbf$

Applied bending moment $M := 0 in \cdot lbf$

Factors of Safety

Ultimate $SFu := 2.0$ Yield $SFy := 1.25$ Joint Separation $SFsep := 1.2$

Fitting factor $FF := 1.15$

Temperature data

Assembly $Temp_initial := 70 \cdot deg$

Maximum $Temp_max := 220 \cdot deg$

Minimum $Temp_min := -180 \cdot deg$

note, these are maximum temperatures that hardware sees / if maximum load occurs at a different temperature this will be conservative

Bolt Data

Nominal diameter of bolt $D := .25 \cdot in$

Number of threads/inch $Nt := 28 \cdot \frac{1}{in}$

Shank diameter of bolt $D_shank := .249 \cdot in$

Note, if there is a retainer groove in the fastener, this should be the calculated diameter to give an equivalent cross sectional area

Total length of bolt $L := 1.044 \cdot in$

Threaded length $Lt := 0.544 \cdot in$ (If bolt is fully threaded, input Lt = L)

Bolt head dia. across flats $dw := 0.439 \cdot in$ (dia of pressure boss if it exists, otherwise dia of head)

Bolt head height $bh := .156 \cdot in$ (head height is 0 if bolt is flat head)

Prepared By	Name J.R.Thorington	Date 12/06/07	Engineering and Science Contract Group *Structural Analysis Section*	File Name PaneltoBeam2
Checked By	C. Bala			Drawing No. SEG39137684
Title	Bolt Analysis for Exterior Bolt through Handrail Brkt. & Base Panel to USS Beam			

Thread data lookup table is hidden

Fri Apr 27 14:15:35 2007

This file uses the data shown in \\escfil02\2i11_mathcad\8307_bolts\Rev_D\thread_data.mcd

Temperature correction factor for bolt strength ultimate. $TSu_bolt := 0.96$ Yield $TSy_bolt := 0.96$

Bolt ultimate tensile allowable stress ultimate: $Ftu_bolt := 140000 \cdot psi$ Yield $Fty_bolt := 95000 \cdot psi$

Bolt ultimate shear allowable stress $Fsu_bolt := 0.6 \cdot Ftu_bolt$

Temperature correction factor for bolt modulus $TE_bolt := 0.96$

Modulus of elasticity of bolt $E_bolt := \left(29.1 \cdot 10^{6} \cdot psi\right)$

Thermal coefficients for bolt $\beta_bolt_hot := 9.2 \cdot 10^{-6} \cdot \frac{\frac{in}{in}}{deg}$ $\beta_bolt_cold := 8.0 \cdot 10^{-6} \cdot \frac{\frac{in}{in}}{deg}$

Washer Data

Thickness of washers: head $twh := 0.063 \cdot in$

nut $twn := 0.063 \cdot in$

these are total washer thickness, if there are more than one

Diameter of washer under head, Outer: $Dwoh := 0.500in$ Inner: $Dwih := 0.265 \cdot in$

Diameter of washer under nut, Outer: $Dwon := 0.500in$ Inner: $Dwin := 0.265 \cdot in$

Note: If there are no washer tw's, Dw's and Dwi's should be zero

Modulus of elasticity, head: $E_washerh := \left(29.1 \cdot 10^{6} \cdot psi\right)$

nut: $E_washern := \left(29.1 \cdot 10^{6} \cdot psi\right)$

Temperature correction factor for modulus, head: $TE_washerh := 0.96$

nut: $TE_washern := 0.96$

Nut Data

Height of nut $H := 0.219 \cdot in$ Nut dia. across flats $Dn := 0.316 \cdot in$

Temperature correction factor for nut strength $TS_nut := 0.96$

Ultimate allowable stress, tensile: $Ftu_nut := 160000 \cdot psi$ Shear: $Fsu_nut := 0.6 \cdot Ftu_nut$

Ultimate axial strength of nut $Ptu_nut := 4580 \cdot lbf$ *(Reference NAS1291)*

Prepared By	Name J.R.Thorington	Date 12/06/07	Engineering and Science Contract Group *Structural Analysis Section*	File Name PaneltoBeam2
Checked By	C. Bala			Drawing No. SEG39137684
Title	Bolt Analysis for Exterior Bolt through Handrail Brkt. & Base Panel to USS Beam			

Flange data

Stiffness of the joint depends upon number of members in the grip of the fasteners & their material properties,

Thickness of flange 1: $tf1 := .245 \cdot in$ flange 2: $tf2 := .250in$ Diameter of thru hole $D_hole := 0.288 \cdot in$

Modulus of elasticity of these members, with temperature correction factors

Compressive Modulus of elasticity for the parts in the joint $E_flange1 := \left(10.3 \times 10^{6} \cdot psi\right)$ $E_flange2 := \left(10.3 \cdot 10^{6} \cdot psi\right)$

Temperature correction factor (modulus) for flange 1: $Tf1E := 0.95$ flange 2: $Tf2E := 0.95$

Coefficient of thermal expansion for flanges

$\beta_flange1_hot := 12.75 \cdot 10^{-6} \cdot \frac{\frac{in}{in}}{deg}$ $\beta_flange2_hot := 12.75 \cdot 10^{-6} \cdot \frac{\frac{in}{in}}{deg}$

$\beta_flange1_cold := 12.1 \cdot 10^{-6} \cdot \frac{\frac{in}{in}}{deg}$ $\beta_flange2_cold := 12.1 \cdot 10^{-6} \cdot \frac{\frac{in}{in}}{deg}$

Torque/Preload data

Maximum torque $Tmax := 78 \cdot in \cdot lbf$

Minimum torque $Tmin := 66in \cdot lbf$

Joint is lubed/dry

Preload Uncertainty $u := 0.25$

Torque coefficient $k := 0.15$

Loading plane factor $n := 0.5$

Stiffness and Margin calculations are hidden

Fri Apr 27 14:15:49 2007

This file uses the calculations shown in \\escfil02\2i11_mathcad\8307_bolts\Rev_D\bolt_stiffness_nut.mcd

Bolt Load data

Bolt/joint stiffness factor $= 0.467$

Max. preload $PLDmax = 2813\,lbf$

Min. preload $PLDmin = 779\,lbf$

Nom. preload $PLDnom = 2080\,lbf$

Preload to yield ratio(nom.) $PLDratio = 0.646$

Joint separation load $Psep = 6.378\,lbf$

Preload due to temperature $Pthr_pos = 213.4\,lbf$

$Pthr_neg = -410.8\,lbf$

Uncertainty factor $u = 0.25$

Torque coefficient $k = 0.15$

Loading plane factor $n = 0.5$

Bolt Load data (cont.)

Applied Tensile load on the bolt $P = 5.315\,lbf$

Applied shear on the bolt $V = 535.794\,lbf$

Applied bending on the bolt $M = 0\,in \cdot lbf$

Max. load on the bolt with preload and Factor of safety

(ultimate) $Pb = 2816\,lbf$

(yield) $Pby = 2815\,lbf$

Max. load on the bolt with preload without factor of safety $Pbapp = 2815\,lbf$

Bolt ultimate tensile strength $PAt = 4742\,lbf$

Thread pullout strength $PAs = 4397\,lbf$

Nut ultimate tensile strength $Ptu_nut = 4397\,lbf$

Bolt shear strength $VAu = 3927\,lbf$

Bolt bending strength $MAu = 132\,in \cdot lbf$

General Checks

length_check = "Bolt length sufficient, but not enough threaded length (shank within nut threads)"

cone_check = "Joint pressure cone does not extend pass flange edge"

preload_check = "NOTE: Nominal preload < 65% of bolt yield strength"

washer_check = "Washers under head and nut do not extend past flanges"

Summary of Margins for bolt:

Joint separation	$MS_1 = 137.57$	Direct Thread shear Ultimate	$MS_6 = 358.67$
Direct Tension Ultimate	$MS_2 = 386.91$	Total Thread shear Ultimate	$MS_7 = 0.56$
Direct Tension Yield	$MS_3 = 420.16$	Shear Ultimate	$MS_8 = 2.19$
Total Tension Ultimate	$MS_4 = 0.68$	Bending Ultimate	$MS_9 = 100$
Total Tension Yield	$MS_5 = 0.14$	Combined shear, tension and bending ultimate	$MS_{10} = 0.58$

Smallest margin of safety for the bolt, and the failure mode:

MSbolt = 0.14 Failure_Mode = "Total Tension Yield"

Prepared By	Name	Date		File Name
	J.R.Thorington	12/06/07		PaneltoBeam2
Checked By	C. Bala		Engineering and Science Contract Group *Structural Analysis Section*	Draw ing No. SEG39137684
Title	Bolt Analysis for Exterior Bolt through Handrail Brkt. & Base Panel to USS Beam			

Fail-safe Analysis (Conservatively, the loads were doubled to perform fail-safe analysis)

Fail-safe Loads

Applied tensile load $P_FS := 10.63 \cdot lbf$

Applied shear load $V_FS := 1071.59 \cdot lbf$

Applied bending moment $M_FS := 0 \cdot in \cdot lbf$

Fail-safe Factors of Safety

Ultimate $SFu_FS := 1.0$

Joint Separation $SFsep_FS := 1.0$

Fail Safe Margin calculations are hidden / stiffness & allowable data is not recalculated

Fri Apr 27 14:16:05 2007

This file uses the calculations shown in \\escfil02\2i11_mathcad\8307_bolts\Rev_D\bolt_stiffness_nut_FS.mcd

Bolt Fail-safe Load data

Joint separation load $Psep_FS = 10.63\,lbf$

Max. load on the bolt(ultimate) $Pb_FS = 2816.3\,lbf$

Summary of fail-safe Margins for bolt:

Joint separation $MS_FS_1 = 82.14$

Direct Tension Ultimate $MS_FS_2 = 386.91$

Total Tension Ultimate $MS_FS_3 = 0.68$

Direct Thread shear Ultimate $MS_FS_4 = 358.67$

Total Thread shear Ultimate $MS_FS_5 = 0.56$

Shear Ultimate $MS_FS_6 = 2.19$

Bending Ultimate $MS_FS_7 = 10$

Combined shear, tension and bending ultimate $MS_FS_8 = 0.58$

Determination of the smallest fail-safe margin of safety for the bolt, and the failure mode:

$MSbolt_FS = 0.56$ $Failure_Mode_FS = \text{"Total Thread Shear Ultimate (Bolt)"}$

Prepared By	Name	Date	Engineering and Science Contract Group	File Name
	J.R.Thorington	12/06/07		PaneltoBeam3
Checked By	C. Bala		*Structural Analysis Section*	Draw ing No. SEG39137684
Title	Bolt Analysis for Exterior Bolt through Base Panel to USS Beam			

Base Panel (SDG39137685) to USS Trunnion Beam (SDG39135735)

CHECK BOLTS (NAS1004-6A, Material-A-286), Nuts(NAS1291C4M, Material-A-286)
Washers(NAS1149E0463R, Material-A-286)

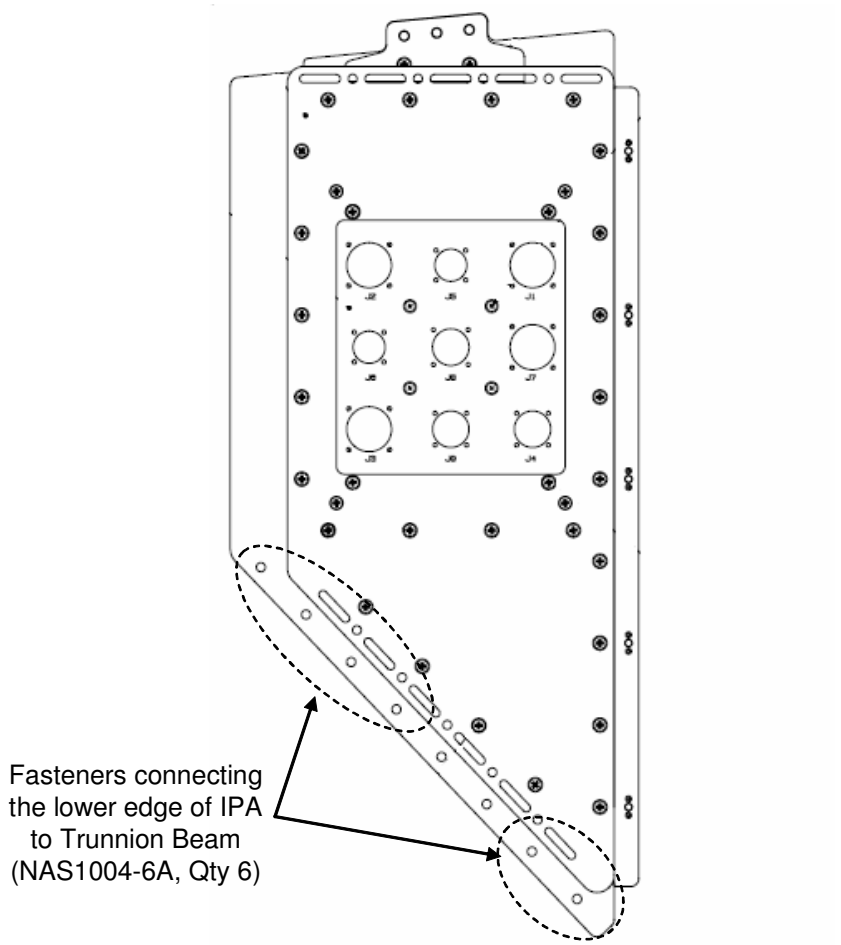

Prepared By	Name	Date	Engineering and Science Contract Group	File Name
	J.R.Thorington	12/06/07		PaneltoBeam3
Checked By	C. Bala		*Structural Analysis Section*	Draw ing No. SEG39137684
Title	Bolt Analysis for Exterior Bolt through Base Panel to USS Beam			

Base Panel (SDG39137685) to USS Trunnion Beam (SDG39135735)

CHECK BOLTS (NAS1004-6A, Material-A-286), Nuts(NAS1291C4M, Material-A-286)
Washers(NAS1149E0463R, Material-A-286)

Flange 1: Base Panel
Part numbers: SDG39137685
Material: AL ALY 7075-T73

Flange 2: USS Beam
Part number: SDG39135735
Material: AL ALY 7075-T73511

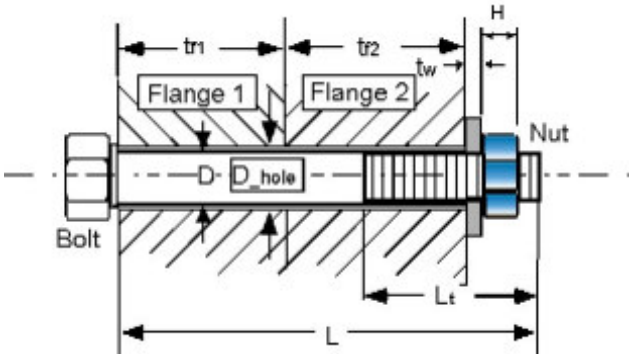

Note: Figure is for reference only.
Not to scale, and actual joint may differ
Washer may be on nut side, head side, or both

Minimum edge distance of flange one: $edge1 := 0.420 \cdot in$

flange two: $edge2 := 0.375 \cdot in$

Loads

Applied tensile load $P := 5.724 lbf$

Applied shear load $V := 612.266 lbf$

Applied bending moment $M := 0 in \cdot lbf$

Factors of Safety

Ultimate $SFu := 2.0$ Yield $SFy := 1.25$ Joint Separation $SFsep := 1.2$

Fitting factor $FF := 1.15$

Temperature data

Assembly $Temp_initial := 70 \cdot deg$

Maximum $Temp_max := 220 \cdot deg$

Minimum $Temp_min := -180 \cdot deg$

note, these are maximum temperatures that hardware sees / if maximum load occurs at a different temperature this will be conservative

Bolt Data

Nominal diameter of bolt $D := .25 \cdot in$

Number of threads/inch $Nt := 28 \cdot \frac{1}{in}$

Shank diameter of bolt $D_shank := .249 \cdot in$

Note, if there is a retainer groove in the fastener, this should be the calculated diameter to give an equivalent cross sectional area

Total length of bolt $L := .919 \cdot in$

Threaded length $Lt := 0.544 \cdot in$ (If bolt is fully threaded, input Lt = L)

Bolt head dia. across flats $dw := 0.439 \cdot in$ (dia of pressure boss if it exists, otherwise dia of head)

Bolt head height $bh := .156 \cdot in$ (head height is 0 if bolt is flat head)

Prepared By	Name J.R.Thorington	Date 12/06/07	Engineering and Science Contract Group *Structural Analysis Section*	File Name PaneltoBeam3
Checked By	C. Bala			Drawing No. SEG39137684
Title	Bolt Analysis for Exterior Bolt through Base Panel to USS Beam			

Thread data lookup table is hidden

Fri Apr 27 14:15:35 2007

This file uses the data shown in \\escfil02\2i11_mathcad\8307_bolts\Rev_D\thread_data.mcd

Temperature correction factor for bolt strength ultimate. $TSu_bolt := 0.96$ Yield $TSy_bolt := 0.96$

Bolt ultimate tensile allowable stress ultimate: $Ftu_bolt := 140000 \cdot psi$ Yield $Fty_bolt := 95000 \cdot psi$

Bolt ultimate shear allowable stress $Fsu_bolt := 0.6 \cdot Ftu_bolt$

Temperature correction factor for bolt modulus $TE_bolt := 0.96$

Modulus of elasticity of bolt $E_bolt := \left(29.1 \cdot 10^{6} \cdot psi\right)$

Thermal coefficients for bolt $\beta_bolt_hot := 9.2 \cdot 10^{-6} \cdot \frac{\frac{in}{in}}{deg}$ $\beta_bolt_cold := 8.0 \cdot 10^{-6} \cdot \frac{\frac{in}{in}}{deg}$

Washer Data

Thickness of washers: head $twh := 0.063 \cdot in$

nut $twn := 0.063 \cdot in$

these are total washer thickness, if there are more than one

Diameter of washer under head, Outer: $Dwoh := 0.500in$ Inner: $Dwih := 0.265 \cdot in$

Diameter of washer under nut, Outer: $Dwon := 0.500in$ Inner: $Dwin := 0.265 \cdot in$

Note: If there are no washer tw's, Dw's and Dwi's should be zero

Modulus of elasticity, head: $E_washerh := \left(29.1 \cdot 10^{6} \cdot psi\right)$

nut: $E_washern := \left(29.1 \cdot 10^{6} \cdot psi\right)$

Temperature correction factor for modulus, head: $TE_washerh := 0.96$

nut: $TE_washern := 0.96$

Nut Data

Height of nut $H := 0.219 \cdot in$ Nut dia. across flats $Dn := 0.316 \cdot in$

Temperature correction factor for nut strength $TS_nut := 0.96$

Ultimate allowable stress, tensile: $Ftu_nut := 160000 \cdot psi$ Shear: $Fsu_nut := 0.6 \cdot Ftu_nut$

Ultimate axial strength of nut $Ptu_nut := 4580 \cdot lbf$ *(Reference NAS1291)*

Prepared By	Name	Date		File Name
	J.R.Thorington	12/06/07	Engineering and Science Contract Group	PaneltoBeam3
Checked By	C. Bala		*Structural Analysis Section*	Draw ing No. SEG39137684
Title	Bolt Analysis for Exterior Bolt through Base Panel to USS Beam			

Flange data

Stiffness of the joint depends upon number of members in the grip of the fasteners & their material properties,

Thickness of flange 1: $tf1 := .125 \cdot in$ flange 2: $tf2 := .250in$ Diameter of thru hole $D_hole := 0.288 \cdot in$

Modulus of elasticity of these members, with temperature correction factors

Compressive Modulus of elasticity for the parts in the joint $E_flange1 := \left(10.3 \times 10^{6} \cdot psi\right)$ $E_flange2 := \left(10.3 \cdot 10^{6} \cdot psi\right)$

Temperature correction factor (modulus) for flange 1: $Tf1E := 0.95$ flange 2: $Tf2E := 0.95$

Coefficient of thermal expansion for flanges

$$\beta_flange1_hot := 12.75 \cdot 10^{-6} \cdot \frac{\frac{in}{in}}{deg} \qquad \beta_flange2_hot := 12.75 \cdot 10^{-6} \cdot \frac{\frac{in}{in}}{deg}$$

$$\beta_flange1_cold := 12.1 \cdot 10^{-6} \cdot \frac{\frac{in}{in}}{deg} \qquad \beta_flange2_cold := 12.1 \cdot 10^{-6} \cdot \frac{\frac{in}{in}}{deg}$$

Torque/Preload data

Maximum torque $Tmax := 78 \cdot in \cdot lbf$

Minimum torque $Tmin := 66in \cdot lbf$

Joint is lubed/dry

Preload Uncertainty $u := 0.25$

Torque coefficient $k := 0.15$

Loading plane factor $n := 0.5$

Stiffness and Margin calculations are hidden

Fri Apr 27 14:15:49 2007

This file uses the calculations shown in \\escfil02\2i11_mathcad\8307_bolts\Rev_D\bolt_stiffness_nut.mcd

Bolt Load data

Bolt/joint stiffness factor $= 0.479$

Max. preload $PLDmax = 2782\,lbf$

Min. preload $PLDmin = 840\,lbf$

Nom. preload $PLDnom = 2080\,lbf$

Preload to yield ratio(nom.) $PLDratio = 0.646$

Joint separation load $Psep = 6.869\,lbf$

Preload due to temperature $Pthr_pos = 181.9\,lbf$

$Pthr_neg = -350.1\,lbf$

Uncertainty factor $u = 0.25$

Torque coefficient $k = 0.15$

Loading plane factor $n = 0.5$

Bolt Load data (cont.)

Applied Tensile load on the bolt $P = 5.724\,lbf$

Applied shear on the bolt $V = 612.266\,lbf$

Applied bending on the bolt $M = 0\,in \cdot lbf$

Max. load on the bolt with preload and Factor of safety

(ultimate) $Pb = 2785\,lbf$

(yield) $Pby = 2784\,lbf$

Max. load on the bolt with preload without factor of safety $Pbapp = 2783\,lbf$

Bolt ultimate tensile strength $PAt = 4742\,lbf$

Thread pullout strength $PAs = 4397\,lbf$

Nut ultimate tensile strength $Ptu_nut = 4397\,lbf$

Bolt shear strength $VAu = 3927\,lbf$

Bolt bending strength $MAu = 132\,in \cdot lbf$

General Checks

length_check = "Bolt length is sufficient and nut fully engaged"

cone_check = "Joint pressure cone does not extend pass flange edge"

preload_check = "NOTE: Nominal preload < 65% of bolt yield strength"

washer_check = "Washers under head and nut do not extend past flanges"

Summary of Margins for bolt:

Joint separation	$MS_1 = 138.83$	Direct Thread shear Ultimate	$MS_6 = 332.97$
Direct Tension Ultimate	$MS_2 = 359.19$	Total Thread shear Ultimate	$MS_7 = 0.58$
Direct Tension Yield	$MS_3 = 390.07$	Shear Ultimate	$MS_8 = 1.79$
Total Tension Ultimate	$MS_4 = 0.7$	Bending Ultimate	$MS_9 = 100$
Total Tension Yield	$MS_5 = 0.16$	Combined shear, tension and bending ultimate	$MS_{10} = 0.55$

Smallest margin of safety for the bolt, and the failure mode:

MSbolt = 0.16 Failure_Mode = "Total Tension Yield"

Prepared By	Name J.R.Thorington	Date 12/06/07	Engineering and Science Contract Group *Structural Analysis Section*	File Name PaneltoBeam3
Checked By	C. Bala			Draw ing No. SEG39137684
Title	Bolt Analysis for Exterior Bolt through Base Panel to USS Beam			

Fail-safe Analysis (Conservatively, the loads were doubled to perform fail-safe analysis)

Fail-safe Loads

Applied tensile load $P_FS := 11.45 \cdot lbf$

Applied shear load $V_FS := 1224.53 \cdot lbf$

Applied bending moment $M_FS := 0 \cdot in \cdot lbf$

Fail-safe Factors of Safety

Ultimate $SFu_FS := 1.0$

Joint Separation $SFsep_FS := 1.0$

Fail Safe Margin calculations are hidden / stiffness & allowable data is not recalculated

Fri Apr 27 14:16:05 2007

This file uses the calculations shown in \\escfil02\2i11_mathcad\8307_bolts\Rev_D\bolt_stiffness_nut_FS.mcd

Bolt Fail-safe Load data

Joint separation load $Psep_FS = 11.45\,lbf$

Max. load on the bolt(ultimate) $Pb_FS = 2785\,lbf$

Summary of fail-safe Margins for bolt:

Joint separation $MS_FS_1 = 82.88$

Direct Tension Ultimate $MS_FS_2 = 359.13$

Total Tension Ultimate $MS_FS_3 = 0.7$

Direct Thread shear Ultimate $MS_FS_4 = 332.91$

Total Thread shear Ultimate $MS_FS_5 = 0.58$

Shear Ultimate $MS_FS_6 = 1.79$

Bending Ultimate $MS_FS_7 = 10$

Combined shear, tension and bending ultimate $MS_FS_8 = 0.55$

Determination of the smallest fail-safe margin of safety for the bolt, and the failure mode:

$MSbolt_FS = 0.55$ $Failure_Mode_FS = \text{"Combined Shear Tension Bending Ultimate"}$

5.12 Handle Brackets

Section 5.12 Handle Bracket Analysis

The Handle Bracket Analysis is performed in the following report sections.

5.12.1	Handle Brackets
5.12.2	Handle Bracket Bolt Analysis
5.12.2	Handle Bracket Bolt Analysis (Fail-Safe)

5.12.1 Handle Brackets

Margins of Safety

Table 5.12.1-1: Minimum Margin of Safety Summary for Handle Bracket -303

Part / Dwg Number	Part Name / Description	Material & Heat Treatment	Critical Load Condition	Failure Mode	Margin of Safety	Reference Page
SDG39135878	Handle Bracket -303, USS-02 Assembly	AL ALY 6061-T651	Load Case 1 Right End	Principal Stress	0.04 (u)	5.12.1-19

Table 5.12.1-2: Minimum Margin of Safety Summary for Handle Bracket -305

Part / Dwg Number	Part Name / Description	Material & Heat Treatment	Critical Load Condition	Failure Mode	Margin of Safety	Reference Page
SDG39135878	Handle Bracket -305, USS-02 Assembly	AL ALY 6061-T651	Load Case 8 Left End	Shear Stress	0.049 (u)	5.12.1-32

Notes:

1. Factors of Safety are 2.0 for Ultimate and 1.25 for Yield
2. u = ultimate
3. Load Cases are presented in Reference 1, Table 9, page 29 and Table 10, page 30

References:

1. Memorandum MSAD-04-0101A of March 26, 2004, Results of Handrail Interface Force Testing

Description of Handle Brackets

This analysis covers three Handle Bracket Assemblies used on USS-02 Assembly and presented in drawing SDG39135878. The three Handle Brackets Assemblies are:

1. Handle Bracket Assembly, part SDG39135878-303
2. Handle Bracket Assembly, part SDG39135878-301/307
3. Handle Bracket Assembly, part SDG39135878-305

The Handle Bracket -301 and -307 are identical with the exception of the mounting holes location for the Rail Post. The location for the part -307 is displaced by 0.050 inch relative to the location for the part -301. Therefore, for the purpose of this analysis, the two parts are considered identical.

Factors of Safety

The Handle Brackets are designed with a yield factor of 1.25 and an ultimate factor of 2.0 against the maximum stresses as predicted by the FEM and shown on page 5.12.1-18 and 5.12.1-31.

Handle Bracket Assembly, part SDG39135878-303

Location of Handle Bracket -303

Figure 5.12.1-1 below shows a typical location of the Handle Bracket -303 on the USS-02 Assembly.

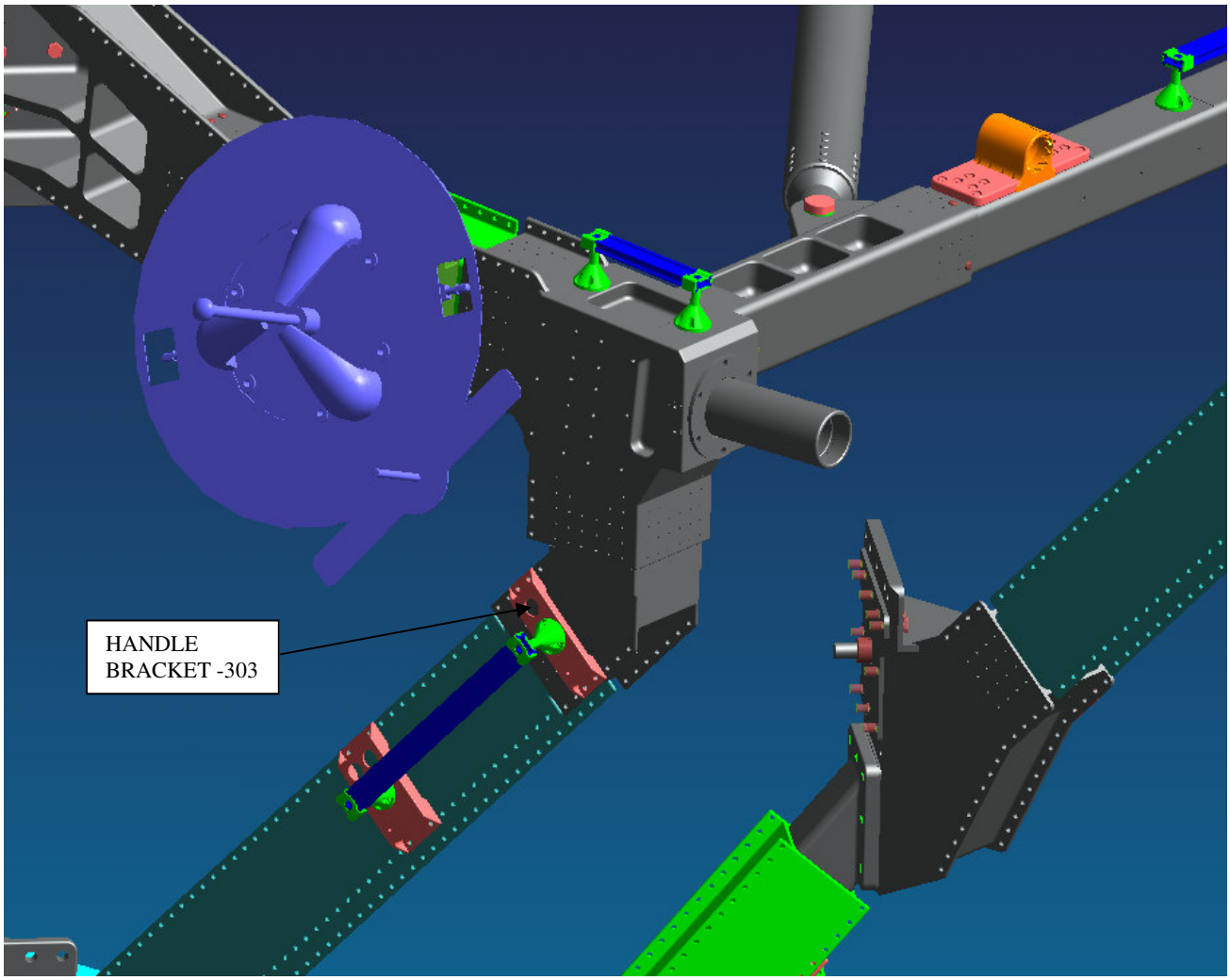

Figure 5.12.1-1: Typical Location of Handle Bracket -303 on USS-02 Assembly

Handle Bracket -303 Load Cases

The Handle Bracket -303 load cases are presented in Reference 1 – Results of Handrail Interface Force Testing. Table 9, on page 29, summarized these cases and is presented below.

Table 9: Interface Forces, Top Mounted Handrails Long Handrails (SEG33106347-843).

Load Case	End	Measured (at handrail interface, pounds force and inch-pounds)						RSS	
		Fx	Fy	Fz	Mx	My	Mz	Force	Moment
1	Left	263	-2	150	10	416	29	303	417
	Right	-257	-4	63	6	-536	-26	265	537
2	Left	16	-148	-1	396	31	-76	149	405
	Right	-12	-72	0	200	-29	21	73	203
3	Left	60	0	32	159	72	-1	68	174
	Right	-59	0	15	109	-99	-17	61	149
4	Left	1	-35	-3	260	5	-60	35	266
	Right	0	-14	-1	156	4	9	14	156
5	Left	0	6	70	-9	-30	4	70	31
	Right	0	4	6	-8	7	-2	7	11
6	Left	45	-1	208	7	71	2	213	71
	Right	-40	-1	9	1	-92	-5	41	93
7	Left	2	-207	-1	542	-1	-29	207	543
	Right	1	-13	0	53	8	3	13	54
8	Left	207	-2	-4	-1	476	-18	207	476
	Right	15	0	-1	0	38	2	15	38
9	Left	-4	-68	-5	192	-11	-31	68	195
	Right	2	-15	-1	59	7	1	15	60
10	Left	2	-25	-3	119	1	45	25	127
	Right	1	3	0	9	5	0	3	10
11	Left	0	-2	0	13	4	1	2	13
	Right	0	0	0	0	0	-1	0	1
Max		263	6	208	542	476	45	303	543
Min		-257	-207	-5	-9	-536	-76	0	1
Absolute Value Max		263	207	208	542	536	76	303	543

The worst cases are selected by engineering judgment and are presented in Table 5.12.1-3 below.

Table 5.12.1-3: Worst Load Cases Summary for Handle Bracket -303

Load Case	Rail End	Fx	Fy	Fz	Mx	My	Mz
1	Left	263	-2	150	10	416	29
1	Right	-257	-4	63	6	-536	-26
7	Left	2	-207	-1	542	-1	-29
8	Left	207	-2	-4	-1	476	-18

The coordinate system associated with these loads is as per Reference 1, and is shown in Figure 5.12.1-2.

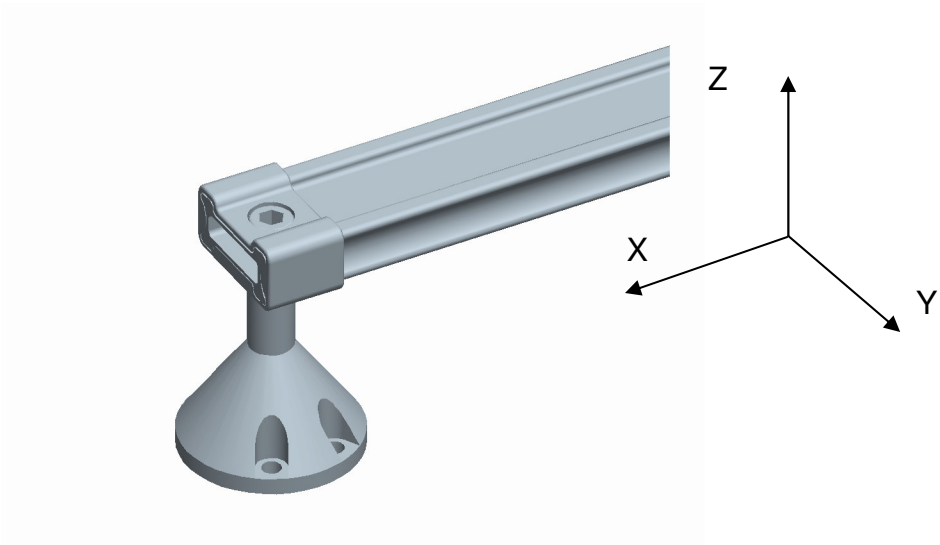

Figure 5.12.1-2: Loads Coordinate System

Figure 5.12.1-3 below shows the configuration of the Handle Bracket -303 with the Rail Post mounted on it and the system coordinate system.

Please note that this coordinate system is as per ProE model and I-DEAS FE model and is different than the above coordinate system (X and Y directions are reversed).

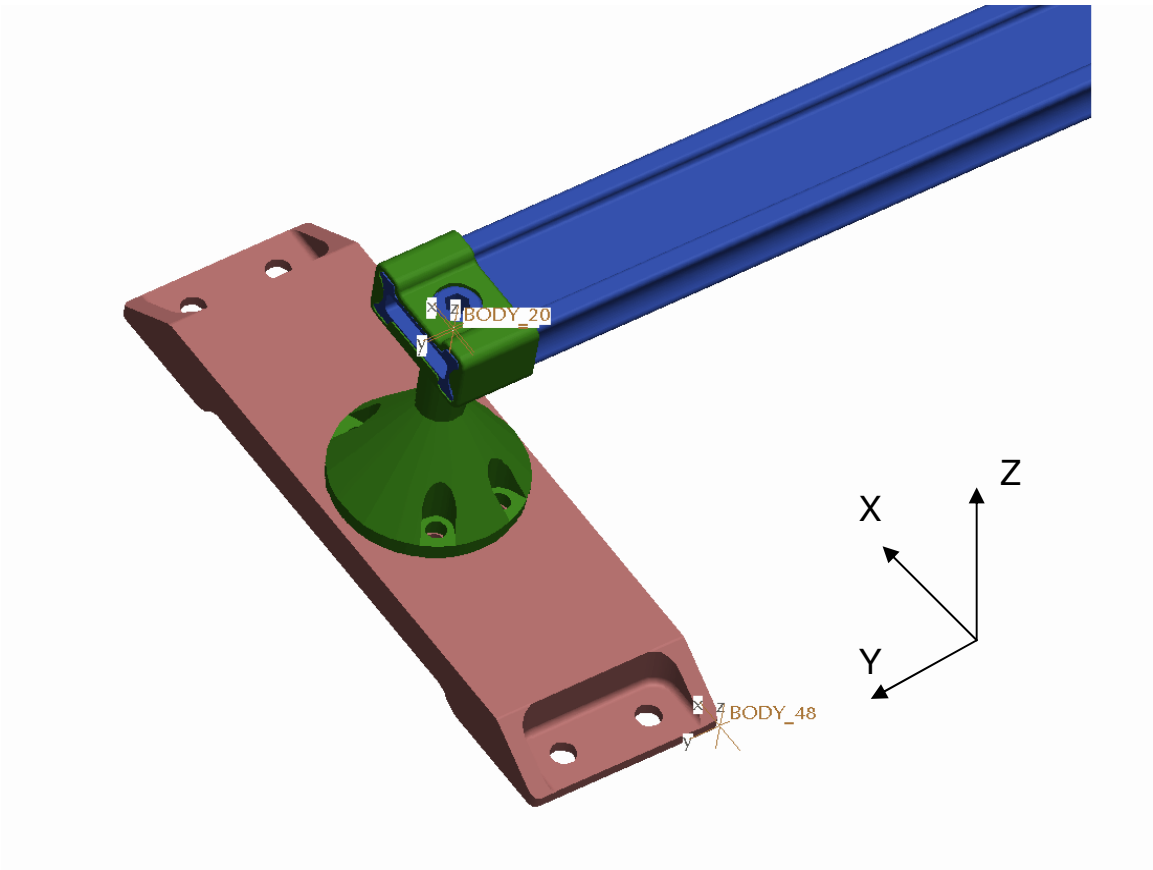

Figure 5.12.1-3: Handle Bracket -303 and Rail Post Assembly Configuration

Description of Model

A FE model of the Handle Bracket -303 is built using I-DEAS software.

1. The Handle Bracket is modeled using solid parabolic tetrahedral elements. These elements are best suited for complex and uneven geometry. The number of elements are selected based on the maximum unaveraged and averaged results in the critical area, such that convergence of results is achieved.
2. At the bolt holes, rigid elements are used to represent the bolt connections.
3. The model is constrained with DOF's 1-3 at four bolt locations.

4. Four load cases are applied selected by engineering judgment from Reference 1, Table 9, page 29 and presented in Table 5.12.1-3. Please note that the ProE and I-DEAS models have a coordinate system different than the coordinate system shown in Reference 1 (see Figures 5.12.1-2 and 5.12.1-3 and note that X and Y directions are reversed). The FE model accounts for the difference in the two coordinate systems and inputs the loads accordingly.
5. The loads are applied at the top of the Bracket, as specified in Reference 1, using rigid elements that represent the four bolts and inserts. These elements connect the central Post bottom surface to the top face of the Bracket.
6. I-DEAS solver is used for analyzing the complete math model of the Handle Bracket. See page 5.12.1-22 for the FE model of the Handle Bracket.
7. I-DEAS is used to sort out the maximum of Principal, Von-Mises, and Shear stresses (see Appendix A19).
8. The FE model is checked using MSC/NASTRAN.

Model Checks

The quality of the model mesh was checked in I-DEAS for distortions and streches of elements. The distortion and strech filter is set at a treshhold of 0.1. All elements passed the criteria.

Rigid body checks are performed using MSC/NASTRAN. Results are shown below. The KGG, KNN and KFF matrices all pass with low strain energies.

```
*** USER INFORMATION MESSAGE 7570 (GPWG1D)
    RESULTS OF RIGID BODY CHECKS OF MATRIX KGG      (G-SET)  FOLLOW:
    PRINT RESULTS IN ALL SIX DIRECTIONS AGAINST THE LIMIT OF   6.677089E-04
        DIRECTION        STRAIN ENERGY        PASS/FAIL
        ---------        -------------        ---------
          1              2.799884E-08          PASS
          2              3.398598E-08          PASS
          3              1.153208E-08          PASS
          4              2.332561E-07          PASS
          5              1.270334E-06          PASS
          6              7.235915E-08          PASS
```

*** USER INFORMATION MESSAGE 7570 (GPWG1D)
RESULTS OF RIGID BODY CHECKS OF MATRIX KNN (N-SET) FOLLOW:
PRINT RESULTS IN ALL SIX DIRECTIONS AGAINST THE LIMIT OF 2.146869E-02

DIRECTION	STRAIN ENERGY	PASS/FAIL
1	2.619139E-08	PASS
2	1.340596E-07	PASS
3	3.348563E-07	PASS
4	2.515335E-07	PASS
5	4.130582E-06	PASS
6	5.533204E-06	PASS

*** USER INFORMATION MESSAGE 7570 (GPWG1D)
RESULTS OF RIGID BODY CHECKS OF MATRIX KFF (F-SET) FOLLOW:
PRINT RESULTS IN ALL SIX DIRECTIONS AGAINST THE LIMIT OF 2.146869E-02

DIRECTION	STRAIN ENERGY	PASS/FAIL
1	2.619139E-08	PASS
2	1.340596E-07	PASS
3	3.348563E-07	PASS
4	2.515335E-07	PASS
5	4.130582E-06	PASS
6	5.533204E-06	PASS

*** USER INFORMATION MESSAGE 7570 (GPWG1D)
RESULTS OF RIGID BODY CHECKS OF MATRIX KAA1 (A-SET) FOLLOW:
PRINT RESULTS IN ALL SIX DIRECTIONS AGAINST THE LIMIT OF 2.146869E-02

DIRECTION	STRAIN ENERGY	PASS/FAIL
1	2.619139E-08	PASS
2	1.340596E-07	PASS
3	3.348563E-07	PASS
4	2.515335E-07	PASS
5	4.130582E-06	PASS
6	5.533204E-06	PASS

A further check is done for the rigid body modes. The first 8 unconstrained modes are shown below. There are six rigid body modes (~ 0.0), and then good separation with the first non-rigid body mode.

Table 5.12.1-4: Eigenvalue Summary of Handle Bracket -303

REAL EIGENVALUES						
MODE NO.	EXTRACTION ORDER	EIGENVALUE	RADIANS	CYCLES	GENERALIZED MASS	GENERALIZED STIFFNESS
1	1	-1.84E-04	1.36E-02	2.16E-03	1.00E+00	-1.84E-04
2	2	-1.26E-04	1.12E-02	1.79E-03	1.00E+00	-1.26E-04
3	3	-1.04E-04	1.02E-02	1.62E-03	1.00E+00	-1.04E-04
4	4	1.74E-04	1.32E-02	2.10E-03	1.00E+00	1.74E-04
5	5	2.48E-04	1.57E-02	2.50E-03	1.00E+00	2.48E-04
6	6	7.01E-04	2.65E-02	4.21E-03	1.00E+00	7.01E-04
7	7	1.12E+08	1.06E+04	1.69E+03	1.00E+00	1.12E+08
8	8	2.05E+08	1.43E+04	2.28E+03	1.00E+00	2.05E+08

Material and Temperature

The Handle Bracket -303 is made from 6061-T651 Aluminum Alloy. Material properties are taken from MMPDS-01 (see page 5.12.1-18). Temperature limits are -47° F to 139° F, as defined in Appendix C2 (on-orbit case).

Analysis Approach

The Handle Bracket -303 is designed to withstand loads as determined by testing done at Johnson Space Center Static Test Lab during January 2004.

Four different critical load cases are considered, which are selected by engineering judgment from Reference 1,Table 9, page 29 (see also Table 5.12.1-3). The loads are input in the FEM and the recovered stresses are compared to the ultimate and yield stresses of 6061-T651 Aluminum Alloy, corrected for the maximum temperature of 139º F. All Margins of Safety are positive.

Handle Bracket Assembly, part SDG39135878-301/-307

The load cases for these brackets are identical with the load cases for Handle Bracket -303. A FE model of the Handle Bracket -301/-307 is built using I-DEAS software. The predicted stresses for these brackets are much lower than the stresses presented above for the Handle Bracket -303. Therefore, by engineering judgment, it is concluded that the Margins of Safety are comparatively higher and no further analysis is done for these Handle Brackets.

Handle Bracket Assembly, part SDG39135878-305

Location of Handle Bracket -305

Figure 5.12.1-4 below shows a typical location of the Handle Bracket -305 on the USS-02 Assembly.

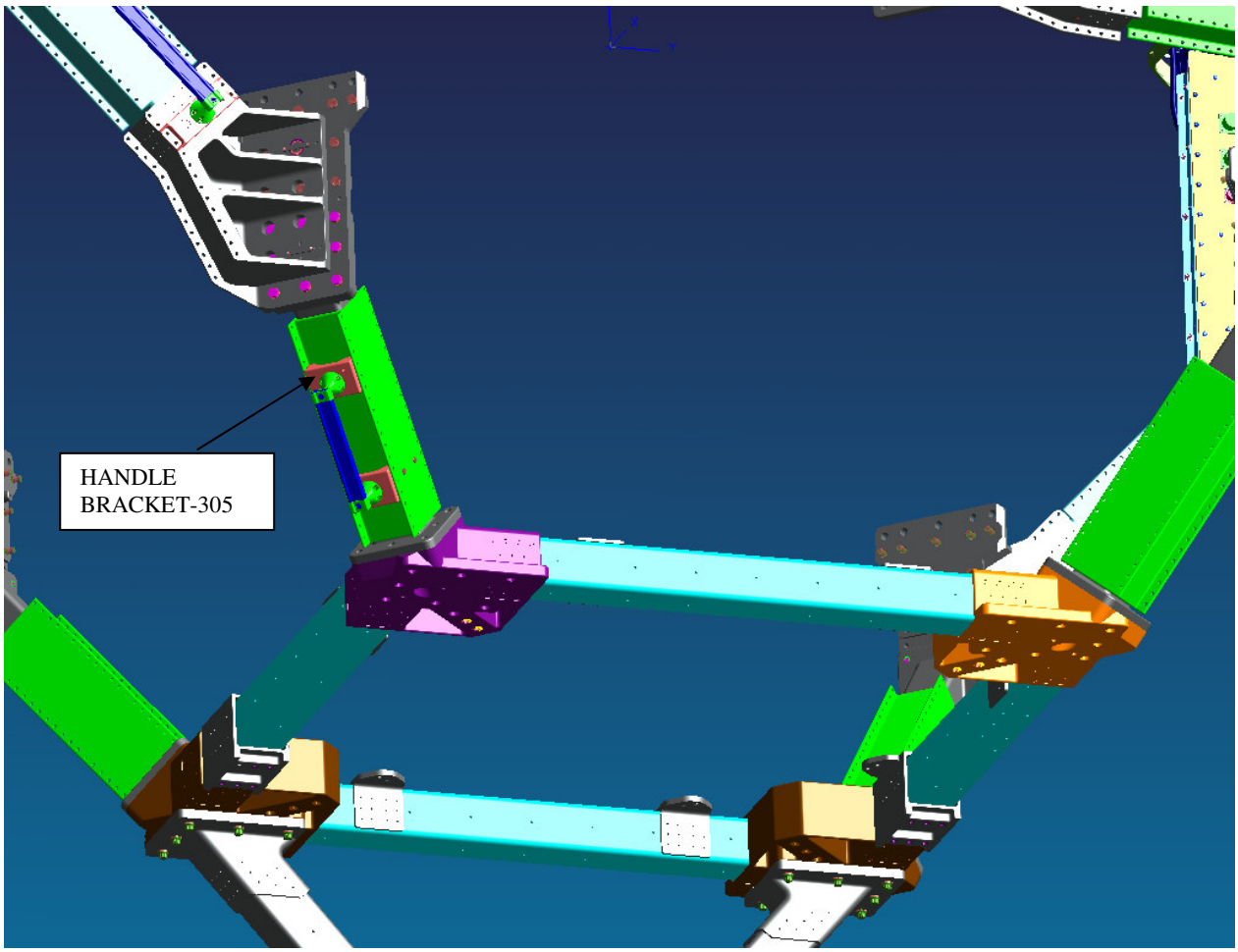

Figure 5.12.1-4: Typical Location of Handle Bracket -305 on USS-02 Assembly

Handle Bracket -305 Load Cases

The Handle Bracket -305 load cases are presented in Reference 1 – Results of Handrail Interface Force Testing. Table 10, on page 30, summarized these cases and is presented below.

Table 10: Interface Forces, Top Mounted Short Handrails (SEG33106347-833 and –861[2])

Load Case	End	Measured (at handrail interface, pounds force and inch-pounds)						RSS	
		Fx	Fy	Fz	Mx	My	Mz	Force	Moment
1	Left	10	0	146	13	-2	11	147	17
	Right	-13	-1	76	4	-20	0	77	21
2	Left	-2	160	-3	-394	-8	12	160	395
	Right	-4	58	-1	-155	-3	-13	58	156
3	Left	-3	3	39	186	-9	7	39	186
	Right	2	-1	11	102	3	13	11	103
4	Left	-2	31	-8	-272	19	8	32	273
	Right	0	18	5	-163	11	-7	18	164
5	Left	0	-3	91	9	-3	6	91	11
	Right	7	-2	-26	11	12	4	27	17
6	Left	6	2	171	3	-11	6	171	13
	Right	-8	-1	51	-11	-11	-6	52	16
7	Left	4	147	-2	-374	3	23	147	375
	Right	-1	70	-2	-179	3	-11	70	180
8	Left	219	9	1	-30	485	-61	219	490
	Right	3	-5	-5	9	5	1	8	10
9	Left	2	-98	-1	271	-8	-15	98	272
	Right	-1	-6	-1	14	1	-3	6	15
10	Left	-3	-148	-7	523	-29	148	148	545
	Right	4	56	0	-110	12	3	56	111
11	Left	9	-23	0	149	62	33	25	165
	Right	0	5	-1	-9	3	2	5	10
Max		219	160	171	523	485	148	219	545
Min		-13	-148	-26	-394	-29	-61	5	10
Absolute Value Max		219	160	171	523	485	148	219	545

The worst cases are selected by engineering judgment and are presented in Table 5.12.1-5 below.

Table 5.12.1-5: Worst Load Cases Summary for Handle Bracket -305

Load Case	Rail End	Fx	Fy	Fz	Mx	My	Mz
2	Left	-2	160	-3	-394	-8	12
6	Left	6	2	171	3	-11	6
8	Left	219	9	1	-30	485	-61
10	Left	-3	-148	-7	523	-29	148

The coordinate system associated with these loads is as per Reference 1, and is shown in Figure 5.12.1-5.

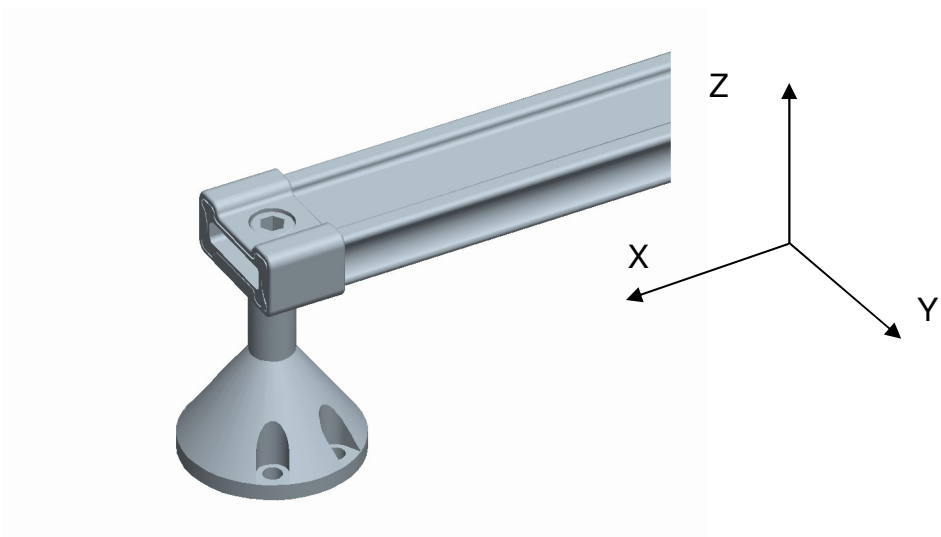

Figure 5.12.1-5: Loads Coordinate System

Figure 5.12.1-6 below shows the configuration of the Handle Bracket -305 with the Rail Post mounted on it and the system coordinate system.

Please note that this coordinate system is as per ProE model and I-DEAS FE model and is different than the above coordinate system (X and Y directions are reversed).

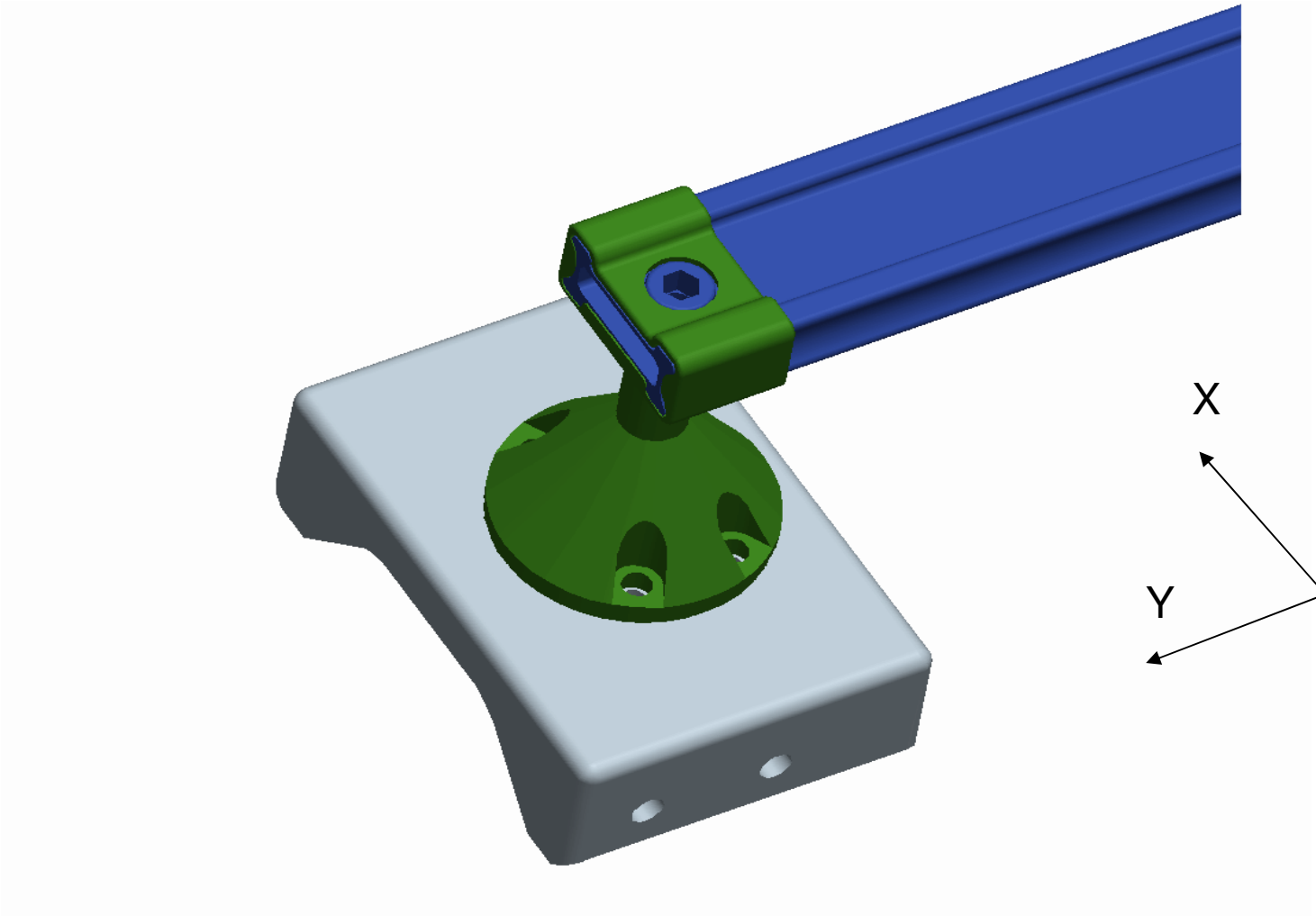

Figure 5.12.1-6: Handle Bracket-305 and Rail Post Assembly Configuration

Description of Model

A FE model of the Handle Bracket -305 is built using I-DEAS software.

9. The Handle Bracket is modeled using solid parabolic tetrahedral elements. These elements are best suited for complex and uneven geometry. The number of elements are selected based on the maximum unaveraged and averaged results in the critical area, such that convergence of results is achieved.
10. At the bolt holes, rigid elements are used to represent the bolt connections.
11. The model is constrained with DOF's 1-3 at four bolt locations.
12. Four load cases are applied selected by engineering judgment from Reference 1, Table 10, page 30 and presented in Table 5.12.1-5. Please note that the ProE and I-DEAS models have a coordinate system different than the coordinate system shown in Reference 1 (see Figures 5.12.1-5 and 5.12.1-6 and note that X and Y directions are reversed). The FE model accounts for the difference in the two coordinate systems and inputs the loads accordingly.
13. The loads are applied at the top of the Bracket, as specified in Reference 1, using rigid elements that represent the four bolts and inserts. These elements connect the central Post bottom surface to the top face of the Bracket.
14. I-DEAS solver is used for analyzing the complete math model of the Handle Bracket. See page 5.12.1-35 for the FE model of the Handle Bracket.
15. I-DEAS is used to sort out the maximum of Principal, Von-Mises, and Shear stresses (see Appendix A19).
16. The FE model is checked using MSC/NASTRAN.

Model Checks

The quality of the model mesh was checked in I-DEAS for distortions and streches of elements. The distortion and strech filter is set at a treshhold of 0.1. All elements passed the criteria.

Rigid body checks are performed using MSC/NASTRAN. Results are shown below. The KGG, KNN and KFF matrices all pass with low strain energies.

*** USER INFORMATION MESSAGE 7570 (GPWG1D)
RESULTS OF RIGID BODY CHECKS OF MATRIX KGG (G-SET) FOLLOW:
PRINT RESULTS IN ALL SIX DIRECTIONS AGAINST THE LIMIT OF 8.320577E-04

DIRECTION	STRAIN ENERGY	PASS/FAIL
1	8.197907E-08	PASS
2	4.209781E-08	PASS
3	3.591731E-08	PASS
4	1.356846E-08	PASS
5	5.983033E-07	PASS
6	9.964705E-07	PASS

*** USER INFORMATION MESSAGE 7570 (GPWG1D)
RESULTS OF RIGID BODY CHECKS OF MATRIX KNN (N-SET) FOLLOW:
PRINT RESULTS IN ALL SIX DIRECTIONS AGAINST THE LIMIT OF 2.166578E-02

DIRECTION	STRAIN ENERGY	PASS/FAIL
1	1.707969E-08	PASS
2	4.560937E-08	PASS
3	5.069541E-08	PASS
4	1.246116E-07	PASS
5	3.933008E-08	PASS
6	4.100027E-07	PASS

*** USER INFORMATION MESSAGE 7570 (GPWG1D)
RESULTS OF RIGID BODY CHECKS OF MATRIX KFF (F-SET) FOLLOW:
PRINT RESULTS IN ALL SIX DIRECTIONS AGAINST THE LIMIT OF 2.166578E-02

DIRECTION	STRAIN ENERGY	PASS/FAIL
1	1.707969E-08	PASS
2	4.560937E-08	PASS
3	5.069541E-08	PASS
4	1.246116E-07	PASS
5	3.933008E-08	PASS
6	4.100027E-07	PASS

*** USER INFORMATION MESSAGE 7570 (GPWG1D)
RESULTS OF RIGID BODY CHECKS OF MATRIX KAA1 (A-SET) FOLLOW:
PRINT RESULTS IN ALL SIX DIRECTIONS AGAINST THE LIMIT OF 2.166578E-02

DIRECTION	STRAIN ENERGY	PASS/FAIL
1	1.707969E-08	PASS
2	4.560937E-08	PASS
3	5.069541E-08	PASS

4	1.246116E-07	PASS
5	3.933008E-08	PASS
6	4.100027E-07	PASS

A further check is done for the rigid body modes. The first 8 unconstrained modes are shown below. There are six rigid body modes (~ 0.0), and then good separation with the first non-rigid body mode.

Table 5.12.1-6: Eigenvalue Summary of Handle Bracket -305

REAL EIGENVALUES						
Mode NO.	Extraction Order	Eigenvalue	Radians	Cycles	Generalized Mass	Generalized Stiffness
1	1	-1.95E-04	1.39E-02	2.22E-03	1.00E+00	-1.95E-04
2	2	-1.69E-04	1.30E-02	2.07E-03	1.00E+00	-1.69E-04
3	3	-1.31E-04	1.15E-02	1.82E-03	1.00E+00	-1.31E-04
4	4	5.31E-05	7.29E-03	1.16E-03	1.00E+00	5.31E-05
5	5	1.03E-04	1.01E-02	1.61E-03	1.00E+00	1.03E-04
6	6	2.76E-04	1.66E-02	2.64E-03	1.00E+00	2.76E-04
7	7	1.01E+09	3.17E+04	5.05E+03	1.00E+00	1.01E+09
8	8	1.20E+09	3.46E+04	5.51E+03	1.00E+00	1.20E+09

Material and Temperature

The Handle Bracket -305 is made from 6061-T651 Aluminum Alloy. Material properties are taken from MMPDS-01 (see page 5.12.1-31). Temperature limits are -47° F to 139° F, as defined in Appendix C2 (on-orbit case).

Analysis Approach

The Handle Bracket -305 is designed to withstand loads as determined by testing done at Johnson Space Center Static Test Lab during January 2004.

Four different critical load cases are considered, which are selected by engineering judgment from Reference 1,Table 10, page 30 (see also Table 5.12.1-5). The loads are input in the FEM and the recovered stresses are compared to the ultimate and yield stresses of 6061-T651 Aluminum Alloy, corrected for the maximum temperature of 139º F. All Margins of Safety are positive.

MARGINS OF SAFETY FOR HANDLE BRACKET -303

The load cases are presented in Reference 1, Table 9, page 29 and summarized in Table 5.12.1-3 (see page 5.12.1-6).
The worst cases are determined by engineering judgement and they are:

Load Case 1 - Left
Load Case 1 - Right
Load Case 7 - Left
Load Case 8 - Left

The Bracket restraint points are shown in the picture on page 5.12.1-20
The loads application point is shown in the picture on page 5.12.1-21

The loads are input in the FEM and the stresses are recovered and presented in Appendix A19.

See pages A19-3, A19-5, A19-7, and A19-9 for maximum values.

$$maxU := \begin{pmatrix} 16190 \\ 19380 \\ 11890 \\ 16570 \end{pmatrix} \cdot psi \qquad maxY := \begin{pmatrix} 16210 \\ 18000 \\ 11650 \\ 14920 \end{pmatrix} \cdot psi \qquad maxS := \begin{pmatrix} 8778 \\ 9782 \\ 5942 \\ 8514 \end{pmatrix} \cdot psi$$

$i := 1..4$

Material properties: 6061-T651 Aluminum Alloy, AMS-QQ-A-250/11

From MMPDS-01, Table 3.6.2.0(b2) for thickness of 0.25 inch to 2.00 inch

$Ftu := 42000psi \qquad Fty := 35000psi \qquad Fsu := 27000psi$

$f_{tu} := 0.96$

$f_{ty} := 0.96$

Temperature correction factors for 139 deg F, from MMPDS-01, Figure 3.6.2.2.1(a) and (b)
Temperature are defined in Appendix C2.

$Ftu := f_{tu} \cdot Ftu \qquad Ftu = 40320\,psi$

$Fty := f_{ty} \cdot Fty \qquad Fty = 33600\,psi$

$Fsu := f_{tu} \cdot Fsu \qquad Fsu = 25920\,psi$

Factors of Safety:

$FSu := 2.0 \qquad FSy := 1.25$

Margins of Safety:

$$MSu_i := \frac{Ftu}{FSu \cdot maxU_i} - 1 \qquad MSu = \begin{pmatrix} 0.245 \\ 0.04 \\ 0.696 \\ 0.217 \end{pmatrix}$$

$$MSy_i := \frac{Fty}{FSy \cdot maxY_i} - 1 \qquad MSy = \begin{pmatrix} 0.658 \\ 0.493 \\ 1.307 \\ 0.802 \end{pmatrix}$$

$$MSs_i := \frac{Fsu}{FSu \cdot maxS_i} - 1 \qquad MSs = \begin{pmatrix} 0.476 \\ 0.325 \\ 1.181 \\ 0.522 \end{pmatrix}$$

MARGINS OF SAFETY FOR HANDLE BRACKET -303

$MSu := \min(MSu)$	$MSu = 0.04$	Ultimate - using principal - Load Case 1 - Right
$MSy := \min(MSy)$	$MSy = 0.493$	Yield - using Von-Mises - Load Case 1 - Right
$MSs := \min(MSs)$	$MSs = 0.325$	Shear - using shear - Load Case 1 - Right

See the location of maximum stresses on the stress plots on pages 5.12.1-23 to 5.12.1-30.

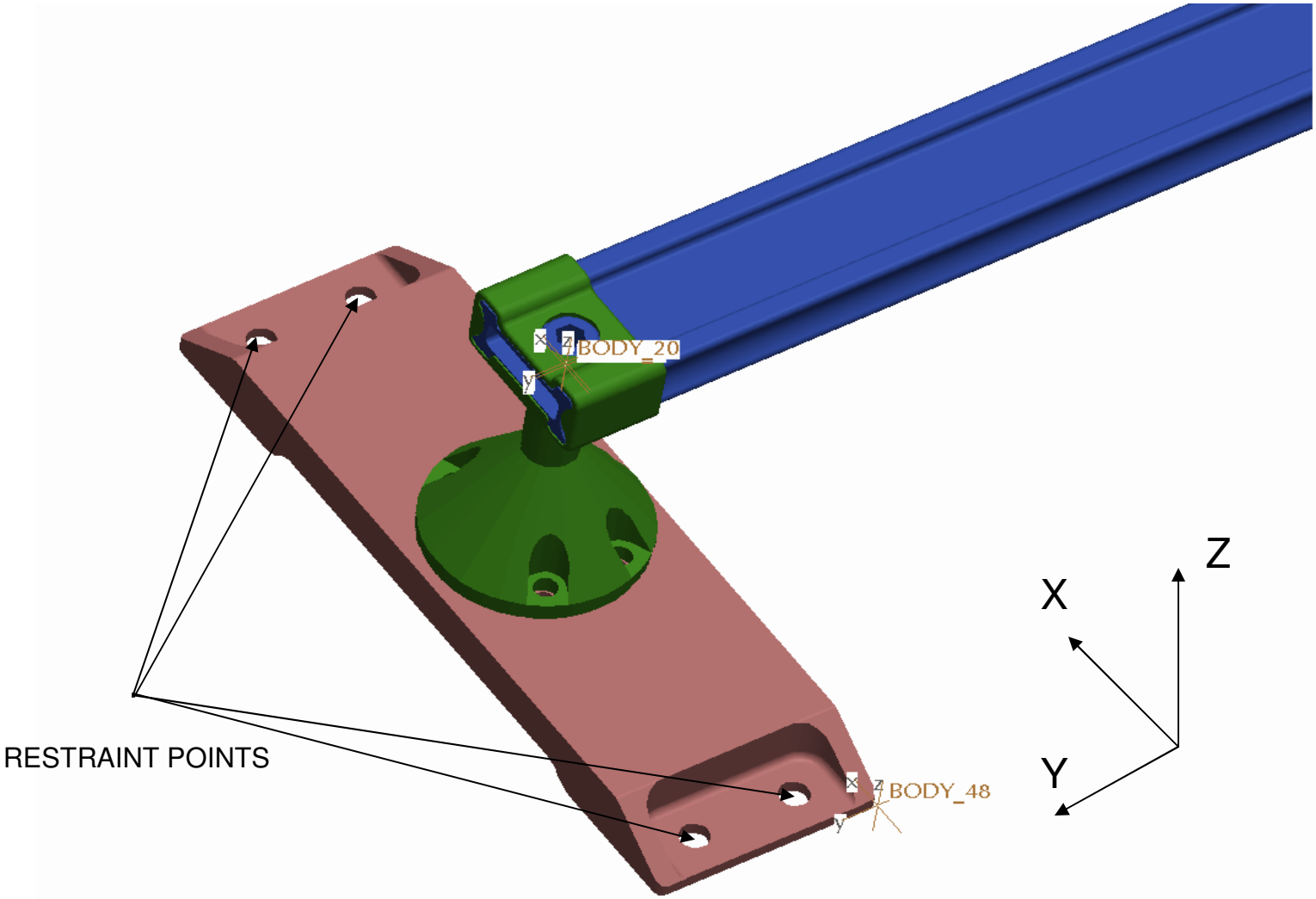

HANDLE BRACKET-303 AND RAIL POST ASSEMBLY

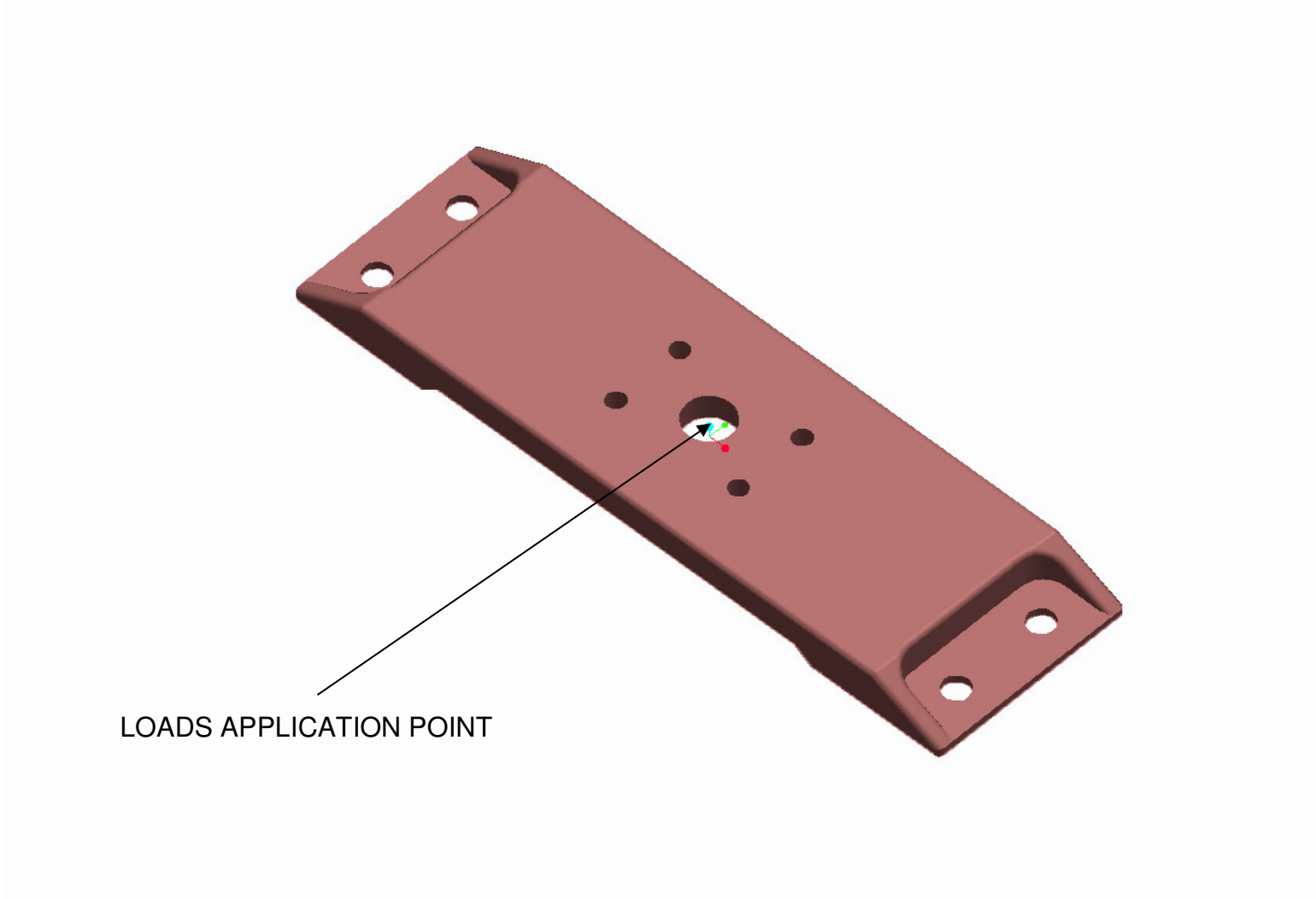

HANDLE BRACKET SDG39135878-303

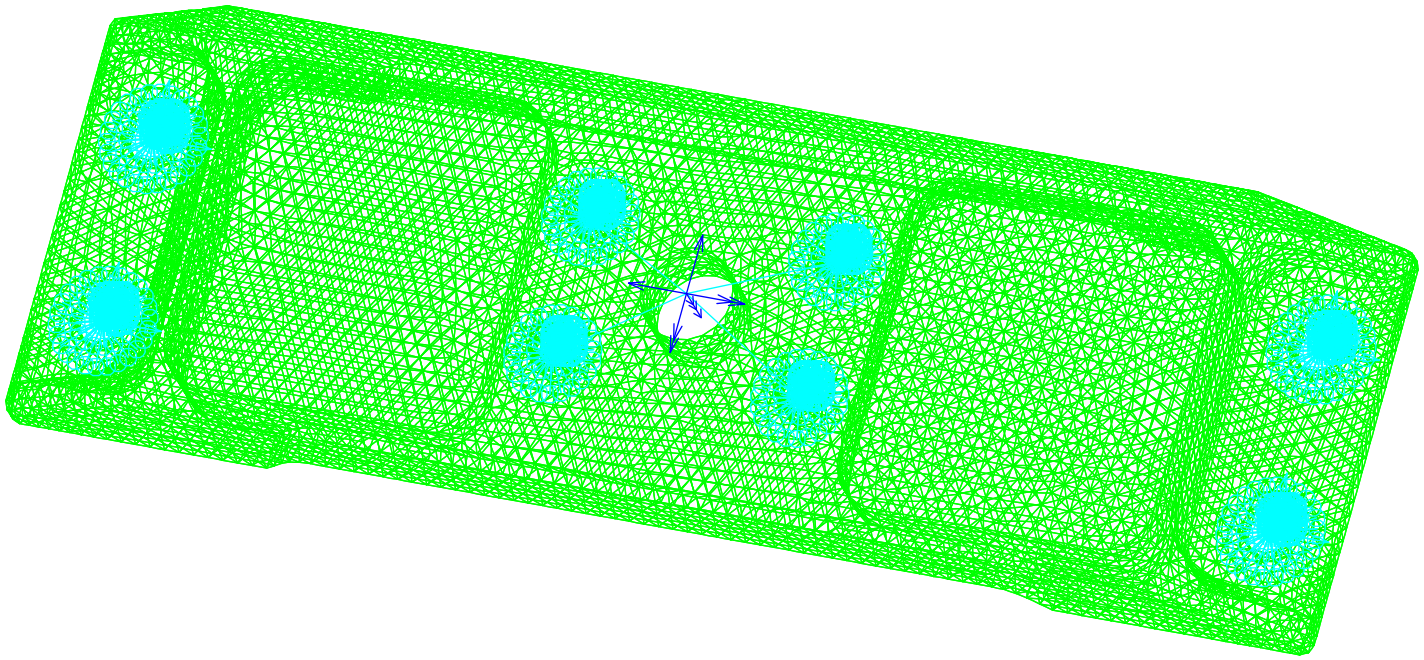

FE MODEL OF HANDLE BRACKET-303

C:\temp\Handle_Bracket.mf1

RESULTS: 3- B.C. 1.STRESS_3.CASE 1 LEFT
STRESS - MAX PRIN MIN:-2.33E+03 MAX: 1.62E+04
FRAME OF REF: PART

VALUE OPTION:ACTUAL

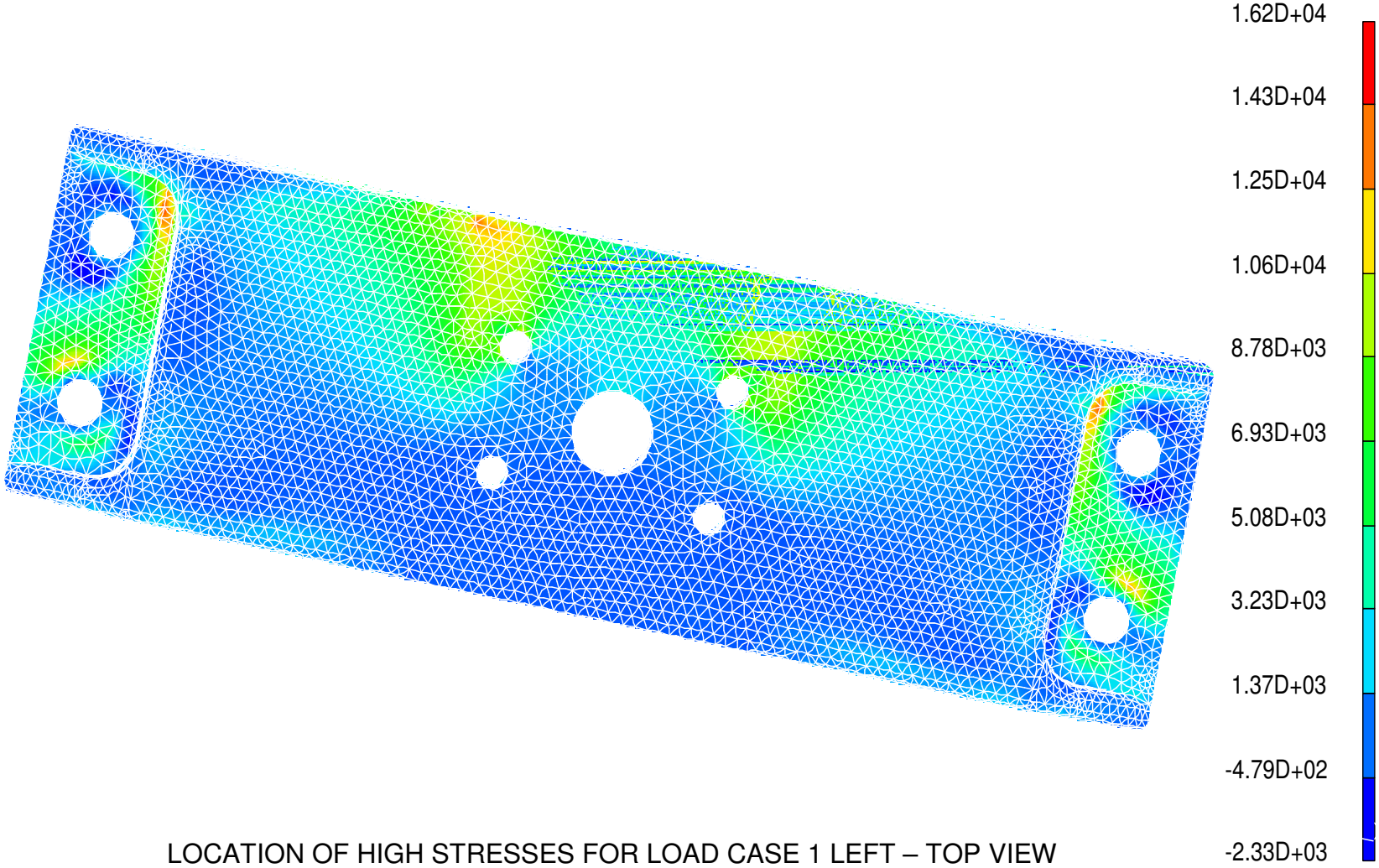

LOCATION OF HIGH STRESSES FOR LOAD CASE 1 LEFT – TOP VIEW

C:\temp\Handle_Bracket.mf1

RESULTS: 3- B.C. 1,STRESS_3,CASE 1 LEFT
STRESS - MAX PRIN MIN:-2.33E+03 MAX: 1.62E+04
FRAME OF REF: PART

VALUE OPTION:ACTUAL

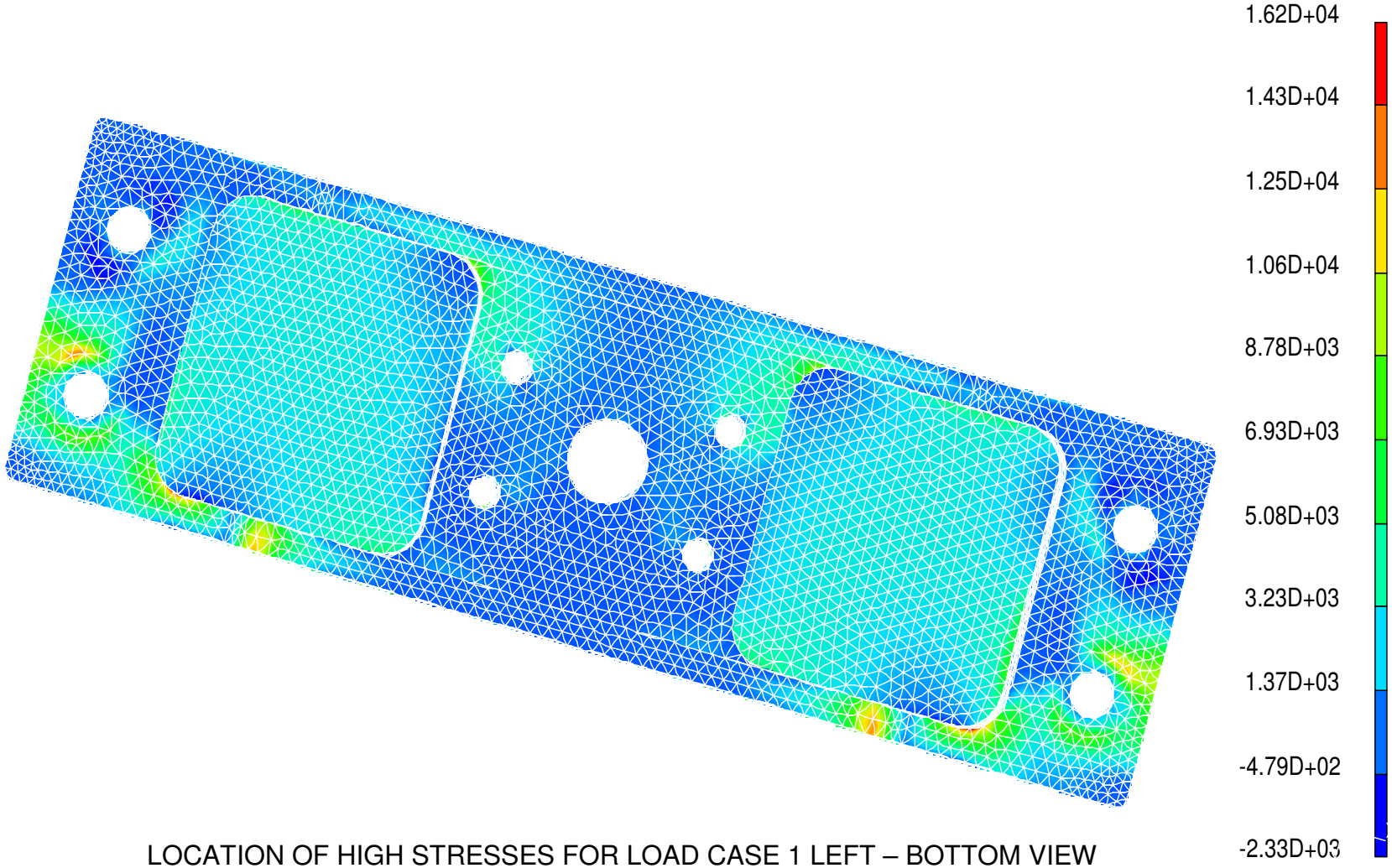

LOCATION OF HIGH STRESSES FOR LOAD CASE 1 LEFT – BOTTOM VIEW

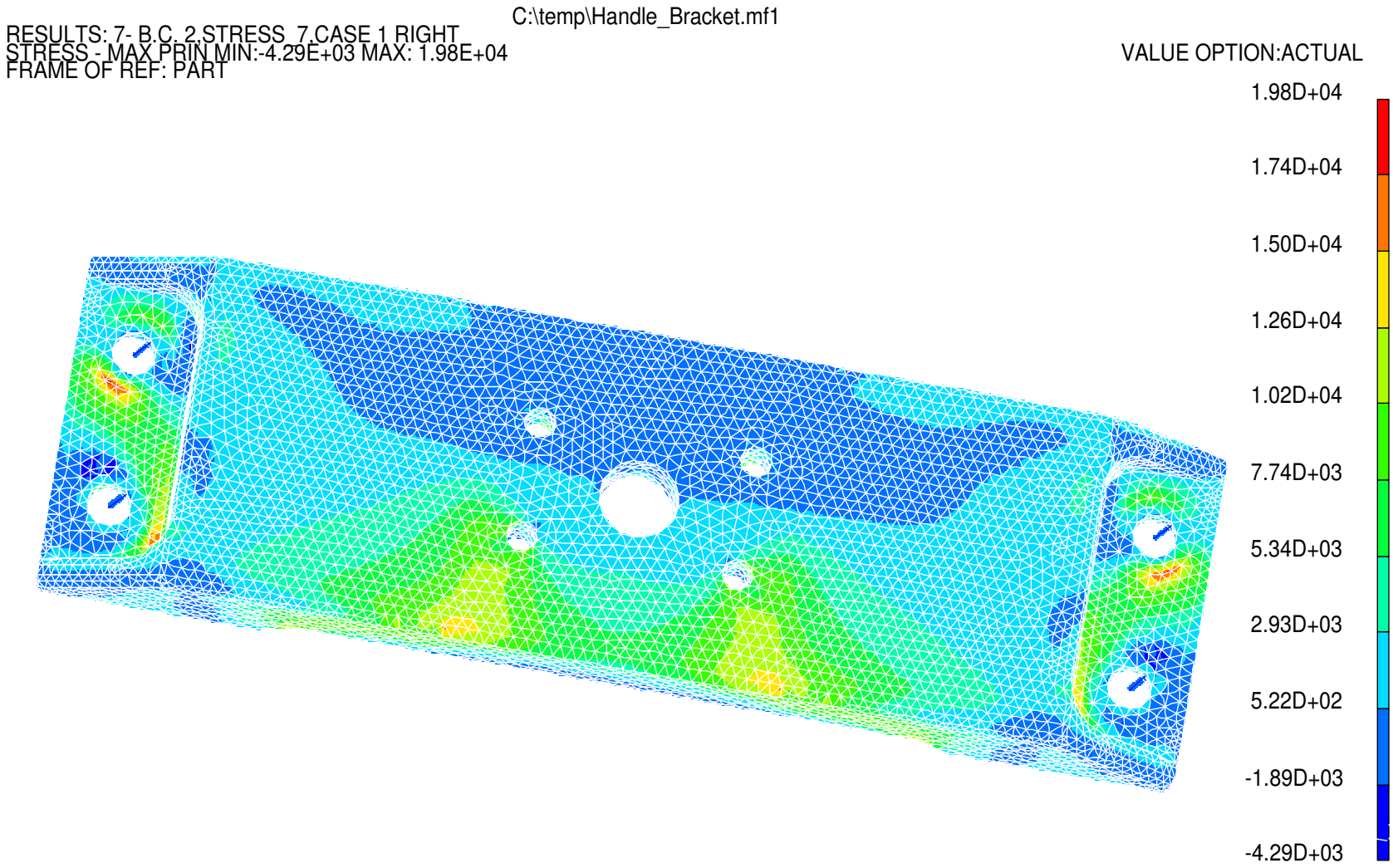

LOCATION OF HIGH STRESSES FOR LOAD CASE 1 RIGHT – TOP VIEW

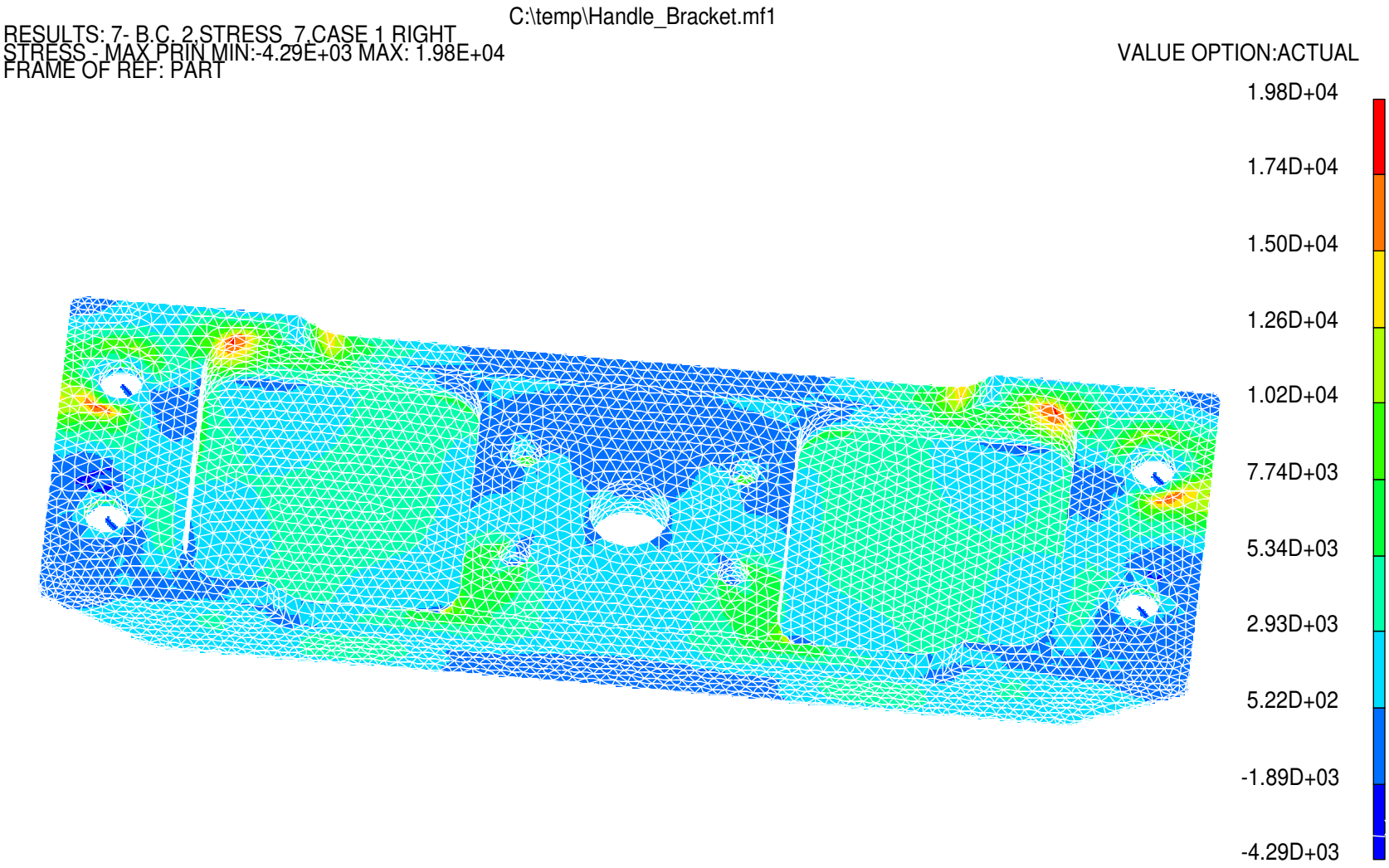

LOCATION OF HIGH STRESSES FOR LOAD CASE 1 RIGHT – BOTTOM VIEW

C:\temp\Handle_Bracket.mf1

RESULTS: 11- B.C. 3,STRESS_11,CASE 7 LEFT
STRESS - MAX PRIN MIN:-3.61E+03 MAX: 1.28E+04
FRAME OF REF: PART

VALUE OPTION:ACTUAL

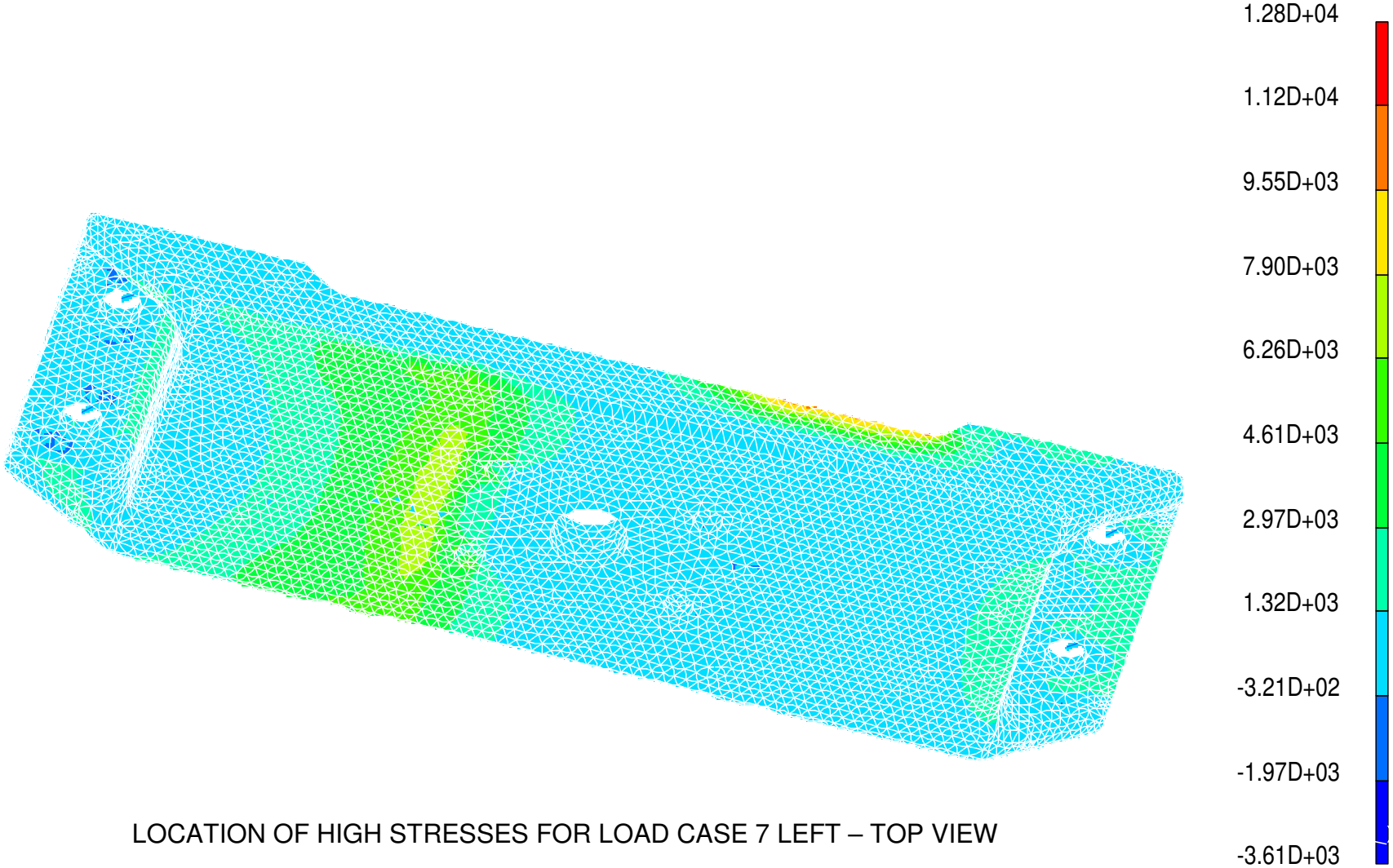

LOCATION OF HIGH STRESSES FOR LOAD CASE 7 LEFT – TOP VIEW

C:\temp\Handle_Bracket.mf1

RESULTS: 11- B.C. 3,STRESS_11,CASE 7 LEFT
STRESS - MAX PRIN MIN:-3.61E+03 MAX: 1.28E+04
FRAME OF REF: PART

VALUE OPTION:ACTUAL

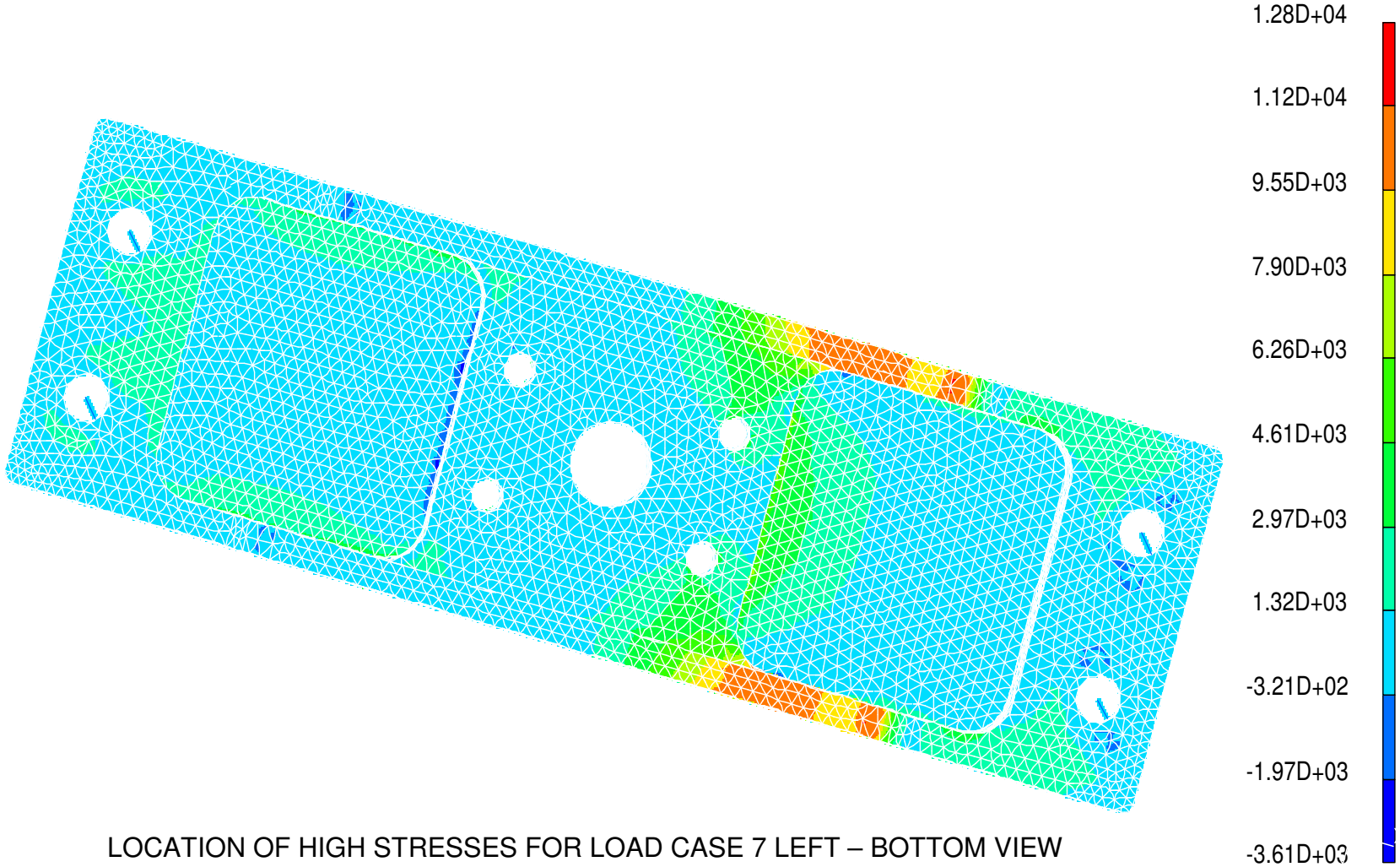

LOCATION OF HIGH STRESSES FOR LOAD CASE 7 LEFT – BOTTOM VIEW

C:\temp\Handle_Bracket.mf1

RESULTS: 15- B.C. 4,STRESS_15,CASE 8 LEFT
STRESS - MAX PRIN MIN:-4.12E+03 MAX: 1.70E+04
FRAME OF REF: PART

VALUE OPTION:ACTUAL

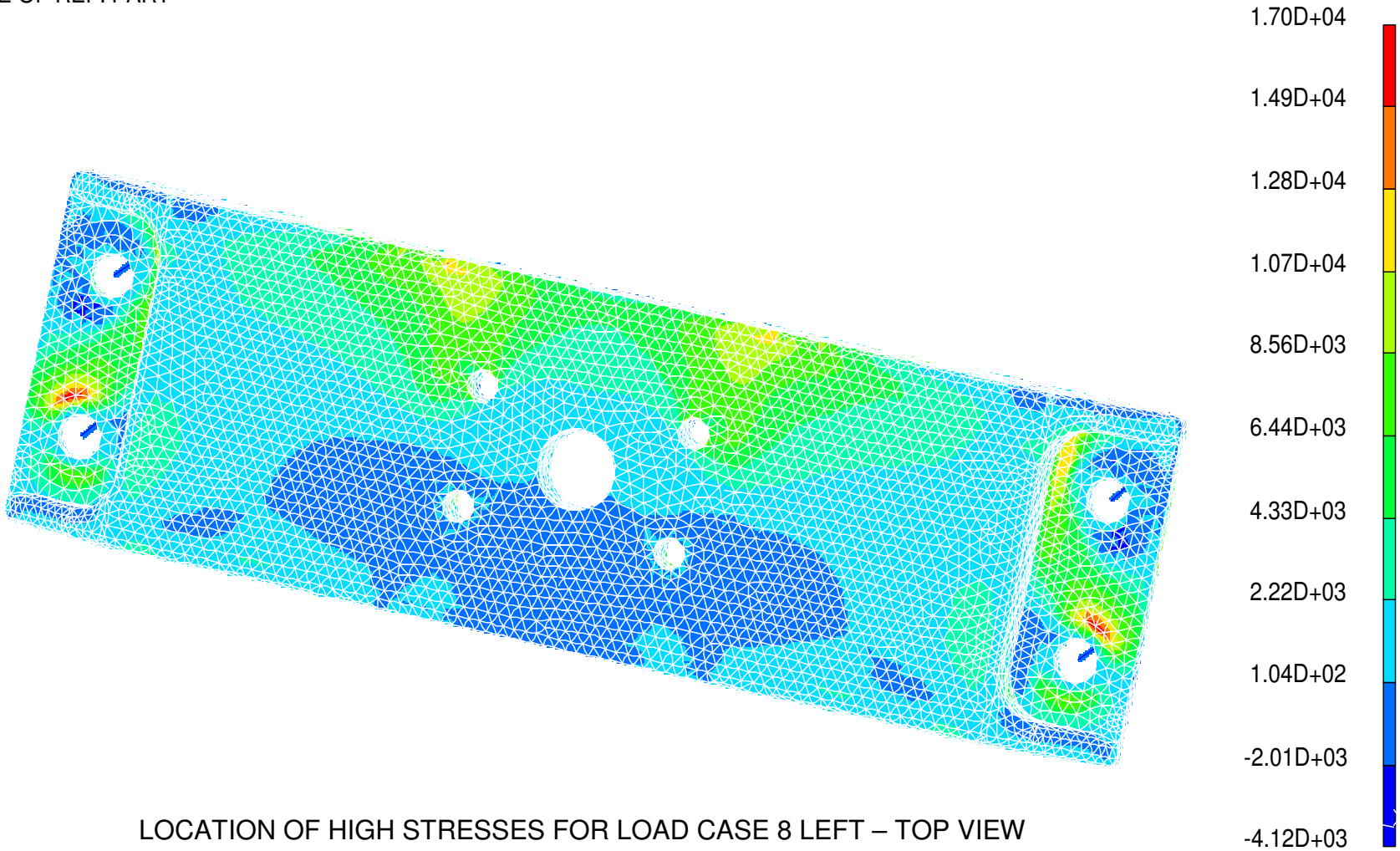

LOCATION OF HIGH STRESSES FOR LOAD CASE 8 LEFT – TOP VIEW

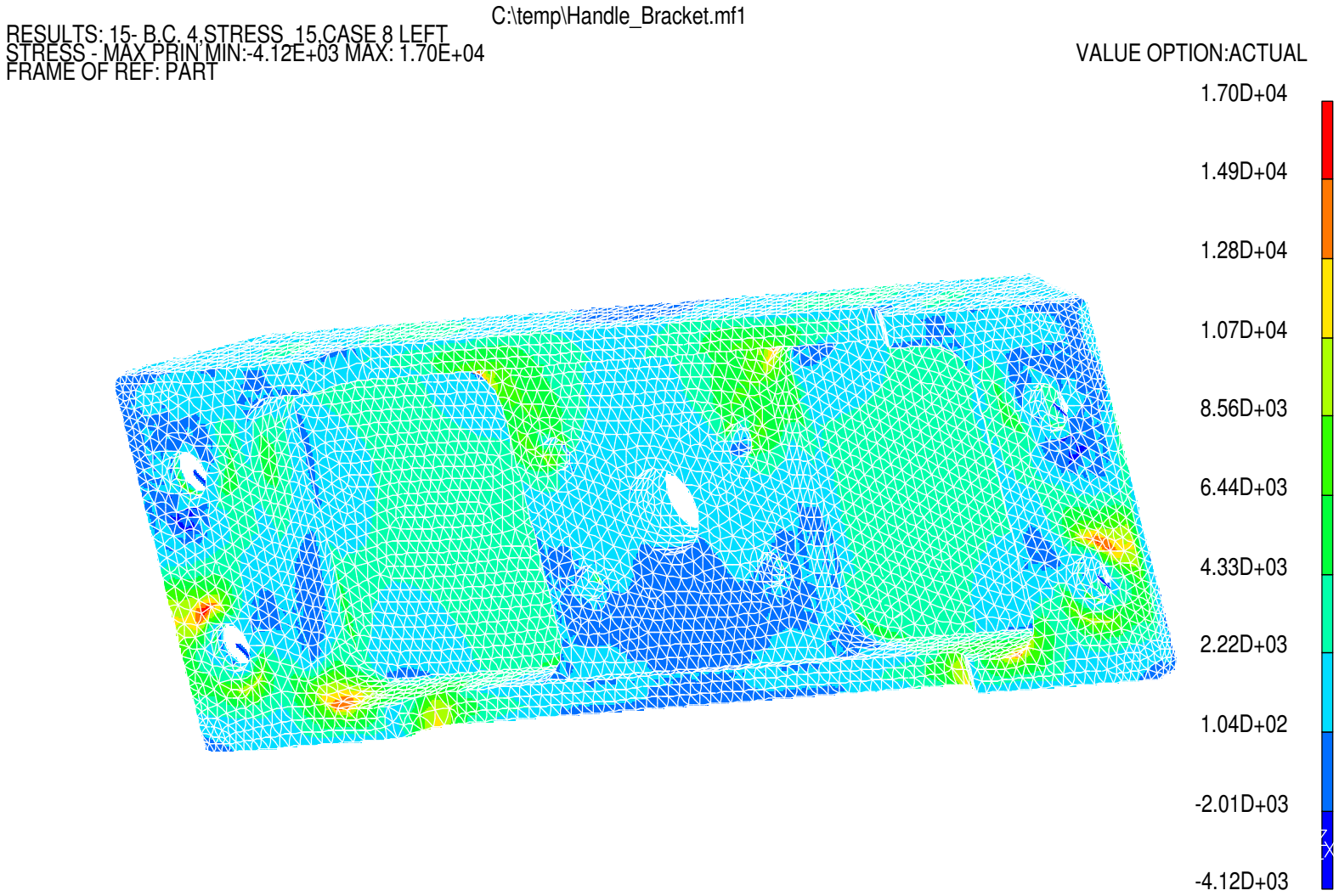

LOCATION OF HIGH STRESSES FOR LOAD CASE 8 LEFT – BOTTOM VIEW

MARGINS OF SAFETY FOR HANDLE BRACKET -305

The load cases are presented in Reference 1, Table 10, page 30 and summarized in Table 5.12.1-5 (see page 5.12.1-13).

The worst cases are determined by engineering judgement and they are:

Load Case 2 - Left

Load Case 6 - Left

Load Case 8 - Left

Load Case 10 - Left

The Bracket restraint points are shown in the picture on page 5.12.1-33

The loads application point is shown in the picture on page 5.12.1-34

The loads are input in the FEM and the stresses are recovered and presented in Appendix A19.

See pages A19-15, A19-17, A19-21, and A19-23 for maximum values.

$$maxU := \begin{pmatrix} 11680 \\ 12660 \\ 17420 \\ 16880 \end{pmatrix} \cdot psi \qquad maxY := \begin{pmatrix} 8660 \\ 15880 \\ 23140 \\ 11610 \end{pmatrix} \cdot psi \qquad maxS := \begin{pmatrix} 4417 \\ 9150 \\ 12350 \\ 5936 \end{pmatrix} \cdot psi$$

$i := 1..4$

Material properties: 6061-T651 Aluminum Alloy, AMS-QQ-A-250/11

From MMPDS-01, Table 3.6.2.0(b2) for thickness of 0.25 inch to 2.00 inch

$Ftu := 42000psi \qquad Fty := 35000psi \qquad Fsu := 27000psi$

$f_{tu} := 0.96$

$f_{ty} := 0.96$

Temperature correction factors for 139 deg F, from MMPDS-01, Figure 3.6.2.2.1(a) and (b)

Temperature are defined in Appendix C2.

$Ftu := f_{tu} \cdot Ftu \qquad Ftu = 40320\,psi$

$Fty := f_{ty} \cdot Fty \qquad Fty = 33600\,psi$

$Fsu := f_{tu} \cdot Fsu \qquad Fsu = 25920\,psi$

Factors of Safety:

$FSu := 2.0 \qquad FSy := 1.25$

Margins of Safety:

$$MSu_i := \frac{Ftu}{FSu \cdot maxU_i} - 1 \qquad MSu = \begin{pmatrix} 0.726 \\ 0.592 \\ 0.157 \\ 0.194 \end{pmatrix}$$

$$MSy_i := \frac{Fty}{FSy \cdot maxY_i} - 1 \qquad MSy = \begin{pmatrix} 2.104 \\ 0.693 \\ 0.162 \\ 1.315 \end{pmatrix}$$

$$MSs_i := \frac{Fsu}{FSu \cdot maxS_i} - 1 \qquad MSs = \begin{pmatrix} 1.934 \\ 0.416 \\ 0.049 \\ 1.183 \end{pmatrix}$$

MARGINS OF SAFETY FOR HANDLE BRACKET -305

$MSu := \min(MSu)$	$MSu = 0.157$	Ultimate - using principal - Load Case 8 - Left
$MSy := \min(MSy)$	$MSy = 0.162$	Yield - using Von-Mises - Load Case 8 - Left
$MSs := \min(MSs)$	$MSs = 0.049$	Shear - using shear - Load Case 8 - Left

See the location of maximum stresses on the stress plots on pages 5.12.1-36 to 5.12.1-39.

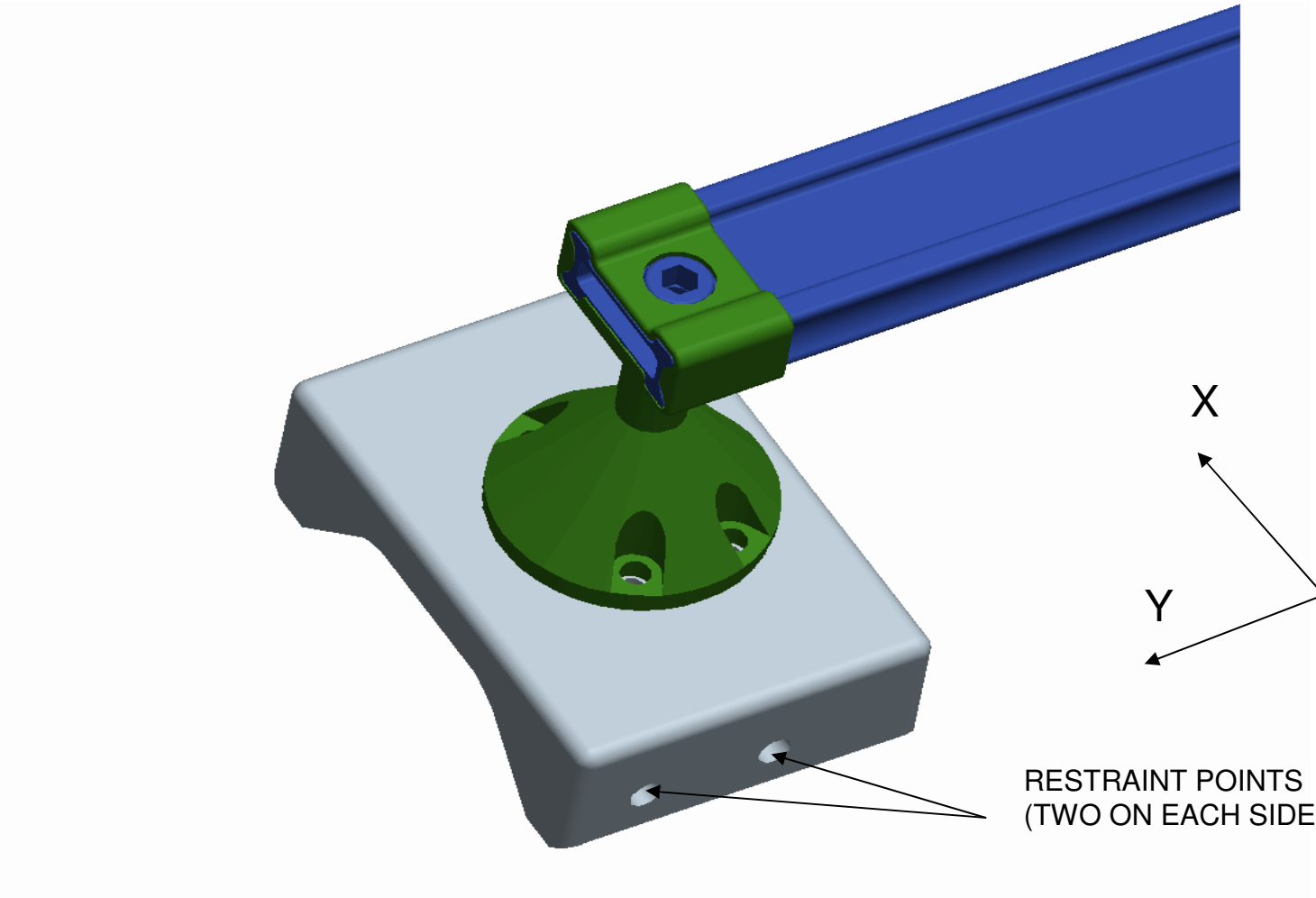

HANDLE BRACKET-305 AND RAIL POST ASSEMBLY

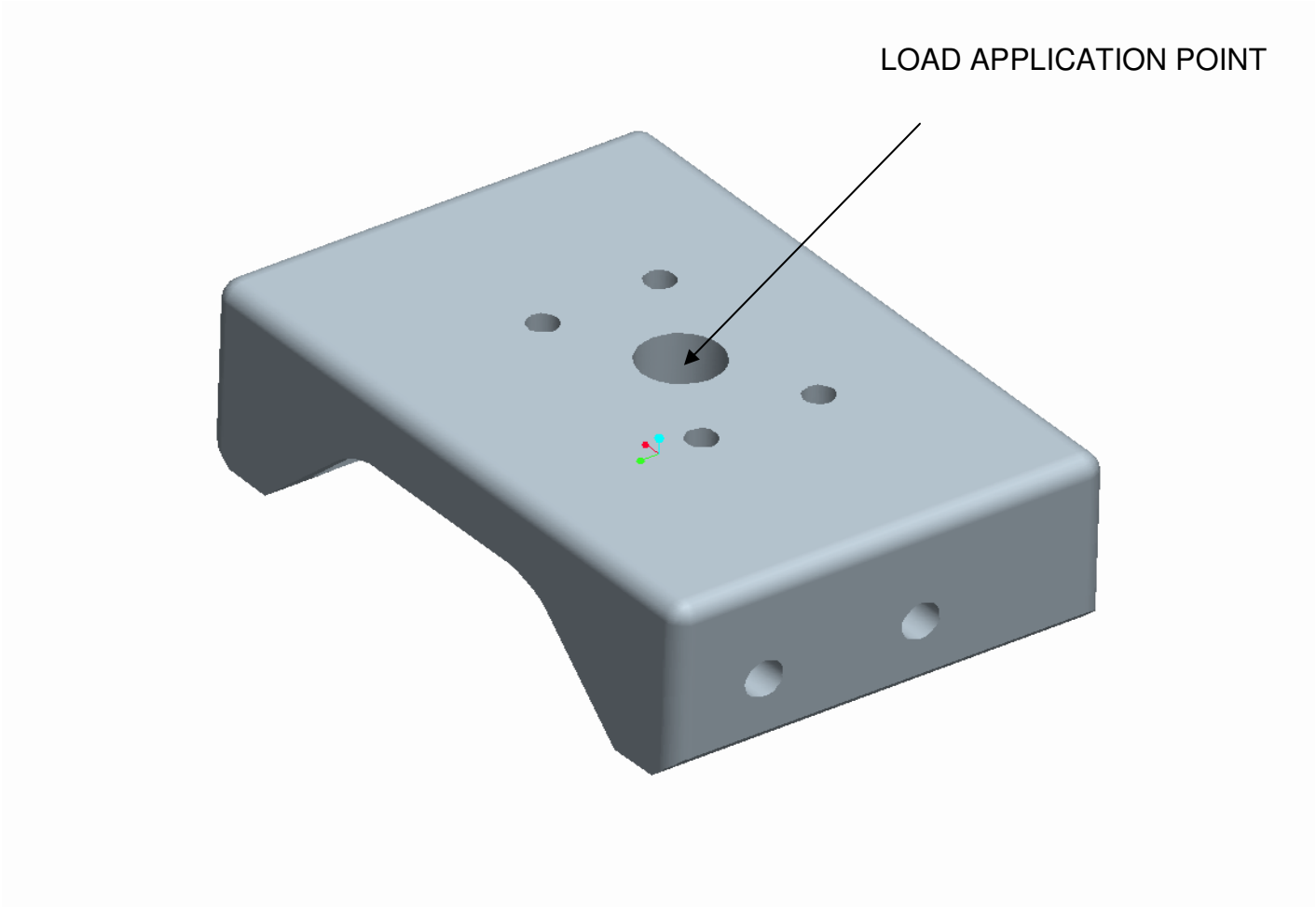

HANDLE BRACKET SDG39135878-305

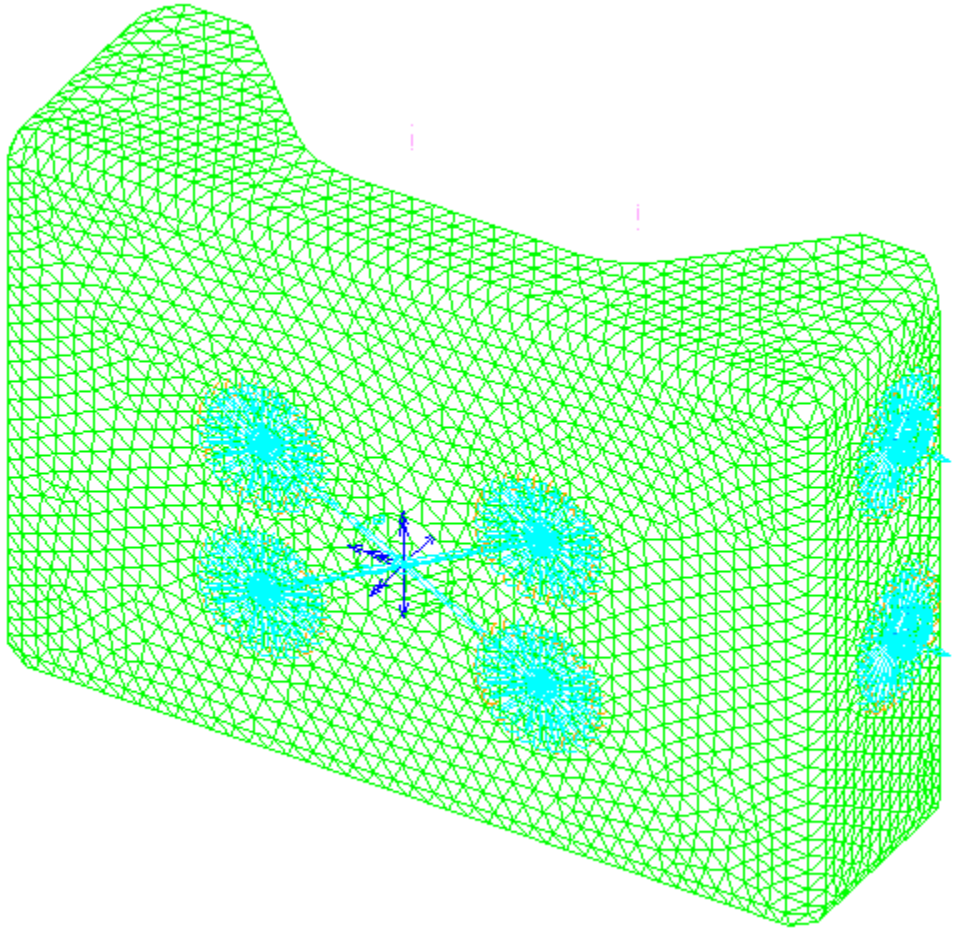

FE MODEL OF HANDLE BRACKET-305

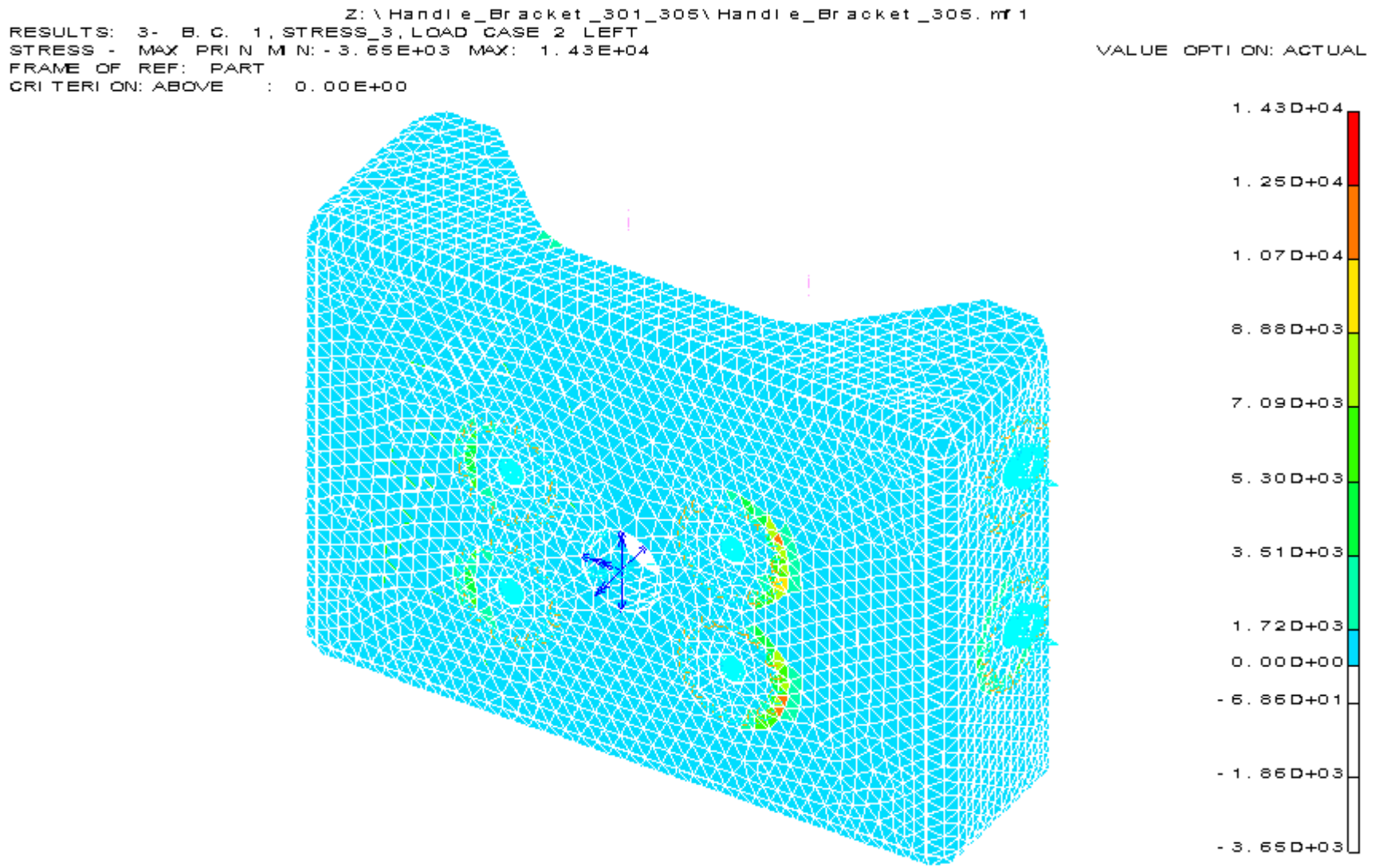

LOCATION OF HIGH STRESSES FOR LOAD CASE 2 LEFT

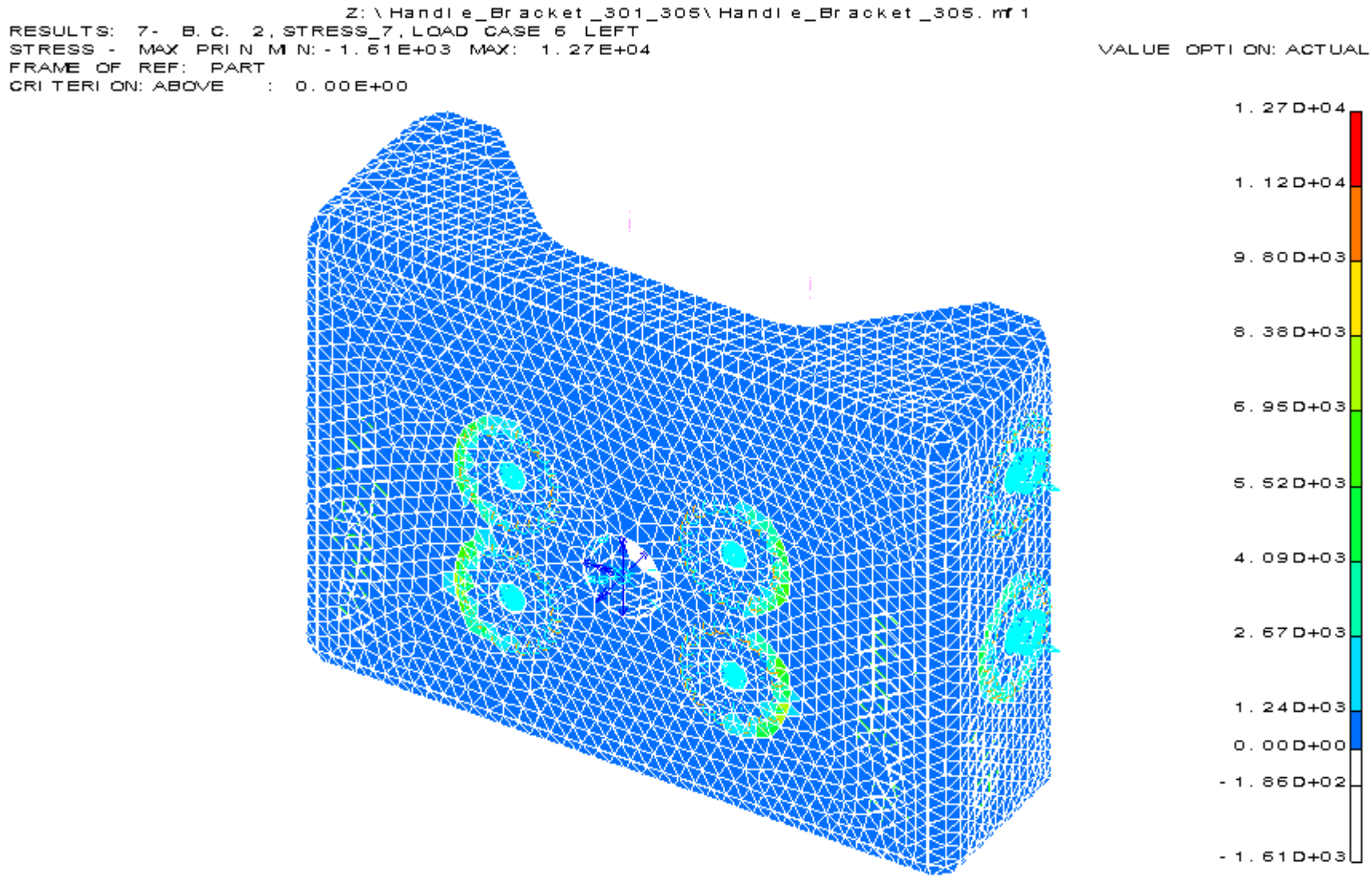

LOCATION OF HIGH STRESSES FOR LOAD CASE 6 LEFT

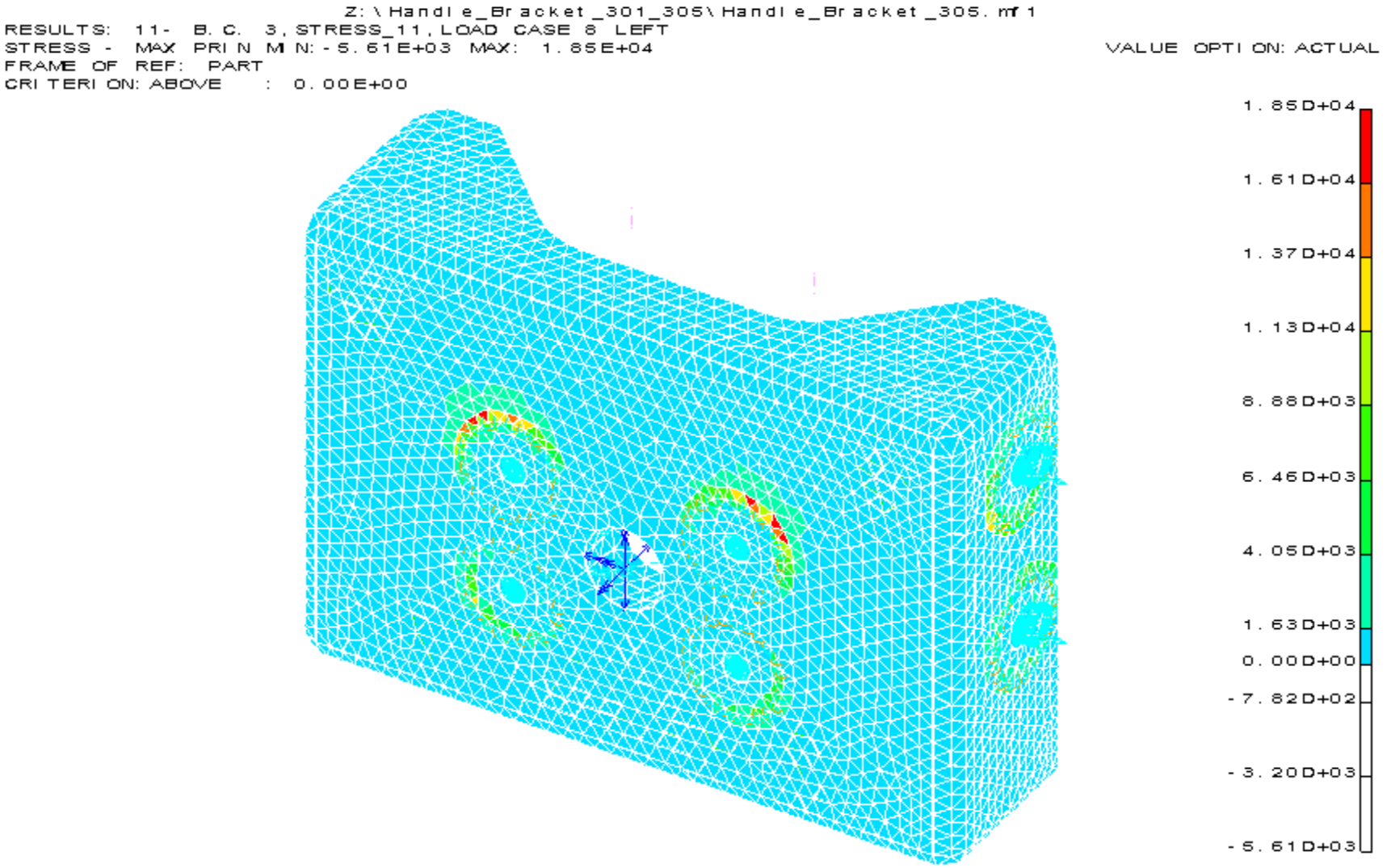

LOCATION OF HIGH STRESSES FOR LOAD CASE 8 LEFT

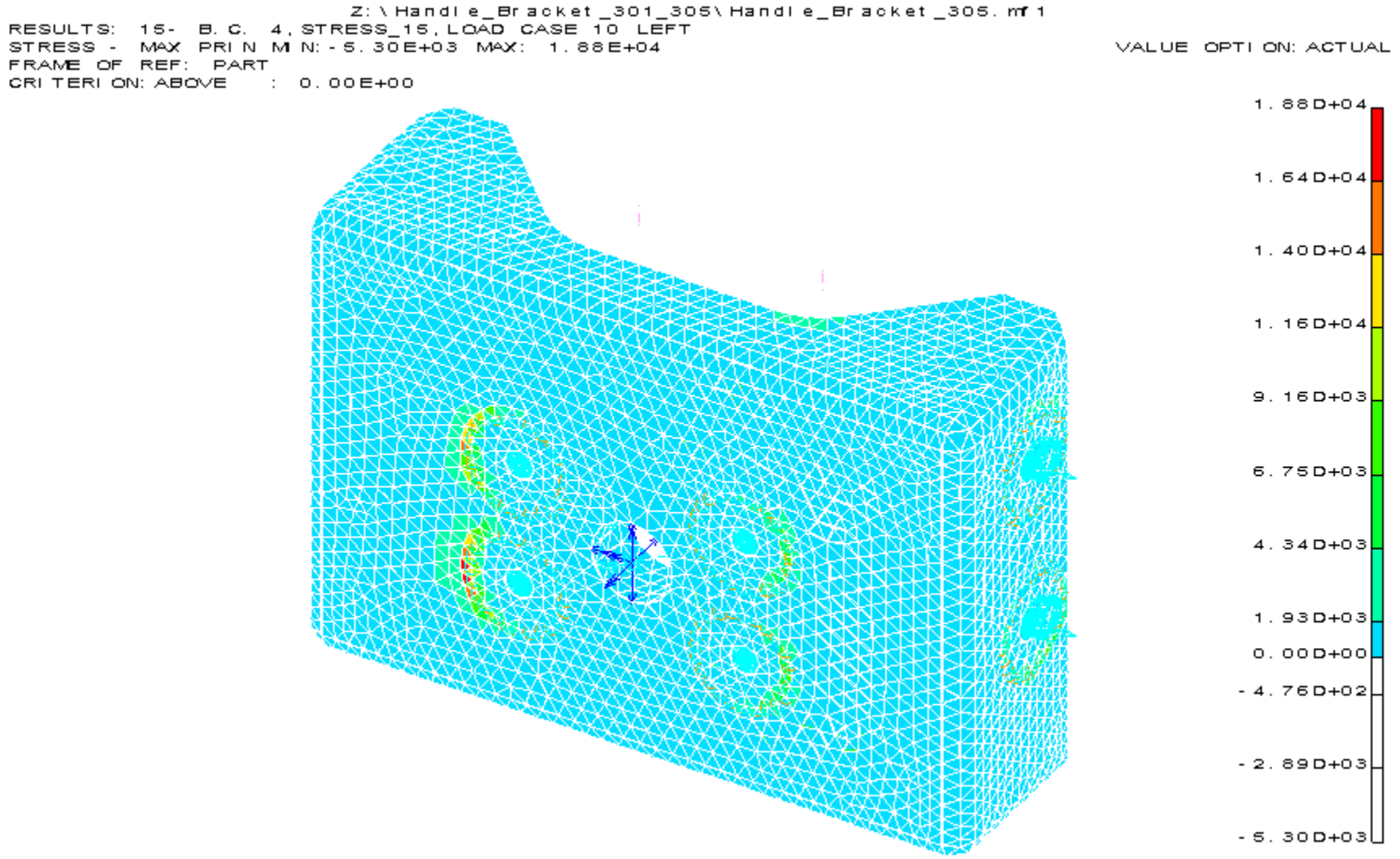

LOCATION OF HIGH STRESSES FOR LOAD CASE 10 LEFT

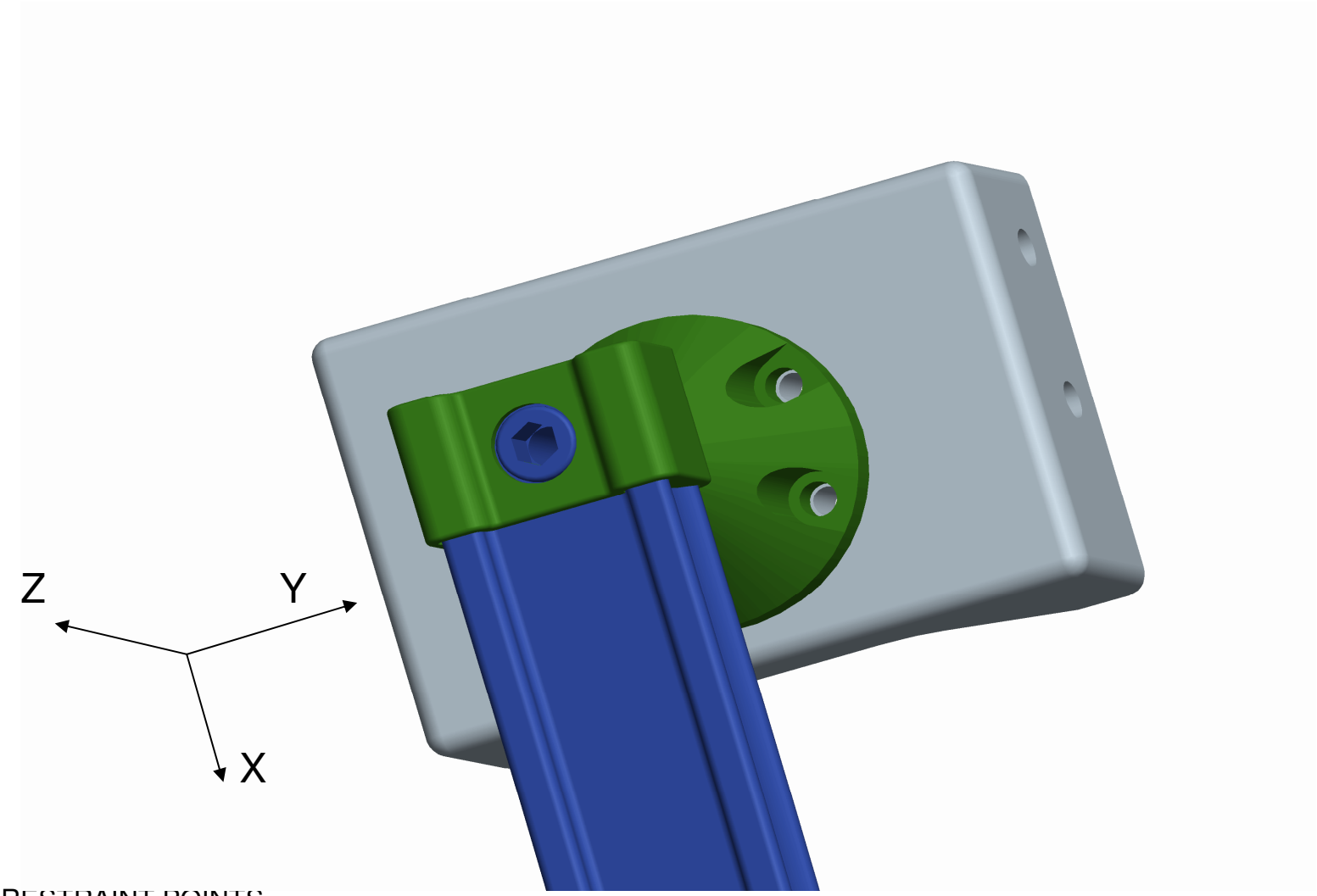

RESTRAINT POINTS

HANDLE BRACKET-305 AND RAIL POST ASSEMBLY

5.12.2 Handle Bracket Bolt Analysis

Margins of Safety

Table 5.12.2-1: Minimum Margins of Safety Summary for Handle Bracket Bolts

Part / Dwg Number	Part Name / Description	Material & Heat Treatment	Critical Load Condition	Failure Mode	Margin of Safety	Reference Page
NAS1954C6	Handle Bracket -303, Bottom Bolts	A-286	Load Case 1 Right End	Comb Shear Tension Bend Ultim	0.154	5.12.2-7
NAS1351N3-8	Handle Bracket -303, Top Bolts	A-286	Load Case 1 Right End	Total Tension Yield	0.033	5.12.2-17
NAS1954C4	Handle Bracket -305, Bottom Bolts	A-286	Load Case 8 Left End	Total Tension Yield	0.181	5.12.2-28
NAS1351N3-8	Handle Bracket -305, Top Bolts	A-286	Load Case 8 Left End	Total Tension Yield	0.038	5.12.2-38

Table 5.12.2-2: Minimum Fail-Safe Margins of Safety Summary for Handle Bracket Bolts

Part / Dwg Number	Part Name / Description	Material & Heat Treatment	Critical Load Condition	Failure Mode	Margin of Safety	Reference Page
NAS1954C6	Handle Bracket -303, Bottom Bolts	A-286	Load Case 1 Right End	Comb Shear Tension Bend Ultim	0.16	5.12.2-8
NAS1351N3-8	Handle Bracket -303, Top Bolts	A-286	Load Case 1 Right End	Joint Separation	0.243	5.12.2-23
NAS1954C4	Handle Bracket -305, Bottom Bolts	A-286	Load Case 8 Left End	Total Thread Shear Ultim	0.485	5.12.2-29
NAS1351N3-8	Handle Bracket -305, Top Bolts	A-286	Load Case 8 Left End	Comb Shear Tension Bend Ultim	0.351	5.12.2-44

This analysis covers the fasteners for the three Handle Bracket Assemblies used on USS-02 Assembly and presented in drawing SDG39135878. The three Handle Brackets Assemblies are: (1) Handle Bracket Assembly, part SDG39135878-303, (2) Handle Bracket Assembly, part SDG39135878-301/307 and (3) Handle Bracket Assembly, part SDG39135878-305.

Each Bracket Assembly has two sets of fasteners: (1) the bottom fasteners connecting the Bracket Assembly to the Lower / Upper USS-02 Assembly and (2) the top fasteners connecting the Rail Post to the Bracket Assembly.

Handle Bracket-303 Bottom Bolts Analysis

The Handle Bracket (drawing SDG39135878-303) is attached to the Bridge Beam Elbow (drawing SDG39135734) with 4 bolts, nuts and washers.

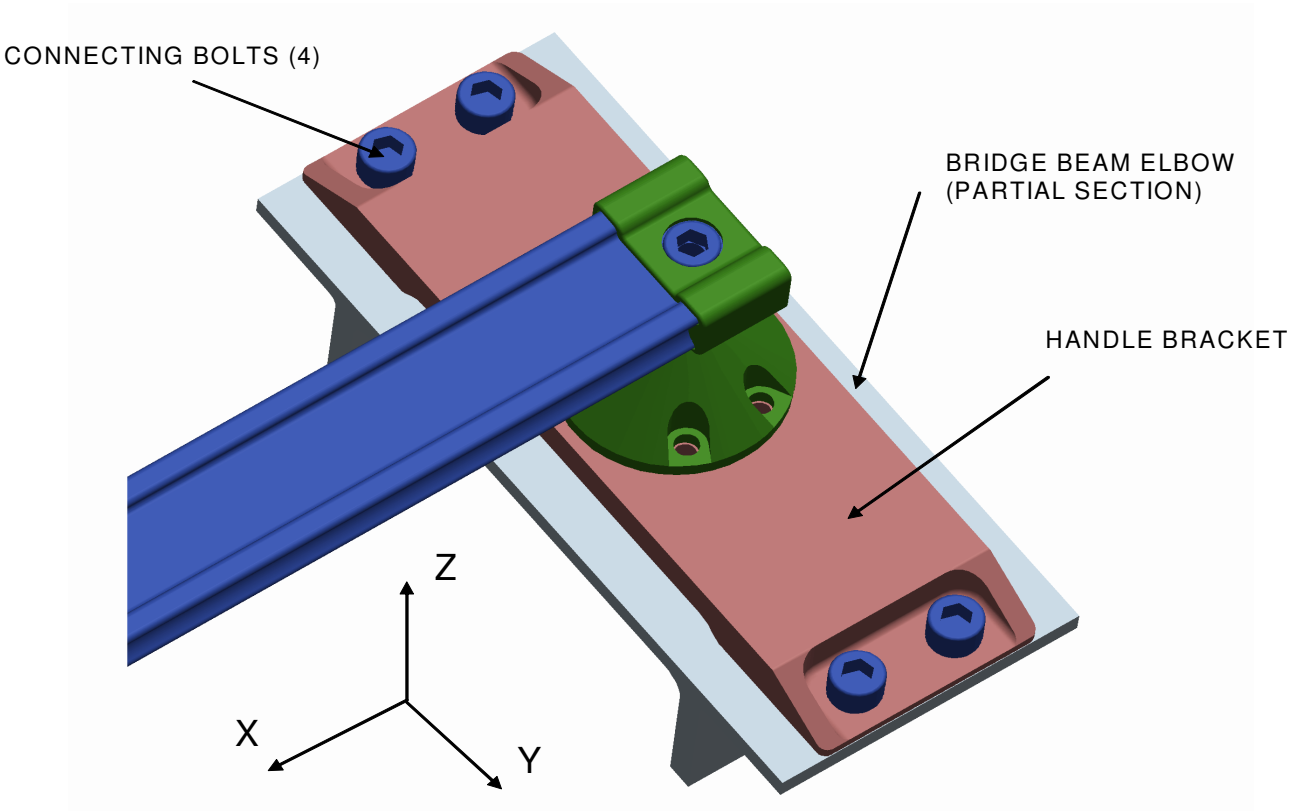

From Appendix A19, pages 10 and 11 find the bolt reactions for the four cases (use maximum absolute values) :

Note that the X and Y components are the shear loads in the X and Y directions and the Z component is the normal load.

$Vx_1 := 517.1 \cdot lbf$ $Vy_1 := 121.9 \cdot lbf$ $P_1 := 173.8 \cdot lbf$ Load Case 1 Left Rail End

$Vx_2 := 593.8 \cdot lbf$ $Vy_2 := 88.65 \cdot lbf$ $P_2 := 213.2 \cdot lbf$ Load Case 1 Right Rail End

$Vx_3 := 54.41 \cdot lbf$ $Vy_3 := 25.84 \cdot lbf$ $P_3 := 34.94 \cdot lbf$ Load Case 7 Left Rail End

$Vx_4 := 493.1 \cdot lbf$ $Vy_4 := 54.57 \cdot lbf$ $P_4 := 181.4 \cdot lbf$ Load Case 8 Left Rail End

$V_1 := \sqrt{(Vx_1)^2 + (Vy_1)^2}$ $V_2 := \sqrt{(Vx_2)^2 + (Vy_2)^2}$ $V_3 := \sqrt{(Vx_3)^2 + (Vy_3)^2}$ $V_4 := \sqrt{(Vx_4)^2 + (Vy_4)^2}$

$V_1 = 531.3 \cdot lbf$ $V_2 = 600.4 \cdot lbf$ $V_3 = 60.2 \cdot lbf$ $V_4 = 496.1 \cdot lbf$

Prepared By	Name	Date		File Name
	Paul Townson	06/08/07	Engineering and Science Contract Group	Bracket-303 Bottom Bolts.xmcd
Checked By	C. Bala		*Structural Analysis Section*	Drawing No. SDG39135878
Title	**AMS-02 HANDLE BRACKET BOLTS**			

CHECK

Bolt	**(NAS1954C6, 0.2500-28, 0.2481 Dia, 0.800 L, .425 Lt, CRES A286 180 KSI, Passivate)**
Bolt Head Washer	**(NAS1587-4C, .531 OD, .260 ID, .078 Thk, CRES 75 KSI, Passivate)**
Nut Washer	**(NAS1149E0463R, .500 OD, .265 ID, .063 Thk, CRES A286 160 KSI, Passivate)**
Nut	**(NAS1291C4M, CRES A286 125 KSI)**

Flange 1: Handle Bracket
Part number: Drawing SDG39135878-303
Material: 6061-T651

Flange 2: Bridge Beam Elbow
Part number: Drawing SDG39135734
Material: 7050-T7451

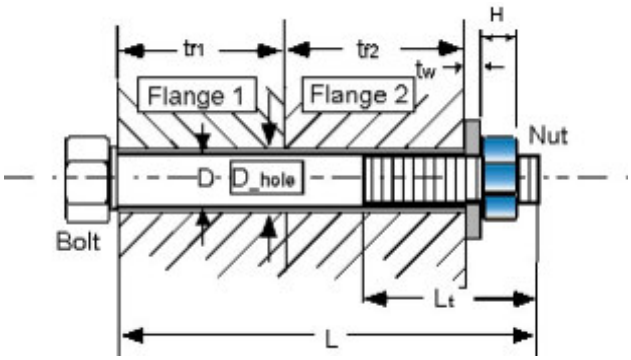

Use the bolt loads for Load Case 1 Right Rail End, since they are the highest loads.

Loads

Applied tensile load $P := P_2$

Applied shear load $V := V_2$

Applied bending moment $M := 0in \cdot lbf$

Factors of Safety

Ultimate $SFu := 2.0$ Yield $SFy := 1.25$

Joint Separation $SFsep := 1.2$ Fitting factor $FF := 1.15$

Temperature data

Assembly $Temp_initial := 70 \cdot deg$

Maximum $Temp_max := 139 \cdot deg$

Minimum $Temp_min := -47 \cdot deg$

Bolt and Nut Data

Nominal diameter of bolt $D := .25 \cdot in$

Number of threads/inch $Nt := 28 \cdot \frac{1}{in}$

Total length of bolt $L := 0.800 \cdot in$

Height of nut $H := 0.204 \cdot in$

Threaded length $Lt := 0.425 \cdot in$

(If bolt is fully threaded, input Lt = L)

This file uses the calculations shown in \\escfil02\2i11_mathcad\8307_bolts\thread_data.mcd

Tue Feb 15 10:54:02 AM 2005

Washer Data

Thickness of washers (2X) $tw := 0.141 \cdot in$

Outer Diameter of washer $Dw := 0.500 \cdot in$

Inner Diameter of washer $Dwi := 0.265 \cdot in$

Bolt head dia. across flats $dw := 0.430 \cdot in$ (used only if there is no washer)

Note: If there is no washer tw, Dw and Dwi should be zero

Flange data

Thickness of flange 1 $tf1 := 0.125 \cdot in$

Thickness of flange 2 $tf2 := 0.25 \cdot in$

Diameter of hole $D_hole := 0.288 \cdot in$

Material Property Data

Bolt

Temperature correction factor for bolt strength, ultimate and yield (Ref. MMPDS-01, fig.6.2.1.1.1) $TSu_bolt := 0.97$ $TSy_bolt := 0.97$

Bolt ultimate tensile allowable stress $Ftu_bolt := 180000 \cdot psi$ (Ref. NAS1954C6)

Bolt ultimate shear allowable stress $Fsu_bolt := 0.6 \cdot Ftu_bolt$

Bolt yield Tensile allowable stress $Fty_bolt := 132353 \cdot psi$ (Ref. Appendix C10)

Temperature correction factor for bolt modulus $TE_bolt := 0.98$ (Ref. MMPDS-01, fig. 6.2.1.1.4(a))

Modulus of elasticity of bolt $E_bolt := \left(29.1 \cdot 10^{6} \cdot psi\right)$ (Ref. MMPDS-01, table 6.2.1.0(b))

Thermal coefficient for bolt $\beta_bolt_hot := 9.1 \cdot 10^{-6} \cdot \frac{\frac{in}{in}}{deg}$ $\beta_bolt_cold := 8.7 \cdot 10^{-6} \cdot \frac{\frac{in}{in}}{deg}$

(Ref. MMPDS-01, fig. 6.2.1.0)

Nut

Temperature correction factor for nut strength $TS_nut := 0.97$

(Ref. MMPDS-01, fig. 6.2.1.1.1)

Ultimate tensile allowable stress $Ftu_nut := 125000 \cdot psi$

Ultimate Shear allowable stress $Fsu_nut := 0.6 \cdot Ftu_nut$

Ultimate axial strength of nut $Ptu_nut := 4580 \cdot lbf$ (Ref. NAS1291C4M page 2)

Washer

Temperature correction factor for washer modulus $TE_washer := 0.97$ (Ref MMPDS-01, fig. 6.2.1.1.4(a))

Modulus of elasticity of washer $E_washer := \left(29.1 \cdot 10^{6} \cdot psi\right)$ (Ref MMPDS-01, table. 6.2.1.0(b))

Flanges

Stiffness of the joint depends upon number of members in the grip of the fasteners, modulus of elasticity of these members, and diameters of the bolt and the washer.

Temperature correction factor for flange 1 (6061 Al Alloy) $Tf1E := 0.98$ (modulus) (Ref. MMPDS-01, fig. 3.6.2.2.4)

Temperature correction factor for flange 2 (7075 Al Alloy) $Tf2E := 0.98$ (modulus) (Ref. MMPDS-01, fig. 3.7.6.1.4)

(Aluminum 7050 and 7075 have similar material properties)

Modulus of elasticity for the parts in the joint $E_flange1 := \left(9.9 \cdot 10^{6} \cdot psi\right)$ $E_flange2 := \left(10.3 \cdot 10^{6} \cdot psi\right)$

(Ref. MMPDS-01, tables 3.6.2.0(b2) and 3.7.4.0(b1))

Coefficient of thermal expansion for flanges $\beta_flange1_hot := 12.8 \cdot 10^{-6} \cdot \frac{\frac{in}{in}}{deg}$ $\beta_flange2_hot := 12.3 \cdot 10^{-6} \cdot \frac{\frac{in}{in}}{deg}$

(Ref. MMPDS-01, fig. 3.6.2.0 and 3.7.6.0) $\beta_flange1_cold := 12.4 \cdot 10^{-6} \cdot \frac{\frac{in}{in}}{deg}$ $\beta_flange2_cold := 12.1 \cdot 10^{-6} \cdot \frac{\frac{in}{in}}{deg}$

Torque/Preload data

Maximum torque (65% of yield) $Tmax := 107 \cdot in \cdot lbf$ Loading plane factor $n := 0.5$

Minimum torque (95% of max. torque) $Tmin := 101 \cdot in \cdot lbf$ Preload Uncertainty $u := 0.25$

Torque coefficient (Lubricated) $k := 0.15$

This file uses the calculations shown in \\escfil02\2i11_mathcad\8307_bolts\bolt_stiffness_nut_RevC

Bolt Load data

Bolt/joint stiffness factor $= 0.343$ Preload due to temperature $Pthr_pos = 140.3 \cdot lbf$

Max. preload $PLDmax = 3707 \cdot lbf$ $Pthr_neg = -247.3 \cdot lbf$

Min. preload $PLDmin = 1594.4 \cdot lbf$ Uncertainty factor $u = 0.25$

Joint separation load $Psep = 255.84 \cdot lbf$ Torque coefficient $k = 0.15$

Max. load on the bolt(ultimate) $Pb = 3791 \cdot lbf$ Loading plane factor $n = 0.5$

Max. load on the bolt(yield) $Pby = 3759.5 \cdot lbf$ Thread pullout strength required to develop full strength of bolt $PAs = 7392.4 \cdot lbf$

Bolt ultimate tensile strength $PAt = 4442.6 \cdot lbf$ Nut ultimate tensile strength $Ptu_nut = 4442.6 \cdot lbf$

Length_check = "Bolt length is sufficient"

Summary of Margins for bolt:

Joint separation	$MS_1 = 5.54$	Direct Thread shear Ultimate	$MS_6 = 14.08$
Direct Tension Ultimate	$MS_2 = 8.06$	Total Thread shear Ultimate	$MS_7 = 0.95$
Direct Tension Yield	$MS_3 = 13.78$	Shear Ultimate	$MS_8 = 2.72$
Total Tension Ultimate	$MS_4 = 0.17$	Bending Ultimate	$MS_9 = 10$
Total Tension Yield	$MS_5 = 0.205$	Combined shear, tension and bending ultimate	$MS_{10} = 0.154$

Determination of the smallest margin of safety for the bolt, and the failure mode:

$MSbolt := \min(MS)$

$MSbolt = 0.154$ Failure_Mode = "Combined Shear Tension Bending Ultimate"

Bolt Fail-Safe Analysis

For bolt fail-safe analysis, the bolt with the highest load is removed and the FEM run with only three constraints.

From Appendix A19, pages 25, 26 and 27 find the bolt reactions for the four cases (use maximum absolute values) :

Note that the X and Y components are the shear loads in the X and Y directions and the Z component is the normal load.

$Vx_1 := 939.2 \cdot lbf$ $Vy_1 := 271.4 \cdot lbf$ $P_1 := 343.1 \cdot lbf$ Load Case 1 Left Rail End

$Vx_2 := 1055.0 \cdot lbf$ $Vy_2 := 269.3 \cdot lbf$ $P_2 := 390.9 \cdot lbf$ Load Case 1 Right Rail End

$Vx_3 := 163.1 \cdot lbf$ $Vy_3 := 33.3 \cdot lbf$ $P_3 := 64.97 \cdot lbf$ Load Case 7 Left Rail End

$Vx_4 := 942.4 \cdot lbf$ $Vy_4 := 249.2 \cdot lbf$ $P_4 := 359.2 \cdot lbf$ Load Case 8 Left Rail End

$V_1 := \sqrt{(Vx_1)^2 + (Vy_1)^2}$ $V_2 := \sqrt{(Vx_2)^2 + (Vy_2)^2}$ $V_3 := \sqrt{(Vx_3)^2 + (Vy_3)^2}$ $V_4 := \sqrt{(Vx_4)^2 + (Vy_4)^2}$

$V_1 = 977.6 \cdot lbf$ $V_2 = 1088.8 \cdot lbf$ $V_3 = 166.5 \cdot lbf$ $V_4 = 974.8 \cdot lbf$

Use the bolt loads for Load Case 1 Right Rail End, since they are the highest loads.

Fail-safe Loads

Applied tensile load $P_FS := 390.9 \cdot lbf$

Applied shear load $V_FS := 1088.8 \cdot lbf$

Applied bending moment $M_FS := 0 \cdot in \cdot lbf$

Fail-safe Factors of Safety

Ultimate $SFu_FS := 1.0$

Joint Separation $SFsep_FS := 1.0$

This file uses the calculations shown in \\escfil02\2i11_mathcad\8307_bolts\bolt_stiffness_nut_FS_RevC

Mon Feb 14 12:37:28 2005

Bolt Fail-safe Load data

Joint separation load $Psep_FS = 390.9 \cdot lbf$

Max. load on the bolt(ultimate) $Pb_FS = 3784 \cdot lbf$

Summary of fail-safe Margins for bolt:

Joint separation	$MS_FS_1 = 3.28$	Total Thread shear Ultimate	$MS_FS_5 = 0.95$
Direct Tension Ultimate	$MS_FS_2 = 8.88$	Shear Ultimate	$MS_FS_6 = 3.11$
Total Tension Ultimate	$MS_FS_3 = 0.17$	Bending Ultimate	$MS_FS_7 = 10$
Direct Thread shear Ultimate	$MS_FS_4 = 15.44$	Combined shear, tension and bending ultimate	$MS_FS_8 = 0.16$

Determination of the smallest fail-safe margin of safety for the bolt, and the failure mode:

$MSbolt_FS := \min(MS_FS)$

$MSbolt_FS = 0.16$ Failure_Mode_FS = "Combined Shear Tension Bending Ultimate"

Handle Bracket-303 Top Bolts Analysis

The Rail Post (Bracket, ISS Handrail Assembly), drawing SDG33106341, is attached to the Handle Bracket Assembly, drawing SDG39135878-303, with 4 bolts NAS 1351N3 (0.190-32UNJF-3A). The bolts are screwed into inserts MS51831CA-201L, which are part of the Handle Bracket Assembly. The analysis of the Handle Bracket Assembly is covered in Section 5.12.1.

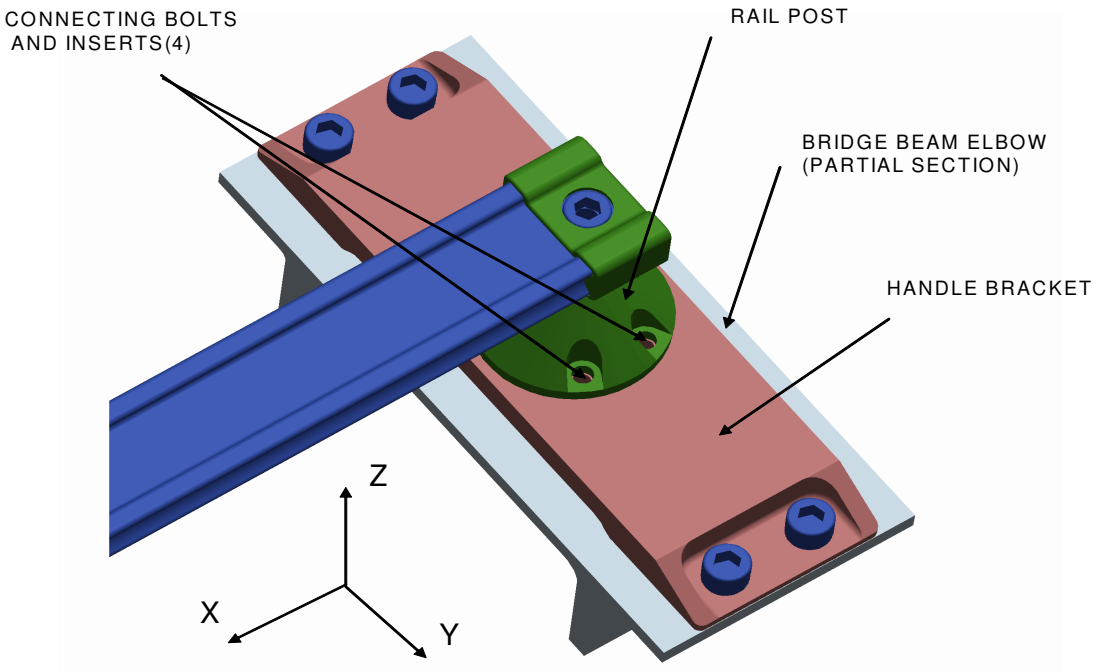

Bolt Geometry

size thread/in

$$bolt := \begin{pmatrix} 0.19 & 32 \\ 0.19 & 32 \\ 0.19 & 32 \\ 0.19 & 32 \end{pmatrix}$$

$i := 1 .. rows(bolt)$

$N_i := bolt_{i,2} \cdot \frac{1}{in}$ pitch of bolt

$D_i := bolt_{i,1} \cdot in$ bolt diameter

$i =$

1
2
3
4

$$At_i := \beta \cdot \left(\frac{D_i - 0.9743 \cdot \frac{1}{N_i}}{2} \right)^2$$ Tensile Area of bolt

$$As_i := \beta \cdot \left(\frac{D_i - 1.299038 \cdot \frac{1}{N_i}}{2} \right)^2$$ Shear Area of bolt

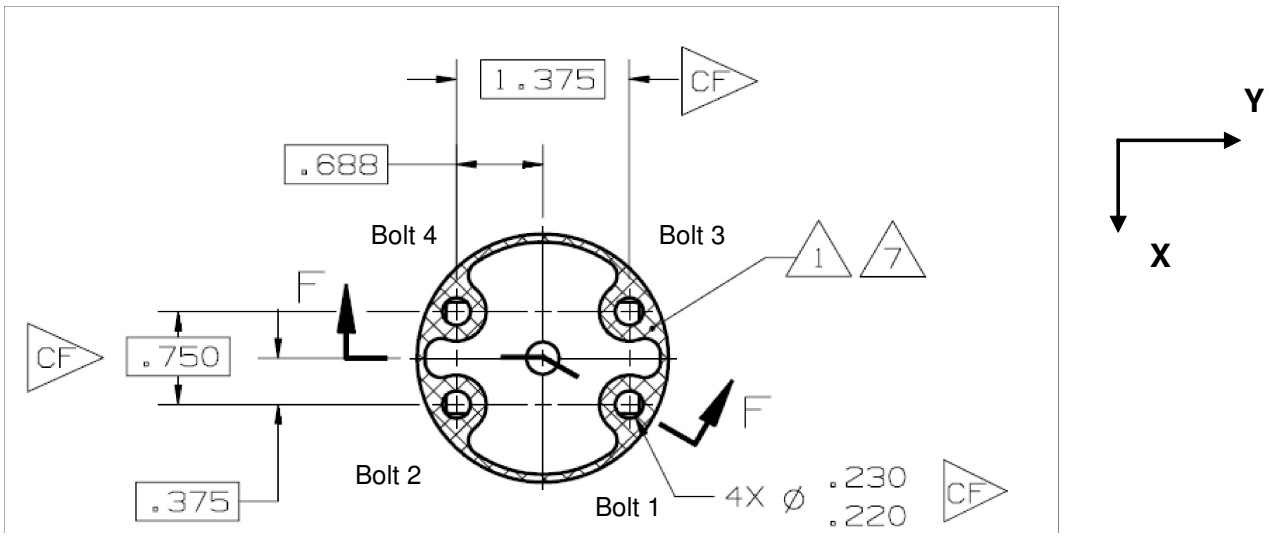

Handle Bracket Bolt Pattern

Bolt no.	x co-ord	y co-ord	z co-ord
$\begin{pmatrix} 1 \\ 2 \\ 3 \\ 4 \end{pmatrix}$	$x := \begin{pmatrix} 0.375 \\ 0.375 \\ -0.375 \\ -0.375 \end{pmatrix} \cdot in$	$y := \begin{pmatrix} 0.6875 \\ -0.6875 \\ 0.6875 \\ -0.6875 \end{pmatrix} \cdot in$	$z := \begin{pmatrix} 0 \\ 0 \\ 0 \\ 0 \end{pmatrix} \cdot in$

Location of Applied Forces and Moments

$xforce := 0.0in$ $\quad yforce := 0.0in$ $\quad zforce := 0.0in$

$$cgload := \begin{pmatrix} xforce \\ yforce \\ zforce \end{pmatrix} \qquad cgload = \begin{pmatrix} 0 \\ 0 \\ 0 \end{pmatrix} \cdot in$$

Center of Gravity of Bolt Group

$$xcg := \frac{\sum_i x_i}{rows(x)} \qquad xcg = 0\cdot in \qquad ycg := \frac{\sum_i y_i}{rows(y)} \qquad ycg = 0\cdot in \qquad zcg := \frac{\sum_i z_i}{rows(z)} \qquad zcg = 0\cdot in$$

$$cg_{bolt} := \begin{pmatrix} xcg \\ ycg \\ zcg \end{pmatrix} \qquad cg_{bolt} = \begin{pmatrix} 0 \\ 0 \\ 0 \end{pmatrix}\cdot in$$

Note: The bolt pattern is symmetric about all three axes.

Load Vector

$$r_{load} := cgload - cg_{bolt} \qquad r_{load} = \begin{pmatrix} 0 \\ 0 \\ 0 \end{pmatrix}\cdot in$$

Distance from CG of Bolts to Individual Bolts for shear calculations

$$r_i := \sqrt{\left(x_i - xcg\right)^2 + \left(y_i - ycg\right)^2} \qquad r = \begin{pmatrix} 0.783 \\ 0.783 \\ 0.783 \\ 0.783 \end{pmatrix}\cdot in$$

Bolt loads are retrieved from the FEM for the four worst cases (see Report 5.12.1, page 6). These loads are presented in the Table below.

Load Case	Rail End	Fx	Fy	Fz	Mx	My	Mz
1	Left	263	-2	150	10	416	29
1	Right	-257	-4	63	6	-536	-26
7	Left	2	-207	-1	542	-1	-29
8	Left	207	-2	-4	-1	476	-18

Database for Bolted Joint

$$data := \begin{pmatrix} 1 & 1 & 263 & -2 & 150 & 10 & 416 & 29 \\ 1 & 2 & -257 & -4 & 63 & 6 & -536 & -26 \\ 7 & 1 & 2 & -207 & -1 & 542 & -1 & -29 \\ 8 & 1 & 207 & -2 & -4 & -1 & 476 & -18 \end{pmatrix}$$

Note: In the second column of the data matrix, number 1 represents "Rail End Left" and number 2 represents "Rail End Right".

$num_bolts := rows(bolt)$ $\quad j := 1..rows(data)$

$num_bolts = 4$

Axial Load $\quad Fz_j := data_{j,5} \cdot lbf$ $\quad$ Torsion $\quad Mz_j := data_{j,8} \cdot in \cdot lbf$

Shear in Y axis $\quad Fy_j := data_{j,4} \cdot lbf$ $\quad$ Moment about Y axis $\quad My_j := data_{j,7} \cdot in \cdot lbf$

Shear in X axis $\quad Fx_j := data_{j,3} \cdot lbf$ $\quad$ Moment about X axis $\quad Mx_j := data_{j,6} \cdot in \cdot lbf$

Applied Bending Moment at Bolts $\quad M_j := 0 \cdot in \cdot lbf$

Moment Distribution

$$M_{tot}^{\langle j \rangle} := \begin{pmatrix} Mx_j \\ My_j \\ Mz_j \end{pmatrix} + r_{load} \times \begin{pmatrix} Fx_j \\ Fy_j \\ Fz_j \end{pmatrix}$$

Use the cross-product to determine the additional moments acting on the fasteners.

$Mx_boltcg_j := M_{tot_{1,j}}$ $\quad My_boltcg_j := M_{tot_{2,j}}$ $\quad Mz_boltcg_j := M_{tot_{3,j}}$

Tension on Bolts

$$Ftdirect_{i,j} := \begin{cases} 0 \cdot lbf & \text{if } Fz_j \le 0lbf \\ \dfrac{Fz_j}{num_bolts} & \text{otherwise} \end{cases}$$

Direct tensile load calculation - (The "if" statement checks for compression)

$$Fmx_{i,j} := \begin{cases} 0 \cdot lbf & \text{if } (y_i - ycg) = 0 \cdot in \\ \dfrac{\left[Mx_boltcg_j \cdot (y_i - ycg)\right] At_i}{\sum_i \left[(y_i - ycg)^2 \cdot At_i\right]} & \end{cases}$$

$$Fmy_{i,j} := \begin{cases} 0 \cdot lbf & \text{if } (x_i - xcg) = 0 \cdot in \\ \dfrac{My_boltcg_j \cdot (x_i - xcg) \cdot At_i}{\sum_i \left[(x_i - xcg)^2 \cdot At_i\right]} & \end{cases}$$

$Ft_{i,j} := Ftdirect_{i,j} + Fmx_{i,j} + Fmy_{i,j}$ $\quad$ Total Tensile load

Shear on Bolts

Secondary shear on bolts $\quad Fs_{i,j} := \dfrac{Mz_boltcg_j \cdot r_i \cdot As_i}{\sum_i \left[(r_i)^2 \cdot (As_i)\right]}$

Direct shear loads $$Fsd_{i,j} := \frac{\sqrt{\left(Fy_j\right)^2 + \left(Fx_j\right)^2}}{num_bolts}$$

Total shear load $$Fstot_{i,j} := Fs_{i,j} + Fsd_{i,j}$$

The stack commands below are used to stack the Load Case (LC) and Rail End identification (ID) in ascending order per bolt. The Load Case (LC) number is located in the first column and the Rail End (ID) numbers in the second column. For each Load Case, the bolt number within the bolt pattern is added to the end of each LC number. For example, the Load Case identification number 1 will have bolt numbers 1 thru 4 attached to the end for all 4 load cases. This brings the total number of load cases to 16 (4 bolts x 4 load cases).

Load Case $LC_j := data_{j,1}$ $LC_j := LC_j \cdot 10 + 1$ Counter for number of bolts in pattern

Rail End ID $ID_j := data_{j,2}$

$$LC := stack(LC, LC + 1, LC + 2, LC + 3)$$

$$ID := stack(ID, ID, ID, ID)$$

The stack commands below are used to stack applied axial load (P), applied shear load (V), and applied moment (M) in asending order per bolt. These loads are put into an array with the Load Case (LC) number and Rail End (ID) number from above. See the "Output" file below.

$$P := stack\left[\left(Ft^T\right)^{\langle 1\rangle}, \left(Ft^T\right)^{\langle 2\rangle}, \left(Ft^T\right)^{\langle 3\rangle}, \left(Ft^T\right)^{\langle 4\rangle}\right]$$

$$V := stack\left[\left(Fstot^T\right)^{\langle 1\rangle}, \left(Fstot^T\right)^{\langle 2\rangle}, \left(Fstot^T\right)^{\langle 3\rangle}, \left(Fstot^T\right)^{\langle 4\rangle}\right]$$

$$M := stack(M, M, M, M)$$

The "Output" file below outputs an array from left to right starting with the Load Case (LC), Rail End Identification (ID), applied load on the bolt (P), applied shear on the bolt (V), and applied moment on the bolt (M).

$$Output := augment\left(LC, ID, \frac{P}{lbf}, \frac{V}{lbf}, \frac{M}{in \cdot lbf}\right)$$

(Note: Since the LC and ID numbers are dimensionless, the P, V, and M values are divided by their units in order to make the array dimensionless.)

Output =

	LC	ID	P	V	M
	1	2	3	4	5
1	11	1	318.47	75.01	0
2	11	2	-339.402	55.958	0
3	71	1	196.424	42.495	0
4	81	1	316.97	46.006	0
5	12	1	311.197	75.01	0
6	12	2	-343.765	55.958	0
7	72	1	-197.758	42.495	0
8	82	1	317.697	46.006	0
9	13	1	-236.197	75.01	0
10	13	2	375.265	55.958	0
11	73	1	197.758	42.495	0
12	83	1	-317.697	46.006	0
13	14	1	-243.47	75.01	0
14	14	2	370.902	55.958	0
15	74	1	-196.424	42.495	0
16	84	1	-316.97	46.006	0

$\text{rows}(\text{Output}) = 16$

Size of the "Output" Array:

(4 bolts x 4 load cases) = 16 Load Cases

CHECK
Bolt (NAS1351N3-8, 0.1900-32, 0.50 L, HRES A286, 160 KSI, Passivate)
No Washer
Insert (MS51831CA-201L, .1900-32, .312 L, .312 W, CRES A286 140 KSI, Passivate)

The array from the Output above is read.

$\text{data} := \text{Output}$

$s := 1 .. \text{rows}(\text{data})$

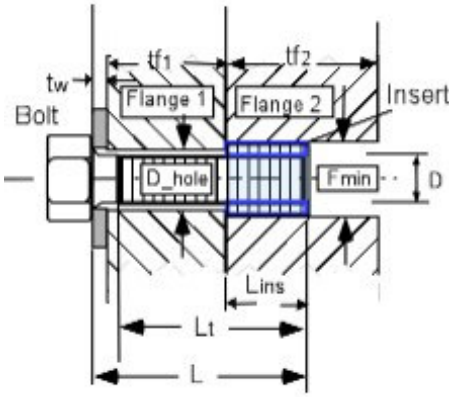

Flange 1: Bracket, ISS Handrail Assembly
Part number: SDG33106341
Material: 7075-T7351

Flange 2: Handle Bracket Assembly
Part number: SDG39135878
Material: 6061-T651

Applied tensile load $P_s := \text{data}_{s,3} \cdot \text{lbf}$

Applied shear load $V_s := \text{data}_{s,4} \cdot \text{lbf}$

Applied bending moment $M_s := \text{data}_{s,5} \cdot \text{in} \cdot \text{lbf}$

Load Case LC $LC_s := \text{data}_{s,1}$

Rail End ID $ID_s := \text{data}_{s,2}$

Prepared By	Name	Date		File Name
	Paul Townson	06/08/07	Engineering and Science Contract Group	Bracket-303 Top Bolts.mcd
Checked By	C. Bala		*Structural Analysis Section*	Drawing No. SDG39135878
Title	**AMS-02 HANDLE BRACKET BOLTS**			

Factors of Safety

Ultimate $SFu := 2.0$ Yield $SFy := 1.25$

Joint Separation $SFsep := 1.2$ Fitting factor $FF := 1.15$

Temperature Data (Ref Appendix C2), On-Orbit Case

Assembly $Temp_initial := 70 \cdot deg$

Maximum $Temp_max := 139 \cdot deg$

Minimum $Temp_min := -47 \cdot deg$

Bolt and Insert Data

Nominal diameter of bolt $D := 0.190 \cdot in$

Number of threads/inch $Nt := 32 \cdot \frac{1}{in}$

Total length of bolt $L := 0.500 \cdot in$

Length of insert $Lins := 0.312 \cdot in$

Threaded length $Lt := L$

Min. external diameter of insert $Fmin := 0.312 \cdot in$

(If bolt is fully threaded, input Lt = L)

Depth of recess for insert $lr := 0.02 \cdot in$

This file uses the calculations shown in \\escfil02\2i11_mathcad\8307_bolts\thread_data.mcd

Thread Data File

Washer Data

Thickness of washer $tw := 0.0 \cdot in$

Outer Diameter of washer $Dw := 0.0in$

Inner Diameter of washer $Dwi := 0.0 \cdot in$

Bolt head dia. across flats (used only if there is no washer) $dw := 0.303 \cdot in$

Flange data

Thickness of flange 1 (Ref. SDG33106341) $tf1 := .188 \cdot in$

Thickness of flange 2 $tf2 := .312in$ (insert length)

Diameter of hole (Ref. SDG33106341) $D_hole := 0.23 \cdot in$

Material Property Data

Bolt

Temperature correction factor for bolt strength ultimate (Ref. MMPDS-01, fig. 6.2.1.1.1) $TSu_bolt := 0.97$ yield $TSy_bolt := 0.97$

Bolt ultimate tensile allowable stress $Ftu_bolt := 160000 \cdot psi$ (Ref. NAS1351N3)

Bolt ultimate shear allowable stress $Fsu_bolt := 0.6 \cdot Ftu_bolt$

Bolt yield tensile allowable $Fty_bolt := 120000 \cdot psi$

Temperature correction factor for bolt modulus $TE_bolt := .98$ (Ref. MMPDS-01, fig. 6.2.1.1.4(a))

Modulus of elasticity of bolt $E_bolt := \left(29.1 \cdot 10^{6} \cdot psi\right)$ (Ref. MMPDS-01, table 6.2.1.0(b))

Thermal coeffecient for bolt: $u_bolt_hot := 9.1 \cdot 10^{-6} \cdot \frac{\frac{in}{in}}{deg}$ $u_bolt_cold := 8.7 \cdot 10^{-6} \cdot \frac{\frac{in}{in}}{deg}$

(Ref. MMPDS-01, fig. 6.2.1.0)

Insert

Temperature correction factor for insert strength $TS_ins := .97$ (Ref. MMPDS-01, fig. 6.2.1.1.1)

Ultimate tensile allowable stress $Ftu_ins := 140000 \cdot psi$ (Ref. MS51831)

Ultimate shear allowable stress $Fsu_ins := 0.6 \cdot Ftu_ins$

Washer

Temperature correction factor for washer modulus $TE_washer := .97$ (Ref. MMPDS-01, fig. 6.2.1.1.4(a))

Modulus of elasticity of washer $E_washer := \left(29.1 \cdot 10^{6} \cdot psi\right)$ (Ref. MMPDS-01, table 6.2.1.0(b))

Flanges

Stiffness of the joint depends upon number of members in the grip of the fasteners,
Modulus of elasticity of these members, and diameters of the bolt and the washer.

Temperature correction factor for flange 1 $Tf1E := .98$ (modulus) (Ref. MMPDS-01, fig. 3.7.6.1.4)

Temperature correction factor for flange 2 $Tf2E := .98$ (modulus) (Ref. MMPDS-01, fig. 3.6.2.2.4)

$Tf2s := .96$ (strength) (Ref. MMPDS-01, fig. 3.6.2.2.1(a) and (b))

Shear Strength Allowable for flanges $Fsu_f2 := 27000 \cdot psi$ (Ref. MMPDS-01, table 3.6.2.0(b2))

Modulus of elasticity for the parts in the joint $E_flange1 := \left(10.3 \cdot 10^{6} \cdot psi\right)$ $E_flange2 := \left(9.9 \cdot 10^{6} \cdot psi\right)$

(Ref. MMPDS-01, table 3.7.6.0(b1) and 3.6.2.0(b2))

Coefficient of thermal expansion for flanges $u_flange1_hot := 12.3 \cdot 10^{-6} \cdot \frac{\frac{in}{in}}{deg}$ $u_flange2_hot := 12.8 \cdot 10^{-6} \cdot \frac{\frac{in}{in}}{deg}$

(Ref. MMPDS-01, fig. 3.7.6.0 and 3.6.2.0)

$u_flange1_cold := 12.1 \cdot 10^{-6} \cdot \frac{\frac{in}{in}}{deg}$ $u_flange2_cold := 12.4 \cdot 10^{-6} \cdot \frac{\frac{in}{in}}{deg}$

Torque/Preload Data

Maximum torque (65% of yield) $Tmax := 44.4 \cdot in \cdot lbf$ Loading plane factor: $n := .5$

Minimum torque (95% of max. torque) $Tmin := 42.2 \cdot in \cdot lbf$ Preload Uncertainty: $:= 0.25$

Torque coefficient (Lubricated): $k := 0.15$

This file uses the calculations shown in \\escfil02\2i11_mathcad\8307_bolts\multi_bolt_stiffness_insert_RevC

Insert Stiffness File

Bolt Load data

Bolt/joint stiffness factor	$= = 0.424$	Preload due to temperature	$Pthr_pos = 108.1 \cdot lbf$
Max. preload	$PLDmax = 2055.5 \cdot lbf$		$Pthr_neg = -187.3 \cdot lbf$
Min. preload	$PLDmin = 825.9 \cdot lbf$	Uncertainty factor	$= 0.25$
Joint separation load	$max(Psep) = 450.318 \cdot lbf$	Torque coefficient	$k = 0.15$
Max. load on the bolt(ultimate)	$max(Pb) = 2238.7 \cdot lbf$	Loading plane factor	$n = 0.5$
Max. load on the bolt(yield)	$max(Pby) = 2170 \cdot lbf$	Thread shear pullout load of bolt or insert	$Pths = 6342.1 \cdot lbf$
Bolt ultimate tensile strength	$PAt = 2987.4 \cdot lbf$	Thread shear pullout load in parent metal	$Ppths = 3963.4 \cdot lbf$

Length_check = "Bolt length is sufficient"

Summary of Margins for bolt:

Joint separation	$MS_min_{1,1} = 1.024$	Direct Thread shear Ultimate	$MS_min_{6,1} = 3.592$
Direct Tension Ultimate	$MS_min_{2,1} = 2.461$	Total Thread shear Ultimate	$MS_min_{7,1} = 0.770$
Direct Tension Yield	$MS_min_{3,1} = 3.153$	Shear Ultimate	$MS_min_{8,1} = 8.46$
Total Tension Ultimate	$MS_min_{4,1} = 0.334$	Bending Ultimate	$MS_min_{9,1} = 10$
Total Tension Yield	$MS_min_{5,1} = 0.033$	Combined shear, tension and bending ultimate	$MS_min_{10,1} = 0.334$

Determination of the smallest margin of safety for the bolt, and the failure mode:

$MSbolt := min(MS)$

$MSbolt = 0.033$ Failure_Mode = "Total Tension Yield"

$MS_min_LC = 13$	Load Case ID (1) and Bolt Number (3) for Minimum Margin
$MS_min_ID = 2$	Rail End ID for Minimum Margin
$MS_min_P = 375.3$	Applied Tensile Load for Minimum Margin
$MS_min_V = 56$	Applied Shear Load for Minimum Margin
$MS_min_M = 0$	Applied Bending Moment for Minimum Margin

Bolt Fail-Safe Analysis

Since bolt number 3 has the lowest margin of safety it is assumed that this bolt will be the first bolt to fail. There are now 3, NAS 1351N3 0.19-32 fasteners, holding the Post to the Bracket.

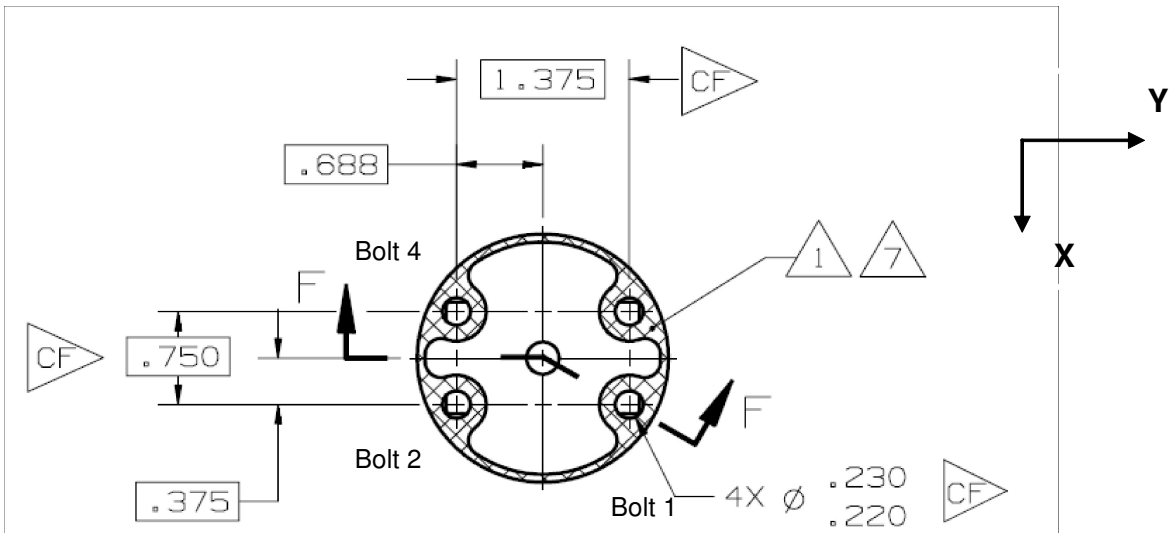

size thread/in

$$bolt2 := \begin{pmatrix} 0.19 & 32 \\ 0.19 & 32 \\ 0.19 & 32 \end{pmatrix}$$

$$s := 1 .. rows(bolt2)$$

$N2_s := bolt2_{s,2} \cdot \frac{1}{in}$ pitch of bolt $\quad D2_s := bolt2_{s,1} \cdot in$ bolt diameter

$At2_s := \beta \cdot \left(\frac{D2_s - 0.9743 \cdot \frac{1}{N2_s}}{2} \right)^2$ Tensile Area of bolt $\quad As2_s := \beta \cdot \left(\frac{D2_s - 1.299038 \cdot \frac{1}{N2_s}}{2} \right)^2$ Shear Area of bolt

Bolt no. x co-ord y co-ord z co-ord

$$\begin{pmatrix} 1 \\ 2 \\ 4 \end{pmatrix} \quad x2 := \begin{pmatrix} 0.375 \\ 0.375 \\ -0.375 \end{pmatrix} \cdot in \quad y2 := \begin{pmatrix} 0.6875 \\ -0.6875 \\ -0.6875 \end{pmatrix} \cdot in \quad z2 := \begin{pmatrix} 0 \\ 0 \\ 0 \end{pmatrix} \cdot in$$

Location of applied forces and moments

$xforce2 := 0.0in \quad yforce2 := 0.0in \quad zforce2 := 0.0in$

$$cgload2 := \begin{pmatrix} xforce2 \\ yforce2 \\ zforce2 \end{pmatrix} \qquad cgload2 = \begin{pmatrix} 0 \\ 0 \\ 0 \end{pmatrix} \cdot in$$

Center of gravity of bolt group

$$xcg2 := \frac{\sum_s x2_s}{rows(x2)} \qquad xcg2 = 0.125 \cdot in \qquad ycg2 := \frac{\sum_s y2_s}{rows(y2)} \qquad ycg2 = -0.229 \cdot in \qquad zcg2 := \frac{\sum_s z2_s}{rows(z2)} \qquad zcg2 = 0 \cdot in$$

$$cg_{bolt2} := \begin{pmatrix} xcg2 \\ ycg2 \\ zcg2 \end{pmatrix} \qquad cg_{bolt2} = \begin{pmatrix} 0.125 \\ -0.229 \\ 0 \end{pmatrix} \cdot in$$

Note: Since the z direction is into the plate the loads are shared equally between the bolts. However, due to a failure in bolt 3, the x and y directions in the bolt pattern are unsymmetric and have offsets from the center of gravity.

Load Vector

$$r_{load2} := cgload2 - cg_{bolt2} \qquad r_{load2} = \begin{pmatrix} -0.125 \\ 0.229 \\ 0 \end{pmatrix} \cdot in$$

Distance from CG of Bolts to Individual Bolts for shear calculations

$$r2_s := \sqrt{\left(x2_s - xcg2\right)^2 + \left(y2_s - ycg2\right)^2} \qquad r2 = \begin{pmatrix} 0.950 \\ 0.522 \\ 0.678 \end{pmatrix} \cdot in$$

Reading database file for bolted joint

$$data := \begin{pmatrix} 1 & 1 & 263 & -2 & 150 & 10 & 416 & 29 \\ 1 & 2 & -257 & -4 & 63 & 6 & -536 & -26 \\ 7 & 1 & 2 & -207 & -1 & 542 & -1 & -29 \\ 8 & 1 & 207 & -2 & -4 & -1 & 476 & -18 \end{pmatrix}$$

Note: The second column of the data matrix, number 1 represents "Left" and number 2 represents "Right".

$q := 1 .. rows(data) \qquad num_bolts2 := rows(bolt2)$

Axial Load $Fz2_q := data_{q,5} \cdot lbf$

Torsion $Mz2_q := data_{q,8} \cdot in \cdot lbf$

Shear in Y axis $Fy2_q := data_{q,4} \cdot lbf$

Moment about Y axis $My2_q := data_{q,7} \cdot in \cdot lbf$

Shear in Z axis $Fx2_q := data_{q,3} \cdot lbf$

Moment about Z axis $Mx2_q := data_{q,6} \cdot in \cdot lbf$

Applied Bending Moment at Bolts $M2_q := 0 \cdot in \cdot lbf$

Moment Distribution

$$M_{tot2}^{\langle q \rangle} := \begin{pmatrix} Mx2_q \\ My2_q \\ Mz2_q \end{pmatrix} + r_{load} \times \begin{pmatrix} Fx2_q \\ Fy2_q \\ Fz2_q \end{pmatrix}$$

Use the cross-product to determine the additional moments acting on the fasteners.

$Mx_boltcg2_q := M_{tot2_{1,q}}$ $\quad My_boltcg2_q := M_{tot2_{2,q}}$ $\quad Mz_boltcg2_q := M_{tot2_{3,q}}$

Tension on bolts

$$Ftdirect2_{s,q} := \begin{cases} 0 \cdot lbf & \text{if } Fz2_q \le 0lbf \\ \dfrac{Fz2_q}{num_bolts2} & \text{otherwise} \end{cases}$$

Direct tensile load calculation

$$Fmx2_{s,q} := \begin{cases} 0 \cdot lbf & \text{if } \left(y2_s - ycg2\right) = 0 \cdot in \\ \dfrac{\left[Mx_boltcg2_q \cdot \left(y2_s - ycg2\right)\right] At2_s}{\sum_s \left[\left(y2_s - ycg2\right)^2 \cdot At2_s\right]} & \end{cases}$$

$$Fmy2_{s,q} := \begin{cases} 0 \cdot lbf & \text{if } \left(x2_s - xcg2\right) = 0 \cdot in \\ \dfrac{My_boltcg2_q \cdot \left(x2_s - xcg2\right) \cdot At2_s}{\sum_s \left[\left(x2_s - xcg2\right)^2 \cdot At2_s\right]} & \end{cases}$$

$$Ft2_{s,q} := Ftdirect2_{s,q} + Fmx2_{s,q} + Fmy2_{s,q}$$

Total Tensile load

Shear on bolts

Secondary shear on bolts

$$Fs2_{s,q} := \frac{Mz_boltcg2_q \cdot r2_s \cdot As2_s}{\sum_s \left[\left(r2_s\right)^2 \cdot \left(As2_s\right)\right]}$$

Direct shear Loads $Fs2d_{s,q} := \dfrac{\sqrt{\left(Fy2_q\right)^2 + \left(Fx2_q\right)^2}}{num_bolts}$

Total shear load $Fstot2_{s,q} := Fs2_{s,q} + Fs2d_{s,q}$ (Note: The Fs variable is the secondary shear and calculated above.)

Load Case $LC2_q := data_{q,1}$ $LC2_q := LC2_q \cdot 10 + 1$ Counter for number of bolts in pattern

Rail End ID $ID2_q := data_{q,2}$

The stack command below is used to stack the Load Case Number (LC2) and Rail End (ID2) in asending order per bolt. Note: bolt number 3 is not included.

$LC2 := stack(LC2, LC2 + 1, LC2 + 3)$

$ID2 := stack(ID2, ID2, ID2)$

The stack commands below are used to stack apllied axial load (P2), applied shear load (V2), and applied moment (M2) in ascending order per bolt. These loads are put into an array with the Load Case (LC2) and Rail End (ID2) from above. See the "Output" file below. Notice that there are only 3 bolts, since bolt number 3 is not included.

$P2 := stack\left[\left(Ft2^T\right)^{\langle 1\rangle}, \left(Ft2^T\right)^{\langle 2\rangle}, \left(Ft2^T\right)^{\langle 3\rangle}\right]$

$V2 := stack\left[\left(Fstot2^T\right)^{\langle 1\rangle}, \left(Fstot2^T\right)^{\langle 2\rangle}, \left(Fstot2^T\right)^{\langle 3\rangle}\right]$

$M2 := stack(M2, M2, M2)$

The "Output2" file below outputs an array from left to right starting with the Load Case number (LC2), Rail End Identification (ID2), applied load on the bolt (P2), applied shear on the bolt (V2), and applied moment on the bolt (M2).

$Output2 := augment\left(LC2, ID2, \dfrac{P2}{lbf}, \dfrac{V2}{lbf}, \dfrac{M2}{in \cdot lbf}\right)$ (Note: Since the LC2 and ID2 numbers are dimensionless, the P2, V2, and M2 values are divided by their units in order to make the array dimensionless.)

Output2 =

	LC2	ID2	P2	V2	M2
	1	2	3	4	5
1	11	1	334.606	82.6	0
2	11	2	-331.97	49.152	0
3	71	1	393.515	34.904	0
4	81	1	316.606	41.295	0
5	12	1	323.697	75.01	0
6	12	2	-338.515	55.958	0
7	72	1	-197.758	42.495	0
8	82	1	317.697	46.006	0
9	14	1	-508.303	77.78	0
10	14	2	733.485	53.474	0
11	74	1	-195.758	39.725	0
12	84	1	-634.303	44.287	0

$rows(Output2) = 12$

Size of the "Output" Array:

(3 bolts x 4 load cases) = 12 load cases

Bolt Fail-safe Results

The array from the Output2 is read:

$data_fs := Output2$

$s := 1 .. rows(data_fs)$

Fail-safe Loads

Applied tensile load $P_FS_s := data_fs_{s,3} \cdot lbf$ $ID_FS_s := data_fs_{s,1}$

Applied shear load $V_FS_s := data_fs_{s,4} \cdot lbf$ $LC_FS_s := data_fs_{s,2}$

Applied bending moment $M_FS_s := data_fs_{s,5} \cdot in \cdot lbf$

Fail-safe Factors of Safety

Ultimate $SFu_FS := 1.0$

Joint Separation $SFsep_FS := 1.0$

This file uses the calculations shown in \\escfil02\2i11_mathcad\8307_bolts\ multi_bolt_stiffness_insert_FS_RevC

Fail-Safe Stiffness File

Bolt Fail-safe Load data

Joint separation load $max(Psep_FS) = 733.485 \cdot lbf$ $max(P_FS) = 733.485\ lbf$

Max. load on the bolt(ultimate) $max(Pb_FS) = 2234.5 \cdot lbf$ $max(V_FS) = 82.6\ lbf$

Summary of fail-safe Margins for bolt:

Joint separation	$MS_minFS_{1,1} = 0.243$	Total Thread shear Ultimate	$MS_minFS_{5,1} = 0.774$
Direct Tension Ultimate	$MS_minFS_{2,1} = 2.542$	Shear Ultimate	$MS_minFS_{6,1} = 16.19$
Total Tension Ultimate	$MS_minFS_{3,1} = 0.337$	Bending Ultimate	$MS_minFS_{7,1} = 10$
Direct Thread shear Ultimate	$MS_minFS_{4,1} = 3.7$	Combined shear, tension and bending ultimate	$MS_minFS_{8,1} = 0.3368$

Determination of the smallest fail-safe margin of safety for the bolt, and the failure mode:

$MSbolt_FS := \min(MS_FS)$

$MSbolt_FS = 0.243$ $\quad$ $Failure_Mode_FS = \text{"Joint Separation"}$

$MS_min_IDFS = 14$ Load Case ID (1) and Bolt Number (4) for Minimum Margin

$MS_min_LCFS = 2$ Rail End ID for Minimum Margin

$MS_min_PFS = 733.5$ Applied Tensile Load for Minimum Margin

$MS_min_VFS = 53.5$ Applied Shear Load for Minimum Margin

$MS_min_MFS = 0$ Applied Bending Moment for Minimum Margin

Handle Bracket-305 Bottom Bolts Analysis

The Handle Bracket (drawing SDG39135878-305) is attached to the Lower Angle Beam (drawing SDG39135764) with 4 bolts, washers and inserts. The inserts are part of the Handle Bracket.

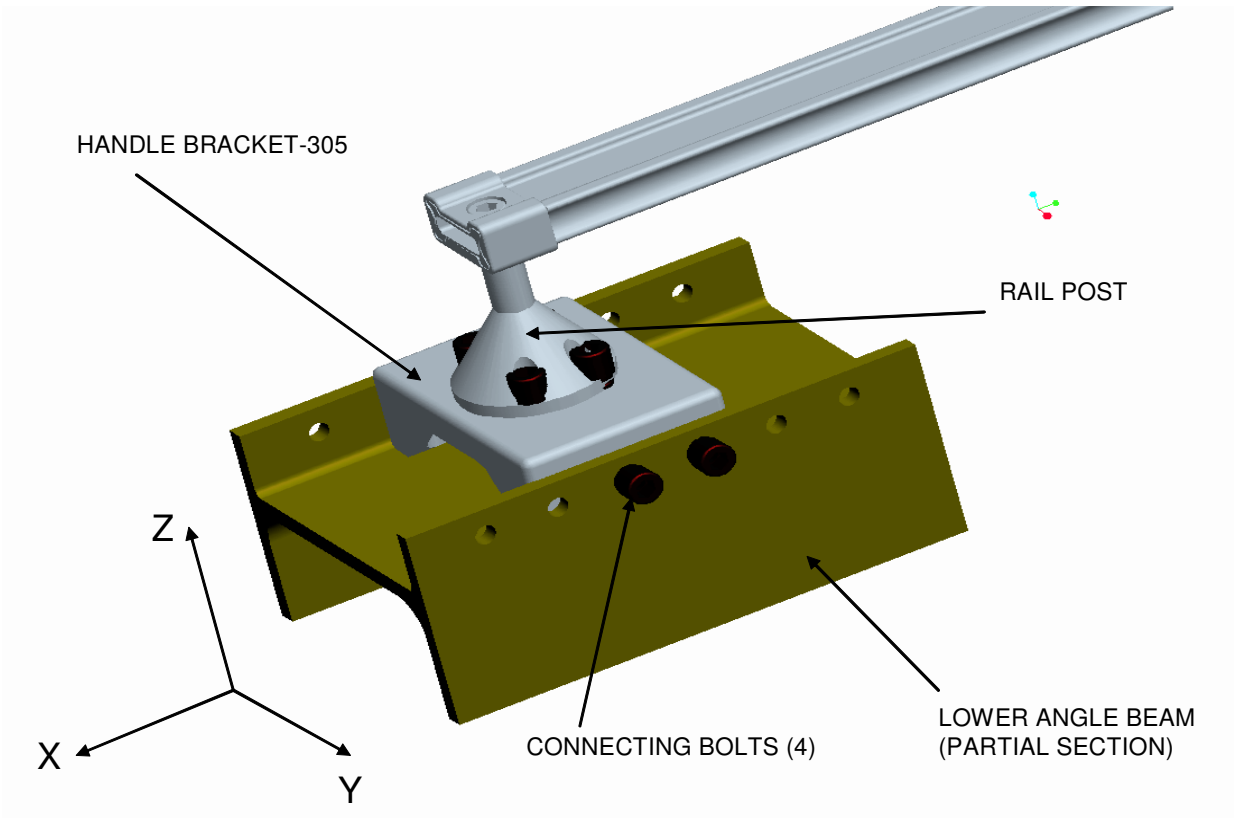

From Appendix A19, pages 23, 24 and 25 find the bolt reactions for the four cases (use maximum absolute values) :

Note that the X and Y components are the shear loads in the X and Y directions and the Z component is the normal load.

$Vx_1 := 51.08 \cdot lbf$ $Vy_1 := 48.85 \cdot lbf$ $P_1 := 77.56 \cdot lbf$ Load Case 2 Left Rail End

$Vx_2 := 100.0 \cdot lbf$ $Vy_2 := 9.265 \cdot lbf$ $P_2 := 88.35 \cdot lbf$ Load Case 6 Left Rail End

$Vx_3 := 145.8 \cdot lbf$ $Vy_3 := 92.2 \cdot lbf$ $P_3 := 170.4 \cdot lbf$ Load Case 8 Left Rail End

$Vx_4 := 66.84 \cdot lbf$ $Vy_4 := 45.22 \cdot lbf$ $P_4 := 106.7 \cdot lbf$ Load Case 10 Left Rail End

$V_1 := \sqrt{(Vx_1)^2 + (Vy_1)^2}$ $V_2 := \sqrt{(Vx_2)^2 + (Vy_2)^2}$ $V_3 := \sqrt{(Vx_3)^2 + (Vy_3)^2}$ $V_4 := \sqrt{(Vx_4)^2 + (Vy_4)^2}$

$V_1 = 70.7 \cdot lbf$ $V_2 = 100.4 \cdot lbf$ $V_3 = 172.5 \cdot lbf$ $V_4 = 80.7 \cdot lbf$

Prepared By	Name	Date		File Name
	Paul Townson	06/08/07	Engineering and Science Contract Group	Bracket-305 Bottom Bolts.xmcd
Checked By	C. Bala		*Structural Analysis Section*	Drawing No. SDG39135878
Title	**AMS-02 HANDLE BRACKET BOLTS**			

CHECK

Bolt (NAS1954C4, .2500x28, 0.2481 Dia, .675 L, .425 Lt, CRES A286, 180 KSI, Passivate)
Washer (NAS1587-4C, .531 OD, .260 ID, .078 Thk, CRES 75 KSI, Passivate)
Insert (MS51831CA202L, .2500-28, .375 L, .375 W, CRES A286 140 KSI, Passivate)

Flange 1: Lower Angle Beam
Part number: SDG39135764
Material: 7050-T7451

Flange 2: Handle Bracket
Part number: SDG39135878-305
Material: 6061-T651

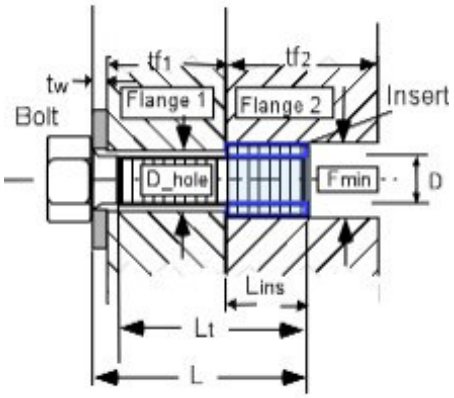

Loads

Use the bolt loads for Load Case 8 Left Rail End, since they are the highest loads.

Applied tensile load $P := 170.4 \cdot lbf$

Applied shear load $V := 172.5 \cdot lbf$

Applied bending moment $M := 0 \cdot in \cdot lbf$

Factors of Safety

Ultimate $SFu := 2.0$ Yield $SFy := 1.25$

Joint Separation $SFsep := 1.2$ Fitting factor $FF := 1.15$

Temperature data (Ref Appendix C2), On-Orbit Case

Assembly $Temp_initial := 70 \cdot deg$

Maximum $Temp_max := 139 \cdot deg$

Minimum $Temp_min := -47 \cdot deg$

Bolt and Insert Data

Nominal diameter of bolt $D := 0.250 \cdot in$

Total length of bolt $L := 0.675 \cdot in$

Threaded length $Lt := 0.425 \cdot in$

(If bolt is fully threaded, input Lt = L)

Number of threads/inch $Nt := 28 \cdot \frac{1}{in}$

Length of insert $Lins := 0.375 \cdot in$

Min. external diameter of insert $Fmin := 0.375 \cdot in$

Depth of recess for insert $lr := 0.02 \cdot in$

This file uses the calculations shown in \\escfil02\2i11_mathcad\8307_bolts\thread_data.mcd

Tue Feb 15 10:38:17 AM 2005

Washer Data

Thickness of washer $tw := 0.078 \cdot in$

Flange data

Thickness of flange 1 (Ref SDG39135764) $tf1 := 0.25 \cdot in$

Outer Diameter of washer $Dw := 0.531in$ Thickness of flange 2 $tf2 := 0.375in$ (insert length)

Inner Diameter of washer $Dwi := 0.260 \cdot in$ Diameter of hole $D_hole := 0.288 \cdot in$

(Ref SDG39135764)

Bolt head dia. across flats $dw := 0.430 \cdot in$ (used only if there is no washer)

Note: If there is no washer, tw, Dw, and Dwi should be zero.

Material Property Data

Bolt

Temperature correction factor for bolt strength ultimate $TSu_bolt := 0.97$ yield $TSy_bolt := 0.97$

(Ref. MMPDS-01, fig. 6.2.1.1.1)

Bolt ultimate tensile allowable stress $Ftu_bolt := 180000 \cdot psi$ (Ref. NAS1954C4)

Bolt ultimate shear allowable stress $Fsu_bolt := 0.6 \cdot Ftu_bolt$ $Fsu_bolt = 108000\,psi$

Bolt yield tensile allowable $Fty_bolt := 132353 \cdot psi$ (Ref. Appendix C10)

Temperature correction factor for bolt modulus $TE_bolt := 0.98$ (Ref. MMPDS-01, fig.6.2.1.1.4 (a))

Modulus of elasticity of bolt $E_bolt := \left(29.1 \cdot 10^{6} \cdot psi\right)$ (Ref. MMPDS-01, table 6.2.1.0(b))

Thermal coefficient for bolt: $\beta_bolt_hot := 9.1 \cdot 10^{-6} \cdot \frac{\frac{in}{in}}{deg}$ $\beta_bolt_cold := 8.7 \cdot 10^{-6} \cdot \frac{\frac{in}{in}}{deg}$

(Ref. MMPDS-01, fig.6.2.1.0)

Insert

Temperature correction factor for insert strength $TS_ins := 0.97$ (Ref. MMPDS-01, fig.6.2.1.1.1)

Ultimate tensile allowable stress $Ftu_ins := 140000 \cdot psi$ (Ref. MS51831)

Ultimate shear allowable stress $Fsu_ins := 0.6 \cdot Ftu_ins$

Washer

Temperature correction factor for washer modulus $TE_washer := 0.97$ (Ref. MMPDS-01, fig.6.2.1.1.4 (a))

Modulus of elasticity of washer $E_washer := \left(29.1 \cdot 10^{6} \cdot psi\right)$ (Ref. MMPDS-01, table 6.2.1.0(b))

Flanges

Stiffness of the joint depends upon number of members in the grip of the fasteners, modulus of elasticity of these members, and diameters of the bolt and the washer.

Temperature correction factor for flange 1 $Tf1E := 0.98$ (modulus) (Ref. MMPDS-01, fig.3.7.6.1.4)

Temperature correction factor for flange 2 $Tf2E := 0.98$ (modulus) (Ref. MMPDS-01, fig.3.6.2.2.4)

Aluminum 7050 and 7075 have similar properties. $Tf2s := 0.96$ (strength) (Ref. MMPDS-01, fig.3.6.2.2.1(a) and (b))

Shear strength allowable for flange $Fsu_f2 := 27000 \cdot psi$ (Ref. MMPDS-01, table 3.6.2.0(b2))

Modulus of elasticity for the parts in the joint $E_flange1 := \left(10.3 \cdot 10^{6} \cdot psi\right)$ $E_flange2 := \left(9.9 \cdot 10^{6} \cdot psi\right)$

(Ref. MMPDS-01, table 3.7.6.0(b3) and 3.6.2.0(b2))

Coefficient of thermal expansion for flanges $\beta_flange1_hot := 12.3 \cdot 10^{-6} \cdot \frac{\frac{in}{in}}{deg}$ $\beta_flange1_cold := 12.1 \cdot 10^{-6} \cdot \frac{\frac{in}{in}}{deg}$

(Ref. MMPDS-01, fig.3.7.6.0 and 3.6.2.0) $\beta_flange2_hot := 12.8 \cdot 10^{-6} \cdot \frac{\frac{in}{in}}{deg}$ $\beta_flange2_cold := 12.4 \cdot 10^{-6} \cdot \frac{\frac{in}{in}}{deg}$

Torque/Preload data

Maximum torque (65% of yield) $Tmax := 107 \cdot in \cdot lbf$ Loading plane factor: $n := 0.5$

Minimum torque (95% of max. torque) $Tmin := 101 \cdot in \cdot lbf$ Preload Uncertainty: $u := 0.25$

Torque coefficient: $k := 0.15$

This file uses the calculations shown in \\escfil02\2i11_mathcad\8307_bolts\bolt_stiffness_insert_RevC

Bolt Load data

Bolt/joint stiffness factor	$= 0.293$	Preload due to temperature	$Pthr_pos = 231.9 \cdot lbf$
Max. preload	$PLDmax = 3798.5 \cdot lbf$		$Pthr_neg = -402.6 \cdot lbf$
Min. preload	$PLDmin = 1439.1 \cdot lbf$	Uncertainty factor	$u = 0.250$
Joint separation load	$Psep = 204.480 \cdot lbf$	Torque coefficient	$k = 0.150$
Max. load on the bolt(ultimate)	$Pb = 3855.9 \cdot lbf$	Loading plane factor	$n = 0.500$
Max. load on the bolt(yield)	$Pby = 3834.4 \cdot lbf$	Thread shear pullout load of bolt or insert	$Pths = 9492.1 \cdot lbf$
Bolt ultimate tensile strength	$PAt = 6160.4 \cdot lbf$	Thread shear pullout load in parent metal	$Ppths = 5725.6 \cdot lbf$

Length_check = "Bolt length is sufficient"

Summary of Margins for bolt:

Joint separation	$MS_1 = 6.17$	Direct Thread shear Ultimate	$MS_6 = 13.61$
Direct Tension Ultimate	$MS_2 = 14.72$	Total Thread shear Ultimate	$MS_7 = 0.48$
Direct Tension Yield	$MS_3 = 17.49$	Shear Ultimate	$MS_8 = 7.6$
Total Tension Ultimate	$MS_4 = 0.6$	Bending Ultimate	$MS_9 = 10$
Total Tension Yield	$MS_5 = 0.181$	Combined shear, tension and bending ultimate	$MS_{10} = 0.593$

Determination of the smallest margin of safety for the bolt, and the failure mode:

$$MSbolt := \min(MS)$$

$MSbolt = 0.181$ Failure_Mode = "Total Tension Yield"

Bolt Fail-Safe Analysis

For bolt fail-safe analysis, the bolt with the highest load is removed and the FEM run with only three constraints.

From Appendix A19, pages 27 and 28 find the bolt reactions for the four cases (use maximum absolute values) :

Note that the X and Y components are the shear loads in the X and Y directions and the Z component is the normal load.

$Vx_1 := 70.16 \cdot lbf$ $Vy_1 := 42.56 \cdot lbf$ $P_1 := 75.79 \cdot lbf$ Load Case 2 Left Rail End

$Vx_2 := 123.0 \cdot lbf$ $Vy_2 := 7.341 \cdot lbf$ $P_2 := 88.85 \cdot lbf$ Load Case 6 Left Rail End

$Vx_3 := 316.0 \cdot lbf$ $Vy_3 := 203.1 \cdot lbf$ $P_3 := 334.8 \cdot lbf$ Load Case 8 Left Rail End

$Vx_4 := 69.77 \cdot lbf$ $Vy_4 := 53.62 \cdot lbf$ $P_4 := 101.0 \cdot lbf$ Load Case 10 Left Rail End

$$V_1 := \sqrt{(Vx_1)^2 + (Vy_1)^2} \quad V_2 := \sqrt{(Vx_2)^2 + (Vy_2)^2} \quad V_3 := \sqrt{(Vx_3)^2 + (Vy_3)^2} \quad V_4 := \sqrt{(Vx_4)^2 + (Vy_4)^2}$$

$V_1 = 82.1 \cdot lbf$ $V_2 = 123.2 \cdot lbf$ $V_3 = 375.6 \cdot lbf$ $V_4 = 88 \cdot lbf$

Use the bolt loads for Load Case 8 Left Rail End, since they are the largest loads.

Fail-safe Loads

Applied tensile load $P_FS := 334.8 \cdot lbf$

Applied shear load $V_FS := 375.6 \cdot lbf$

Applied bending moment $M_FS := 0 \cdot in \cdot lbf$

Fail-safe Factors of Safety

Ultimate $SFu_FS := 1.0$

Joint Separation $SFsep_FS := 1.0$

This file uses the calculations shown in \\escfil02\2i11_mathcad\8307_bolts\bolt_stiffness_insert_FS_RevC

Mon Feb 14 12:51:39 2005

Bolt Fail-safe Load data

Joint separation load $Psep_FS = 334.800 \cdot lbf$

Max. load on the bolt(ultimate) $Pb_FS = 3854.9 \cdot lbf$

Summary of fail-safe Margins for bolt:

Joint separation	$MS_FS_1 = 3.38$	Total Thread shear Ultimate	$MS_FS_5 = 0.49$
Direct Tension Ultimate	$MS_FS_2 = 15$	Shear Ultimate	$MS_FS_6 = 6.9$
Total Tension Ultimate	$MS_FS_3 = 0.6$	Bending Ultimate	$MS_FS_7 = 10$
Direct Thread shear Ultimate	$MS_FS_4 = 13.87$	Combined shear, tension and bending ultimate	$MS_FS_8 = 0.59$

Determination of the smallest fail-safe margin of safety for the bolt, and the failure mode:

$$MSbolt_FS := \min(MS_FS)$$

$MSbolt_FS = 0.485$ Failure_Mode_FS = "Total Thread Shear Ultimate"

Prepared By	Name	Date		File Name
	Paul Townson	06/14/07		Bracket-305 Top Bolts.mcd
Checked By	C. Bala		**Engineering and Science Contract Group** *Structural Analysis Section*	Drawing No. SDG39135878
Title	**AMS-02 HANDLE BRACKET BOLTS**			

Handle Bracket-305 Top Bolts Analysis

The Rail Post (Bracket, ISS Handrail Assembly), drawing SDG33106341, is attached to the Handle Bracket Assembly, drawing SDG39135878-305, with 4 bolts NAS 1351N3 (0.190-32UNJF-3A). The bolts are screwed into inserts MS51831CA-201L, which are part of the Handle Bracket Assembly. The analysis of the Handle Bracket Assembly is covered in Section 5.12.1.

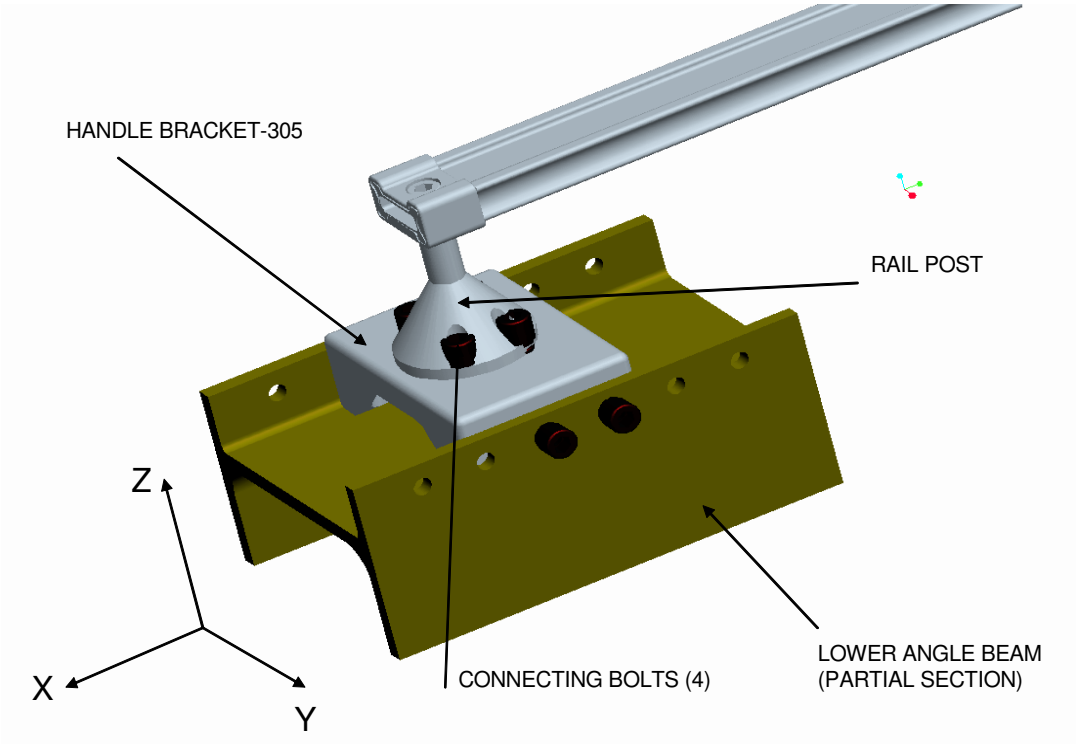

Bolt Geometry

size thread/in

$$bolt := \begin{pmatrix} 0.19 & 32 \\ 0.19 & 32 \\ 0.19 & 32 \\ 0.19 & 32 \end{pmatrix}$$

$i := 1 .. rows(bolt)$

$N_i := bolt_{i,2} \cdot \frac{1}{in}$ pitch of bolt

$D_i := bolt_{i,1} \cdot in$ bolt diameter

$i =$

1
2
3
4

$$At_i := \beta \cdot \left(\frac{D_i - 0.9743 \cdot \frac{1}{N_i}}{2} \right)^2$$ Tensile Area of bolt

$$As_i := \beta \cdot \left(\frac{D_i - 1.299038 \cdot \frac{1}{N_i}}{2} \right)^2$$ Shear Area of bolt

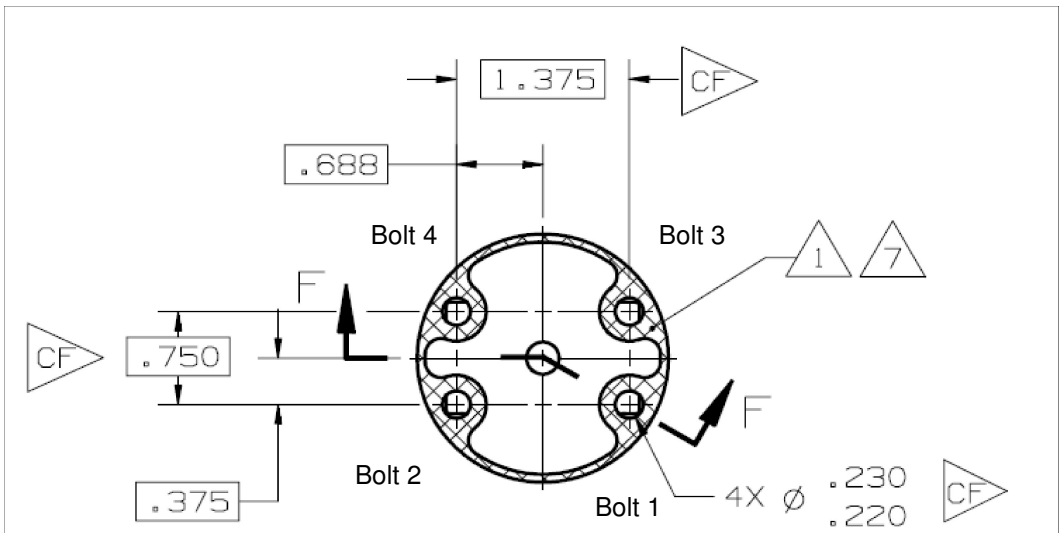

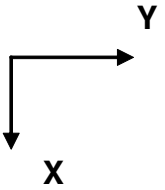

Handle Bracket Bolt Pattern

Bolt no.	x co-ord	y co-ord	z co-ord
$\begin{pmatrix} 1 \\ 2 \\ 3 \\ 4 \end{pmatrix}$	$x := \begin{pmatrix} 0.375 \\ 0.375 \\ -0.375 \\ -0.375 \end{pmatrix} \cdot in$	$y := \begin{pmatrix} 0.6875 \\ -0.6875 \\ 0.6875 \\ -0.6875 \end{pmatrix} \cdot in$	$z := \begin{pmatrix} 0 \\ 0 \\ 0 \\ 0 \end{pmatrix} \cdot in$

<u>Location of Applied Forces and Moments</u>

$xforce := 0.0in$ $\quad yforce := 0.0in$ $\quad zforce := 0.0in$

$$cgload := \begin{pmatrix} xforce \\ yforce \\ zforce \end{pmatrix} \qquad cgload = \begin{pmatrix} 0 \\ 0 \\ 0 \end{pmatrix} \cdot in$$

Center of Gravity of Bolt Group

$$xcg := \frac{\sum_i x_i}{rows(x)} \qquad xcg = 0\cdot in \qquad ycg := \frac{\sum_i y_i}{rows(y)} \qquad ycg = 0\cdot in \qquad zcg := \frac{\sum_i z_i}{rows(z)} \qquad zcg = 0\cdot in$$

$$cg_{bolt} := \begin{pmatrix} xcg \\ ycg \\ zcg \end{pmatrix} \qquad cg_{bolt} = \begin{pmatrix} 0 \\ 0 \\ 0 \end{pmatrix}\cdot in$$

Note: The bolt pattern is symmetric about all three axes.

Load Vector

$$r_{load} := cgload - cg_{bolt} \qquad r_{load} = \begin{pmatrix} 0 \\ 0 \\ 0 \end{pmatrix}\cdot in$$

Distance from CG of Bolts to Individual Bolts for shear calculations

$$r_i := \sqrt{\left(x_i - xcg\right)^2 + \left(y_i - ycg\right)^2} \qquad r = \begin{pmatrix} 0.783 \\ 0.783 \\ 0.783 \\ 0.783 \end{pmatrix}\cdot in$$

Bolt loads are retrieved from the FEM for the four worst cases (see Report 5.12.1, page 13). These loads are presented in the Table below.

Load Case	Rail End	Fx	Fy	Fz	Mx	My	Mz
2	Left	-2	160	-3	-394	-8	12
6	Left	6	2	171	3	-11	6
8	Left	219	9	1	-30	485	-61
10	Left	-3	-148	-7	523	-29	148

Database for Bolted Joint

$$data := \begin{pmatrix} 2 & 1 & -2 & 160 & -3 & -394 & -8 & 12 \\ 6 & 1 & 6 & 2 & 171 & 3 & -11 & 6 \\ 8 & 1 & 219 & 9 & 1 & -30 & 485 & -61 \\ 10 & 1 & -3 & -148 & -7 & 523 & -29 & 148 \end{pmatrix}$$

Note: In the second column of the data matrix, number 1 represents "Rail End Left".

$num_bolts := rows(bolt)$ $\quad j := 1..rows(data)$

$num_bolts = 4$

Axial Load $\quad Fz_j := data_{j,5} \cdot lbf$ $\quad$ Torsion $\quad Mz_j := data_{j,8} \cdot in \cdot lbf$

Shear in Y axis $\quad Fy_j := data_{j,4} \cdot lbf$ $\quad$ Moment about Y axis $\quad My_j := data_{j,7} \cdot in \cdot lbf$

Shear in X axis $\quad Fx_j := data_{j,3} \cdot lbf$ $\quad$ Moment about X axis $\quad Mx_j := data_{j,6} \cdot in \cdot lbf$

Applied Bending Moment at Bolts $\quad M_j := 0 \cdot in \cdot lbf$

Moment Distribution

$$M_{tot}^{\langle j \rangle} := \begin{pmatrix} Mx_j \\ My_j \\ Mz_j \end{pmatrix} + r_{load} \times \begin{pmatrix} Fx_j \\ Fy_j \\ Fz_j \end{pmatrix}$$

Use the cross-product to determine the additional moments acting on the fasteners.

$Mx_boltcg_j := M_{tot_{1,j}}$ $\quad My_boltcg_j := M_{tot_{2,j}}$ $\quad Mz_boltcg_j := M_{tot_{3,j}}$

Tension on Bolts

$$Ftdirect_{i,j} := \begin{cases} 0 \cdot lbf & \text{if } Fz_j \le 0lbf \\ \dfrac{Fz_j}{num_bolts} & \text{otherwise} \end{cases}$$

Direct tensile load calculation - (The "if" statement checks for compression)

$$Fmx_{i,j} := \begin{cases} 0 \cdot lbf & \text{if } (y_i - ycg) = 0 \cdot in \\ \dfrac{\left[Mx_boltcg_j \cdot (y_i - ycg)\right] At_i}{\sum_i \left[(y_i - ycg)^2 \cdot At_i\right]} & \end{cases}$$

$$Fmy_{i,j} := \begin{cases} 0 \cdot lbf & \text{if } (x_i - xcg) = 0 \cdot in \\ \dfrac{My_boltcg_j \cdot (x_i - xcg) \cdot At_i}{\sum_i \left[(x_i - xcg)^2 \cdot At_i\right]} & \end{cases}$$

$Ft_{i,j} := Ftdirect_{i,j} + Fmx_{i,j} + Fmy_{i,j}$ $\quad$ Total Tensile load

Shear on Bolts

Secondary shear on bolts $\quad Fs_{i,j} := \dfrac{Mz_boltcg_j \cdot r_i \cdot As_i}{\sum_i \left[(r_i)^2 \cdot (As_i)\right]}$

Direct shear loads $Fsd_{i,j} := \dfrac{\sqrt{(Fy_j)^2 + (Fx_j)^2}}{num_bolts}$

Total shear load $Fstot_{i,j} := Fs_{i,j} + Fsd_{i,j}$

The stack commands below are used to stack the Load Case (LC) and Rail End identification (ID) in ascending order per bolt. The Load Case (LC) number is located in the first column and the Rail End (ID) numbers in the second column. For each Load Case, the bolt number within the bolt pattern is added to the end of each LC number. For example, the Load Case identification number 1 will have bolt numbers 1 thru 4 attached to the end for all 4 load cases. This brings the total number of load cases to 16 (4 bolts x 4 load cases).

Load Case $LC_j := data_{j,1}$ $LC_j := LC_j \cdot 10 + 1$ Counter for number of bolts in pattern

Rail End ID $ID_j := data_{j,2}$

$LC := stack(LC, LC + 1, LC + 2, LC + 3)$

$ID := stack(ID, ID, ID, ID)$

The stack commands below are used to stack applied axial load (P), applied shear load (V), and applied moment (M) in asending order per bolt. These loads are put into an array with the Load Case (LC) number and Rail End (ID) number from above. See the "Output" file below.

$P := stack\left[(Ft^T)^{\langle 1\rangle}, (Ft^T)^{\langle 2\rangle}, (Ft^T)^{\langle 3\rangle}, (Ft^T)^{\langle 4\rangle}\right]$

$V := stack\left[(Fstot^T)^{\langle 1\rangle}, (Fstot^T)^{\langle 2\rangle}, (Fstot^T)^{\langle 3\rangle}, (Fstot^T)^{\langle 4\rangle}\right]$

$M := stack(M, M, M, M)$

The "Output" file below outputs an array from left to right starting with the Load Case (LC), Rail End Identification (ID), applied load on the bolt (P), applied shear on the bolt (V), and applied moment on the bolt (M).

$Output := augment\left(LC, ID, \dfrac{P}{lbf}, \dfrac{V}{lbf}, \dfrac{M}{in \cdot lbf}\right)$ (Note: Since the LC and ID numbers are dimensionless, the P, V, and M values are divided by their units in order to make the array dimensionless.)

Prepared By	Name	Date		File Name
	Paul Townson	06/14/07		Bracket-305 Top Bolts.mcd
Checked By	C. Bala		**Engineering and Science Contract Group** *Structural Analysis Section*	Drawing No. SDG39135878
Title	**AMS-02 HANDLE BRACKET BOLTS**			

LC ID P V M

Output =

	1	2	3	4	5
1	21	1	-148.606	43.834	0
2	61	1	36.508	3.497	0
3	81	1	312.674	35.323	0
4	101	1	170.848	84.254	0
5	22	1	137.939	43.834	0
6	62	1	34.326	3.497	0
7	82	1	334.492	35.323	0
8	102	1	-209.515	84.254	0
9	23	1	-137.939	43.834	0
10	63	1	51.174	3.497	0
11	83	1	-333.992	35.323	0
12	103	1	209.515	84.254	0
13	24	1	148.606	43.834	0
14	64	1	48.992	3.497	0
15	84	1	-312.174	35.323	0
16	104	1	-170.848	84.254	0

rows(Output) = 16

Size of the "Output" Array:

(4 bolts x 4 load cases) = 16 Load Cases

CHECK
Bolt (NAS1351N3-8, 0.1900-32, 0.50 L, HRES A286 160 KSI, Passivate)
No Washer
Insert (MS51831CA-201L, .1900-32, .312 L, .312 W, CRES A286 140 KSI, Passivate)

The array from the Output above is read.

$data := Output$

$s := 1 .. rows(data)$

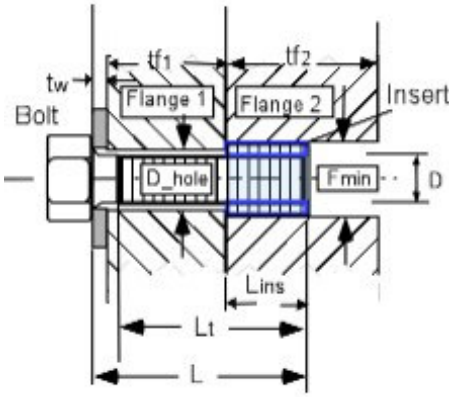

Flange 1: Bracket, ISS Handrail Assembly
Part number: SDG33106341
Material: 7075-T7351

Flange 2: Handle Bracket Assembly
Part number: SDG39135878
Material: 6061-T651

Applied tensile load $P_s := data_{s,3} \cdot lbf$

Applied shear load $V_s := data_{s,4} \cdot lbf$

Applied bending moment $M_s := data_{s,5} \cdot in \cdot lbf$

Load Case LC $LC_s := data_{s,1}$

Rail End ID $ID_s := data_{s,2}$

Factors of Safety

Ultimate $SFu := 2.0$ Yield $SFy := 1.25$

Joint Separation $SFsep := 1.2$ Fitting factor $FF := 1.15$

Temperature Data (Ref Appendix C2), On-Orbit Case

Assembly $Temp_initial := 70 \cdot deg$

Maximum $Temp_max := 139 \cdot deg$

Minimum $Temp_min := -47 \cdot deg$

Bolt and Insert Data

Nominal diameter of bolt $D := 0.190 \cdot in$

Number of threads/inch $Nt := 32 \cdot \frac{1}{in}$

Total length of bolt $L := 0.500 \cdot in$

Length of insert $Lins := 0.312 \cdot in$

Threaded length $Lt := L$

Min. external diameter of insert $Fmin := 0.312 \cdot in$

(If bolt is fully threaded, input Lt = L)

Depth of recess for insert $lr := 0.02 \cdot in$

This file uses the calculations shown in \\escfil02\2i11_mathcad\8307_bolts\thread_data.mcd

Thread Data File

Washer Data

Thickness of washer $tw := 0.0 \cdot in$

Outer Diameter of washer $Dw := 0.0in$

Inner Diameter of washer $Dwi := 0.0 \cdot in$

Bolt head dia. across flats (used only if there is no washer) $dw := 0.303 \cdot in$

Flange data

Thickness of flange 1 (Ref. SDG33106341) $tf1 := .188 \cdot in$

Thickness of flange 2 $tf2 := .312in$ (insert length)

Diameter of hole (Ref. SDG33106341) $D_hole := 0.23 \cdot in$

Material Property Data

Bolt

Temperature correction factor for bolt strength ultimate (Ref. MMPDS-01, fig. 6.2.1.1.1) $TSu_bolt := 0.97$ yield $TSy_bolt := 0.97$

Bolt ultimate tensile allowable stress $Ftu_bolt := 160000 \cdot psi$ (Ref. NAS1351N3)

Bolt ultimate shear allowable stress $Fsu_bolt := 0.6 \cdot Ftu_bolt$

Bolt yield tensile allowable $Fty_bolt := 120000 \cdot psi$

Temperature correction factor for bolt modulus $TE_bolt := .98$ (Ref. MMPDS-01, fig. 6.2.1.1.4(a))

Modulus of elasticity of bolt $E_bolt := \left(29.1 \cdot 10^{6} \cdot psi\right)$ (Ref. MMPDS-01, table 6.2.1.0(b))

Thermal coeffecient for bolt: $u_bolt_hot := 9.1 \cdot 10^{-6} \cdot \frac{\frac{in}{in}}{deg}$ $u_bolt_cold := 8.7 \cdot 10^{-6} \cdot \frac{\frac{in}{in}}{deg}$

(Ref. MMPDS-01, fig. 6.2.1.0)

Insert

Temperature correction factor for insert strength $TS_ins := .97$ (Ref. MMPDS-01, fig. 6.2.1.1.1)

Ultimate tensile allowable stress $Ftu_ins := 140000 \cdot psi$ (Ref. MS51831)

Ultimate shear allowable stress $Fsu_ins := 0.6 \cdot Ftu_ins$

Washer

Temperature correction factor for washer modulus $TE_washer := .97$ (Ref. MMPDS-01, fig. 6.2.1.1.4(a))

Modulus of elasticity of washer $E_washer := \left(29.1 \cdot 10^{6} \cdot psi\right)$ (Ref. MMPDS-01, table 6.2.1.0(b))

Flanges

Stiffness of the joint depends upon number of members in the grip of the fasteners,
Modulus of elasticity of these members, and diameters of the bolt and the washer.

Temperature correction factor for flange 1 $Tf1E := .98$ (modulus) (Ref. MMPDS-01, fig. 3.7.6.1.4)

Temperature correction factor for flange 2 $Tf2E := .98$ (modulus) (Ref. MMPDS-01, fig. 3.6.2.2.4)

$Tf2s := .96$ (strength) (Ref. MMPDS-01, fig. 3.6.2.2.1(a) and (b))

Shear Strength Allowable for flanges $Fsu_f2 := 27000 \cdot psi$ (Ref. MMPDS-01, table 3.6.2.0(b2))

Modulus of elasticity for the parts in the joint $E_flange1 := \left(10.3 \cdot 10^{6} \cdot psi\right)$ $E_flange2 := \left(9.9 \cdot 10^{6} \cdot psi\right)$

(Ref. MMPDS-01, table 3.7.6.0(b1) and 3.6.2.0(b2))

Coefficient of thermal expansion for flanges $u_flange1_hot := 12.3 \cdot 10^{-6} \cdot \frac{\frac{in}{in}}{deg}$ $u_flange2_hot := 12.8 \cdot 10^{-6} \cdot \frac{\frac{in}{in}}{deg}$

(Ref. MMPDS-01, fig. 3.7.6.0 and 3.6.2.0)

$u_flange1_cold := 12.1 \cdot 10^{-6} \cdot \frac{\frac{in}{in}}{deg}$ $u_flange2_cold := 12.4 \cdot 10^{-6} \cdot \frac{\frac{in}{in}}{deg}$

Torque/Preload Data

Maximum torque (65% of yield) $Tmax := 44.4 \cdot in \cdot lbf$ Loading plane factor: $n := .5$

Minimum torque (95% of max. torque) $Tmin := 42.2 \cdot in \cdot lbf$ Preload Uncertainty: $:= 0.25$

Torque coefficient (Lubricated): $k := 0.15$

This file uses the calculations shown in \\escfil02\2i11_mathcad\8307_bolts\multi_bolt_stiffness_insert_RevC

Insert Stiffness File

Bolt Load data

Bolt/joint stiffness factor	$= = 0.424$	Preload due to temperature	$Pthr_pos = 108.1 \cdot lbf$
Max. preload	$PLDmax = 2055.5 \cdot lbf$		$Pthr_neg = -187.3 \cdot lbf$
Min. preload	$PLDmin = 825.9 \cdot lbf$	Uncertainty factor	$= 0.25$
Joint separation load	$max(Psep) = 401.391 \cdot lbf$	Torque coefficient	$k = 0.15$
Max. load on the bolt(ultimate)	$max(Pb) = 2218.8 \cdot lbf$	Loading plane factor	$n = 0.5$
Max. load on the bolt(yield)	$max(Pby) = 2157.6 \cdot lbf$	Thread shear pullout load of bolt or insert	$Pths = 6342.1 \cdot lbf$
Bolt ultimate tensile strength	$PAt = 2987.4 \cdot lbf$	Thread shear pullout load in parent metal	$Ppths = 3963.4 \cdot lbf$

Length_check = "Bolt length is sufficient"

Summary of Margins for bolt:

Joint separation	$MS_min_{1,1} = 1.271$	Direct Thread shear Ultimate	$MS_min_{6,1} = 4.152$
Direct Tension Ultimate	$MS_min_{2,1} = 2.883$	Total Thread shear Ultimate	$MS_min_{7,1} = 0.786$
Direct Tension Yield	$MS_min_{3,1} = 3.660$	Shear Ultimate	$MS_min_{8,1} = 7.42$
Total Tension Ultimate	$MS_min_{4,1} = 0.346$	Bending Ultimate	$MS_min_{9,1} = 10$
Total Tension Yield	$MS_min_{5,1} = 0.038$	Combined shear, tension and bending ultimate	$MS_min_{10,1} = 0.346$

Determination of the smallest margin of safety for the bolt, and the failure mode:

$MSbolt := min(MS)$

$MSbolt = 0.038$ Failure_Mode = "Total Tension Yield"

$MS_min_LC = 82$	Load Case ID (8) and Bolt Number (2) for Minimum Margin
$MS_min_ID = 1$	Rail End ID for Minimum Margin
$MS_min_P = 334.5$	Applied Tensile Load for Minimum Margin
$MS_min_V = 35.3$	Applied Shear Load for Minimum Margin
$MS_min_M = 0$	Applied Bending Moment for Minimum Margin

Bolt Fail-Safe Analysis

Since bolt number 2 has the lowest margin of safety it is assumed that this bolt will be the first bolt to fail. There are now 3, NAS 1351N3 0.19-32 fasteners, holding the Post to the Bracket.

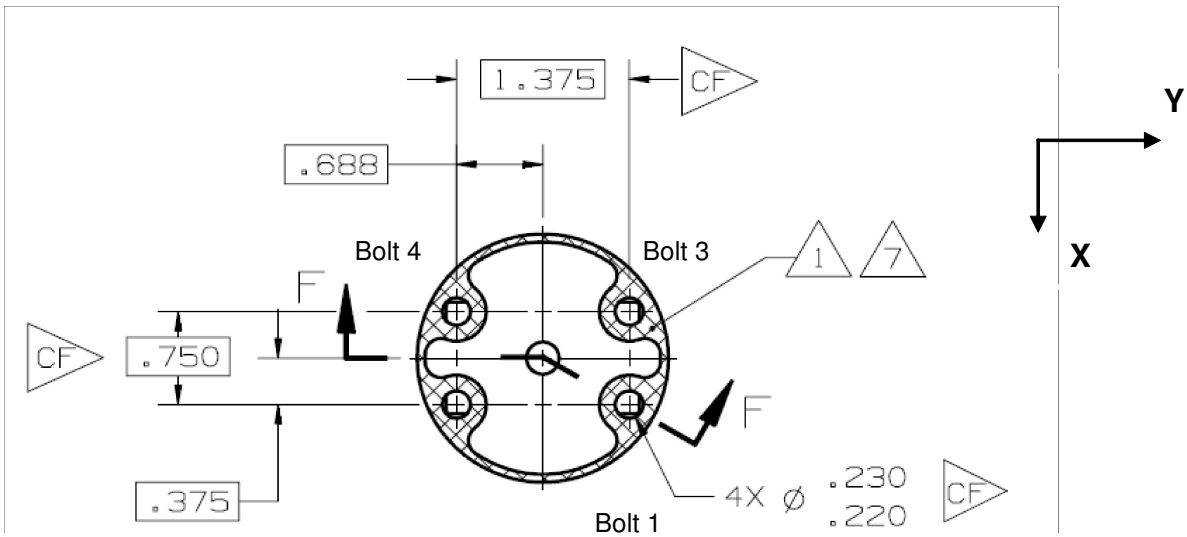

size thread/in

$$bolt2 := \begin{pmatrix} 0.19 & 32 \\ 0.19 & 32 \\ 0.19 & 32 \end{pmatrix}$$

$$s := 1 .. rows(bolt2)$$

$N2_s := bolt2_{s,2} \cdot \frac{1}{in}$ pitch of bolt $\qquad D2_s := bolt2_{s,1} \cdot in$ bolt diameter

$At2_s := \beta \cdot \left(\frac{D2_s - 0.9743 \cdot \frac{1}{N2_s}}{2} \right)^2$ Tensile Area of bolt $\qquad As2_s := \beta \cdot \left(\frac{D2_s - 1.299038 \cdot \frac{1}{N2_s}}{2} \right)^2$ Shear Area of bolt

Bolt no. x co-ord y co-ord z co-ord

$$\begin{pmatrix} 1 \\ 3 \\ 4 \end{pmatrix} \quad x2 := \begin{pmatrix} 0.375 \\ -0.375 \\ -0.375 \end{pmatrix} \cdot in \quad y2 := \begin{pmatrix} 0.6875 \\ 0.6875 \\ -0.6875 \end{pmatrix} \cdot in \quad z2 := \begin{pmatrix} 0 \\ 0 \\ 0 \end{pmatrix} \cdot in$$

Location of applied forces and moments

$xforce2 := 0.0in \qquad yforce2 := 0.0in \qquad zforce2 := 0.0in$

$$cgload2 := \begin{pmatrix} xforce2 \\ yforce2 \\ zforce2 \end{pmatrix} \qquad cgload2 = \begin{pmatrix} 0 \\ 0 \\ 0 \end{pmatrix} \cdot in$$

Center of gravity of bolt group

$$xcg2 := \frac{\sum_s x2_s}{rows(x2)} \qquad xcg2 = -0.125 \cdot in \qquad ycg2 := \frac{\sum_s y2_s}{rows(y2)} \qquad ycg2 = 0.229 \cdot in \qquad zcg2 := \frac{\sum_s z2_s}{rows(z2)} \qquad zcg2 = 0 \cdot in$$

$$cg_{bolt2} := \begin{pmatrix} xcg2 \\ ycg2 \\ zcg2 \end{pmatrix} \qquad cg_{bolt2} = \begin{pmatrix} -0.125 \\ 0.229 \\ 0 \end{pmatrix} \cdot in$$

Note: Since the z direction is into the plate the loads are shared equally between the bolts. However, due to a failure in bolt 3, the x and y directions in the bolt pattern are unsymmetric and have offsets from the center of gravity.

Load Vector

$$r_{load2} := cgload2 - cg_{bolt2} \qquad r_{load2} = \begin{pmatrix} 0.125 \\ -0.229 \\ 0 \end{pmatrix} \cdot in$$

Distance from CG of Bolts to Individual Bolts for shear calculations

$$r2_s := \sqrt{\left(x2_s - xcg2\right)^2 + \left(y2_s - ycg2\right)^2} \qquad r2 = \begin{pmatrix} 0.678 \\ 0.522 \\ 0.950 \end{pmatrix} \cdot in$$

Reading database file for bolted joint

$$data := \begin{pmatrix} 2 & 1 & -2 & 160 & -3 & -394 & -8 & 12 \\ 6 & 1 & 6 & 2 & 171 & 3 & -11 & 6 \\ 8 & 1 & 219 & 9 & 1 & -30 & 485 & -61 \\ 10 & 1 & -3 & -148 & -7 & 523 & -29 & 148 \end{pmatrix}$$

Note: The second column of the data matrix, number 1 represents "Left".

$$q := 1 .. rows(data) \qquad num_bolts2 := rows(bolt2)$$

Axial Load $Fz2_q := data_{q,5} \cdot lbf$

Torsion $Mz2_q := data_{q,8} \cdot in \cdot lbf$

Shear in Y axis $Fy2_q := data_{q,4} \cdot lbf$

Moment about Y axis $My2_q := data_{q,7} \cdot in \cdot lbf$

Shear in Z axis $Fx2_q := data_{q,3} \cdot lbf$

Moment about Z axis $Mx2_q := data_{q,6} \cdot in \cdot lbf$

Applied Bending Moment at Bolts $M2_q := 0 \cdot in \cdot lbf$

Moment Distribution

$$M_{tot2}^{\langle q \rangle} := \begin{pmatrix} Mx2_q \\ My2_q \\ Mz2_q \end{pmatrix} + r_{load} \times \begin{pmatrix} Fx2_q \\ Fy2_q \\ Fz2_q \end{pmatrix}$$

Use the cross-product to determine the additional moments acting on the fasteners.

$Mx_boltcg2_q := M_{tot2_{1,q}}$ $\quad My_boltcg2_q := M_{tot2_{2,q}}$ $\quad Mz_boltcg2_q := M_{tot2_{3,q}}$

Tension on bolts

$$Ftdirect2_{s,q} := \begin{cases} 0 \cdot lbf & \text{if } Fz2_q \le 0lbf \\ \dfrac{Fz2_q}{num_bolts2} & \text{otherwise} \end{cases}$$

Direct tensile load calculation

$$Fmx2_{s,q} := \begin{cases} 0 \cdot lbf & \text{if } \left(y2_s - ycg2\right) = 0 \cdot in \\ \dfrac{\left[Mx_boltcg2_q \cdot \left(y2_s - ycg2\right)\right] At2_s}{\sum_s \left[\left(y2_s - ycg2\right)^2 \cdot At2_s\right]} & \text{otherwise} \end{cases}$$

$$Fmy2_{s,q} := \begin{cases} 0 \cdot lbf & \text{if } \left(x2_s - xcg2\right) = 0 \cdot in \\ \dfrac{My_boltcg2_q \cdot \left(x2_s - xcg2\right) \cdot At2_s}{\sum_s \left[\left(x2_s - xcg2\right)^2 \cdot At2_s\right]} & \text{otherwise} \end{cases}$$

$$Ft2_{s,q} := Ftdirect2_{s,q} + Fmx2_{s,q} + Fmy2_{s,q}$$

Total Tensile load

Shear on bolts

Secondary shear on bolts

$$Fs2_{s,q} := \frac{Mz_boltcg2_q \cdot r2_s \cdot As2_s}{\sum_s \left[\left(r2_s\right)^2 \cdot \left(As2_s\right)\right]}$$

Direct shear Loads $Fs2d_{s,q} := \dfrac{\sqrt{\left(Fy2_q\right)^2 + \left(Fx2_q\right)^2}}{num_bolts}$

Total shear load $Fstot2_{s,q} := Fs2_{s,q} + Fs2d_{s,q}$ (Note: The Fs variable is the secondary shear and calculated above.)

Load Case $LC2_q := data_{q,1}$ $LC2_q := LC2_q \cdot 10 + 1$ Counter for number of bolts in pattern

Rail End ID $ID2_q := data_{q,2}$

The stack command below is used to stack the Load Case Number (LC2) and Rail End (ID2) in asending order per bolt. Note: bolt number 2 is not included.

$LC2 := stack(LC2, LC2 + 2, LC2 + 3)$

$ID2 := stack(ID2, ID2, ID2)$

The stack commands below are used to stack apllied axial load (P2), applied shear load (V2), and applied moment (M2) in asending order per bolt. These loads are put into an array with the Load Case (LC2) and Rail End (ID2) from above. See the "Output" file below. Notice that there are only 3 bolts, since bolt number 3 is not included.

$P2 := stack\left[\left(Ft2^T\right)^{\langle 1\rangle}, \left(Ft2^T\right)^{\langle 2\rangle}, \left(Ft2^T\right)^{\langle 3\rangle}\right]$

$V2 := stack\left[\left(Fstot2^T\right)^{\langle 1\rangle}, \left(Fstot2^T\right)^{\langle 2\rangle}, \left(Fstot2^T\right)^{\langle 3\rangle}\right]$

$M2 := stack(M2, M2, M2)$

The "Output2" file below outputs an array from left to right starting with the Load Case number (LC2), Rail End Identification (ID2), applied load on the bolt (P2), applied shear on the bolt (V2), and applied moment on the bolt (M2).

$Output2 := augment\left(LC2, ID2, \dfrac{P2}{lbf}, \dfrac{V2}{lbf}, \dfrac{M2}{in \cdot lbf}\right)$ (Note: Since the LC2 and ID2 numbers are dimensionless, the P2, V2, and M2 values are divided by their units in order to make the array dimensionless.)

Output2 =

	LC2	ID2	P2	V2	M2
	1	2	3	4	5
1	21	1	-153.939	44.98	0
2	61	1	43.424	4.07	0
3	81	1	636.091	29.497	0
4	101	1	151.515	98.39	0
5	23	1	-137.939	43.834	0
6	63	1	65.424	3.497	0
7	83	1	-333.909	35.323	0
8	103	1	209.515	84.254	0
9	24	1	291.879	46.975	0
10	64	1	62.152	5.067	0
11	84	1	-301.182	19.356	0
12	104	1	-361.03	122.993	0

$rows(Output2) = 12$

Size of the "Output" Array:

(3 bolts x 4 load cases) = 12 load cases

Bolt Fail-safe Results

The array from the Output2 is read:

$data_fs := Output2$

$s := 1 .. rows(data_fs)$

Fail-safe Loads

Applied tensile load $P_FS_s := data_fs_{s,3} \cdot lbf$ $ID_FS_s := data_fs_{s,1}$

Applied shear load $V_FS_s := data_fs_{s,4} \cdot lbf$ $LC_FS_s := data_fs_{s,2}$

Applied bending moment $M_FS_s := data_fs_{s,5} \cdot in \cdot lbf$

Fail-safe Factors of Safety

Ultimate $SFu_FS := 1.0$

Joint Separation $SFsep_FS := 1.0$

This file uses the calculations shown in \\escfil02\2i11_mathcad\8307_bolts\ multi_bolt_stiffness_insert_FS_RevC

Fail-Safe Stiffness File

Bolt Fail-safe Load data

Joint separation load $max(Psep_FS) = 636.091 \cdot lbf$ $max(P_FS) = 636.091\ lbf$

Max. load on the bolt(ultimate) $max(Pb_FS) = 2210.8 \cdot lbf$ $max(V_FS) = 122.993\ lbf$

Summary of fail-safe Margins for bolt:

Joint separation	$MS_minFS_{1,1} = 0.433$	Total Thread shear Ultimate	$MS_minFS_{5,1} = 0.793$
Direct Tension Ultimate	$MS_minFS_{2,1} = 3.084$	Shear Ultimate	$MS_minFS_{6,1} = 10.54$
Total Tension Ultimate	$MS_minFS_{3,1} = 0.3513$	Bending Ultimate	$MS_minFS_{7,1} = 10$
Direct Thread shear Ultimate	$MS_minFS_{4,1} = 4.42$	Combined shear, tension and bending ultimate	$MS_minFS_{8,1} = 0.3513$

Determination of the smallest fail-safe margin of safety for the bolt, and the failure mode:

$MSbolt_FS := \min(MS_FS)$

$MSbolt_FS = 0.351$ Failure_Mode_FS = "Combined Shear Tension Bending Ultimate"

$MS_min_IDFS = 81$ Load Case ID (8) and Bolt Number (1) for Minimum Margin

$MS_min_LCFS = 1$ Rail End ID for Minimum Margin

$MS_min_PFS = 636.1$ Applied Tensile Load for Minimum Margin

$MS_min_VFS = 29.5$ Applied Shear Load for Minimum Margin

$MS_min_MFS = 0$ Applied Bending Moment for Minimum Margin

5.13 Interface Panel A

Section 5.13: Interface Panel A Stress Analysis

Margins of Safety

Table 5.13-1: Minimum Margin of Safety Summary

Part / Dwg Number	Part Name / Description	Material & Heat Treatment	Critical Load Condition	Failure Mode	Margin of Safety	Reference Page
SEG39137684	Interface Panel A	AL ALY 7075-T73	Kickload	Ultimate	0.136 (u)	5.13-19

Table 5.13-2: Fasteners Minimum Margin of Safety Summary

Part / Dwg Number	Part Name / Description	Material & Heat Treatment	Failure Mode	Margin of Safety	Reference Page
NAS1153E36	Fasteners connecting Front Sub-Panel to Standoff to Rear Sub-Panel	A286	Combined Shear, Tension, Bending Ultimate	0.07 (u)	5.13-42

Notes:

1. Factors of Safety are 2.0 for Ultimate and 1.25 for Yield.
2. Boundary conditions are at eleven AMS-2 bolts distributed as three along the upper edge and eight along the lower edge.
3. 64 launch load cases, 64 landing load cases and 3 kickload cases were applied to the IPA.
4. u = ultimate

Factors of Safety

The hardware is designed with a yield factor of 1.25 and an ultimate factor of 2.0 against limit loads.

Description of IPA Structure

Interface Panel A (IPA) provides structural support for nine cable connectors. The cables are routed from the ROEU to front panel of the IPA. Cables attached to the back panel of the IPA distribute the power and data signals to the appropriate hardware. The IPA consists of several thin aluminum panels that are separated and stiffened by open-section beams. Bolts are used to connect the various panels and beams.

The IPA attaches to the USS-02 (Unique Support Structure -02) with three fasteners at the upper trunnion bridge beam and eight fasteners at the lower trunnion bridge beam as shown in Figure 5.13-1. Note that two of the eight fasteners at the lower interface location are shared with an EVA hand rail.

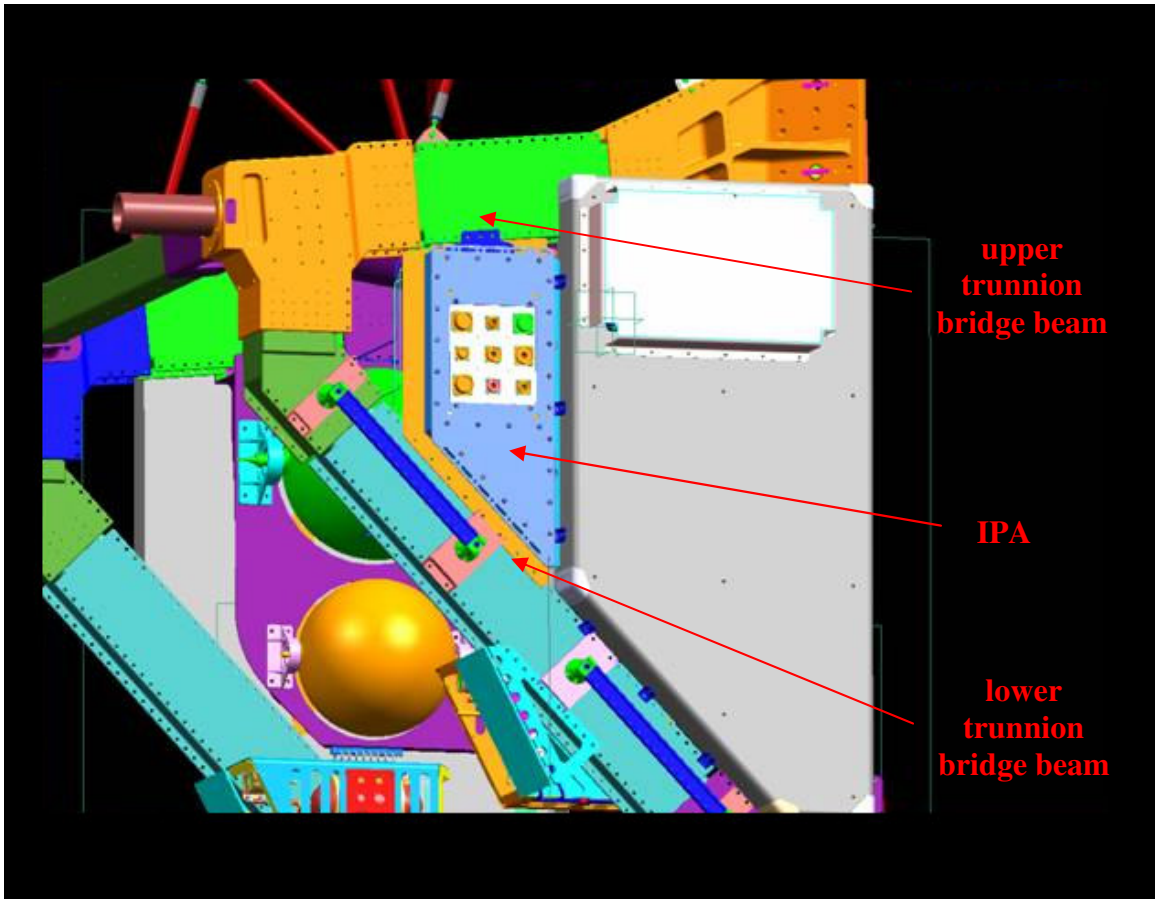

Figure 5.13-1 Interface Panel A attached to USS-02 upper and lower trunnion bridge beams

Description of the IPA Math Model

The FEMAP modeling software was used to generate a finite element model of the IPA for structural analysis using NASTRAN.

1. The geometry of each part was identified by a CAD model (Parasolid format) that was provided by the design group. This geometry was used as the basis for generating the finite element mesh. Views of the IPA assembly from the CAD model are shown in Figures 5.13-2 and 5.13-3.

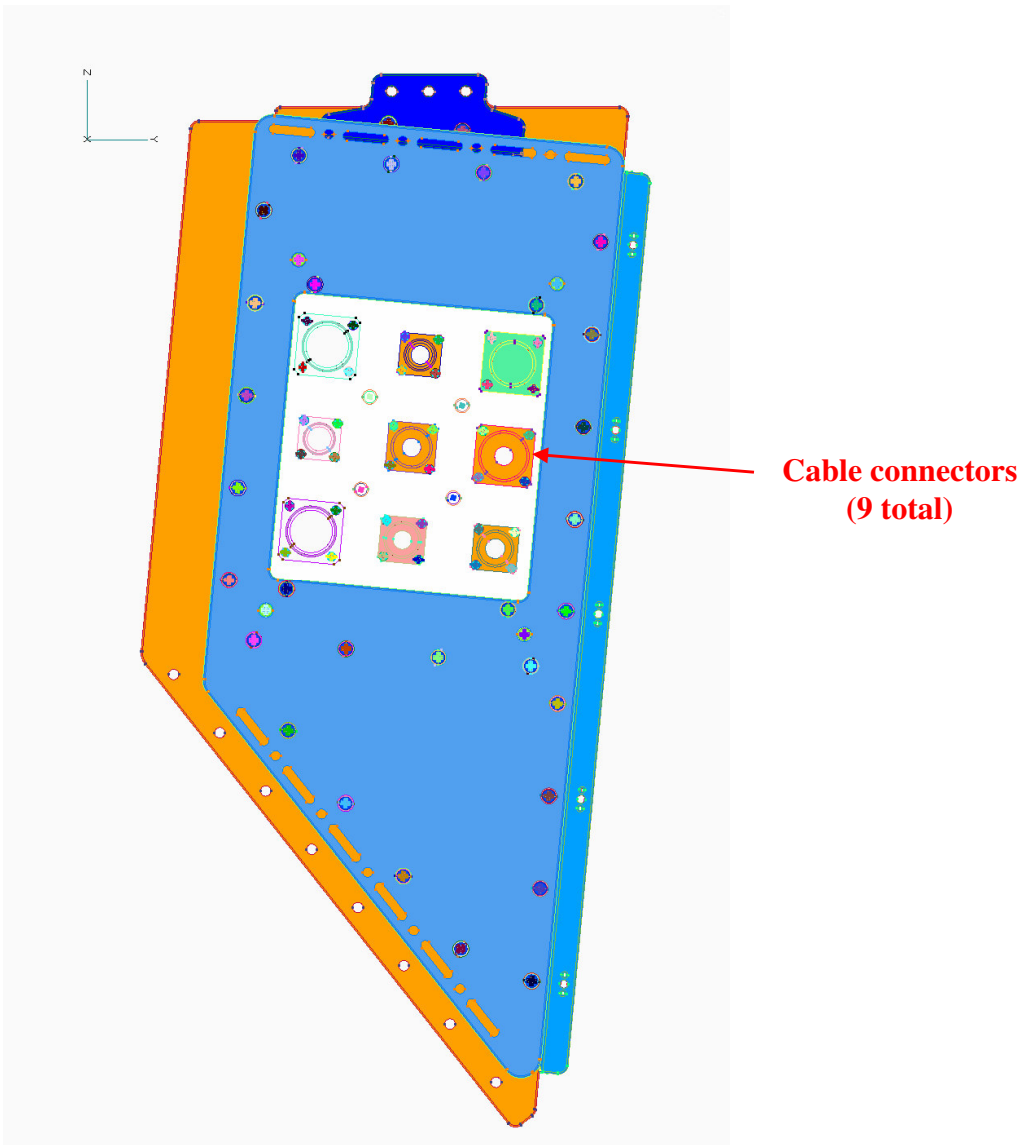

Figure 5.13-2 Front view of IPA with cover plate and cable connectors (CAD Model)

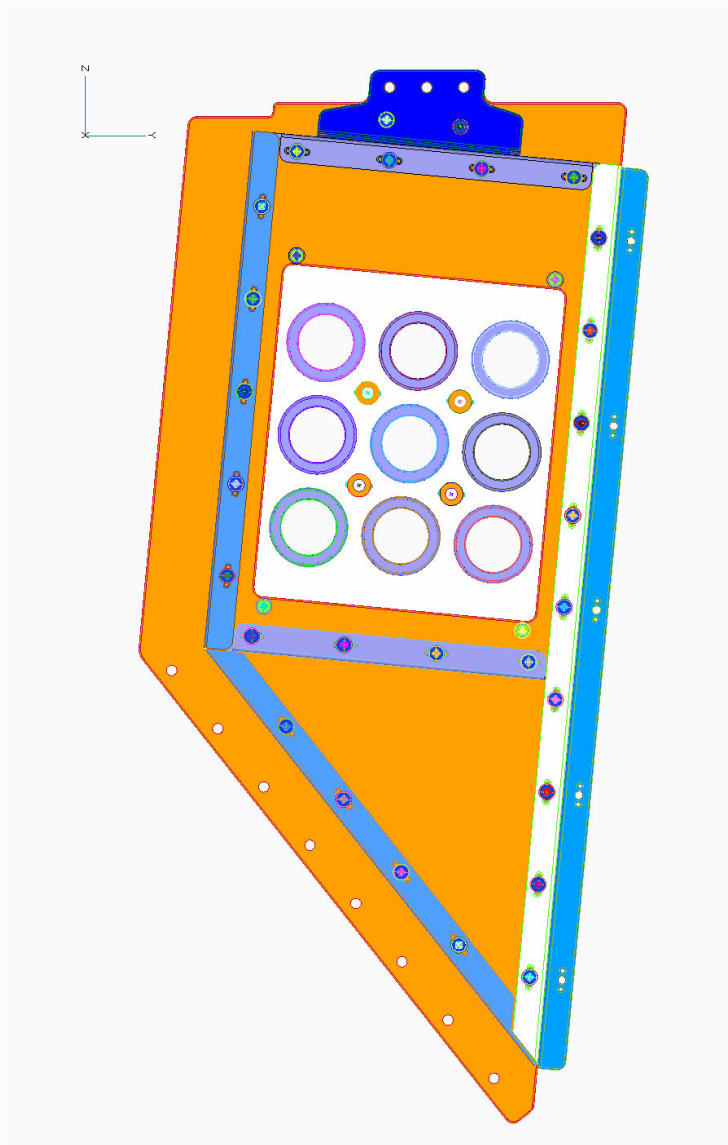

Figure 5.13-3 Front view of IPA with cover plate removed (CAD Model)

2. The front, back, and sub-panels are modeled using plate elements (CQUAD4 and CTRIA3).
3. The web and flanges of the beams are modeled using plate elements (CQUAD4 and CTRIA3). Rigid elements (RBE2) are used to connect the flanges to the web for each beam.
4. The bolts are represented by CBUSH elements with stiffness values for the three translation directions that represent axial and shear stiffness.

5. The standoffs that provide separation between the front and rear sub-panel assemblies are modeled with beam (CBAR) elements.
6. For stand-alone assessments, constraints are applied to the model at the locations where the IPA is bolted to the USS beams. There are eight constrained nodes along the lower edge of the IPA and three constrained nodes along the upper edge. When the IPA model is integrated with the USS model, the constraints are replaced by CBUSH elements that represent the bolts connecting the IPA to the USS.
7. The cable connectors that attach to the front sub-panel assembly are model with mass elements and rigid elements that connect to the nodes around the circumference of each cutout.

A summary from NASTRAN of the finite elements comprising the model is provided below.

```
          M O D E L   S U M M A R Y

     NUMBER OF GRID     POINTS   =    55284

     NUMBER OF CBAR     ELEMENTS =        4
     NUMBER OF CBUSH    ELEMENTS =       71
     NUMBER OF CONM2    ELEMENTS =        9
     NUMBER OF CQUAD4   ELEMENTS =    51186
     NUMBER OF CTRIA3   ELEMENTS =       51

     NUMBER OF RBE2     ELEMENTS =     1904
```

The weight of the IPA is 13.2 pounds excluding the cable connectors. This is an estimate based on the CAD model. The weight for the finite element model (as computed by FEMAP) is 13.5 pounds. The complete mass property output from FEMAP is shown below.

Check Mass Properties
53225 Element(s) Selected...

```
Mass                          Center of Gravity in CSys 0
Structural    =    0.0350358  X=     6.850224  Y=    -14.92744  Z=    -11.75095
NonStructural=           0.  X=           0.  Y=           0.  Z=           0.
Total Mass    =    0.0350358  X=     6.850224  Y=    -14.92744  Z=    -11.75095

Inertias about CSys 0                     Inertias about C.G. in CSys 0
Ixx =      14.2106  Ixy=    -3.580659     Ixx =     1.565735  Ixy=   0.00196897
Iyy =     7.760062  Iyz=     6.084971     Iyy =     1.278085  Iyz=   -0.0607058
Izz =     9.797274  Izx=     -2.80684     Izz =     0.346236  Izx=    0.0134194
```

A measured value of the weight is not currently available for comparison with the math models because manufacturing and assembly of the components is not complete.

For reference purposes, a front-view of the finite element math model is shown in Figure 5.13-4.

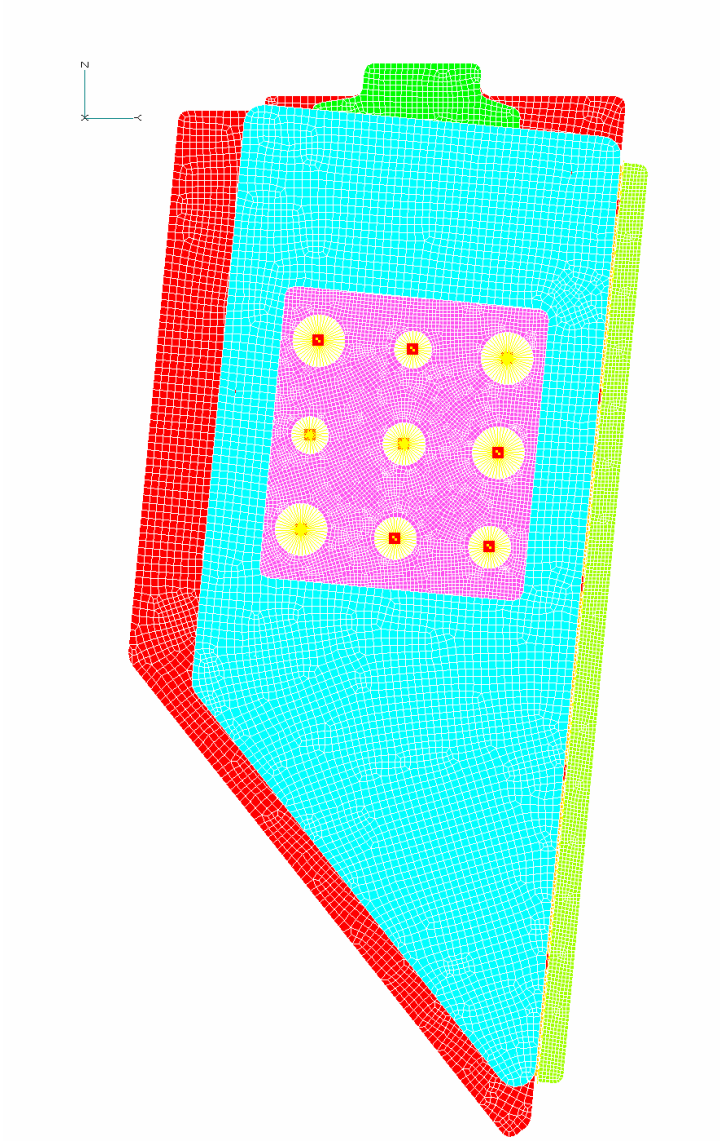

Figure 5.13-4 Front view of the IPA finite element math model

Checks for the IPA Math Model

FEMAP and NASTRAN were used to check for element distortion. All of the checks were satisfactory except for a small percentage of CQUAD elements that had an aspect ratio and/or taper ratio that exceeded the default threshold values suggested by NASTRAN. It is the judgment of the modeler that the distortion is not severe enough to cause erroneous results and does not warrant the effort required to improve the mesh.

Constraint and grounding checks were performed using MSC Nastran. The results of these checks are shown below for an unconstrained model. The model passes the checks at all degree-of-freedom set levels with sufficiently low strain energy to indicate that there are no unintended constraints or grounding issues.

```
*** USER INFORMATION MESSAGE 7570 (GPWG1D)
    RESULTS OF RIGID BODY CHECKS OF MATRIX KGG      (G-SET)  FOLLOW:
    PRINT RESULTS IN ALL SIX DIRECTIONS AGAINST THE LIMIT OF   7.000309E-04
          DIRECTION        STRAIN ENERGY        PASS/FAIL
          ---------        -------------        ---------
            1               5.687798E-08          PASS
            2               2.516872E-07          PASS
            3               1.025082E-07          PASS
            4               1.970044E-05          PASS
            5               7.293035E-07          PASS
            6               2.548937E-06          PASS
    SOME POSSIBLE REASONS MAY LEAD TO THE FAILURE:
      1. CELASI ELEMENTS CONNECTING TO ONLY ONE GRID POINT;
      2. CELASI ELEMENTS CONNECTING TO NON-COINCIDENT POINTS;
      3. CELASI ELEMENTS CONNECTING TO NON-COLINEAR DOF;
      4. IMPROPERLY DEFINED DMIG MATRICES;


*** USER INFORMATION MESSAGE 7570 (GPWG1D)
    RESULTS OF RIGID BODY CHECKS OF MATRIX KNN      (N-SET)  FOLLOW:
    PRINT RESULTS IN ALL SIX DIRECTIONS AGAINST THE LIMIT OF   5.496392E-03
          DIRECTION        STRAIN ENERGY        PASS/FAIL
          ---------        -------------        ---------
            1               5.621587E-08          PASS
            2               2.485385E-07          PASS
            3               1.080962E-07          PASS
            4               1.810645E-05          PASS
            5               8.911510E-08          PASS
            6               2.556295E-06          PASS
    SOME POSSIBLE REASONS MAY LEAD TO THE FAILURE:
      1. MULTIPOINT CONSTRAINT EQUATIONS WHICH DO NOT SATISFY RIGID-BODY MOTION;
      2. RBE3 ELEMENTS FOR WHICH THE INDEPENDENT DEGREE-OF-FREEDOM CANNOT DESCRIBE
         ALL POSSIBLE RIGID-BODY MOTIONS.


*** USER INFORMATION MESSAGE 7570 (GPWG1D)
    RESULTS OF RIGID BODY CHECKS OF MATRIX KFF      (F-SET)  FOLLOW:
    PRINT RESULTS IN ALL SIX DIRECTIONS AGAINST THE LIMIT OF   5.496392E-03
          DIRECTION        STRAIN ENERGY        PASS/FAIL
          ---------        -------------        ---------
            1               5.621587E-08          PASS
            2               2.485385E-07          PASS
            3               1.080962E-07          PASS
            4               1.810645E-05          PASS
            5               8.911510E-08          PASS
            6               2.556295E-06          PASS
    SOME POSSIBLE REASONS MAY LEAD TO THE FAILURE:
      1. CONSTRAINTS WHICH PREVENT RIGID-BODY MOTION.


*** USER INFORMATION MESSAGE 7570 (GPWG1D)
    RESULTS OF RIGID BODY CHECKS OF MATRIX KAA1     (A-SET)  FOLLOW:
    PRINT RESULTS IN ALL SIX DIRECTIONS AGAINST THE LIMIT OF   5.496392E-03
          DIRECTION        STRAIN ENERGY        PASS/FAIL
          ---------        -------------        ---------
            1               5.621587E-08          PASS
            2               2.485385E-07          PASS
```

```
          3              1.080962E-07          PASS
          4              1.810645E-05          PASS
          5              8.911510E-08          PASS
          6              2.556295E-06          PASS
IF THE MODEL HAS PASSED THE PREVIOUS CHECKS FOR THE G-SET AND N-SET,
THEN SOME POSSIBLE CAUSES ARE:
  1. THE MODEL IS NOT INTENDED TO BE FREE-FREE WHICH INDICATES THAT THE MODEL IS
     PROPERLY CONSTRAINED TO GROUND;
  2. THE REFERENCE GRID POINT (GRID=GID ON THE GROUNDCHECK COMMAND) IS LOCATED
     TOO FAR FROM THE MODEL'S CENTER OF GRAVITY. IT IS RECOMMENDED THAT THE
     REFERENCE GRID POINT BE LOCATED AS CLOSE AS POSSIBLE TO THE MODEL'S CENTER
     OF GRAVITY OF THE MODEL (SEE THE GRID POINT WEIGHT GENERATOR OUTPUT);
  3. PARAM,AUTOSPC,YES CONSTRAINS NEAR-SINGULAR DEGREES-OF-FREEDOM. WHEN A
     FINITE ELEMENT MODEL WITH AUTOSPC FAILS THE A-SET CHECK, IT IS NOT EVIDENT
     THAT GROUNDING HAS OCCURRED. THE USE OF PARAM,SNORM WILL NOT ELIMINATE THE
     SPURIOUS FAILURE.
```

A modal analysis was performed using NASTRAN to determine the modal frequencies and confirm that the model has appropriate rigid-body modes. A list of the rigid-body modes and elastic modes are provided below.

R E A L E I G E N V A L U E S

MODE NO.	EXTRACTION ORDER	EIGENVALUE	RADIANS	CYCLES	GENERALIZED MASS	GENERALIZED STIFFNESS
1	1	-1.626237E-05	4.032663E-03	6.418182E-04	1.000000E+00	-1.626237E-05
2	2	-7.522649E-06	2.742745E-03	4.365214E-04	1.000000E+00	-7.522649E-06
3	3	2.329522E-06	1.526277E-03	2.429145E-04	1.000000E+00	2.329522E-06
4	4	1.249298E-05	3.534541E-03	5.625396E-04	1.000000E+00	1.249298E-05
5	5	1.490180E-05	3.860285E-03	6.143834E-04	1.000000E+00	1.490180E-05
6	6	1.721663E-05	4.149292E-03	6.603803E-04	1.000000E+00	1.721663E-05
7	7	3.534344E-05	5.945035E-03	9.461817E-04	1.000000E+00	3.534344E-05
8	8	3.677752E+05	6.064447E+02	9.651867E+01	1.000000E+00	3.677752E+05
9	9	9.190506E+05	9.586713E+02	1.525773E+02	1.000000E+00	9.190506E+05
10	10	1.343090E+06	1.158917E+03	1.844474E+02	1.000000E+00	1.343090E+06
11	11	1.491253E+06	1.221169E+03	1.943550E+02	1.000000E+00	1.491253E+06

The highlighted rows show that there are seven modes with “zero” frequency. An examination of the mode shapes for each of these “zero frequency” modes shows that six of the modes correspond to the standard rigid-body modes of an unconstrained structure. The seventh “zero frequency” mode corresponds to rigid-body rotation of the upper stiffener panel about an axis through the two bolts that connect it to the rear panel. When the model is constrained for structural analysis the upper stiffener panel is constrained at three additional locations that eliminate this seventh rigid-body mode. The first elastic mode of the structure has a frequency of 96.5 hertz for the unconstrained condition. The results of the modal analysis indicate that the math model is responding dynamically as expected.

Overview of the IPA Loads Analyses

The stand-alone math model of the IPA described in the previous sections was used to assess the structural for the EVA kick-loads as specified in SSP-57003. The EVA kick-load is defined as an inadvertent bump by a crew member that induces a force of 125 pounds concentrated in a 0.5-inch diameter circular area.

An initial assessment of the Shuttle flight loads was made using the secondary structure load factors provided in Table 4-4 of the AMS-02 Structural Verification Plan (JSC-28792, Rev. E). However, these loads are very conservative and the results of the analysis showed that the structural margins were unacceptable. The load factors are provided in Table 5.13-3 for reference.

Table 5.13-3 Launch/Landing Design Limit Load Factors for Small Secondary Structures

Weight (pounds)	Load Factor (g)
<20	40
20-50	31
50-100	22
100-200	17
200-500	13

To reduce the conservatism for the flight loads assessment, the IPA math model was integrated with the math model of the full AMS-02 payload. The liftoff and landing load factors from the AMS-02 design coupled loads analysis (as specified in Table 5-2 of the AMS-02 SVP) were applied to the integrated math model. These loads are provided in Table 5.13-4 for reference.

Table 5.13-4 Second DCLA Liftoff and Landing Load Factors

Event	Nx	Ny	Nz	Rx	Ry	Rz
Liftoff	-3.7 / 0.4	-1.4 / 1.6	-1.4 / 1.5	-4.5 / 4.1	-8.4 /	-3.9 / 4.1
Abort Landing	-1.2 / 1.3	-0.7 / 0.6	-2.1 / 5.6	-5.2 / 4.7	-10.7 / 13.9	-6.0 / 4.8

A static loads analysis was performed using NASTRAN with 64 subcases representing all combinations of the liftoff load factors and 64 subcases representing all combinations of the landing load factors. Loads and stresses were then recovered from this integrated

analysis for the IPA interface and internal components and used to compute the structural strength margins.

The next sections provide a description of the integrated finite element model and the checks that were performed.

Description of the Integrated IPA and Full Payload Math Model

The 2-06 version of the AMS-02 loads model was used to represent the payload in the integrated model. The IPA math model described in the preceding sections was connected to the payload model using two rigid elements (RBE2). The independent nodes for the two rigid elements are the nodes on the beam elements representing the IPA interface with the upper trunnion bridge beam and the lower trunnion bridge beam. The dependent nodes of the rigid elements are the IPA nodes that represent the interface bolt locations. Views of the full payload math model are shown in Figures 5.13-5 and 5.13-6.

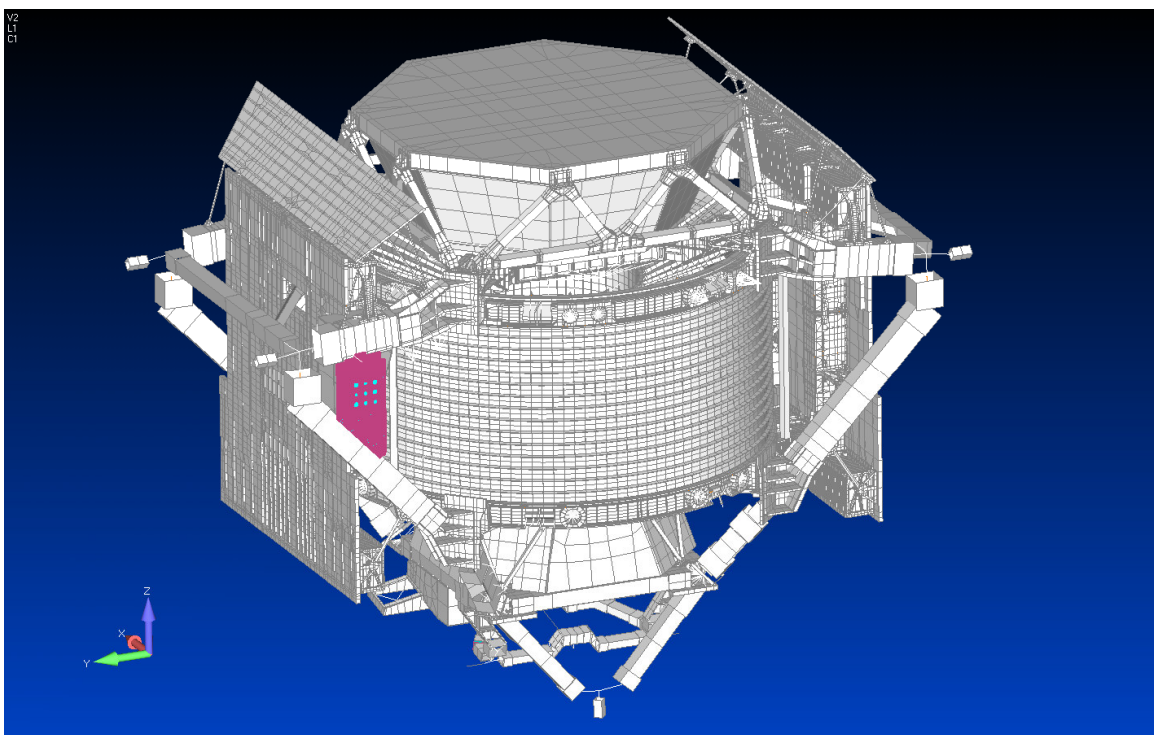

Figure 5.13-5 Finite element model of IPA integrated with full payload

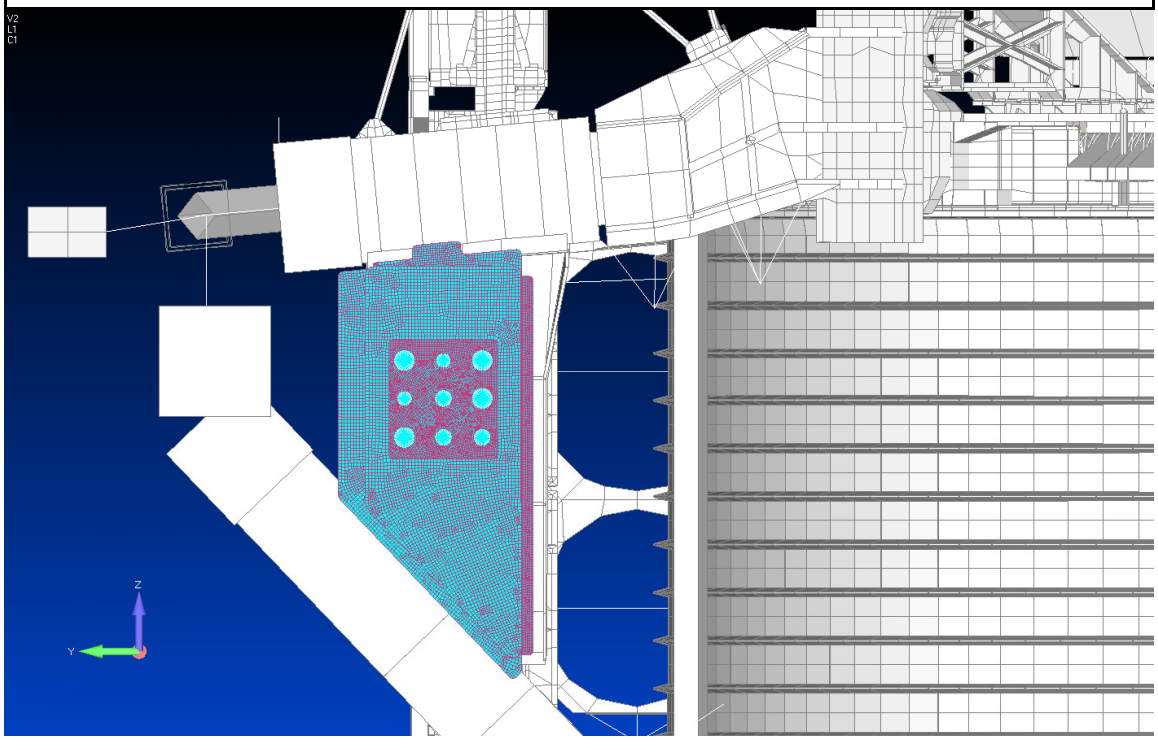

Figure 5.13-6 Finite element model of IPA integrated with full payload, zoomed view

Checks for the Integrated IPA and Full Payload Math Model

Constraint and grounding checks were performed using MSC Nastran. The results of these checks are shown below for an unconstrained model. The model passes the checks at all degree-of-freedom set levels with sufficiently low strain energy to indicate that there are no unintended constraints or grounding issues.

```
*** USER INFORMATION MESSAGE 7570 (GPWG1D)
     RESULTS OF RIGID BODY CHECKS OF MATRIX KGG      (G-SET)  FOLLOW:
     PRINT RESULTS IN ALL SIX DIRECTIONS AGAINST THE LIMIT OF   4.703487E-01
           DIRECTION        STRAIN ENERGY        PASS/FAIL
           ---------        -------------        ---------
             1               2.241968E-06          PASS
             2               1.058008E-06          PASS
             3               4.164460E-06          PASS
             4               6.646296E-03          PASS
             5               2.698223E-03          PASS
             6               2.730940E-03          PASS
     SOME POSSIBLE REASONS MAY LEAD TO THE FAILURE:
       1. CELASI ELEMENTS CONNECTING TO ONLY ONE GRID POINT;
       2. CELASI ELEMENTS CONNECTING TO NON-COINCIDENT POINTS;
       3. CELASI ELEMENTS CONNECTING TO NON-COLINEAR DOF;
       4. IMPROPERLY DEFINED DMIG MATRICES;

*** USER INFORMATION MESSAGE 7570 (GPWG1D)
     RESULTS OF RIGID BODY CHECKS OF MATRIX KNN      (N-SET)  FOLLOW:
     PRINT RESULTS IN ALL SIX DIRECTIONS AGAINST THE LIMIT OF   9.176609E-01
           DIRECTION        STRAIN ENERGY        PASS/FAIL
           ---------        -------------        ---------
             1               1.497954E-06          PASS
```

```
            2              8.091323E-07          PASS
            3              3.934985E-06          PASS
            4              5.049321E-03          PASS
            5              1.058481E-03          PASS
            6              4.531330E-04          PASS
     SOME POSSIBLE REASONS MAY LEAD TO THE FAILURE:
       1. MULTIPOINT CONSTRAINT EQUATIONS WHICH DO NOT SATISFY RIGID-BODY MOTION;
       2. RBE3 ELEMENTS FOR WHICH THE INDEPENDENT DEGREE-OF-FREEDOM CANNOT DESCRIBE
          ALL POSSIBLE RIGID-BODY MOTIONS.

*** USER INFORMATION MESSAGE 7570 (GPWG1D)
     RESULTS OF RIGID BODY CHECKS OF MATRIX KFF      (F-SET)  FOLLOW:
     PRINT RESULTS IN ALL SIX DIRECTIONS AGAINST THE LIMIT OF   9.176609E-01
           DIRECTION        STRAIN ENERGY        PASS/FAIL
           ---------        -------------        ---------
            1               1.497954E-06          PASS
            2               8.091323E-07          PASS
            3               3.934985E-06          PASS
            4               5.049321E-03          PASS
            5               1.058481E-03          PASS
            6               4.531330E-04          PASS
     SOME POSSIBLE REASONS MAY LEAD TO THE FAILURE:
       1. CONSTRAINTS WHICH PREVENT RIGID-BODY MOTION.

*** USER INFORMATION MESSAGE 7570 (GPWG1D)
     RESULTS OF RIGID BODY CHECKS OF MATRIX KAA1     (A-SET)  FOLLOW:
     PRINT RESULTS IN ALL SIX DIRECTIONS AGAINST THE LIMIT OF   9.176609E-01
           DIRECTION        STRAIN ENERGY        PASS/FAIL
           ---------        -------------        ---------
            1               1.497954E-06          PASS
            2               8.091323E-07          PASS
            3               3.934985E-06          PASS
            4               5.049321E-03          PASS
            5               1.058481E-03          PASS
            6               4.531330E-04          PASS
     IF THE MODEL HAS PASSED THE PREVIOUS CHECKS FOR THE G-SET AND N-SET,
     THEN SOME POSSIBLE CAUSES ARE:
       1. THE MODEL IS NOT INTENDED TO BE FREE-FREE WHICH INDICATES THAT THE MODEL IS
          PROPERLY CONSTRAINED TO GROUND;
       2. THE REFERENCE GRID POINT (GRID=GID ON THE GROUNDCHECK COMMAND) IS LOCATED
          TOO FAR FROM THE MODEL'S CENTER OF GRAVITY. IT IS RECOMMENDED THAT THE
          REFERENCE GRID POINT BE LOCATED AS CLOSE AS POSSIBLE TO THE MODEL'S CENTER
          OF GRAVITY OF THE MODEL (SEE THE GRID POINT WEIGHT GENERATOR OUTPUT);
       3. PARAM,AUTOSPC,YES CONSTRAINS NEAR-SINGULAR DEGREES-OF-FREEDOM. WHEN A
          FINITE ELEMENT MODEL WITH AUTOSPC FAILS THE A-SET CHECK, IT IS NOT EVIDENT
          THAT GROUNDING HAS OCCURRED. THE USE OF PARAM,SNORM WILL NOT ELIMINATE THE
          SPURIOUS FAILURE.
```

A modal analysis was performed using NASTRAN to determine the modal frequencies and confirm that the model has appropriate rigid-body modes. A list of the rigid-body modes and elastic modes are provided below.

MODE CHECKS OF FULL PAYLOAD WITH IPA

R E A L E I G E N V A L U E S

MODE NO.	EXTRACTION ORDER	EIGENVALUE	RADIANS	CYCLES	GENERALIZED MASS	GENERALIZED STIFFNESS
1	1	-1.303845E-08	1.141860E-04	1.817327E-05	1.000000E+00	-1.303845E-08
2	2	1.565184E-07	3.956241E-04	6.296552E-05	1.000000E+00	1.565184E-07
3	3	2.830780E-07	5.320507E-04	8.467850E-05	1.000000E+00	2.830780E-07
4	4	2.986428E-07	5.464822E-04	8.697534E-05	1.000000E+00	2.986428E-07
5	5	1.328547E-06	1.152626E-03	1.834462E-04	1.000000E+00	1.328547E-06

6	6	1.799306E-06	1.341382E-03	2.134876E-04	1.000000E+00	1.799306E-06
7	7	6.896857E+02	2.626187E+01	4.179706E+00	1.000000E+00	6.896857E+02
8	8	1.028374E+03	3.206826E+01	5.103823E+00	1.000000E+00	1.028374E+03
9	9	1.034329E+03	3.216099E+01	5.118580E+00	1.000000E+00	1.034329E+03
10	10	1.119180E+03	3.345415E+01	5.324393E+00	1.000000E+00	1.119180E+03
11	11	1.345198E+03	3.667694E+01	5.837316E+00	1.000000E+00	1.345198E+03
12	12	2.361281E+03	4.859302E+01	7.733819E+00	1.000000E+00	2.361281E+03
13	13	2.984051E+03	5.462647E+01	8.694073E+00	1.000000E+00	2.984051E+03
14	14	4.413009E+03	6.643048E+01	1.057274E+01	1.000000E+00	4.413009E+03
15	15	4.741276E+03	6.885693E+01	1.095892E+01	1.000000E+00	4.741276E+03
16	16	5.016697E+03	7.082864E+01	1.127273E+01	1.000000E+00	5.016697E+03

The weight of the integrated system math model is 15119 pounds. This is a conservative (slightly greater than the budget) weight for analysis purposes and can not be verified at the present time because assembly of the payload flight article is not complete. The mass properties for the integrated math model are shown below as computed by FEMAP.

```
Check Mass Properties
199297 Element(s) Selected...

Mass                          Center of Gravity in CSys 0
Structural    =     34.68213  X=    -0.419056  Y=     3.247873  Z=     385.9702
NonStructural=      4.486457  X=   -0.0154423  Y=     0.999418  Z=     388.9703
Total Mass    =     39.16859  X=    -0.372826  Y=      2.99033  Z=     386.3138

Inertias about CSys 0                    Inertias about C.G. in CSys 0
Ixx =     5950395.  Ixy=    -839.0898    Ixx =     104588.4  Ixy=    -795.4218
Iyy =     5915952.  Iyz=     45912.61    Iyy =     70490.66  Iyz=     664.8342
Izz =      92053.9  Izx=     -5548.09    Izz =     91698.21  Izx=     93.27029
```

Material and Temperature

The cover panel and the base panels are made from 7075-T73 sheet and all the C-channel and stiffeners are made from 7075-T7351 plate. The temperature extremes for the Interface Panel A are -180°F to 220°F.

Analysis

The critical stresses for the Interface Panel A are compared to the ultimate and yield strength of 7075-T73 Aluminum Alloy. Analysis to the fasteners used to assemble the IPA was also performed. All margins of safety are positive.

CHECK OF INTERFACE PANEL A

Material Properties : 7075-T73 AL ALY *(Ref. MMPDS-01, Table 3.7.6.0(b_3))*

$F_{tu} := 67000 \cdot psi$

$F_{ty} := 56000 \cdot psi$

$F_{su} := 38000 \cdot psi$

Factors of Safety, $FS_u := 2.0$ $FS_y := 1.25$

Temperature reduction factors,

+ At 220ºF: (For Interface Panel A, the temperature extremes are -180ºF to 220ºF; These temperature reduction factors are conservative for liftoff/landing conditions)

- Ultimate: $\beta_{u1} := 0.88$ *(Ref. MMPDS-01, Figure 3.7.6.1.1(c))*

- Yield: $\beta_{y1} := 0.90$ *(Ref. MMPDS-01, Figure 3.7.6.1.1(d))*

Allowable stresses:

$F_{tu1.a} := \beta_{u1} \cdot F_{tu}$

$F_{tu1.a} = 58960\ psi$

$F_{ty1.a} := \beta_{y1} \cdot F_{ty}$

$F_{ty1.a} = 50400\ psi$

$F_{su1.a} := \beta_{u1} \cdot F_{su}$

$F_{su1.a} = 33440\ psi$

Prepared By	Name	Date		File Name
	J.R. Thorington	11/21/07		PanelA.mcd
Checked By	C. Bala		**Engineering and Science Contract Group** *Structural Analysis Section*	Drawing No. SEG39137684
Title	**AMS-02 Interface Panel A**			

NASPOST V.2.2 is used to sort out the maximum stresses within the load cases. For the Launch and Landing Cases, the elements at the bolt holes were removed from the NASPOST sort (see table below). These elements resulted with localized stresses and therefore the stresses were not real.

Elements Removed From NASPOST sort					
1000147 THRU 1000148	1004163	1008184	1022207	1063093 THRU 1063094	1095385
1000157 THRU 1000159	1004167	1008189	1022211	1063110 THRU 1063111	1095544 THRU 1095545
1000283 THRU 1000286	1004169 THRU 1004170	1008255	1022380 THRU 1022381	1063738 THRU 1063739	1095548 THRU 1095549
1000355 THRU 1000356	1005046	1008257	1022384 THRU 1022385	1063741 THRU 1063742	1095722 THRU 1095723
1000412	1005210	1008262 THRU 1008263	1022571 THRU 1022572	1064905 THRU 1064908	1095726 THRU 1095727
1000415	1005215	1008346 THRU 1008347	1022577 THRU 1022578	1065779	1095891 THRU 1095892
1000523 THRU 1000525	1005225	1008350 THRU 1008351	1030032 THRU 1030033	1065802	1095910
1000527	1005230	1008427 THRU 1008428	1030036 THRU 1030037	1065816	1095912
1000680 THRU 1000681	1005262	1008431 THRU 1008432	1030180	1065818	1096049
1000780 THRU 1000781	1005361 THRU 1005363	1008461 THRU 1008462	1030184	1066633	1096053
1000858 THRU 1000861	1005462 THRU 1005463	1008465 THRU 1008466	1030209	1066657	1096071
1001098 THRU 1001099	1005483	1008572 THRU 1008573	1030212	1066674 THRU 1066675	1096074
1001102 THRU 1001103	1005487	1008632 THRU 1008633	1030391 THRU 1030392	1070477	1096242
1001169	1005492 THRU 1005495	1008657	1030395 THRU 1030396	1070479	1096249 THRU 1096250
1001171	1005504	1008660 THRU 1008661	1030554 THRU 1030555	1070975 THRU 1070977	1096253
1001181 THRU 1001182	1005508	1008664 THRU 1008665	1030558 THRU 1030559	1071272	1096416 THRU 1096417
1001295 THRU 1001296	1005517 THRU 1005518	1008667	1030594 THRU 1030595	1071276	1096433
1001303	1005528	1008747	1030598 THRU 1030599	1071278	1096435
1001305	1005531	1008750 THRU 1008752	1030774	1071284	1096700
1001373 THRU 1001374	1005571 THRU 1005572	1009159	1030777	1072316 THRU 1072317	1096702
1001391	1005580 THRU 1005581	1009163	1030801	1072332	1096723 THRU 1096724
1001393	1005634 THRU 1005635	1009174	1030805	1072334	1096882 THRU 1096883
1001474 THRU 1001477	1005651	1009177	1030974 THRU 1030975	1073364	1096886 THRU 1096887
1001566 THRU 1001567	1005653	1009283 THRU 1009284	1030978 THRU 1030979	1073366	1097059
1001609	1005678 THRU 1005679	1009287 THRU 1009288	1031165 THRU 1031166	1073546 THRU 1073548	1097066 THRU 1097067
1001611	1005870	1009320 THRU 1009321	1031171 THRU 1031172	1073763	1097070
1001683 THRU 1001684	1005873	1009328	1040136 THRU 1040137	1073786	1097225
1001688	1006011	1009337	1040152 THRU 1040153	1074610	1097227
1001690	1006021	1009435	1040315	1074633	1097248 THRU 1097249
1001755 THRU 1001756	1006101 THRU 1006102	1009437	1040318	1074889	1097394
1001809	1006229	1009440 THRU 1009441	1040327 THRU 1040328	1074895	1097398
1001811	1006232 THRU 1006233	1009560 THRU 1009561	1040517 THRU 1040520	1074902	1097409
1001889 THRU 1001890	1006540	1009728	1040655 THRU 1040658	1074917	1097412
1001897	1006543	1009732	1040830	1076970	1097588 THRU 1097589
1001899	1006545 THRU 1006546	1009810	1040835	1076972 THRU 1076974	1097592 THRU 1097593
1001927 THRU 1001928	1006586 THRU 1006587	1009813 THRU 1009814	1040854	1083012 THRU 1083013	1097731
1001931 THRU 1001932	1006694	1009817	1040856	1083028 THRU 1083029	1097752
1002035 THRU 1002036	1006696	1009840	1041149	1083168 THRU 1083169	1097773 THRU 1097774
1002038 THRU 1002039	1006725	1009842	1041152 THRU 1041154	1083172 THRU 1083173	1097919
1002057 THRU 1002060	1006729	1009880 THRU 1009881	1041310	1083318 THRU 1083319	1097923
1002238	1006842	1009915 THRU 1009916	1041312	1083322 THRU 1083323	1097934
1002251	1006846	1009935 THRU 1009936	1041329	1083468 THRU 1083469	1097937
1002254	1006937 THRU 1006938	1010038	1041331	1083472 THRU 1083473	1098098
1002258	1007098 THRU 1007101	1010047	1041463 THRU 1041464	1083773 THRU 1083774	1098108
1002314 THRU 1002315	1007197 THRU 1007198	1010131	1041467 THRU 1041468	1083789 THRU 1083790	1098110
1002322 THRU 1002323	1007243	1010135	1041649 THRU 1041650	1083929 THRU 1083930	1098116
1002450 THRU 1002451	1007245	1010272	1041653 THRU 1041654	1083933 THRU 1083934	1102009
1002613 THRU 1002614	1007502 THRU 1007503	1010274	1041863 THRU 1041866	1084079 THRU 1084080	1102013
1002618	1007506 THRU 1007507	1010327	1050084	1084083 THRU 1084084	1102025
1002621	1007526	1010330	1050086	1084229 THRU 1084230	1102029
1002700 THRU 1002703	1007533	1010397	1050095	1084233 THRU 1084234	1102401
1002804	1007595 THRU 1007596	1010408	1050114 THRU 1050115	1090037 THRU 1090040	1102405
1002871	1007598 THRU 1007599	1010512	1050121	1091318	1102425
1003081 THRU 1003083	1007664 THRU 1007665	1010514	1050130 THRU 1050131	1091322	1102429
1003085	1007673 THRU 1007674	1010519 THRU 1010520	1050163 THRU 1050164	1091324 THRU 1091325	1102856 THRU 1102857
1003283	1007745 THRU 1007746	1020032 THRU 1020033	1050211 THRU 1050214	1092221 THRU 1092222	1102862
1003285	1007748 THRU 1007749	1020036 THRU 1020037	1050245 THRU 1050246	1092224 THRU 1092225	1102864
1003320	1007819 THRU 1007820	1020180	1050288	1093092 THRU 1093093	1103258
1003324	1007822 THRU 1007823	1020184	1050298	1093096 THRU 1093097	1103262
1003361 THRU 1003362	1007923	1020209	1050301	1094364 THRU 1094365	1103307
1003365 THRU 1003366	1007937	1020212	1050308	1094368 THRU 1094369	1103309
1003626	1007952	1020391 THRU 1020392	1060627 THRU 1060628	1095022 THRU 1095023	1103776
1003630	1007954	1020395 THRU 1020396	1060632 THRU 1060633	1095027	1103778
1003635	1007958	1020554 THRU 1020555	1061020 THRU 1061021	1095029	1103784
1003637	1007966	1020558 THRU 1020559	1061027 THRU 1061029	1095192	1103808
1003717	1008099 THRU 1008100	1022000 THRU 1022001	1061725	1095199 THRU 1095200	
1003721	1008144	1022004 THRU 1022005	1061744	1095203	
1003723 THRU 1003724	1008146	1022180	1061760	1095366 THRU 1095367	
1004013 THRU 1004016	1008181 THRU 1008182	1022183	1061762	1095383	

Liftoff Loads

The Interface Panel A model was integrated with the AMS-02 payload loads model. For the following analysis, the maximum Von-Mises, principal, and shear stresses of plate elements are selected from 64 liftoff load cases (Load Case 1001 - 1064). NASPOST V.2.2 is used to sort out the maximum stresses within the load cases. Note that the elements at the bolt holes were removed from the NASPOST sort.

$u_{uu.max} := 19316.1 \cdot psi$ *LC# 1032, ELEM# 1005557* *(Maximum Principal Stress)*

(See Appendix A25, p.A25-8)

$u_{uy.max} := 18677.6 \cdot psi$ *LC# 1032, ELEM# 1005553* *(Maximum Von-Mises Stress)*

(See Appendix A25, p.A25-9)

$u_{us.max} := 9658.1 \cdot psi$ *LC# 1032; ELEM# 1005557* *(Maximum Shear Stress)*

(see Appendix A25, p.A25-10)

Margins of Safety,

$$MS_{u1} := \frac{F_{tu1.a}}{FS_u \cdot u_{uu.max}} - 1 \qquad MS_{u1} = 0.526$$

$$MS_{y1} := \frac{F_{ty1.a}}{FS_y \cdot u_{uy.max}} - 1 \qquad MS_{y1} = 1.16$$

$$MS_{s1} := \frac{F_{su1.a}}{FS_u \cdot u_{us.max}} - 1 \qquad MS_{s1} = 0.73$$

Landing Loads

The Interface Panel A model was integrated with the AMS-02 payload loads model. For the following analysis, the maximum Von-Mises, principal, and shear stresses of plate elements are selected from 64 landing load cases (Load Case 2001 - 2064). NASPOST V.2.2 is used to sort out the maximum stresses within the load cases. Note that the elements at the bolt holes were removed from the NASPOST sort.

$u_{uu1.max} := 24795.1 \cdot psi$ *LC# 2032, ELEM# 1005557* *(Maximum Principal Stress)*

(See Appendix A25, p.A25-26)

$u_{uy1.max} := 23655.5 \cdot psi$ *LC# 2032, ELEM# 1005553* *(Maximum Von-Mises Stress)*

(See Appendix A25, p.A25-27)

$u_{us1.max} := 12397.6 \cdot psi$ *LC# 2032; ELEM# 1005557* *(Maximum Shear Stress)*

(see Appendix A25, p.A25-28)

Margins of Safety,

$$MS_{u1} := \frac{F_{tu1.a}}{FS_u \cdot u_{uu1.max}} - 1 \qquad MS_{u1} = 0.189$$

$$MS_{y1} := \frac{F_{ty1.a}}{FS_y \cdot u_{uy1.max}} - 1 \qquad MS_{y1} = 0.7$$

$$MS_{s1} := \frac{F_{su1.a}}{FS_u \cdot u_{us1.max}} - 1 \qquad MS_{s1} = 0.35$$

Applying 125 lb Kickload

Maximum Von-Mises, principal, and shear stresses of plate elements are selected from the 125 lb kickload cases. The kickload was applied at 3 different locations on the Interface Panel A. NASPOST V.2.2 is used to sort out the maximum stresses within the load cases. For the Kickload Case, elements 60633, 63739, 61028, 64906, 61027, 73547, and 50298 were removed from the NASPOST sort. These elements resulted with localized stresses and therefore the stresses were not real.

Load Case	Node Where Load is Applied	Fx	Fy	Fz
25	1065	-25	0	0
	1067	-25	0	0
	1168	-25	0	0
	1170	-25	0	0
	1167	-25	0	0
26	3015	-25	0	0
	3287	-25	0	0
	3294	-25	0	0
	3017	-25	0	0
	3285	-25	0	0
27	64966	-25	0	0
	65519	-25	0	0
	64111	-25	0	0
	64955	-25	0	0
	65517	-25	0	0

$u_{uu1.max} := 25945.9 \cdot psi$ *LC# 25, ELEM# 50163* *(Maximum Principal Stress)*

(See Appendix A25, p.A25-38)

$u_{uy1.max} := 24375.0 \cdot psi$ *LC# 25, ELEM# 50163* *(Maximum Von-Mises Stress)*

(See Appendix A25, p.A25-39)

$u_{us1.max} := 12973.0 \cdot psi$ *LC# 25; ELEM# 50163* *(Maximum Shear Stress)*

(see Appendix A25, p.A25-40)

Margins of Safety,

$$MS_{u1} := \frac{F_{tu1.a}}{FS_u \cdot u_{uu1.max}} - 1 \qquad MS_{u1} = 0.136$$

$$MS_{y1} := \frac{F_{ty1.a}}{FS_y \cdot u_{uy1.max}} - 1 \qquad MS_{y1} = 0.65$$

$$MS_{s1} := \frac{F_{su1.a}}{FS_u \cdot u_{us1.max}} - 1 \qquad MS_{s1} = 0.29$$

Prepared By	Name	Date		File Name
	J.R.Thorington	12/06/07		InterfacepanelBolt1
Checked By	C. Bala		**Engineering and Science Contract Group** *Structural Analysis Section*	Draw ing No. SEG39137684
Title	Bolt Analysis for Front or Base Panel to C-channel			

Bolt Analysis

Base Panel (SDG39137685-001) to C-Channel Assemblies (SEG39137686-701, -702, -703, -704) Bolts

Bolts NAS1133E4, 0.190-32UNJF, 0.526L, Washer NAS1149E0332R, Nut Plate MS21076L3E

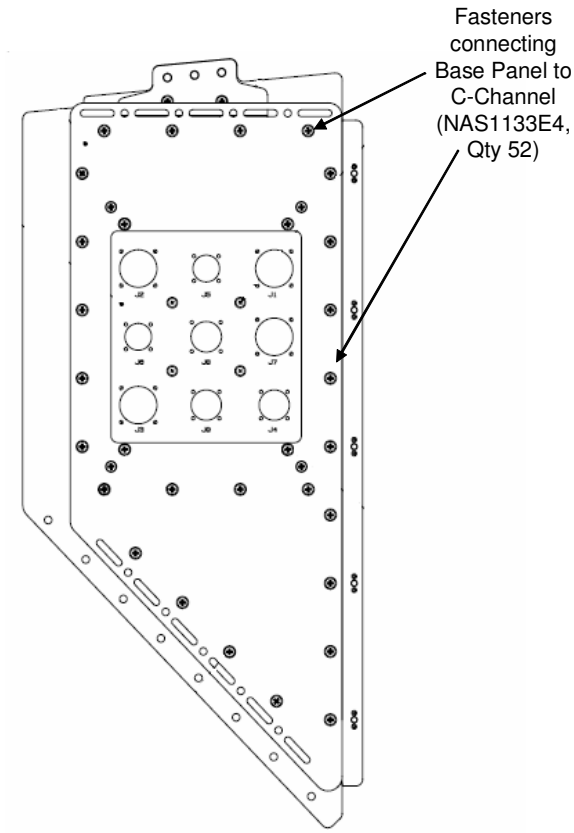

Loads : Bolt forces were sorted by maximum absolute value on all three axes. The tensile load and shear load were calculated for the worse case. All bolt forces reference the Global Coordinate System.

Read in the external datum from NASPOST results:

$loads := READPRN("1\text{-}52.txt")$

$i := 1..rows(loads)$ $\quad rows(loads) = 6812$ $\quad j := 2..cols(loads)$ $\quad cols(loads) = 8$

$ID := loads^{\langle 1 \rangle}$ $\quad Fx := loads^{\langle 3 \rangle} \cdot lbf$ $\quad Fz := loads^{\langle 5 \rangle} \cdot lbf$ $\quad My := loads^{\langle 7 \rangle} \cdot in \cdot lbf$

$LC := loads^{\langle 2 \rangle}$ $\quad Fy := loads^{\langle 4 \rangle} \cdot lbf$ $\quad Mx := loads^{\langle 6 \rangle} \cdot in \cdot lbf$ $\quad Mz := loads^{\langle 8 \rangle} \cdot in \cdot lbf$

* Note that "1-52.txt" is generated from NASPOST result (.LIS file) by just removing all words and comments.

$Ft_i := |Fx_i|$ $\quad max(Ft) = 65.12\,lbf$ $\quad$ Tensile Load

$Fv_i := \sqrt{(Fy_i)^2 + (Fz_i)^2}$ $\quad max(Fv) = 318.21\,lbf$ $\quad$ Shear Load

Prepared By	Name	Date		File Name
	J.R.Thorington	12/06/07	**Engineering and Science Contract Group**	InterfacepanelBolt1
Checked By	C. Bala		*Structural Analysis Section*	Draw ing No. SEG39137684
Title	Bolt Analysis for Front or Base Panel to C-channel			

Base Panel (SDG39137685-001) to C-Channel Assemblies (SEG39137686-701, -702, -703, -704) Bolts

Bolts NAS1133E4, 0.190-32UNJF, 0.526L, Washer NAS1149E0332R, Nut Plate MS21076L3E

Flange 1 Front Panel/Base Panel,
Part numbers: SDG39137685
Material: AL ALY 7075-T73

Flange_2 C-channel, Panel A Assembly
Part number: SDG39137686
Material: AL ALY 7075-T7351

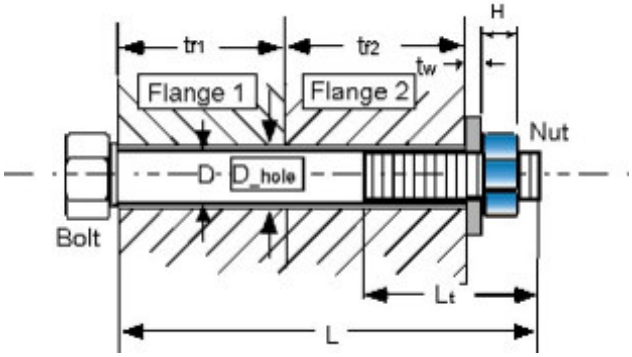

Note: Figure is for reference only.
Not to scale, and actual joint may differ
Washer may be on nut side, head side, or both

Minimum edge distance of flange one: $edge1 := 0.438 \cdot in$

flange two: $edge2 := 0.312 \cdot in$

Loads

Applied tensile load $P := 65.12 lbf$

Applied shear load $V := 318.21 lbf$

Applied bending moment $M := 0 in \cdot lbf$

Factors of Safety

Ultimate $SFu := 2.0$ Yield $SFy := 1.25$ Joint Separation $SFsep := 1.2$

Fitting factor $FF := 1.15$

Temperature data

Assembly $Temp_initial := 70 \cdot deg$

Maximum $Temp_max := 220 \cdot deg$

Minimum $Temp_min := -180 \cdot deg$

note, these are maximum temperatures that hardware sees / if maximum load occurs at a different temperature this will be conservative

Bolt Data

Nominal diameter of bolt $D := .19 \cdot in$

Number of threads/inch $Nt := 32 \cdot \frac{1}{in}$

Shank diameter of bolt $D_shank := .1895 \cdot in$

Note, if there is a retainer groove in the fastener, this should be the calculated diameter to give an equivalent cross sectional area

Total length of bolt $L := .526 \cdot in$

Threaded length $Lt := 0.276 \cdot in$

(If bolt is fully threaded, input Lt = L)

Bolt head dia. across flats $dw := 0.331 \cdot in$ (dia of pressure boss if it exists, otherwise dia of head)

Bolt head height $bh := .133 \cdot in$ (head height is 0 if bolt is flat head)

Thread data lookup table is hidden

Fri Apr 27 14:15:35 2007

This file uses the data shown in \\escfil02\2i11_mathcad\8307_bolts\Rev_D\thread_data.mcd

Temperature correction factor for bolt strength ultimate. $TSu_bolt := 0.96$ Yield $TSy_bolt := 0.96$

Bolt ultimate tensile allowable stress ultimate: $Ftu_bolt := 160000 \cdot psi$ Yield $Fty_bolt := 120000 \cdot psi$

Bolt ultimate shear allowable stress $Fsu_bolt := 0.6 \cdot Ftu_bolt$

Temperature correction factor for bolt modulus $TE_bolt := 0.96$

Modulus of elasticity of bolt $E_bolt := \left(29.1 \cdot 10^{6} \cdot psi\right)$

Thermal coefficients for bolt $\beta_bolt_hot := 9.2 \cdot 10^{-6} \cdot \frac{\frac{in}{in}}{deg}$ $\beta_bolt_cold := 8.0 \cdot 10^{-6} \cdot \frac{\frac{in}{in}}{deg}$

Washer Data

Thickness of washers: head $twh := 0.032 \cdot in$

nut $twn := 0.0 \cdot in$

these are total washer thickness, if there are more than one

Diameter of washer under head, Outer: $Dwoh := 0.438in$ Inner: $Dwih := 0.203 \cdot in$

Diameter of washer under nut, Outer: $Dwon := 0.0in$ Inner: $Dwin := 0.0 \cdot in$

Note: If there are no washer tw's, Dw's and Dwi's should be zero

Modulus of elasticity, head: $E_washerh := \left(29.1 \cdot 10^{6} \cdot psi\right)$

nut: $E_washern := (0 \cdot psi)$

Temperature correction factor for modulus, head: $TE_washerh := 0.96$

nut: $TE_washern := 0.96$

Nut Data

Height of nut $H := 0.250 \cdot in$

Nut dia. across flats $Dn := 0.290 \cdot in$

Temperature correction factor for nut strength $TS_nut := 0.96$

Prepared By	Name	Date	Engineering and Science Contract Group	File Name
	J.R.Thorington	12/06/07		InterfacepanelBolt1
Checked By	C. Bala		*Structural Analysis Section*	Draw ing No. SEG39137684
Title	Bolt Analysis for Front or Base Panel to C-channel			

Ultimate allowable stress, tensile: $Ftu_nut := 125000 \cdot psi$ Shear: $Fsu_nut := 0.6 \cdot Ftu_nut$

Ultimate axial strength of nut $Ptu_nut := 2460 \cdot lbf$ *(Reference MS21076)*

Flange data

Stiffness of the joint depends upon number of members in the grip of the fasteners & their material properties,

Thickness of flange 1: $tf1 := .125 \cdot in$ flange 2: $tf2 := .120in$ Diameter of thru hole $D_hole := 0.213 \cdot in$

Modulus of elasticity of these members, with temperature correction factors

Compressive Modulus of elasticity for the parts in the joint $E_flange1 := \left(10.3 \times 10^{6} \cdot psi\right)$ $E_flange2 := \left(10.3 \cdot 10^{6} \cdot psi\right)$

Temperature correction factor (modulus) for flange 1: $Tf1E := 0.95$ flange 2: $Tf2E := 0.95$

Coefficient of thermal expansion for flanges

$\beta_flange1_hot := 12.75 \cdot 10^{-6} \cdot \frac{\frac{in}{in}}{deg}$ $\beta_flange2_hot := 12.75 \cdot 10^{-6} \cdot \frac{\frac{in}{in}}{deg}$

$\beta_flange1_cold := 12.1 \cdot 10^{-6} \cdot \frac{\frac{in}{in}}{deg}$ $\beta_flange2_cold := 12.1 \cdot 10^{-6} \cdot \frac{\frac{in}{in}}{deg}$

Torque/Preload data

Maximum torque $Tmax := 35 \cdot in \cdot lbf$

Minimum torque $Tmin := 30in \cdot lbf$

(Dwg. SEG39137684)

Joint is lubed/dry

Preload Uncertainty $u := 0.25$

Torque coefficient $k := 0.15$

Loading plane factor $n := 0.5$

Stiffness and Margin calculations are hidden

Fri Apr 27 14:15:49 2007

This file uses the calculations shown in \\escfil02\2i11_mathcad\8307_bolts\Rev_D\bolt_stiffness_nut.mcd

Bolt Load data

Bolt/joint stiffness factor $= 0.35$

Max. preload $PLDmax = 1659\,lbf$

Min. preload $PLDmin = 474\,lbf$

Nom. preload $PLDnom = 1228\,lbf$

Preload due to temperature $Pthr_pos = 123.9\,lbf$

$Pthr_neg = -238.4\,lbf$

Uncertainty factor $u = 0.25$

Prepared By	Name	Date	Engineering and Science Contract Group	File Name
	J.R.Thorington	12/06/07		InterfacepanelBolt1
Checked By	C. Bala		*Structural Analysis Section*	Draw ing No. SEG39137684
Title	Bolt Analysis for Front or Base Panel to C-channel			

Torque coefficient $k = 0.15$

Loading plane factor $n = 0.5$

Preload to yield ratio(nom.) $PLDratio = 0.554$

Joint separation load $Psep = 78.144\ lbf$

Bolt Load data (cont.)

Applied Tensile load on the bolt $P = 65.12\ lbf$

Applied shear on the bolt $V = 318.21\ lbf$

Applied bending on the bolt $M = 0\ in \cdot lbf$

Max. load on the bolt with preload and Factor of safety

(ultimate) $Pb = 1685\ lbf$

(yield) $Pby = 1675\ lbf$

Max. load on the bolt with preload without factor of safety $Pbapp = 1672\ lbf$

Bolt ultimate tensile strength $PAt = 2957\ lbf$

Thread pullout strength $PAs = 2362\ lbf$

Nut ultimate tensile strength $Ptu_nut = 2362\ lbf$

Bolt shear strength $VAu = 2599\ lbf$

Bolt bending strength $MAu = 61\ in \cdot lbf$

General Checks

length_check = "Bolt length should be increased! nut is fully threaded, but does not extend past nut"

cone_check = "Joint pressure cone does not extend pass flange edge"

preload_check = "NOTE: Nominal preload < 65% of bolt yield strength"

washer_check = "Washers under head and nut do not extend past flanges"

Summary of Margins for bolt:

Joint separation	$MS_1 = 5.4$	Direct Thread shear Ultimate	$MS_6 = 14.77$
Direct Tension Ultimate	$MS_2 = 18.74$	Total Thread shear Ultimate	$MS_7 = 0.4$
Direct Tension Yield	$MS_3 = 22.69$	Shear Ultimate	$MS_8 = 2.55$
Total Tension Ultimate	$MS_4 = 0.75$	Bending Ultimate	$MS_9 = 100$
Total Tension Yield	$MS_5 = 0.32$	Combined shear, tension and bending ultimate	$MS_{10} = 0.66$

Smallest margin of safety for the bolt, and the failure mode:

MSbolt = 0.32 Failure_Mode = "Total Tension Yield"

Prepared By	Name	Date	Engineering and Science Contract Group	File Name
	J.R.Thorington	12/06/07		InterfacepanelBolt1
Checked By	C. Bala		*Structural Analysis Section*	Draw ing No. SEG39137684
Title	Bolt Analysis for Front or Base Panel to C-channel			

Fail-safe Analysis (Conservatively, the loads were doubled to perform fail-safe analysis)

Fail-safe Loads

Applied tensile load $P_FS := 130.24 \cdot lbf$

Applied shear load $V_FS := 636.42 \cdot lbf$

Applied bending moment $M_FS := 0 \cdot in \cdot lbf$

Fail-safe Factors of Safety

Ultimate $SFu_FS := 1.0$

Joint Separation $SFsep_FS := 1.0$

Fail Safe Margin calculations are hidden / stiffness & allowable data is not recalculated

Fri Apr 27 14:16:05 2007

This file uses the calculations shown in \\escfil02\2i11_mathcad\8307_bolts\Rev_D\bolt_stiffness_nut_FS.mcd

Bolt Fail-safe Load data

Joint separation load $Psep_FS = 130.24\,lbf$

Max. load on the bolt(ultimate) $Pb_FS = 1685.2\,lbf$

Summary of fail-safe Margins for bolt:

Joint separation $MS_FS_1 = 2.84$

Direct Tension Ultimate $MS_FS_2 = 18.74$

Total Tension Ultimate $MS_FS_3 = 0.75$

Direct Thread shear Ultimate $MS_FS_4 = 14.77$

Total Thread shear Ultimate $MS_FS_5 = 0.4$

Shear Ultimate $MS_FS_6 = 2.55$

Bending Ultimate $MS_FS_7 = 10$

Combined shear, tension and bending ultimate $MS_FS_8 = 0.66$

Determination of the smallest fail-safe margin of safety for the bolt, and the failure mode:

$MSbolt_FS = 0.4$ $Failure_Mode_FS = \text{"Total Thread Shear Ultimate (Nut)"}$

Prepared By	Name	Date		File Name
	J.R. Thorington	12/06/07		InterfacepanelBolt2
Checked By	C. Bala		**Engineering and Science Contract Group** *Structural Analysis Section*	Draw ing No. SEG39137684
Title	Bolt Analysis for Base Panel to Rear Sub-Panel			

Base Panel (SDG39137685-001) to Rear Sub Panel Assembly(SDG39137809-702) Bolts

Bolts FIT7654-3-10-6, 0.190-32UNJF, A-286, 0.625L, Washer NAS1149E0332R, Nut Plate MS21076L3E

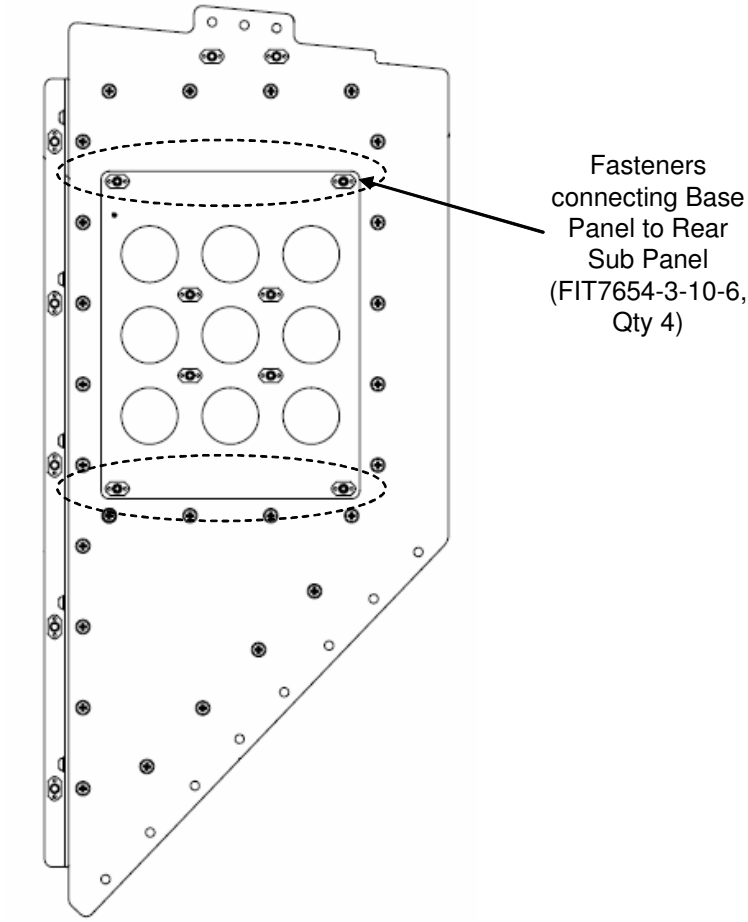

Loads : Bolt forces were sorted by maximum absolute value on all three axes. The tensile load and shear load were calculated for the worse case. All bolt forces reference the Global Coordinate System.

Read in the external datum from NASPOST results:

$loads := READPRN("68\text{-}71.txt")$

$i := 1..rows(loads)$ $\quad rows(loads) = 524$ $\quad j := 2..cols(loads)$ $\quad cols(loads) = 8$

$ID := loads^{\langle 1 \rangle}$ $\quad Fx := loads^{\langle 3 \rangle} \cdot lbf$ $\quad Fz := loads^{\langle 5 \rangle} \cdot lbf$ $\quad My := loads^{\langle 7 \rangle} \cdot in \cdot lbf$

$LC := loads^{\langle 2 \rangle}$ $\quad Fy := loads^{\langle 4 \rangle} \cdot lbf$ $\quad Mx := loads^{\langle 6 \rangle} \cdot in \cdot lbf$ $\quad Mz := loads^{\langle 8 \rangle} \cdot in \cdot lbf$

* Note that "68-71.txt" is generated from NASPOST result (.LIS file) by just removing all words and comments.

$Ft_i := |Fx_i|$ $\quad max(Ft) = 9.47\,lbf$ $\quad$ Tensile Load

$Fv_i := \sqrt{(Fy_i)^2 + (Fz_i)^2}$ $\quad max(Fv) = 320.26\,lbf$ $\quad$ Shear Load

Prepared By	Name	Date		File Name
	J.R. Thorington	12/06/07	**Engineering and Science Contract Group**	InterfacepanelBolt2
Checked By	C. Bala		*Structural Analysis Section*	Draw ing No. SEG39137684
Title	Bolt Analysis for Base Panel to Rear Sub-Panel			

Base Panel (SDG39137685-001) to Rear Sub Panel Assembly(SDG39137809-702) Bolts

Bolts FIT7654-3-10-6, 0.190-32UNJF, A-286, 0.625L, Washer NAS1149E0332R, Nut Plate MS21076L3E

Flange: Base Panel,
Part numbers: SDG39137685-001
Material: AL ALY 7075-T73

Flange_2 Rear SubPanel
Part number: SDG39137809-702
Material: AL ALY 7075-T7351

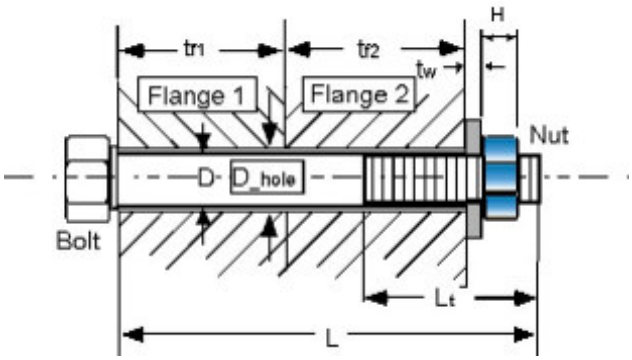

Note: Figure is for reference only.
Not to scale, and actual joint may differ
Washer is on head side only.

Minimum edge distance of flange one: $edge1 := 0.438 \cdot in$

flange two: $edge2 := 0.312 \cdot in$

Loads

Applied tensile load $P := 9.47 lbf$

Applied shear load $V := 320.26 lbf$

Applied bending moment $M := 0 in \cdot lbf$

Factors of Safety

Ultimate $SFu := 2.0$ Yield $SFy := 1.25$ Joint Separation $SFsep := 1.2$

Fitting factor $FF := 1.15$

Temperature data

Assembly $Temp_initial := 70 \cdot deg$

Maximum $Temp_max := 220 \cdot deg$

Minimum $Temp_min := -180 \cdot deg$

note, these are maximum temperatures that hardware sees / if maximum load occurs at a different temperature this will be conservative

Bolt Data

Nominal diameter of bolt $D := .19 \cdot in$

Number of threads/inch $Nt := 32 \cdot \frac{1}{in}$

Shank diameter of bolt $D_shank := .139 \cdot in$

Note, if there is a retainer groove in the fastener, this should be the calculated diameter to give an equivalent cross sectional area

Total length of bolt $L := .625 \cdot in$

Threaded length $Lt := 0.438 \cdot in$

(If bolt is fully threaded, input Lt = L)

Bolt head dia. across flats $dw := 0.305 \cdot in$

(dia of pressure boss if it exists, otherwise dia of head)

Bolt head height $bh := .185 \cdot in$

Thread data lookup table is hidden

Fri Apr 27 14:15:35 2007

This file uses the data shown in \\escfil02\2i11_mathcad\8307_bolts\Rev_D\thread_data.mcd

Temperature correction factor for bolt strength ultimate. $TSu_bolt := 0.96$ Yield $TSy_bolt := 0.96$

Bolt ultimate tensile allowable stress ultimate: $Ftu_bolt := 160000 \cdot psi$ Yield $Fty_bolt := 120000 \cdot psi$

Bolt ultimate shear allowable stress $Fsu_bolt := 0.6 \cdot Ftu_bolt$

Temperature correction factor for bolt modulus $TE_bolt := 0.96$

Modulus of elasticity of bolt $E_bolt := \left(29.1 \cdot 10^{6} \cdot psi\right)$

Thermal coefficients for bolt $\beta_bolt_hot := 9.2 \cdot 10^{-6} \cdot \frac{\frac{in}{in}}{deg}$ $\beta_bolt_cold := 8.0 \cdot 10^{-6} \cdot \frac{\frac{in}{in}}{deg}$

Washer Data

Thickness of washers: head $twh := 0.032 \cdot in$

nut $twn := 0.0 \cdot in$

these are total washer thickness, if there are more than one

Diameter of washer under head, Outer: $Dwoh := 0.438in$ Inner: $Dwih := 0.203 \cdot in$

Diameter of washer under nut, Outer: $Dwon := 0.0in$ Inner: $Dwin := 0.0 \cdot in$

Note: If there are no washer tw's, Dw's and Dwi's should be zero

Modulus of elasticity, head: $E_washerh := \left(29.1 \cdot 10^{6} \cdot psi\right)$

nut: $E_washern := (0 \cdot psi)$

Temperature correction factor for modulus, head: $TE_washerh := 0.96$

nut: $TE_washern := 0.96$

Nut Data

Height of nut $H := 0.250 \cdot in$

Nut dia. across flats $Dn := 0.290 \cdot in$

Temperature correction factor for nut strength $TS_nut := 0.96$

Ultimate allowable stress, tensile: $Ftu_nut := 125000 \cdot psi$ Shear: $Fsu_nut := 0.6 \cdot Ftu_nut$

Ultimate axial strength of nut $Ptu_nut := 2460 \cdot lbf$ *(Reference MS21076)*

Flange data

Stiffness of the joint depends upon number of members in the grip of the fasteners & their material properties,

Thickness of flange 1: $tf1 := .125 \cdot in$ flange 2: $tf2 := .125in$ Diameter of thru hole $D_hole := 0.213 \cdot in$

Modulus of elasticity of these members, with temperature correction factors

Compressive Modulus of elasticity for the parts in the joint $E_flange1 := \left(10.3 \times 10^{6} \cdot psi\right)$ $E_flange2 := \left(10.3 \cdot 10^{6} \cdot psi\right)$

Temperature correction factor (modulus) for flange 1: $Tf1E := 0.95$ flange 2: $Tf2E := 0.95$

Coefficient of thermal expansion for flanges

$$\beta_flange1_hot := 12.75 \cdot 10^{-6} \cdot \frac{\frac{in}{in}}{deg} \qquad \beta_flange2_hot := 12.75 \cdot 10^{-6} \cdot \frac{\frac{in}{in}}{deg}$$

$$\beta_flange1_cold := 12.1 \cdot 10^{-6} \cdot \frac{\frac{in}{in}}{deg} \qquad \beta_flange2_cold := 12.1 \cdot 10^{-6} \cdot \frac{\frac{in}{in}}{deg}$$

Torque/Preload data

Maximum torque $Tmax := 35 \cdot in \cdot lbf$

Minimum torque $Tmin := 30in \cdot lbf$

(Dwg. SEG39137684)

Joint is lubed/dry

Preload Uncertainty $u := 0.25$

Torque coefficient $k := 0.15$

Loading plane factor $n := 0.5$

Stiffness and Margin calculations are hidden

Fri Apr 27 14:15:49 2007

This file uses the calculations shown in \\escfil02\2i11_mathcad\8307_bolts\Rev_D\bolt_stiffness_nut.mcd

Bolt Load data

Bolt/joint stiffness factor $= 0.276$

Max. preload $PLDmax = 1625\,lbf$

Min. preload $PLDmin = 539\,lbf$

Nom. preload $PLDnom = 1228\,lbf$

Preload to yield ratio(nom.) $PLDratio = 0.703$

Joint separation load $Psep = 11.364\,lbf$

Preload due to temperature $Pthr_pos = 90.2\,lbf$

$Pthr_neg = -173.7\,lbf$

Uncertainty factor $u = 0.25$

Torque coefficient $k = 0.15$

Loading plane factor $n = 0.5$

Bolt Load data (cont.)

Applied Tensile load on the bolt $P = 9.47\,lbf$

Applied shear on the bolt $V = 320.26\,lbf$

Applied bending on the bolt $M = 0\,in \cdot lbf$

Max. load on the bolt with preload and Factor of safety

(ultimate) $Pb = 1628\,lbf$

(yield) $Pby = 1627\,lbf$

Max. load on the bolt with preload without factor of safety $Pbapp = 1627\,lbf$

Bolt ultimate tensile strength $PAt = 2331\,lbf$

Thread pullout strength $PAs = 2362\,lbf$

Nut ultimate tensile strength $Ptu_nut = 2362\,lbf$

Bolt shear strength $VAu = 1398\,lbf$

Bolt bending strength $MAu = 61\,in \cdot lbf$

General Checks

length_check = "Bolt length is sufficient and nut fully engaged"

cone_check = "Joint pressure cone does not extend pass flange edge"

preload_check = "Nominal preload >= 65% of bolt yield strength"

washer_check = "Washers under head and nut do not extend past flanges"

Summary of Margins for bolt:

Joint separation	$MS_1 = 46.85$	Direct Thread shear Ultimate	$MS_6 = 107.42$
Direct Tension Ultimate	$MS_2 = 106.01$	Total Thread shear Ultimate	$MS_7 = 0.45$
Direct Tension Yield	$MS_3 = 127.41$	Shear Ultimate	$MS_8 = 0.9$
Total Tension Ultimate	$MS_4 = 0.43$	Bending Ultimate	$MS_9 = 100$
Total Tension Yield	$MS_5 = 0.07$	Combined shear, tension and bending ultimate	$MS_{10} = 0.22$

Smallest margin of safety for the bolt, and the failure mode:

MSbolt = 0.07 Failure_Mode = "Total Tension Yield"

Prepared By	Name	Date	Engineering and Science Contract Group	File Name
	J.R. Thorington	12/06/07		InterfacepanelBolt2
Checked By	C. Bala		*Structural Analysis Section*	Draw ing No. SEG39137684
Title	Bolt Analysis for Base Panel to Rear Sub-Panel			

Fail-safe Analysis (Conservatively, the loads were doubled to perform fail-safe analysis)

Fail-safe Loads

Applied tensile load $P_FS := 18.94 \cdot lbf$

Applied shear load $V_FS := 640.52 \cdot lbf$

Applied bending moment $M_FS := 0 \cdot in \cdot lbf$

Fail-safe Factors of Safety

Ultimate $SFu_FS := 1.0$

Joint Separation $SFsep_FS := 1.0$

Fail Safe Margin calculations are hidden / stiffness & allowable data is not recalculated

Fri Apr 27 14:16:05 2007

This file uses the calculations shown in \\escfil02\2i11_mathcad\8307_bolts\Rev_D\bolt_stiffness_nut_FS.mcd

Bolt Fail-safe Load data

Joint separation load $Psep_FS = 18.94\,lbf$

Max. load on the bolt(ultimate) $Pb_FS = 1628.3\,lbf$

Summary of fail-safe Margins for bolt:

Joint separation $MS_FS_1 = 27.71$

Direct Tension Ultimate $MS_FS_2 = 106.01$

Total Tension Ultimate $MS_FS_3 = 0.43$

Direct Thread shear Ultimate $MS_FS_4 = 107.42$

Total Thread shear Ultimate $MS_FS_5 = 0.45$

Shear Ultimate $MS_FS_6 = 0.9$

Bending Ultimate $MS_FS_7 = 10$

Combined shear, tension and bending ultimate $MS_FS_8 = 0.22$

Determination of the smallest fail-safe margin of safety for the bolt, and the failure mode:

$MSbolt_FS = 0.22$

Failure_Mode_FS = "Combined Shear Tension Bending Ultimate"

Prepared By	Name	Date		File Name
	J.R. Thorington	12/06/07		InterfacepanelBolt3
Checked By	C. Bala		**Engineering and Science Contract Group** *Structural Analysis Section*	Draw ing No. SEG39137684
Title	Bolt Analysis Front Panel to Front Sub-Panel			

Front Panel (SDG39137687-001) to Front sub panel assembly (SDG39137809-701) Bolts

Bolts NAS1133E4, washer NAS1149E0332R, Nut plate MS21076L3E

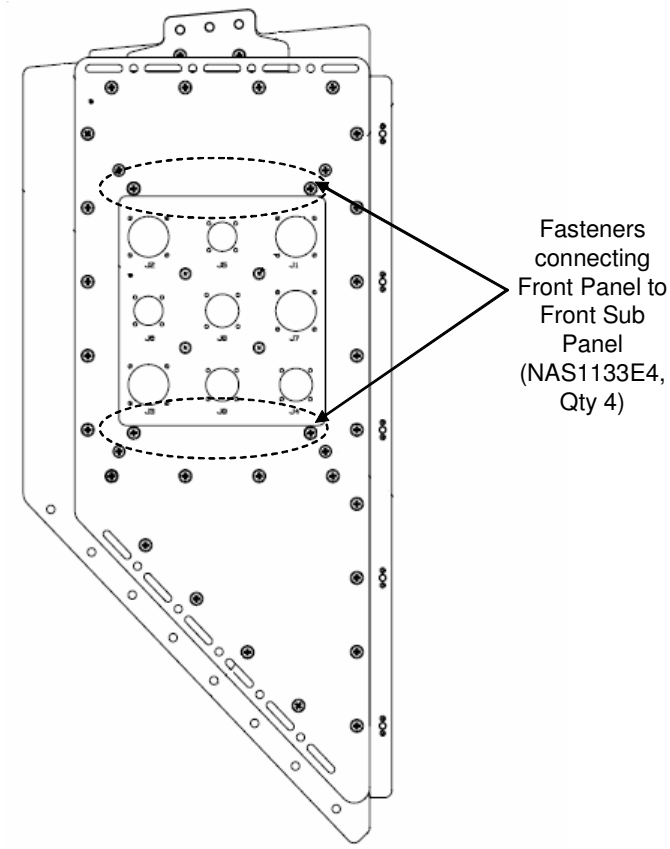

Loads : Bolt forces were sorted by maximum absolute value on all three axes. The tensile load and shear load were calculated for the worse case. All bolt forces reference the Global Coordinate System.

Read in the external datum from NASPOST results:

$loads := READPRN("64\text{-}67.txt")$

$i := 1..rows(loads)$ $\quad rows(loads) = 524$ $\quad j := 2..cols(loads)$ $\quad cols(loads) = 8$

$ID := loads^{\langle 1 \rangle}$ $\quad Fx := loads^{\langle 3 \rangle} \cdot lbf$ $\quad Fz := loads^{\langle 5 \rangle} \cdot lbf$ $\quad My := loads^{\langle 7 \rangle} \cdot in \cdot lbf$

$LC := loads^{\langle 2 \rangle}$ $\quad Fy := loads^{\langle 4 \rangle} \cdot lbf$ $\quad Mx := loads^{\langle 6 \rangle} \cdot in \cdot lbf$ $\quad Mz := loads^{\langle 8 \rangle} \cdot in \cdot lbf$

* Note that "64-67.txt" is generated from NASPOST result (.LIS file) by just removing all words and comments.

$Ft_i := \left|Fx_i\right|$ $\quad max(Ft) = 26.53\,lbf$ $\quad$ Tensile Load

$Fv_i := \sqrt{\left(Fy_i\right)^2 + \left(Fz_i\right)^2}$ $\quad max(Fv) = 108.82\,lbf$ $\quad$ Shear Load

Prepared By	Name J.R. Thorington	Date 12/06/07	Engineering and Science Contract Group *Structural Analysis Section*	File Name InterfacepanelBolt3
Checked By	C. Bala			Draw ing No. SEG39137684
Title	Bolt Analysis Front Panel to Front Sub-Panel			

Front Panel (SDG39137687-001) to Front sub panel assembly (SDG39137809-701) Bolts

Bolts NAS1133E4, washer NAS1149E0332R, Nut plate MS21076L3E

Flange 1: Front Panel,
Part numbers: SDG39137687
Material: AL ALY 7075-T73

Flange_2: Front SubPanel
Part number: SDG39137809
Material: AL ALY 7075-T7351

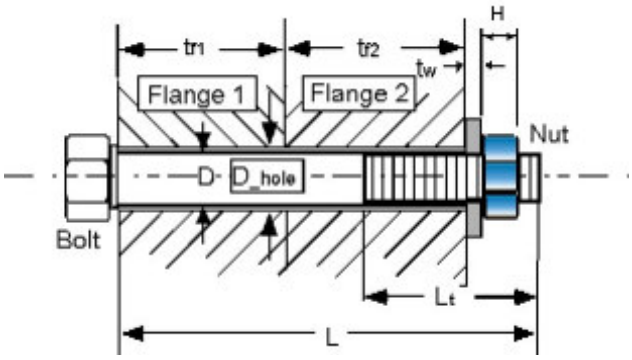

Note: Figure is for reference only.
Not to scale, and actual joint may differ
Washer is on head side only.

Minimum edge distance of flange one: $edge1 := 0.438 \cdot in$

flange two: $edge2 := 0.25 \cdot in$

Loads

Applied tensile load $P := 26.53 lbf$

Applied shear load $V := 108.82 lbf$

Applied bending moment $M := 0 in \cdot lbf$

Factors of Safety

Ultimate $SFu := 2.0$ Yield $SFy := 1.25$ Joint Separation $SFsep := 1.2$

Fitting factor $FF := 1.15$

Temperature data

Assembly $Temp_initial := 70 \cdot deg$

Maximum $Temp_max := 220 \cdot deg$

Minimum $Temp_min := -180 \cdot deg$

note, these are maximum temperatures that hardware sees / if maximum load occurs at a different temperature this will be conservative

Bolt Data

Nominal diameter of bolt $D := .19 \cdot in$

Number of threads/inch $Nt := 32 \cdot \frac{1}{in}$

Shank diameter of bolt $D_shank := .1895 \cdot in$

Note, if there is a retainer groove in the fastener, this should be the calculated diameter to give an equivalent cross sectional area

Total length of bolt $L := .526 \cdot in$

Threaded length $Lt := 0.276 \cdot in$

(If bolt is fully threaded, input Lt = L)

Bolt head dia. across flats $dw := 0.331 \cdot in$ (dia of pressure boss if it exists, otherwise dia of head)

Bolt head height $bh := .133 \cdot in$ (head height is 0 if bolt is flat head)

Thread data lookup table is hidden

Fri Apr 27 14:15:35 2007

This file uses the data shown in \\escfil02\2i11_mathcad\8307_bolts\Rev_D\thread_data.mcd

Temperature correction factor for bolt strength ultimate. $TSu_bolt := 0.96$ Yield $TSy_bolt := 0.96$

Bolt ultimate tensile allowable stress ultimate: $Ftu_bolt := 160000 \cdot psi$ Yield $Fty_bolt := 120000 \cdot psi$

Bolt ultimate shear allowable stress $Fsu_bolt := 0.6 \cdot Ftu_bolt$

Temperature correction factor for bolt modulus $TE_bolt := 0.96$

Modulus of elasticity of bolt $E_bolt := \left(29.1 \cdot 10^{6} \cdot psi\right)$

Thermal coefficients for bolt $\beta_bolt_hot := 9.2 \cdot 10^{-6} \cdot \frac{\frac{in}{in}}{deg}$ $\beta_bolt_cold := 8.0 \cdot 10^{-6} \cdot \frac{\frac{in}{in}}{deg}$

Washer Data

Thickness of washers: head $twh := 0.032 \cdot in$

nut $twn := 0.0 \cdot in$

these are total washer thickness, if there are more than one

Diameter of washer under head, Outer: $Dwoh := 0.438in$ Inner: $Dwih := 0.203 \cdot in$

Diameter of washer under nut, Outer: $Dwon := 0.0in$ Inner: $Dwin := 0.0 \cdot in$

Note: If there are no washer tw's, Dw's and Dwi's should be zero

Modulus of elasticity, head: $E_washerh := \left(29.1 \cdot 10^{6} \cdot psi\right)$

nut: $E_washern := (0 \cdot psi)$

Temperature correction factor for modulus, head: $TE_washerh := 0.96$

nut: $TE_washern := 0.96$

Nut Data

Height of nut $H := 0.250 \cdot in$

Nut dia. across flats $Dn := 0.290 \cdot in$

Temperature correction factor for nut strength $TS_nut := 0.96$

Ultimate allowable stress, tensile: $Ftu_nut := 125000 \cdot psi$

Shear: $Fsu_nut := 0.6 \cdot Ftu_nut$

Ultimate axial strength of nut $Ptu_nut := 2460 \cdot lbf$ *(Reference MS21076)*

Flange data

Stiffness of the joint depends upon number of members in the grip of the fasteners & their material properties,

Thickness of flange 1: $tf1 := .125 \cdot in$ flange 2: $tf2 := .125in$ Diameter of thru hole $D_hole := 0.213 \cdot in$

Modulus of elasticity of these members, with temperature correction factors

Compressive Modulus of elasticity for the parts in the joint $E_flange1 := \left(10.3 \times 10^{6} \cdot psi\right)$ $E_flange2 := \left(10.3 \cdot 10^{6} \cdot psi\right)$

Temperature correction factor (modulus) for flange 1: $Tf1E := 0.95$ flange 2: $Tf2E := 0.95$

Coefficient of thermal expansion for flanges

$$\beta_flange1_hot := 12.75 \cdot 10^{-6} \cdot \frac{\frac{in}{in}}{deg} \qquad \beta_flange2_hot := 12.75 \cdot 10^{-6} \cdot \frac{\frac{in}{in}}{deg}$$

$$\beta_flange1_cold := 12.1 \cdot 10^{-6} \cdot \frac{\frac{in}{in}}{deg} \qquad \beta_flange2_cold := 12.1 \cdot 10^{-6} \cdot \frac{\frac{in}{in}}{deg}$$

Torque/Preload data

Maximum torque $Tmax := 35 \cdot in \cdot lbf$

Minimum torque $Tmin := 30in \cdot lbf$

(Dwg. SEG39137684)

Joint is lubed/dry

Preload Uncertainty $u := 0.25$

Torque coefficient $k := 0.15$

Loading plane factor $n := 0.5$

Stiffness and Margin calculations are hidden

Fri Apr 27 14:15:49 2007

This file uses the calculations shown in \\escfil02\2i11_mathcad\8307_bolts\Rev_D\bolt_stiffness_nut.mcd

Bolt Load data

Bolt/joint stiffness factor $= 0.35$

Max. preload $PLDmax = 1660\,lbf$

Min. preload $PLDmin = 472\,lbf$

Nom. preload $PLDnom = 1228\,lbf$

Preload to yield ratio(nom.) $PLDratio = 0.554$

Joint separation load $Psep = 31.836\,lbf$

Preload due to temperature $Pthr_pos = 124.8\,lbf$

$Pthr_neg = -240.2\,lbf$

Uncertainty factor $u = 0.25$

Torque coefficient $k = 0.15$

Loading plane factor $n = 0.5$

Bolt Load data (cont.)

Applied Tensile load on the bolt $P = 26.53\,lbf$

Applied shear on the bolt $V = 108.82\,lbf$

Applied bending on the bolt $M = 0\,in \cdot lbf$

Max. load on the bolt with preload and Factor of safety

(ultimate) $Pb = 1671\,lbf$

(yield) $Pby = 1667\,lbf$

Max. load on the bolt with preload without factor of safety $Pbapp = 1665\,lbf$

Bolt ultimate tensile strength $PAt = 2957\,lbf$

Thread pullout strength $PAs = 2362\,lbf$

Nut ultimate tensile strength $Ptu_nut = 2362\,lbf$

Bolt shear strength $VAu = 2599\,lbf$

Bolt bending strength $MAu = 61\,in \cdot lbf$

General Checks

length_check = "Bolt length should be increased! nut is fully threaded, but does not extend past nut"

cone_check = "Joint pressure cone does not extend pass flange edge"

preload_check = "NOTE: Nominal preload < 65% of bolt yield strength"

washer_check = "Washers under head and nut do not extend past flanges"

Summary of Margins for bolt:

Joint separation	$MS_1 = 14.64$	Direct Thread shear Ultimate	$MS_6 = 37.7$
Direct Tension Ultimate	$MS_2 = 47.45$	Total Thread shear Ultimate	$MS_7 = 0.41$
Direct Tension Yield	$MS_3 = 57.14$	Shear Ultimate	$MS_8 = 9.39$
Total Tension Ultimate	$MS_4 = 0.77$	Bending Ultimate	$MS_9 = 100$
Total Tension Yield	$MS_5 = 0.33$	Combined shear, tension and bending ultimate	$MS_{10} = 0.77$

Smallest margin of safety for the bolt, and the failure mode:

MSbolt = 0.33 Failure_Mode = "Total Tension Yield"

Prepared By	Name	Date		File Name
	J.R. Thorington	12/06/07		InterfacepanelBolt3
Checked By	C. Bala		Engineering and Science Contract Group *Structural Analysis Section*	Draw ing No. SEG39137684
Title	Bolt Analysis Front Panel to Front Sub-Panel			

Fail-safe Analysis (Conservatively, the loads were doubled to perform fail-safe analysis)

Fail-safe Loads

Applied tensile load $P_FS := 53.06 \cdot lbf$

Applied shear load $V_FS := 217.64 \cdot lbf$

Applied bending moment $M_FS := 0 \cdot in \cdot lbf$

Fail-safe Factors of Safety

Ultimate $SFu_FS := 1.0$

Joint Separation $SFsep_FS := 1.0$

Fail Safe Margin calculations are hidden / stiffness & allowable data is not recalculated

Fri Apr 27 14:16:05 2007

This file uses the calculations shown in \\escfil02\2i11_mathcad\8307_bolts\Rev_D\bolt_stiffness_nut_FS.mcd

Bolt Fail-safe Load data

Joint separation load $Psep_FS = 53.06 lbf$

Max. load on the bolt(ultimate) $Pb_FS = 1670.6 lbf$

Summary of fail-safe Margins for bolt:

Joint separation $MS_FS_1 = 8.38$

Direct Tension Ultimate $MS_FS_2 = 47.45$

Total Tension Ultimate $MS_FS_3 = 0.77$

Direct Thread shear Ultimate $MS_FS_4 = 37.7$

Total Thread shear Ultimate $MS_FS_5 = 0.41$

Shear Ultimate $MS_FS_6 = 9.39$

Bending Ultimate $MS_FS_7 = 10$

Combined shear, tension and bending ultimate $MS_FS_8 = 0.77$

Determination of the smallest fail-safe margin of safety for the bolt, and the failure mode:

$MSbolt_FS = 0.41$ $Failure_Mode_FS = \text{"Total Thread Shear Ultimate (Nut)"}$

Prepared By	Name J.R. Thorington	Date 12/09/07	Engineering and Science Contract Group *Structural Analysis Section*	File Name InterfacepanelBolt4
Checked By	C. Bala			Drawing No. SEG39137684
Title	**Bolt Analysis for Front Sub-Panel/Standoff/Rear Sub-Panel Interface**			

Front Sub-Panel Assembly (SDG39137809-701) to Standoff (SDG39137844-001) to Rear Sub-Panel Assembly (SDG39137809-702) Bolts

Bolts NAS1153E36, 0.190-32UNJF-3A, A-286, 2.526L, Nut Plate MS21076L3E

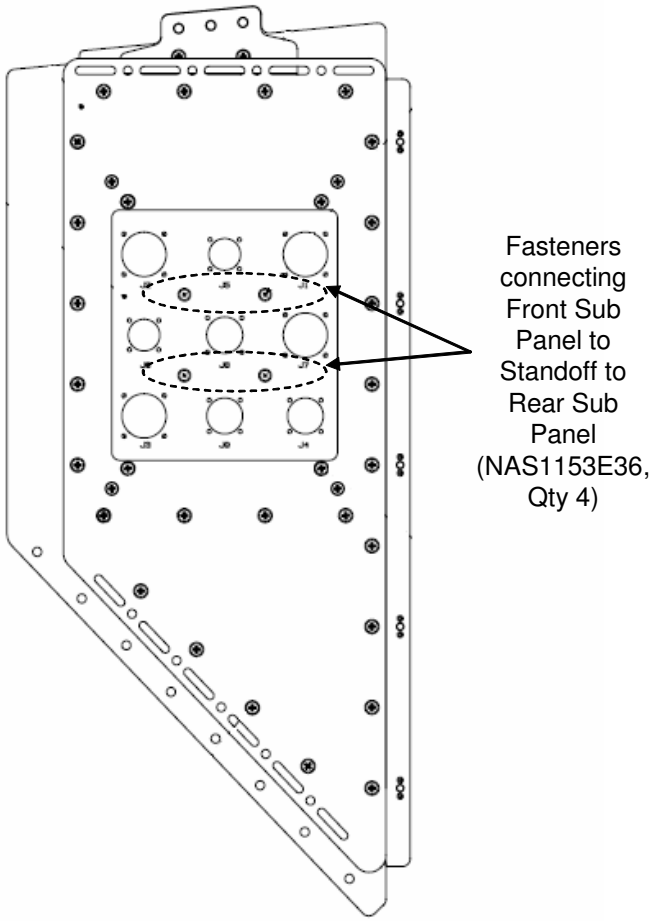

Loads : Bolt forces were sorted by maximum absolute value on all three axes. The tensile load and shear load were calculated for the worse case. All bolt forces reference the Global Coordinate System.

Read in the external datum from NASPOST results:

$loads := READPRN("60\text{-}63.txt")$

$i := 1..rows(loads)$ $\quad rows(loads) = 524$ $\quad j := 2..cols(loads)$ $\quad cols(loads) = 8$

$ID := loads^{\langle 1 \rangle}$ $\quad Fx := loads^{\langle 3 \rangle} \cdot lbf$ $\quad Fz := loads^{\langle 5 \rangle} \cdot lbf$ $\quad My := loads^{\langle 7 \rangle} \cdot in \cdot lbf$

$LC := loads^{\langle 2 \rangle}$ $\quad Fy := loads^{\langle 4 \rangle} \cdot lbf$ $\quad Mx := loads^{\langle 6 \rangle} \cdot in \cdot lbf$ $\quad Mz := loads^{\langle 8 \rangle} \cdot in \cdot lbf$

* Note that "60-63.txt" is generated from NASPOST result (.LIS file) by just removing all words and comments.

$Ft_i := |Fx_i|$ $\quad max(Ft) = 11.84\,lbf$ $\quad$ Tensile Load

$Fv_i := \sqrt{(Fy_i)^2 + (Fz_i)^2}$ $\quad max(Fv) = 4.11\,lbf$ $\quad$ Shear Load

Prepared By	Name	Date		File Name
	J.R. Thorington	12/09/07	Engineering and Science Contract Group	InterfacepanelBolt4
Checked By	C. Bala		*Structural Analysis Section*	Draw ing No. SEG39137684
Title	**Bolt Analysis for Front Sub-Panel/Standoff/Rear Sub-Panel Interface**			

Front Sub-Panel Assembly (SDG39137809-701) to Standoff (SDG39137844-001) to Rear Sub-Panel Assembly (SDG39137809-702) Bolts

Bolts NAS1153E36, 0.190-32UNJF-3A, A-286, 2.526L, Nut Plate MS21076L3E

Flange 1: Front Sub-Panel Assembly
Part number: SDG39137809-701
Material: Al Alloy 7075-T73

Flange ad2: Standoff
Part number: SDG39137844-001
Material: Al Alloy 7075-T7351

Flange 2: Rear Sub-Panel Assembly
Part number: SDG39137809-702
Material: Al Alloy 7075-T73

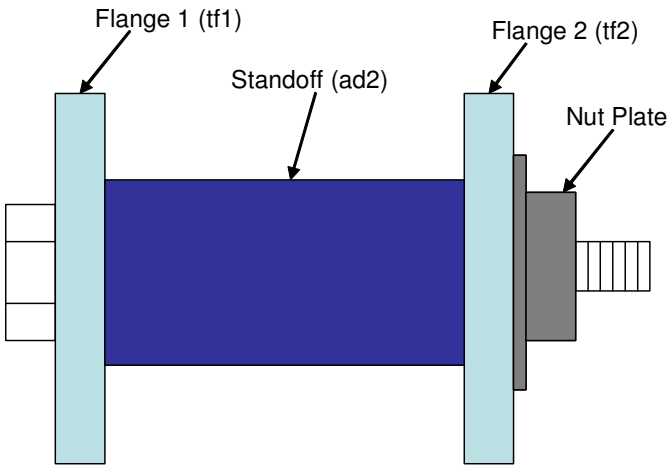

Loads

Applied tensile load $P := 11.8lbf$

Applied shear load $V := 4.1lbf$

Applied bending moment $M := 8.2in \cdot lbf$

Factors of Safety

Ultimate $SFu := 2.0$ Yield $SFy := 1.25$

Joint Separation $SFsep := 1.2$ Fitting factor $FF := 1.15$

Temperature data

Assembly $Temp_initial := 70 \cdot deg$

Maximum $Temp_max := 220 \cdot deg$

Minimum $Temp_min := -180 \cdot deg$

Bolt and Nut Data

Nominal diameter of bolt $D := .19 \cdot in$

Number of threads/inch $Nt := 32 \cdot \frac{1}{in}$

Total length of bolt $L := 2.526 \cdot in$

Height of nut $H := 0.25 \cdot in$

Threaded length $Lt := 0.276 \cdot in$

(If bolt is fully threaded, input Lt = L)

Reference:\\Escfil02\2M31 STRUCTURAL ANALYSIS\Projects\AMS\AMS Analysis Files\5.13 Interface Panel A\InterfacepanelBolt4\thread_data.

Washer Data

Thickness of washers $tw := 0.0 \cdot in$

Outer Diameter of washer $Dw := 0.0in$

Inner Diameter of washer $Dwi := 0.0 \cdot in$

Bolt head dia. across flats $dw := 0.375 \cdot in$ (used only if there is no washer)

Note: If there is no washer tw, Dw and Dwi should be zero

Flange data

Thickness of flange 1 $tf1 := 0.125 \cdot in$

Thickness of flange 2 $tf2 := 0.125in$

Diameter of hole $D_hole := 0.213 \cdot in$

Standoff Data

Thickness of standoff $tw_ad2 := 2.0 \cdot in$

Outer Diameter of standoff $Dw_ad2 := 0.38in$

Inner Diameter of standoff $Dwi_ad2 := 0.2 \cdot in$

Material Property Data

Bolt

Temperature correction factor for bolt strength ultimate. $TSu_bolt := 0.96$ Yield $TSy_bolt := 0.96$

Bolt ultimate tensile allowable stress $Ftu_bolt := 160000 \cdot psi$

Bolt ultimate shear allowable stress $Fsu_bolt := 0.6 \cdot Ftu_bolt$

Bolt yield Tensile allowable stress $Fty_bolt := 120000 \cdot psi$

Temperature correction factor for bolt modulus $TE_bolt := 0.96$

Modulus of elasticity of bolt $E_bolt := \left(29.1 \cdot 10^{6} \cdot psi\right)$

Thermal coeffecient for bolt $\beta_bolt_hot := 9.2 \cdot 10^{-6} \cdot \frac{\frac{in}{in}}{deg}$ $\beta_bolt_cold := 8.0 \cdot 10^{-6} \cdot \frac{\frac{in}{in}}{deg}$

Data for bending modulus of Rupture of bolt $fm := Ftu_bolt$ $fo := Fty_bolt$

Section factor for bolt $k1 := 1.7$ (Ref. Bruhn, page C3.3 & fig C3.7)

Nut

Temperature correction factor for nut strength $TS_nut := 0.96$

Ultimate tensile allowable stress $Ftu_nut := 125000 \cdot psi$

Ultimate Shear allowable stress: $Fsu_nut := 0.6 \cdot Ftu_nut$

Ultimate axial strength of nut $Ptu_nut := 2460 \cdot lbf$ (Ref. MS21076)

Washer

Temperature correction factor for washer modulus $TE_washer := 0.0$

Modulus of elasticity of washer: $E_washer := \left(0.0 \cdot 10^{6} \cdot psi\right)$

Standoff Data

Temperature correction factor for standoff modulus $TE_washer_ad2 := 0.95$

Modulus of elasticity of standoff $E_washer_ad2 := \left(10.3 \cdot 10^{6} \cdot psi\right)$

Thermal coeffecient for standoff $\beta_washer_ad2_hot := 12.75 \cdot 10^{-6} \cdot \frac{\frac{in}{in}}{deg}$ $\beta_washer_ad2_cold := 12.1 \cdot 10^{-6} \cdot \frac{\frac{in}{in}}{deg}$

Flanges

Stiffness of the joint depends upon number of members in the grip of the fasteners,
Modulus of elasticity of these members, and diameters of the bolt and the washer.

Temperature correction factor for flange 1 $Tf1E := 0.95$ (modulus)

Temperature correction factor for flange 2 $Tf2E := 0.95$

Modulus of elasticity for the parts in the joint $E_flange1 := \left(10.3 \cdot 10^{6} \cdot psi\right)$ $E_flange2 := \left(10.3 \cdot 10^{6} \cdot psi\right)$

Coefficient of thermal expansion for flanges $\beta_flange1_hot := 12.75 \cdot 10^{-6} \cdot \frac{\frac{in}{in}}{deg}$ $\beta_flange2_hot := 12.75 \cdot 10^{-6} \cdot \frac{\frac{in}{in}}{deg}$

$\beta_flange1_cold := 12.1 \cdot 10^{-6} \cdot \frac{\frac{in}{in}}{deg}$ $\beta_flange2_cold := 12.1 \cdot 10^{-6} \cdot \frac{\frac{in}{in}}{deg}$

Torque/Preload data

Torque coefficient $k := 0.15$ Preload Percentage: $Per_Preload := 0.49$

Tensile Area: $At := 0.02in^{2}$ $Fp_Preload := Per_Preload \cdot At \cdot Fty_bolt$

Maximum torque $Tmax := Fp_Preload \cdot k \cdot D$

Minimum torque $Tmin := 0.85 \cdot Tmax$

Prepared By	Name J.R. Thorington	Date 12/09/07	Engineering and Science Contract Group *Structural Analysis Section*	File Name InterfacepanelBolt4
Checked By	C. Bala			Draw ing No. SEG39137684
Title	**Bolt Analysis for Front Sub-Panel/Standoff/Rear Sub-Panel Interface**			

Maximum torque $Tmax = 33.516\,in \cdot lbf$ Loading plane factor: $n := 0.5$

Minimum torque $Tmin = 28.489\,in \cdot lbf$ Preload Uncertainty: $u := 0.25$

Reference:\\Escfil02\2M31 STRUCTURAL ANALYSIS\Projects\AMS\AMS Analysis Files\5.13 Interface Panel A\InterfacepanelBolt4\bolt_ stiffnes

Reference:\\Escfil02\2M31 STRUCTURAL ANALYSIS\Projects\AMS\AMS Analysis Files\5.13 Interface Panel A\InterfacepanelBolt4\bolt_ stiffnes

Bolt/joint stiffness factor	$= 0.501$	Preload due to temperature	$Pthr_pos = 202.1\,lbf$
Max. preload	$PLDmax = 1672.1\,lbf$		$Pthr_neg = -389\,lbf$
Min. preload	$PLDmin = 287.2\,lbf$	Uncertainty factor	$u = 0.25$
Joint separation load	$Psep = 14.16\,lbf$	Torque coefficient	$k = 0.15$
Max. load on the bolt(ultimate)	$Pb = 1678.9\,lbf$	Loading plane factor	$n = 0.5$
Max. load on the bolt(yield)	$Pby = 1676.3\,lbf$	Thread pullout strength required to develop full strength of bolt	$PAs = 3406\,lbf$
Bolt ultimate tensile strength	$PAt = 2267.1\,lbf$	Nut ultimate tensile strength	$Ptu_nut = 2267.1\,lbf$

Length_check = "Bolt length should be increased!"

Summary of Margins for bolt:

Joint separation	$MS_1 = 22.53$	Direct Thread shear Ultimate	$MS_6 = 124.5$
Direct Tension Ultimate	$MS_2 = 82.53$	Total Thread shear Ultimate	$MS_7 = 1.03$
Direct Tension Yield	$MS_3 = 124.5$	Shear Ultimate	$MS_8 = 265.01$
Total Tension Ultimate	$MS_4 = 0.35$	Bending Ultimate	$MS_9 = 4.16$
Total Tension Yield	$MS_5 = 0.27$	Combined shear, tension and bending ultimate	$MS_{10} = 0.07$

Determination of the smallest margin of safety for the bolt, and the failure mode:

$MSbolt := \min(MS)$

$MSbolt = 0.07$ Failure_Mode = "Combined Shear Tension Bending Ultimate"

Fail-safe Analysis (Conservatively, the loads were doubled to perform fail-safe analysis)

Fail-safe Loads

Applied tensile load $P_FS := 23.6 \cdot lbf$

Applied shear load $V_FS := 8.22 \cdot lbf$

Applied bending moment $M_FS := 16.4 \cdot in \cdot lbf$

Fail-safe Factors of Safety

Ultimate $SFu_FS := 1.0$

Joint Separation $SFsep_FS := 1.0$

Reference:\\Escfil02\2M31 STRUCTURAL ANALYSIS\Projects\AMS\AMS Analysis Files\5.13 Interface Panel A\InterfacepanelBolt4\bolt_ stiffnes

Reference:\\Escfil02\2M31 STRUCTURAL ANALYSIS\Projects\AMS\AMS Analysis Files\5.13 Interface Panel A\InterfacepanelBolt4\bolt_ stiffnes

Bolt Fail-safe Load data

Joint separation load $Psep_FS = 23.6\,lbf$

Max. load on the bolt(ultimate) $Pb_FS = 1678.9\,lbf$

Summary of fail-safe Margins for bolt:

Joint separation	$MS_FS_1 = 13.12$	Total Thread shear Ultimate	$MS_FS_5 = 1.03$
Direct Tension Ultimate	$MS_FS_2 = 82.53$	Shear Ultimate	$MS_FS_6 = 264.36$
Total Tension Ultimate	$MS_FS_3 = 0.35$	Bending Ultimate	$MS_FS_7 = 4.16$
Direct Thread shear Ultimate	$MS_FS_4 = 124.5$	Combined shear, tension and bending ultimate	$MS_FS_8 = 0.07$

Determination of the smallest fail-safe margin of safety for the bolt, and the failure mode:

$MSbolt_FS := \min(MS_FS)$

$MSbolt_FS = 0.07$ Failure_Mode_FS = "Combined Shear Tension Bending Ultimate"

Prepared By	Name J.R.Thorington	Date 12/06/07	Engineering and Science Contract Group *Structural Analysis Section*	File Name InterfacepanelBolt5
Checked By	C. Bala			Drawing No. SEG39137684
Title	Bolt Analysis for Base Panel Stiffener to Base Panel			

Base Panel (SDG39137685-001) to Base panel Stiffener (SDG39137843-001) bolts

Check Bolts NAS1133E4, 0.190-32UNJF A-286, washer NAS11490332R, Nut Plate MS21076L3E, A-286

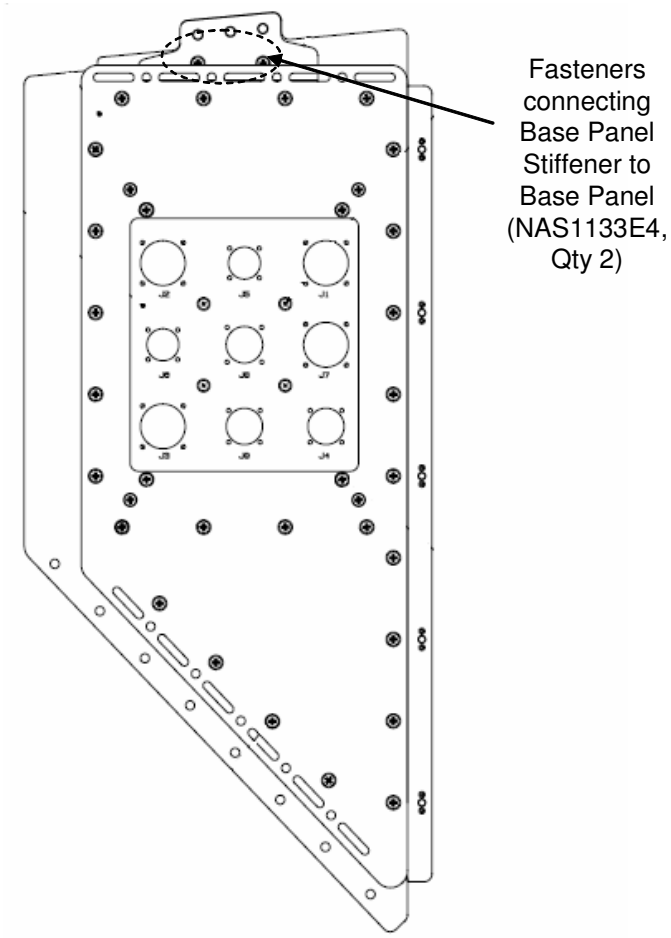

Loads : Bolt forces were sorted by maximum absolute value on all three axes. The tensile load and shear load were calculated for the worse case. All bolt forces reference the Global Coordinate System.

Read in the external datum from NASPOST results:

$loads := READPRN("58\text{-}59.txt")$

$i := 1..rows(loads)$ $\quad rows(loads) = 262$ $\quad j := 2..cols(loads)$ $\quad cols(loads) = 8$

$ID := loads^{\langle 1 \rangle}$ $\quad Fx := loads^{\langle 3 \rangle} \cdot lbf$ $\quad Fz := loads^{\langle 5 \rangle} \cdot lbf$ $\quad My := loads^{\langle 7 \rangle} \cdot in \cdot lbf$

$LC := loads^{\langle 2 \rangle}$ $\quad Fy := loads^{\langle 4 \rangle} \cdot lbf$ $\quad Mx := loads^{\langle 6 \rangle} \cdot in \cdot lbf$ $\quad Mz := loads^{\langle 8 \rangle} \cdot in \cdot lbf$

* Note that "58-59.txt" is generated from NASPOST result (.LIS file) by just removing all words and comments.

$Ft_i := |Fx_i|$ $\quad max(Ft) = 27.16\,lbf$ $\quad$ Tensile Load

$Fv_i := \sqrt{(Fy_i)^2 + (Fz_i)^2}$ $\quad max(Fv) = 405.5\,lbf$ $\quad$ Shear Load

Prepared By	Name J.R.Thorington	Date 12/06/07	Engineering and Science Contract Group *Structural Analysis Section*	File Name InterfacepanelBolt5
Checked By	C. Bala			Draw ing No. SEG39137684
Title	Bolt Analysis for Base Panel Stiffener to Base Panel			

Base Panel (SDG39137685-001) to Base panel Stiffener (SDG39137843-001) bolts

Check Bolts NAS1133E4, 0.190-32UNJF A-286, washer NAS11490332R, Nut Plate MS21076L3E, A-286

Flange 1: Base Panel Stiffener
Part numbers: SDG39137843
Material: AL ALY 7075-T7351

Flange_2: Base Panel
Part number: SDG39137685
Material: AL ALY 7075-T73

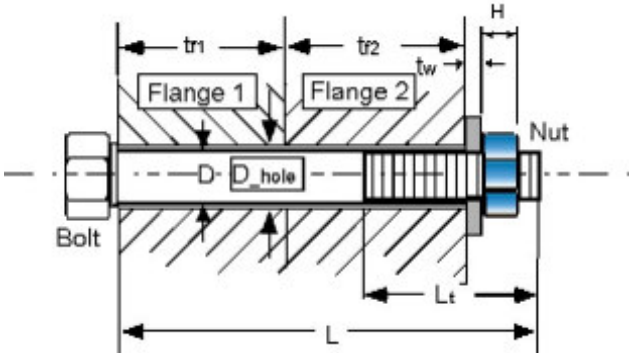

Note: Figure is for reference only.
Not to scale, and actual joint may differ
Washer may be on nut side, head side, or both

Minimum edge distance of flange one: $edge1 := 0.636 \cdot in$

flange two: $edge2 := 0.969 \cdot in$

Loads

Applied tensile load $P := 27.16 lbf$

Applied shear load $V := 405.5 lbf$

Applied bending moment $M := 0 in \cdot lbf$

Factors of Safety

Ultimate $SFu := 2.0$ Yield $SFy := 1.25$ Joint Separation $SFsep := 1.2$

Fitting factor $FF := 1.15$

Temperature data

Assembly $Temp_initial := 70 \cdot deg$

Maximum $Temp_max := 220 \cdot deg$

Minimum $Temp_min := -180 \cdot deg$

note, these are maximum temperatures that hardware sees / if maximum load occurs at a different temperature this will be conservative

Bolt Data

Nominal diameter of bolt $D := .19 \cdot in$

Number of threads/inch $Nt := 32 \cdot \frac{1}{in}$

Shank diameter of bolt $D_shank := .1895 \cdot in$

Note, if there is a retainer groove in the fastener, this should be the calculated diameter to give an equivalent cross sectional area

Total length of bolt $L := .526 \cdot in$

Threaded length $Lt := 0.276 \cdot in$ (If bolt is fully threaded, input Lt = L)

Bolt head dia. across flats $dw := 0.331 \cdot in$ (dia of pressure boss if it exists, otherwise dia of head)

Bolt head height $bh := .133 \cdot in$ (head height is 0 if bolt is flat head)

Thread data lookup table is hidden

Fri Apr 27 14:15:35 2007

This file uses the data shown in \\escfil02\2i11_mathcad\8307_bolts\Rev_D\thread_data.mcd

Temperature correction factor for bolt strength ultimate. $TSu_bolt := 0.96$ Yield $TSy_bolt := 0.96$

Bolt ultimate tensile allowable stress ultimate: $Ftu_bolt := 160000 \cdot psi$ Yield $Fty_bolt := 120000 \cdot psi$

Bolt ultimate shear allowable stress $Fsu_bolt := 0.6 \cdot Ftu_bolt$

Temperature correction factor for bolt modulus $TE_bolt := 0.96$

Modulus of elasticity of bolt $E_bolt := \left(29.1 \cdot 10^{6} \cdot psi\right)$

Thermal coefficients for bolt $\beta_bolt_hot := 9.2 \cdot 10^{-6} \cdot \frac{\frac{in}{in}}{deg}$ $\beta_bolt_cold := 8.0 \cdot 10^{-6} \cdot \frac{\frac{in}{in}}{deg}$

Washer Data

Thickness of washers: head $twh := 0.032 \cdot in$

nut $twn := 0.0 \cdot in$

these are total washer thickness, if there are more than one

Diameter of washer under head, Outer: $Dwoh := 0.438in$ Inner: $Dwih := 0.203 \cdot in$

Diameter of washer under nut, Outer: $Dwon := 0.0in$ Inner: $Dwin := 0.0 \cdot in$

Note: If there are no washer tw's, Dw's and Dwi's should be zero

Modulus of elasticity, head: $E_washerh := \left(29.1 \cdot 10^{6} \cdot psi\right)$

nut: $E_washern := (0 \cdot psi)$

Temperature correction factor for modulus, head: $TE_washerh := 0.96$

nut: $TE_washern := 0.96$

Nut Data

Height of nut $H := 0.250 \cdot in$

Nut dia. across flats $Dn := 0.290 \cdot in$

Temperature correction factor for nut strength $TS_nut := 0.96$

Ultimate allowable stress, tensile: $Ftu_nut := 125000 \cdot psi$ Shear: $Fsu_nut := 0.6 \cdot Ftu_nut$

Ultimate axial strength of nut $Ptu_nut := 2460 \cdot lbf$ *(Reference MS21076)*

Prepared By	Name J.R.Thorington	Date 12/06/07	Engineering and Science Contract Group *Structural Analysis Section*	File Name InterfacepanelBolt5
Checked By	C. Bala			Drawing No. SEG39137684
Title	Bolt Analysis for Base Panel Stiffener to Base Panel			

Flange data

Stiffness of the joint depends upon number of members in the grip of the fasteners & their material properties,

Thickness of flange 1: $tf1 := .120 \cdot in$ flange 2: $tf2 := .125in$ Diameter of thru hole $D_hole := 0.213 \cdot in$

Modulus of elasticity of these members, with temperature correction factors

Compressive Modulus of elasticity for the parts in the joint $E_flange1 := \left(10.3 \times 10^{6} \cdot psi\right)$ $E_flange2 := \left(10.3 \cdot 10^{6} \cdot psi\right)$

Temperature correction factor (modulus) for flange 1: $Tf1E := 0.95$ flange 2: $Tf2E := 0.95$

Coefficient of thermal expansion for flanges

$$\beta_flange1_hot := 12.75 \cdot 10^{-6} \cdot \frac{\frac{in}{in}}{deg} \qquad \beta_flange2_hot := 12.75 \cdot 10^{-6} \cdot \frac{\frac{in}{in}}{deg}$$

$$\beta_flange1_cold := 12.1 \cdot 10^{-6} \cdot \frac{\frac{in}{in}}{deg} \qquad \beta_flange2_cold := 12.1 \cdot 10^{-6} \cdot \frac{\frac{in}{in}}{deg}$$

Torque/Preload data

Maximum torque $Tmax := 35 \cdot in \cdot lbf$

Minimum torque $Tmin := 30in \cdot lbf$

(Dwg. SEG39137684)

Joint is lubed/dry

Preload Uncertainty $u := 0.25$

Torque coefficient $k := 0.15$

Loading plane factor $n := 0.5$

Stiffness and Margin calculations are hidden

Fri Apr 27 14:15:49 2007

This file uses the calculations shown in \\escfil02\2i11_mathcad\8307_bolts\Rev_D\bolt_stiffness_nut.mcd

Bolt Load data

Bolt/joint stiffness factor $= 0.35$

Max. preload $PLDmax = 1659\,lbf$

Min. preload $PLDmin = 474\,lbf$

Nom. preload $PLDnom = 1228\,lbf$

Preload to yield ratio(nom.) $PLDratio = 0.554$

Joint separation load $Psep = 32.592\,lbf$

Preload due to temperature $Pthr_pos = 123.9\,lbf$

$Pthr_neg = -238.4\,lbf$

Uncertainty factor $u = 0.25$

Torque coefficient $k = 0.15$

Loading plane factor $n = 0.5$

Bolt Load data (cont.)

Applied Tensile load on the bolt $P = 27.16\,lbf$

Applied shear on the bolt $V = 405.5\,lbf$

Applied bending on the bolt $M = 0\,in \cdot lbf$

Max. load on the bolt with preload and Factor of safety

(ultimate) $Pb = 1670\,lbf$

(yield) $Pby = 1666\,lbf$

Max. load on the bolt with preload without factor of safety $Pbapp = 1664\,lbf$

Bolt ultimate tensile strength $PAt = 2957\,lbf$

Thread pullout strength $PAs = 2362\,lbf$

Nut ultimate tensile strength $Ptu_nut = 2362\,lbf$

Bolt shear strength $VAu = 2599\,lbf$

Bolt bending strength $MAu = 61\,in \cdot lbf$

General Checks

length_check = "Bolt length should be increased! nut is fully threaded, but does not extend past nut"

cone_check = "Joint pressure cone does not extend pass flange edge"

preload_check = "NOTE: Nominal preload < 65% of bolt yield strength"

washer_check = "Washers under head and nut do not extend past flanges"

Summary of Margins for bolt:

Joint separation	$MS_1 = 14.34$	Direct Thread shear Ultimate	$MS_6 = 36.8$
Direct Tension Ultimate	$MS_2 = 46.33$	Total Thread shear Ultimate	$MS_7 = 0.41$
Direct Tension Yield	$MS_3 = 55.8$	Shear Ultimate	$MS_8 = 1.79$
Total Tension Ultimate	$MS_4 = 0.77$	Bending Ultimate	$MS_9 = 100$
Total Tension Yield	$MS_5 = 0.33$	Combined shear, tension and bending ultimate	$MS_{10} = 0.6$

Smallest margin of safety for the bolt, and the failure mode:

MSbolt = 0.33 Failure_Mode = "Total Tension Yield"

Prepared By	Name	Date	Engineering and Science Contract Group	File Name
	J.R.Thorington	12/06/07		InterfacepanelBolt5
Checked By	C. Bala		*Structural Analysis Section*	Draw ing No. SEG39137684
Title	Bolt Analysis for Base Panel Stiffener to Base Panel			

Fail-safe Analysis (Conservatively, the loads were doubled to perform fail-safe analysis)

Fail-safe Loads

Applied tensile load $P_FS := 54.32 \cdot lbf$

Applied shear load $V_FS := 811 \cdot lbf$

Applied bending moment $M_FS := 0 \cdot in \cdot lbf$

Fail-safe Factors of Safety

Ultimate $SFu_FS := 1.0$

Joint Separation $SFsep_FS := 1.0$

Fail Safe Margin calculations are hidden / stiffness & allowable data is not recalculated

Fri Apr 27 14:16:05 2007

This file uses the calculations shown in \\escfil02\2i11_mathcad\8307_bolts\Rev_D\bolt_stiffness_nut_FS.mcd

Bolt Fail-safe Load data

Joint separation load $Psep_FS = 54.32\,lbf$

Max. load on the bolt(ultimate) $Pb_FS = 1669.9\,lbf$

Summary of fail-safe Margins for bolt:

Joint separation $MS_FS_1 = 8.2$

Direct Tension Ultimate $MS_FS_2 = 46.33$

Total Tension Ultimate $MS_FS_3 = 0.77$

Direct Thread shear Ultimate $MS_FS_4 = 36.8$

Total Thread shear Ultimate $MS_FS_5 = 0.41$

Shear Ultimate $MS_FS_6 = 1.79$

Bending Ultimate $MS_FS_7 = 10$

Combined shear, tension and bending ultimate $MS_FS_8 = 0.6$

Determination of the smallest fail-safe margin of safety for the bolt, and the failure mode:

$MSbolt_FS = 0.41$ $Failure_Mode_FS = \text{"Total Thread Shear Ultimate (Nut)"}$

Prepared By	Name	Date	Engineering and Science Contract Group	File Name
	J.R.Thorington	12/06/07		InterfacepanelBolt6
Checked By	C. Bala		*Structural Analysis Section*	Draw ing No. SEG39137684
Title	Bolt Analysis for Angle Bracket to C-channel A			

Angle Bracket (SEG39137686-705) to C-Channel A Assembly (SEG39137686-701) Bolts

Bolts NAS1133E4, washer NAS1149E0332R, Nut plate MS21076L3E

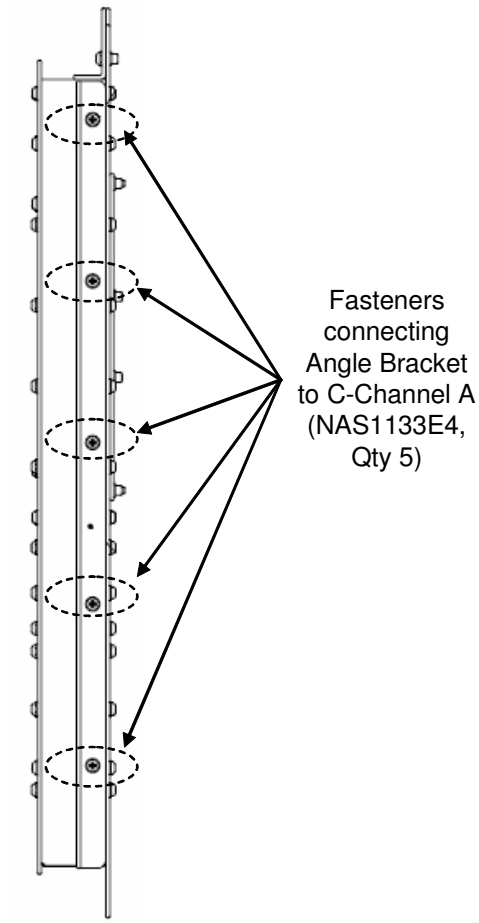

Loads : Bolt forces were sorted by maximum absolute value on all three axes. The tensile load and shear load were calculated for the worse case. All bolt forces reference the Global Coordinate System.

Read in the external datum from NASPOST results:

$loads := READPRN("53\text{-}57.txt")$

$i := 1..rows(loads)$ $\quad rows(loads) = 655$ $\quad j := 2..cols(loads)$ $\quad cols(loads) = 8$

$ID := loads^{\langle 1 \rangle}$ $\quad Fx := loads^{\langle 3 \rangle} \cdot lbf$ $\quad Fz := loads^{\langle 5 \rangle} \cdot lbf$ $\quad My := loads^{\langle 7 \rangle} \cdot in \cdot lbf$

$LC := loads^{\langle 2 \rangle}$ $\quad Fy := loads^{\langle 4 \rangle} \cdot lbf$ $\quad Mx := loads^{\langle 6 \rangle} \cdot in \cdot lbf$ $\quad Mz := loads^{\langle 8 \rangle} \cdot in \cdot lbf$

* Note that "1-52.txt" is generated from NASPOST result (.LIS file) by just removing all words and comments.

$Ft_i := |Fy_i|$ $\quad max(Ft) = 111.24\,lbf$ $\quad$ Tensile Load

$Fv_i := \sqrt{(Fx_i)^2 + (Fz_i)^2}$ $\quad max(Fv) = 13.68\,lbf$ $\quad$ Shear Load

Prepared By	Name J.R.Thorington	Date 12/06/07	Engineering and Science Contract Group *Structural Analysis Section*	File Name InterfacepanelBolt6
Checked By	C. Bala			Draw ing No. SEG39137684
Title	Bolt Analysis for Angle Bracket to C-channel A			

Angle Bracket (SEG39137686-705) to C-Channel A Assembly (SEG39137686-701) Bolts

Bolts NAS1133E4, washer NAS1149E0332R, Nut plate MS21076L3E

Flange 1: Angle Bracket
Part numbers: SEG39137686-705
Material: AL ALY 7075-T7351

Flange 2: C-Channel A assembly
Part number: SEG39137686-701
Material: AL ALY 7075-T7351

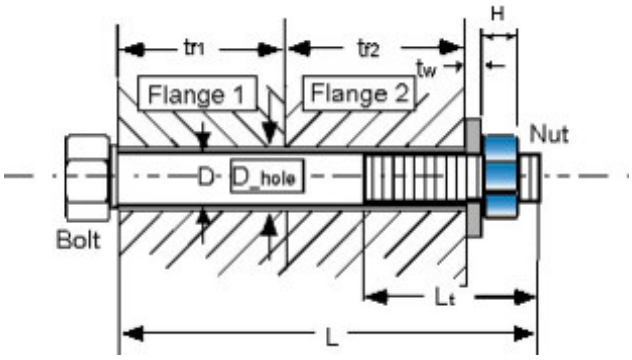

Note: Figure is for reference only.
Not to scale, and actual joint may differ
Washer may be on nut side, head side, or both

Minimum edge distance of flange one: $edge1 := 0.312 \cdot in$

flange two: $edge2 := 0.312 \cdot in$

Loads

Applied tensile load $P := 111.24 lbf$

Applied shear load $V := 13.68 lbf$

Applied bending moment $M := 0 in \cdot lbf$

Factors of Safety

Ultimate $SFu := 2.0$ Yield $SFy := 1.25$ Joint Separation $SFsep := 1.2$

Fitting factor $FF := 1.15$

Temperature data

Assembly $Temp_initial := 70 \cdot deg$

Maximum $Temp_max := 220 \cdot deg$

Minimum $Temp_min := -180 \cdot deg$

note, these are maximum temperatures that hardware sees / if maximum load occurs at a different temperature this will be conservative

Bolt Data

Nominal diameter of bolt $D := .19 \cdot in$

Number of threads/inch $Nt := 32 \cdot \frac{1}{in}$

Shank diameter of bolt $D_shank := .1895 \cdot in$

Note, if there is a retainer groove in the fastener, this should be the calculated diameter to give an equivalent cross sectional area

Total length of bolt $L := .526 \cdot in$

Threaded length $Lt := 0.276 \cdot in$ (If bolt is fully threaded, input Lt = L)

Bolt head dia. across flats $dw := 0.331 \cdot in$ (dia of pressure boss if it exists, otherwise dia of head)

Bolt head height $bh := .133 \cdot in$ (head height is 0 if bolt is flat head)

Prepared By	Name J.R.Thorington	Date 12/06/07	Engineering and Science Contract Group *Structural Analysis Section*	File Name InterfacepanelBolt6
Checked By	C. Bala			Draw ing No. SEG39137684
Title	Bolt Analysis for Angle Bracket to C-channel A			

Thread data lookup table is hidden

Fri Apr 27 14:15:35 2007

This file uses the data shown in \\escfil02\2i11_mathcad\8307_bolts\Rev_D\thread_data.mcd

Temperature correction factor for bolt strength ultimate. $TSu_bolt := 0.96$ Yield $TSy_bolt := 0.96$

Bolt ultimate tensile allowable stress ultimate: $Ftu_bolt := 160000 \cdot psi$ Yield $Fty_bolt := 120000 \cdot psi$

Bolt ultimate shear allowable stress $Fsu_bolt := 0.6 \cdot Ftu_bolt$

Temperature correction factor for bolt modulus $TE_bolt := 0.96$

Modulus of elasticity of bolt $E_bolt := \left(29.1 \cdot 10^{6} \cdot psi\right)$

Thermal coefficients for bolt $\beta_bolt_hot := 9.2 \cdot 10^{-6} \cdot \frac{\frac{in}{in}}{deg}$ $\beta_bolt_cold := 8.0 \cdot 10^{-6} \cdot \frac{\frac{in}{in}}{deg}$

Washer Data

Thickness of washers: head $twh := 0.032 \cdot in$

nut $twn := 0.0 \cdot in$

these are total washer thickness, if there are more than one

Diameter of washer under head, Outer: $Dwoh := 0.438in$ Inner: $Dwih := 0.203 \cdot in$

Diameter of washer under nut, Outer: $Dwon := 0.0in$ Inner: $Dwin := 0.0 \cdot in$

Note: If there are no washer tw's, Dw's and Dwi's should be zero

Modulus of elasticity, head: $E_washerh := \left(29.1 \cdot 10^{6} \cdot psi\right)$

nut: $E_washern := (0 \cdot psi)$

Temperature correction factor for modulus, head: $TE_washerh := 0.96$

nut: $TE_washern := 0.96$

Nut Data

Height of nut $H := 0.250 \cdot in$

Nut dia. across flats $Dn := 0.290 \cdot in$

Temperature correction factor for nut strength $TS_nut := 0.96$

Ultimate allowable stress, tensile: $Ftu_nut := 125000 \cdot psi$

Shear: $Fsu_nut := 0.6 \cdot Ftu_nut$

Ultimate axial strength of nut $Ptu_nut := 2460 \cdot lbf$ *(Reference MS21076)*

Prepared By	Name	Date	Engineering and Science Contract Group	File Name
	J.R.Thorington	12/06/07		InterfacepanelBolt6
Checked By	C. Bala		*Structural Analysis Section*	Draw ing No. SEG39137684
Title	Bolt Analysis for Angle Bracket to C-channel A			

Flange data

Stiffness of the joint depends upon number of members in the grip of the fasteners & their material properties,

Thickness of flange 1: $tf1 := .120 \cdot in$ flange 2: $tf2 := .120in$ Diameter of thru hole $D_hole := 0.213 \cdot in$

Modulus of elasticity of these members, with temperature correction factors

Compressive Modulus of elasticity for the parts in the joint $E_flange1 := \left(10.3 \times 10^{6} \cdot psi\right)$ $E_flange2 := \left(10.3 \cdot 10^{6} \cdot psi\right)$

Temperature correction factor (modulus) for flange 1: $Tf1E := 0.95$ flange 2: $Tf2E := 0.95$

Coefficient of thermal expansion for flanges

$$\beta_flange1_hot := 12.75 \cdot 10^{-6} \cdot \frac{\frac{in}{in}}{deg} \qquad \beta_flange2_hot := 12.75 \cdot 10^{-6} \cdot \frac{\frac{in}{in}}{deg}$$

$$\beta_flange1_cold := 12.1 \cdot 10^{-6} \cdot \frac{\frac{in}{in}}{deg} \qquad \beta_flange2_cold := 12.1 \cdot 10^{-6} \cdot \frac{\frac{in}{in}}{deg}$$

Torque/Preload data

Maximum torque $Tmax := 35 \cdot in \cdot lbf$

Minimum torque $Tmin := 30in \cdot lbf$

(Dwg. SEG39137684)

Joint is lubed/dry

Preload Uncertainty $u := 0.25$

Torque coefficient $k := 0.15$

Loading plane factor $n := 0.5$

Stiffness and Margin calculations are hidden

Fri Apr 27 14:15:49 2007

This file uses the calculations shown in \\escfil02\2i11_mathcad\8307_bolts\Rev_D\bolt_stiffness_nut.mcd

Bolt Load data

Bolt/joint stiffness factor $= 0.351$

Max. preload $PLDmax = 1658\,lbf$

Min. preload $PLDmin = 476\,lbf$

Nom. preload $PLDnom = 1228\,lbf$

Preload to yield ratio(nom.) $PLDratio = 0.554$

Joint separation load $Psep = 133.488\,lbf$

Preload due to temperature $Pthr_pos = 122.9\,lbf$

$Pthr_neg = -236.6\,lbf$

Uncertainty factor $u = 0.25$

Torque coefficient $k = 0.15$

Loading plane factor $n = 0.5$

Bolt Load data (cont.)

Applied Tensile load on the bolt $P = 111.24\,lbf$

Applied shear on the bolt $V = 13.68\,lbf$

Applied bending on the bolt $M = 0\,in \cdot lbf$

Max. load on the bolt with preload and Factor of safety

(ultimate) $Pb = 1703\,lbf$

(yield) $Pby = 1686\,lbf$

Max. load on the bolt with preload without factor of safety $Pbapp = 1680\,lbf$

Bolt ultimate tensile strength $PAt = 2957\,lbf$

Thread pullout strength $PAs = 2362\,lbf$

Nut ultimate tensile strength $Ptu_nut = 2362\,lbf$

Bolt shear strength $VAu = 2599\,lbf$

Bolt bending strength $MAu = 61\,in \cdot lbf$

General Checks

length_check = "Bolt length should be increased! nut is fully threaded, but does not extend past nut"

cone_check = "Joint pressure cone does not extend pass flange edge"

preload_check = "NOTE: Nominal preload < 65% of bolt yield strength"

washer_check = "Washers under head and nut do not extend past flanges"

Summary of Margins for bolt:

Joint separation	$MS_1 = 2.76$	Direct Thread shear Ultimate	$MS_6 = 8.23$
Direct Tension Ultimate	$MS_2 = 10.56$	Total Thread shear Ultimate	$MS_7 = 0.39$
Direct Tension Yield	$MS_3 = 12.87$	Shear Ultimate	$MS_8 = 81.61$
Total Tension Ultimate	$MS_4 = 0.74$	Bending Ultimate	$MS_9 = 100$
Total Tension Yield	$MS_5 = 0.32$	Combined shear, tension and bending ultimate	$MS_{10} = 0.74$

Smallest margin of safety for the bolt, and the failure mode:

MSbolt = 0.32 Failure_Mode = "Total Tension Yield"

Prepared By	Name	Date		File Name
	J.R.Thorington	12/06/07	Engineering and Science Contract Group *Structural Analysis Section*	InterfacepanelBolt6
Checked By	C. Bala			Draw ing No. SEG39137684
Title	Bolt Analysis for Angle Bracket to C-channel A			

Fail-safe Analysis (Conservatively, the loads were doubled to perform fail-safe analysis)

Fail-safe Loads

Applied tensile load $P_FS := 222.48 \cdot lbf$

Applied shear load $V_FS := 27.36 \cdot lbf$

Applied bending moment $M_FS := 0 \cdot in \cdot lbf$

Fail-safe Factors of Safety

Ultimate $SFu_FS := 1.0$

Joint Separation $SFsep_FS := 1.0$

Fail Safe Margin calculations are hidden / stiffness & allowable data is not recalculated

Fri Apr 27 14:16:05 2007

This file uses the calculations shown in \\escfil02\2i11_mathcad\8307_bolts\Rev_D\bolt_stiffness_nut_FS.mcd

Bolt Fail-safe Load data

Joint separation load $Psep_FS = 222.48\,lbf$

Max. load on the bolt(ultimate) $Pb_FS = 1702.9\,lbf$

Summary of fail-safe Margins for bolt:

Joint separation $MS_FS_1 = 1.26$

Direct Tension Ultimate $MS_FS_2 = 10.56$

Total Tension Ultimate $MS_FS_3 = 0.74$

Direct Thread shear Ultimate $MS_FS_4 = 8.23$

Total Thread shear Ultimate $MS_FS_5 = 0.39$

Shear Ultimate $MS_FS_6 = 81.61$

Bending Ultimate $MS_FS_7 = 10$

Combined shear, tension and bending ultimate $MS_FS_8 = 0.74$

Determination of the smallest fail-safe margin of safety for the bolt, and the failure mode:

$MSbolt_FS = 0.39$ $Failure_Mode_FS = \text{"Total Thread Shear Ultimate (Nut)"}$

6.0 Miscellaneous Analysis

6.1 Vacuum Case Cable Brackets

MINIMUM MARGINS OF SAFETY:

PART	Material	Elem ID	Subcase	MSu	Page
Vacuum Case Cable Bracket	Al 6061-T651	466	18	5.3	6.1-10

Fasteners Minimum Margin of Safety Summary:

PART	Description	Material	Failure Mode	Margin of Safety	Page
NAS1351N3-24	Fasteners connecting Integration Cable Bracket to Lower support Ring/Outer Cylinder	A286	Total Tension Yield	0.2 (yield)	6.1-15

Note: The factor of safety for ultimate is 2.0 and the factor of safety for yield is 1.25.

Vacuum Case Cable Bracket

The vacuum case cable bracket is designed to support a short run of electronics cables for the CAB. The designers have estimated that the mass of the supported cables are 0.22 lb (100 grams) as stated in an e-mail from Franck Cadoux on June 23, 2008.

Bracket Characteristics

1. Attached to the lower vacuum case support ring by two fasteners with nuts (NAS1351N3-24).
2. Material: 6061-T651 Aluminum plate

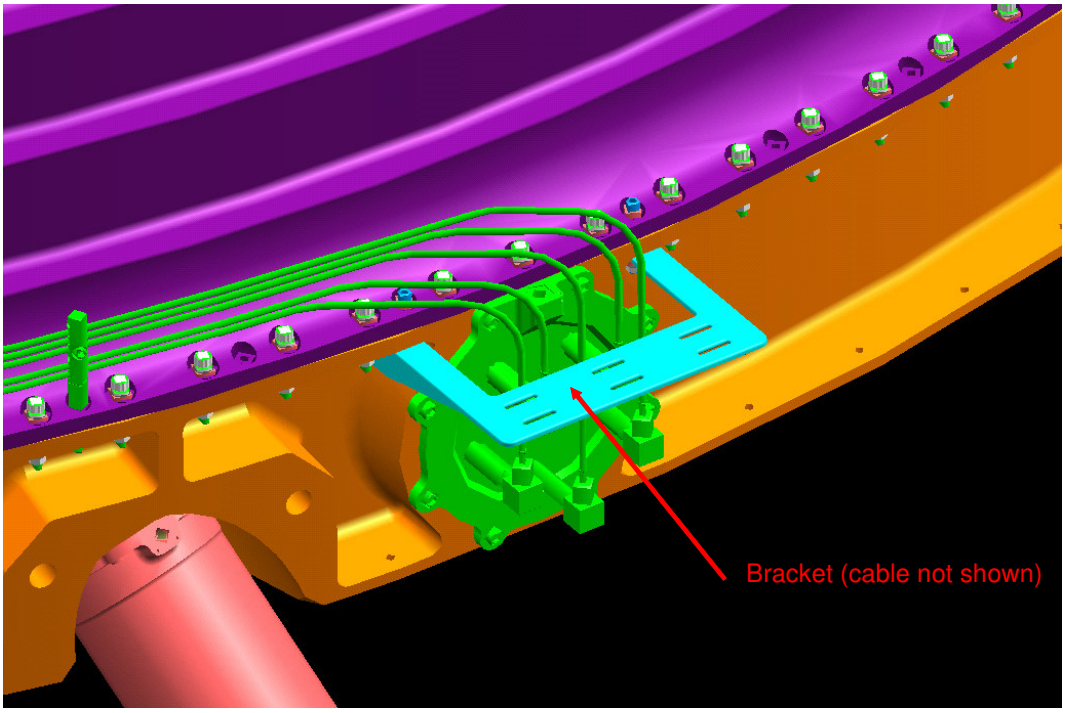

Prepared By	Name	Date		File Name
	C.Lauritzen	07/01/08		vc-cable-bracket
Checked By	G. Reyes		**Engineering and Science Contract Group** *Structural Analysis Section*	Draw ing No. SDG39135877
Title	Vacuum Case Cable Bracket			

An excerpt from the engineering drawing with the bracket dimensions is shown below:

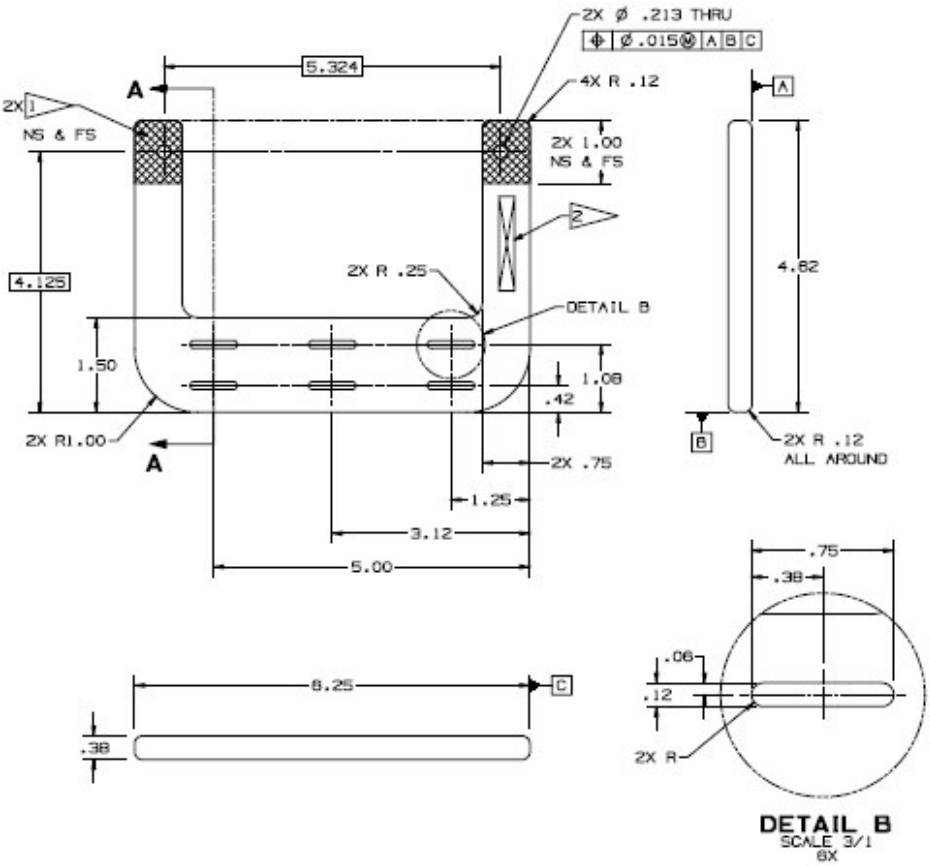

Loads on the Vacuum Case Cable Bracket

This bracket was analyzed for static load combinations based on the design loads provided in the AMS-02 Structural Verification Plan (JSC 28792, Rev. E) in Table 4-4 for small secondary structures. A load factor of 40 g's was applied in each axis with a simultaneous load of 10 g's in the two orthogonal axes. All positive and negative combinations of the loads were considered.

Load Cases

Case ID	Nx	Ny	Nz
1	40	10	10
2	40	10	-10
3	40	-10	10
4	40	-10	-10
5	-40	10	10
6	-40	10	-10
7	-40	-10	10
8	-40	-10	-10
9	10	40	10
10	10	40	-10
11	10	-40	10
12	10	-40	-10
13	-10	40	10
14	-10	40	-10
15	-10	-40	10
16	-10	-40	-10
17	10	10	40
18	10	10	-40
19	10	-10	40
20	10	-10	-40
21	-10	10	40
22	-10	10	-40
23	-10	-10	40
24	-10	-10	-40

Math Model of the Vacuum Case Cable Bracket

The finite element model for the bracket consists of plate elements (CQUAD4) with appropriate properties to represent the thickness and materials. The mass of the cable was distributed in a line that lies across the bracket. The holes for the fasteners and the cable ties were omitted because the resulting stresses are very small and the additional detail in the math model is not necessary.

In addition, the radii at the inner and outer corners were not modeled. This is conservative because the model has more surface area and thus the g-loads produce larger body forces.

The fasteners were represented by constraints for the x, y, and z translational degrees of freedom at the two nodes representing the bolt locations. Since the model is free to rotate about a line through the fastener nodes, additional constrains were applied in the z-axis direction at two corners. These constraints represent the physical bearing of the plate against the VC support ring. A second model was used with these corner constraints moved inward on the bracket to the point where the bracket would bear against the VC support ring when the vertical loads are in the opposite direction.

Math Model 1 for contact constraint with force in -Z axis direction (constrain at outer edge):

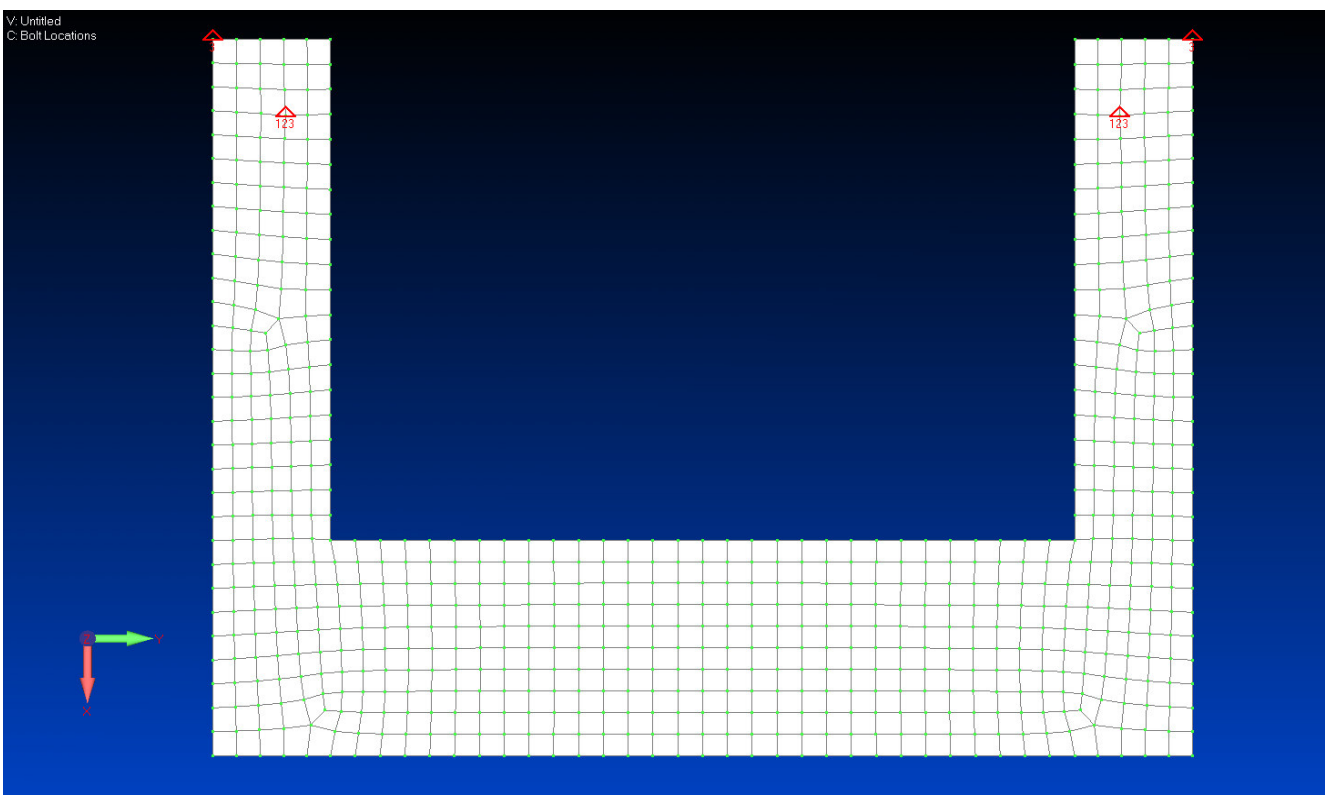

Math Model 2 for contact constraint with force in +Z axis direction (constraint moved inward):

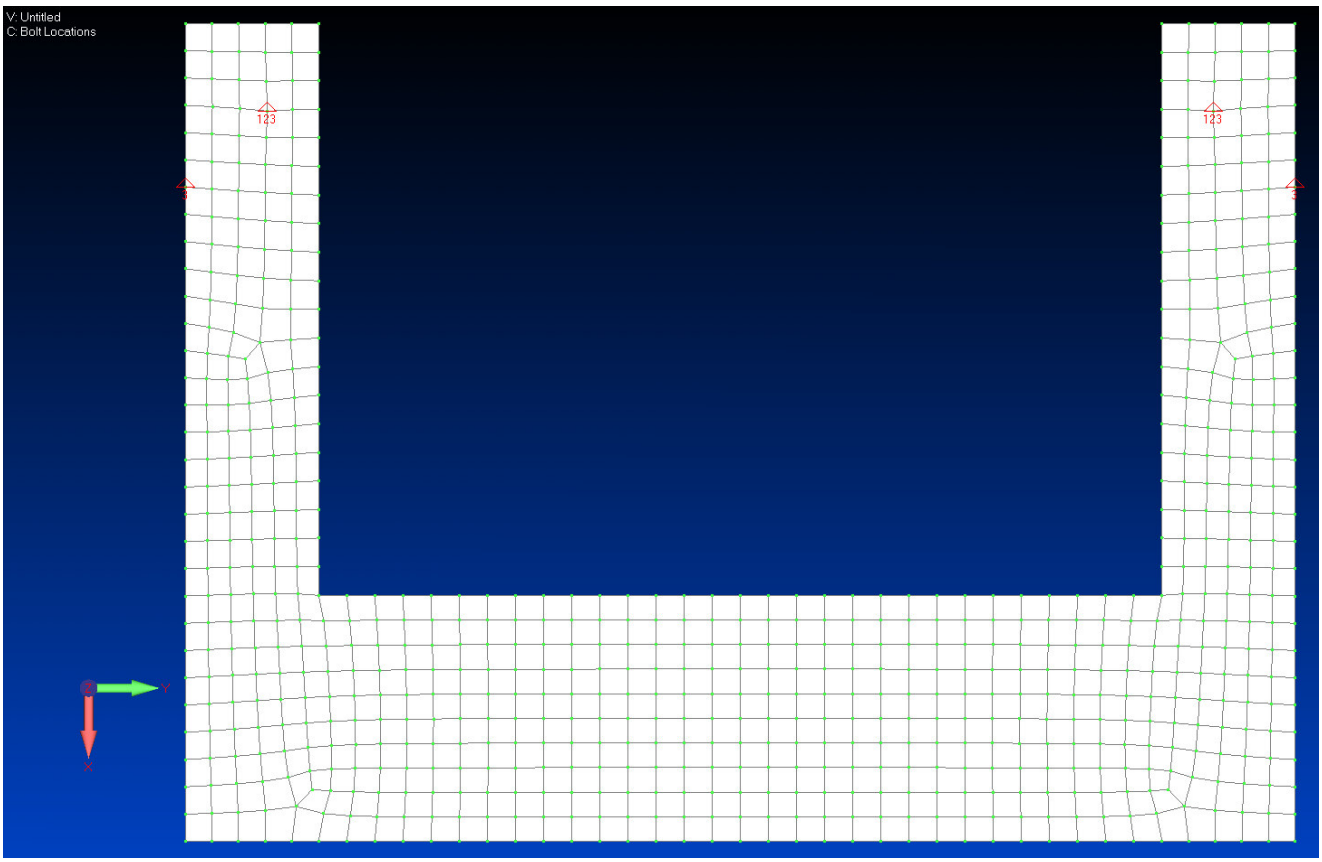

Stress Results for the Vacuum Case Cable Bracket

The stresses for all of the plate elements in the math model were recovered directly from the NASTRAN files and sorted in NASPOST. The peak stresses are summarized below:

σ_t = 3830. psi (maximum principal for ultimate)

σ_y = 3806. psi (maximum von Mises for yield)

σ_s = 2029. psi (maximum shear)

Note: Due to the symmetry of the bracket and the symmetry of the load cases, more than one load case produces the same maximum value in both models.

The following stress contour shows the maximum principle stress for the worst-case load condition (LC=18, Math Model 2).

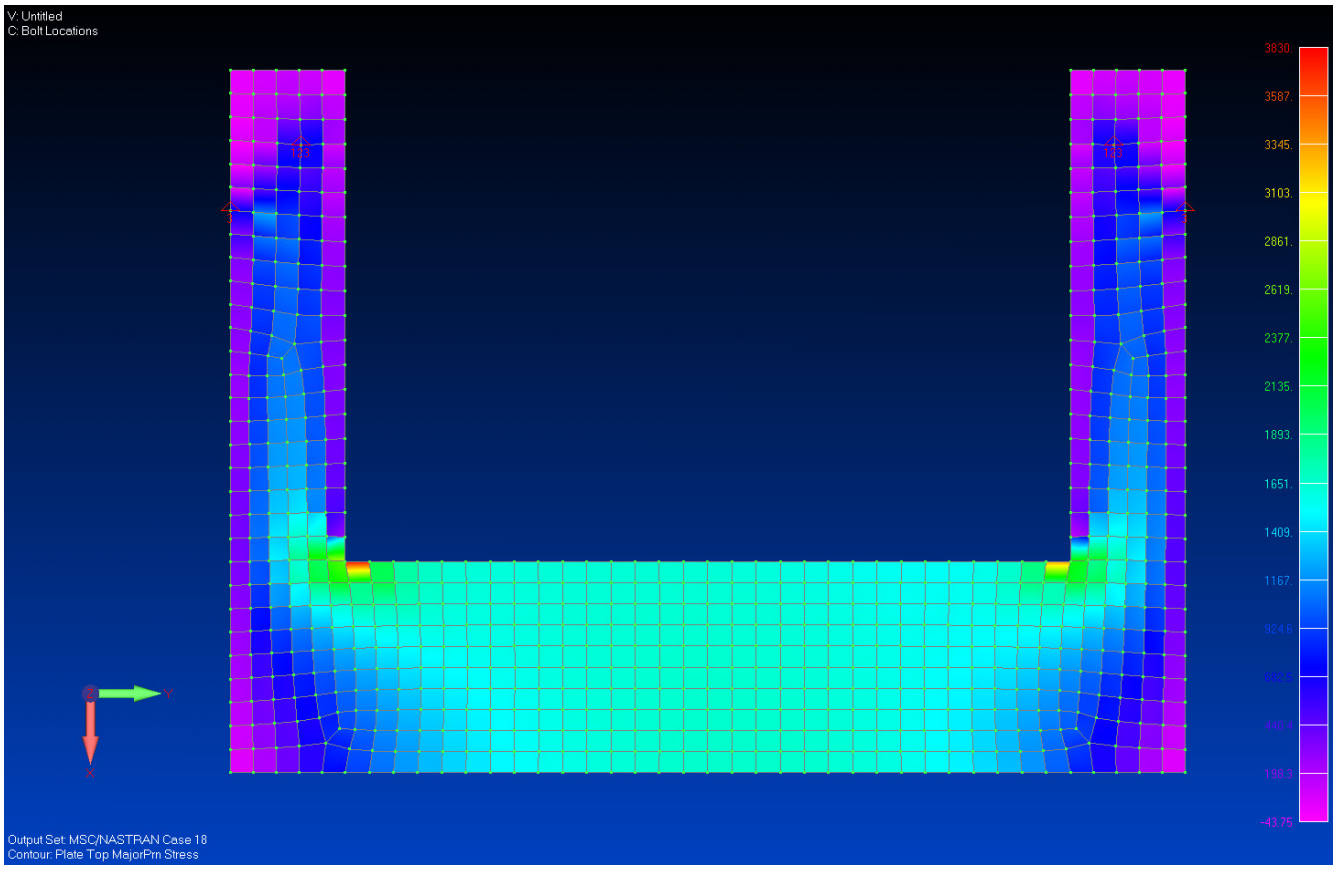

The following stress contour shows the maximum Von Mises stress for the worst-case load condition (LC=17, Math Model 2).

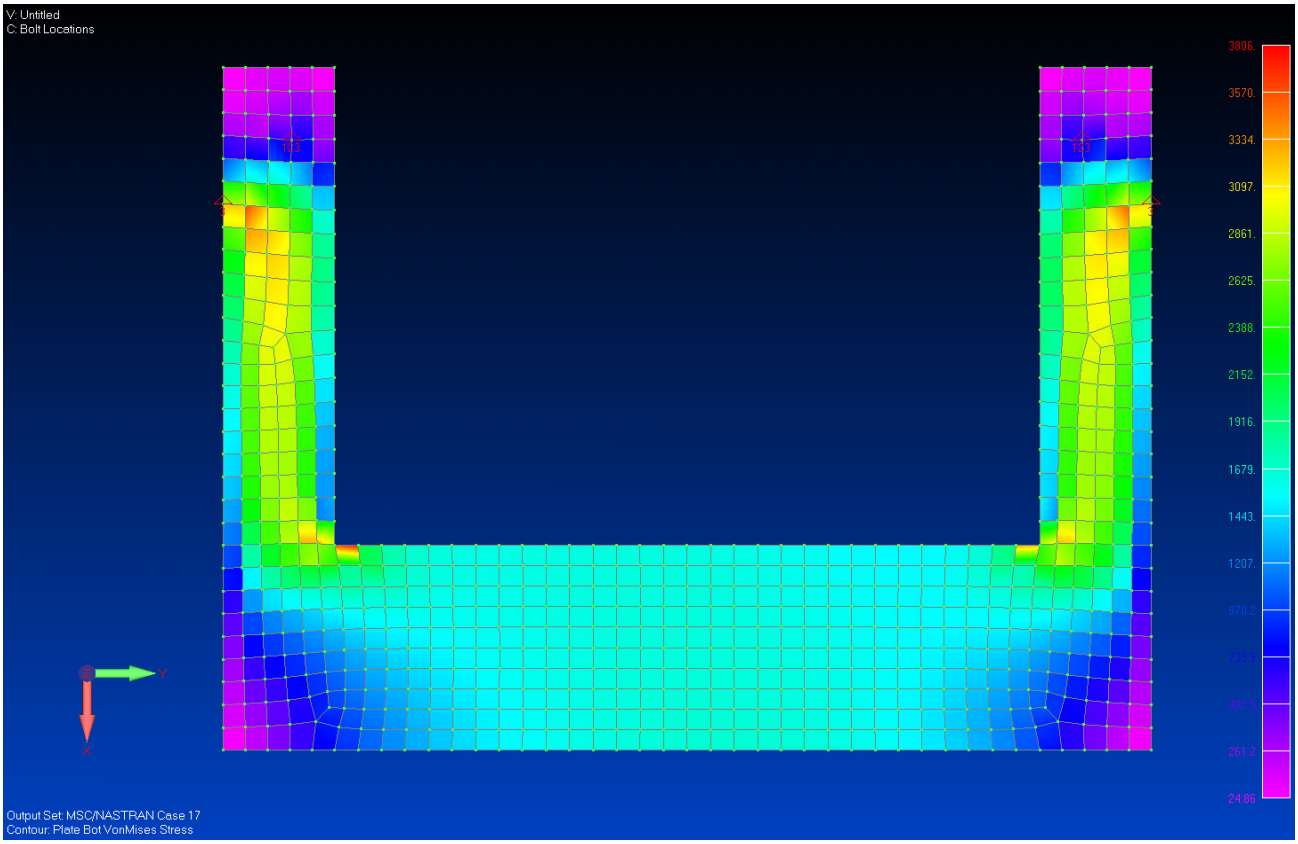

The following stress contour shows the maximum shear stress for the worst-case load condition (LC=17, Math Model 2).

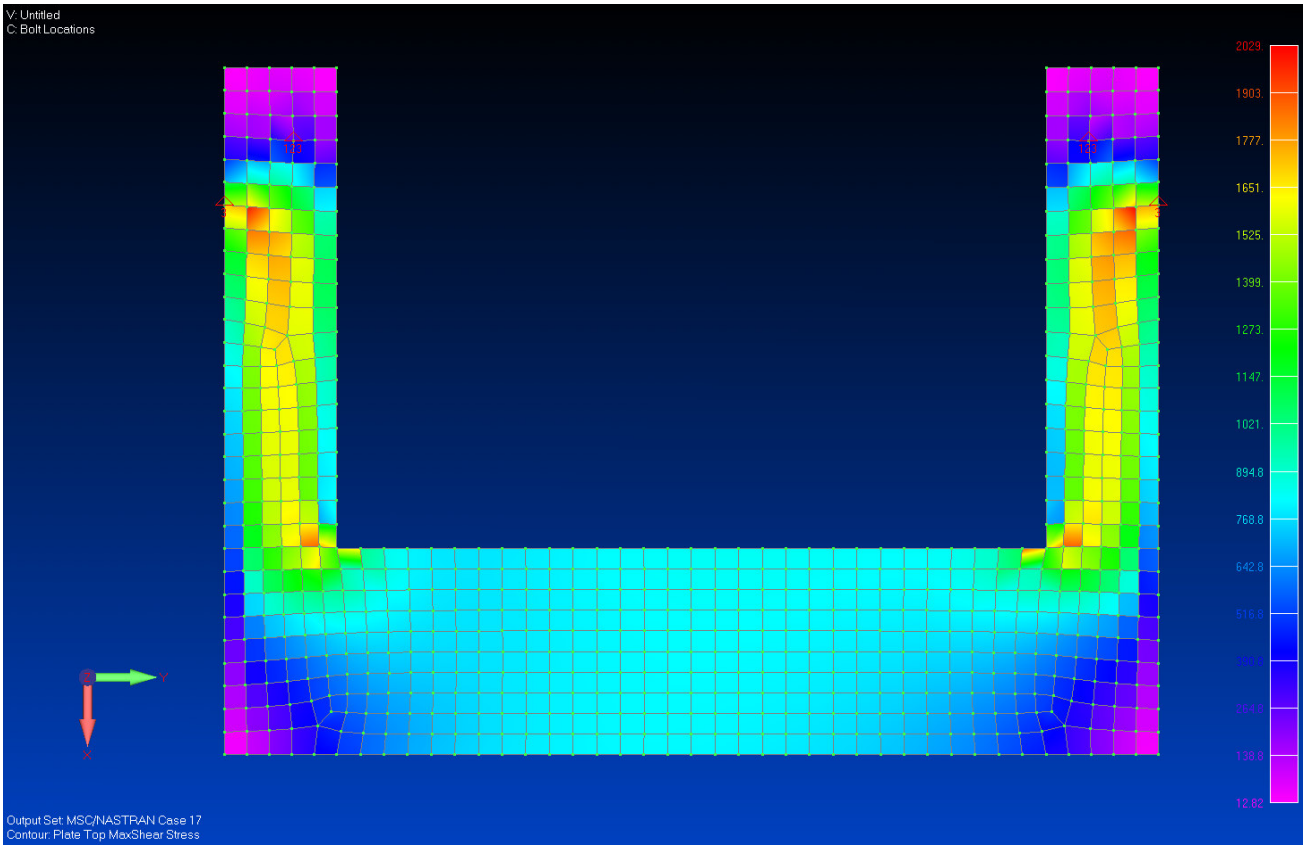

Structural Margins for the Vacuum Case Cable Bracket

The material allowables for Al 6061-T651plate (per Mil. Hdbk. 5J, January 31, 2003) are as follows:

$Ftu := 42000.0psi$ Tensile ultimate strength

$Fty := 35000.0psi$ Tensile yield strength

$Fsu := 27000.0psi$ Shear strength

Thermal reduction factor for 140 F:

$\beta ult := 0.96$ $\beta yld := 0.95$

Factors of safety for untested hardware:

$FSy := 1.25$ $FSu := 2.0$

Maximum stresses:

$ut := 3830.0$ $uy := 3806.0$ $s := 2029.0$

Margins of safety:

$$MSu := \frac{\beta ult \cdot Ftu}{ut \cdot FSu} \qquad MSu = 5.264\,psi$$

$$MSy := \frac{\beta yld \cdot Fty}{uy \cdot FSy} \qquad MSy = 6.989\,psi$$

$$MSs := \frac{\beta ult \cdot Fsu}{s \cdot FSu} \qquad MSs = 6.387\,psi$$

Fastener Forces for the Vacuum Case Cable Bracket

The forces in the fasteners that attach the bracket to the support ring were recovered directly from the NASTRAN static analysis as forces of single point constraint. The two constrain forces in the x and y axis directions were combined by RSS to compute the shear in the fastener. The constrain force in the z axis direction was used as the axial force in the fastener.

The maximum fastener forces are:

Faxial = 97.0 lb

Fshear = 24.0 lb

The moments acting on the bracket were reacted by force-couples at the two fastener locations; thus, it is assumed that the fasteners do not sustain any moments.

For the fastener fail safe analysis, the loads previously carried by two fasteners are assumed to now be carried by a single fastener. The moments that are induced on the bracket about the x and y axes are assumed to be reacted by contact of the bracket with the support ring. Any moments induced about the z axis will be reacted by friction between the bracket and the support ring induced by the bolt preload.

The maximum fastener forces for the fail safe analysis are:

Faxial = 194.0 lb

Fshear = 48.0 lb

Prepared By	Name	Date		File Name
	C.Lauritzen	07/01/08		vc-cable-bracket
Checked By	G. Reyes		**Engineering and Science Contract Group** *Structural Analysis Section*	Draw ing No. SDG39135877
Title	Vacuum Case Cable Bracket			

Case 1: Model 2A (2 fasteners)

Case ID	Element ID	Fx	Fy	Fz (Axial)	Shear
1	212	-10.503	-3.161	-24.029	10.968
2	212	-10.503	-3.161	24.029	10.968
3	212	-18.109	3.992	-24.029	18.544
4	212	-18.109	3.992	24.029	18.544
5	212	18.109	-3.992	-24.029	18.544
6	212	18.109	-3.992	24.029	18.544
7	212	10.503	3.161	-24.029	10.968
8	212	10.503	3.161	24.029	10.968
9	212	11.636	-14.202	-24.029	18.360
10	212	11.636	-14.202	24.029	18.360
11	212	-18.789	14.410	-24.029	23.679
12	212	-18.789	14.410	24.029	23.679
13	212	18.789	-14.410	-24.029	23.679
14	212	18.789	-14.410	24.029	23.679
15	212	-11.636	14.202	-24.029	18.360
16	212	-11.636	14.202	24.029	18.360
17	212	0.227	-3.473	-96.117	3.480
18	212	0.227	-3.473	96.117	3.480
19	212	-7.380	3.680	-96.117	8.246
20	212	-7.380	3.680	96.117	8.246
21	212	7.380	-3.680	-96.117	8.246
22	212	7.380	-3.680	96.117	8.246
23	212	-0.227	3.473	-96.117	3.480
24	212	-0.227	3.473	96.117	3.480
			Min	-96.117	3.480
			Max	96.117	23.679

Case ID	Element ID	Fx	Fy	Fz (Axial)	Shear
1	712	-18.109	-3.992	-24.029	18.544
2	712	-18.109	-3.992	24.029	18.544
3	712	-10.503	3.161	-24.029	10.968
4	712	-10.503	3.161	24.029	10.968
5	712	10.503	-3.161	-24.029	10.968
6	712	10.503	-3.161	24.029	10.968
7	712	18.109	3.992	-24.029	18.544
8	712	18.109	3.992	24.029	18.544
9	712	-18.789	-14.410	-24.029	23.679
10	712	-18.789	-14.410	24.029	23.679
11	712	11.636	14.202	-24.029	18.360
12	712	11.636	14.202	24.029	18.360
13	712	-11.636	-14.202	-24.029	18.360
14	712	-11.636	-14.202	24.029	18.360
15	712	18.789	14.410	-24.029	23.679
16	712	18.789	14.410	24.029	23.679
17	712	-7.380	-3.680	-96.117	8.246
18	712	-7.380	-3.680	96.117	8.246
19	712	0.227	3.473	-96.117	3.480
20	712	0.227	3.473	96.117	3.480
21	712	-0.227	-3.473	-96.117	3.480
22	712	-0.227	-3.473	96.117	3.480
23	712	7.380	3.680	-96.117	8.246
24	712	7.380	3.680	96.117	8.246
			Min	-96.117	3.480
			Max	96.117	23.679

Case 2: Model 2B (2 fasteners)

Case ID	Element ID	Fx	Fy	Fz (Axial)	Shear
1	212	-10.503	-3.161	20.023	10.968
2	212	-10.503	-3.161	-20.023	10.968
3	212	-18.109	3.992	20.023	18.544
4	212	-18.109	3.992	-20.023	18.544
5	212	18.109	-3.992	20.023	18.544
6	212	18.109	-3.992	-20.023	18.544
7	212	10.503	3.161	20.023	10.968
8	212	10.503	3.161	-20.023	10.968
9	212	11.636	-14.202	20.023	18.360
10	212	11.636	-14.202	-20.023	18.360
11	212	-18.789	14.410	20.023	23.679
12	212	-18.789	14.410	-20.023	23.679
13	212	18.789	-14.410	20.023	23.679
14	212	18.789	-14.410	-20.023	23.679
15	212	-11.636	14.202	20.023	18.360
16	212	-11.636	14.202	-20.023	18.360
17	212	0.227	-3.473	80.092	3.480
18	212	0.227	-3.473	-80.092	3.480
19	212	-7.380	3.680	80.092	8.246
20	212	-7.380	3.680	-80.092	8.246
21	212	7.380	-3.680	80.092	8.246
22	212	7.380	-3.680	-80.092	8.246
23	212	-0.227	3.473	80.092	3.480
24	212	-0.227	3.473	-80.092	3.480
			Min	-80.092	3.480
			Max	80.092	23.679

Case ID	Element ID	Fx	Fy	Fz (Axial)	Shear
1	712	-18.109	-3.992	20.023	18.544
2	712	-18.109	-3.992	-20.023	18.544
3	712	-10.503	3.161	20.023	10.968
4	712	-10.503	3.161	-20.023	10.968
5	712	10.503	-3.161	20.023	10.968
6	712	10.503	-3.161	-20.023	10.968
7	712	18.109	3.992	20.023	18.544
8	712	18.109	3.992	-20.023	18.544
9	712	-18.789	-14.410	20.023	23.679
10	712	-18.789	-14.410	-20.023	23.679
11	712	11.636	14.202	20.023	18.360
12	712	11.636	14.202	-20.023	18.360
13	712	-11.636	-14.202	20.023	18.360
14	712	-11.636	-14.202	-20.023	18.360
15	712	18.789	14.410	20.023	23.679
16	712	18.789	14.410	-20.023	23.679
17	712	-7.380	-3.680	80.092	8.246
18	712	-7.380	-3.680	-80.092	8.246
19	712	0.227	3.473	80.092	3.480
20	712	0.227	3.473	-80.092	3.480
21	712	-0.227	-3.473	80.092	3.480
22	712	-0.227	-3.473	-80.092	3.480
23	712	7.380	3.680	80.092	8.246
24	712	7.380	3.680	-80.092	8.246
			Min	-80.092	3.480
			Max	80.092	23.679

CHECK BOLTS (NAS1351N3-24 0.19"-32 x 1.50 L Material-A-286), Nut NAS1291C3M, Washer NAS1149E 0363R

Flange 1
Part number: Lower Support Ring/Outer Cylinder SDG39135785/SDG39135779
Material: Al Alloy 7050-T7451

Flange 2
Part number: Integration Cable Bracket SDG39135877
Material: Al Alloy 6061-T651

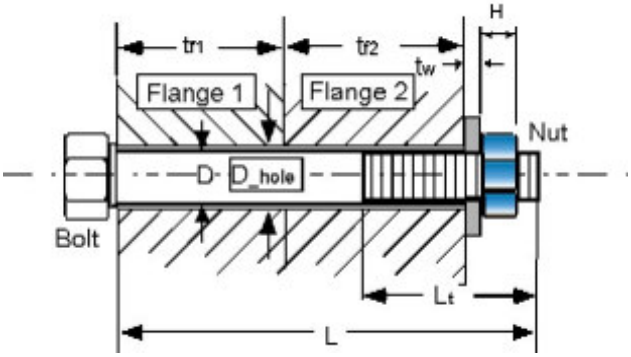

Loads

Applied tensile load $P := 97.0lbf$

Applied shear load $V := 24.0lbf$

Applied bending moment $M := 0.0in \cdot lbf$

Factors of Safety

Ultimate $SFu := 2.0$ Yield $SFy := 1.25$

Joint Separation $SFsep := 1.2$ Fitting factor $FF := 1.15$

Temperature data

Assembly $Temp_initial := 70 \cdot deg$

Maximum $Temp_max := 120 \cdot deg$

Minimum $Temp_min := -200 \cdot deg$

Bolt and Nut Data

Nominal diameter of bolt $D := .190 \cdot in$

Number of threads/inch $Nt := 32 \cdot \frac{1}{in}$

Total length of bolt $L := 1.50 \cdot in$

Height of nut $H := 0.154 \cdot in$

Threaded length $Lt := 0.875 \cdot in$

(If bolt is fully threaded, input Lt = L)

This file uses the calculations shown in \\escfil02\2i11_mathcad\8307_bolts\thread_data.mcd

Tue Feb 15 10:54:02 AM 2005

Washer Data

Thickness of washers $tw := 0.063 \cdot in$

Outer Diameter of washer $Dw := 0.438in$

Inner Diameter of washer $Dwi := 0.203 \cdot in$

Bolt head dia. across flats $dw := 0.303 \cdot in$ (used only if there is no washer)

Note: If there is no washer tw, Dw and Dwi should be zero

Flange data

Thickness of flange 1 $tf1 := 0.75 \cdot in$

Thickness of flange 2 $tf2 := 0.38in$

Diameter of hole $D_hole := 0.213 \cdot in$

Prepared By	Name C.Lauritzen	Date 07/01/08	Engineering and Science Contract Group *Structural Analysis Section*	File Name vc-cable-bracket-bolts
Checked By	G. Reyes			Draw ing No. SDG39135877
Title	Vacuum Case Cable Bracket			

Material Property Data

Bolt

Temperature correction factor for bolt strength ultimate. $TSu_bolt := 0.98$ Yield $TSy_bolt := 0.98$

Bolt ultimate tensile allowable stress $Ftu_bolt := 160000 \cdot psi$

Bolt ultimate shear allowable stress $Fsu_bolt := 0.6 \cdot Ftu_bolt$

Bolt yield Tensile allowable stress $Fty_bolt := 120000 \cdot psi$

Temperature correction factor for bolt modulus $TE_bolt := 0.99$

Modulus of elasticity of bolt $E_bolt := \left(29.1 \cdot 10^{6} \cdot psi\right)$ Thermal coefficient for bolt $\beta_bolt_hot := 9.1 \cdot 10^{-6} \cdot \frac{\frac{in}{in}}{deg}$

Nut

Temperature correction factor for nut strength $TS_nut := 0.94$ $\beta_bolt_cold := 7.8 \cdot 10^{-6} \cdot \frac{\frac{in}{in}}{deg}$

Ultimate tensile allowable stress $Ftu_nut := 160000 \cdot psi$

Ultimate Shear allowable stress: $Fsu_nut := 0.6 \cdot Ftu_nut$

Ultimate axial strength of nut $Ptu_nut := 2460 \cdot lbf$ (Ref. NAS1291, page 2)

Washer

Temperature correction factor for washer modulus $TE_washer := 1.0$

Modulus of elasticity of washer: $E_washer := \left(29.1 \cdot 10^{6} \cdot psi\right)$

Flanges

Stiffness of the joint depends upon number of members in the grip of the fasteners, Modulus of elasticity of these members, and diameters of the bolt and the washer.

Temperature correction factor for flange 1 $Tf1E := 1.0$ (modulus)

Temperature correction factor for flange 2 $Tf2E := 1.0$

Modulus of elasticity for the parts in the joint $E_flange1 := \left(10.6 \cdot 10^{6} \cdot psi\right)$ $E_flange2 := \left(10.1 \cdot 10^{6} \cdot psi\right)$

Coefficient of thermal expansion for flanges $\beta_flange1_hot := 12.4 \cdot 10^{-6} \cdot \frac{\frac{in}{in}}{deg}$ $\beta_flange2_hot := 12.75 \cdot 10^{-6} \cdot \frac{\frac{in}{in}}{deg}$

$\beta_flange1_cold := 12.1 \cdot 10^{-6} \cdot \frac{\frac{in}{in}}{deg}$ $\beta_flange2_cold := 11.3 \cdot 10^{-6} \cdot \frac{\frac{in}{in}}{deg}$

Torque/Preload data

Maximum torque $Tmax := 40.6 \cdot in \cdot lbf$ Loading plane factor $n := 0.5$

Minimum torque $Tmin := 34.5 in \cdot lbf$ Preload Uncertainty $u := 0.25$

Torque coefficient $k := 0.15$

This file uses the calculations shown in \\escfil02\2i11_mathcad\8307_bolts\bolt_stiffness_nut_RevC

Bolt Load data

Bolt/joint stiffness factor	$= 0.164$	Preload due to temperature	$Pthr_pos = 90.2\,lbf$
Max. preload	$PLDmax = 1870.9\,lbf$		$Pthr_neg = -574.7\,lbf$
Min. preload	$PLDmin = 244.2\,lbf$	Uncertainty factor	$u = 0.25$
Joint separation load	$Psep = 116.4\,lbf$	Torque coefficient	$k = 0.15$
Max. load on the bolt(ultimate)	$Pb = 1889.2\,lbf$	Loading plane factor	$n = 0.5$
Max. load on the bolt(yield)	$Pby = 1882.4\,lbf$	Thread pullout strength required to develop full strength of bolt	$PAs = 3621.8\,lbf$
Bolt ultimate tensile strength	$PAt = 2312.4\,lbf$	Nut ultimate tensile strength	$Ptu_nut = 2312.4\,lbf$

Length_check = "Bolt length is sufficient"

Summary of Margins for bolt:

Joint separation	$MS_1 = 0.99$	Direct Thread shear Ultimate	$MS_6 = 15.23$
Direct Tension Ultimate	$MS_2 = 9.36$	Total Thread shear Ultimate	$MS_7 = 0.92$
Direct Tension Yield	$MS_3 = 15.23$	Shear Ultimate	$MS_8 = 28.88$
Total Tension Ultimate	$MS_4 = 0.22$	Bending Ultimate	$MS_9 = 10$
Total Tension Yield	$MS_5 = 0.2$	Combined shear, tension and bending ultimate	$MS_{10} = 0.22$

Determination of the smallest margin of safety for the bolt, and the failure mode:

$$MSbolt := \min(MS)$$

$MSbolt = 0.2$ Failure_Mode = "Total Tension Yield"

Fail-safe Analysis **(Conservatively, the loads were doubled to perform fail-safe analysis)**

Fail-safe Loads

Applied tensile load $P_FS := 194 \cdot lbf$

Applied shear load $V_FS := 48 \cdot lbf$

Applied bending moment $M_FS := 0 \cdot in \cdot lbf$

Fail-safe Factors of Safety

Ultimate $SFu_FS := 1.0$

Joint Separation $SFsep_FS := 1.0$

This file uses the calculations shown in \\escfil02\2i11_mathcad\8307_bolts\bolt_stiffness_nut_FS_RevC

Mon Feb 14 12:37:28 2005

Bolt Fail-safe Load data

Joint separation load $Psep_FS = 194\,lbf$

Max. load on the bolt(ultimate) $Pb_FS = 1889.2\,lbf$

Summary of fail-safe Margins for bolt:

Joint separation	$MS_FS_1 = 0.19$	Total Thread shear Ultimate	$MS_FS_5 = 0.92$
Direct Tension Ultimate	$MS_FS_2 = 9.36$	Shear Ultimate	$MS_FS_6 = 28.88$
Total Tension Ultimate	$MS_FS_3 = 0.22$	Bending Ultimate	$MS_FS_7 = 10$
Direct Thread shear Ultimate	$MS_FS_4 = 15.23$	Combined shear, tension and bending ultimate	$MS_FS_8 = 0.22$

Determination of the smallest fail-safe margin of safety for the bolt, and the failure mode:

$$MSbolt_FS := \min(MS_FS)$$

$MSbolt_FS = 0.19$ $Failure_Mode_FS = \text{"Joint Separation"}$