Mission ISS-ULF6 Orbiter/ISS On-Orbit Interface Requirements

Interface Control Document

Basic
April 6, 2009

National Aeronautics and
Space Administration

Lyndon B. Johnson Space Center
Houston, Texas

CHANGE LOG

Revision	Change Number	Approval Authority	Approval Date	Item(s) Affected
Basic		ICD-A-21507-OOR-0001	04/06/09	All
	1	ICD-A-21507-OOR-0002	02/22/10	(P) S.2.1 (P) S.14.0 thru S.14.6 Apx. A
	2	ICD-A-21507-OOR-0003	04/19/10	(S) S.2.1 (S) S.10.0.5 Apx. A
	3	ICD-A-21507-OOR-0004	11/30/10	(T) S.3.0.1.5-1 (P) S.3.0.1.10.1 (T) S.3.0.1.10.5-1 (F) S.3.0.1.2-1 (F) S.3.0.1.10.2-1 (F) S.3.0.1.10.3-1 (F) S.3.0.1.10.3-2 (F) S.3.0.1.10.4-1 (All sheets) Apx. A
	4	ICD-A-21507-OOR-0005	03/21/11	(S) S.20.1 Apx. A
	5	ICD-A-21507-OOR-0006	04/20/11	(S) S.2.1 (S) S.4.0 thru (F) S.4.3.2.1-2 (S) S.11.0 thru S.11.2.2.2 Apx. A
	6	ICD-A-21507-OOR-0007	04/20/11	(S) S.2.1 (S) S.10.0.5

CONTENTS

Section		Page
S.1.0	SCOPE	S1-1
S.1.1	Purpose	S1-1
S.1.2	Definition	S1-1
S.1.3	Organization of Document	S1-1
S.1.4	Effectivity	S1-1
S.1.5	Change Policy	S1-1
S.1.6	Documentation	S1-1
S.1.6.1	Mission Unique	S1-1
S.1.6.2	Relationship to MIP	S1-2
S.1.6.3	Waivers, Deviations and Exceedances	S1-2
S.1.6.4	Paragraph Dispositioning	S1-2
S.2.0	DOCUMENTS	S2-1
S.2.1	Applicable Documents	S2-1
S.2.2	Reference Documents	S2-3
S.3.0	ORBITER/STATION PHYSICAL INTERFACES	S3-1
S.3.0.1	Mission-unique Configuration Definition	S3-1
S.3.0.1.1	Orbiter and Station Coordinate System	S3-1
S.3.0.1.2	Docking Orientation	S3-1
S.3.0.1.3	ISS Tracking Light	S3-1
S.3.0.1.4	ISS Thermal Control System (TCS) Targets	S3-1
S.3.0.1.5	Orbiter and ISS Cameras	S3-1
S.3.0.1.6	ISS Centerline Docking Target	S3-1

CONTENTS

Section		Page
S.3.0.1.7	Centerline Berthing Camera and Target	S3-1
S.3.0.1.8	Moding Indicator	S3-1
S.3.0.1.9	ISS Space Vision System (SVS) Targets	S3-1
S.3.0.1.10	Vehicle Configurations	S3-2
S.3.0.1.10.1	Shuttle Proximity Operations Approach Configuration	S3-2
S.3.0.1.10.2	ISS Proximity Operations Approach Configuration	S3-2
S.3.0.1.10.3	ISS and Shuttle Mated Assembly Configurations	S3-2
S.3.0.1.10.4	ISS Undocked Separation Configuration	S3-2
S.3.0.1.10.5	ISS Visiting Vehicle Docking Ports	S3-2
S.3.0.2	Mission-unique Mated Interfaces	S3-2
S.3.0.2.1	ISS Androgynous Peripheral Assembly System (APAS)	S3-2
S.3.0.2.2	Fluid Interfaces	S3-2
S.3.1	Configuration Definition	S3-13
S.3.2	Mated Interfaces	S3-13
S.3.3	Mated Orbiter/Station Clearance Post Shuttle Docking	S3-13
S.4.0	STRUCTURAL LOADS AND VEHICLE DYNAMICS	S4-1
S.4.1	Limit Load Constraints	S4-1
S.4.1.1	ISS Limit Load Constraints	S4-1
S.4.1.2	Shuttle Limit Load Constraints	S4-1
S.4.1.3	Manipulator Load Constraints	S4-1
S.4.1.3.1	Strela and Power Data Grapple Fixture (PDGF) Limit Load Constraints	S4-1

CONTENTS

Section		Page
S.4.1.3.2	ORU Translation Device (OTD) Load Constraints	S4-1
S.4.1.4	Fatigue Load Spectra Constraints	S4-1
S.4.2	Structural Loads Requirements	S4-20
S.4.2.1	Shuttle Approach and Separation Plume Impingement Loads	S4-20
S.4.2.1.1	ISS Configurations and Models	S4-20
S.4.2.1.2	Plume Impingement Loads Analysis Criteria	S4-20
S.4.2.1.2.1	Proximity Operations Shuttle Jet History Databases	S4-20
S.4.2.1.2.2	Analysis Uncertainties	S4-20
S.4.2.1.2.3	Plume Impingement Forcing Function Description	S4-20
S.4.2.1.2.4	Loads and Pressures Calculations	S4-20
S.4.2.1.2.5	Load Combinations	S4-21
S.4.2.1.2.6	Load Spectra	S4-21
S.4.2.1.3	ISS Limit Load Constraints	S4-21
S.4.2.2	ISS/Shuttle Docking Loads	S4-21
S.4.2.2.1	ISS Math Models and Damping	S4-21
S.4.2.2.2	Shuttle Math Models	S4-21
S.4.2.2.3	Docking Forcing Functions	S4-21
S.4.2.2.4	Uncertainties	S4-21
S.4.2.2.5	Loads Calculations	S4-21
S.4.2.2.6	Loading Combinations	S4-21
S.4.2.2.7	Load Spectra	S4-21
S.4.2.2.8	ISS Limit Load Constraints	S4-21

CONTENTS

Section		Page
S.4.2.2.9	Shuttle Limit Load Constraints	S4-21
S.4.2.3	Mated Flight Loads	S4-21
S.4.2.3.1	Shuttle/ISS Configurations and Models	S4-22
S.4.2.3.1.1	Shuttle/ISS Dynamics Model Uncertainties for Shuttle Flight Control	S4-22
S.4.2.3.1.2	Shuttle/ISS Dynamics Model Uncertainties for ISS Flight Control	S4-22
S.4.2.3.2	Mated Attitude Hold and Maneuvering Loads Criteria	S4-22
S.4.2.3.2.1	Shuttle Reaction Control System (RCS) Forcing Functions	S4-22
S.4.2.3.2.1.1	Attitude Hold and Maneuvering	S4-22
S.4.2.3.2.1.2	Shuttle Reboost of ISS	S4-23
S.4.2.3.2.1.3	Reserved	S4-24
S.4.2.3.2.1.4	Reserved	S4-24
S.4.2.3.2.1.5	Shuttle RCS Jet Failed-On	S4-24
S.4.2.3.2.2	Shuttle RCS Plume Impingement Loading	S4-25
S.4.2.3.2.3	Shuttle RCS Uncertainty Factors	S4-25
S.4.2.3.2.4	ISS Attitude Control System (ACS) Control	S4-25
S.4.2.3.2.4.1	Forcing Functions During Control Using ISS Russian System (RS) Motion Control System (MCS) Jets	S4-25
S.4.2.3.2.4.2	Reserved	S4-25
S.4.2.3.2.4.3	ISS Conrol Moment Gyro (CMG) Disturbance Torques for Loads Assessments	S4-25
S.4.2.3.2.4.3.1	ISS CMG Spin-up or Spin-down	S4-25
S.4.2.3.2.4.3.2	ISS CMG Control with Thrusters Inhibited	S4-25

CONTENTS

Section		Page
S.4.2.3.2.4.4	ISS CMG Desaturation Using ISS Jets	S4-25
S.4.2.3.2.4.5	ISS CMG US Thrusters Only (USTO)	S4-26
S.4.2.3.2.4.6	ISS ACS Uncertainty Factors	S4-26
S.4.2.3.2.4.7	ISS CMG Attitude Control Contingency Deactivation	S4-26
S.4.2.3.2.5	Loads Due to Shuttle Venting	S4-26
S.4.2.3.2.6	Loads Due to ISS Venting	S4-26
S.4.2.3.3	Intravehicular Activity (IVA) and EVA Loading	S4-26
S.4.2.3.3.1	Forcing Functions	S4-26
S.4.2.3.3.2	Uncertainties	S4-26
S.4.2.3.3.3	Reserved	S4-26
S.4.2.3.4	SRMS and SSRMS Loads	S4-26
S.4.2.3.4.1	SRMS Berthing	S4-26
S.4.2.3.4.2	SRMS Handling Forcing Functions	S4-26
S.4.2.3.4.3	SSRMS Berthing	S4-26
S.4.2.3.4.4	SSRMS Handling Forcing Functions	S4-26
S.4.2.3.4.5	Uncertainties	S4-27
S.4.2.3.5	Docking and Undocking of Soyuz/Progress Vehicles	S4-27
S.4.2.3.5.1	Soyuz/Progress Vehicle Docking Loads During Mated Flight	S4-27
S.4.2.3.5.2	Soyuz Vehicle Undocking Loads During Mated Flight	S4-27
S.4.2.3.5.3	Soyuz/Progress Clearances from Shuttle During Docking or Undocking	S4-28
S.4.2.3.5.4	Russian Vehicle Approach and Separation Plume Impingement Trajectory Inputs	S4-28

CONTENTS

Section		Page
S.4.2.3.6	Loading Combinations	S4-28
S.4.2.3.7	Load Spectra	S4-28
S.4.2.3.8	Limit Load Constraints	S4-28
S.4.2.3.9	Operational Constraints	S4-28
S.4.2.3.9.1	General Operational Constraints	S4-28
S.4.2.3.9.2	IVA/EVA Constraints	S4-29
S.4.2.3.9.2.1	General IVA Constraints	S4-29
S.4.2.3.9.2.2	General EVA Constraints	S4-30
S.4.2.3.9.2.3	96 Bolt Separation EVA Constraints	S4-31
S.4.2.3.9.2.4	Only Six Hooks Latched at the PMA/APAS Interface Constraints	S4-32
S.4.2.3.9.3	Reserved	S4-32
S.4.2.3.9.4	Reserved	S4-32
S.4.2.3.9.5	Reserved	S4-32
S.4.2.3.9.6	IEA Constraints	S4-32
S.4.2.3.9.7	SARJ Constraints	S4-32
S.4.2.3.9.8	TRRJ Constraints	S4-33
S.4.2.4	Shuttle Undocking Loads	S4-33
S.4.2.4.1	ISS and Shuttle Math Model Data	S4-33
S.4.2.4.2	Uncertainty Factor	S4-33
S.4.2.4.3	Shuttle Undocking Loading Criteria	S4-34
S.4.2.4.3.1	Undocking with Spring Loaded Pushers	S4-34
S.4.2.4.3.2	Contingency Undocking with Pyrotechnics	S4-34

CONTENTS

Section		Page
S.4.2.4.3.3	Contingency Undocking with 96 Bolt EVA	S4-34
S.4.2.4.4	Loading Combinations	S4-34
S.4.2.4.5	Limit Load Constraints	S4-34
S.4.3	ORBITER AND ISS MATH MODELS	S4-75
S.4.3.1	Orbiter Structural Math Models	S4-75
S.4.3.1.1	Orbiter Beam Element Model	S4-75
S.4.3.1.2	Orbiter APAS Stiffness Model	S4-75
S.4.3.1.3	Reserved	S4-75
S.4.3.1.4	Orbiter ODS Flexure	S4-75
S.4.3.2	ISS Structural Math Models	S4-75
S.4.3.2.1	Surface Geometry Math Models	S4-75
S.4.3.2.2	Structural Math Models	S4-75
S.4.3.2.2.1	US Solar Array Torsion Frequency When Unlocked	S4-75
S.4.3.2.3	Government Furnished Equipment (GFE)/ISS Component Stiffness Models	S4-75
S.4.3.2.3.1	APFR Stiffness	S4-75
S.5.0	RESERVED	S5-1
S.6.0	ENVIRONMENTAL CONTROL INTERFACES	S6-1
S.6.1	Passive Thermal Control (PTC)	S6-1
S.6.2	Environmental Control	S6-1
S.6.3	Environmental Control and Life Support (ECLS) Resource Transfer	S6-1
S.7.0	ELECTRICAL POWER INTERFACES	S7-1

CONTENTS

Section		Page
S.7.0.1	Mission-unique Interfaces	S7-1
S.7.1	Electrical Power Accommodations	S7-1
S.7.2	Low Voltage Power	S7-1
S.7.3	High Voltage Power	S7-1
S.8.0	AVIONICS INTERFACES	S8-1
S.8.0.1	Mission-unique Interfaces	S8-1
S.8.1	Radio Frequency (RF) Interfaces	S8-1
S.8.2	1553B Data Bus	S8-1
S.8.3	Audio Central Control Network Interface	S8-1
S.8.4	Closed Circuit Television (CCTV) Video Control Unit Interface	S8-1
S.8.5	Orbiter/ISS Functional Block Diagram	S8-1
S.8.6	Portable Electrical Equipment	S8-1
S.9.0	ON-ORBIT STATION SOFTWARE INTERFACES	S9-1
S.9.0.1	Mission-specific Interface Requirements	S9-1
S.9.0.1.1	Computer Systems Interfaces	S9-1
S.9.0.1.1.1	Guidance, Navigation, and Control (GNC) Computer Interface	S9-1
S.9.0.1.1.1.1	OIU Outputs to GNC Computer	S9-1
S.9.0.1.1.1.2	OIU Inputs from GNC Computer	S9-1
S.9.0.1.1.2	Space-to-Space Communication System (SSCS) Interface	S9-1
S.9.0.1.1.2.1	OIU Outputs to SSCS	S9-1
S.9.0.1.1.2.2	OIU Inputs from the SSCS	S9-2
S.9.0.1.1.3	Alpha Magnetic Spectrometer – 02 (AMS-02) Computer Interface	S9-2

CONTENTS

Section		Page
S.9.0.1.1.3.1	OIU Outputs to AMS-02	S9-2
S.9.0.1.1.3.2	OIU Inputs from the AMS-02	S9-2
S.9.0.1.2	Reserved	S9-2
S.9.0.1.3	Frame Structure	S9-2
S.9.0.1.4	Commands Through the Payload Signal Processor (PSP)	S9-2
S.9.0.1.5	Telemetry Data Through the Payload Data Interleaver (PDI)	S9-2
S.9.0.1.6	Remote Terminal Address	S9-3
S.9.0.1.7	Subaddress Utilization	S9-3
S.9.1	Software Overview	S9-10
S.9.2	Reserved	S9-10
S.9.3	On-orbit Orbiter-Station Flight Phase Applicability	S9-10
S.9.4	Software Constraints/Communications Conventions	S9-10
S.10.0	INDUCED ENVIRONMENTS	S10-1
S.10.0.1	Mission-unique Interfaces	S10-1
S.10.0.1.1	Orbiter Intentional Radiated Emissions	S10-1
S.10.0.1.2	ISS Intentional Radiated Emissions	S10-1
S.10.0.2	Orbiter ODS/Airlock Venting Environments for Extravehicular Activity (EVA) or Docking	S10-1
S.10.0.2.1	ODS/External Airlock Depressurization Vent Pressure Environment	S10-1
S.10.0.2.2	Docking Base (Vestibule) Depressurization Venting Pressure Environment	S10-1
S.10.0.2.3	Hatch Equalization Valve Depressurization Venting Environment	S10-1
S.10.0.3	ISS On-orbit Venting	S10-1

CONTENTS

Section		Page
S.10.0.4	Orbiter Sources of Contamination and Venting Environments	S10-1
S.10.0.5	Other Vehicle Sources of Contamination and Venting Environments	S10-1
S.10.1	Interface Wiring Classifications	S10-2
S.10.2	Signal Interface	S10-2
S.10.3	Electrical Bonding	S10-2
S.10.4	Power Circuit/Signal Return Isolation and Grounding	S10-2
S.10.5	Radiated Emissions Environments	S10-2
S.10.6	Conducted Emissions Environment	S10-2
S.10.7	On-orbit Laser Emissions	S10-2
S.10.8	Reserved	S10-2
S.10.9	Venting Environments and Contamination	S10-2
S.11.0	OTHER Proximity Operations and Mated Operations and Vehicle Control Systems	S11-1
S.11.1	Joint Mission Operations and Vehicle Dynamics Requirements	S11-1
S.11.1.1	Rendezvous Terminal Phase	S11-1
S.11.1.1.1	Shuttle	S11-1
S.11.1.1.2	ISS	S11-1
S.11.1.2	Approach Phase	S11-1
S.11.1.2.1	Shuttle	S11-1
S.11.1.2.2	ISS	S11-1
S.11.1.3	Docking Phase	S11-2
S.11.1.3.1	Shuttle	S11-3

CONTENTS

Section		Page
S.11.1.3.2	ISS	S11-3
S.11.1.3.3	Shuttle/ISS Clearance Requirements	S11-3
S.11.1.4	Shuttle/ISS Mated Flight Phase	S11-3
S.11.1.4.1	Requirements for Mated Vehicle Attitude Control	S11-3
S.11.1.4.1.1	Requirements Determined by the ISS System	S11-3
S.11.1.4.1.2	Requirements for Pre-Undocking	S11-3
S.11.1.4.2	Performance of Mated Stack Attitude Control	S11-3
S.11.1.4.2.1	Shuttle Performance of Mated Stack Attitude Control	S11-3
S.11.1.4.2.2	ISS Performance of Mated Stack Attitude Control	S11-3
S.11.1.4.2.3	Shuttle Reboost of ISS	S11-4
S.11.1.4.2.3.1	Shuttle	S11-4
S.11.1.4.2.3.2	ISS	S11-4
S.11.1.4.2.4	ISS Performance of Mated Stack Reboost	S11-4
S.11.1.4.3	Constraints for Mated Stack Attitude Control	S11-4
S.11.1.4.3.1	Shuttle Constraints	S11-4
S.11.1.4.3.2	ISS Constraints	S11-4
S.11.1.4.3.3	ISS/Shuttle Attitude Control Transition Constraints	S11-4
S.11.1.4.4	Shuttle Control System Overview	S11-8
S.11.1.4.4.1	Shuttle Orbital Flight Control System Description	S11-8
S.11.1.4.4.1.1	Standard PRCS	S11-8
S.11.1.4.4.1.2	ALT PRCS	S11-8
S.11.1.4.4.1.3	VRCS	S11-8

CONTENTS

Section		Page
S.11.1.4.5	ISS MCS Overview	S11-8
S.11.1.4.5.1	ISS RS MCS General Description	S11-8
S.11.1.4.5.2	ISS USOS ACS General Description	S11-8
S.11.1.5	Undocking and Separation Phase	S11-8
S.11.1.5.1	Shuttle	S11-8
S.11.1.5.2	ISS	S11-8
S.11.1.5.3	Shuttle/ISS Clearance Requirements	S11-9
S.11.2	Plume Environments	S11-9
S.11.2.1	Orbiter Plume Characteristics	S11-9
S.11.2.1.1	Plume Dynamic Pressure Calculation	S11-9
S.11.2.1.1.1	Calculation of Source Flow Equation Constants	S11-9
S.11.2.1.1.2	Dual Jet Model	S11-9
S.11.2.1.2	Force Coefficient Calculations	S11-9
S.11.2.1.2.1	Methodology	S11-9
S.11.2.1.2.1.1	Approach	S11-9
S.11.2.1.2.1.2	Accommodation Coefficients	S11-9
S.11.2.1.2.1.3	Guidelines	S11-9
S.11.2.1.3	RCS Plume Induced Thermal Loads	S11-9
S.11.2.1.3.1	RCS Plume Induced Thermal Effects Analysis	S11-9
S.11.2.1.3.1.1	Stagnation/High Angle Of Attack Shapes	S11-9
S.11.2.1.3.1.1.1	Flat Plate At Low Angle Of Attack	S11-9
S.11.2.1.4	RCS Plume Induced Contamination	S11-9

CONTENTS

Section		Page
S.11.2.1.4.1	Plume Radiation	S11-10
S.11.2.1.4.2	Plume Flux	S11-10
S.11.2.1.4.3	Surface Erosion Resulting from Shuttle Plume Impingement	S11-10
S.11.2.1.4.4	Real-Time RCS Oxidizer Leak Rate Predictions	S11-10
S.11.2.2	Station Plume Characteristics	S11-10
S.11.2.2.1	Station RCS Engines	S11-10
S.11.2.2.2	Plume Pressure Environment	S11-10
S.12.0	RESERVED	S12-1
S.13.0	ELECTRICAL WIRING INTERFACES	S13-1
S.13.0.1	Mission-unique Interfaces	S13-1
S.13.1	General	S13-1
S.13.2	ISS Connector/Interfaces at On-orbit Operation	S13-1
S.13.3	ISS Safety Critical Circuit to Hazard Event Correlation	S13-1
S.14.0	JOINT SHUTTLE/SPACE STATION PAYLOAD DEPLOYMENT AND RETRIEVAL SYSTEM INTERFACES	S14-1
S.14.1	Shuttle Remote Manipulator System (SRMS)/SSRMS Payload Bay Requirements	S14-1
S.14.1.1	Reserved	S14-1
S.14.1.2	Maximum SRMS/SSRMS Deployable Payload Stowed-in-the-Bay Envelope	S14-1
S.14.1.3	Clearance for SRMS/SSRMS Payload Maneuvers	S14-1
S.14.1.3.1	Clearance Requirements for Payloads While the Trunnions are in the Latch Guides	S14-1

CONTENTS

Section		Page
S.14.1.3.2	Clearance Requirements for Payloads Prior to Clearing the Latch Guides	S14-1
S.14.1.4	Clearance Requirements for Payloads Out of the Cargo Bay	S14-1
S.14.1.5	SRMS/SSRMS Auto Trajectory Clearance Requirements	S14-1
S.14.2	Payload Handling Operations	S14-1
S.14.2.1	SRMS/SSRMS Operations	S14-1
S.14.3	Operational Hardware Constraints	S14-1
S.14.3.1	Grapple Fixture to CE Operating Load Limits	S14-1
S.14.3.2	SRMS Vibration Frequency	S14-1
S.14.3.3	Flight Releasable Grapple Fixture (FRGF) Temperatures	S14-1
S.14.3.4	SRMS/SSRMS End Effector Temperature	S14-1
S.14.3.5	SSRMS Vibration Frequency	S14-1
S.14.3.6	Power Data Grapple Fixture (PDGF) Temperatures	S14-2
S.14.4	Berthing/Unberthing Operations Requirements and Constraints	S14-2
S.14.5	Shuttle and Station Vehicle Operations Constraints During Robotic Operations	S14-2
S.14.5.1	Shuttle Digital Auto Pilot (DAP) with SRMS Operations	S14-2
S.14.5.1.1	Shuttle DAP Operations with SRMS/Payload in Position Hold Mode or Brakes on Mode	S14-2
S.14.5.1.2	Shuttle DAP Operations with SRMS/Payload in Motion	S14-2
S.14.5.2	Station Control Moment Gyro (CMG) Thruster Assist (TA) with SRMS Operations	S14-2
S.14.5.3	Station Thrusters Only with SRMS Operations	S14-2
S.14.5.4	Shuttle DAP and SSRMS Operations	S14-2

CONTENTS

Section		Page
S.14.5.4.1	Shuttle DAP Operations with SSRMS/Payload in Position Hold Mode or Brakes on Mode	S14-2
S.14.5.4.2	Shuttle DAP Operations with SSRMS/Payload in Motion	S14-2
S.14.5.5	Station CMG TA and SSRMS/Payload in Motion	S14-2
S.14.5.6	Station Thruster Only and SSRMS Operations	S14-2
S.14.5.7	Shuttle DAP and ORU Translation Device (OTD) Operations	S14-2
S.14.5.7.1	Shuttle DAP Operations for Unloaded OTD	S14-2
S.14.5.7.2	Shuttle DAP Operations with OTD/Payload with Clutches Engaged	S14-3
S.14.5.7.3	Shuttle DAP Operations with OTD/Payload in Motion	S14-3
S.14.5.8	Station CMG TA and OTD Operations	S14-3
S.14.5.8.1	Station CMG TA Operations for Unloaded OTD	S14-3
S.14.5.8.2	Station CMG TA Operations with OTD/Payload with Clutches Engaged	S14-3
S.14.5.8.3	Station CMG TA Operations with OTD/Payload in Motion	S14-3
S.14.5.9	Station Thrusters Only and OTD Operations	S14-3
S.14.5.9.1	Station Thrusters Only Operations for Unloaded OTD	S14-3
S.14.5.9.2	Station Thrusters Only Operations with OTD/Payload with Clutches Engaged	S14-3
S.14.5.9.3	Station Thrusters Only Operations with OTD/Payload in Motion	S14-3
S.14.5.10	Shuttle DAP and Strela Operations	S14-3
S.14.5.10.1	Shuttle DAP Operations for Unloaded Strela/Payload	S14-3
S.14.5.10.2	Shuttle DAP Operations with Strela/Payload with Clutches Engaged	S14-3

CONTENTS

Section		Page
S.14.5.10.3	Shuttle DAP Operations with Strela/Payload in Motion	S14-3
S.14.5.11	Station CMG TA and Strela Operations	S14-3
S.14.5.11.1	Station CMG TA Operations for Unloaded Strela/Payload	S14-3
S.14.5.11.2	Station CMG TA Operations with Strela/Payload with Clutches Engaged	S14-4
S.14.5.11.3	Station CMG TA Operations with Strela/Payload in Motion	S14-4
S.14.5.12	Station Thrusters Only and Strela Operations	S14-4
S.14.5.12.1	Station Thrusters Only Operations for Unloaded Strela/Payload	S14-4
S.14.5.12.2	Station Thrusters Only Operations with Strela/Payload with Clutches Engaged	S14-4
S.14.5.12.3	Station Thrusters Only Operations with Strela/Payload in Motion	S14-4
S.14.6	Externally Induced Loads	S14-4
S.20.0	WAIVERS, DEVIATIONS AND EXCEEDANCES	S20-1
S.20.1	SRMS/SSRMS Auto Trajectory Clearance	S20-1

APPENDICES

A ABBREVIATIONS AND ACRONYMS A-1

TABLES

Table		Page
S.3.0.1.5-1	ISS Fixed Cameras	S3-1
S.3.0.1.10.5-1	ISS Visiting Vehicle Docking Ports	S3-2
S.4.1.1-1	ISS Limit Load Constraints	S4-2
S.4.1.1-2	ISS Mated Interface Load Constraints at ISS to Shuttle Interface	S4-17
S.4.1.1-3	APAS Limit Load Constraints at FGB/PMA-1 Interface	S4-17
S.4.1.1-4	Probe and Cone Docking Mechanism Limit Load Constraints	S4-18
S.4.1.4-1	Total Hardware Certification Fatigue Load Spectra Constraints	S4-19
S.4.2.3.5-1.	Off-Nominal DDO Peak Plume Pressures	S4-27
S.4.2.1.1-1	ISS Array and Radiator Angles for Shuttle Approach	S4-35
S.4.2.1.1-2	ISS Array and Radiator Angles for Shuttle Separation	S4-36
S.4.2.3.1-1	ISS PV Array Angles for Shuttle/ISS Mated Operations Dynamic Analysis	S4-37
S.4.2.3.2.1.1-1	Jet Selection for ALT PRCS Control – Initial Configuration (Prior to AMS Installation) 1-Jet ALT PRCS, Low Z with +/- X Jets, Fwd Y Jets Deselected	S4-38
S.4.2.3.2.1.1-2	Jet Selection for ALT PRCS Control for Reboost – Initial Configuration (Prior to AMS Installation) 1-Jet ALT PRCS, Low Z without X Jets, Fwd Y Jets Deselected	S4-39
S.4.2.3.2.1.1-3	Jet Selection for VRCS Control – Initial Configuration (Prior to AMS Installation)	S4-40
S.4.2.3.2.1.1-4	Jet Selection for ALT PRCS Control – Final Configuration (After AMS Installation) 1-Jet ALT PRCS, Low Z with +/- X Jets, Fwd Y Jets Deselected	S4-41
S.4.2.3.2.1.1-5	Jet Selection for ALT PRCS Control for Reboost – Final Configuration (After AMS Installation) 1-Jet ALT PRCS, Low Z without X Jets, Fwd Y Jets Deselected	S4-42

TABLES

Table		Page
S.4.2.3.2.1.1-6	Jet Selection for VRCS Control – Final Configuration (After AMS Installation)	S4-43
S.4.2.3.2.4.1-1	ISS RS Thruster Torques and Ang. Accelerations Used for All Attitude Control Modes of Mated Stages	S4-44
S.4.2.3.2.4.4-1	Momentum Manager Desaturation Commands for SM Thrusters	S4-49
S.4.2.3.2.4.4-2	Momentum Manager Desaturation Commands for Progress Thrusters	S4-50
S.4.2.3.9-1	Unlocked SARJ Constraints for EVA and Unisolated Exercise	S4-51
S.4.3.2.1-1	SM Solar Array Hardstop Definition	S4-76
S.9.0.1-1	1553B Bus Setup For OIU On-orbit Interfaces	S9-3
S.9.0.1.3-1	Time Slot Assignments for Command Transfers	S9-4
S.9.0.1.4-1	Command Destination Routing Codes	S9-5
S.9.0.1.5-1	Mission ULF6 Telemetry Format Description	S9-6
S.9.0.1.6-1	Mission ULF6 Devices and Bus/RT Assignments	S9-7
S.9.0.1.7-1	Subaddress Assignments - OIU as BC	S9-8
S.9.0.1.7-2	Subaddress Assignments - OIU as RT	S9-9
S.11.1.2.2-1	ISS RS MCS Control System Parameters Using Thrusters	S11-2
S.11.1.4.2.1-1	Shuttle Attitude Control DAP Parameters	S11-5
S.11.1.4.2.2-1	ISS RS MCS Parameters Using Thrusters	S11-6
S.11.1.4.2.2-2	ISS USOS ACS Parameters with RS Thruster Assist	S11-6
S.11.1.4.2.3.1-1	Shuttle Automated Reboost DAP Parameters	S11-7
S.11.1.4.2.3.1-2	Shuttle Automated Reboost Design Options	S11-7

FIGURES

Figure		Page
S.3.0.1.2-1	Orbiter/ISS Docking Orientation	S3-3
S.3.0.1.10.2-1	ISS Proximity Operations Approach Configuration	S3-4
S.3.0.1.10.3-1	AMS and ELC3 installed on ISS	S3-5
S.3.0.1.10.3-2	ISS Configuration Before Orbiter Separation	S3-6
S.3.0.1.10.4-1	ISS Undocked Separation Configuration	S3-7
S.4.2.3.2.1.1-1	PRCS ALT DAP Unipolar Forcing Function	S4-54
S.4.2.3.2.1.1-2	PRCS ALT DAP Bipolar Forcing Function	S4-55
S.4.2.3.2.1.1-3	VRCS Forcing Function	S4-56
S.4.2.3.2.1.1-4	One-sided Limit Cycle Pattern	S4-57
S.4.2.3.2.1.1-5	Two-sided Limit Cycle Pattern	S4-57
S.4.2.3.2.1.2-1	Forcing Function for Shuttle Automatic Reboost of ISS	S4-58
S.4.2.3.2.1.2-2	Forcing Function Profile for Shuttle Automatic Reboost Mode Cycling	S4-58
S.4.2.3.2.4.1-1	RS MCS Thruster Profile for Arbitrary Maneuver (Progress and SM Thrusters)	S4-59
S.4.2.3.2.4.1-2	RS MCS Thruster Pattern for Single Arbitrary Firing (Progress and SM Thrusters)	S4-60
S.4.2.3.2.4.1-3	RS MCS Thruster Profile for Arbitrary Maneuver (SM Thrusters	S4-61
S.4.2.3.2.4.1-4	RS MCS Thruster Pattern for Single Arbitrary Firing (SM Thrusters)	S4-62
S.4.2.3.2.4.1-5	RS MCS Thruster Profile for Arbitrary Maneuver (Progress and SM Thrusters)	S4-63
S.4.2.3.2.4.1-6	RS MCS Thruster Pattern for Single Arbitrary Firing (Progress and SM Thrusters)	S4-64
S.4.2.3.2.4.1-7	RS MCS Thruster Timeline for Attitude Hold of LVLH Attitude	S4-65

FIGURES

Figure		Page
S.4.2.3.2.4.1-8	SM MCS Thruster Timeline for ISS Attitude Control During SRMS or SSRMS OPS	S4-66
S.4.2.3.2.4.5-1	USTO Thruster Timeline for Attitude Hold of LVLH Attitude	S4-67
S.4.2.3.2.4.5-2	USTO Thruster Profile for Arbitrary Maneuver (Progress or SM Thrusters)	S4-68
S.4.2.3.2.4.5-3	USTO Thruster Pattern for Single Arbitrary Firing (Progress or SM Thrusters) Maneuver Manager Option 0	S4-69
S.4.2.3.2.4.5-4	USTO Thruster Pattern for Single Arbitrary Firing (Progress or SM Thrusters) Maneuver Manager Option 1	S4-70
S.4.2.3.2.4.5-5	USTO Thruster Pattern for Single Arbitrary Firing (Progress or SM Thrusters) Maneuver Manager Option 2	S4-71
S.4.2.3.2.4.5-6	USTO Thruster Pattern for Single Arbitrary Firing (SM Thrusters) Maneuver Manager Option 0	S4-72
S.4.2.3.2.4.5-7	USTO Thruster Pattern for Single Arbitrary Firing (SM Thrusters) Maneuver Manager Option 1	S4-73
S.4.2.3.2.4.5-8	USTO Thruster Pattern for Single Arbitrary Firing (SM Thrusters) Maneuver Manager Option 2	S4-74
S.4.3.2.1-1	ISS Plume Geometry Model for Shuttle Approach	S4-76
S.4.3.2.1-2	ISS Plume Geometry Model for Shuttle Separation	S4-77
S.9.0.1-1	OIU and ISS Software Interface	S9-10

S.1.0 SCOPE

S.1.1 Purpose

The purpose of this document is to control and define the interfaces between the Orbiter and the International Space Station (ISS) during proximity and mated operations. This document assumes that the ISS is an independent orbiting entity. Specifically, this document performs the following functions:

a. Documents and references those Orbiter interfaces that are applicable to Orbiter/ISS proximity and mated operations. These interface requirements are directly derived from Shuttle Orbiter/International Space Station Interface Definition Document, NSTS-21000-IDD-ISS.

b. Documents and references Orbiter/ISS proximity and mated integration requirements which are unique to this project and cannot be derived from NSTS-21000-IDD-ISS.

c. Documents and dispositions mission-unique Cargo Element (CE) hand-off operations between the Orbiter and the ISS.

d. Establishes commonality with respect to analytical approaches, analytical models, technical data, and definitions for integrated analysis by all interfacing parties.

S.1.2 Definition

See Section 3.0 of International Space Station-Utilization and Logistics Flight 6, Mission Integration Plan, NSTS 21507.

S.1.3 Organization of Document

This format of this document is derived from Appendix S of NSTS-21000-IDD-ISS. In the event of conflict between this document and Appendix S of NSTS-21000-IDD-ISS, this document shall take precedence. Appendix S is structured to correlate with Sections 3.0 through 14.0, NSTS-21000-IDD-ISS, with the exception that every paragraph is preceded with an “S.” This document defines unique interface requirements for this mission and references standard requirements from NSTS-21000-IDD-ISS as applicable.

S.1.4 Effectivity

Unless otherwise specified, the interfaces defined and controlled herein are applicable to the operational configuration of the combined Shuttle/ISS system in support of ISS-Utilization and Logistics Flight6 (ULF6).

S.1.5 Change Policy

See Section 1.4 of NSTS-21000-IDD-ISS.

S.1.6 Documentation

S.1.6.1 Mission Unique

As a mission-unique Interface Control Document (ICD), this document defines and controls specific mission requirements as well as Shuttle Orbiter provisions. The mission-specific requirements reside at the beginning of Sections S.3.0 through S.14.0.

Paragraph S.X.0.X (i.e., S.3.0.X, S.8.0.X, etc.) is used to define the mission-unique on-orbit interface requirements for any of the following four flight phases 1) rendezvous and approach, 2) docking and undocking, 3) docked, and 4) separation, which are defined in Section S.1.2 of Appendix S of NSTS-21000-IDD-ISS.

Standard Space Station provisions as defined in Sections S.3.0 through S.14.0 are derived from NSTS-21000-IDD-ISS and are selectively defined or referenced to reflect the requirements established in Paragraphs S.X.0.X, and the Space Station Mission Integration Plan (MIP) for the Mission ISS-ULF6 (NSTS 21507). A standard paragraph identified in S.3.X.X through S.14.X.X is 'Applicable' if it is applicable for any of the four flight phases identified above and defined in Section S.1.2 of Appendix S of NSTS-21000-IDD-ISS.

S.1.6.2 Relationship to MIP

In the event of conflict between this ICD and the MIP, NSTS 21507, the MIP shall take precedence.

S.1.6.3 Waivers, Deviations and Exceedances

See Section 1.5 of NSTS-21000-IDD-ISS.

S.1.6.4 Paragraph Dispositioning

On-orbit provisions as defined in Sections S.3.0 through S.14.0 are selectively identified to reflect the requirements established in the specific MIP. Sections S.1.0 and S.2.0 are unique to each mission-unique On-orbit ICD. The paragraph dispositions definitions below shall be used in establishing the specific On-orbit ICD requirements:

Applicable	Sections' Paragraph Text, Tables, and Figures are shown in full, with associated subparagraphs and their contents therein.
Not Applicable	Sections' Paragraph Text, Tables, and Figures are deleted in their entirety except for paragraph's number and title, which shall be shown as "Not Applicable." Subparagraphs will automatically be deleted when the leading paragraph is "Not Applicable."
Title	Only a lead-in paragraph that is shown by paragraph number and title only. This condition allows disposition of the subparagraphs without carrying the lead-in paragraph (text, tables and/or figures) when its content does not add to the ICD.
Exception	An exception is taken to the requirement for a unique On-orbit ICD paragraph, table, or figure. The exception paragraph shall use less than the total Orbiter capability identified in the NSTS-21000-IDD-ISS, Appendix S. Exceptions can be only written against the text of a paragraph. Any exception to tables or figures shall be included in the paragraph text.
Reserved	A reserved paragraph number is kept for purposes of paragraph number and document control.

S.2.0 DOCUMENTS

See Section 2.0 of NSTS-21000-IDD-ISS.

S.2.1 Applicable Documents

The following documents of the exact issue shown form a part of this document to the extent specified herein. In the event of conflict between the documents referenced and the content of this document, the contents of this document shall be considered a superseding requirement.

NSTS-21000-IDD-ISS International Space Station Definition Document

Ref. Para. S.1.1, S.1.3, S.1.5, S.1.6.1, S.1.6.3, S.1.6.4, 2.0, S.3.0.1.1, S.3.0.1.3, S.3.0.1.4, S.3.0.1.5, S.3.0.1.6, S.3.0.1.8, S.3.1, S.3.2, S.3.3, S.4.0, S.4.1, S.4.1.2, S.4.1.3.1, S.4.1.3.2, S.4.2, S.4.2.1, S.4.2.1.2, S.4.2.1.2.1, S.4.2.1.2.2, S.4.2.1.2.3, S.4.2.1.2.4, S.4.2.1.2.5, S.4.2.1.2.6, S.4.2.2, S.4.2.2.2, S.4.2.2.3, S.4.2.2.4, S.4.2.2.5, S.4.2.2.6, S.4.2.2.7, S.4.2.2.9, S.4.2.3.1, S.4.2.3.1.1, S.4.2.3.1.2, S.4.2.3.2.1.5, S.4.2.3.2.2, S.4.2.3.2.3, S.4.2.3.2.4.3.1, S.4.2.3.2.4.3.2, S.4.2.3.2.4.6, S.4.2.3.2.4..7, S.4.2.3.2.5, S.4.2.3.2.6, S.4.2.3.3, S.4.2.3.3.1, S.4.2.3.3.2, S.4.2.3.4.1, S.4.2.3.4.2, S.4.2.3.4.3, S.4.2.3.4.4, S.4.2.3.4.5, S.4.2.3.5.3, S.4.2.3.6, S.4.2.3.7, S.4.2.3.8, S.4.2.4, S.4.2.4.2, S.4.2.4.3, S.4.2.4.3.1, S.4.2.4.3.2, S.4.2.4.3.3, S.4.2.4.4, S.4.3.1, S.4.3.1.1, S.4.3.1.2, S.4.3.1.4, S.4.3.2.1, S.4.3.2.2.1, S.4.3.2.3.1, S.6.1, S.6.2, S.6.3, S.7.1, S.7.2, S.7.3, S.8.1, S.8.2, S.8.3, S.8.4, S.8.5, S.8.6, S.9.0.1, S.9.0.1.1.1.1, S.9.0.1.1.1.2, S.9.0.1.1.2.1, S.9.0.1.1.2.2, S.9.0.1.1.3.1, S.9.0.1.1.3.2, S.9.0.1.4, S.9.1, S.9.3, S.9.4, S.10.0.1.1, S.10.0.2, S.10.0.2.1, S.10.0.2.2, S.10.0.2.3, S.10.0.4, S.10.1, S.10.2, S.10.3, S.10.4, S.10.5, S.10.6, S.10.7, S.10.9, S.11.0, S.11.1, S.11.1.1, S.11.1.1.1, S.11.1.1.2, S.11.1.2, S.11.1.2.1, S.11.1.3, S.11.1.3.1, S.11.1.3.2, S.11.1.3.3, S.11.1.4, S.11.1.4.2.3, S.11.1.4.2.3.2, S.11.1.4.2.4, S.11.1.4.3.1, S.11.1.4.3.2, S.11.1.4.3.3, S.11.1.4.4.1, S.11.1.4.4.1.1, S.11.1.4.4.1.2, S.11.1.4.4.1.3, S.11.1.4.5.1, S.11.1.4.5.2, S.11.1.5, S.11.1.5.1, S.11.1.5.2, S.11.1.5.3, S.11.2.1, S.11.2.1.1, S.11.2.1.1.1, S.11.2.1.2.1.2, S.11.2.1.2.1.3, S.11.2.1.3.1.1, S.11.2.1.3.1.1.1, S.11.2.1.4.1, S.11.2.1.4.2, S.11.2.1.4.3, S.11.2.1.4.4, S.11.2.2.1, S.11.2.2.2, S.13.1, S.13.2, S.13.3, S.14.0, S.14.1.2, S.14.1.3, S.14.1.3.1, S.14.1.3.2, S.14.1.4, S.14.1.5, S.14.2.1, S.14.3.1, S.14.3.2, S.14.3.3, S.14.3.4, S.14.3.5, S.14.3.6, S.14.4, S.14.5, S.14.5.1, S.14.5.1.1, S.14.5.1.2, S.14.5.2, S.14.5.3, S.14.5.4, S.14.5.4.1, S.14.5.4.2, S.14.5.5, S.14.5.6, S.14.5.7, S.14.5.7.1, S.14.5.7.2, S.14.5.7.3, S.14.5.8, S.14.5.8.1, S.14.5.8.2, S.14.5.8.3, S.14.5.9, S.14.5.9.1, S.14.5.9.2, S.14.5.9.3, S.14.5.10, S.14.5.10.1, S.14.5.10.2, S.14.5.10.3, S.14.5.11, S.14.5.11.1, S.14.5.11.2, S.14.5.11.3, S.14.5.12, S.14.5.12.1, S.14.5.12.2, S.14.5.12.3, S.14.6; Tables S.4.2.1.1-1, S.4.2.1.1-2, S.4.2.3.1-1, S.4.3.2.1-1

NSTS 21507	International Space Station-Utilization and Logistics Flight6, Mission Integration Plan Ref. Para. S.1.2, S.1.6.1, S.1.6.2
NSTS 21507 Annex 4	Orbiter Command and Data Annex, International Space Station-Utilization and Logistics Flight6, Annex 4 Ref. Para. S.9.0.1.1.2.1, Table S.9.0.1.4-1
EID 684-10411	International Signal List Collector Drawing Ref. Para. S.9.0.1.1.1.1, S.9.0.1.1.1.2 Table S.9.0.1.4-1
EID 684-12270	ISS Venting Data for ISS External Contamination Analyses Ref. Para. S.10.0.3
EID 684-13765	Predicted Thruster Plume Particle Fluence and Contaminant Deposition on Orbiter Surfaces from Soyuz/Progress Proximity Operations Ref. Para. S.10.0.5
EID 684-13936	Thruster Plume Particle Fluence to Orbiter Windows for Soyuz/Progress Abort Scenario Ref. Para. S.10.0.5
EID 684-13948	VAC-ULF4 Integrated On-Orbit Loads and Dynamics Structural Loads Report Ref. Para. S.4.2.3.5.4
EID 684-14147	Analysis of Russian Vehicle Approach and Separation Plume Pressures for ULF-4 Orbiter-Mated ISS Ref. Para. S.4.2.3.5
EID 684-14214	ISS VAC-ULF6 Integrated Loads and Dynamics Integrated Models Ref. para. S.4.3.2.2

EID 684-14474	VAC ULF6 Integrated On-Orbit Loads and Dynamic Structural Loads Report Ref. Para. S.4.2.3.5, S.4.2.3.5.1, S.4.2.3.5.2
EID 684-14534	Flight ULF-6 Dual Docked Loads for 26S Docking Ref. Para. S.4.2.3.5
EID 684-14587	ISS Program Document, 25S Thruster Plume particle Fluence and Contaminant Deposition on AMS While in the Orbiter Payload Bay During Flight ULF6 Ref. Para. S.10.0.5
ICD-A-21507	Shuttle Orbiter/AMS-02 Cargo Element Interfaces Ref. Para. S.9.0.1.1.3
JSC 26557	International space Station Configuration Sequence Ref. Para. S.4.2.1.1, S.4.2.3.1, S.4.3.2.1.1, S.4.2.4.1
SSP 30219	Space Station Reference Coordinator Systems Ref. Table S.4.1.1-1, S.4.1.1-2
SSP 30261:004	Data Load Commands for MDM in Diagnostic Mode Ref. Table S.9.0.1.4-1

S.2.2 Reference Documents

TBD

S.3.0 ORBITER/STATION PHYSICAL INTERFACES

S.3.0.1 Mission-unique Configuration Definition

S.3.0.1.1 Orbiter and Station Coordinate System

See Section S.3.1.1.1 of Appendix S of NSTS-21000-IDD-ISS.

S.3.0.1.2 Docking Orientation

Orbiter/ISS docking orientation shall be as shown in Figure S.3.0.1.2-1.

S.3.0.1.3 ISS Tracking Light

See Section S.3.1.3.2 of Appendix S of NSTS-21000-IDD-ISS.

S.3.0.1.4 ISS Thermal Control System (TCS) Targets

See Section S.3.1.4.2 of Appendix S of NSTS-21000-IDD-ISS.

S.3.0.1.5 Orbiter and ISS Cameras

The ISS fixed cameras installed prior to flight ISS-ULF6 and post ISS-ULF6 departure are located in Table S.3.0.1.5-1.

For the Space Station Remote Manipulator System (SSRMS) cameras and the Mobile Remote Servicer Base System (MBS) cameras, see Section S.3.1.5.1 of Appendix S of NSTS-21000-IDD-ISS.

Table S.3.0.1.5-1 ISS Fixed Cameras

	Camera Port	12	13	3	7	8	9	10	1	11	2	4	6	5	14
	ISS Location	Node 1	Lab	S1_OL	P1_IL	P1_OU	P1_OL	P3	S3	Node 2	S1_ OU	S1_IU	P1_IU	S1_IL	Node 3
Prior to ULF6 Arrival		WETA	ETVCG	ETVCG	ETVCG	WETA	ETVCG		WETA			OBSS KAU	FPMU	X	
Post ULF6 Departure		WETA	ETVCG	ETVCG	ETVCG	WETA	ETVCG		WETA			OBSS KAU	FPMU	X	

☐ - Port available, not being utilized

X - Port not available for use

* - Port usage is limited by s-band antenna

S.3.0.1.6 ISS Centerline Docking Target

See Section S.3.1.5.2 of Appendix S of NSTS-21000-IDD-ISS.

S.3.0.1.7 Centerline Berthing Camera and Target

The centerline berthing camera and target will not be used on ULF6.

S.3.0.1.8 Moding Indicator

See Section S.3.1.6 of Appendix S of NSTS-21000-IDD-ISS.

S.3.0.1.9 ISS Space Vision System (SVS) Targets

No SVS targets are used on ULF6.

S.3.0.1.10 Vehicle Configurations
The solar array wing angles provided in the ICD figures may not reflect the actual on-orbit angles. The ICD figures only document the installation, deployment, or retraction of the solar array wings.

S.3.0.1.10.1 Shuttle Proximity Operations Approach Configuration
The Shuttle proximity operations approach configuration shall be as shown in Shuttle drawing VA72-200214.

S.3.0.1.10.2 ISS Proximity Operations Approach Configuration
The ISS proximity operations approach configuration shall be as shown in Figure S.3.0.1.10.2-1.

S.3.0.1.10.3 ISS and Shuttle Mated Assembly Configurations
The ISS and Shuttle mated assembly configurations shall be as shown in Figures S.3.0.1.10.3-1 and S.3.0.1.10.3-2.

S.3.0.1.10.4 ISS Undocked Separation Configuration
The ISS undocked separation configuration shall be as shown in Figure S.3.0.1.10.4-1, Sheets 1 through 6.

S.3.0.1.10.5 ISS Visiting Vehicle Docking Ports
The ISS visiting vehicles can dock to any of the ports identified within the Table S.3.0.1.10.5-1. Figures shown within Section S.3.0 are a representative case of the visiting vehicle port utilization. Any combination of nominal or contingency docking ports may be utilized.

Table S.3.0.1.10.5-1 ISS Visiting Vehicle Docking Ports

	SM Aft	**MRM1**	**DC1**	**MRM2**
Progress	Nominal		Nominal	Nominal
Soyuz	Nominal	Nominal	Nominal	Nominal
ATV	Nominal	x	x	x

x - visiting vehicle cannot dock to the port

S.3.0.2 Mission-unique Mated Interfaces

S.3.0.2.1 ISS Androgynous Peripheral Assembly System (APAS)
The ISS APAS is part of and mounted on Pressurized Mating Adapter (PMA)2 on the forward Common Berthing Mechanism (CBM) of the Lab. The ISS APAS location and orientation shall be as shown in Figure S.3.0.1.10.4-1.

S.3.0.2.2 Fluid Interfaces
Air, N2, and O2 are the resources transferred across the Orbiter Docking System (ODS) interface on ISS Flight ULF6.

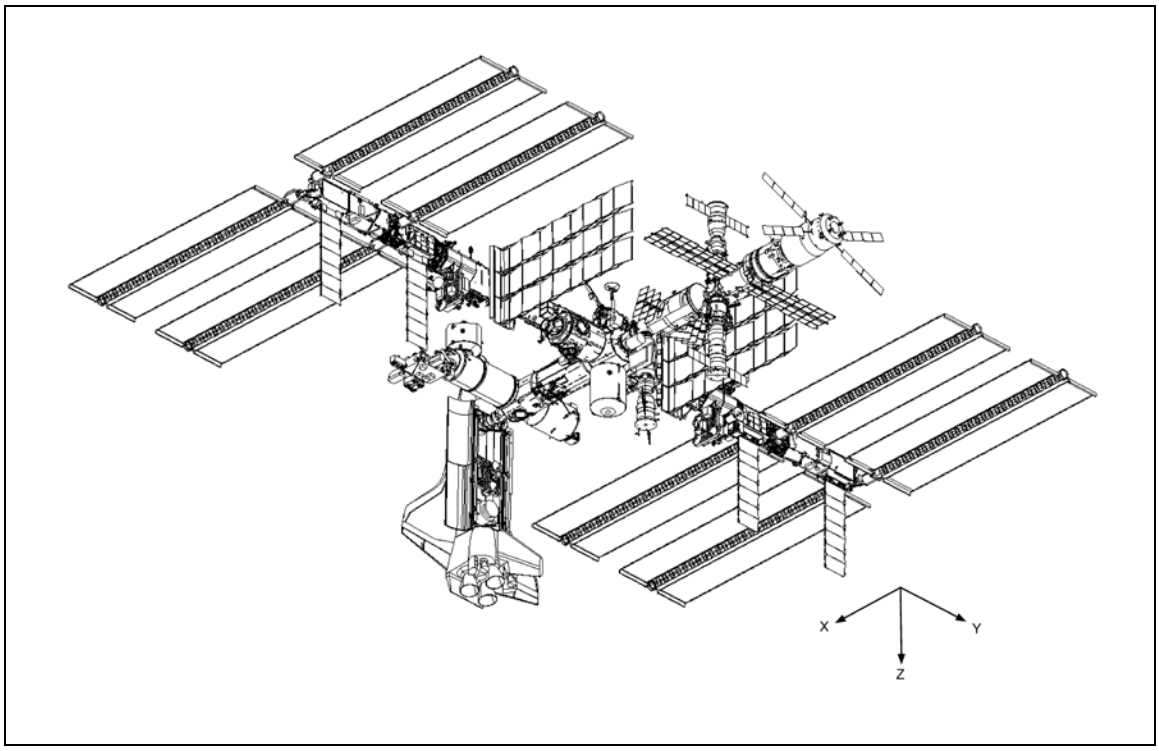

Figure S.3.0.1.2-1 Orbiter/ISS Docking Orientation

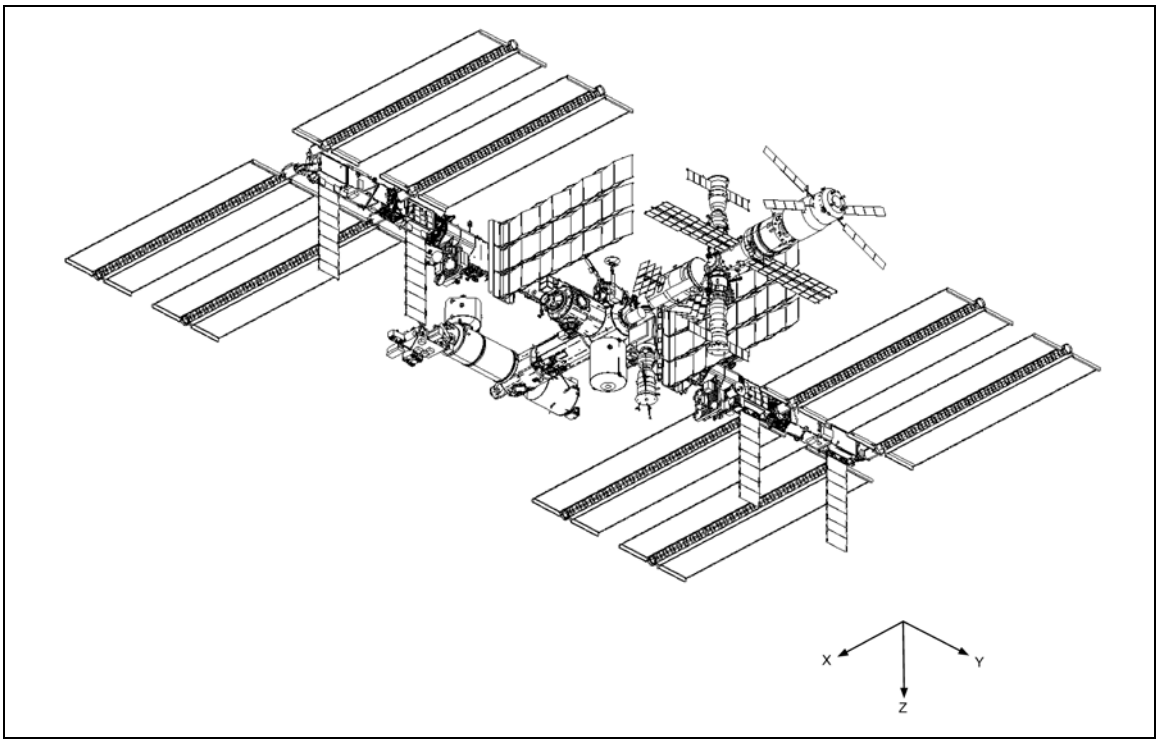

Figure S.3.0.1.10.2-1 ISS Proximity Operations Approach Configuration

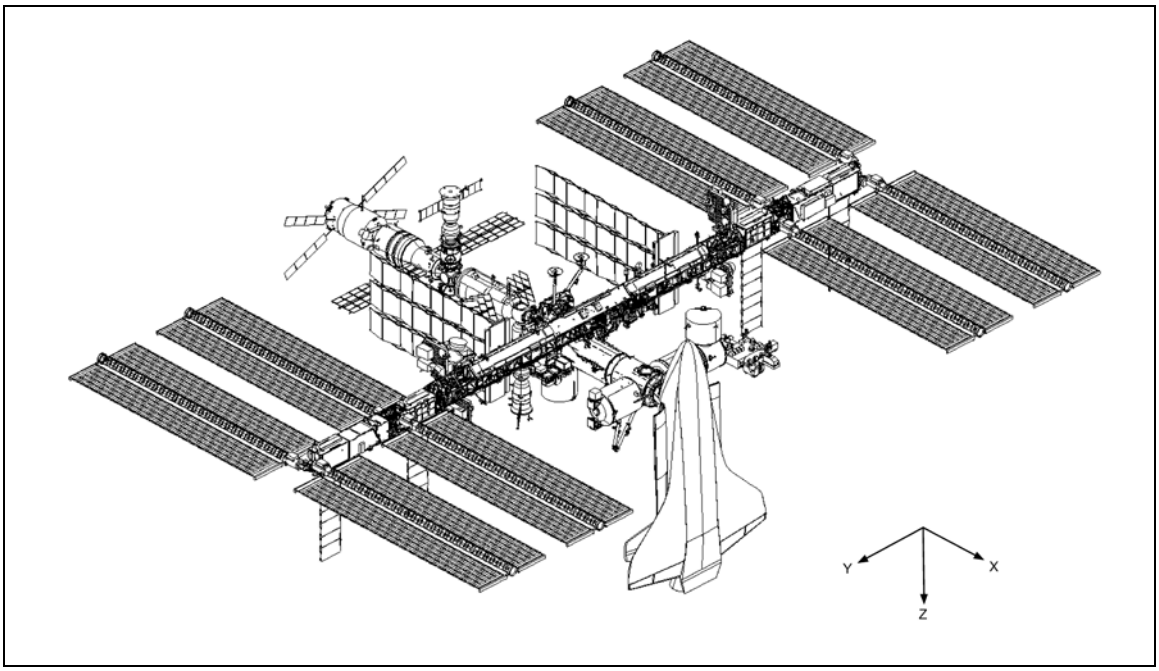

Figure S.3.0.1.10.3-1 AMS and ELC3 installed on ISS

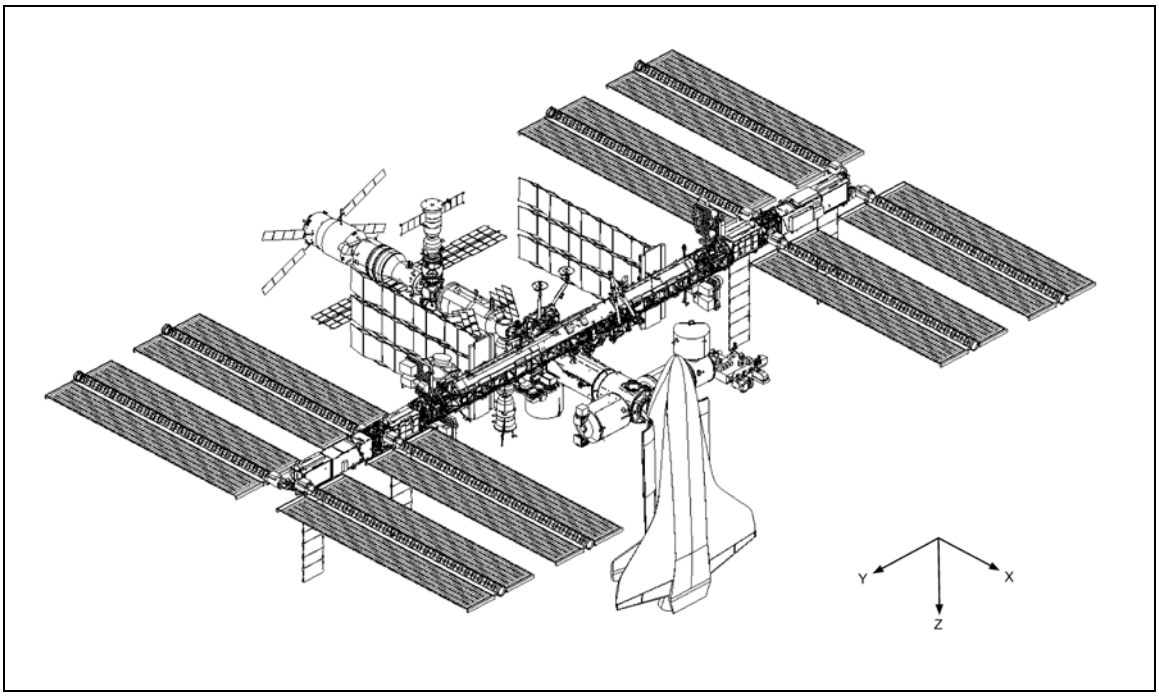

Figure S.3.0.1.10.3-2 ISS Configuration Before Orbiter Separation

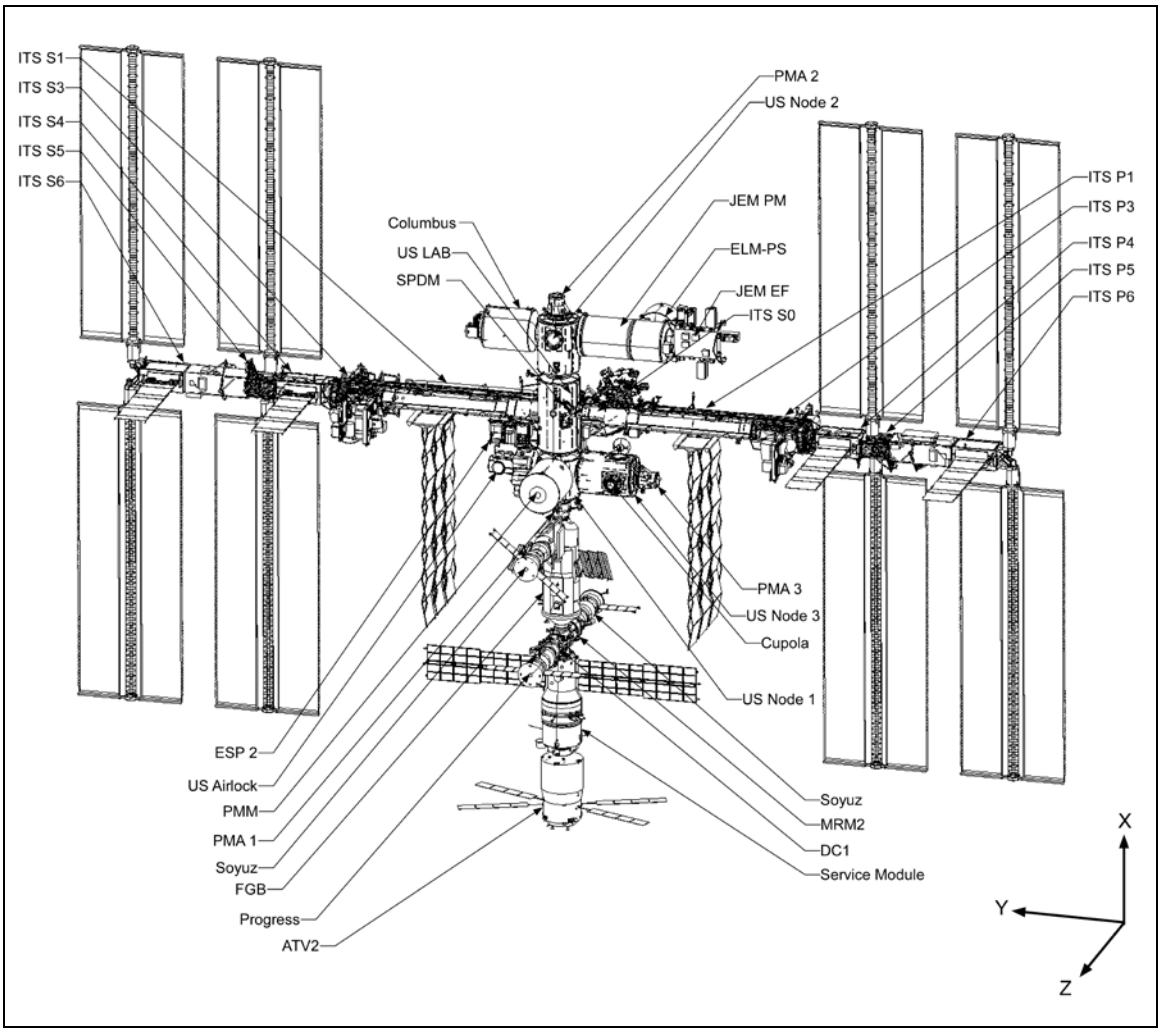

Figure S.3.0.1.10.4-1 ISS Undocked Separation Configuration
(Sheet 1 of 6)

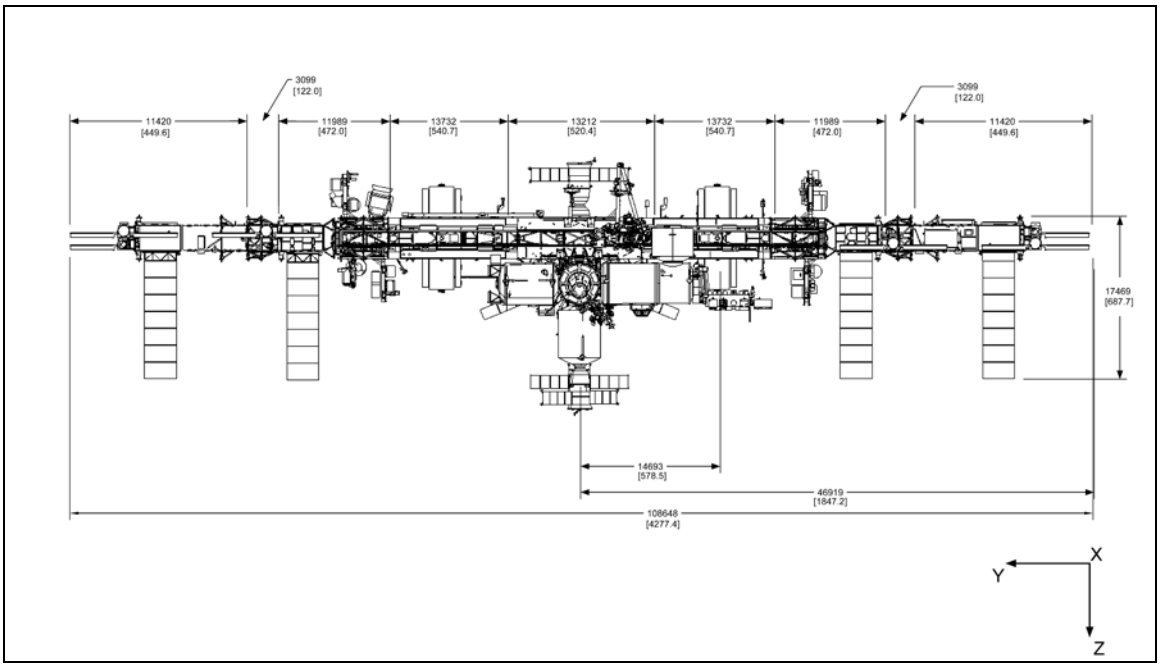

Figure S.3.0.1.10.4-1 ISS Undocked Separation Configuration
(Sheet 2 of 6)

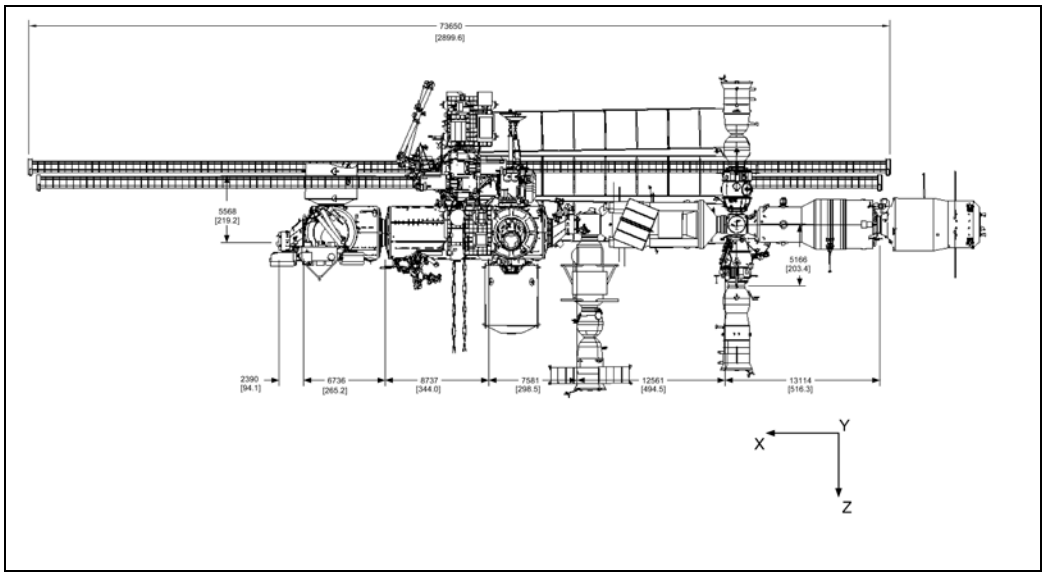

Figure S.3.0.1.10.4-1 ISS Undocked Separation Configuration
(Sheet 3 of 6)

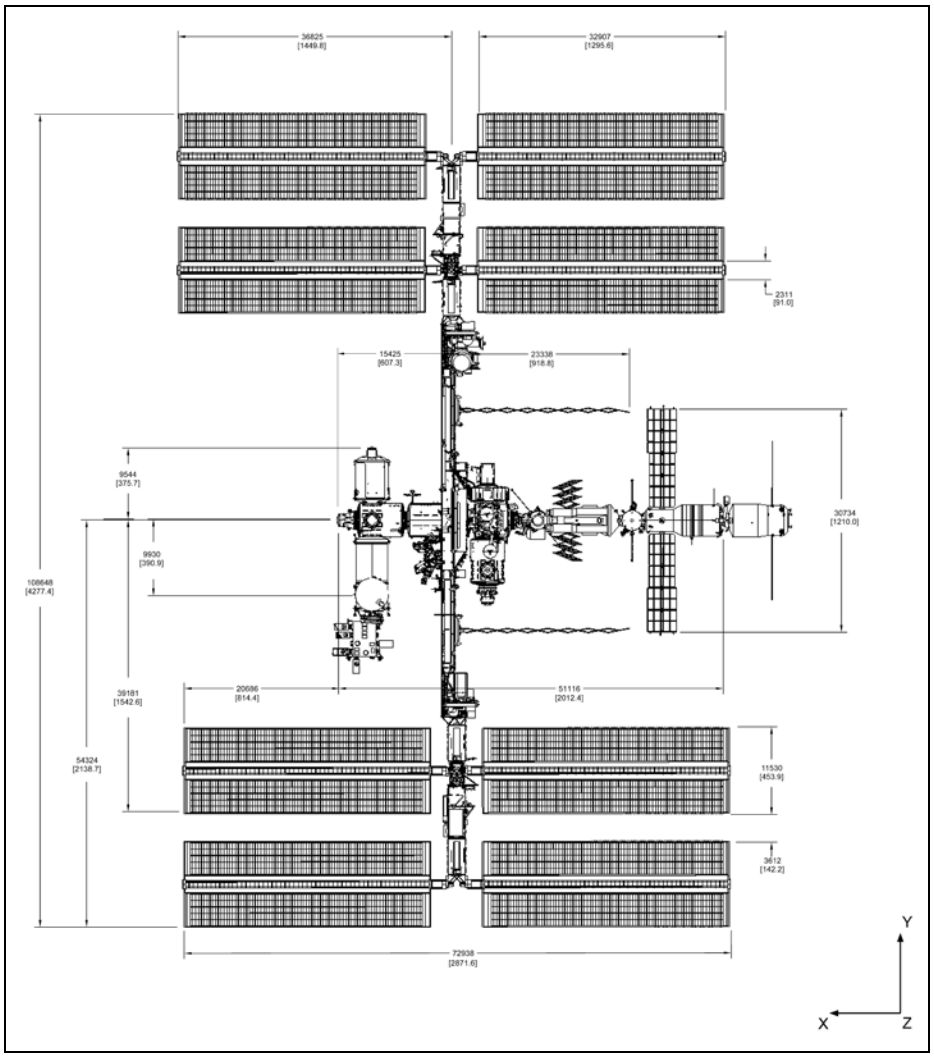

Figure S.3.0.1.10.4-1 ISS Undocked Separation Configuration
(Sheet 4 of 6)

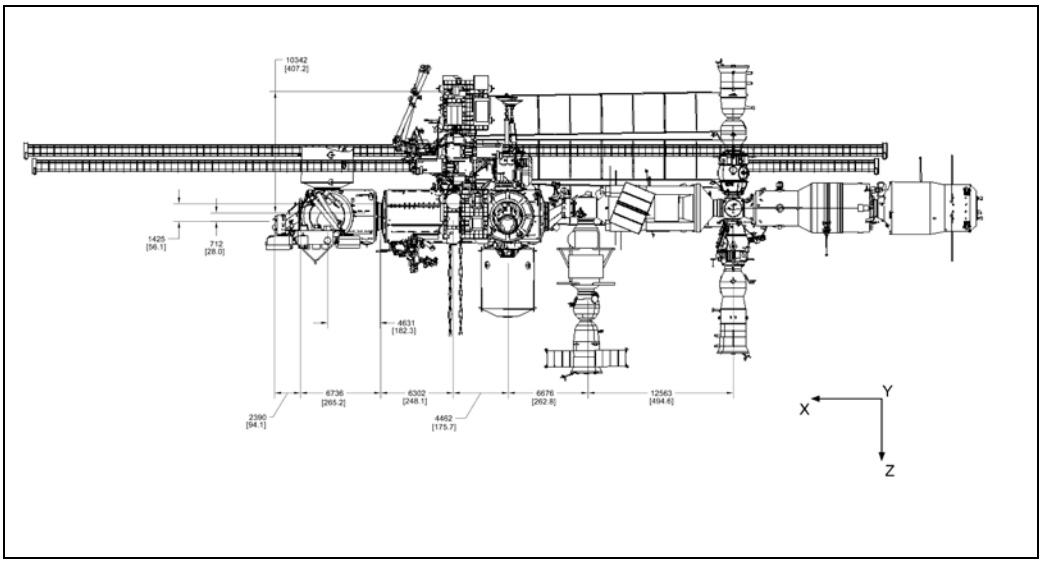

Figure S.3.0.1.10.4-1 ISS Undocked Separation Configuration
(Sheet 5 of 6)

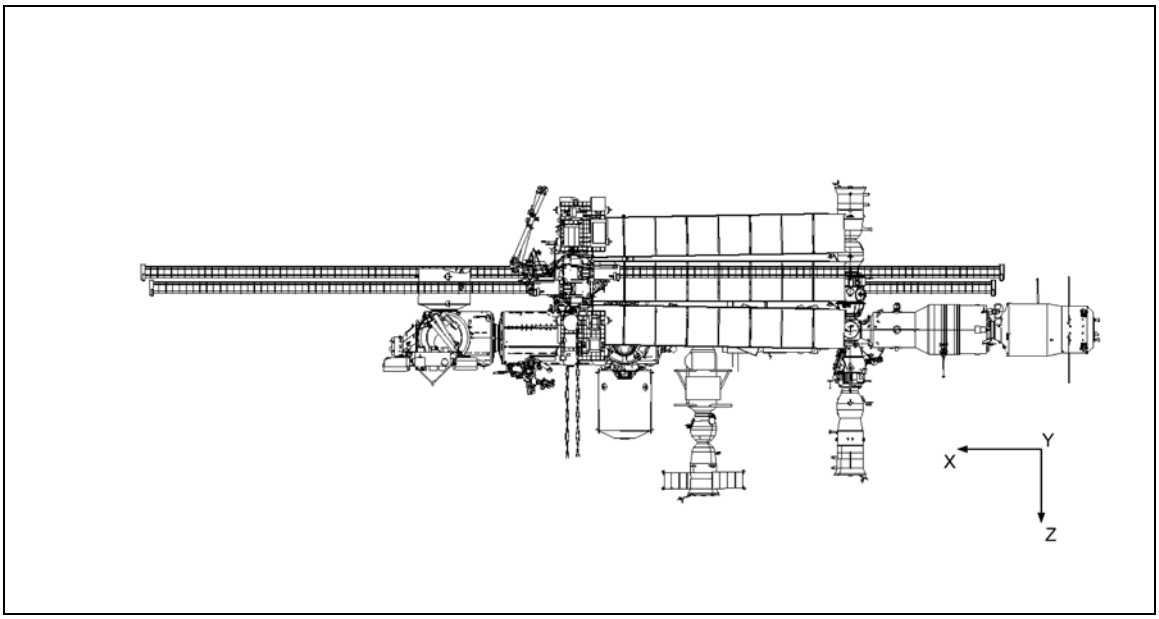

Figure S.3.0.1.10.4-1 ISS Undocked Separation Configuration
(Sheet 6 of 6)

S.3.1 Configuration Definition

See Section S.3.1 of Appendix S of NSTS-21000-IDD-ISS.

S.3.2 Mated Interfaces

See Section S.3.2 of Appendix S of NSTS-21000-IDD-ISS.

S.3.3 Mated Orbiter/Station Clearance Post Shuttle Docking

See Section S.3.3 of Appendix S of NSTS-21000-IDD-ISS.

S.4.0 STRUCTURAL LOADS AND VEHICLE DYNAMICS

Documented in Appendix S of NSTS-21000-IDD-ISS.

S.4.1 Limit Load Constraints

Documented in Appendix S of NSTS-21000-IDD-ISS.

S.4.1.1 ISS Limit Load Constraints

Combined Shuttle induced limit loads to be applied to the ISS during all mission events shall not exceed the values given for the ISS in Tables S.4.1.1-1, S.4.1.1-2, S.4.1.1-3, and S.4.1.1-4. All ISS limit load constraint values given in these tables represent on-orbit transient loads only. They do not include loading conditions such as preloading, internal pressure, and thermal effects. Separate tables of ISS limit load constraints for specific mission phases may be required if mission phase loads vary significantly.

S.4.1.2 Shuttle Limit Load Constraints

Documented in Appendix S of NSTS-21000-IDD-ISS.

S.4.1.3 Manipulator Load Constraints

S.4.1.3.1 Strela and Power Data Grapple Fixture (PDGF) Limit Load Constraints

Documented in Appendix S of NSTS-21000-IDD-ISS.

S.4.1.3.2 ORU Translation Device (OTD)

Documented in Appendix S of NSTS-21000-IDD-ISS.

S.4.1.4 Fatigue Load Spectra Constraints

The fatigue load spectra constraints for Shuttle and ISS components are documented in Table S.4.1.4-1. The table shows the number of load cycles that is allowable at the upper limit of each load amplitude range.

Table S.4.1.1-1 ISS Limit Load Constraints[(1), (2)]

- Russian Space Agency (RSA) Arrays:

Service Module (SM)

	Case 1
Axial load (lb)	±242
Rotating Service Structure (RSS) shear load (lb)	198
Out-of-Plane (OOP) bending moment (in-lb)	±22,550
In-Plane (IP) bending moment (in-lb)	±33,826
Torsional moment (in-lb)	±2,603

Soyuz/Progress

	Case 1
Interaction Equation	±3,469

- European Space Agency (ESA) Arrays:

Automated Transfer Vehicle (ATV)

	Case 1
Axial (lb)	±7.1
RSS Shear (lb)	±9.4
Torsion (in-lb)	±73.4
Bending (in-lb)	±1,628.0

- Module Interfaces:

Mini Research Module 2 (MRM2)/SM zenith

	Case 1	Case 2
Axial load (lb)	±4,409	±3,417
RSS shear load (lb)	2,646	2,205
Torsional moment (in-lb)	±347,185	±43,372
RSS bending moment (in-lb)	867,962	433,724

ATV/SM aft: SM Structure

	Case 1	Case 2
Axial load (lb)	±2,205	±2,425
RSS shear load (lb)	2,205	2,866
Torsional moment (in-lb)	±217,000	±86,798
RSS bending moment (in-lb)	434,000	520,788

ATV/SM aft: ATV structure

	Case 1
Axial load (lb)	±2,425
RSS shear load (lb)	2,866
Torsional moment (in-lb)	±86,798
RSS bending moment (in-lb)	520,788

Table S.4.1.1-1 ISS Limit Load Constraints (continued)

- Module Interfaces (continued):

SM/Functional Cargo Block (FGB)

	Case 1	Case 2
Axial load (lb)	±4,409	±4,409
RSS shear load (lb)	4,409	4,409
Torsional moment (in-lb)	±607,573	±781,166
RSS bending moment (in-lb)	1,041,554	867,962

MRM1/Soyuz: (MRM1 Structure) (3)

	Case 1
Axial load (lb)	±2,006
RSS shear load (lb)	2,205
Torsional moment (in-lb)	±86,795
RSS bending moment (in-lb)	520,800

MRM1/Soyuz: (Soyuz Structure) (3)

	Case 1
Axial load (lb)	±2,205
RSS shear load (lb)	2,866
Torsional moment (in-lb)	±43,400
RSS bending moment (in-lb)	303,793

FGB/Pressurized Mating Adapter (PMA)-1:

	Case 1	Case 2	Case 3	Case 4
Axial load (lb)	±1,300	±1,300	±4,410	±4,409
RSS shear load (lb)	1,330	1,330	3,000	4,409
Torsional moment (in-lb)	±376,000	±662,000	±434,000	±607,588
RSS bending moment (in-lb)	688,000	442,000	434,000	1,041,580

	Case 5
Axial load (lb)	±4,409
RSS shear load (lb)	4,409
Torsional moment (in-lb)	±781,185
RSS bending moment (in-lb)	867,985

SM Nadir/Docking Compartment 1 (DC1) (SM Structure)

	Case 1	Case 2
Axial load (lb)	±4,409	±4,409
RSS shear load (lb)	4,409	4,409
Torsional moment (in-lb)	±607,573	±781,166
RSS bending moment (in-lb)	1,041,554	867,962

SM Nadir/DC1 (DC1 Structure)

	Case 1	Case 2
Axial load (lb)	±4,189	±3,417
RSS shear load (lb)	353	2,205
Torsional moment (in-lb)	±8,680	±43,399
RSS bending moment (in-lb)	433,990	433,990

Table S.4.1.1-1 ISS Limit Load Constraints (continued)

- Module Interfaces (continued):

DC1 Forward Docking Mechanism (Near SM)

	Case 1
Axial load (lb)	±4,189
RSS shear load (lb)	2,205
Torsional moment (in-lb)	±43,399
RSS bending moment (in-lb)	433,990

DC1/Progress (DC1 Structure)

	Case 1
Axial load (lb)	±3,417
RSS shear load (lb)	2,205
Torsional moment (in-lb)	±43,399
RSS bending moment (in-lb)	260,394

DC1/Progress (Progress Structure) (3)

	Case 1
Axial load (lb)	±2,200
RSS shear load (lb)	2,870
Torsional moment (in-lb)	±130,197
RSS bending moment (in-lb)	477,389

FGB/MRM1

	Case 1
Axial load (lb)	±2,425
RSS shear load (lb)	2,866
Torsional moment (in-lb)	±86,744
RSS bending moment (in-lb)	520,468

Node 2/PMA-2: for the PMA-2 side

	Case 1	Case 2	Case 3	Case 4
Axial load (lb)	±7,105	±1,330	±1,300	±3,038
RSS shear load (lb)	3,200	1,705	1,330	889
Torsional moment (in-lb)	±543,000	±451,400	±687,200	±230,093
RSS bending moment (in-lb)	479,000	722,900	442,000	500,050

Node/PMA-3: for the PMA-3 side

	Case 1	Case 2	Case 3
Axial load (lb)	±7,105	±1,330	±1,300
RSS shear load (lb)	3,200	1,705	1,330
Torsional moment (in-lb)	±543,000	±451,400	±687,200
RSS bending moment (in-lb)	479,000	722,900	442,000

Table S.4.1.1-1 ISS Limit Load Constraints (continued)

- Module Interfaces (continued):

Node 1/United States (U.S.) Lab: for the U.S. Lab side

	Case 1
Axial load (lb)	±5,980
RSS shear load (lb)	3,200
Torsional moment (in-lb)	±594,900
RSS bending moment (in-lb)	631,500

Node 1/Airlock (A/L): for the A/L side

	Case 1
Axial load (lb)	±750
RSS shear load (lb)	700
Torsional moment (in-lb)	±71,000
RSS bending moment (in-lb)	106,000

Node 1/Node 3: for the Node 3 side

	Case 1
Axial load (lb)	±4,010
RSS shear load (lb)	3,310
Torsional moment (in-lb)	±577,000
RSS bending moment (in-lb)	600,000

Node 2/U.S. Lab: for the U.S. Lab side

	Case 1	Case 2	Case 3	Case 4
Axial load (lb)	±4,010	±1,100	±1,100	±3,038
RSS shear load (lb)	3,310	1,100	1,100	889
Torsional moment (in-lb)	±346,800	±577,000	±346,800	±230,093
RSS bending moment (in-lb)	346,800	346,800	600,000	500,050

Node 1/PMA-1: for the PMA-1 side

	Case 1	Case 2	Case 3
Axial load (lb)	±7,105	±1,330	±1,300
RSS shear load (lb)	3,200	1,705	1,330
Torsional moment (in-lb)	±543,000	±451,400	±687,200
RSS bending moment (in-lb)	479,000	722,900	442,000

Node 1/Permanent Multipurpose Module (PMM)

	Case 1
Axial load (lb)	±4,000
RSS shear load (lb)	3,990
Torsional moment (in-lb)	±500,000
RSS bending moment (in-lb)	442,000

Table S.4.1.1-1 ISS Limit Load Constraints (continued)

- Module Interfaces (continued):

Node 2/U.S. Lab: for the Node 2 side

	Case 1
Axial load (lb)	±4,010
RSS shear load (lb)	3,310
Torsional moment (in-lb)	±577,000
RSS bending moment (in-lb)	600,000

Node 2/PMA-2: for the Node 2 side

	Case 1
Axial load (lb)	±4,010
RSS shear load (lb)	3,310
Torsional moment (in-lb)	±577,000
RSS bending moment (in-lb)	600,000

Node 2/Columbus Orbital Facility (COF)

	Case 1	Case 2	Case 3
Axial load (lb)	±1,300	±1,030	±1,450
RSS shear load (lb)	1,180	1,180	1,180
Torsional moment (in-lb)	±93,700	±84,900	±97,300
RSS bending moment (in-lb)	231,200	231,200	231,200

Node 2/Multipurpose Logistics Module (MPLM)

	Case 1
Axial load (lb)	±2,160
RSS shear load (lb)	2,070
Torsional moment (in-lb)	±245,700
RSS bending moment (in-lb)	349,700

Node 2/Japanese Experiment Module (JEM) Pulse Modulated (PM)

	Case 1	Case 2	Case 3	Case 4
Axial load (lb)	±2,700	±9,170	±1,253	±7,512
RSS shear load (lb)	2,070	840	2,069	1,870
Torsional moment (in-lb)	±245,700	±33,436	±141,748	±72,164
RSS bending moment (in-lb)	440,000	160,634	303,599	102,224

	Case 5	Case 6
Axial load (lb)	±2,664	±2,151
RSS shear load (lb)	1,076	938
Torsional moment (in-lb)	±208,872	±245,607
RSS bending moment (in-lb)	434,170	349,684

Node 3/PMA-3: for the Node 3 side

	Case 1
Axial load (lb)	±4,010
RSS shear load (lb)	3,310
Torsional moment (in-lb)	±577,000
RSS bending moment (in-lb)	600,000

Table S.4.1.1-1 ISS Limit Load Constraints (continued)

- Module Interfaces (continued):

Node 3/Cupola

	Case 1
Axial load (lb)	±2,160
RSS shear load (lb)	2,070
Torsional moment (in-lb)	±245,700
RSS bending moment (in-lb)	349,700

JEM PM/JEM Payload Station (PS)

	Case 1	Case 2	Case 3
Axial load (lb)	±11,370	±1,382	±2,153
RSS shear load (lb)	478	1,617	1,340
Torsional moment (in-lb)	±17,183	±136,135	±130,902
RSS bending moment (in-lb)	65,096	145,711	315,261

JEM PM/JEM Exposed Facility (EF) [(4)]

	Case 1
FX (lb)	±528
FY (lb)	±643
FZ (lb)	±500
MX (in-lb)	±150,958
MY (in-lb)	±106,466
MZ (in-lb)	±156,189

JEM EF Space Environment Data Acquisition (SEDA)/Exposed Facility Unit (EFU)9 or PIU9

	Case 1
Axial load (lb)	±379
RSS shear load (lb)	403
Torsional moment (in-lb)	±41,345
RSS bending moment (in-lb)	62,227

JEM EF Maxi/EFU1 or PIU1

	Case 1
Axial load (lb)	±275
RSS shear load (lb)	275
Torsional moment (in-lb)	±12,498
RSS bending moment (in-lb)	27,254

JEM Interorbit Communications System-Exposed Facility (ICS-EF)/EFU7 or PIU7

	Case 1
Axial load (lb)	±275
RSS shear load (lb)	275
Torsional moment (in-lb)	±12,498
RSS bending moment (in-lb)	27,254

Table S.4.1.1-1 ISS Limit Load Constraints (continued)

- Module Interfaces (continued):

JEM PM/JEM Remote Manipulator System (RMS)

	Case 1	Case 2	Case 3
Axial load (lb)	±146	±66	±65
S1 (lb)	±123	±138	±105
S2 (lb)	±123	±138	±105
Torsional moment (in-lb)	±9,075	±6,960	±16,595
M1 (in-lb)	±9,075	±6,960	±16,595
M2 (in-lb)	±5,115	±5,260	±12,873

- Truss Interfaces

U.S. Lab/Module-to-Truss Structure (MTS) Strut Groups [(4), (5), (6)]

	Case 1
Fx (lb)	±3,175
Fy (lb)	±1,925
Fz (lb)	±4,125
Mx (in-lb)	±3,550
My (in-lb)	±4,900
Mz (in-lb)	±1,350

S0/S1 Truss Structure [(4)]

	Case 1	Case 2	Case 3	Case 4
Axial load (lb)	±2,765	±321	±348	±479
RSS shear load (lb)	260	931	536	432
Torsional moment (in-lb)	±7,362	±53,947	±37,977	±121,710
RSS bending moment (in-lb)	85,053	208,307	641,244	193,401

S0/P1 Truss Structure[(4)]

	Case 1	Case 2	Case 3	Case 4
Axial load (lb)	±2,765	±321	±348	±479
RSS shear load (lb)	260	931	536	432
Torsional moment (in-lb)	±7,362	±53,947	± 37,977	±121,710
RSS bending moment (in-lb)	85,053	208,307	641,244	193,401

P1/P3 Truss Structure[(4)]

	Case 1	Case 2	Case 3	Case 4
Axial load (lb)	±2,928	±437	±363	±388
RSS shear load (lb)	182	2,341	678	394
Torsional moment (in-lb)	±4,023	±13,450	±7,857	±34,172
RSS bending moment (in-lb)	45,467	148,077	375,146	76,086

S1/S3 Truss Structure[(4)]

	Case 1	Case 2	Case 3	Case 4
Axial load (lb)	±2,928	±437	±363	±388
RSS shear load (lb)	182	2,341	678	394
Torsional moment (in-lb)	±4,023	±13,450	±7,857	±34,172
RSS bending moment (in-lb)	45,467	148,077	375,146	76,086

Table S.4.1.1-1 ISS Limit Load Constraints (continued)

- Truss Interfaces (continued):

P3/P4 Truss Structure[4]

	Case 1	Case 2	Case 3
Axial load (lb)	±3,399	±443	±351
RSS shear load (lb)	614	680	481
Torsional moment (in-lb)	±8,668	±51,664	±15,721
RSS bending moment (in-lb)	61,136	152,474	280,442

S3/S4 Truss Structure[4]

	Case 1	Case 2	Case 3
Axial load (lb)	±3,399	±443	±351
RSS shear load (lb)	614	680	481
Torsional moment (in-lb)	±8,668	±51,664	±15,721
RSS bending moment (in-lb)	61,136	152,474	280,442

P4/P5 Truss Structure [7]

	Case 1
FX (lb)	±1,156
FY (lb)	±1,801
FZ (lb)	±447
MX (in-lb)	±97,137
MY (in-lb)	±159,677
MZ (in-lb)	±232,023

S4/S5 Truss Structure [7]

	Case 1
FX (lb)	±1,156
FY (lb)	±1,801
FZ (lb)	±447
MX (in-lb)	±97,137
MY (in-lb)	±159,677
MZ (in-lb)	±232,023

P5/P6 Truss Structure [7]

	Case 1
FX (lb)	±1,086
FY (lb)	±404
FZ (lb)	±297
MX (in-lb)	±29,379
MY (in-lb)	±127,837
MZ (in-lb)	±186,477

Table S.4.1.1-1 ISS Limit Load Constraints (continued)

- Truss Interfaces (continued):

S5/S6 Truss Structure [7]

	Case 1
FX (lb)	±1,086
FY (lb)	±404
FZ (lb)	±297
MX (in-lb)	±29,379
MY (in-lb)	±127,837
MZ (in-lb)	±186,477

P4/Solar Alpha Rotary Joint (SARJ) Extravehicular Activity (EVA) Struts [7]

	Case 1
FX (lb)	±1,657
FY (lb)	±183
FZ (lb)	±202

P4/SARJ Launch Struts [7]

	Case 1
FX (lb)	±660
FY (lb)	±367
FZ (lb)	±993
MX (in-lb)	±200
MY (in-lb)	±358
MZ (in-lb)	±50

S4/SARJ EVA Struts [7]

	Case 1
FX (lb)	±1,657
FY (lb)	±183
FZ (lb)	±202

S4/SARJ Launch Struts (7)

	Case 1
FX (lb)	±660
FY (lb)	±367
FZ (lb)	±993
MX (in-lb)	±200
MY (in-lb)	±358
MZ (in-lb)	±50

- A/L/External Stowage Platform (ESP)2 Structure [4]

A/L Primary Trunnion/ESP2 Universal Trunnion Attachment System (UTAS) (lb)

	Case 1
Fx (lb)	±2,582
Fy (lb)	±760
Fz (lb)	±2,960

Table S.4.1.1-1 ISS Limit Load Constraints (continued)

- A/L/ESP2 Structure[4] (continued):

A/L Bracket/ESP2 Strut

	Case 1
Fx (lb)	±2,544
Fz (lb)	±1,590

A/L Secondary Trunnion/ESP2 UTAS (lb)

	Case 1
Fx (lb)	±3,000
Fz (lb)	±4,148

- Lab/ESP1 Structure

Lab Port Trunnion to ESP1 [4]

	Case 1
Fx (lb)	±1,000
Fy (lb)	±1,000
Fz (lb)	±1,000
Mx (in-lb)	±21,800
My (in-lb)	±16,700
Mz (in-lb)	±21,800

- Integrated Cargo Carrier-Vertical Light Deployable (ICC-VLD)/Payload ORU Accommodation (POA)

	Case 1
RSS Total Force	170
RSS Total Moment	21,060

- Payload Attach System (PAS) and Common Attach System (CAS) [4]

	Case 1	Case 2	Case 3	Case 4
Fx (lb)	±420	±410	±250	±190
Fy (lb)	±40	±50	±640	±100
Fz (lb)	±70	±70	±120	±480
RSSS (lb)	422	413	687	215
Mx (in-lb)	±4,620	±4,770	±51,870	±15,800
My (in-lb)	±32,370	±33,740	±19,620	±14,300
Mz (in-lb)	±6,140	±10,710	±2,610	±3,070
RSSM (in-lb)	32,698	34,076	5,457	21,310

	Case 5	Case 6	Case 7
Fx (lb)	±190	±520	±210
Fy (lb)	±100	±180	±510
Fz (lb)	±490	±90	±10
RSSS (lb)	215	550	552
Mx (in-lb)	±7,780	±14,390	±38,990
My (in-lb)	±14,440	±43,410	±9,200
Mz (in-lb)	±4,370	±18,850	±25,610
RSSM (in-lb)	16,402	45,733	40,061

Table S.4.1.1-1 ISS Limit Load Constraints (continued)

- Heat Rejection System (HRS) [8]

HRS/Orbiter Replacement Unit (ORU)

	Case 1
Fx (lb)	±250
Fy (lb)	±250
Fz (lb)	±250

Thermal Radiator Rotary Joints (TRRJ) – Non rotating side [8]

	Case 1
Fx (lb)	±295
Fy (lb)	±460
Fz (lb)	±500
Mx (in-lb)	±43,000
My (in-lb)	±20,200
Mz (in-lb)	±50,000

- US Integrated Electronic Assembly (IEA) Components:

IEA/Electrical Power System (EPS) Radiator: [9]

	Case 1	Case 2	Case 3	Case 4
Axial Force (lb)	±50	±90	±75	±70
IP Shear Force (lb)	±120	±25	±15	±100
OOP Shear Force (lb)	±60	±110	±110	±45
Torsional Moment (in-lb)	±1,470	±400	±360	±1,620
IP Bending Moment (in-lb)	±39,990	±6,010	±1,480	±36,710
OOP Bending Moment (in-lb)	±4,680	±12,400	±16,720	±3,570

	Case 5
Axial Force (lb)	±85
IP Shear Force (lb)	±110
OOP Shear Force (lb)	±85
Torsional Moment (in-lb)	±1,020
IP Bending Moment (in-lb)	±44,250
OOP Bending Moment (in-lb)	±9,140

IEA/Long Spacer: [10]

	Case 1	Case 2	Case 3	Case 4
Fx (lb)	±1,960	±520	±230	±370
Fy (lb)	±270	±990	±500	±290
Fz (lb)	±220	±10	±1,120	±480
Mx (in-lb)	±17,930	±10,210	±19,430	±71,600
My (in-lb)	±131,000	±61,120	±164,700	±88,660
Mz (in-lb)	±248,500	±204,200	±91,640	±59,580

Table S.4.1.1-1 ISS Limit Load Constraints (continued)

- US IEA Components (continued):

	Case 5	Case 6
Fx (lb)	±550	±650
Fy (lb)	±280	±470
Fz (lb)	±390	±320
Mx (in-lb)	±11,600	±23,790
My (in-lb)	±203,600	±178,500
Mz (in-lb)	±166,500	±269,100

US Photovoltaic (PV) Array Beta Gimbal Assembly (BGA) Canister [11]

	Case 1	Case 2	Case 3	Case 4
Fx (lb)	±60	±15	±45	±15
Fy (lb)	±20	±75	±25	±40
Fz (lb)	±100	±35	±210	±40
Mx (lb)	±9,390	±2,200	±25,400	±27,700
My (lb)	±9,620	±1,090	±9,440	±6,640
Mz (lb)	±3,550	±860	±3,100	±1,550

	Case 5	Case 6
Fx (lb)	±30	±50
Fy (lb)	±10	±45
Fz (lb)	±40	±15
Mx (lb)	±4,180	±10,890
My (lb)	±25,580	±5,980
Mz (lb)	±1,580	±6,660

US PV Array Mast Base longerons loads (L) and Interaction Equation (IEQ) Index:

	Case 1
IEQ $((\|L+121\|)/1050)^2 + (B/26)^2$	1.0
L (lb)	879

Unlocked BGA: [12]

Backdrive Torsion Load (in-lb)	±360
BGA angular rate trip (deg/sec) >	2.0

Bearing Motor and Roll Ring Module (BMRRM) Removal and Replacement (R&R) [13]

BGA/Canister Base RSSM (in-lb)	8,230

- SARJ

SARJ Equivalent Load [14]

	Case 1	Case 2	Case 3	Case 4
Axial Force (lb)	±670	±1,380	±60	±620
FX – Shear Force (lb)	±900	±150	±230	±780
FZ – Shear Force (lb)	±490	±160	±330	±430
MZ – Bending Moment (in-lb)	±82,500	±42,000	±226,700	±83,800
MX – Bending Moment (in-lb)	±117,000	±40,600	±22,400	±211,000
Torsion (in-lb)	±45,100	±8,600	±16,300	±40,600

Table S.4.1.1-1 ISS Limit Load Constraints (continued)

- SARJ (continued):

SARJ Trundle Bars

	Case 1
Axial+Shear (lb)	762

- Node 1 Constraints: (15)

Node 1 zenith port

	Case 1	Case 2
Axial load (lb)	±4,000	±530
RSS shear load (lb)	1,960	1,100
Torsional moment (in-lb)	±82,200	±500,000
RSS bending moment (in-lb)	442,000	250,000

Node 1 starboard port

	Case 1	Case 2
Axial load (lb)	±750	±750
RSS shear load (lb)	700	700
Torsional moment (in-lb)	±71,100	±71,100
RSS bending moment (in-lb)	106,000	106,000

Node 1 port side port

	Case 1	Case 2
Axial load (lb)	±650	±650
RSS shear load (lb)	560	560
Torsional moment (in-lb)	±24,200	±24,200
RSS bending moment (in-lb)	37,400	37,400

Node 1 nadir port

	Case 1	Case 2
Axial load (lb)	±2680	±530
RSS shear load (lb)	3,990	1,100
Torsional moment (in-lb)	±82,200	±500,000
RSS bending moment (in-lb)	442,000	250,000

Node 1 forward port

	Case 1	Case 2
Axial load (lb)	±5,980	±5,980
RSS shear load (lb)	3,200	3,200
Torsional moment (in-lb)	±594,900	±594,900
RSS bending moment (in-lb)	631,500	631,500

Table S.4.1.1-1 ISS Limit Load Constraints (continued)

- Node 1 Constraints (continued):

Node 1 aft port

	Case 1	Case 2
Axial load (lb)	±4,410	±4,410
RSS shear load (lb)	3,000	3,000
Torsional moment (in-lb)	±687,200	±687,200
RSS bending moment (in-lb)	772,900	772,900

- Pressure Constraints

	Normal	Shear
RS Modules (psf)	3.42	0.80
FGB Tug (psf)	6.70	0.80
FGB Radiators (psf)	3.80	0.23
FGB PV Arrays (psf)	0.31	0.20
SM PV Arrays (psf)	0.31	0.20
Soyuz PV Arrays (psf)	0.70	0.06
Progress PV Arrays (psf)	0.70	0.06
US PV Arrays (psf)	3.42	0.80
US IEA Radiators (psf)	3.42	0.80
US Modules (psf)	3.42	0.80
Truss/Shroud (psf)	3.42	0.80
US HRS Radiators (psf)	3.42	0.80
COF (psf)	3.42	0.80
JEM ELM PS (psf)	3.42	0.80
JEM PM (psf)	3.42	0.80
JEM EF (psf)	3.42	0.80
JEM ES (psf)	3.42	0.80

Notes:
1) Load constraint values are for single occurrence maximum loads.
2) Load constraints for pressurized interfaces assume maximum internal pressure. If the pressurized interface is unpressurized, the loads constraints are not lower than the pressurized load constraints.
3) Constraints apply for any location of the Soyuz or Progress module: FGB nadir, DC1 nadir, or SM aft.
4) X, Y, and Z components of the forces and moments are defined with respect to the Space Station Analysis Coordinate System (SSACS) defined in SSP 30219.
5) Strut group loads envelope pertinent strut loads acting concurrently in all possible combinations at each MTS strut group fitting to US Lab interface.
6) The application point for each MTS strut group load is defined as the centroid of the four corner bolts of each strut group mounting plate.
7) The P4/SARJ and S4/SARJ strut loads are defined with the X-axis along the truss (parallel to the Y-axis of the SSACS defined in SSP 30219), the –Y axis parallel to the EPS radiator, and the Z-axis parallel to the US PV array mast.
8) Loads are defined with the X-axis parallel along the truss (parallel to the Y-axis of the SSACS defined in SSP 30219), the Y-axis in the SSACS Z direction, and the Z-axis in the SSACS X direction.
9) The IEA/EPS Radiator Shear, Axial, Bending Moment and Torsion loads are defined with respect to the radiator plane.

Table S.4.1.1-1 ISS Limit Load Constraints (concluded)

10) The IEA/Long Spacer loads are the total resultant coupled loads applied to the geometric center of the interface defined with respect to a coordinate system in which the -Y-axis runs along EPS forward radiator, the Z-axis runs along the PV mast, and the X-axis completes the right-hand rule.
11) X, Y, and Z components of the forces and moments for the BGA constraints are defined with X along the truss, -Y in the direction of the EPS radiator, and Z along the PV array mast.
12) If a torque on the unlocked BGA exceeds the backdrive torsion load, the BGA motor will not be damaged, but will turn backwards. After beginning to turn, if the angular rate exceeds 2.0 deg/sec for a single 0.32 second sample period, a firmware implemented trip will occur and the current to the BGA will automatically be powered off. If the angular rate exceeds 2.0 deg/sec for 6.0 seconds, a software implemented trip will occur.
13) This constraint applies when the BMRRM vise clamp is disengaged. The US PV arrays must be rotated to zero degrees during this event.
14) Shear forces FX and FZ and bending moments MX and MZ refer to the X-axis and Z-axis of the SSACS defined in SSP 30219.
15) There are two limit load cases for the Node 1. For each case, the interface limit loads defined for all Node 1 ports should be applied simultaneously at their worst case combinations.
16) There are two limit load cases for the Node 1. For each case, the interface limit loads defined for all Node 1 ports should be applied simultaneously at their worst case combinations.

Table S.4.1.1-2 ISS Mated Interface Load Constraints at ISS to Shuttle Interface

	Case 1	Case 2	Case 3	Case 4
Axial (lb)	±1,100	± 1,100	± 3,970	± 3,080
RSS Shear (lb)	1,100	1,100	3,310	3,740
Torsion (in-lb)	±577,200	±346,800	±346,800	±303,800
RSS Bending (in-lb)	346,800	577,200	346,800	607,600

Notes:
1) Loads are given in the Shuttle structural coordinate system as defined in SSP 30219.
2) Load constraints for pressurized interfaces assume maximum internal pressure. If the pressurized interface is unpressurized, the load constraints are not lower than the pressurized load constraints.
3) All loading components shall apply concurrently in any combination of positive and negative values.
4) The above load constraints are applicable to the ISS side of the interface.

Table S.4.1.1-3 APAS Limit Load Constraints at FGB/PMA-1 Interface

	Case 1	Case 2	Case 3
Number of hooks closed	24	24	24
Axial (lb)	±1,300	±1,300	±4,410
RSS Shear (lb)	1,330	1,330	3,000
Torsion (in-lb)	±376,000	±662,000	±434,000
RSS Bending (in-lb)	688,000	442,000	434,000

Notes:
1) The above represent single occurrence maximum load constraints on an ISS APAS for full pressurization of 16 psi.
2) All loading components shall be applied simultaneously at the origin of the X', Y', Z' coordinate system, located at the center of the mating plane (X'Y'), with the mating ring in the retracted position.
3) Shear is the vector sum of F_X' and F_Y'. Axial is in the F_Z' direction. Bending is vector sum of M_X' and M_Y'. Torsion is M_Z'.

Table S.4.1.1-4 Probe and Cone Docking Mechanism Limit Load Constraints

	Case 1	Case 2	Case 3	Case 4	Case 5	Case 6
Sets of hooks closed	1	2	2	2	1	1
Clamp Installed	Yes	Yes	No	No	No	No
Vestibule Pressure (psi)	18.5	18.5	0.0	18.5	0.0	18.5
Axial (lb)	±2,200	±2,200	±1,100	±2,200	±1,100	±660
RSS Shear (lb)	2,200	2,200	1,100	2,200	1,100	1,100
Torsion (in-lb)	±217,000	±217,000	±130,000	±217,000	±130,000	±43,400
RSS Bending (in-lb)	304,000	434,000	521,000	243,000	200,000	26,000

Notes:
1) The above represent single occurrence maximum load constraints on any Soyuz/Progress docking mechanism and the corresponding docking mechanisms at the SM aft, FGB nadir, and DC1 nadir locations.
2) All loading components shall be applied simultaneously.
3) If one parameter exceeds the value indicated in the table, its acceptability is considered per case.
4) Acceptable loads are given without temperature and structural deformations.
5) Nominal procedure for a manned ISS will be to close one set of hooks at the interface and install clamps, so Case 1 shall apply.
6) Nominal procedure for an unmanned ISS will be to close two sets of hooks, because clamps cannot be installed. The vestibule would be pressurized, so Case 4 shall apply.

Table S.4.1.4-1 Total Hardware Certification Fatigue Load Spectra Constraints

Component	Case[1]	2.5-5%	5-10%	10-15%	15-20%	20-30%	30-40%	40-50%	50-60%	60-70%	70-80%	80-90%	90-100%
FGB/PMA-1 24 hook APAS	1-2 [2]	5.0e6	5.0e6	2.0e5	5.0e4	5.0e4	2.2e4	2,000	1,000	200	100	50	10
ISS/Shuttle I/F 12 hook APAS	1-2 [3]	1.0e7	6.5e6	7.5e5	1.0e5	8.0e4	4.0e4	7,000	1,000	700	100	50	10
Node 1 Zenith	1	6.5e6	5.1e5	3.7e5	9.81e4	1.96e4	2,750	2,780	2,410	1,100	987	47	1
	2	6.5e6	5.1e5	3.7e5	9.81e4	1.96e4	2,000	940	170	110	113	47	61
Node 1 Starboard	1	1.4e7	4.3e6	2.7e6	8.86e4	1.96e4	2,000	940	170	110	113	47	61
Node 1 Port	1	5.3e6	4.8e4	300	300	300	100	0	0	0	0	0	1
Node 1 Nadir	1	2.0e6	3.8e5	8.0e4	4.0e4	6.1e4	4.9e4	5,400	4,700	1,160	100	50	20
	2	1.1e6	2.8e5	4.4e4	5.2e4	8.86e4	4.79e4	500	500	470	880	1,400	1
Node 1 Forward	1	1.1e7	4.4e6	9.9e5	2.0e5	1.06e5	5.64e4	2.04e4	8,030	2,440	1,840	48	3
Node 1 Aft	1-2	2.0e7	1.6e7	4.1e6	3.5e5	2.21e5	5.0e4	2.64e4	8,700	2,230	630	150	25
FGB/SM Interface	1	5.0e6	5.0e6	2.0e5	5.0e4	5.0e4	2.2e4	2,000	1,000	200	100	50	10
SM Aft	1-2	8.0e6	2.5e6	5.4e5	1.3e5	1.6e4	1,400	600	250	140	80	40	15
SM PV Array Drive	1	1.41e8	6.66e7	2.56e7	7.7e6	2,400	1,500	1,350	1,200	900	750	600	300
IEA/Long Spacer I/F	1-6	2.1e6	2.2e6	2.1e5	1.1e5	6.27e4	5.76e4	3.84e4	2,020	380	220	60	2
N1/Z1 (Z1 Side)	1	2.8e5	5.9e5	2.9e4	5,780	2,030	260	170	70	20	20	1	1
Z1/P6 I/F	1	5.1e5	7.8e5	1.72e4	7,330	2,250	550	270	170	80	40	8	2
IEA/EPS I/F	1-6	1.4e6	2.5e6	3.0e5	1.0e5	1.88e5	1.15e5	1.01e5	4,840	3,010	1,600	940	24
PV Array Blanket Membrane	1	7.10e5	2.70e5	1.33e5	1.87e5	9.25e4	8.89e4	2.49e4	2,110	160	110	8	2
Node 1/U. S. Lab (Lab Side)	1	1.10e7	4.40e6	9.90e5	2.00e5	1.06e5	5.64e4	2.04e4	8,030	2,440	1,840	48	3
U. S. Lab/PMA-2	1-3	1.99e7	1.60e7	3.88e6	3.50e5	2.21e5	3.93e4	1.44e4	6,990	2,230	630	150	25
Node 1/ A/L Side	1	1.37e7	4.26e6	2.66e6	8.86e4	1.96e4	2,000	940	170	110	113	47	61
Node 2/MPLM (MPLM Side)	1	1.11e6	4.56e5	1.91e5	9.24e4	2.27e4	2,630	990	530	150	22	5	1
U. S. Lab/ MTS Strut	1	1.50e6	8.20e5	1.30e5	3.80e4	7.10e4	5.70e4	3.20e4	9,900	2,300	530	2,200	4
S0/S1		1.06e7	2.73e6	4.58e5	7.58e4	1.75e4	4,019	1,168	332	171	37	10	12
S0/P1		1.06e7	2.73e6	4.58e5	7.58e4	1.75e4	4,019	1,168	332	171	37	10	12
P1/P3		4.14e6	2.56e6	1.31e5	1.52e5	6.71e4	9,610	580	85	16	6	2	1
P4/SARJ Launch Struts		9.78e6	1.87e6	2.44e5	4.26e4	1.27e4	889	244	201	197	197	196	6
P4/SARJ EVA Struts		1.76e6	6.19e5	5.08e4	8,846	4,317	501	38	18	14	10	2	0

Notes:

1) Amplitude bins refer to the percent of the limit loads given in Table S.4.1.1-1 unless otherwise noted.
2) FGB/PMA-1 interface, 24 hook APAS bins are referenced to the loads in cases 1 and 2 of Table S.4.1.1-3. ISS/Shuttle interface, 12 hook APAS bins are referenced to the loads in cases 1 and 2 of Table S.4.1.1-2.

S.4.2 Structural Loads Requirements
Documented in Appendix S of NSTS-21000-IDD-ISS.

S.4.2.1 Shuttle Approach and Separation Plume Impingement Loads
Documented in Appendix S of NSTS-21000-IDD-ISS.

S.4.2.1.1 ISS Configurations and Models
The analysis for each phase will apply to the pertinent ISS configuration documented in JSC 26557, International Space Station Configuration Sequence. The ISS surface geometry models for plume impingement analysis are documented in Section S.4.3.2.1 for Shuttle approach and separation. Figures S.4.3.2.1-1 and S.4.3.2.1-2 show the approach and separation configurations.

All ISS solar arrays are capable of rotating from 0° to 360° about the BGA and from 0° to 360° about the SARJ. The Russian solar arrays may be stopped at 22.5° increments.

Tables S.4.2.1.1-1 and S.4.2.1.1-2 document the ISS solar array angles and TRRJ angles selected for analysis of proximity operations.

The BGA for the US PV arrays will be latched if analysis shows that loads may exceed the limit load constraints for any BGA angle for the planned SARJ position. Otherwise the arrays will remain unlatched throughout proximity operations.

ISS solar array angles may be positioned at angles other than those listed in Tables S.4.2.1.1-1 and S.4.2.1.1-2, but the arrays shall not be positioned in a structural keep-out zone.

Each SM solar array has a hardstop, a region through which the array is physically unable to rotate. Table S.4.3.2.1-1 documents the location of the hardstops.

The ISS structural models are documented in section S.4.3.2.2. ISS math models up to 10 Hz will be used in the analysis. The applied damping for plume impingement loads analysis shall not be greater than 1.0 percent of critical damping for all ISS system modes up to 10 Hz. ISS mass properties data are documented in JSC 26557.

S.4.2.1.2 Plume Impingement Loads Analysis Criteria
Documented in Appendix S of NSTS-21000-IDD-ISS.

S.4.2.1.2.1 Proximity Operations Shuttle Jet History Databases
Documented in Appendix S of NSTS-21000-IDD-ISS.

S.4.2.1.2.2 Analysis Uncertainties
Documented in Appendix S of NSTS-21000-IDD-ISS.

S.4.2.1.2.3 Plume Impingement Forcing Function Description
Documented in Appendix S of NSTS-21000-IDD-ISS.

S.4.2.1.2.4 Loads and Pressures Calculations
Documented in Appendix S of NSTS-21000-IDD-ISS.

S.4.2.1.2.5 Load Combinations
Documented in Appendix S of NSTS-21000-IDD-ISS.

S.4.2.1.2.6 Load Spectra
Documented in Appendix S of NSTS-21000-IDD-ISS.

S.4.2.1.3 ISS Limit Load Constraints
Limit load constraints at ISS component interfaces are given in Tables S.4.1.1-1, S.4.1.1-3, and S.4.1.1-4. Component normal and shear pressure constraints are also documented in Table S.4.1.1-1.

S.4.2.2 ISS/Shuttle Docking Loads
Documented in Appendix S of NSTS-21000-IDD-ISS.

S.4.2.2.1 ISS Math Models and Damping
ISS structural math models, as documented in Section S.4.3.2, shall be used for ISS docking loads analysis. ISS math model modes up to 10 Hz shall be used in the loads analysis. The ISS solar array configurations are as documented in Section S.4.2.1.1. The damping for docking and plume impingement loads analysis shall not be greater than 1.0 percent of critical damping for ISS system modes up to 10 Hz.

S.4.2.2.2 Shuttle Math Models
Documented in Appendix S of NSTS-21000-IDD-ISS.

S.4.2.2.3 Docking Forcing Functions
Documented in Appendix S of NSTS-21000-IDD-ISS.

S.4.2.2.4 Uncertainties
Documented in Appendix S of NSTS-21000-IDD-ISS.

S.4.2.2.5 Loads Calculations
Documented in Appendix S of NSTS-21000-IDD-ISS.

S.4.2.2.6 Loading Combinations
Documented in Appendix S of NSTS-21000-IDD-ISS.

S.4.2.2.7 Load Spectra
Documented in Appendix S of NSTS-21000-IDD-ISS.

S.4.2.2.8 ISS Limit Load Constraints
Limit load constraints at ISS component interfaces are given in Tables S.4.1.1-1, S.4.1.1-3, and S.4.1.1-4.

S.4.2.2.9 Shuttle Limit Load Constraints
Documented in Appendix S of NSTS-21000-IDD-ISS.

S.4.2.3 Mated Flight Loads
Documented in Appendix S of NSTS-21000-IDD-ISS.

S.4.2.3.1 Shuttle/ISS Configurations and Models

The analysis for each phase of mated flight will apply to the pertinent configurations documented in JSC 26557. The ISS surface geometry models for plume impingement analysis are shown in Section S.4.3.2.1. The solar array angles will be positioned as defined in Table S.4.2.3.1-1 for all mated analysis. The mated ISS/Shuttle structural models are documented in Section S.4.3.2.2. Math models will have a cutoff frequency of 10 Hz, except for Orbiter RMS berthing models which will have a 20 Hz frequency cutoff. For loads assessments, 1.0 percent of critical damping will be applied. ISS/Shuttle mass properties data are documented in JSC 26557.

S.4.2.3.1.1 Shuttle/ISS Dynamics Model Uncertainties for Shuttle Flight Control

Documented in Appendix S of NSTS-21000-IDD-ISS.

S.4.2.3.1.2 Shuttle/ISS Dynamics Model Uncertainties for ISS Flight Control

Documented in Appendix S of NSTS-21000-IDD-ISS.

S.4.2.3.2 Mated Attitude Hold and Maneuvering Loads Criteria

S.4.2.3.2.1 Shuttle Reaction Control System (RCS) Forcing Functions

S.4.2.3.2.1.1 Attitude Hold and Maneuvering

For the docked vehicle loads analysis, open loop Shuttle Vernier Reaction Control System (VRCS) and Alternate (ALT) Primary Reaction Control System (PRCS) mode forcing functions shall be developed to maximize loads response within the limits of the Shuttle Flight Control System (FCS). These forcing functions shall be tuned in a manner to envelope potential loading caused by the Shuttle closed loop FCS. Both VRCS control and ALT PRCS Low Z with X control are certified for use during mated operations. Shuttle nose Y jets will be inhibited for all Shuttle/ISS mated attitude control. The control system parameters for VRCS and ALT PRCS for attitude hold and attitude maneuvers are documented in Table S.11.1.4.2.1-1. Final jet firing separation or delay times shall be determined based on evaluations of docked vehicle loads and control stability analyses.

The number of pulses for each load maximizing ALT PRCS case shall be based on control system parameters, the period of the driven system modes, and the time required to achieve steady state response. The pulse sequences shall be tuned within the limits of the minimum delay time to excite mated vehicle vibrational modes that are significant to individual load items. An uncertainty of ±20% on mated system modal frequencies will be assumed for loads analysis when selecting the delay times. VRCS loads maximizing cases shall be based on the period of the driven system modes, the jet rotational acceleration, the flight control Rate Limit (RL), the Maneuver Rate (MR), and the minimum delay time.

The RCS forcing functions shall be applied to the Shuttle math model degrees of freedom representing the RCS jet locations and thrust directions. Space Shuttle Program (SSP) shall provide Shuttle/ISS forcing functions to International Space Station Program (ISSP) based on the above analysis for use in calculating ISS internal loads.

Open loop synthetic forcing functions for the ALT PRCS and VRCS Digital Auto Pilot (DAP) on-orbit control modes are used for the Shuttle RCS loads analyses. Figures S.4.2.3.2.1.1-1 and

S.4.2.3.2.1.1-2 depict the standard ALT PRCS mode open loop forcing functions unipolar and bipolar pulse sequences for commanded attitude maneuvers. The unipolar forcing functions are representative of the beginning and completion of a commanded attitude maneuver. The bipolar forcing functions are designed to envelope control system responses for a commanded attitude maneuver. The number of pulses is based on DAP parameters and the mated vehicle mass properties.

The intervals in the pulse sequences (Td_i) vary based on a set of 10 scale factors which are applied to the target delay time (Td). The DAP steps through this set of scale factors and repeats the sequence as needed. A frequency sweep approach shall be used to account for the structural model frequency uncertainty of +/- 20%.

Figure S.4.2.3.2.1.1-3 depicts the VRCS attitude maneuver forcing function and the equations that determine the pulse duration. The durations of the pulses depend on the DAP RL, MR, and the rigid body angular acceleration (α_i). A total of four bipolar VRCS pulses shall be assessed for attitude control.

Synthetic forcing functions to represent PRCS attitude hold jet firings shall be used for loads assessment and load combination. The firing patterns are similar to maneuver criteria unipolar firings, with the exception that the rate change, and hence the number of firings, is smaller and a drift time, which depends on control system parameters and mated vehicle mass properties, separates the sequences of unipolar firings. Again, two types of patterns are defined: one-sided limit cycle firing, which represents control system performance in the presence of a constant disturbance torque, and two-sided limit cycle firing, which is representative of attitude hold about a Torque Equilibrium Attitude (TEA). These pulse trains are depicted in Figures S.4.2.3.2.1.1-4 and S.4.2.3.2.1.1-5. Bipolar firings for single axis commands are retained as in the maneuver criteria.

The criteria specify the jets firing, number of pulses, and minimum drift time. For each of the unique jet combinations identified, time histories of jet firings are constructed for one-sided and two-sided patterns. In addition, sets of bipolar firings are defined for single-axis maneuvers. For two-sided cases where the number of firings specified for opposing directions is different, the larger number of pulses shall be used for each direction. For each of the forcing functions defined, the DAP delay between individual jet firings shall be varied to maximize the ISS interface load responses subject to the minimum ALT PRCS delay time constraint.

The VRCS and ALT PRCS forcing functions are limited to those generated by the acceptable control configurations described in JSC 26557. Jet tables of the integer roll, pitch, and yaw rotational commands are assessed for all jet combinations to bound the maneuver space. Specific jet tables, shown in Tables S.4.2.3.2.1.1-1 through S.4.2.3.2.1.1-6 are derived for the mated Shuttle/ISS configuration. The forcing functions are then applied to the STS math model degrees of freedom representing the selected RCS thrusters.

S.4.2.3.2.1.2 Shuttle Reboost of ISS

The Shuttle will have the capability to perform a reboost of the mated Shuttle/ISS stack using automatic reboost software. The reboost is available only if the Orbiter Docking System (ODS) is pressurized to 3.45 psi or greater.

The Shuttle RCS forcing functions for nominal mated automatic reboost loads analysis shall be designed to represent the scenario depicted in Figure S.4.2.3.2.1.2-1. Note that the jet firings in the translation phase may consist of PRCS or VRCS. If PRCS is used for the translation phase, ALT PRCS will be used for the rotational control phase. If VRCS is used for the translation phase, VRCS will also be used for the rotational control phase. For the purpose of determining maximum VRCS reboost loads, the translation and rotation phases are evaluated separately and maximum responses from each phase are added in a peak-to-peak fashion. For the purpose of determining maximum expected loads for any reboost option that uses primary jets, the maximum of the translation and rotation phases are evaluated separately and the higher of the two are used.

For the rotational control period, maximum responses are determined based on either the unipolar PRCS or VRCS maneuver criteria, as appropriate, as described in Section S.4.2.3.2.1.1. For translation phase loads, unipolar pulses of the appropriate reboost firing jet combination are tuned in a manner similar to the unipolar PRCS maneuver criteria. An uncertainty of +/-20% on mated system modal frequencies will be assumed for loads calculation for both phases. Available reboost software configuration options are documented in Table S.11.1.4.2.3.1-2.

In addition to nominal reboost operations, an off-nominal situation in which the FCS commands frequent, repetitive transitions between translation and rotation control modes, shall be considered for reboost configurations which use PRCS jets for translation. The forcing function profile for the limiting case of this behavior, termed "mode cycling", is depicted in Figure S.4.2.3.2.1.2-2.

Synthetic forcing functions for reboost mode cycling assessment shall be defined by a translation firing (per the reboost configuration), followed by a rotation firing (VRCS or ALT PRCS depending on the DAP rotation configuration), repeated for a number of cycles. Rotation control firings in any of the 26 directions identified in the rotation control jet table, shown in Table S.4.2.3.2.1.1-2 shall be considered. The translation and rotation firings may align to the period of system modes in either a bipolar or unipolar sense, subject to the transition delays and firing completion constraints. Forcing functions shall therefore be tuned to mated system modal frequencies within the bounds of a +/-20% uncertainty about these delays. The duration of the rotation firings shall be either T/2 for VRCS rotation control or the ALT DAP on-time for PRCS rotation control. The number of mode cycles considered shall be sufficient for system response to achieve steady-state.

Peak loads for reboost mode cycling for each reboost configuration shall be identified as the maximum responses over all rotation control jet firing patterns considered. Overall bounding loads for automated reboost shall be defined as the maximum of the responses for nominal reboost and the responses for mode cycling.

S.4.2.3.2.1.3 Reserved

S.4.2.3.2.1.4 Reserved

S.4.2.3.2.1.5 Shuttle RCS Jet Failed-On
Documented in Appendix S of NSTS-21000-IDD-ISS.

S.4.2.3.2.2 Shuttle RCS Plume Impingement Loading
Documented in Appendix S of NSTS-21000-IDD-ISS.

S.4.2.3.2.3 Shuttle RCS Uncertainty Factors
Documented in Appendix S of NSTS-21000-IDD-ISS.

S.4.2.3.2.4 ISS Attitude Control System (ACS) Control

S.4.2.3.2.4.1 Forcing Functions During Control Using ISS Russian System (RS) Motion Control System (MCS) Jets
Table S.4.2.3.2.4.1-1 documents the SM and Progress thrusters that will be used for arbitrary maneuvers and the torques and angular accelerations generated by them for various mated configurations. Pitch and yaw control can be provided by either the Progress mid-ring jets (baseline) or the SM "T" and "P" jets. Roll control can be provided by either the mid-ring jets of the Progress mounted on the DC1 nadir port (baseline) or both manifolds of the SM "K" jets. Figures S.4.2.3.2.4.1-1 through S.4.2.3.2.4.1-6 show the timeline for an arbitrary maneuver of the mated stack controlled by the SM or Progress thrusters. Figure S.4.2.3.2.4.1-7 shows the timeline for attitude hold. Figure S.4.2.3.2.4.1-8 represents a generic forcing function for ISS attitude control using SM and Progress ACS thrusters during Shuttle Remote Manipulator System (SRMS) or Space Station Remote Manipulator System (SSRMS) operations. Table S.4.2.3.2.4.1-1 documents the corresponding torques and angular accelerations for the payload translation.

S.4.2.3.2.4.2 Reserved

S.4.2.3.2.4.3 ISS Conrol Moment Gyro (CMG) Disturbance Torques for Loads Assessments

S.4.2.3.2.4.3.1 ISS CMG Spin-up or Spin-down
Documented in Appendix S of NSTS-21000-IDD-ISS.

S.4.2.3.2.4.3.2 ISS CMG Control with Thrusters Inhibited
Documented in Appendix S of NSTS-21000-IDD-ISS.

S.4.2.3.2.4.4 ISS CMG Desaturation Using ISS Jets
During Momentum Manager (MM) control of the mated vehicles, CMG desaturations using SM thrusters or SM/Progress thrusters may occur as a result of momentum disturbances, changes to the TEA due to a large configuration change, or during the mode initiation transient. For every MM mode, the desaturation threshold is 90% of CMG capacity for 3 or 4 CMGs. The amount of desaturation is 17% for 4 CMGs and 22% for 3 CMGs, which results in approximately the same momentum command to the thrusters of 2200 ft-lb-sec. Tables S.4.2.3.2.4.4-1 through S.4.2.3.2.4.4-2 show the possible thruster on-times for desaturations using SM thrusters and Progress thrusters, respectively.

S.4.2.3.2.4.5 ISS CMG US Thrusters Only (USTO)
During mated operations while the ISS is in USTO mode, the RS thruster firings will occur on a regular basis as a result of environmental disturbances. The thruster firings described in Figure S.4.2.3.2.4.5-1 document an attitude hold at (0,0,0) Yaw Pitch Roll (YPR), and will be conservative if used for attitude holds near the TEA.

During attitude maneuvers, the USTO thruster firings will occur using jets documented in Table S.4.2.3.2.4.1-1. The forcing functions are documented in Figures S.4.2.3.2.4.5-2 through S.4.2.3.2.4.5-8.

S.4.2.3.2.4.6 ISS ACS Uncertainty Factors
Documented in Appendix S of NSTS-21000-IDD-ISS.

S.4.2.3.2.4.7 ISS CMG Attitude Control Contingency Deactivation
Documented in Appendix S of NSTS-21000-IDD-ISS.

S.4.2.3.2.5 Loads Due to Shuttle Venting
Documented in Appendix S of NSTS-21000-IDD-ISS.

S.4.2.3.2.6 Loads Due to ISS Venting
Documented in Appendix S of NSTS-21000-IDD-ISS.

S.4.2.3.3 Intravehicular Activity (IVA) and EVA Loading
Documented in Appendix S of NSTS-21000-IDD-ISS.

S.4.2.3.3.1 Forcing Functions
Documented in Appendix S of NSTS-21000-IDD-ISS.

S.4.2.3.3.2 Uncertainties
Documented in Appendix S of NSTS-21000-IDD-ISS.

S.4.2.3.3.3 Reserved

S.4.2.3.4 SRMS and SSRMS Loads

S.4.2.3.4.1 SRMS Berthing
Documented in Appendix S of NSTS-21000-IDD-ISS.

S.4.2.3.4.2 SRMS Handling Forcing Functions
Documented in Appendix S of NSTS-21000-IDD-ISS.

S.4.2.3.4.3 SSRMS Berthing
Documented in Appendix S of NSTS-21000-IDD-ISS.

S.4.2.3.4.4 SSRMS Handling Forcing Functions
Documented in Appendix S of NSTS-21000-IDD-ISS.

S.4.2.3.4.5 Uncertainties
Documented in Appendix S of NSTS-21000-IDD-ISS.

S.4.2.3.5 Docking and Undocking of Soyuz/Progress Vehicles
Flight specific analyses for STS-134/ULF-6 Russian vehicle docking and undocking loads for Dual Docked Operations (DDO) were performed. The analyses included calculations of peak loads and accelerations at the ISS and Orbiter to ISS interfaces. The Russian vehicle forcing function inputs used to develop these loads are documented below. The peak docking and undocking loads are documented in the Boeing "VAC ULF6 Integrated On-Orbit Loads & Dynamics Structural Loads Report", EID684-14474 and in Boeing memo "Flight ULF-6 Dual Docked Loads for 26S Docking and 25S Undocking", EID684-14534.

Plume impingement effects on the Orbiter-mated ISS configuration due to Russian vehicle approach and separation are documented in Boeing memo, "Analysis of Russian Vehicle Approach and Separation Plume Pressures for ULF-4 Orbiter-Mated ISS," EID684-14147. This memo documents the latest plume impingement for nominal Russian vehicle approach to and separation from the Orbiter-mated ISS.

Jet plume environments and interaction for Russian vehicle jet firings were assessed and documented in memo "Dual and single jet plume environments from Soyuz and Progress vehicle operations to be used for Orbiter/ISS DDO analyses," EG-DIV-10-23. This memo documents the plume interaction amplification factor for a dual jet pair as well as the single Soyuz jet plume environment. Based on the data documented in this memo, off-nominal plume pressure cases were developed and listed in Table S.4.2.3.5-1. These cases are meant to capture an off-nominal case where a dual jet pair would point directly at the mated Orbiter Payload Bay Door (PLBD) or Payload Bay (PLB), and assumes that the plume interaction amplification factor is applicable. The distance from the jet was determined using a 15 degree approach/separation corridor (abort corridor) and the closest distance to an available Russian vehicle docking port.

Table S.4.2.3.5-1 Off-Nominal DDO Peak Plume Pressures

Orbiter Component	Peak Pressure (psf)*
Payload Bay	0.0088
Payload Bay Door	0.014

* dual jet plume amplification factor of 1.634 used

S.4.2.3.5.1 Soyuz/Progress Vehicle Docking Loads During Mated Flight
Flight ULF6 Russian vehicle docking forcing functions for DDO were generated by RSC-Energia and delivered to NASA-Structural Engineering Division (ES). The forcing functions are derived by RSC-Energia in the same manner as the stage Russian docking forcing functions documented in Boeing report EID 684-14474. However, the mass properties used for DDO analysis reflect an Orbiter attached to the ISS.

S.4.2.3.5.2 Soyuz Vehicle Undocking Loads During Mated Flight
Flight ULF6 Russian vehicle undocking forcing functions for DDO are those documented in EID 684-14474. The forcing function inputs are the same as those used for Russian vehicle

undocking for stage analysis. However, the mass properties used for DDOs analysis reflect an Orbiter attached to the ISS.

S.4.2.3.5.3 Soyuz/Progress Clearances from Shuttle During Docking or Undocking
Documented in Appendix S of NSTS-21000-IDD-ISS.

S.4.2.3.5.4 Russian Vehicle Approach and Separation Plume Impingement Trajectory Inputs
Flight ULF4 Russian vehicle plume impingement trajectory inputs for DDO are documented in EID 684-13948. The trajectory inputs or cases are the same as those used for Russian vehicle approach and separation for stage analysis.

S.4.2.3.6 Loading Combinations
Documented in Appendix S of NSTS-21000-IDD-ISS.

S.4.2.3.7 Load Spectra
Documented in Appendix S of NSTS-21000-IDD-ISS.

S.4.2.3.8 Limit Load Constraints
Limit load constraints at ISS component internal interfaces and the ISS/Shuttle docked interface are documented in Tables S.4.1.1-1 through S.4.1.1-4. Limit load constraints for the Orbiter side of the Orbiter/ISS interface are documented in Appendix S of NSTS-21000-IDD-ISS.

S.4.2.3.9 Operational Constraints
Operational constraints and groundrules that affect loads analyses or are required for acceptable loads during docked operations are given in Section S.11.1.4. The operational constraints specified below in this section are applicable during all phases of docked flight unless otherwise specified.

Table S.4.2.3.9-1 documents operational constraints regarding locking the port and starboard SARJs that are specific to EVA events planned during mated operations.

S.4.2.3.9.1 General Operational Constraints
The following constraints apply to all mated configurations unless otherwise noted. Refer to Table S.4.2.3.9-1 for details regarding attitude control constraints driven by SARJ locking requirements during specific EVA events.

a. Translation of the mated vehicle is prohibited, except for the purpose of Shuttle reboost of ISS as described in S.4.2.3.2.1.2 or Shuttle collision avoidance maneuvers.

b. An ODS A/L pressure of 3.45 psi or greater is required before initiating an automatic Shuttle reboost of ISS.

c. During mated operations, use of all Shuttle forward side-firing PRCS jets (FxL and FxR) and all forward up-firing jets (FxU) is prohibited.

d. During mated operations, Shuttle Orbital Maneuvering System (OMS) jet firings are prohibited.

e. During mated operations Shuttle 2-jet and 3-jet ALT PRCS control modes are prohibited.

f. Shuttle ALT PRCS control is prohibited during SSRMS translation of the ExPRESS Logistics Carrier 3 (ELC-3) or Alpha Magnetic Spectrometer (AMS).

g. Shuttle ALT PRCS control is prohibited during SRMS translation of the ELC-3 or AMS.

h. Shuttle ALT PRCS control is prohibited during EVA.

i. ATV thruster use is prohibited during EVA.

j. Progress Rendezvous and Docking (R&D) thruster use is prohibited.

k. During Shuttle ALT PRCS control or PRCS reboost, the ISS PV arrays must be feathered and latched and both SARJs must be locked.

l. RS MCS and USTO attitude maneuvers and thruster firings to recover from free drift or loss of attitude control are prohibited during EVA with either SARJ unlocked.

m. Loss of Attitude Control (LoAC) recovery and handover maneuvers with RS MCS and USTO control are allowed during EVA only if both SARJs are locked and:

   1. EVA crewmembers are in Articulating Portable Foot Restraints (APFRs)

   2. EVA crewmembers are not on ESP-3, ELC-1, ELC-2, ELC-4, or JEM EF

n. Positioning US PV arrays in a keep-out-zone during mated operations is prohibited.

S.4.2.3.9.2 IVA/EVA Constraints

The following sections describe the ISS/Shuttle docked system phase operational constraints on crew activity.

S.4.2.3.9.2.1 General IVA Constraints

The following constraints apply during any mated configuration unless otherwise noted. Refer to Table S.4.2.3.9-1 for details regarding IVA constraints driven by SARJ locking requirements during specific EVA events.

a. Orbiter unisolated treadmill and rower ergometer use are prohibited.

b. Alternative ergometer exercise using the Shuttle cycle ergometer for resistive exercise or sit-ups is prohibited.

c. ISS unisolated exercise is prohibited, except for the SM cycle ergometer.

d. Use of Therabands in a rowing motion while exercising on the Orbiter cycle ergometer is permitted. Use of Therabands to perform the EVA prebreathe protocol is permitted. Other exercises using Therabands are prohibited.

e. Use of exercise bands while exercising on an unisolated Cycle Ergonometer with Vibration Isolation and Stabilization (CEVIS) is prohibited, except for the purposes of EVA pre-breathe.

f. Use of the Flywheel Exercise Device (FWED) is prohibited.

g. All unisolated exercise is prohibited during the following events/configurations:

   1. ALT PRCS attitude holds and maneuvers

   2. PRCS reboost

   3. EVA outboard of the port or starboard SARJ

   4. EVA with a crewmember in an APFR on ISS structure

   5. EVA on ESP-2, ESP-3, AMS, JEM EF, ELC-1, ELC-2, ELC-3, or ELC-4

h. Orbiter cycle ergometer exercise is prohibited during SRMS or SSRMS translation of the ELC-3 or AMS during RS MCS or USTO attitude control.

i. Orbiter cycle ergometer use is limited to a maximum pedal frequency of 65 revolution per minute (rpm) during SRMS or SSRMS translation of the ELC-3 or AMS with VRCS control.

S.4.2.3.9.2.2 General EVA Constraints

The following constraints apply to all mated configurations unless otherwise noted. Refer to Table S.4.2.3.9-1 for details regarding EVA constraints driven by SARJ locking requirements during specific EVA events.

a. Shuttle-based EVA performed on the Shuttle is prohibited forward of the forward PLB bulkhead, aft of the aft PLB bulkhead, or outside the longerons.

b. Consecutive EVA Portable Foot Restraint (PFR) lay back maneuvers can only be performed after ISS responses caused by the previous lay back response have been damped out over a 2 ½ minute wait period. In the event of a worst case lay back, the crewmember shall return to a neutral position in a nominal fashion.

c. If vigorous EVA body motions, quick grabs, or kick-offs occur, crewmembers will wait 2 ½ minutes for the response to dissipate.

d. The number of shaking cycles shall be limited to 4 for any input period or force load. After 4 cycles, the structure shall be allowed to damp out over a 2 ½ minute wait period.

e. EVA is prohibited during ALT PRCS attitude control or PRCS reboost.

f. EVA is prohibited during ATV thruster control of the ISS.

g. Quick grab and vigorous body motions are prohibited during EVA on ESP-2, ESP-3, AMS, JEM EF, ELC-1, ELC-2, ELC-3, or ELC-4.

h. Kick-offs are prohibited by a crewmember on ESP-2, ESP-3, AMS, JEM EF, ELC-1, ELC-2, ELC-3, or ELC-4.

i. Fast translation on ESP-2, ESP-3, AMS, JEM EF, ELC-1, ELC-2, ELC-3 or ELC-4 beyond the nominal translation speed of (0.45 – 0.60 fps) is prohibited.

j. Special Purpose Dexterous Manipulator (SPDM) Expanding Diameter Fastener (EDF) prybar use on the ELC-3 is allowed, but limited to five cycles. The cyclic loading is understood to be 2 to 10 seconds per cycle (half-sine). In the event five cycles have not completed the task, then a 60 second delay is required before further cycling of the prybar.

k. APFR use on ELC-3 for Worksite Interface Fixture (WIF) locations 3 and 4 is allowed, but the Extravehicular (EV) crewmember in the APFR must hold onto ELC-3 structure whenever the second EV crewmember is translating on the ELC-3 structure.

l. APFR use on ESP-3 at WIF location No. 6 is prohibited.

m. EVA translation on ESP-3 above the upper trunnions is prohibited.

S.4.2.3.9.2.3 96 Bolt Separation EVA Constraints

In addition to the EVA constraints specified above, the following constraints are applicable in the event that a 96 bolt vehicle separation is required.

a. EVA is prohibited aft of station Xo = 911 inches (23.14 m). EVA is also prohibited on the ISS.

b. Prior to removal of any of the 96 bolts, the vehicle will be placed in an ISS +X VV TEA attitude.

c. Orbiter and ISS exercise, Orbiter PRCS and VRCS control, and ISS ACS control (except momentum management controller) are prohibited after any of the 96 bolts have been removed.

d. Orbiter cycle ergometer use is prohibited after any of the 96 bolts have been removed.

e. EVA must be nonvigorous after any of the bolts have been removed.

f. During the removal of the final 4 bolts all control systems must be deactivated, internal crew must be quiescent, Shuttle venting is prohibited, and no significant dynamic loading due to EVA is allowed.

g. Orbiter APFR use is prohibited after 92 bolts have been removed.

S.4.2.3.9.2.4 Only Six Hooks Latched at the PMA/APAS Interface Constraints
In the event that only 6 hooks are latched at the PMA/APAS interface, the following operational constraints are required in addition to the general constraints specified in Sections S.4.2.3.9.2.1 and S.4.2.3.9.2.2. The constraints apply to all mated configurations unless otherwise noted.

a. SSRMS translation of the ELC-3 or AMS is prohibited.

b. SRMS translation of ELC-3 or AMS is prohibited.

c. Orbiter ALT PRCS control and VRCS control are prohibited.

d. Orbiter PRCS reboost is prohibited.

e. RS MCS commanded attitude control is prohibited, including snap and hold recovery from free drift.

f. USTO commanded attitude control using any Progress jets or ATV jets is prohibited.

g. All ISS and Orbiter crew exercise are prohibited.

h. EVA is prohibited.

S.4.2.3.9.3 Reserved

S.4.2.3.9.4 Reserved

S.4.2.3.9.5 Reserved

S.4.2.3.9.6 IEA Constraints

S.4.2.3.9.7 SARJ Constraints
The following constraints apply to all mated configurations unless otherwise noted. Refer to Table S.4.2.3.9-1 for details regarding SARJ locking requirements during specific EVA events.

a. The port and starboard SARJ must be locked during Orbiter docking and undocking.

b. The port and starboard SARJ must be locked during all PRCS jet activity.

c. The port and starboard SARJ must be feathered during USTO attitude control, RS MCS attitude control, and CMG desaturations.

    1. The port and starboard SARJ are locked during RS MCS attitude maneuvers and USTO attitude maneuvers.

d. The port and starboard SARJ must be feathered during VRCS control.

e. Both SARJs must be locked for unisolated exercise during RS MCS attitude control and USTO attitude control.

f. Both SARJs must be locked for EVA operations for RS MCS and USTO attitude control.

g. The starboard SARJ must be locked during any EVA operations on the ESP-3.

h. The port SARJ must be locked during any EVA oparations on the ELC-1 on P3 nadir CAS.

i. The starboard SARJ must be locked during any EVA operations on the ELC-2 on the S3 zenith outboard PAS.

j. The port SARJ must be locked during any EVA operations on the ELC-3 on the P3 Zenith CAS.

k. The starboard SARJ must be locked during any EVA operations on the AMS on the S3 Zenith inboard PAS.

l. The starboard SARJ must be locked during any EVA operations on the ELC-4 on the S3 nadir inboard PAS.

m. The port SARJ must be locked during any EVA operations outboard of the port SARJ.

n. The starboard SARJ must be locked during any EVA operations outboard of the starboard SARJ.

S.4.2.3.9.8 TRRJ Constraints

a. EVA on the radiator beam must be limited to within 130 inches from the TRRJ unless tether restraints are deployed. The Drive/Locking Assembly (DLA) shall be disengaged if EVA is conducted beyond this range.

b. TRRJs should be locked during Orbiter docking.

c. The port and starboard TRRJ should be positioned at angles ranging from -15 degrees to +15 degrees during RS MCS and USTO attitude maneuvers.

S.4.2.4 Shuttle Undocking Loads

Documented in Appendix S of NSTS-21000-IDD-ISS.

S.4.2.4.1 ISS and Shuttle Math Model Data

ISS and Shuttle structural math models are documented in Section S.4.3. ISS and Shuttle mass properties data are documented in JSC 26557. The ISS solar array orientations for analysis are documented in Table S.4.2.1.1-2. Structural damping shall not be greater than 1.0 percent of critical damping for all modes up to 10 Hz.

S.4.2.4.2 Uncertainty Factor

Documented in Appendix S of NSTS-21000-IDD-ISS.

S.4.2.4.3 Shuttle Undocking Loading Criteria
Documented in Appendix S of NSTS-21000-IDD-ISS.

S.4.2.4.3.1 Undocking with Spring Loaded Pushers
Documented in Appendix S of NSTS-21000-IDD-ISS.

S.4.2.4.3.2 Contingency Undocking with Pyrotechnics
Documented in Appendix S of NSTS-21000-IDD-ISS.

S.4.2.4.3.3 Contingency Undocking with 96 Bolt EVA
Documented in Appendix S of NSTS-21000-IDD-ISS.

S.4.2.4.4 Loading Combinations
Documented in Appendix S of NSTS-21000-IDD-ISS.

S.4.2.4.5 Limit Load Constraints
Limit load constraints for the ISS internal interfaces and ISS/Shuttle interface due to Shuttle undocking and Shuttle RCS plume impingement are given in Tables S.4.1.1-1, S.4.1.1-3, and S.4.1.1-4.

Table S.4.2.1.1-1 ISS Array and Radiator Angles for Shuttle Approach [1]

Articulating Component		SARJ Feathered		SARJ Worst-Case
		US PV Arrays Feathered	US PV Arrays Worst-Case	US PV Arrays Feathered
		Angle	Angle	Angle
Port SARJ		285°	90°	180°
Starboard SARJ		72°	90°	180°
Beta	US PV Array 1A	70°	180°	270°
	US PV Array 3A	80°	180°	90°
	US PV Array 1B	270°	180°	90°
	US PV Array 3B	270°	180°	270°
	US PV Array 2A	100°	180°	270°
	US PV Array 4A	270°	180°	90°
	US PV Array 2B	100°	180°	90°
	US PV Array 4B	270°	180°	270°
SM Port PV Array		180° [2]	270° [3]	292.5° [4]
SM Stbd PV Array		180° [2]	270° [3]	292.5° [4]
ATV Port PV Arrays		0°	22.5°	90°
ATV Stbd PV Arrays		0°	-22.5°	90°
Port HRS Radiator		75°	45°	-60°
Stbd HRS Radiator		90°	30°	-30°

Notes:
1) ISS Array joint angle convention is documented in Appendix S of NSTS-21000-IDD-ISS, S.4.3.2.1.
2) Sun Zone 9.
3) Sun Zone 13.
4) Sun Zone 14.

Table S.4.2.1.1-2 ISS Array and Radiator Angles for Shuttle Separation

Articulating Component		SARJ Feathered		SARJ Worst-Case
		US PV Arrays Feathered	US PV Arrays Worst-Case	US PV Arrays Feathered
		Angle	Angle	Angle
Port SARJ		255°	90°	180°
Starboard SARJ		90°	270°	180°
Beta	US PV Array 1A	270°	180°	270°
	US PV Array 3A	90°	180°	90°
	US PV Array 1B	100°	180°	90°
	US PV Array 3B	270°	180°	270°
	US PV Array 2A	270°	180°	270°
	US PV Array 4A	90°	180°	90°
	US PV Array 2B	80°	180°	90°
	US PV Array 4B	270°	180°	270°
SM Port PV Array		180° (2)	270° (3)	292.5° (4)
SM Stbd PV Array		180° (2)	270° (3)	292.5° (4)
ATV Port PV Arrays		0°	22.5°	90°
ATV Stbd PV Arrays		0°	-22.5°	90°
Port HRS Radiator		90°	60°	90°
Stbd HRS Radiator		90°	60°	90°

Notes:
1) ISS Array joint angle convention is documented in Appendix S of NSTS-21000-IDD-ISS, S.4.3.2.1.
2) Sun Zone 9.
3) Sun Zone 13.
4) Sun Zone 14.

Table S.4.2.3.1-1 ISS PV Array Angles for Shuttle/ISS Mated Operations Dynamic Analysis

	Configuration				
	Initial	Intermediate (ELC3 on ISS)	Final (AMS on ISS)		
			Non-EVA	EVA 1 and EVA 2	EVA 3
Articulating Components	Angle	Angle	Angle	Angle	Angle
Port SARJ	0°	0°	0°	51°	285°
Starboard SARJ	60°	60°	60°	60°	60°
US PV Array 1B	90°	90°	90°	90°	90°
US PV Array 3B	270°	270°	270°	270°	270°
US PV Array 3A	90°	90°	90°	90°	90°
US PV Array 1A	270°	270°	270°	270°	270°
US PV Array 2A	270°	270°	270°	270°	270°
US PV Array 4A	90°	90°	90°	90°	90°
US PV Array 4B	90°	90°	90°	90°	90°
US PV Array 2B	270°	270°	270°	270°	270°
SM Port PV Array	292.5° (2)	135° (3)	180° (4)	180° (4)	180° (4)
SM Stbd PV Array	292.5° (2)	135° (3)	180° (4)	180° (4)	180° (4)
ATV Port PV Arrays	22.5°	22.5°	22.5°	22.5°	22.5°
ATV Stbd PV Arrays	-22.5°	-22.5°	-22.5°	-22.5°	-22.5°
Port HRS Radiators	90°	60°	45°	45°	45°
Stbd HRS Radiators	90°	60°	45°	45°	45°

Notes:
1) ISS Array joint angle convention is documented in Appendix S of NSTS-21000-IDD-ISS, S.4.3.2.1.
2) Sun Zone 14.
3) Sun Zone 7.
4) Sun Zone 9.

Table S.4.2.3.2.1.1-1 Jet Selection for ALT PRCS Control – Initial Configuration (Prior to AMS Installation) 1-Jet ALT PRCS, Low Z with +/- X Jets, Fwd Y Jets Deselected

CMD			Jets	α_x	α_y	α_z	Angle	Projection	Pulses		
R	P	Y		deg/sec^2	deg/sec^2	deg/sec^2	deg	deg/sec^2	uni	bi	hold
-1	-1	-1	L2D - -	-0.002816	-0.016964	-0.010250	30.00	0.017338	157	157	35
-1	-1	0	F3F - -	0.000013	-0.028225	0.001339	45.09	0.019949	94	94	21
-1	-1	1	R2D - -	0.002027	-0.017245	0.010391	43.06	0.014785	154	154	35
-1	0	-1	L1L - -	-0.011483	-0.000038	-0.031804	25.15	0.030609	84	84	19
-1	0	0	F1D - -	-0.012590	0.007815	0.010333	45.82	0.012590	211	15	47
-1	0	1	F1D - -	-0.012590	0.007815	0.010333	26.20	0.016209	211	211	47
-1	1	-1	L1L - -	-0.011483	-0.000038	-0.031804	42.40	0.024970	84	84	19
-1	1	0	F1D - -	-0.012590	0.007815	0.010333	36.99	0.014429	211	211	47
-1	1	1	F1D - -	-0.012590	0.007815	0.010333	10.78	0.017746	211	211	47
0	-1	-1	L2D - -	-0.002816	-0.016964	-0.010250	16.01	0.019243	157	157	35
0	-1	0	F3F - -	0.000013	-0.028225	0.001339	2.72	0.028225	94	15	21
0	-1	1	R2D - -	0.002027	-0.017245	0.010391	15.05	0.019541	154	154	35
0	0	-1	L1L - -	-0.011483	-0.000038	-0.031804	19.85	0.031804	84	15	19
0	0	1	R1R - -	0.011521	-0.000905	0.031317	20.25	0.031317	85	15	19
0	1	-1	R1A - -	0.001345	0.028355	-0.006654	31.89	0.024755	94	94	21
0	1	0	L1A - -	-0.000939	0.028224	0.003942	8.17	0.028224	94	15	21
0	1	1	L1A - -	-0.000939	0.028224	0.003942	37.09	0.022745	94	94	21
1	-1	-1	L2D - -	-0.002816	-0.016964	-0.010250	45.28	0.014086	157	157	35
1	-1	0	F3F - -	0.000013	-0.028225	0.001339	45.04	0.019967	94	94	21
1	-1	1	R2D - -	0.002027	-0.017245	0.010391	32.19	0.017125	154	154	35
1	0	-1	F2D - -	0.011655	0.008015	-0.010325	27.44	0.015542	228	228	51
1	0	0	F2D - -	0.011655	0.008015	-0.010325	48.28	0.011655	228	15	51
1	0	1	R1R - -	0.011521	-0.000905	0.031317	24.85	0.030291	85	85	19
1	1	-1	F2D - -	0.011655	0.008015	-0.010325	8.55	0.017318	228	228	51
1	1	0	F2D - -	0.011655	0.008015	-0.010325	37.42	0.013909	228	228	51
1	1	1	R1R - -	0.011521	-0.000905	0.031317	43.51	0.024209	85	85	19
			Averages		MCA						
			RSS:	0.02445	Roll	0.01883					
			Angle:	29.58	Pitch	0.02829					
			Proj:	0.0207	Yaw	0.03156					

Table S.4.2.3.2.1.1-2 Jet Selection for ALT PRCS Control for Reboost – Initial Configuration (Prior to AMS Installation) 1-Jet ALT PRCS, Low Z without X Jets, Fwd Y Jets Deselected

CMD			Jets	α_x	α_y	α_z	Angle	Projection	Pulses		
R	P	Y		deg/sec^2	deg/sec^2	deg/sec^2	deg	deg/sec^2	uni	bi	hold
-1	-1	-1	L2D - -	-0.002816	-0.016964	-0.010250	30.00	0.017338	157	157	35
-1	-1	0	L2D - -	-0.002816	-0.016964	-0.010250	45.68	0.013987	157	157	35
-1	-1	1	R2D - -	0.002027	-0.017245	0.010391	43.06	0.014785	154	154	35
-1	0	-1	L1L - -	-0.011483	-0.000038	-0.031804	25.15	0.030609	84	84	19
-1	0	0	F1D - -	-0.012590	0.007815	0.010333	45.82	0.012590	211	15	47
-1	0	1	F1D - -	-0.012590	0.007815	0.010333	26.20	0.016209	211	211	47
-1	1	-1	L1L - -	-0.011483	-0.000038	-0.031804	42.40	0.024970	84	84	19
-1	1	0	F1D - -	-0.012590	0.007815	0.010333	36.99	0.014429	211	211	47
-1	1	1	F1D - -	-0.012590	0.007815	0.010333	10.78	0.017746	211	211	47
0	-1	-1	L2D - -	-0.002816	-0.016964	-0.010250	16.01	0.019243	157	157	35
0	-1	0	R2D - -	0.002027	-0.017245	0.010391	31.55	0.017245	154	15	35
0	-1	1	R2D - -	0.002027	-0.017245	0.010391	15.05	0.019541	154	154	35
0	0	-1	L1L - -	-0.011483	-0.000038	-0.031804	19.85	0.031804	84	15	19
0	0	1	R1R - -	0.011521	-0.000905	0.031317	20.25	0.031317	85	15	19
0	1	-1	F2D - -	0.011655	0.008015	-0.010325	42.22	0.012969	228	228	51
0	1	0	F2D - -	0.011655	0.008015	-0.010325	62.76	0.008015	228	15	51
0	1	1	F1D - -	-0.012590	0.007815	0.010333	44.74	0.012832	211	211	47
1	-1	-1	L2D - -	-0.002816	-0.016964	-0.010250	45.28	0.014086	157	157	35
1	-1	0	R2D - -	0.002027	-0.017245	0.010391	47.67	0.013627	154	154	35
1	-1	1	R2D - -	0.002027	-0.017245	0.010391	32.19	0.017125	154	154	35
1	0	-1	F2D - -	0.011655	0.008015	-0.010325	27.44	0.015542	228	228	51
1	0	0	F2D - -	0.011655	0.008015	-0.010325	48.28	0.011655	228	15	51
1	0	1	R1R - -	0.011521	-0.000905	0.031317	24.85	0.030291	85	85	19
1	1	-1	F2D - -	0.011655	0.008015	-0.010325	8.55	0.017318	228	228	51
1	1	0	F2D - -	0.011655	0.008015	-0.010325	37.42	0.013909	228	228	51
1	1	1	R1R - -	0.011521	-0.000905	0.031317	43.51	0.024209	85	85	19
			Averages		MCA						
			RSS:	0.02224	Roll	0.01883					
			Angle:	33.6	Pitch	0.01263					
			Proj:	0.0182	Yaw	0.03156					

Table S.4.2.3.2.1.1-3 Jet Selection for VRCS Control – Initial Configuration (Prior to AMS Installation)

CMD R	CMD P	CMD Y	Jets			α_x deg/sec^2	α_y deg/sec^2	α_z deg/sec^2	Angle deg	Projection deg/sec^2	Pulses uni	Pulses bi	Pulses hold
-1	-1	-1	L5L	R5D	L5D	-0.000331	-0.000805	-0.000884	19.96	0.001166	0	4	0
-1	-1	0	F5L	R5D	L5D	-0.000376	-0.000568	0.000308	26.74	0.000667	0	4	0
-1	-1	1	F5L	R5D	L5D	-0.000376	-0.000568	0.000308	14.78	0.000723	0	4	0
-1	0	-1	F5L	L5L	L5D	-0.000700	-0.000180	-0.000748	10.13	0.001023	0	4	0
-1	0	0	F5L	L5D	-	-0.000387	-0.000169	0.000141	29.65	0.000387	0	4	0
-1	0	1	F5L	R5D	-	-0.000348	-0.000173	0.000469	18.47	0.000578	0	4	0
-1	1	-1	F5L	L5L	-	-0.000671	0.000215	-0.000586	21.96	0.000850	0	4	0
-1	1	0	F5L	-	-	-0.000358	0.000226	0.000303	37.49	0.000414	0	4	0
-1	1	1	F5L	-	-	-0.000358	0.000226	0.000303	10.36	0.000513	0	4	0
0	-1	1-	L5L	R5D	L5D	-0.000331	-0.000805	-0.000884	15.68	0.001195	0	4	0
0	-1	0	R5D	L5D	-	-0.000018	-0.000794	0.000005	1.31	0.000794	0	4	0
0	-1	1	R5R	R5D	L5D	0.000295	-0.000830	0.000894	13.73	0.001219	0	4	0
0	0	-1	F5R	L5L	L5D	-0.000009	-0.000174	-0.001354	7.32	0.001354	0	4	0
0	0	1	F5L	R5R	R5D	-0.000036	-0.000209	0.001359	8.85	0.001359	0	4	0
0	1	-1	F5R	F5L	L5L	-0.000339	0.000448	-0.000889	25.98	0.000945	0	4	0
0	1	0	F5R	F5L	-	-0.000026	0.000459	0.000000	3.22	0.000459	0	4	0
0	1	1	F5R	F5L	R5R	0.000286	0.000423	0.000890	25.21	0.000928	0	4	0
1	-1	-1	F5R	R5D	L5D	0.000315	-0.000562	-0.000298	17.10	0.000679	0	4	0
1	-1	0	F5R	R5D	-	0.000343	-0.000167	-0.000137	27.14	0.000361	0	4	0
1	-1	1	R5R	L5D	-	0.000284	-0.000431	0.000728	21.01	0.000833	0	4	0
1	0	-1	F5R	L5D	-	0.000304	-0.000163	-0.000465	20.02	0.000544	0	4	0
1	0	0	F5R	R5D	-	0.000343	-0.000167	-0.000137	32.16	0.000343	0	4	0
1	0	1	F5R	R5R	R5D	0.000655	-0.000203	0.000753	12.14	0.000996	0	4	0
1	1	-1	F5R	-	-	0.000333	0.000232	-0.000303	8.27	0.000501	0	4	0
1	1	0	F5R	-	-	0.000333	0.000232	-0.000303	37.91	0.000399	0	4	0
1	1	1	F5R	R5R	-	0.000645	0.000197	0.000587	22.69	0.000824	0	4	0
					Averages		MCA						
					RSS:	0.00082	Roll	0.00066					
					Angle:	18.82	Pitch	0.00063					
					Proj:	0.0008	Yaw	0.00089					
----- Near-integer selections (not included in averages above) -----													
-1	0	0	F5L	L5L	R5D	-0.000661	-0.000184	-0.000420	33.17	0.000673	0	4	0
1	0	0	F5R	R5R	L5D	0.000617	-0.000198	0.000425	36.05	0.000626	0	4	0
0	0	-1	F5R	L5L	-	0.000020	0.000221	-0.001192	9.05	0.001197	0	4	0
0	0	1	F5L	R5R	-	-0.000046	0.000191	0.001193	8.52	0.001196	0	4	0

Table S.4.2.3.2.1.1-4 Jet Selection for ALT PRCS Control – Final Configuration (After AMS Installation) 1-Jet ALT PRCS, Low Z with +/- X Jets, Fwd Y Jets Deselected

CMD			Jets	α_x	α_y	α_z	Angle	Projection	Pulses		
R	P	Y		deg/sec^2	deg/sec^2	deg/sec^2	deg	deg/sec^2	uni	bi	hold
-1	-1	-1	L2D - -	-0.002977	-0.017577	-0.010234	30.15	0.017775	151	151	34
-1	-1	0	F3F - -	-0.000098	-0.029202	0.001258	44.86	0.020718	91	91	21
-1	-1	1	R2D - -	0.002197	-0.017900	0.010568	43.48	0.015167	148	148	33
-1	0	-1	L1L - -	-0.011974	-0.000014	-0.032062	24.52	0.031139	83	83	19
-1	0	0	F1D - -	-0.012522	0.007520	0.009712	44.45	0.012522	212	15	47
-1	0	1	F1D - -	-0.012522	0.007520	0.009712	26.32	0.015722	212	212	47
-1	1	-1	L1L - -	-0.011974	-0.000014	-0.032062	42.04	0.025417	83	83	19
-1	1	0	F1D - -	-0.012522	0.007520	0.009712	36.11	0.014172	212	212	47
-1	1	1	F1D - -	-0.012522	0.007520	0.009712	11.66	0.017179	212	212	47
0	-1	-1	L2D - -	-0.002977	-0.017577	-0.010234	16.93	0.019665	151	151	34
0	-1	0	F3F - -	-0.000098	-0.029202	0.001258	2.47	0.029202	91	15	21
0	-1	1	R2D - -	0.002197	-0.017900	0.010568	15.63	0.020129	148	148	33
0	0	-1	L1L - -	-0.011974	-0.000014	-0.032062	20.48	0.032062	83	15	19
0	0	1	R1R - -	0.012007	-0.000962	0.031585	20.87	0.031585	84	15	19
0	1	-1	R1A - -	0.001367	0.029521	-0.006502	32.67	0.025472	90	90	20
0	1	0	L1A - -	-0.000822	0.029344	0.003956	7.84	0.029344	91	15	21
0	1	1	L1A - -	-0.000822	0.029344	0.003956	37.35	0.023547	91	91	21
1	-1	-1	L2D - -	-0.002977	-0.017577	-0.010234	45.77	0.014338	151	151	34
1	-1	0	F3F - -	-0.000098	-0.029202	0.001258	45.25	0.020580	91	91	21
1	-1	1	R2D - -	0.002197	-0.017900	0.010568	32.11	0.017704	148	148	33
1	0	-1	F2D - -	0.011830	0.007917	-0.009805	27.74	0.015299	224	224	50
1	0	0	F2D - -	0.011830	0.007917	-0.009805	46.81	0.011830	224	15	50
1	0	1	R1R - -	0.012007	-0.000962	0.031585	24.24	0.030824	84	84	19
1	1	-1	F2D - -	0.011830	0.007917	-0.009805	9.21	0.017062	224	224	50
1	1	0	F2D - -	0.011830	0.007917	-0.009805	36.12	0.013963	224	224	50
1	1	1	R1R - -	0.012007	-0.000962	0.031585	43.27	0.024612	84	84	19
			Averages		MCA						
			RSS:	0.02481	Roll	0.01891					
			Angle:	29.55	Pitch	0.02936					
			Proj:	0.021	Yaw	0.03182					

Table S.4.2.3.2.1.1-5 Jet Selection for ALT PRCS Control for Reboost – Final Configuration (After AMS Installation) 1-Jet ALT PRCS, Low Z without X Jets, Fwd Y Jets Deselected

CMD			Jets	α_x	α_y	α_z	Angle	Projection	Pulses		
R	P	Y		deg/sec^2	deg/sec^2	deg/sec^2	deg	deg/sec^2	uni	bi	hold
-1	-1	-1	L2D - -	-0.002977	-0.017577	-0.010234	30.15	0.017775	151	151	34
-1	-1	0	L2D - -	-0.002977	-0.017577	-0.010234	45.01	0.014534	151	151	34
-1	-1	1	R2D - -	0.002197	-0.017900	0.010568	43.48	0.015167	148	148	33
-1	0	-1	L1L - -	-0.011974	-0.000014	-0.032062	24.52	0.031139	83	83	19
-1	0	0	F1D - -	-0.012522	0.007520	0.009712	44.45	0.012522	212	15	47
-1	0	1	F1D - -	-0.012522	0.007520	0.009712	26.32	0.015722	212	212	47
-1	1	-1	L1L - -	-0.011974	-0.000014	-0.032062	42.04	0.025417	83	83	19
-1	1	0	F1D - -	-0.012522	0.007520	0.009712	36.11	0.014172	212	212	47
-1	1	1	F1D - -	-0.012522	0.007520	0.009712	11.66	0.017179	212	212	47
0	-1	-1	L2D - -	-0.002977	-0.017577	-0.010234	16.93	0.019665	151	151	34
0	-1	0	R2D - -	0.002197	-0.017900	0.010568	31.09	0.017900	148	15	33
0	-1	1	R2D - -	0.002197	-0.017900	0.010568	15.63	0.020129	148	148	33
0	0	-1	L1L - -	-0.011974	-0.000014	-0.032062	20.48	0.032062	83	15	19
0	0	1	R1R - -	0.012007	-0.000962	0.031585	20.87	0.031585	84	15	19
0	1	-1	F2D - -	0.011830	0.007917	-0.009805	43.53	0.012531	224	224	50
0	1	0	F2D - -	0.011830	0.007917	-0.009805	62.74	0.007917	224	15	50
0	1	1	F1D - -	-0.012522	0.007520	0.009712	46.00	0.012185	212	212	47
1	-1	-1	L2D - -	-0.002977	-0.017577	-0.010234	45.77	0.014338	151	151	34
1	-1	0	R2D - -	0.002197	-0.017900	0.010568	47.17	0.014211	148	148	33
1	-1	1	R2D - -	0.002197	-0.017900	0.010568	32.11	0.017704	148	148	33
1	0	-1	F2D - -	0.011830	0.007917	-0.009805	27.74	0.015299	224	224	50
1	0	0	F2D - -	0.011830	0.007917	-0.009805	46.81	0.011830	224	15	50
1	0	1	R1R - -	0.012007	-0.000962	0.031585	24.24	0.030824	84	84	19
1	1	-1	F2D - -	0.011830	0.007917	-0.009805	9.21	0.017062	224	224	50
1	1	0	F2D - -	0.011830	0.007917	-0.009805	36.12	0.013963	224	224	50
1	1	1	R1R - -	0.012007	-0.000962	0.031585	43.27	0.024612	84	84	19
			Averages		MCA						
			RSS:	0.02239	Roll	0.01891					
			Angle:	33.59	Pitch	0.01291					
			Proj:	0.0184	Yaw	0.03182					

Table S.4.2.3.2.1.1-6 Jet Selection for VRCS Control – Final Configuration (After AMS Installation)

CMD R	CMD P	CMD Y	Jets			α_x deg/sec^2	α_y deg/sec^2	α_z deg/sec^2	Angle deg	Projection deg/sec^2	Pulses uni	Pulses bi	Pulses hold
-1	-1	-1	L5L	R5D	L5D	-0.000344	-0.000834	-0.000887	19.55	0.001193	0	4	0
-1	-1	0	F5L	L5D	-	-0.000387	-0.000191	0.000125	24.57	0.000409	0	4	0
-1	-1	1	F5L	R5D	L5D	-0.000374	-0.000605	0.000294	17.26	0.000735	0	4	0
-1	0	-1	F5L	L5L	L5D	-0.000714	-0.000202	-0.000771	11.08	0.001050	0	4	0
-1	0	0	F5L	L5D	-	-0.000387	-0.000191	0.000125	30.53	0.000387	0	4	0
-1	0	1	F5L	R5D	-	-0.000343	-0.000196	0.000455	20.53	0.000564	0	4	0
-1	1	-1	F5L	L5L	-	-0.000683	0.000208	-0.000610	22.68	0.000867	0	4	0
-1	1	0	F5L	-	-	-0.000356	0.000218	0.000286	36.60	0.000406	0	4	0
-1	1	1	F5L	-	-	-0.000356	0.000218	0.000286	11.11	0.000497	0	4	0
0	-1	-1	L5L	R5D	L5D	-0.000344	-0.000834	-0.000887	15.88	0.001217	0	4	0
0	-1	0	R5D	L5D	-	-0.000018	-0.000824	0.000009	1.36	0.000824	0	4	0
0	-1	1	R5R	R5D	L5D	0.000308	-0.000861	0.000906	13.93	0.001250	0	4	0
0	0	-1	F5R	L5L	L5D	-0.000020	-0.000190	-0.001345	8.09	0.001345	0	4	0
0	0	1	F5L	R5R	-	-0.000031	0.000180	0.001182	8.80	0.001182	0	4	0
0	1	-1	F5R	F5L	L5L	-0.000346	0.000438	-0.000899	26.70	0.000945	0	4	0
0	1	0	F5R	F5L	-	-0.000019	0.000448	-0.000003	2.45	0.000448	0	4	0
0	1	1	F5R	F5L	R5R	0.000307	0.000410	0.000894	26.48	0.000922	0	4	0
1	-1	-1	F5R	R5D	L5D	0.000320	-0.000594	-0.000280	19.34	0.000689	0	4	0
1	-1	0	F5R	R5D	-	0.000350	-0.000184	-0.000119	23.85	0.000378	0	4	0
1	-1	1	R5R	L5D	-	0.000295	-0.000447	0.000736	20.37	0.000854	0	4	0
1	0	-1	F5R	L5D	-	0.000307	-0.000179	-0.000449	21.03	0.000534	0	4	0
1	0	0	F5R	R5D	-	0.000350	-0.000184	-0.000119	32.07	0.000350	0	4	0
1	0	1	F5R	R5R	-	0.000663	0.000192	0.000608	12.29	0.000899	0	4	0
1	1	-1	F5R	-	-	0.000337	0.000230	-0.000288	8.75	0.000494	0	4	0
1	1	0	F5R	-	-	0.000337	0.000230	-0.000288	36.62	0.000401	0	4	0
1	1	1	F5R	R5R	-	0.000663	0.000192	0.000608	23.32	0.000845	0	4	0
				Averages			MCA						
				RSS:		0.0008	Roll	0.00067					
				Angle:		19.05	Pitch	0.00064					
				Proj:		0.0008	Yaw	0.00090					
----- Near-integer selections (not included in averages above) -----													
0	0	-1	F5R	L5L	-	0.000011	0.000219	-0.001184	9.39	0.001188	0	4	0
0	0	1	F5L	R5R	R5D	-0.000017	-0.000234	0.001352	7.27	0.001361	0	4	0

Table S.4.2.3.2.4.1-1 ISS RS Thruster Torques and Ang. Accelerations Used for All Attitude Control Modes of Mated Stages

• DC1 Progress - roll (2 jets) – Baseline
• ATV - pitch (2 jets) and yaw (2 jets) - Baseline

Stage ULF6_AR (After Rendezvous)

Control	**Thrusters**	**Torque about COM (ft-lb)**			**Angular Accel. (deg/sec^2)**		
Channel	**SM**	**X**	**Y**	**Z**	ε_x	ε_y	ε_z
-roll (+K)	1+2+5+6	-573.7	0.0	0.0	-3.1406E-04	5.2888E-06	-3.1546E-05
+roll (-K)	3+4+7+8	573.7	0.0	0.0	3.1406E-04	-5.2888E-06	3.1546E-05
-pitch (+T)	22 + 23	-112.5	-6521.7	26.0	-4.5944E-08	-3.2283E-03	5.4039E-06
+pitch (-T)	25 + 26	112.5	6719.1	26.0	1.0847E-06	3.3261E-03	1.1623E-05
-yaw (+P)	10 + 11	427.3	98.7	-6594.4	-1.2962E-04	4.8003E-05	-2.1480E-03
+yaw (-P)	13 + 14	-427.3	98.7	6646.4	1.3066E-04	4.9725E-05	2.1651E-03
	DC1 Progress						
-roll	25 + 26	-1378.1	-18.1	-4519.5	-1.0028E-03	5.8550E-06	-1.5640E-03
+roll	23 + 24	1377.2	-18.1	4519.5	1.0027E-03	-2.3750E-05	1.5640E-03
	Progress						
-pitch	21/22 + 25/26	-163.1	-10812.6	-4.7	1.0148E-05	-5.3525E-03	-5.4940E-06
+pitch	19/20 + 23/24	163.1	10805.5	2.9	-1.0185E-05	5.3491E-03	4.8886E-06
-yaw	19/20 + 25/26	620.0	-7.3	-10810.0	-2.5494E-04	-4.3065E-06	-3.5256E-03
+yaw	21/22 + 23/24	-620.0	0.3	10808.1	2.5491E-04	8.3175E-07	3.5249E-03
-pitch/-yaw	25/26	228.5	-5408.2	-5406.9	-1.2239E-04	-2.6776E-03	-1.7654E-03
-pitch/+yaw	21/22	-391.6	-5404.4	5402.2	1.3254E-04	-2.6750E-03	1.7599E-03
+pitch/-yaw	19/20	391.6	5400.9	-5403.1	-1.3255E-04	2.6733E-03	-1.7602E-03
+pitch/+yaw	23/24	-228.5	5404.7	5406.0	1.2237E-04	2.6758E-03	1.7651E-03
	ATV						
-pitch	A2+A10	-194.9	-14075.5	0.0	2.3091E-05	-6.9680E-03	-4.1710E-06
+pitch	A12+A20	194.9	14075.5	0.0	-2.3091E-05	6.9680E-03	4.1710E-06
-yaw	A7+A15	640.8	-370.0	-12038.3	-3.0777E-04	-1.8351E-04	-3.9287E-03
+yaw	A5+A17	-640.8	-370.0	11843.4	3.0388E-04	-1.8280E-04	3.8649E-03
-roll	A2+A12	-420.9	0.0	0.0	-2.3042E-04	3.8803E-06	-2.3145E-05
+roll	A10+A20	420.9	0.0	0.0	2.3042E-04	-3.8803E-06	2.3145E-05
-pitch/-roll	A2	-307.9	-7037.8	0.0	-1.0366E-04	-3.4821E-03	-1.3658E-05
-pitch/+roll	A10	113.0	-7037.8	0.0	1.2675E-04	-3.4859E-03	9.4870E-06
+pitch/-roll	A12	-113.0	7037.8	0.0	-1.2675E-04	3.4859E-03	-9.4870E-06
+pitch/+roll	A20	307.9	7037.8	0.0	1.0366E-04	3.4821E-03	1.3658E-05

Notes:
1) Thruster Identifications (IDs) shown in this table represent those used for nominal attitude maneuvers
2) Torque and angular acceleration values reflect nominal attitude maneuver thruster firings

Table S.4.2.3.2.4.1-1 ISS RS Thruster Torques and Ang. Accelerations Used for All Attitude Control Modes of Mated Stages (continued)

• DC1 Progress - roll (2 jets) – Baseline
• ATV - pitch (2 jets) and yaw (2 jets) - Baseline

Stage ULF6_INT1

Control	**Thrusters**	**Torque about COM (ft-lb)**			**Angular Accel. (deg/sec^2)**		
Channel	**SM**	**X**	**Y**	**Z**	ε_x	ε_y	ε_z
-roll (+K)	1+2+5+6	-573.7	0.0	0.0	-3.0567E-04	3.9654E-06	-2.9654E-05
+roll (-K)	3+4+7+8	573.7	0.0	0.0	3.0567E-04	-3.9654E-06	2.9654E-05
-pitch (+T)	22 + 23	-115.9	-6489.7	26.8	-1.5537E-05	-3.2405E-03	-5.2026E-06
+pitch (-T)	25 + 26	115.9	6668.9	26.8	1.7067E-05	3.3300E-03	2.2927E-05
-yaw (+P)	10 + 11	387.9	89.6	-6552.5	-1.3266E-04	3.4032E-05	-2.1210E-03
+yaw (-P)	13 + 14	-387.9	89.6	6606.1	1.3419E-04	5.5537E-05	2.1387E-03
	DC1 Progress						
-roll	25 + 26	-1418.6	-17.9	-4477.2	-9.8720E-04	-4.6311E-06	-1.5364E-03
+roll	23 + 24	1417.7	-17.9	4477.2	9.8693E-04	-1.3252E-05	1.5363E-03
	Progress						
-pitch	21/22 + 25/26	-168.1	-10752.6	-4.7	-1.5470E-05	-5.3693E-03	-2.3423E-05
+pitch	19/20 + 23/24	168.1	10746.2	2.8	1.5416E-05	5.3661E-03	2.2792E-05
-yaw	19/20 + 25/26	562.8	-7.0	-10750.3	-2.5577E-04	-2.0554E-05	-3.4837E-03
+yaw	21/22 + 23/24	-562.8	0.6	10748.4	2.5571E-04	1.7369E-05	3.4831E-03
-pitch/-yaw	25/26	197.4	-5378.2	-5377.0	-1.3560E-04	-2.6941E-03	-1.7534E-03
-pitch/+yaw	21/22	-365.5	-5374.4	5372.3	1.2013E-04	-2.6752E-03	1.7300E-03
+pitch/-yaw	19/20	365.5	5371.2	-5373.3	-1.2016E-04	2.6736E-03	-1.7303E-03
+pitch/+yaw	23/24	-197.4	5375.0	5376.1	1.3558E-04	2.6925E-03	1.7531E-03
	ATV						
-pitch	A2+A10	-200.8	-14004.3	0.0	-1.0183E-05	-6.9932E-03	-2.7559E-05
+pitch	A12+A20	200.8	14004.3	0.0	1.0183E-05	6.9932E-03	2.7559E-05
-yaw	A7+A15	581.7	-335.8	-11979.6	-3.0698E-04	-1.8646E-04	-3.8848E-03
+yaw	A5+A17	-581.7	-335.8	11778.8	3.0125E-04	-1.4927E-04	3.8184E-03
-roll	A2+A12	-420.9	0.0	0.0	-2.2426E-04	2.9094E-06	-2.1757E-05
+roll	A10+A20	420.9	0.0	0.0	2.2426E-04	-2.9094E-06	2.1757E-05
-pitch/-roll	A2	-310.8	-7002.2	0.0	-1.1722E-04	-3.4951E-03	-2.4658E-05
-pitch/+roll	A10	110.0	-7002.2	0.0	1.0704E-04	-3.4980E-03	-2.9013E-06
+pitch/-roll	A12	-110.0	7002.2	0.0	-1.0704E-04	3.4980E-03	2.9013E-06
+pitch/+roll	A20	310.8	7002.2	0.0	1.1722E-04	3.4951E-03	2.4658E-05

Notes:
1) Thruster IDs shown in this table represent those used for nominal attitude maneuvers
2) Torque and angular acceleration values reflect nominal attitude maneuver thruster firings

Table S.4.2.3.2.4.1-1 ISS RS Thruster Torques and Ang. Accelerations Used for All Attitude Control Modes of Mated Stages (continued)

• DC1 Progress - roll (2 jets) – Baseline
• ATV - pitch (2 jets) and yaw (2 jets) - Baseline

Stage ULF6_INT2

Control	**Thrusters**	**Torque about COM (ft-lb)**			**Angular Accel. (deg/sec2)**		
Channel	**SM**	**X**	**Y**	**Z**	ε_x	ε_y	ε_z
-roll (+K)	1+2+5+6	-573.7	0.0	0.0	-3.0127E-04	5.2254E-06	-2.7152E-05
+roll (-K)	3+4+7+8	573.7	0.0	0.0	3.0127E-04	-5.2254E-06	2.7152E-05
-pitch (+T)	22 + 23	-95.4	-6456.2	22.0	9.7575E-06	-3.2849E-03	9.1911E-06
+pitch (-T)	25 + 26	95.4	6608.7	22.0	-9.0612E-06	3.3625E-03	5.0131E-06
-yaw (+P)	10 + 11	330.2	76.3	-6510.4	-1.3543E-04	4.2393E-05	-2.1056E-03
+yaw (-P)	13 + 14	-330.2	76.3	6554.5	1.3613E-04	3.5201E-05	2.1198E-03
	DC1 Progress						
-roll	25 + 26	-1477.8	-17.7	-4429.2	-9.8553E-04	8.9213E-06	-1.5130E-03
+roll	23 + 24	1477.0	-17.7	4429.2	9.8544E-04	-2.6947E-05	1.5130E-03
	Progress						
-pitch	21/22 + 25/26	-138.3	-10684.1	-4.5	2.4497E-05	-5.4363E-03	2.7802E-06
+pitch	19/20 + 23/24	138.3	10678.7	3.0	-2.4522E-05	5.4335E-03	-3.2853E-06
-yaw	19/20 + 25/26	479.1	-6.5	-10682.2	-2.5391E-04	3.1464E-06	-3.4577E-03
+yaw	21/22 + 23/24	-479.1	1.0	10680.6	2.5389E-04	-5.9053E-06	3.4572E-03
-pitch/-yaw	25/26	170.4	-5343.9	-5343.0	-1.1470E-04	-2.7159E-03	-1.7273E-03
-pitch/+yaw	21/22	-308.7	-5340.2	5338.4	1.3920E-04	-2.7204E-03	1.7301E-03
+pitch/-yaw	19/20	308.7	5337.5	-5339.2	-1.3921E-04	2.7190E-03	-1.7304E-03
+pitch/+yaw	23/24	-170.4	5341.2	5342.2	1.1469E-04	2.7145E-03	1.7271E-03
	ATV						
-pitch	A2+A10	-165.2	-13923.2	0.0	4.0076E-05	-7.0845E-03	6.2568E-06
+pitch	A12+A20	165.2	13923.2	0.0	-4.0076E-05	7.0845E-03	-6.2568E-06
-yaw	A7+A15	495.2	-285.9	-11891.5	-3.0017E-04	-1.3799E-04	-3.8507E-03
+yaw	A5+A17	-495.2	-285.9	11726.3	2.9756E-04	-1.5285E-04	3.7974E-03
-roll	A2+A12	-420.9	0.0	0.0	-2.2103E-04	3.8338E-06	-1.9921E-05
+roll	A10+A20	420.9	0.0	0.0	2.2103E-04	-3.8338E-06	1.9921E-05
-pitch/-roll	A2	-293.0	-6961.6	0.0	-9.0479E-05	-3.5404E-03	-6.8320E-06
-pitch/+roll	A10	127.9	-6961.6	0.0	1.3055E-04	-3.5442E-03	1.3089E-05
+pitch/-roll	A12	-127.9	6961.6	0.0	-1.3055E-04	3.5442E-03	-1.3089E-05
+pitch/+roll	A20	293.0	6961.6	0.0	9.0479E-05	3.5404E-03	6.8320E-06

Notes:
1) Thruster IDs shown in this table represent those used for nominal attitude maneuvers
2) Torque and angular acceleration values reflect nominal attitude maneuver thruster firings

Table S.4.2.3.2.4.1-1 ISS RS Thruster Torques and Ang. Accelerations Used for All Attitude Control Modes of Mated Stages (continued)

• DC1 Progress - roll (2 jets) – Baseline
• ATV - pitch (2 jets) and yaw (2 jets) - Baseline

Stage ULF6_INT3

Control	**Thrusters**	**Torque about COM (ft-lb)**			**Angular Accel. (deg/sec2)**		
Channel	**SM**	**X**	**Y**	**Z**	ε_x	ε_y	ε_z
-roll (+K)	1+2+5+6	-573.7	0.0	0.0	-3.0159E-04	5.0569E-06	-2.7281E-05
+roll (-K)	3+4+7+8	573.7	0.0	0.0	3.0159E-04	-5.0569E-06	2.7281E-05
-pitch (+T)	22 + 23	-89.7	-6455.4	20.7	1.0746E-05	-3.2845E-03	9.4453E-06
+pitch (-T)	25 + 26	89.7	6609.5	20.7	-1.0134E-05	3.3629E-03	3.8931E-06
-yaw (+P)	10 + 11	333.6	77.1	-6511.7	-1.3496E-04	4.3297E-05	-2.1067E-03
+yaw (-P)	13 + 14	-333.6	77.1	6553.2	1.3557E-04	3.5098E-05	2.1201E-03
	DC1 Progress						
-roll	25 + 26	-1474.2	-17.7	-4429.2	-9.8550E-04	8.7529E-06	-1.5138E-03
+roll	23 + 24	1473.5	-17.7	4429.2	9.8542E-04	-2.6779E-05	1.5138E-03
	Progress						
-pitch	21/22 + 25/26	-130.0	-10684.1	-4.5	2.5642E-05	-5.4361E-03	3.8728E-06
+pitch	19/20 + 23/24	130.0	10678.7	3.0	-2.5663E-05	5.4334E-03	-4.3470E-06
-yaw	19/20 + 25/26	484.1	-6.5	-10682.1	-2.5343E-04	3.9436E-06	-3.4589E-03
+yaw	21/22 + 23/24	-484.1	1.0	10680.7	2.5341E-04	-6.7310E-06	3.4584E-03
-pitch/-yaw	25/26	177.1	-5343.9	-5342.9	-1.1389E-04	-2.7154E-03	-1.7274E-03
-pitch/+yaw	21/22	-307.0	-5340.2	5338.5	1.3953E-04	-2.7207E-03	1.7312E-03
+pitch/-yaw	19/20	307.0	5337.5	-5339.2	-1.3954E-04	2.7193E-03	-1.7315E-03
+pitch/+yaw	23/24	-177.1	5341.2	5342.2	1.1388E-04	2.7140E-03	1.7271E-03
	ATV						
-pitch	A2+A10	-155.3	-13923.2	0.0	4.1094E-05	-7.0843E-03	7.6214E-06
+pitch	A12+A20	155.3	13923.2	0.0	-4.1094E-05	7.0843E-03	-7.6214E-06
-yaw	A7+A15	500.3	-288.9	-11886.6	-2.9969E-04	-1.3860E-04	-3.8504E-03
+yaw	A5+A17	-500.3	-288.9	11731.3	2.9740E-04	-1.5524E-04	3.8004E-03
-roll	A2+A12	-420.9	0.0	0.0	-2.2127E-04	3.7102E-06	-2.0015E-05
+roll	A10+A20	420.9	0.0	0.0	2.2127E-04	-3.7102E-06	2.0015E-05
-pitch/-roll	A2	-288.1	-6961.6	0.0	-9.0088E-05	-3.5403E-03	-6.1970E-06
-pitch/+roll	A10	132.8	-6961.6	0.0	1.3118E-04	-3.5440E-03	1.3818E-05
+pitch/-roll	A12	-132.8	6961.6	0.0	-1.3118E-04	3.5440E-03	-1.3818E-05
+pitch/+roll	A20	288.1	6961.6	0.0	9.0088E-05	3.5403E-03	6.1970E-06

Notes:
1) Thruster IDs shown in this table represent those used for nominal attitude maneuvers
2) Torque and angular acceleration values reflect nominal attitude maneuver thruster firings

Table S.4.2.3.2.4.1-1 ISS RS Thruster Torques and Ang. Accelerations Used for All Attitude Control Modes of Mated Stages (concluded)

• DC1 Progress - roll (2 jets) – Baseline
• ATV - pitch (2 jets) and yaw (2 jets) - Baseline

Stage ULF6_BS (Before Separation)

Control	**Thrusters**	**Torque about COM (ft-lb)**			**Angular Accel. (deg/sec2)**		
Channel	**SM**	**X**	**Y**	**Z**	ε_x	ε_y	ε_z
-roll (+K)	1+2+5+6	-573.7	0.0	0.0	-3.0148E-04	5.2013E-06	-2.6933E-05
+roll (-K)	3+4+7+8	573.7	0.0	0.0	3.0148E-04	-5.2013E-06	2.6933E-05
-pitch (+T)	22 + 23	-93.7	-6452.2	21.6	1.0288E-05	-3.2901E-03	9.6653E-06
+pitch (-T)	25 + 26	93.7	6601.3	21.6	-9.6082E-06	3.3661E-03	4.2922E-06
-yaw (+P)	10 + 11	322.8	74.6	-6505.1	-1.3646E-04	4.2164E-05	-2.1072E-03
+yaw (-P)	13 + 14	-322.8	74.6	6548.4	1.3714E-04	3.3848E-05	2.1212E-03
	DC1 Progress						
-roll	25 + 26	-1485.4	-17.7	-4423.3	-9.8812E-04	9.2443E-06	-1.5128E-03
+roll	23 + 24	1484.6	-17.7	4423.3	9.8803E-04	-2.7286E-05	1.5128E-03
	Progress						
-pitch	21/22 + 25/26	-135.8	-10675.8	-4.5	2.5228E-05	-5.4440E-03	3.7404E-06
+pitch	19/20 + 23/24	135.8	10670.5	3.0	-2.5252E-05	5.4413E-03	-4.2367E-06
-yaw	19/20 + 25/26	468.3	-6.4	-10673.9	-2.5493E-04	4.0768E-06	-3.4603E-03
+yaw	21/22 + 23/24	-468.3	1.1	10672.3	2.5490E-04	-6.7794E-06	3.4598E-03
-pitch/-yaw	25/26	166.3	-5339.8	-5338.8	-1.1484E-04	-2.7193E-03	-1.7282E-03
-pitch/+yaw	21/22	-302.1	-5336.0	5334.3	1.4007E-04	-2.7247E-03	1.7319E-03
+pitch/-yaw	19/20	302.1	5333.4	-5335.1	-1.4008E-04	2.7233E-03	-1.7322E-03
+pitch/+yaw	23/24	-166.3	5337.1	5338.0	1.1483E-04	2.7179E-03	1.7279E-03
	ATV						
-pitch	A2+A10	-162.2	-13913.3	0.0	4.0899E-05	-7.0951E-03	7.4862E-06
+pitch	A12+A20	162.2	13913.3	0.0	-4.0899E-05	7.0951E-03	-7.4862E-06
-yaw	A7+A15	484.0	-279.5	-11881.5	-3.0090E-04	-1.3403E-04	-3.8533E-03
+yaw	A5+A17	-484.0	-279.5	11719.3	2.9835E-04	-1.5087E-04	3.8009E-03
-roll	A2+A12	-420.9	0.0	0.0	-2.2119E-04	3.8161E-06	-1.9760E-05
+roll	A10+A20	420.9	0.0	0.0	2.2119E-04	-3.8161E-06	1.9760E-05
-pitch/-roll	A2	-291.6	-6956.7	0.0	-9.0146E-05	-3.5456E-03	-6.1369E-06
-pitch/+roll	A10	129.3	-6956.7	0.0	1.3105E-04	-3.5494E-03	1.3623E-05
+pitch/-roll	A12	-129.3	6956.7	0.0	-1.3105E-04	3.5494E-03	-1.3623E-05
+pitch/+roll	A20	291.6	6956.7	0.0	9.0146E-05	3.5456E-03	6.1369E-06

Notes:
1) Thruster IDs shown in this table represent those used for nominal attitude maneuvers
2) Thruster IDs in bold type represent those used for nominal CMG desaturations
3) Torque and angular acceleration values reflect nominal attitude maneuver thruster firing

Table S.4.2.3.2.4.4-1 Momentum Manager Desaturation Commands for SM Thrusters

Desat Direction (r,p,y)	Thruster On-Times (seconds)^					
	SM 1, 2, 5, 6	SM 3, 4, 7, 8	SM 21	SM 24	SM 9	SM 12
-1,-1,-1	2.6	0.0	0.5	0.0	0.4	0.0
-1,-1, 0	3.0	0.0	0.5	0.0	0.0	0.0
-1,-1,+1	2.4	0.0	0.5	0.0	0.0	0.5
-1, 0,-1	3.2	0.0	0.0	0.0	0.6	0.0
-1, 0, 0	4.4	0.0	0.0	0.0	0.0	0.0
-1, 0,+1	2.9	0.0	0.0	0.0	0.0	0.6
-1,+1,-1	2.7	0.0	0.0	0.4	0.5	0.0
-1,+1, 0	3.1	0.0	0.0	0.5	0.0	0.0
-1,+1,+1	2.4	0.0	0.0	0.4	0.0	0.5
-1,-1,-1	0.2	0.0	0.6	0.0	0.6	0.0
0,-1, 0	0.0	0.0	0.8	0.0	0.0	0.0
0,-1,+1	0.0	0.2	0.6	0.0	0.0	0.6
0, 0, -1	0.2	0.0	0.0	0.0	0.8	0.0
0, 0, +1	0.0	0.2	0.0	0.0	0.0	0.8
0, +1,-1	0.2	0.0	0.0	0.5	0.6	0.0
0,+1, 0	0.0	0.0	0.0	0.8	0.0	0.0
0,+1,+1	0.0	0.2	0.0	0.5	0.0	0.6
+1,-1,-1	0.0	2.4	0.5	0.0	0.5	0.0
+1,-1, 0	0.0	3.1	0.6	0.0	0.0	0.0
+1,-1,+1	0.0	2.7	0.5	0.0	0.0	0.5
+1, 0,-1	0.0	2.9	0.0	0.0	0.6	0.0
+1, 0, 0	0.0	4.4	0.0	0.0	0.0	0.0
+1, 0,+1	0.0	3.2	0.0	0.0	0.0	0.6
+1,+1,-1	0.0	2.4	0.0	0.4	0.5	0.0
+1,+1, 0	0.0	3.0	0.0	0.5	0.0	0.0
+1,+1,+1	0.0	2.6	0.0	0.4	0.0	0.5

^Thruster on-times based on 2,500 ft-lb-sec total momentum resolved into the indicated directions. Desat on-time divided into multi-pulse desat where appropiate (0,5,8,15 sec delay times)

Note: Desaturations can be repeated several times but cannot occur less than 23 seconds from the initiation of the previous desat.

Table S.4.2.3.2.4.4-2 Momentum Manager Desaturation Commands for Progress Thrusters

Desat Direction (r,p,y)	Thruster On-Times (seconds)^					
	DC Prog 11,12	DC Prog 9,10	Prog 5,6	Prog 7,8	Prog 9,10	Prog 11,12
-1,-1,-1	1.5	0.0	1.2	0.0	1.7	0.0
-1,-1, 0	1.8	0.0	1.0	0.0	2.4	0.0
-1,-1,+1	1.4	0.0	0.4	0.0	2.2	0.0
-1, 0,-1	1.9	0.0	1.9	0.0	2.6	0.0
-1, 0, 0	2.5	0.0	2.0	0.0	4.1	0.0
-1, 0,+1	1.7	0.0	1.0	0.0	3.2	0.0
-1,+1,-1	1.5	0.0	2.0	0.0	2.6	0.0
-1,+1, 0	1.8	0.0	1.9	0.0	3.4	0.0
-1,+1,+1	1.4	0.0	1.2	0.0	3.1	0.0
0, -1,-1	0.0	0.0	0.0	0.0	0.0	0.7
0,-1, 0	0.0	0.0	0.0	0.5	0.0	0.5
0,-1,+1	0.0	0.2	0.0	0.6	0.2	0.0
0, 0, -1	0.2	0.0	0.7	0.0	0.0	0.3
0, 0, +1	0.0	0.2	0.0	0.3	0.8	0.0
0, +1,-1	0.0	0.0	1.0	0.0	0.3	0.0
0,+1, 0	0.0	0.0	0.7	0.0	0.8	0.0
0,+1,+1	0.0	0.0	0.2	0.0	1.0	0.0
+1,-1,-1	0.0	1.6	2.4	0.0	0.6	0.0
+1,-1, 0	0.0	2.0	2.6	0.0	1.3	0.0
+1,-1,+1	0.0	1.7	1.9	0.0	1.5	0.0
+1, 0,-1	0.0	1.9	3.4	0.0	1.3	0.0
+1, 0, 0	0.0	2.8	4.3	0.0	2.5	0.0
+1, 0,+1	0.0	2.1	2.8	0.0	2.3	0.0
+1,+1,-1	0.0	1.5	3.1	0.0	1.5	0.0
+1,+1, 0	0.0	2.0	3.5	0.0	2.3	0.0
+1,+1,+1	0.0	1.7	2.7	0.0	2.3	0.0

^Thruster on-times based on 2,500 ft-lb-sec total momentum resolved into the indicated directions. Desat on-time divided into multi-pulse desat where appropiate (0,5,8,15 sec delay times)

Note: Desaturations can be repeated several times but cannot occur less than 23 seconds from the initiation of the previous desat.

Table S.4.2.3.9-1 Unlocked SARJ Constraints for EVA and Unisolated Exercise

Inboard of SARJs – Unisolated Exercise Not Allowed
(Covers case for EVA in APFR and EVA not in APFR for no unisolated exercise)
EVA 1, 2, 3, 4 and Contingency

EVA LOCATION/ CASE DESCRIPTION	EVAs	SARJ	UNISOL EXER	CMG MM	CMG MM	RS MCS HOLD					USTO HOLD					VRCS
				NO DESATS	WITH DESATS (NO ATV THRUSTERS)	SM-YPR	SM-YP + P-R	ATV-YPR	ATV-PY + SM-R	ATV-PY + P-R	SM-YPR	SM-YP + P-R	ATV-YPR	ATV-PY + SM-R	ATV-PY + P-R	
INBOARD OF SARJ'S – IN APFR	ALL EVAs + CONT	P AND/OR S:U	NOT OK	OK	OK	NOT OK	NOT OK	NOT OK	NOT OK	NOT OK	NOT OK	NOT OK	NOT OK	NOT OK	NOT OK	OK
INBOARD OF SARJ'S – IN APFR	ALL EVAs + CONT	P:L S:L	NOT OK	OK	OK	OK	OK	NOT OK	NOT OK	NOT OK	OK	OK	NOT OK	NOT OK	NOT OK	OK

Inboard of SARJs – Unisolated Exercise Included
(Covers case for EVA not in APFR with unisolated exercise)
EVA 1, 2 and Contingency

EVA LOCATION /CASE DESCRIPTION	EVAs	SARJ	UNISOL EXER	CMG MM	CMG MM	RS MCS HOLD					USTO HOLD					VRCS
				NO DESATS	WITH DESATS (NO ATV THRUSTERS)	SM-YPR	SM-YP + P-R	ATV-YPR	ATV-PY + SM-R	ATV-PY + P-R	SM-YPR	SM-YP + P-R	ATV-YPR	ATV-PY + SM-R	ATV-PY + P-R	
INBOARD OF SARJ'S – NOT IN APFR	ALL EVAs + CONT	P AND/OR S:U	OK	OK	OK	NOT OK	NOT OK	NOT OK	NOT OK	NOT OK	NOT OK	NOT OK	NOT OK	NOT OK	NOT OK	OK
INBOARD OF SARJ'S – NOT IN APFR	ALL EVAs + CONT	P:L S:L	OK	OK	OK	OK	OK	NOT OK	NOT OK	NOT OK	OK	OK	NOT OK	NOT OK	NOT OK	OK

On ESP-2 (Unisolated Exercise Not Allowed)
Contingency EVA Only

EVA LOCATION/ CASE DESCRIPTION	EVAs	SARJ	UNISOL EXER	CMG MM	CMG MM	RS MCS HOLD					USTO HOLD					VRCS
				NO DESATS	WITH DESATS (NO ATV THRUSTERS)	SM-YPR	SM-YP + P-R	ATV-YPR	ATV-PY + SM-R	ATV-PY + P-R	SM-YPR	SM-YP + P-R	ATV-YPR	ATV-PY + SM-R	ATV-PY + P-R	
ON ESP-2	CONT	P:U S:U	NOT OK	OK	OK	NOT OK	NOT OK	NOT OK	NOT OK	NOT OK	NOT OK	NOT OK	NOT OK	NOT OK	NOT OK	OK
ON ESP-2	CONT	P:L S:L	NOT OK	OK	OK	OK	OK	NOT OK	NOT OK	NOT OK	OK	OK	NOT OK	NOT OK	NOT OK	OK

Table S.4.2.3.9-1 Unlocked SARJ Constraints for EVA and Unisolated Exercise (continued)

On ESP-3 (Unisolated Exercise Not Allowed)
Contingency EVA Only

EVA LOCATION/ CASE DESCRIPTION	EVAs	SARJ	UNISOL EXER	CMG MM	CMG MM	RS MCS HOLD					USTO HOLD					VRCS
				NO DESATS	WITH DESATS (NO ATV THRUSTERS)	SM-YPR	SM-YP + P-R	ATV-YPR	ATV-PY + SM-R	ATV-PY + P-R	SM-YPR	SM-YP + P-R	ATV-YPR	ATV-PY + SM-R	ATV-PY + P-R	
ON ESP-3 (STBD SARJ LOCKED DUE TO EVA LOCATION)	CONT	P:U S:U	NOT OK	OK	OK	NOT OK	NOT OK	NOT OK	NOT OK	NOT OK	OK	OK	NOT OK	NOT OK	NOT OK	OK
ON ESP-3 (STBD SARJ LOCKED DUE TO EVA LOCATION)	CONT	P:L S:L	NOT OK	OK	OK	OK	OK	NOT OK	NOT OK	NOT OK	OK	OK	NOT OK	NOT OK	NOT OK	OK

On ELC1 or ELC3 (Unisolated Exercise Not Allowed)
ELC1: Contingency EVA Only
ELC3: EVA 4 and Contingency

EVA LOCATION/ CASE DESCRIPTION	EVAs	SARJ	UNISOL EXER	CMG MM	CMG MM	RS MCS HOLD					USTO HOLD					VRCS
				NO DESATS	WITH DESATS (NO ATV THRUSTERS)	SM-YPR	SM-YP + P-R	ATV-YPR	ATV-PY + SM-R	ATV-PY + P-R	SM-YPR	SM-YP + P-R	ATV-YPR	ATV-PY + SM-R	ATV-PY + P-R	
ON ELC1 (PORT SARJ LOCKED DUE TO EVA LOCATION)	CONT	P:L S:U	NOT OK	OK	OK	NOT OK	NOT OK	NOT OK	NOT OK	NOT OK	NOT OK	NOT OK	NOT OK	NOT OK	NOT OK	NOT OK
ON ELC3 (PORT SARJ LOCKED DUE TO EVA LOCATION)	EVA4 + CONT	P:L S:U	NOT OK	OK	OK	NOT OK	NOT OK	NOT OK	NOT OK	NOT OK	OK	OK	NOT OK	NOT OK	NOT OK	NOT OK
ON ELC1 OR ELC3 (PORT SARJ LOCKED DUE TO EVA LOCATION)	EVA4 (ELC3) + CONT (ELC1, ELC3)	P:L S:L	NOT OK	OK	OK	OK	OK	NOT OK	NOT OK	NOT OK	OK	OK	NOT OK	NOT OK	NOT OK	OK

On ELC2 or ELC4 (Unisolated Exercise Not Allowed)
ELC2: EVA 1 and Contingency
ELC4: Contingency EVA Only

EVA LOCATION/ CASE DESCRIPTION	EVAs	SARJ	UNISOL EXER	CMG MM	CMG MM	RS MCS HOLD					USTO HOLD					VRCS
				NO DESATS	WITH DESATS (NO ATV THRUSTERS)	SM-YPR	SM-YP + P-R	ATV-YPR	ATV-PY + SM-R	ATV-PY + P-R	SM-YPR	SM-YP + P-R	ATV-YPR	ATV-PY + SM-R	ATV-PY + P-R	
ON ELC2 (STBD SARJ LOCKED DUE TO EVA LOCATION)	EVA1 + CONT	P:U S:L	NOT OK	OK	NOT OK	NOT OK	NOT OK	NOT OK	NOT OK	NOT OK	NOT OK	NOT OK	NOT OK	NOT OK	NOT OK	NOT OK
ON ELC4 (STBD SARJ LOCKED DUE TO EVA LOCATION)	CONT	P:U S:L	NOT OK	OK	OK	NOT OK	NOT OK	NOT OK	NOT OK	NOT OK	NOT OK	NOT OK	NOT OK	NOT OK	NOT OK	NOT OK
ON ELC2 OR ELC4 (STBD SARJ LOCKED DUE TO EVA LOCATION)	EVA1 (ELC2) + CONT	P:L S:L	NOT OK	OK	OK	OK	OK	NOT OK	NOT OK	NOT OK	OK	OK	NOT OK	NOT OK	NOT OK	OK

Table S.4.2.3.9-1 Unlocked SARJ Constraints for EVA and Unisolated Exercise (continued)

On AMS (Unisolated Exercise Not Allowed)
Contingency EVA Only

EVA LOCATION/ CASE DESCRIPTION	EVAs	SARJ	UNISOL EXER	CMG MM	CMG MM	RS MCS HOLD					USTO HOLD					VRCS
				NO DESATS	WITH DESATS	SM-YPR	SM-YP + P-R	ATV-YPR	ATV-PY + SM-R	ATV-PY + P-R	SM-YPR	SM-YP + P-R	ATV-YPR	ATV-PY + SM-R	ATV-PY + P-R	
ON AMS (STBD SARJ LOCKED DUE TO EVA LOCATION)	Cont	P:U S:L	NOT OK	OK	OK	NOT OK	NOT OK	NOT OK	NOT OK	NOT OK	NOT OK	NOT OK	NOT OK	NOT OK	NOT OK	OK
ON AMS (STBD SARJ LOCKED DUE TO EVA LOCATION)	Cont	P:L S:L	NOT OK	OK	OK	OK	OK	NOT OK	NOT OK	NOT OK	OK	OK	NOT OK	NOT OK	NOT OK	OK

On JEF (Unisolated Exercise Not Allowed)
Contingency EVA Only

EVA LOCATION/ CASE DESCRIPTION	EVAs	SARJ	UNISOL EXER	CMG MM	CMG MM	RS MCS HOLD					USTO HOLD					VRCS
				NO DESATS	WITH DESATS (NO ATV THRUSTERS)	SM-YPR	SM-YP + P-R	ATV-YPR	ATV-PY + SM-R	ATV-PY + P-R	SM-YPR	SM-YP + P-R	ATV-YPR	ATV-PY + SM-R	ATV-PY + P-R	
ON JEF	Cont	P:U S:U	NOT OK	OK	OK	NOT OK	NOT OK	NOT OK	NOT OK	NOT OK	OK	OK	NOT OK	NOT OK	NOT OK	NOT OK
ON JEF	Cont	P:U S:L	NOT OK	OK	OK	NOT OK	NOT OK	NOT OK	NOT OK	NOT OK	OK	OK	NOT OK	NOT OK	NOT OK	NOT OK
ON JEF	Cont	P:L S:L	NOT OK	OK	OK	OK	OK	NOT OK	NOT OK	NOT OK	OK	OK	NOT OK	NOT OK	NOT OK	OK

Outboard of Port SARJ (Unisolated Exercise Not Allowed)
EVA 1, 2, 4, and Contingency

EVA LOCATION/ CASE DESCRIPTION	EVAs	SARJ	UNISOL EXER	CMG MM	CMG MM	RS MCS HOLD					USTO HOLD					VRCS
				NO DESATS	WITH DESATS (NO ATV THRUSTERS)	SM-YPR	SM-YP + P-R	ATV-YPR	ATV-PY + SM-R	ATV-PY + P-R	SM-YPR	SM-YP + P-R	ATV-YPR	ATV-PY + SM-R	ATV-PY + P-R	
OUTBOARD OF PORT SARJ (PORT SARJ LOCKED DUE TO EVA LOCATION)	EVA1/2 /4 + CONT	P:L S:U	NOT OK	OK	OK	NOT OK	NOT OK	NOT OK	NOT OK	NOT OK	NOT OK	NOT OK	NOT OK	NOT OK	NOT OK	NOT OK
OUTBOARD OF PORT SARJ (PORT SARJ LOCKED DUE TO EVA LOCATION)	EVA1/2 /4 + CONT	P:L S:L	NOT OK	OK	OK	OK	OK	NOT OK	NOT OK	NOT OK	OK	OK	NOT OK	NOT OK	NOT OK	OK

Table S.4.2.3.9-1 Unlocked SARJ Constraints for EVA and Unisolated Exercise (concluded)

Outboard of Starboard SARJ (Unisolated Exercise Not Allowed)
Contingency EVA Only

EVA LOCATION/ CASE DESCRIPTION	EVAs	SARJ	UNISOL EXER	CMG MM	CMG MM	RS MCS HOLD					USTO HOLD					VRCS
				NO DESATS	WITH DESATS (NO ATV THRUSTERS)	SM-YPR	SM-YP + P-R	ATV-YPR	ATV-PY + SM-R	ATV-PY + P-R	SM-YPR	SM-YP + P-R	ATV-YPR	ATV-PY + SM-R	ATV-PY + P-R	
OUTBOARD OF STBD SARJ (STBD SARJ LOCKED DUE TO EVA LOCATION)	Cont	P:U S:L	NOT OK	OK	OK	NOT OK	NOT OK	NOT OK	NOT OK	NOT OK	NOT OK	NOT OK	NOT OK	NOT OK	NOT OK	NOT OK
OUTBOARD OF STBD SARJ (STBD SARJ LOCKED DUE TO EVA LOCATION)	Cont	P:L S:L	NOT OK	OK	OK	OK	OK	NOT OK	NOT OK	NOT OK	OK	OK	NOT OK	NOT OK	NOT OK	OK

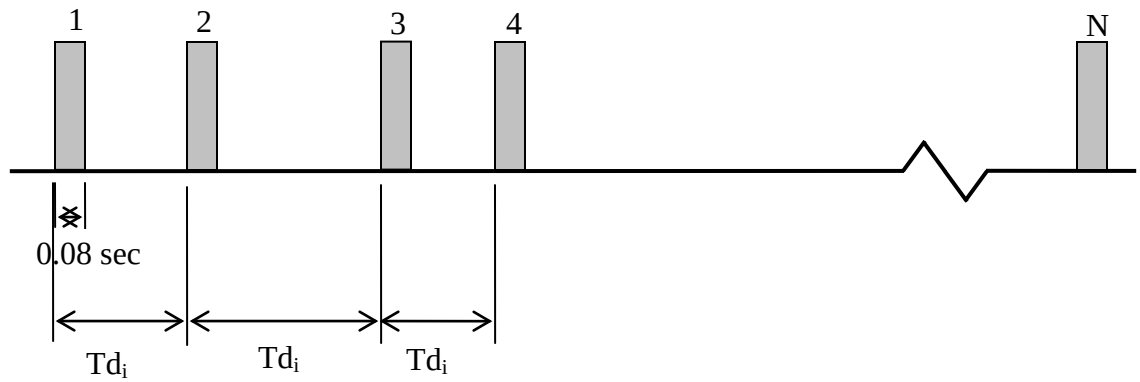

Td$_i$ is the minimum delay time between pulses

Td$_i$ = (Td) (sf$_i$)

Td is the target delay time

sf$_i$ (i = 1 to 10) is the Orbiter DAP delay time scale factor

Figure S.4.2.3.2.1.1-1 PRCS ALT DAP Unipolar Forcing Function

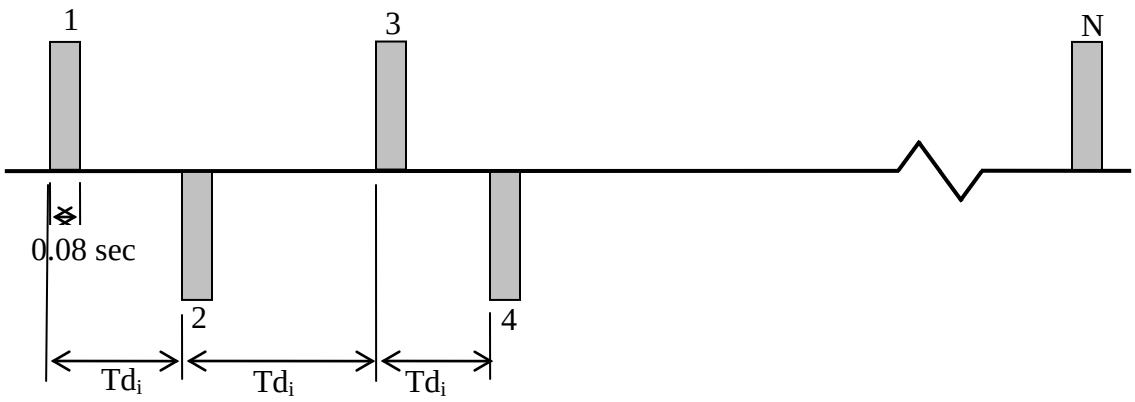

Td$_i$ is the minimum delay time between pulses

Td$_i$ = (Td) (sf$_i$)

Td is the target delay time

sf$_i$ (i = 1 to 10) is the Orbiter DAP delay time scale factor

Figure S.4.2.3.2.1.1-2 PRCS ALT DAP Bipolar Forcing Function

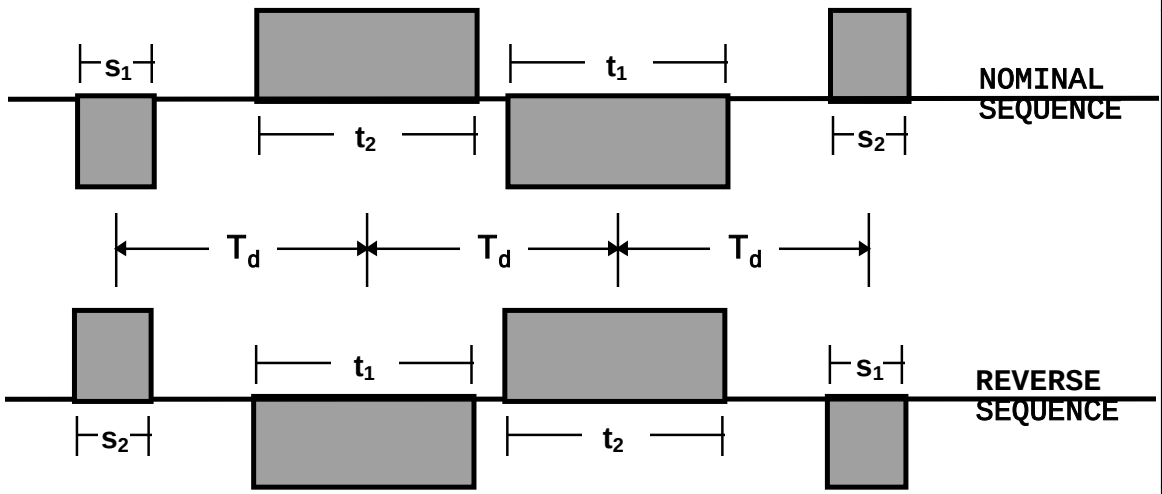

T_d = T/2 OR T DEPENDENT ON SIGN OF GENERALIZED FORCE

s_i = (SMALLER OF T/2 AND $2RL/\alpha_i$) > 0.08 SEC

t_i = (SMALLER OF T/2 AND $(2RL+MR)/\alpha_i$) > 0.08 SEC

i = 1 OR 2 COMPLEMENTARY JET SETS

NOTE: VALUES FOR $2RL/\alpha_i$ AND $(2RL+MR)/\alpha_i$ ARE ROUNDED UP TO THE NEXT HIGHER MULTIPLE OF 0.08 SEC

Figure S.4.2.3.2.1.1-3 VRCS Forcing Function

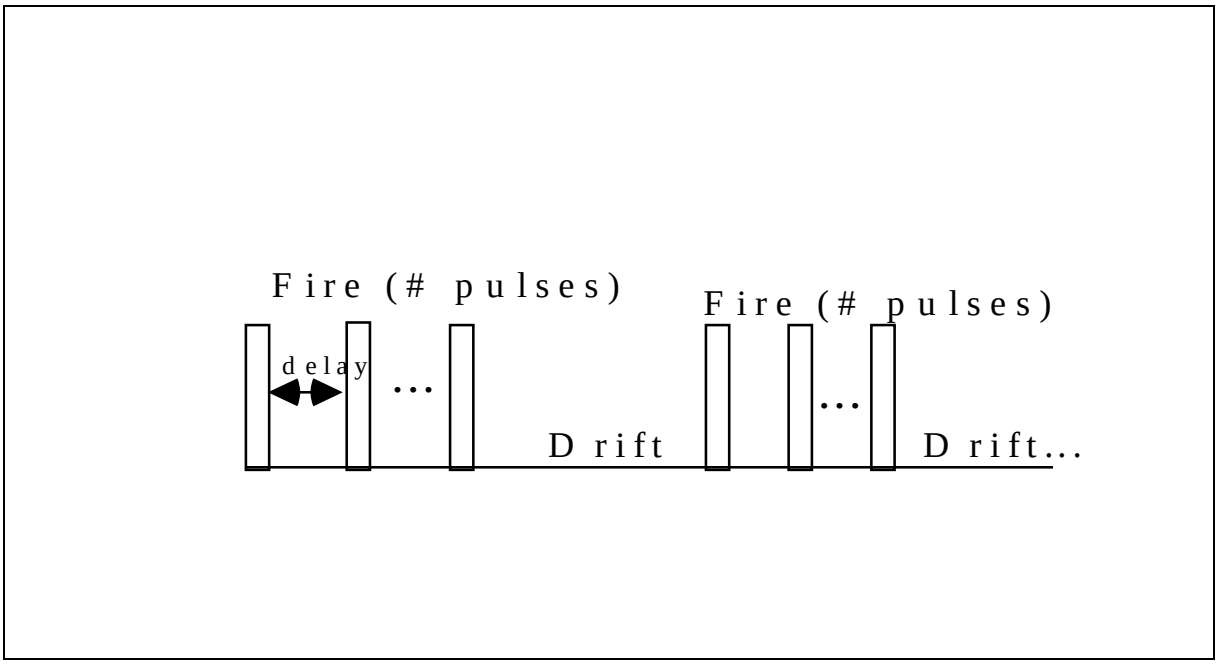

Figure S.4.2.3.2.1.1-4 One-sided Limit Cycle Pattern

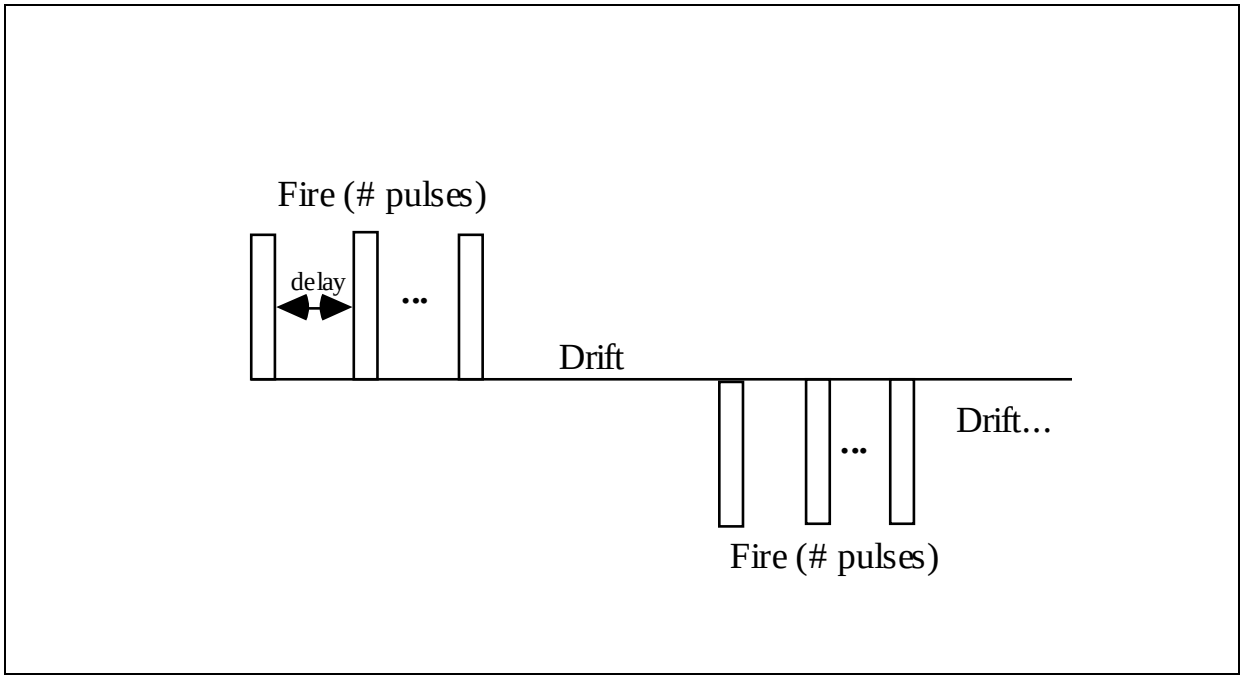

Figure S.4.2.3.2.1.1-5 Two-sided Limit Cycle Pattern

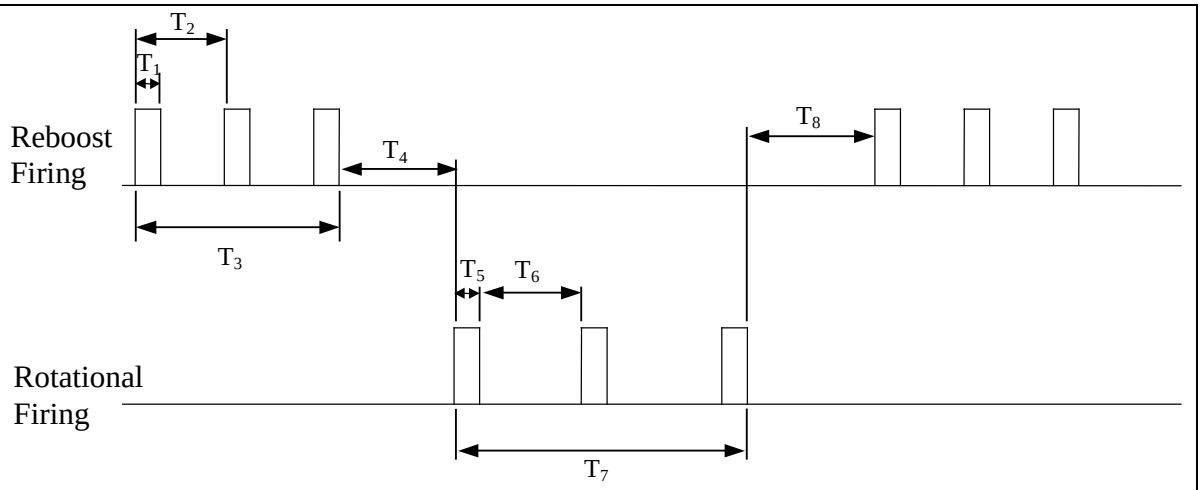

T_1 = Reboost Firing On-Time
T_2 = Reboost Firing Interval Time
T_3 = Reboost Firing Period
T_4 = Translation to Rotation Delay
T_5 = Alt On-Time
T_6 = Alt Delay Time
T_7 = Rotational Control Firing Period
T_8 = Rotation to Translation Delay

Figure S.4.2.3.2.1.2-1 Forcing Function for Shuttle Automatic Reboost of ISS

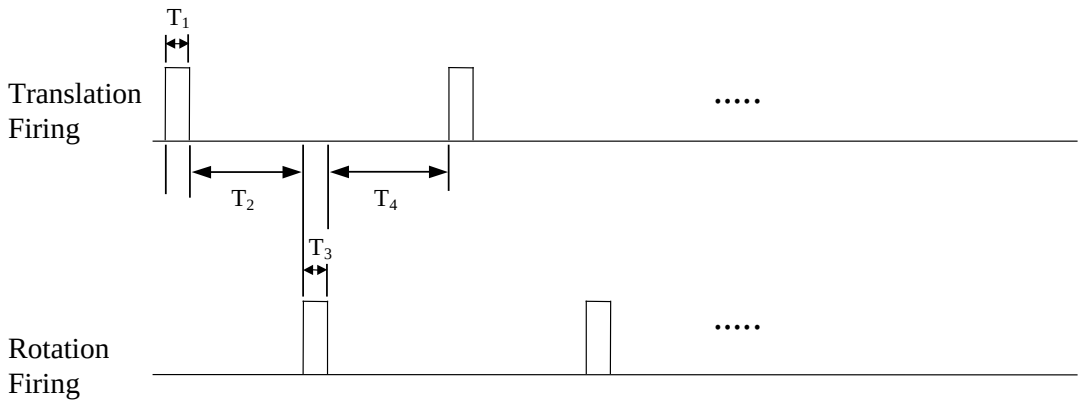

T_1 = Reboost Firing On-Time
T_2 = Translation to Rotation Delay
T_3 = Alt On-Time (PRCS) or Modal Period/2 (VRCS)
T_4 = Rotation to Translation Delay

Figure S.4.2.3.2.1.2-2 Forcing Function Profile for Shuttle Automatic Reboost Mode Cycling

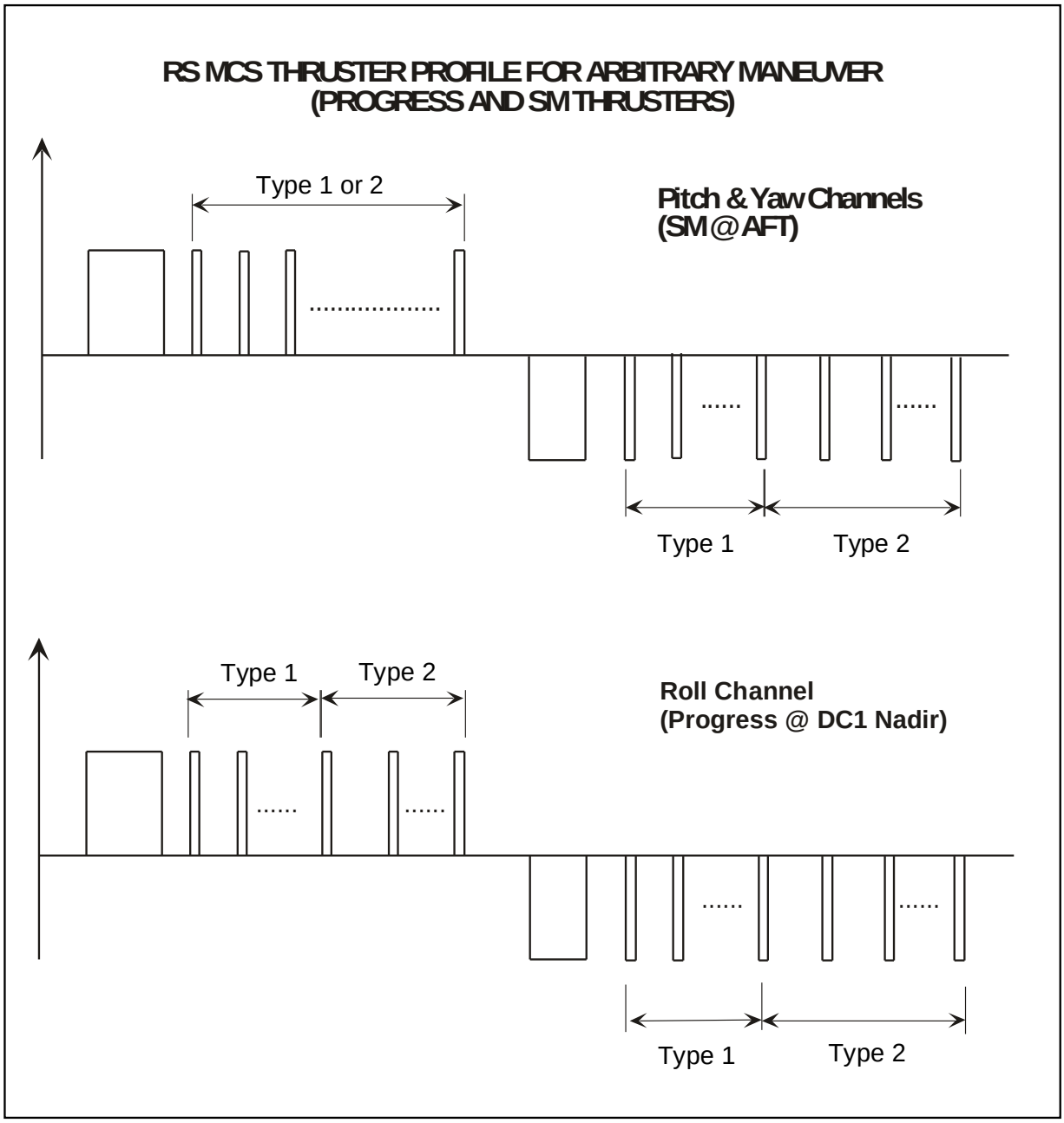

Figure S.4.2.3.2.4.1-1 RS MCS Thruster Profile for Arbitrary Maneuver (Progress and SM Thrusters)

RS MCS THRUSTER PATTERN FOR SINGLE ARBITRARY FIRING (PROGRESS AND SM THRUSTERS)

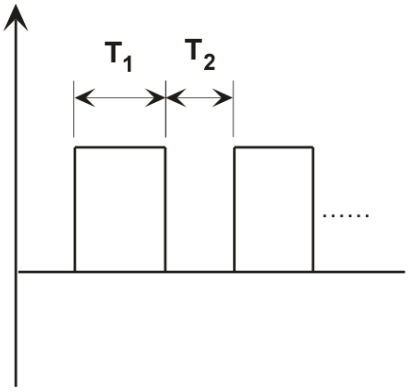

Roll Channel (Progress @ DC1 Nadir)	Pitch Channel (SM@Aft)	Yaw Channel (SM@Aft)
Type 1: T_1 = 0.1 - 1.4 sec T_2 = 3.0 - 3.5 sec	Type 1: T_1 = 0.1 - 1.0 sec T_2 = 1.0 - 1.5 sec	Type 1: T_1 = 0.1 - 3.5 sec T_2 = 1.0 - 1.5 sec
Type 2: T_1 = 0.1 - 0.2 sec T_2 = 3.0 - 27.0 sec	Type 2: T_1 = 0.1 - 0.2 sec T_2 = 1.0 - 28.0 sec	Type 2: T_1 = 0.1 - 0.2 sec T_2 = 1.0 - 45.0 sec

Notes:

1. These ranges account for any firing combination that occurred in more than 0.1% of all firings observed in maneuver simulations. Other combinations are possible, but will not repeat to excite structural modes.

Figure S.4.2.3.2.4.1-2 RS MCS Thruster Pattern for Single Arbitrary Firing (Progress and SM Thrusters)

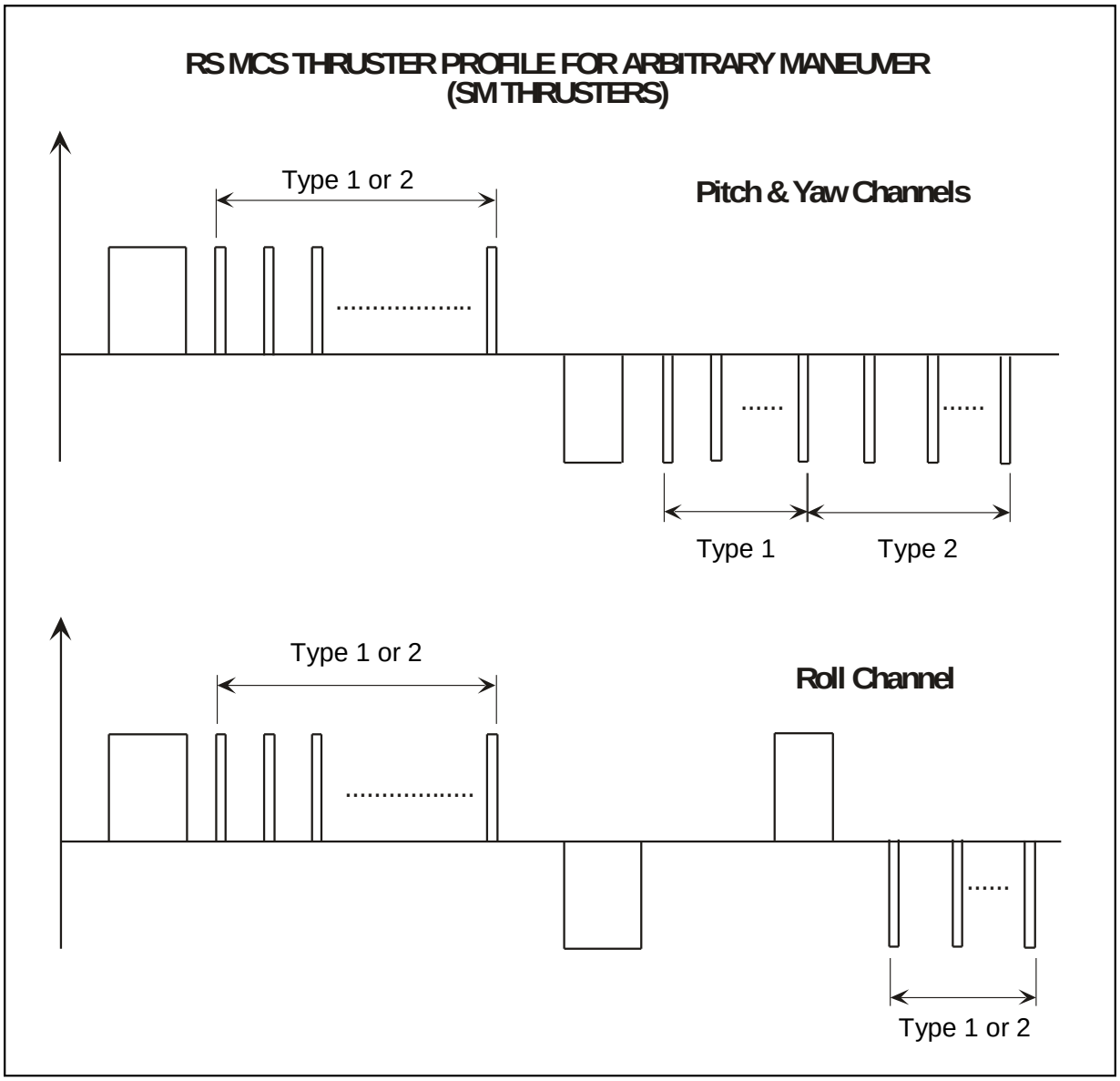

Figure S.4.2.3.2.4.1-3 RS MCS Thruster Profile for Arbitrary Maneuver (SM Thrusters)

RS MCS THRUSTER PATTERN FOR SINGLE ARBITRARY FIRING (SM THRUSTERS)

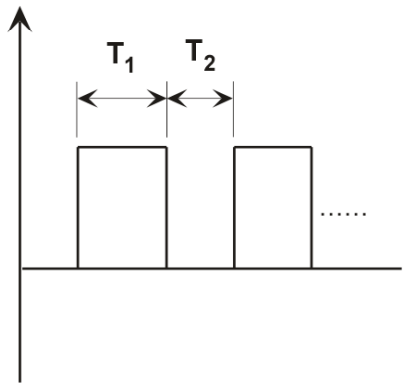

Roll Channel (SM@Aft)	Pitch Channel (SM@Aft)	Yaw Channel (SM@Aft)
Type 1: T_1 = 0.1 - 1.0 sec T_2 = 3.0 - 3.5 sec	Type 1: T_1 = 0.1 - 1.0 sec T_2 = 1.0 - 1.3 sec	Type 1: T_1 = 0.1 - 1.4 sec T_2 = 1.0 - 1.3 sec
Type 2: T_1 = 0.1 - 0.2 sec T_2 = 3.0 - 10.0 sec	Type 2: T_1 = 0.1 - 0.2 sec T_2 = 1.0 - 28.0 sec	Type 2: T_1 = 0.1 - 0.2 sec T_2 = 1.0 - 22.0 sec

Notes:
1. These ranges account for any firing combination that occurred in more than 0.1% of all firings observed in maneuver simulations. Other combinations are possible, but will not repeat to excite structural modes.

Figure S.4.2.3.2.4.1-4 RS MCS Thruster Pattern for Single Arbitrary Firing (SM Thrusters)

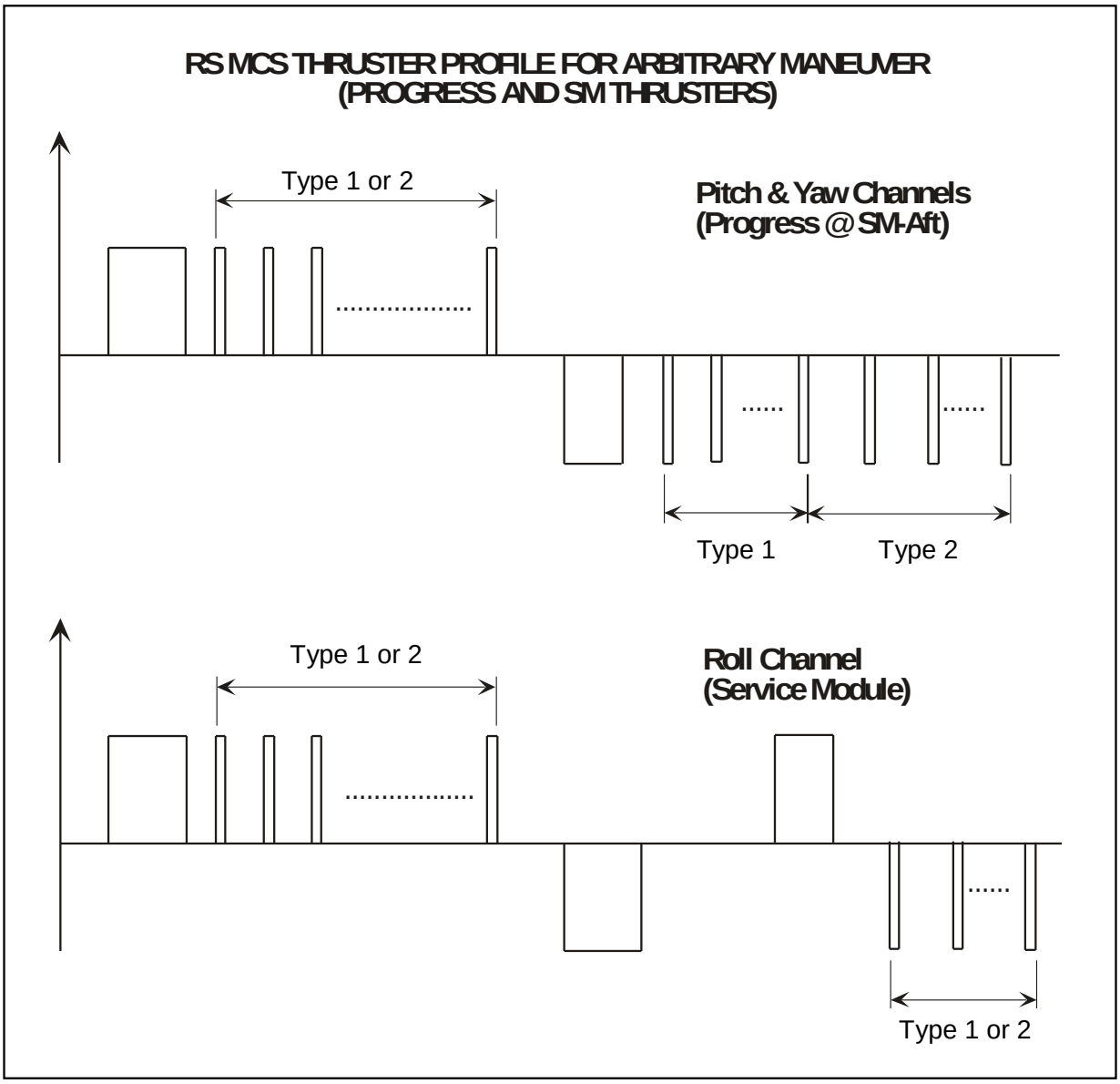

Figure S.4.2.3.2.4.1-5 RS MCS Thruster Profile for Arbitrary Maneuver (Progress and SM Thrusters)

RS MCS THRUSTER PATTERN FOR SINGLE ARBITRARY FIRING (PROGRESS AND SM THRUSTERS)

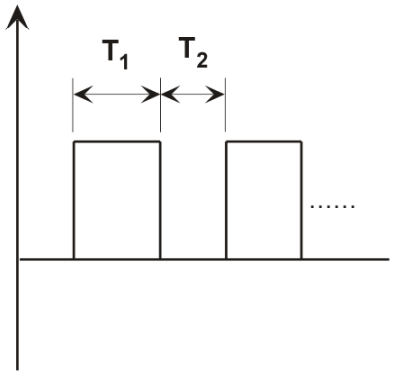

Roll Channel (Service Module)	Pitch Channel (Progress @Aft)	Yaw Channel (Progress @Aft)
Type 1: T_1 = 0.1 - 1.0 sec T_2 = 3.0 - 3.5 sec	Type 1: T_1 = 0.1 - 1.0 sec T_2 = 1.0 - 1.3 sec	Type 1: T_1 = 0.1 - 1.0 sec T_2 = 1.0 - 1.5 sec
Type 2: T_1 = 0.1 - 0.2 sec T_2 = 3.0 - 12.0 sec	Type 2: T_1 = 0.1 - 0.2 sec T_2 = 1.0 - 29.0 sec	Type 2: T_1 = 0.1 - 0.2 sec T_2 = 1.0 - 28.0 sec

Notes:
1. These ranges account for any firing combination that occurred in more than 0.1% of all firings observed in maneuver simulations. Other combinations are possible, but will not repeat to excite structural modes.

Figure S.4.2.3.2.4.1-6 RS MCS Thruster Pattern for Single Arbitrary Firing (Progress and SM Thrusters)

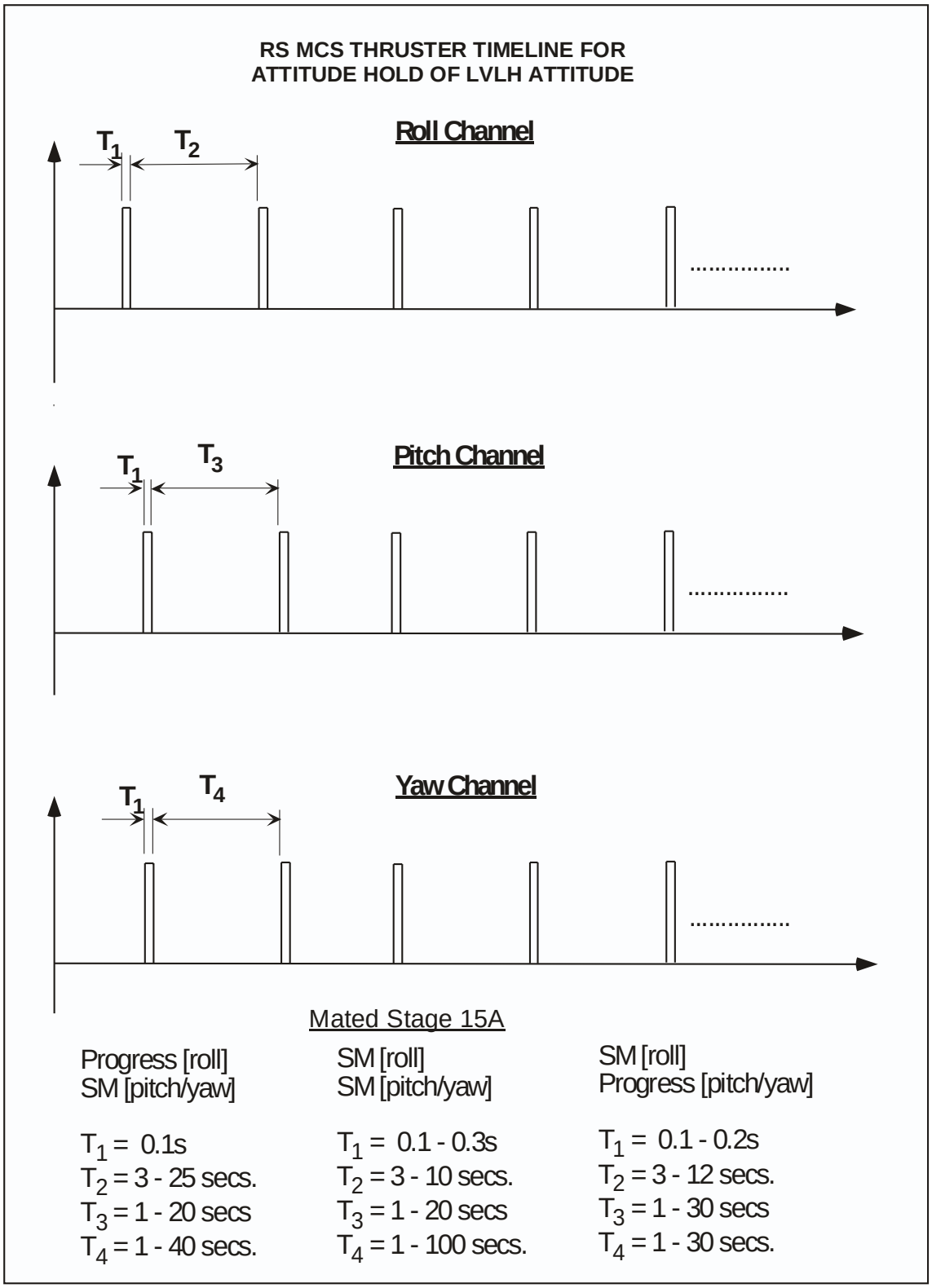

Figure S.4.2.3.2.4.1-7 RS MCS Thruster Timeline for Attitude Hold of LVLH Attitude

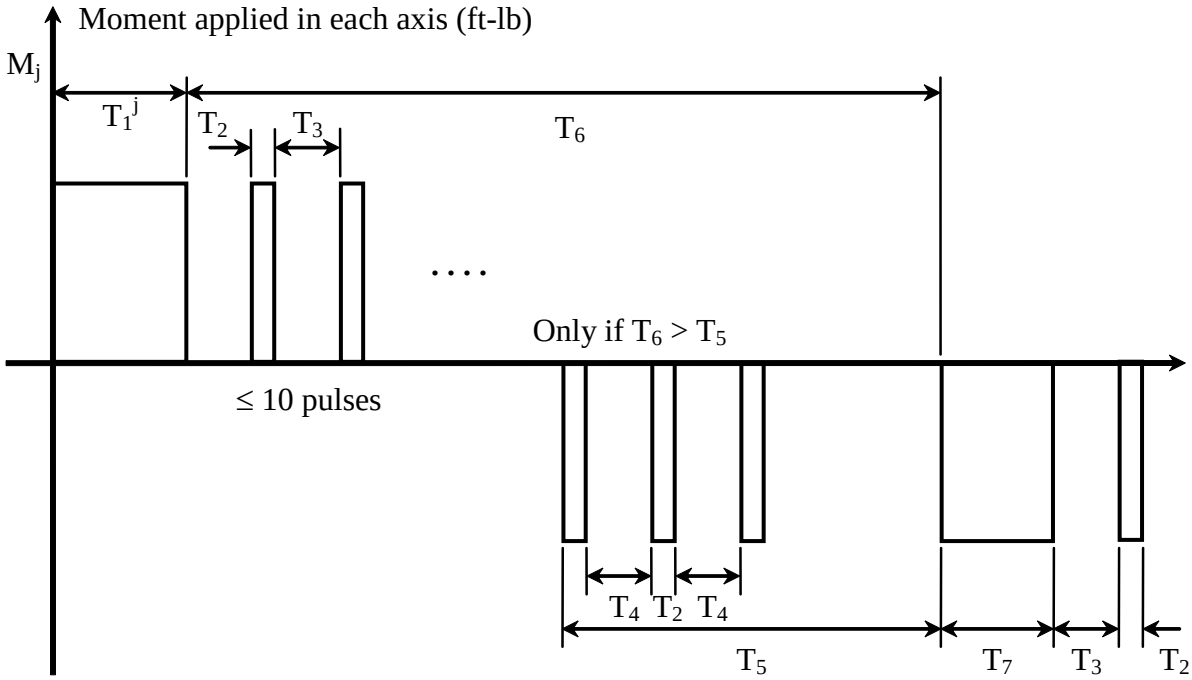

$T_1^j = 2 * \omega_j/\varepsilon_j \pm 5$ sec, $\omega_j < 0.2$ deg/sec
$T_2 = 0.1 – 0.2$ sec
$T_3 = 1.0 – 2.0$ sec
$T_4 = 1.2$ sec
$T_5 = 150 \pm 20$ sec
T_6 = maneuver_angle/wj, maneuver_angle < 70 deg
T_7 = 50% - 80% of T_1^j

where,
M_j = resultant moment due to jet firing (ft-lb)
(see Table S.4.2.3.2.4.1-1)
ε_j = resultant angular acceleration in each axis (deg/sec^2)
(see Table S.4.2.3.2.4.1-1)
ω_j = maneuver rate (deg/sec)

Figure S.4.2.3.2.4.1-8 SM MCS Thruster Timeline for ISS Attitude Control During SRMS or SSRMS OPS

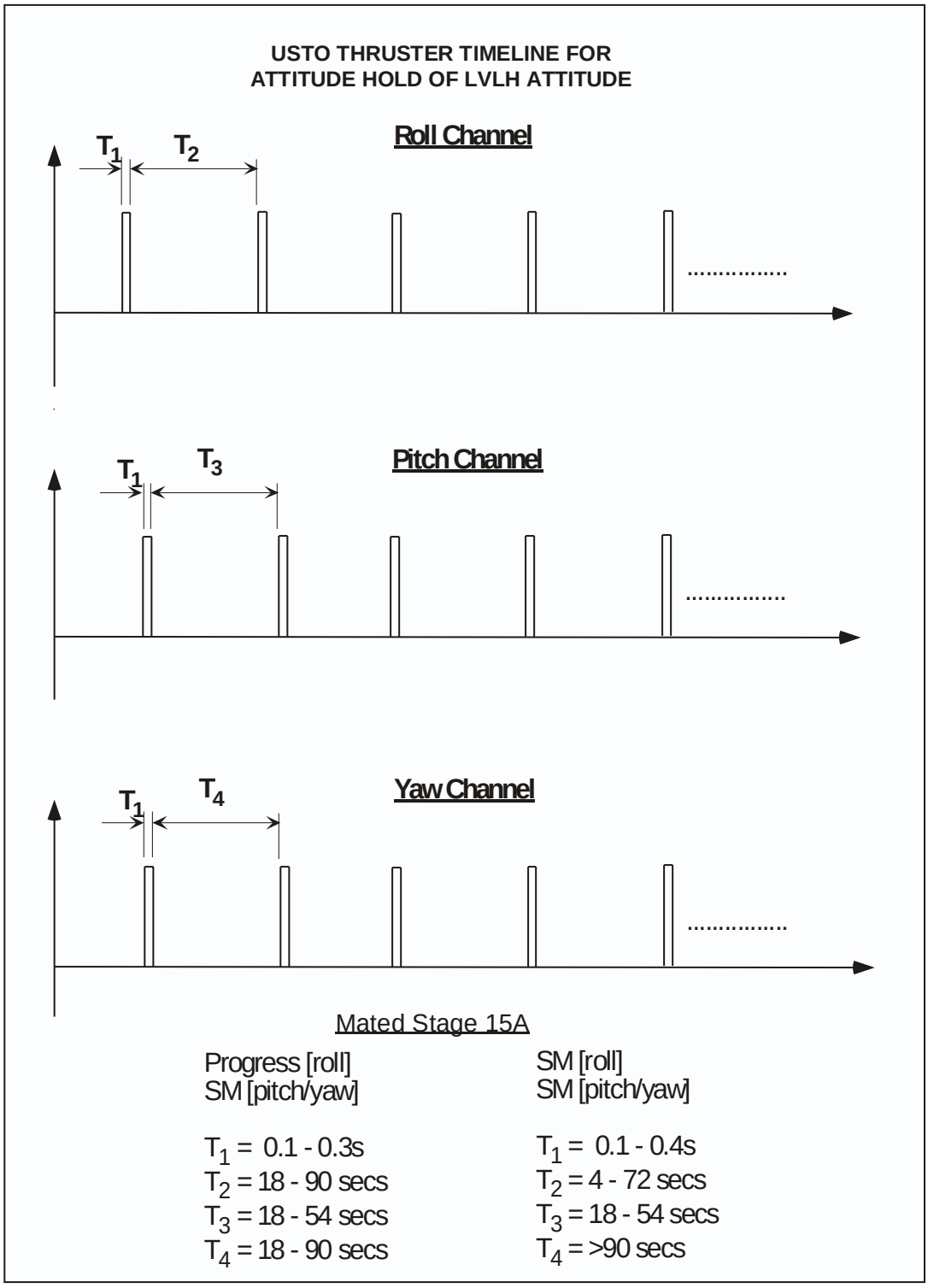

Figure S.4.2.3.2.4.5-1 USTO Thruster Timeline for Attitude Hold of LVLH Attitude

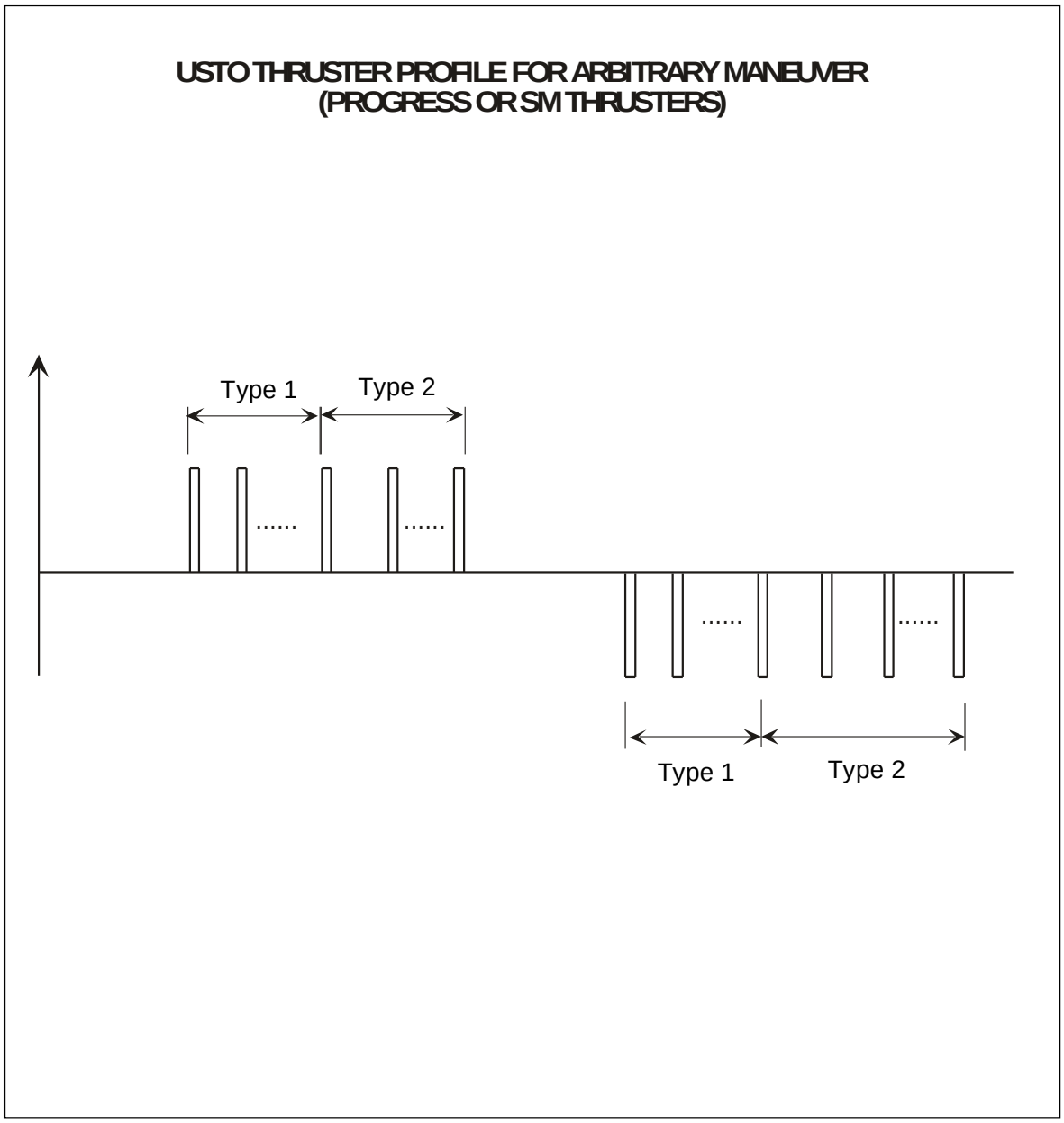

Figure S.4.2.3.2.4.5-2 USTO Thruster Profile for Arbitrary Maneuver (Progress or SM Thrusters)

USTO THRUSTER PATTERN FOR SINGLE ARBITRARY FIRING
(PROGRESS AND SM THRUSTERS)
Maneuver Manager Option 0

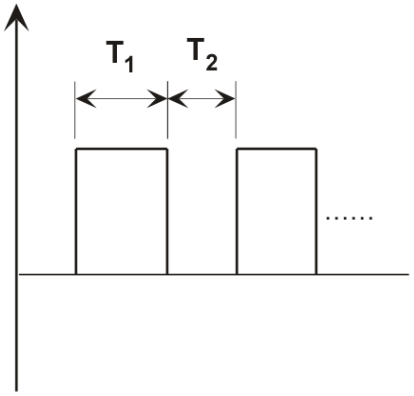

Roll Channel (Progress @ DC1 Nadir)	**Pitch Channel (Service Module)**	**Yaw Channel (Service Module)**
Type 1: T_1 = 0.2 - 2.0 sec T_2 = 2.0 - 10 sec	Type 1: T_1 = 0.2 - 0.5 sec T_2 = 3.5 - 10 sec	Type 1: T_1 = 0.2 - 1.4 sec T_2 = 2.5 - 10 sec
Type 2: T_1 = 0.2 - 0.4 sec T_2 = 4.0 - 100 sec	Type 2: T_1 = 0.2 - 0.4 sec T_2 = 4.0 - 100 sec	Type 2: T_1 = 0.2 - 0.4 sec T_2 = 4.0 - 100 sec

Notes:
1. These ranges account for any firing combination that occurred in more than 0.1% of all firings observed in maneuver simulations. Other combinations are possible, but will not repeat to excite structural modes.

Figure S.4.2.3.2.4.5-3 USTO Thruster Pattern for Single Arbitrary Firing
(Progress or SM Thrusters)
Maneuver Manager Option 0

USTO THRUSTER PATTERN FOR SINGLE ARBITRARY FIRING
(PROGRESS AND SM THRUSTERS)
Maneuver Manager Option 1

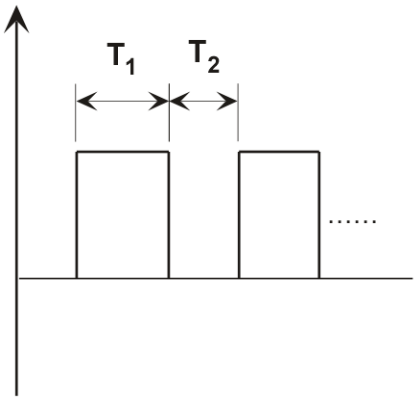

Roll Channel (Progress @ DC1 Nadir)	**Pitch Channel (Service Module)**	**Yaw Channel (Service Module)**
Type 1: T_1 = 0.2 - 1.1 sec T_2 = 2.0 - 10 sec	Type 1: T_1 = 0.2 - 0.4 sec T_2 = 3.5 - 18 sec	Type 1: T_1 = 0.2 - 0.7 sec T_2 = 3.0 - 10 sec
Type 2: T_1 = 0.2 - 0.4 sec T_2 = 4.0 - 100 sec	Type 2: T_1 = 0.2 - 0.4 sec T_2 = 4.0 - 100 sec	Type 2: T_1 = 0.2 - 0.4 sec T_2 = 4.0 - 100 sec

Notes:
1. These ranges account for any firing combination that occurred in more than 0.1% of all firings observed in maneuver simulations. Other combinations are possible, but will not repeat to excite structural modes.

Figure S.4.2.3.2.4.5-4 USTO Thruster Pattern for Single Arbitrary Firing (Progress or SM Thrusters) Maneuver Manager Option 1

USTO THRUSTER PATTERN FOR SINGLE ARBITRARY FIRING
(PROGRESS AND SM THRUSTERS)
Maneuver Manager Option 2

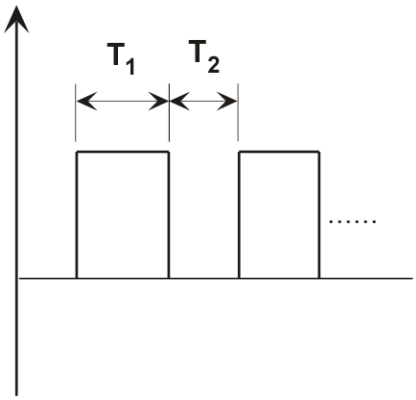

Roll Channel (Progress @ DC1 Nadir)	**Pitch Channel (Service Module)**	**Yaw Channel (Service Module)**
Type 1: T_1 = 0.2 - 1.1 sec T_2 = 2.0 - 10 sec	Type 1: T_1 = 0.2 - 0.4 sec T_2 = 3.5 - 18 sec	Type 1: T_1 = 0.2 - 0.8 sec T_2 = 3.0 - 10 sec
Type 2: T_1 = 0.2 - 0.4 sec T_2 = 4.0 - 100 sec	Type 2: T_1 = 0.2 - 0.4 sec T_2 = 4.0 - 100 sec	Type 2: T_1 = 0.2 - 0.4 sec T_2 = 4.0 - 100 sec

Notes:
1. These ranges account for any firing combination that occurred in more than 0.1% of all firings observed in maneuver simulations. Other combinations are possible, but will not repeat to excite structural modes.

Figure S.4.2.3.2.4.5-5 USTO Thruster Pattern for Single Arbitrary Firing
(Progress or SM Thrusters)
Maneuver Manager Option 2

USTO THRUSTER PATTERN FOR SINGLE ARBITRARY FIRING
(SM THRUSTERS)
Maneuver Manager Option 0

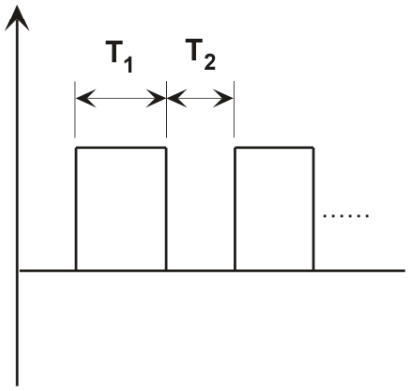

Roll Channel (Service Module)	**Pitch Channel (Service Module)**	**Yaw Channel (Service Module)**
Type 1: T_1 = 0.2 - 4.0 sec T_2 = 2.0 - 10 sec	Type 1: T_1 = 0.2 - 0.5 sec T_2 = 3.5 - 10 sec	Type 1: T_1 = 0.2 - 0.5 sec T_2 = 3.5 - 10 sec
Type 2: T_1 = 0.2 - 0.4 sec T_2 = 4.0 - 100 sec	Type 2: T_1 = 0.2 - 0.4 sec T_2 = 4.0 - 100 sec	Type 2: T_1 = 0.2 - 0.4 sec T_2 = 4.0 - 100 sec

Notes:
1. These ranges account for any firing combination that occurred in more than 0.1% of all firings observed in maneuver simulations. Other combinations are possible, but will not repeat to excite structural modes.

Figure S.4.2.3.2.4.5-6 USTO Thruster Pattern for Single Arbitrary Firing
(SM Thrusters)
Maneuver Manager Option 0

USTO THRUSTER PATTERN FOR SINGLE ARBITRARY FIRING
(SM THRUSTERS)
Maneuver Manager Option 1

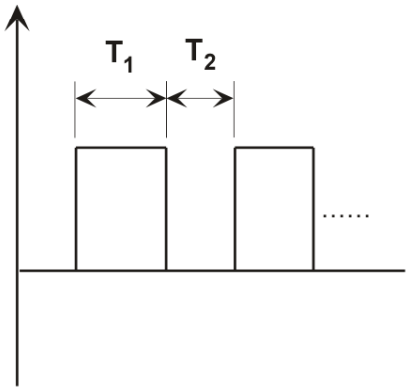

Roll Channel (Service Module)	**Pitch Channel (Service Module)**	**Yaw Channel (Service Module)**
Type 1: T_1 = 0.2 - 3.0 sec T_2 = 1.0 - 10 sec	Type 1: T_1 = 0.2 - 0.4 sec T_2 = 3.5 - 10 sec	Type 1: T_1 = 0.2 - 0.4 sec T_2 = 3.5 - 10 sec
Type 2: T_1 = 0.2 - 0.4 sec T_2 = 4.0 - 100 sec	Type 2: T_1 = 0.2 - 0.4 sec T_2 = 4.0 - 100 sec	Type 2: T_1 = 0.2 - 0.4 sec T_2 = 4.0 - 100 sec

Notes:
1. These ranges account for any firing combination that occurred in more than 0.1% of all firings observed in maneuver simulations. Other combinations are possible, but will not repeat to excite structural modes.

Figure S.4.2.3.2.4.5-7 USTO Thruster Pattern for Single Arbitrary Firing
(SM Thrusters)
Maneuver Manager Option 1

USTO THRUSTER PATTERN FOR SINGLE ARBITRARY FIRING
(SM THRUSTERS)
Maneuver Manager Option 2

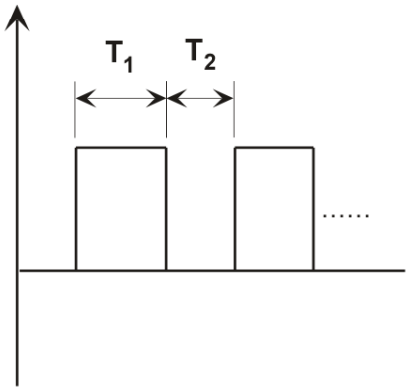

Roll Channel (Service Module)	**Pitch Channel (Service Module)**	**Yaw Channel (Service Module)**
Type 1: T_1 = 0.2 - 3.1 sec T_2 = 0.9 - 10 sec	Type 1: T_1 = 0.2 - 0.4 sec T_2 = 3.5 - 10 sec	Type 1: T_1 = 0.2 - 0.4 sec T_2 = 3.5 - 10 sec
Type 2: T_1 = 0.2 - 0.4 sec T_2 = 4.0 - 100 sec	Type 2: T_1 = 0.2 - 0.4 sec T_2 = 4.0 - 100 sec	Type 2: T_1 = 0.2 - 0.4 sec T_2 = 4.0 - 100 sec

Notes:
1. These ranges account for any firing combination that occurred in more than 0.1% of all firings observed in maneuver simulations. Other combinations are possible, but will not repeat to excite structural modes.

Figure S.4.2.3.2.4.5-8 USTO Thruster Pattern for Single Arbitrary Firing
(SM Thrusters)
Maneuver Manager Option 2

S.4.3 ORBITER AND ISS MATH MODELS

S.4.3.1 Orbiter Structural Math Models
Documented in Appendix S of NSTS-21000-IDD-ISS.

S.4.3.1.1 Orbiter Beam Element Model
Documented in Appendix S of NSTS-21000-IDD-ISS.

S.4.3.1.2 Orbiter APAS Stiffness Model
Documented in Appendix S of NSTS-21000-IDD-ISS.

S.4.3.1.3 Reserved

S.4.3.1.4 Orbiter ODS Flexure
Documented in Appendix S of NSTS-21000-IDD-ISS.

S.4.3.2 ISS Structural Math Models

S.4.3.2.1 Surface Geometry Math Models
The surface geometry models for Shuttle approach and separation are shown in Figures S.4.3.2.1-1 and S.4.3.2.1-2. The ISS solar arrays may be rotated to angles ranging from 0° to 360°. The FGB and SM solar arrays have 16 angles, or sun zones, at which they may be stopped. The angle conventions for the ISS solar arrays and sun zone definitions for the SM solar arrays are documented in Appendix S of NSTS-21000-IDD-ISS.

Each SM solar array has a hardstop, a region through which the array is physically unable to rotate. Table S.4.3.2.1-1 documents the location of the hardstops.

S.4.3.2.2 Structural Math Models
The ISS structural math models for loads and control/stability analyses shall be described in Boeing memorandum, “ISS VAC-ULF6 Integrated Loads and Dynamics Integrated Model,” EID684-14214, delivered with the structural math models to be used for Flight Readiness Review (FRR) analyses. This includes the component level models, ISS system models, and mated ISS/Shuttle system models.

S.4.3.2.2.1 US Solar Array Torsion Frequency When Unlocked
Documented in Appendix S of NSTS-21000-IDD-ISS.

S.4.3.2.3 Government Furnished Equipment (GFE)/ISS Component Stiffness Models

S.4.3.2.3.1 APFR Stiffness
Documented in Appendix S of NSTS-21000-IDD-ISS.

Table S.4.3.2.1-1 SM Solar Array Hardstop Definition

	Hardstop Range (1)	
Array	Angle(2)	Zone(3)
SM Port	339.5° - 358°	1 and 16
SM Starboard	2° - 20.5°	1 and 2

Notes:
1) Hardstop range refers to the area through which the solar array is physically unable to rotate.
2) Angle refers to the exact angles through which the solar array is unable to rotate using the joint angle convention defined in Appendix S of NSTS-21000-IDD-ISS, Figure S.4.3.2.1-3.
3) Zone refers to the two zones that are on either side of the hardstop. Zones are defined in Appendix S of NSTS-21000-IDD-ISS, Figure S.4.3.2.1-3.

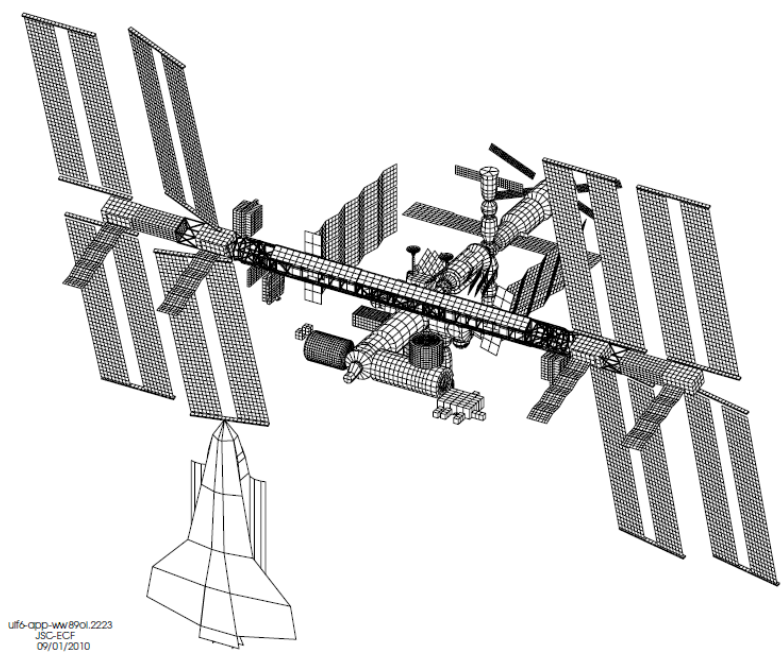

Figure S.4.3.2.1-1 ISS Plume Geometry Model for Shuttle Approach

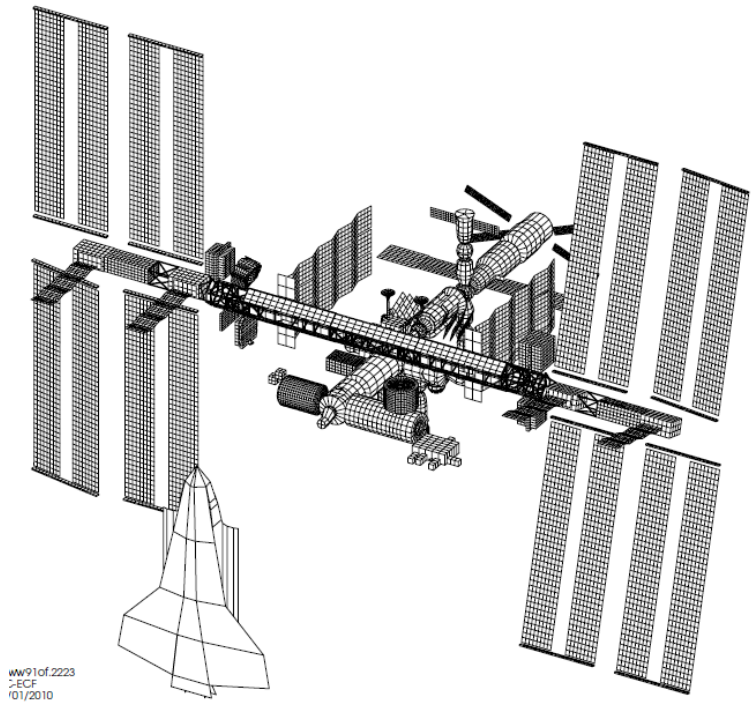

Figure S.4.3.2.1-2 ISS Plume Geometry Model for Shuttle Separation

S.5.0 RESERVED
TBD

S.6.0 ENVIRONMENTAL CONTROL INTERFACES

S.6.1 Passive Thermal Control (PTC)

See Section S.6.1 of Appendix S of NSTS-21000-IDD-ISS.

S.6.2 Environmental Control

See Section S.6.2 of Appendix S of NSTS-21000-IDD-ISS.

S.6.3 Environmental Control and Life Support (ECLS) Resource Transfer

See Section S.6.3 of Appendix S of NSTS-21000-IDD-ISS.

S.7.0 ELECTRICAL POWER INTERFACES

S.7.0.1 Mission-unique Interfaces

Applicability of Assembly Power Conversion Unit (APCU) or Station-to-Shuttle Power Transfer System (SSPTS) implementation is specified in the mission-specific Flight Requirements Document (FRD).

S.7.1 Electrical Power Accommodations

See Section S.7.1 of Appendix S of NSTS-21000-IDD-ISS.

S.7.2 Low Voltage Power

See Section S.7.2 of Appendix S of NSTS-21000-IDD-ISS.

S.7.3 High Voltage Power

See Section S.7.3 of Appendix S of NSTS-21000-IDD-ISS.

S.8.0 AVIONICS INTERFACES

S.8.0.1 Mission-unique Interfaces
Not Applicable (N/A)

S.8.1 Radio Frequency (RF) Interfaces
See Section S.8.1 of Appendix S of NSTS-21000-IDD-ISS.

S.8.2 1553B Data Bus
See Section S.8.2 of Appendix S of NSTS-21000-IDD-ISS.

S.8.3 Audio Central Control Network Interface
See Section S.8.3 of Appendix S of NSTS-21000-IDD-ISS.

S.8.4 Closed Circuit Television (CCTV) Video Control Unit Interface
See Section S.8.4 of Appendix S of NSTS-21000-IDD-ISS.

S.8.5 Orbiter/ISS Functional Block Diagram
See Section S.8.5 of Appendix S of NSTS-21000-IDD-ISS.

S.8.6 Portable Electrical Equipment
See Section S.8.6 of Appendix S of NSTS-21000-IDD-ISS.

S.9.0 ON-ORBIT STATION SOFTWARE INTERFACES

S.9.0.1 Mission-specific Interface Requirements

The interfaces specified herein are applicable to ISS Assembly Flight ULF6 only. The content of this document tailors NSTS-21000-IDD-ISS, Appendix S, Section S.9.0, On-Orbit Station Software Interfaces, for this specific use. Figure S.9.0.1-1 illustrates the ISS/OIU on-orbit interfaces for Flight ULF6. Table S.9.0.1-1 identifies 1553 buses and channel/controller setups for the ISS/OIU on-orbit interfaces for Flight ULF6.

S.9.0.1.1 Computer Systems Interfaces

The OIU is capable of interfacing via 1553 protocol to computer systems in the Orbiter cargo bay and to computer systems on the ISS. The OIU is capable of interfacing as a 1553 Bus Controller or as a 1553 Remote Terminal. The computer systems to which the OIU interfaces on this flight are described in the following subparagraphs.

S.9.0.1.1.1 Guidance, Navigation, and Control (GNC) Computer Interface

The purpose of the GNC Computer Interface with the OIU is to allow the Crew/Ground to determine the status of the ISS systems and to issue Crew/Ground commands to the ISS while the Shuttle Orbiter is docked to the ISS. The GNC Multiplexer/Demultiplexer (MDM) provides a passthrough interface to the Command and Control (C&C) MDM for both commands and telemetry.

S.9.0.1.1.1.1 OIU Outputs to GNC Computer

OIU outputs to the GNC computer (information only) are referenced in International Signal List Collector Drawing, EID 684-10411. OIU commands transmitted to the GNC Computer are transmitted in accordance with Section S.9.4.4.2.5 of NSTS-21000-IDD-ISS.

S.9.0.1.1.1.2 OIU Inputs from GNC Computer

OIU inputs from the GNC (information only) are referenced in EID 684-10411. This data shall be transmitted at a rate of three messages (96 words) each 100 ms (10 Hz), with the entire group repeating every 10 seconds. Messages on this interface shall be transferred in accordance with Section S.9.4.4.2.6 of NSTS-21000-IDD-ISS.

S.9.0.1.1.2 Space-to-Space Communication System (SSCS) Interface

The purpose of the SSCS interface with the OIU is to allow the Crew/Ground to determine the status of the ISS systems and to issue Crew/Ground commands to the ISS while the Shuttle Orbiter is in proximity to the ISS, but not docked. The Orbiter Space-to-Space Orbiter Radio (SSOR) and the Station Space-to-Space Station Radio (SSSR), both of which are components of the SSCS, provide a passthrough interface to the C&C MDM for both commands and telemetry.

S.9.0.1.1.2.1 OIU Outputs to SSCS

OIU outputs to the SSCS are transmitted directly to the SSOR. Commands to the SSOR shall be in accordance with S.9.4.4.2.3 of NSTS-21000-IDD-ISS and are referenced in Orbiter Command and Data Annex, International Space Station-Utilization and Logistics Flight6, NSTS 21507, Annex 4 (MIP, Annex 4).

S.9.0.1.1.2.2 OIU Inputs from the SSCS
OIU inputs from the SSCS are received directly from the SSOR and are referenced in MIP, Annex 4. Telemetry data shall be transmitted at a rate of two messages each 100 ms (10 Hz), with the entire group repeating every 10 seconds. The OIU also receives a one-word message from the SSOR containing the processing frame count. The frame count message is received each 100 ms (10 Hz). Messages on this interface shall be transferred in accordance with Section S.9.4.4.2.4 of NSTS-21000-IDD-ISS.

S.9.0.1.1.3 Alpha Magnetic Spectrometer-02 (AMS-02) Computer Interface
The purpose of the AMS-02 computer interface with the OIU is to allow the Ground to determine the status of the AMS-02 systems and to issue Ground commands to the AMS-02 while the AMS-02 is in the Orbiter cargo bay. The AMS-02 computer interface to the OIU is described in detail in ICD-A-21507, Shuttle Orbiter/AMS-02 Cargo Element Interfaces. The AMS-02-to-OIU interface described in this on-orbit requirement ICD is based on information in ICD-A-21507 and is sufficient to configure the OIU with respect to the AMS-02.

S.9.0.1.1.3.1 OIU Outputs to AMS-02
OIU outputs to the AMS-02 occur only while the AMS-02 is in the Orbiter cargo bay. Commands to the AMS-02 shall be in accordance with S.9.4.4.2.3 of NSTS-21000-IDD-ISS and are referenced in MIP, Annex 4, NSTS 21507.

S.9.0.1.1.3.2 OIU Inputs from the AMS-02
Inputs directly to the OIU from the AMS-02 occur only while the AMS-02 is in the Orbiter cargo bay. OIU inputs from the AMS-02 are referenced in MIP, Annex 4, NSTS 21507. Telemetry data shall be transmitted at a rate of two messages every 100 ms (10 Hz), with the entire group repeating every 10 seconds. Messages on this interface shall be transferred in accordance with Section S.9.4.4.2.4 of NSTS-21000-IDD-ISS.

S.9.0.1.2 Reserved

S.9.0.1.3 Frame Structure
The subframe allocations for the transfer of commands from the OIU to the ISS elements, directly and via the SSOR, are defined in Table S.9.0.1.3-1. The 1553 allocations for the transfer of telemetry data from an ISS element to the OIU, directly and via the SSOR, are defined in Table S.9.0.1.5-1.

S.9.0.1.4 Commands Through the Payload Signal Processor (PSP)
OIU and Station command data load blocks shall be formatted in accordance with Section S.9.4.3.2.1 of NSTS-21000-IDD-ISS. Table S.9.0.1.4-1, Command Destination Routing Codes, identifies the command routing codes to be used for commanding the OIU, the SSOR (Encryption Keys), and the ISS elements.

S.9.0.1.5 Telemetry Data Through the Payload Data Interleaver (PDI)
The OIU shall be capable of providing telemetry data to the PDI in accordance with the OIU PDI modes (OIU Formats) identified in Table S.9.0.1.5-1, Mission ULF6 Telemetry Format Description.

S.9.0.1.6 Remote Terminal Address

Table S.9.0.1.6-1 identifies the 1553 bus addresses assigned to each Remote Terminal (RT) and Bus Controller (BC) for ISS element-to-OIU communication and for SSOR-to-OIU communication.

S.9.0.1.7 Subaddress Utilization

Each remote terminal shall utilize 1553 subaddresses dedicated to defined interface mechanisms. Table S.9.0.1.7-1 contains the subaddress assignments for the SSOR and the ISS MDMs as RTs to the OIU as BC. Table S.9.0.1.7-2 contains the RT subaddress assignments for the OIU as an RT to the GNC MDM.

Table S.9.0.1-1 1553B Bus Setup For OIU On-orbit Interfaces

Vehicle	Bus	OIU Bus	Channel	OIU Mode
Orbiter	1-BUS1A	1*	A	BC
Orbiter	1-BUS1B	1	B	BC
Orbiter	1-BUS2A	2*	A	BC
Orbiter	1-BUS2B	2	B	BC
ISS	LB ORB-N2-1	3	A	BC
ISS	LB ORB-N2-1	3*	A	RT
ISS	LB ORB-N2-1	3	B	BC
ISS	LB ORB-N2-1	3	B	RT
ISS	LB ORB-N2-2	4*	A	BC
ISS	LB ORB-N2-2	4	A	RT
ISS	LB ORB-N2-2	4	B	BC
ISS	LB ORB-N2-2	4	B	RT

* Indicates the OIU power-on default setup for the bus.

Table S.9.0.1.3-1 Time Slot Assignments for Command Transfers

Logical Destination	Logical Device	OIU Mode	Processing Frame	Sub Frame
GNC	GNC	BC	All	1
GNC	GNC	RT	All	3
SSOR-SC	SSOR	BC	All	3
SSOR-SC	SSOR	RT	N/A	N/A
SSOR-EK	SSOR	BC	All	3
SSOR-EK	SSOR	RT	N/A	N/A
AMS	AMS	BC	All	1
AMS	AMS	RT	N/A	N/A
MDMX-SC	MDMX	BC	All	1
MDMX-SC	MDMX	RT	N/A	N/A
MDMX-DL	MDMX	BC	All	6
MDMX-DL	MDMX	RT	N/A	N/A

Table S.9.0.1.4-1 Command Destination Routing Codes

OIU Routing Code	Source	Logical Destination	Comments
0	MEDS or MCC-H	OIU	OIU Configuration Commands
1	MEDS or MCC-H	GNC	ISS commands; all commands to GNC MDM for forwarding to the C&C MDM for internal ISS routing. (see: 684-10411)
2	MEDS or MCC-H	SSOR-SC	ISS commands sent via the OIU and SSOR to the C&C MDM for internal ISS routing. (see: 684-10411)
3	MEDS or MCC-H	SSOR-EK	Commands sent via the OIU to the SSOR (SSOR is final destination; e.g., encryption key commands).
7	MCC-H	AMS	AMS-02 commands (see: MIP Annex 4)
241	MEDS or MCC-H	MDMX-SC	GNC specific commands (see: 684-10411)
242	MCC-H	MDMX-DL	Data Load Commands for MDM in Diagnostic Mode. (see SSP 30261:004)

Table S.9.0.1.5-1 Mission ULF6 Telemetry Format Description

OIU PDI Mode (Note 1 & 2)	Logical Device	Device Format Content	Sub-Frame	Subaddresses or Subaddress Table	Number of Data Words
250	MDMX	Data Dump	7	S.9.0.1.7-1	96
251	MDMX	BST Dump	4	S.9.0.1.7-1	64
254	OIU	OIU Error Log Dump	N/A	N/A	44
255*	OIU	N/A	N/A	N/A	N/A
(Note 4)	SSOR	Telemetry Data, Frame Count	1	SAs 19,20,18	32, 7, 1
(Note 4)	AMS	Telemetry (Status) Data	3	S.9.0.1.7-1	64
(Note 4)	GNC	Telemetry Data	0	S.9.0.1.7-2	96

Notes:

1) Each OIU PDI mode is defined for its default configuration in the OIU reconfiguration tables.
2) OIU PDI Mode descriptions for special modes:
   250 contains the OIU Health and Status plus the Data Dump.
   251 contains the OIU Health and Status plus the Bit Summary Table (BST) Dump.
   254 contains the OIU Health and Status plus the OIU Error Log Dump.
   255 contains the OIU Health and Status only.
3) For the SSOR format, the data from subaddress 19 (32 words) and subaddress 20 (7 words), and the frame count from subaddress 18, will be stored in the listed order in the PDI frame generated by the OIU.
4) The actual numerical values for these OIU PDI Modes, as well as the number of Modes that may be required, will be determined during the flight data reconfiguration process as the device formats themselves become better defined both in number and content.

* Indicates the OIU power-on default OIU PDI Mode.

Table S.9.0.1.6-1 Mission ULF6 Devices and Bus/RT Assignments

Logical Device	Physical Device	OIU Bus	RT Address
OIU	OIU-1	1	8
OIU	OIU-1	2	8
OIU	OIU-1	3	8
OIU	OIU-1	4	8
OIU	OIU-2	1	8
OIU	OIU-2	2	8
OIU	OIU-2	3	8
OIU	OIU-2	4	8
SSOR	SSOR1	1	23
AMS*	AMS-1	2	4
AMS	AMS-2	2	28
GNC*	GNC-1	3	30
GNC	GNC-1	4	30
GNC	GNC-2	3	29
GNC	GNC-2	4**	29
MDMX	GNC-1	3	30
MDMX	GNC-1	4	30
MDMX	GNC-2	3	29
MDMX*	GNC-2	4	29

* Indicates the OIU power-on default for the logical device

** Indicates power-on default bus for GNC-2

Table S.9.0.1.7-1 Subaddress Assignments - OIU as BC

SA	Receive (T/R = 0)	Transmit (T/R = 1)
00	Mode Code	Mode Code
01	Not Assigned	AMS-02 Telemetry (1)
02	Not Assigned	AMS-02 Telemetry (2)
03	Not Assigned	Not Assigned
04	Not Assigned	Not Assigned
05	Not Assigned	Not Assigned
06	Not Assigned	Not Assigned
07	Not Assigned	Not Assigned
08	Not Assigned	Not Assigned
09	Not Assigned	Not Assigned
10	Not Assigned	Not Assigned
11	Not Assigned	Not Assigned
12	Not Assigned	Not Assigned
13	Not Assigned	Not Assigned
14	Not Assigned	Data Dump (1)
15	Data Load Command (1)	Data Dump (2)
16	Data Load Command (2)	Data Dump (3)
17	Not Assigned	Not Assigned
18	Not Assigned	SSOR Frame Count
19	Not Assigned	SSOR Telemetry (32 words)
20	Not Assigned	SSOR Telemetry (7 words)
21	Not Assigned	Not Assigned
22	Not Assigned	Not Assigned
23	Not Assigned	Not Assigned
24	Not Assigned	Not Assigned
25	SSOR Cmd, Encryp Key (1)	Not Assigned
26	SSOR Cmd, Encryp Key (2)	Not Assigned
27	Standard Command (1)	Not Assigned
28	Standard Command (2)	Bit Summary Table (1)
29	Time of Day	Bit Summary Table (2)
30	Reserved	Reserved
31	Broadcast Mode Code	Mode Code

Table S.9.0.1.7-2 Subaddress Assignments - OIU as RT

SA	Receive (T/R = 0)	Transmit (T/R = 1)
00	Mode Code	Mode Code
01	Not Assigned	Not Assigned
02	Not Assigned	Not Assigned
03	Not Assigned	Not Assigned
04	Not Assigned	Not Assigned
05	Not Assigned	Not Assigned
06	Not Assigned	Not Assigned
07	Not Assigned	Not Assigned
08	Not Assigned	Not Assigned
09	Not Assigned	Not Assigned
10	Telemetry Data (1)	Not Assigned
11	Telemetry Data (2)	Not Assigned
12	Telemetry Data (3)	Not Assigned
13	Not Assigned	Not Assigned
14	Not Assigned	Not Assigned
15	Not Assigned	Not Assigned
16	Not Assigned	Not Assigned
17	Not Assigned	Not Assigned
18	Not Assigned	Not Assigned
19	Not Assigned	Not Assigned
20	Not Assigned	Not Assigned
21	Not Assigned	Not Assigned
22	Not Assigned	Not Assigned
23	Not Assigned	Not Assigned
24	Not Assigned	Not Assigned
25	Not Assigned	Not Assigned
26	Not Assigned	Not Assigned
27	Not Assigned	Standard Command (1)
28	Not Assigned	Standard Command (2)
29	Receive Time of Day	Not Assigned
30	Reserved	Reserved
31	Broadcast Mode Code	Mode Code

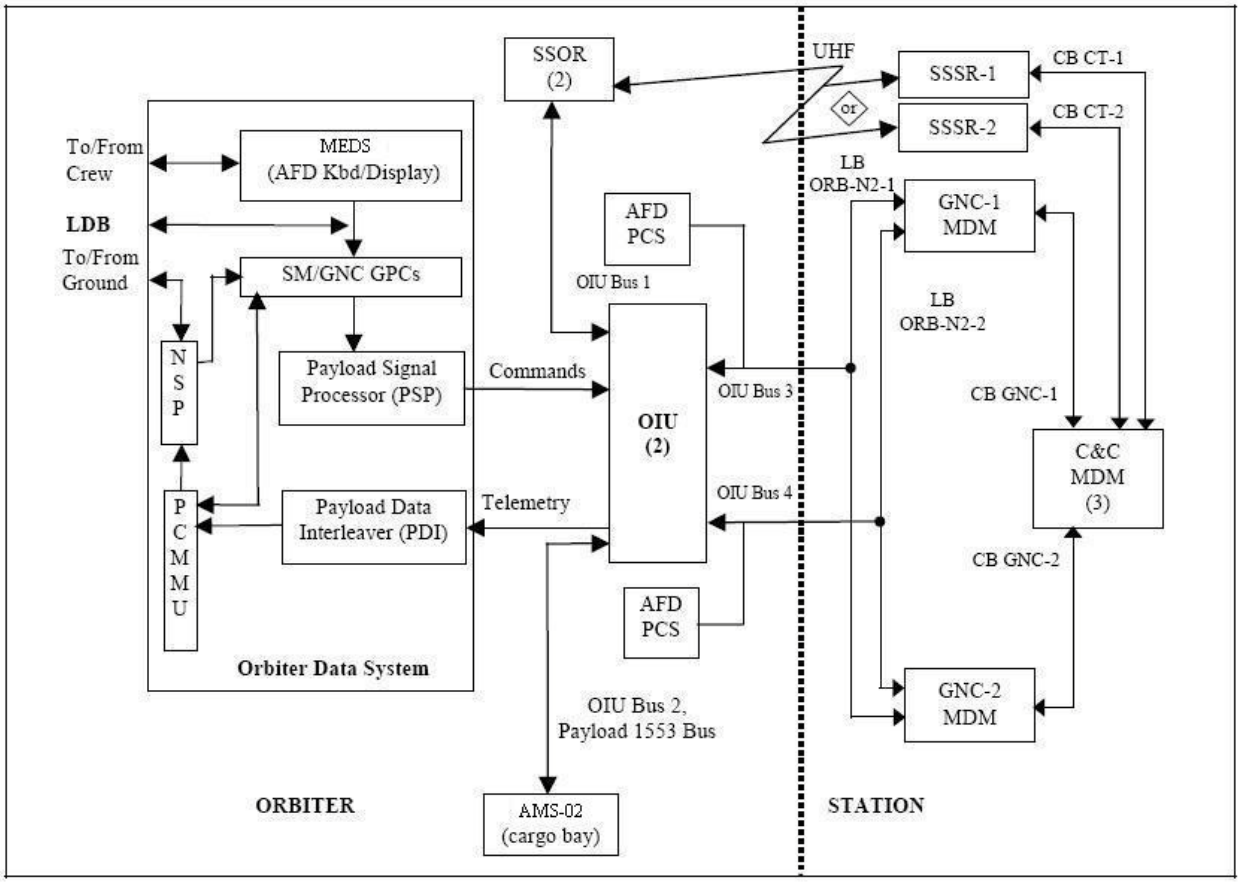

Figure S.9.0.1-1 OIU and ISS Software Interface

S.9.1 Software Overview
See Section S.9.1 of Appendix S of NSTS-21000-IDD-ISS.

S.9.2 Reserved

S.9.3 On-orbit Orbiter-Station Flight Phase Applicability
See Section S.9.3 of Appendix S of NSTS-21000-IDD-ISS.

S.9.4 Software Constraints/Communications Conventions
See Section S.9.4 of Appendix S of NSTS-21000-IDD-ISS.

S.10.0 INDUCED ENVIRONMENTS

S.10.0.1 Mission-unique Interfaces

S.10.0.1.1 Orbiter Intentional Radiated Emissions

The Orbiter produced intentional radiated emissions environment and transmission system characteristics shall be as defined in NSTS-21000-IDD-ISS, Paragraphs S.10.5.1 and 10.7.2.2, respectfully.

S.10.0.1.2 ISS Intentional Radiated Emissions

The characteristics of flight-specific ISS transmission systems shall be as defined in the ISS Vehicle Master Database (VMDB).

S.10.0.2 Orbiter ODS/Airlock Venting Environments for Extravehicular Activity (EVA) or Docking

For Orbiter ODS/Airlock venting environments for EVA or docking requirements, reference Section 10.6.5 of NSTS-21000-IDD-ISS.

S.10.0.2.1 ODS/External Airlock Depressurization Vent Pressure Environment

For ODS/External airlock depressurization vent pressure environment requirements, reference Section 10.6.5.1 of NSTS-21000-IDD-ISS.

S.10.0.2.2 Docking Base (Vestibule) Depressurization Venting Pressure Environment

For docking base (vestibule) depressurization venting pressure environment requirements, reference Section 10.6.5.3 of NSTS-21000-IDD-ISS.

S.10.0.2.3 Hatch Equalization Valve Depressurization Venting Environment

For hatch equalization valve depressurization venting environment requirements, reference Section 10.6.5.4 of NSTS-21000-IDD-ISS.

S.10.0.3 ISS On-orbit Venting

See current version of International Space Station Program (ISSP) document EID 684-12270, ISS Venting Data for ISS External Contamination Analyses, dated August 8, 2008; EDMS Number 0000388026 (EID684-12270).

S.10.0.4 Orbiter Sources of Contamination and Venting Environments

The Orbiter Sources of contamination shall be as defined in Section 10.6.2.4 of NSTS 21000-IDD-ISS. Waste water dumping constraints shall be documented in the MIP.

S.10.0.5 Other Vehicle Sources of Contamination and Venting Environments

The thruster plume particle fluence and contaminant deposition on Orbiter surfaces from Soyuz/Progress proximity operations during Dual Docked Operations (DDO) is contained in the following documents:

a. ISS Program Document, Dual Docked Operations: Predicted Thruster Plume Particle Fluence and Contaminant Deposition on Orbiter Surfaces from Soyuz/Progress Proximity Operations, EID 684-13765

b. ISS Program Document, Dual Docked Operations: Thruster Plume Particle Fluence to Orbiter Windows for Soyuz/Progress Abort Scenario, EID 684-13936

c. ISS Program Document, 25S Thruster Plume Particle Fluence and Contaminant Deposition on AMS While in the Orbiter Payload Bay During Flight ULF-6, EID684 14587

S.10.1 Interface Wiring Classifications
See Section S.10.1 of Appendix S of NSTS-21000-IDD-ISS.

S.10.2 Signal Interface
See Section S.10.2 of Appendix S of NSTS-21000-IDD-ISS.

S.10.3 Electrical Bonding
See Section S.10.3 of Appendix S of NSTS-21000-IDD-ISS.

S.10.4 Power Circuit/Signal Return Isolation and Grounding
See Section S.10.4 of Appendix S of NSTS-21000-IDD-ISS.

S.10.5 Radiated Emissions Environments
See Section S.10.5 of Appendix S of NSTS-21000-IDD-ISS.

S.10.6 Conducted Emissions Environment
See Section S.10.6 of Appendix S of NSTS-21000-IDD-ISS.

S.10.7 On-orbit Laser Emissions
See Section S.10.7 of Appendix S of NSTS-21000-IDD-ISS.

S.10.8 Reserved

S.10.9 Venting Environments and Contamination
See Section S.10.9 of Appendix S of NSTS-21000-IDD-ISS.

S.11.0 OTHER PROXIMITY OPERATIONS AND MATED OPERATIONS AND VEHICLE CONTROL SYSTEMS

Documented in Appendix S of NSTS-21000-IDD-ISS.

S.11.1 Joint Mission Operations and Vehicle Dynamics Requirements

Documented in Appendix S of NSTS-21000-IDD-ISS.

S.11.1.1 Rendezvous Terminal Phase

Documented in Appendix S of NSTS-21000-IDD-ISS.

S.11.1.1.1 Shuttle

Documented in Appendix S of NSTS-21000-IDD-ISS.

S.11.1.1.2 ISS

Documented in Appendix S of NSTS-21000-IDD-ISS.

S.11.1.2 Approach Phase

Documented in Appendix S of NSTS-21000-IDD-ISS.

S.11.1.2.1 Shuttle

Documented in Appendix S of NSTS-21000-IDD-ISS.

S.11.1.2.2 ISS

The ISS will maneuver to and maintain an orbital attitude of 0°, 0°, 0° with respect to the ISS Local Vertical, Local Horizontal (LVLH) prior to the Shuttle performing the Rendezvous Pitch Maneuver (RPM). The ISS maintains this attitude automatically by utilizing the CMG or SM and Progress thrusters. The characteristics of these thrusters are documented in SSP 50504. Table S.11.1.2.2-1 provides the parameters of the ISS MCS.

Nominally, ISS attitude control will be performed using Russian thrusters. If ISS attitude control using CMGs during Shuttle docking is used, a manual desaturation is requested once the Shuttle initiates the final approach from a distance of 30 feet. ISS will preclude jet activity resulting from CMG desaturation by setting an appropriate CMG momentum desaturation threshold which considers all external sources of induced disturbances (aerodynamics, gravity gradient, and Orbiter plumes).

Russian SM solar arrays are required to be feathered and inactive by 150 feet interface-to-interface. US PV arrays must be positioned at the angles planned for docking prior to the Shuttle approaching within a range of 600 feet Center of Gravity (CG-CG). For the US PV arrays, latched and unlatched beta gimbal torsion loads have been assessed for Shuttle approach and are both acceptable. During the unlatched and feathered proximity operation time period, the beta gimbal control system shall actively command the selected feathered angle of the solar panel.

Angular deviation (attitude accuracy) of the axes of the ISS APAS coordinate system (X_A, Y_A, Z_A) relative to the LVLH axes during the Shuttle's docking approach is determined by two types of error; quasistatic (slowly changing) and dynamic (rapidly changing). The value of quasistatic error depends on the following:

a. Time interval since the last inertial basis correction

b. Errors of the structural reference of the correcting sensors to the ISS Base coordinate system

c. Errors of the structural reference of the APAS coordinate system to the ISS Base coordinate system

d. Errors caused by thermal and pressurization deflections

The above components of quasistatic error are regarded as random independent values with mathematical expectations of zero. The total quasistatic error is calculated as the mean square sum of its components at the 3-sigma level (sigma = standard deviation) and has a normal distribution with a mathematical expectation of zero. The quasistatic error of deviation of the APAS coordinate system axes from the LVLH axes at the moment of docking (at the 3-sigma probability on each axis) when the Inertial measurement Unit (IMU) is corrected 3 hours before docking is 2.6 degrees. Dynamic attitude error is determined by the ISS MCS dynamic attitude control requirement of ±0.8 degrees with respect to the reference frame augmented by a structural dynamics contribution of ±0.2 degrees.

During Shuttle proximity operations the ISS shall not perform translational or orbit changing maneuvers or utilize any active rendezvous or docking approach mechanisms other than the ISS lights.

Table S.11.1.2.2-1 ISS RS MCS Control System Parameters Using Thrusters

Characteristic Operational Values	Nominal ISS During Shuttle Prox Ops
Maneuver Rate	N/A
Attitude Deadbands	± 0.63 º
Attitude Rate	± 0.025 º/sec
Roll Control Torque (2 Progress mid-ring thrusters)	± 2100 ft-lb
Pitch Control Torque (4 Progress mid-ring thrusters)	± 8400 ft-lb
Yaw Control Torque (4 Progress mid-ring thrusters)	± 8400 ft-lb

S.11.1.3 Docking Phase

Documented in Appendix S of NSTS-21000-IDD-ISS.

S.11.1.3.1 Shuttle
Documented in Appendix S of NSTS-21000-IDD-ISS.

S.11.1.3.2 ISS
Documented in Appendix S of NSTS-21000-IDD-ISS.

S.11.1.3.3 Shuttle/ISS Clearance Requirements
Documented in Appendix S of NSTS-21000-IDD-ISS.

S.11.1.4 Shuttle/ISS Mated Flight Phase
Documented in Appendix S of NSTS-21000-IDD-ISS.

S.11.1.4.1 Requirements for Mated Vehicle Attitude Control

S.11.1.4.1.1 Requirements Determined by the ISS System
Since solar arrays are the main power source for the ISS, postdocking attitudes (throughout the entire docked phase) shall provide sufficient power for ISS systems. The attitude deadband for the defined attitudes are documented in Table S.11.1.4.2.1-1.

The Shuttle shall have the capability to reboost the mated vehicles in the event Shuttle propellant is available.

S.11.1.4.1.2 Requirements for Pre-Undocking
The mated configuration must have the capability to maneuver to the required undocking attitude and to hold that attitude until the vehicles mode to free drift. For Orbiter and Russian vehicle undocking, attitude rate errors shall not exceed ±0.020 deg/sec/axis at the time that the vehicles mode to free drift. For Russian vehicle undocking, attitude errors shall not exceed ±3 deg/axis (relative to ISS reference) at the time that the vehicles mode to free drift.

S.11.1.4.2 Performance of Mated Stack Attitude Control

S.11.1.4.2.1 Shuttle Performance of Mated Stack Attitude Control
The Shuttle shall be able to perform attitude maneuvers and attitude holds using VRCS thrusters or ALT Low Z with X thrusters enabled and the forward Y thrusters (jet groups 2 and 3) deselected. Maneuvers shall be accomplished in less than 60 minutes. Table S.11.1.4.2.1-1 sets forth the Shuttle Digital Autopilot (DAP) parameters for use in performance of attitude maneuvers and holds.

ISS solar array suntracking or fixed angle operations are acceptable during Shuttle attitude control. This includes powered or unpowered FGB and SM articulation controllers and powered or unpowered US PV array articulation controllers and locked or unlocked beta gimbals. Unlocked beta gimbals are preferred to avoid low fault tolerance for unlocking. US PV arrays will not be positioned in their respective keep-out-zones.

S.11.1.4.2.2 ISS Performance of Mated Stack Attitude Control

The ISS shall have the capability to perform attitude control of the mated vehicles during the docked phase. It shall be able to provide LVLH and inertial attitude holds as commanded attitudes. Estimated TEAs will be commanded when appropriate to conserve propellant. Attitude control may be performed by the ISS CMGs. SM and Progress jets will provide thruster assist to the ISS CMG control and will have the capability of controlling the mated vehicles independent of CMGs. Attitude maneuvers, when necessary, will be commanded at a rate between 0.01 and 0.1 degrees/second for USOS ACS CMG/Thruster Assist (TA) control and between 0.1 and 0.2 degrees/second for RS MCS thruster only control. The time to complete the maneuver will be dependent on the magnitude of the command. The ISS control system parameters to be used during control of attitude are set forth in Tables S.11.1.4.2.2-1 and S.11.1.4.2.2-2. Since the CMG/TA ACS is a linear controller, attitude deadbands and RLs are not applicable as the controller acts upon all non-zero attitude and attitude rate errors.

S.11.1.4.2.3 Shuttle Reboost of ISS
Documented in Appendix S of NSTS-21000-IDD-ISS.

S.11.1.4.2.3.1 Shuttle
Table S.11.1.4.2.3.1-1 sets forth the Shuttle DAP parameters for use during the automated reboost. Table S.11.1.4.2.3.1-2 shows the various reboost design options certified for this flight.

S.11.1.4.2.3.2 ISS
Documented in Appendix S of NSTS-21000-IDD-ISS.

S.11.1.4.2.4 ISS Performance of Mated Stack Reboost
Documented in Appendix S of NSTS-21000-IDD-ISS.

S.11.1.4.3 Constraints for Mated Stack Attitude Control

S.11.1.4.3.1 Shuttle Constraints
Documented in Appendix S of NSTS-21000-IDD-ISS.

S.11.1.4.3.2 ISS Constraints
Documented in Appendix S of NSTS-21000-IDD-ISS.

S.11.1.4.3.3 ISS/Shuttle Attitude Control Transition Constraints
Documented in Appendix S of NSTS-21000-IDD-ISS.

Table S.11.1.4.2.1-1 Shuttle Attitude Control DAP Parameters [1] [2]

DAP Parameter	ALT PRCS (870 lbf)[3]		VRCS (24 lbf)		
	Maneuver	Hold	Maneuver	Hold	DDC[5]
Maneuver Rate	<= 0.05 deg/sec	0.01 deg/sec	<= 0.10 deg/sec	0.01 deg/sec	0.01 deg/sec
Attitude Deadband	5 deg	1 deg	3 deg	1 deg	0.1 deg
Attitude Rate Limit	0.02 deg/sec	0.02 deg/sec	0.02 deg/sec	0.02 deg/sec	0.02 deg/sec
ALT PRCS On Time[4]	0.08 sec	0.08 sec	N/A	N/A	N/A
ALT PRCS Delay Time	5.0 sec	5.0 sec	N/A	N/A	N/A
ALT PRCS # Jets	1	1	N/A	N/A	N/A
ALT PRCS Jet Option	Low Z with +/- X, No fwd Y	Low Z with +/- X, No fwd Y	N/A	N/A	N/A
Jet Selection	Minimum Angle	Minimum Angle	Minimum Angle	Minimum Angle	Minimum Angle

Notes:
1) Maneuver/track hysteresis parameter KH = 4.
2) Orbiter control not permitted if ODS is depressurized.
3) No loaded RMS operations are permitted in ALT PRCS mode.
4) PRCS ALT On Times must be specified in multiples of 0.08 seconds.
5) For Direct Deadband Collapse (DDC)
   - VRCS Only
   - No reboost during DDC
   - DDC not allowed with any loaded robotics arm (SRMS, SSRMS, JEMRMS)

Table S.11.1.4.2.2-1 ISS RS MCS Parameters Using Thrusters

Characteristic Operational Values	Nominal ISS+Shuttle (empty)
Maneuver Rate	± (0.1 - 0.2) deg/sec
Attitude Deadbands	± 0.63º
Attitude Rate	± 0.025 º/sec
Roll Control Torque 2 Progress mid-ring thrusters	See Table S.4.2.3.2.4.1-1
Pitch Control Torque (4 Progress mid-ring thrusters)	See Table S.4.2.3.2.4.1-1
Yaw Control Torque (4 Progress mid-ring thrusters)	See Table S.4.2.3.2.4.1-1

Table S.11.1.4.2.2-2 ISS USOS ACS Parameters with RS Thruster Assist

Characteristic Operational Values	Nominal ISS+Shuttle (empty)
Maneuver Rate	± (0.01 – 0.1) deg/sec
Attitude Deadbands	N/A
Attitude Rate	N/A
Roll Control Torque 2 Progress mid-ring thrusters	See Table S.4.2.3.2.4.1-1
Pitch Control Torque (4 Progress mid-ring thrusters)	See Table S.4.2.3.2.4.1-1
Yaw Control Torque (4 Progress mid-ring thrusters)	See Table S.4.2.3.2.4.1-1
Commanded CMG Torque Limit	200 ft-lb
CMG Feedforward Torque (occurs during CMG desaturation & thruster assist)	200 ft-lb
CMG Feedforward Torque Application Time	18 sec (desat)
Minimum time between CMG desaturation and Thruster Assist requests	18 sec

Table S.11.1.4.2.3.1-1 Shuttle Automated Reboost DAP Parameters

DAP Parameter	ALT PRCS [(1)(2)] 870 lbf	VRCS [(2)] 24 lbf
Maneuver Rate	0.05 deg/sec	0.10 deg/sec
Attitude Deadband	10 deg	5 deg
Attitude Rate Limit	0.02 deg/sec	0.05 deg/sec
ALT PRCS On Time [(3)]	0.08 sec	N/A
ALT PRCS Delay Time	5.0 sec	N/A
ALT PRCS # Jets	1	N/A
ALT PRCS Jet Option	Tail	N/A
Low Z	On [(4)]	N/A
X Jets	Off	N/A

Notes:
1) Two -Z PRCS reboost options are available: configurations 1 and 4 in Table S.11.1.4.2.3.1-2. Option 2 is NOT CERTIFIED for mated operations.
2) Reboost is not allowed with any loaded robotics arm (SRMS, SSRMS, or JEMRMS).
3) PRCS ALT On Times must be specified in multiples of 0.08 seconds.
4) FxL and FxR jets must be deselected.

Table S.11.1.4.2.3.1-2 Shuttle Automated Reboost Design Options

Option	Pri	Translation Jets								Rbst Intvl (sec)	Rot Type	Trans Delay (sec)
		Type	Translation Burn Time (sec)/ Start Delay Time (sec)									
			F2D	F1D	LXD	RXD	F5R,F5L	R5D	L5D			
1	2	-Z	0.08/0.0	0.08/6.0	0.08/12.0	0.08/18.0				24.00[(1)]	ALT PRCS	12.0
2	-	+X[(2)]	-	-	-	-	-	-	-	-	-	-
3	1	-Z					2.0[(3)]	2.0[(3)]	2.0[(3)]	2.0[(3)]	VRCS	
4	3	-Z	0.08/0.0	0.08/6.0						12.0[(4)]	ALT PRCS	12.0

Notes:
1) For configuration 1, each of the four –Z jets is fired in sequence, separated by 6 seconds. The pattern is repeated every 24 seconds until the attitude or rate deadband is exceeded.
2) For unmanned Orbiter separation and Disposal Procedure. Configuration 2 is not certified for mated reboost.
3) For configuration 3, the Reboost Interval is set to the Burn Time, resulting in a steady state VRCS firing until the attitude or rate deadband is exceeded.
4) For configuration 4, the two forward –Z jets are fired in sequence, separated by 6 seconds. The pattern is repeated every 12 seconds until the attitude or rate deadband is exceeded.

S.11.1.4.4 Shuttle Control System Overview

S.11.1.4.4.1 Shuttle Orbital Flight Control System Description
Documented in Appendix S of NSTS-21000-IDD-ISS.

S.11.1.4.4.1.1 Standard PRCS
Documented in Appendix S of NSTS-21000-IDD-ISS.

S.11.1.4.4.1.2 ALT PRCS
Documented in Appendix S of NSTS-21000-IDD-ISS.

S.11.1.4.4.1.3 VRCS
Documented in Appendix S of NSTS-21000-IDD-ISS.

S.11.1.4.5 ISS MCS Overview

S.11.1.4.5.1 ISS RS MCS General Description
Documented in Appendix S of NSTS-21000-IDD-ISS.

S.11.1.4.5.2 ISS USOS ACS General Description
Documented in Appendix S of NSTS-21000-IDD-ISS.

S.11.1.5 Undocking and Separation Phase
Documented in Appendix S of NSTS-21000-IDD-ISS.

S.11.1.5.1 Shuttle
Documented in Appendix S of NSTS-21000-IDD-ISS.

S.11.1.5.2 ISS
The ISS docking mechanism shall be configured at the start of unlatching as defined in Figure S.3.1.4.2-1 of NSTS-21000-IDD-ISS, Appendix S. A timer to initiate moding of the ISS attitude control system from free drift to attitude hold will be triggered automatically at physical separation. The ISS crew and/or ground will serve as a backup in the event of a failure of automatic moding. The timer shall be set such that the backup means of ISS attitude control moding will occur no later than 120 seconds after physical separation. Upon activation of the ISS attitude control system, the ISS will 'snap & hold' its attitude until the Shuttle has separated to a distance of at least 600 feet CG-CG. Then the ISS may maneuver to any attitude at a maneuver rate no greater than 0.2 dps and remain in this attitude until the end of the joint flight phase.

ISS solar arrays will be configured prior to undocking to be at planned positions outside of their keep-out-zones. The solar arrays will be positioned within the beta angular uncertainties listed in Table S.4.2.1.2.2-1 of the Appendix S of NSTS-21000-IDD-ISS. The SM solar array drives must be deactivated. For the US PV arrays, the beta gimbals must be locked if analysis shows that loads due to Shuttle separation can shutdown the BGA motors. The Russian solar arrays may begin sun tracking 10 minutes after undocking has occurred. The US PV arrays may begin sun tracking at a range of 600 feet CG-CG.

The ISS shall not perform translational or orbit changing maneuvers during Shuttle separation and flyaround operations.

S.11.1.5.3 Shuttle/ISS Clearance Requirements
Documented in Appendix S of NSTS-21000-IDD-ISS.

S.11.2 Plume Environments

S.11.2.1 Orbiter Plume Characteristics
Documented in Appendix S of NSTS-21000-IDD-ISS.

S.11.2.1.1 Plume Dynamic Pressure Calculation
Documented in Appendix S of NSTS-21000-IDD-ISS.

S.11.2.1.1.1 Calculation of Source Flow Equation Constants
Documented in Appendix S of NSTS-21000-IDD-ISS.

S.11.2.1.1.2 Dual Jet Model
Documented in Appendix S of NSTS-21000-IDD-ISS.

S.11.2.1.2 Force Coefficient Calculations
Documented in Appendix S of NSTS-21000-IDD-ISS.

S.11.2.1.2.1 Methodology
Documented in Appendix S of NSTS-21000-IDD-ISS.

S.11.2.1.2.1.1 Approach
Documented in Appendix S of NSTS-21000-IDD-ISS.

S.11.2.1.2.1.2 Accommodation Coefficients
Documented in Appendix S of NSTS-21000-IDD-ISS.

S.11.2.1.2.1.3 Guidelines
Documented in Appendix S of NSTS-21000-IDD-ISS.

S.11.2.1.3 RCS Plume Induced Thermal Loads

S.11.2.1.3.1 RCS Plume Induced Thermal Effects Analysis

S.11.2.1.3.1.1 Stagnation/High Angle Of Attack Shapes
Documented in Appendix S of NSTS-21000-IDD-ISS.

S.11.2.1.3.1.1.1 Flat Plate At Low Angle Of Attack
Documented in Appendix S of NSTS-21000-IDD-ISS.

S.11.2.1.4 RCS Plume Induced Contamination

S.11.2.1.4.1 Plume Radiation
Documented in Appendix S of NSTS-21000-IDD-ISS.

S.11.2.1.4.2 Plume Flux
Documented in Appendix S of NSTS-21000-IDD-ISS.

S.11.2.1.4.3 Surface Erosion Resulting from Shuttle Plume Impingement
Documented in Appendix S of NSTS-21000-IDD-ISS.

S.11.2.1.4.4 Real-Time RCS Oxidizer Leak Rate Predictions
Documented in Appendix S of NSTS-21000-IDD-ISS.

S.11.2.2 Station Plume Characteristics

S.11.2.2.1 Station RCS Engines
Documented in Appendix S of NSTS-21000-IDD-ISS.

S.11.2.2.2 Plume Pressure Environment
Documented in Appendix S of NSTS-21000-IDD-ISS.

S.12.0 RESERVED

S.13.0 ELECTRICAL WIRING INTERFACES

S.13.0.1 Mission-unique Interfaces

Applicability of APCU or SSPTS implementation is specified in the mission-specific FRD.

S.13.1 General

See Section S.13.1 of Appendix S of NSTS-21000-IDD-ISS.

S.13.2 ISS Connector/Interfaces at On-orbit Operation

See Section S.13.2 of Appendix S of NSTS-21000-IDD-ISS.

S.13.3 ISS Safety Critical Circuit to Hazard Event Correlation

See Section S.13.3 of Appendix S of NSTS-21000-IDD-ISS.

S.14.0 JOINT SHUTTLE/SPACE STATION PAYLOAD DEPLOYMENT AND RETRIEVAL SYSTEM INTERFACES

Documented in Appendix S of NSTS-21000-IDD-ISS.

S.14.1 Shuttle Remote Manipulator System (SRMS)/SSRMS Payload Bay Requirements

S.14.1.1 Reserved

S.14.1.2 Maximum SRMS/SSRMS Deployable Payload Stowed-in-the-Bay Envelope

Documented in Appendix S of NSTS-21000-IDD-ISS.

S.14.1.3 Clearance for SRMS/SSRMS Payload Maneuvers

Documented in Appendix S of NSTS-21000-IDD-ISS.

S.14.1.3.1 Clearance Requirements for Payloads While the Trunnions are in the Latch Guides

Documented in Appendix S of NSTS-21000-IDD-ISS.

S.14.1.3.2 Clearance Requirements for Payloads Prior to Clearing the Latch Guides

Documented in Appendix S of NSTS-21000-IDD-ISS.

S.14.1.4 Clearance Requirements for Payloads Out of the Cargo Bay

Documented in Appendix S of NSTS-21000-IDD-ISS.

S.14.1.5 SRMS/SSRMS Auto Trajectory Clearance Requirements

Documented in Appendix S of NSTS-21000-IDD-ISS.

S.14.2 Payload Handling Operations

S.14.2.1 SRMS/SSRMS Operations

Documented in Appendix S of NSTS-21000-IDD-ISS.

S.14.3 Operational Hardware Constraints

S.14.3.1 Grapple Fixture to CE Operating Load Limits

Documented in Appendix S of NSTS-21000-IDD-ISS.

S.14.3.2 SRMS Vibration Frequency

Documented in Appendix S of NSTS-21000-IDD-ISS.

S.14.3.3 Flight Releasable Grapple Fixture (FRGF) Temperatures

Documented in Appendix S of NSTS-21000-IDD-ISS.

S.14.3.4 SRMS/SSRMS End Effector Temperature

Documented in Appendix S of NSTS-21000-IDD-ISS.

S.14.3.5 SSRMS Vibration Frequency

Documented in Appendix S of NSTS-21000-IDD-ISS.

S.14.3.6 Power Data Grapple Fixture (PDGF) Temperatures
Documented in Appendix S of NSTS-21000-IDD-ISS.

S.14.4 Berthing/Unberthing Operations Requirements and Constraints
Documented in Appendix S of NSTS-21000-IDD-ISS.

S.14.5 Shuttle and Station Vehicle Operations Constraints During Robotic Operations
Documented in Appendix S of NSTS-21000-IDD-ISS.

S.14.5.1 Shuttle Digital Auto Pilot (DAP) with SRMS Operations
Documented in Appendix S of NSTS-21000-IDD-ISS.

S.14.5.1.1 Shuttle DAP Operations with SRMS/Payload in Position Hold Mode or Brakes on Mode
Documented in Appendix S of NSTS-21000-IDD-ISS.

S.14.5.1.2 Shuttle DAP Operations with SRMS/Payload in Motion
Documented in Appendix S of NSTS-21000-IDD-ISS.

S.14.5.2 Station Control Moment Gyro (CMG) Thruster Assist (TA) with SRMS Operations
Documented in Appendix S of NSTS-21000-IDD-ISS.

S.14.5.3 Station Thrusters Only with SRMS Operations
Documented in Appendix S of NSTS-21000-IDD-ISS.

S.14.5.4 Shuttle DAP and SSRMS Operations
Documented in Appendix S of NSTS-21000-IDD-ISS.

S.14.5.4.1 Shuttle DAP Operations with SSRMS/Payload in Position Hold Mode or Brakes on Mode
Documented in Appendix S of NSTS-21000-IDD-ISS.

S.14.5.4.2 Shuttle DAP Operations with SSRMS/Payload in Motion
Documented in Appendix S of NSTS-21000-IDD-ISS.

S.14.5.5 Station CMG TA and SSRMS/Payload in Motion
Documented in Appendix S of NSTS-21000-IDD-ISS.

S.14.5.6 Station Thruster Only and SSRMS Operations
Documented in Appendix S of NSTS-21000-IDD-ISS.

S.14.5.7 Shuttle DAP and ORU Translation Device (OTD) Operations
Documented in Appendix S of NSTS-21000-IDD-ISS.

S.14.5.7.1 Shuttle DAP Operations for Unloaded OTD
Documented in Appendix S of NSTS-21000-IDD-ISS.

S.14.5.7.2 Shuttle DAP Operations with OTD/Payload with Clutches Engaged
Documented in Appendix S of NSTS-21000-IDD-ISS.

S.14.5.7.3 Shuttle DAP Operations with OTD/Payload in Motion
Documented in Appendix S of NSTS-21000-IDD-ISS.

S.14.5.8 Station CMG TA and OTD Operations
Documented in Appendix S of NSTS-21000-IDD-ISS.

S.14.5.8.1 Station CMG TA Operations for Unloaded OTD
Documented in Appendix S of NSTS-21000-IDD-ISS.

S.14.5.8.2 Station CMG TA Operations with OTD/Payload with Clutches Engaged
Documented in Appendix S of NSTS-21000-IDD-ISS.

S.14.5.8.3 Station CMG TA Operations with OTD/Payload in Motion
Documented in Appendix S of NSTS-21000-IDD-ISS.

S.14.5.9 Station Thrusters Only and OTD Operations
Documented in Appendix S of NSTS-21000-IDD-ISS.

S.14.5.9.1 Station Thrusters Only Operations for Unloaded OTD
Documented in Appendix S of NSTS-21000-IDD-ISS.

S.14.5.9.2 Station Thrusters Only Operations with OTD/Payload with Clutches Engaged
Documented in Appendix S of NSTS-21000-IDD-ISS.

S.14.5.9.3 Station Thrusters Only Operations with OTD/Payload in Motion
Documented in Appendix S of NSTS-21000-IDD-ISS.

S.14.5.10 Shuttle DAP and Strela Operations
Documented in Appendix S of NSTS-21000-IDD-ISS.

S.14.5.10.1 Shuttle DAP Operations for Unloaded Strela/Payload
Documented in Appendix S of NSTS-21000-IDD-ISS.

S.14.5.10.2 Shuttle DAP Operations with Strela/Payload with Clutches Engaged
Documented in Appendix S of NSTS-21000-IDD-ISS.

S.14.5.10.3 Shuttle DAP Operations with Strela/Payload in Motion
Documented in Appendix S of NSTS-21000-IDD-ISS.

S.14.5.11 Station CMG TA and Strela Operations
Documented in Appendix S of NSTS-21000-IDD-ISS.

S.14.5.11.1 Station CMG TA Operations for Unloaded Strela/Payload
Documented in Appendix S of NSTS-21000-IDD-ISS.

S.14.5.11.2 Station CMG TA Operations with Strela/Payload with Clutches Engaged
Documented in Appendix S of NSTS-21000-IDD-ISS.

S.14.5.11.3 Station CMG TA Operations with Strela/Payload in Motion
Documented in Appendix S of NSTS-21000-IDD-ISS.

S.14.5.12 Station Thrusters Only and Strela Operations
Documented in Appendix S of NSTS-21000-IDD-ISS.

S.14.5.12.1 Station Thrusters Only Operations for Unloaded Strela/Payload
Documented in Appendix S of NSTS-21000-IDD-ISS.

S.14.5.12.2 Station Thrusters Only Operations with Strela/Payload with Clutches Engaged
Documented in Appendix S of NSTS-21000-IDD-ISS.

S.14.5.12.3 Station Thrusters Only Operations with Strela/Payload in Motion
Documented in Appendix S of NSTS-21000-IDD-ISS.

S.14.6 Externally Induced Loads
Documented in Appendix S of NSTS-21000-IDD-ISS.

S.20.0 WAIVERS, DEVIATIONS AND EXCEEDANCES

S.20.1 SRMS/SSRMS Auto Trajectory Clearance
(Reference Paragraph S.14.1.5)

REQUIREMENT: SRMS auto trajectories shall maintain a minimum of 5 feet clearance between the deployed payload and any part of the Orbiter (including other payloads in the bay) or the Space Station at all times. Clearance between the protective manipulator boom envelope and any part of the Orbiter (including other CEs in the bay) shall be maintained in accordance with Figure S.14.1.5-1 for SRMS.

EXCEEDANCE:

1. Laser Dynamic Range Imager/Intensified Television Camera (LDRI/ITVC) SOZ to Stbd Plbd = 55.5”
2. Orbiter Boom Sensor System (OBSS) Boom to Stbd Reinforced Carbon-Carbon (RCC) = 42.1”
3. LDRI/ITVC SOZ = 54.6”
4. OBSS Worksite Interface Fixture (WIF) to Nose Cap RCC = 41.6”
5. LDRI/ITVC SOZ to Port RCC = 55.6”
6. OBSS Boom Handrail to Port Payload Bay Door (PLBD) = 42.9”

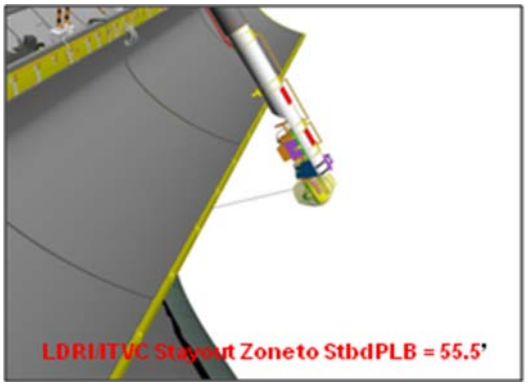

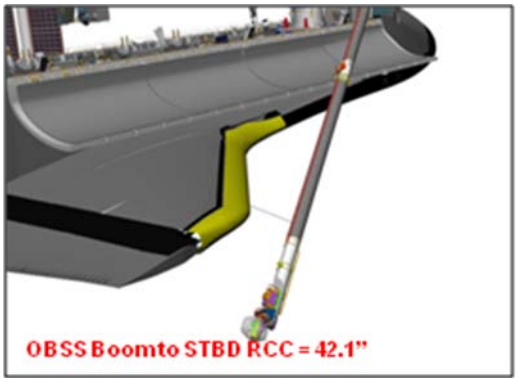

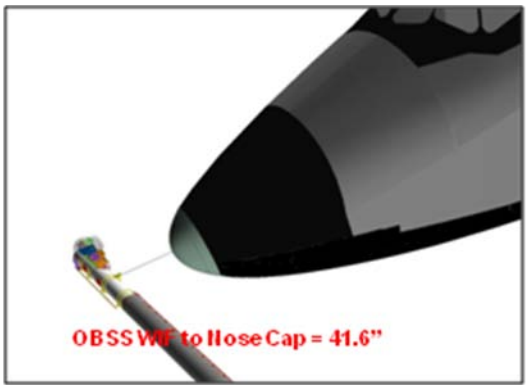

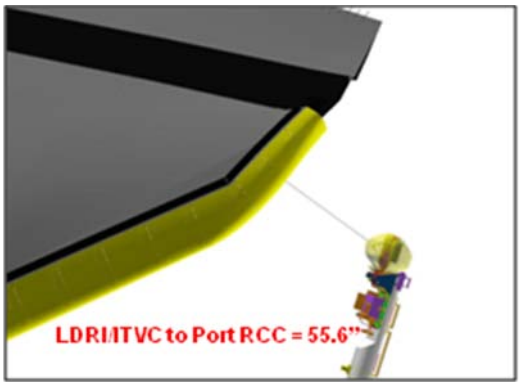

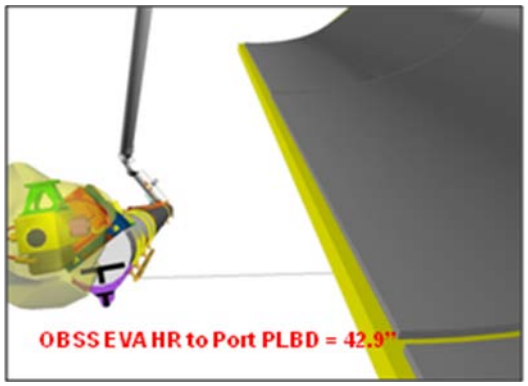

RATIONALE: Analyses performed by DX24 (Reference: D014B210-10-014, STS-134 DLI Clearance Analysis) documents these clearance violations. Contact risks are mitigated through crew training and awareness, visual cues, and the set-up of adequate camera views to monitor robotic operations. While crew procedure OBSS docked LDRI RCC survey calls for specific cameras to be positioned to monitor Remote Manipulator System (RMS) clearances, the RMS side-view camera is specifically used to monitor OBSS to Orbiter clearances.

APPENDIX A

ABBREVIATIONS AND ACRONYMS

Appendix A
Abbreviations and Acronyms

ACS	Attitude Control System
AFD	Aft Flight Deck
ALT	Alternate
AMS	Alpha Magnetic Spectrometer
AMS-02	Alpha Magnetic Spectrometer-02
APAS	Androgynous Peripheral Assembly System
APCU	Assembly Power Conversion Unit
APFR	Articulating Portable Foot Restraint
ATV	Automated Transfer Vehicle
BC	Bus Controller
BGA	Beta Gimbal Assembly
BST	Bit Summary Table
C&C	Command and Control
CB	Control Bus
CBM	Common Berthing Mechanism
CCTV	Closed Circuit Television
CE	Cargo Element
CEVIS	Cycle Ergometer Vibration Isolation and Stabilization
CMG	Control Moment Gyro
CT	Communication and Tracking
DAP	Digital Auto Pilot
DC	Direct Current
DDO	Dual Docked Operations
DLA	Drive/Locking Assembly
ECLS	Environmental Control and Life Support
EDF	Expanding Diamter Fastener
EF	Exposed Facility
EFU	Exposed Facility Unit
ELC3	ExPress Logistics Carrier3
ELM	Experiment Logistics Module
ESP	External Stowage Platform
ETVCG	External Television Camera Group
EVA	Extravehicular Activity
FGB	Functional Cargo Block
FPMU	Floating Potential Measurement Unit
FRD	Flight Requirements Document
FRGF	Flight Releasable Grapple Fixture
GFE	Government Furnished Equipment
GNC	Guidance, Navigation, and Control

GPC	General Purpose Computer
Hz	Hertz
ICC-VLD	Integrated Cargo Carrier-Vertical Light Deployable
ICD	Interface Control Document
ICS-EF	Interorbit Communications System – Exposed Facility
IEA	Integrated Electronic Assembly
ISS	International Space Station
ISSP	International Space Station Program
ITS	Integrated Truss Segment
IVA	Intravehicular Activity
ITVC	Intensified Television Camera
JEM	Japanese Experiment Module
KAU	Keep Alive Umbilical
Kbd	Keyboard
LB	Local Bus
LDB	Launch Data Bus
LDRI	Laser Dynamic Range Imager
MBS	Mobile Remote Servicer Base System
MCC-H	Mission Control Center - Houston
MCDS	Multifunction Cathode Ray Tube Display System
MCS	Motion Control System
MDM	Multiplexer/Demultiplexer
MDMX	Multiplexer/Demultiplexer “X”
MEDS	Multifunctional Electronic Display Subsystem
MIP	Mission Integration Plan
MPLM	Multi-Purpose Logistics Module
MRM2	Mini Research Module 2
ms	millisecond
N/A	Not Applicable
N_2	Nitrogen
NSP	Network Signal Processor
O_2	Oxygen
OBSS	Orbiter Boom Sensor System
ODS	Orbiter Docking System
OIU	Orbiter Interface Unit
OMS	Orbiter Maneuvering System
OOP	Out-of-Plane
ORU	Orbital Replacement Unit
OTD	ORU Translation Device
PCMMU	Pulse Code Modulation Master Unit
PCS	Power Conversion System

PDGF	Power Data Grapple Fixture
PDI	Payload Data Interleaver
PFR	Portable Foot Restraint
PIU	Power Interface Unit
PLBD	Payload Bay Door
PM	Pulse Modulated
PMA	Pressurized Mating Adapter
PMM	Permanent Multipurpose Module
POA	Payload ORU Accommodation
PRCS	Primary Reaction Control System
PS	Pressurized Section
PSP	Payload Signal Processor
PTC	Passive Thermal Control
PV	Photovoltiac
R&D	Rendezvous and Docking
RCC	Reinforced Carbon-Carbon
RCS	Reaction Control System
RF	Radio Frequency
RMS	Remote Manipulator System
RSS	Rotating Service Structure
RT	Remote Terminal
SARJ	Solar Alpha Rotary Joint
SEDA	Space Environment Data Acquisition
SM	Service Module
SPDM	Special Purpose Dexterous Manipulator
SRMS	Shuttle Remote Manipulator System
SSACS	Space Station Analysis Coordinate System
SSCS	Space-to-Space Communication System
SSOR	Space-to-Space Orbiter Radio
SSPTS	Station-to-Shuttle Power Transfer System
SSRMS	Space Station Remote Manipulator System
SSSR	Space-to-Space Station Radio
SVS	Space Vision System
TA	Thruster Assist
TCS	Thermal Control System
UHF	Ultra High Frequency
ULF6	Utilization and Logistics Flight6
US LAB	United States Laboratory
UTAS	Universal Trunnion Attachment System
VMDB	Vehicle Master Database
VRCS	Vernier Reaction Control System
WETA	Wireless Video System External Transceiver Assembly

WIF	Worksite Interface Fixture
YPR	Yaw Pitch Roll