PAYLOAD FLIGHT HAZARD REPORT			a. NO: AMS-02-F16
b. PAYLOAD	Alpha Magnetic Spectrometer-02 (AMS-02)		c. PHASE: II
d. SUBSYSTEM:	Optics, Materials	e. HAZARD GROUP: Impact/Collision, contamination, Injury/Illness	f. DATE: March 31, 2006
g. HAZARD TITLE:	Shatterable Material Release		i. HAZARD CATEGORY: CATASTROPHIC **X** CRITICAL
h. APPLICABLE SAFETY REQUIREMENTS:	NSTS 1700.7, NSTS 1700.7B ISS Addendum, 200.3, 206, 209, 215		
j. DESCRIPTION OF HAZARD:	The breakage of glass or other frangible material can results in contamination/damage of space suits (EMU, Orlan) or the generation of debris of sufficient size to cause a released mass hazard.		
k. CAUSES *(list)*	1. Release of shatterable materials		

o. APPROVAL	PAYLOAD ORGANIZATION	SSP/ISS
PHASE I		
PHASE II		
PHASE III		

PAYLOAD FLIGHT HAZARD REPORT	a. NO: AMS-02-F16
b. PAYLOAD Alpha Magnetic Spectrometer-02 (AMS-02)	c. PHASE: II

l. HAZARD CONTROL (CONTROL), m. SAFETY VERIFICATION METHODS (SVM), n. STATUS OF VERIFICATIONS (STATUS)	OPS CONTROL
1. CAUSE: Shatterable Material Release	
1.1 CONTROL: The TOF and ACC Photomultiplier Tubes (PMT) are vacuum tubes, and have a reduced interior pressure. All photomultiplier tubes are sealed within PMT housings with potting used to protect the high voltage circuitry also preventing any potential broken glass from the rear of the assembly. The glass body of the PMT is covered with conductive paint and a protective coating that will protect and contain the glass in the event of a breakage. The glass front of the PMTs are covered with a polymer optical coupling/pad that will contain any fragments and preclude migration of glass. Beyond the optical coupling/pad is the PMT support and the light guides that are sealed to the TOF PMT housing and within the housing for the ACC light guides. Additionally, the ACC PMT are sealed within a cover that is vented through a filter. 1.1.1 SVM: Review of Design. 1.1.2 SVM: Inspection of as built hardware. 1.1.3 SVM: Qualification of TOF & ACC PMT designs (vibration testing). 1.1.1 STATUS: Open 1.1.2 STATUS: Open 1.1.3 STATUS: Open	
1.2 CONTROL: The RICH and ECAL Photomultiplier Tubes (PMT) are vacuum tubes, and have a reduced interior pressure. All photomultiplier tubes are sealed within PMT housings with potting used to protect the high voltage circuitry and preventing any potential release from the rear of the assemblies. The glass body of the PMT are covered with conductive paint and a protective coating that will protect and contain the glass in the event of a breakage. The glass front of the PMTs are covered with a polymer optical coupling/pad that will contain any fragments. The ECAL front face is additionally optically sealed to the ECAL lead optical fiber sandwiches to preclude any release path. The RICH polymer optical coating is compressed by the light guides held in place with nylon wires. 1.2.1 SVM: Review of Design. 1.2.2 SVM: Inspection of as built hardware. 1.2.3 SVM: Qualification of PMT designs (vibration testing). 1.2.1 STATUS: Open	

PAYLOAD FLIGHT HAZARD REPORT	a. NO: AMS-02-F16
b. PAYLOAD Alpha Magnetic Spectrometer-02 (AMS-02)	c. PHASE: II

1.2.2 STATUS: Open
1.2.3 STATUS: Open

1.3 CONTROL: All fiber optics cables (glass and polymer) are constructed to retain fibers within the cables and connectors by bonding the fibers or by sealing the end of the cables. Use of fiber optic cables are withing the TAS and avionics integration hardware.

1.3.1 SVM: Review of Design.
1.3.2 SVM: Inspection of as built hardware.
1.3.1 STATUS: Open
1.3.2 STATUS: Open

1.4 CONTROL: The ACC fiber optic connectors must distribute the fibers (non-glass, non-frangible) to specific connector locations from the ACC panel cables ("Y" connector) and to the ACC PMT. The connectors utilize a free volume to route the individual fibers. This free volume is vented through filters to contain any possible broken fibers.

1.4.1 SVM: Review of Design.
1.4.2 SVM: Inspection of as built hardware.
1.4.1 STATUS: Open
1.4.2 STATUS: Open

1.5 CONTROL: Fiber optics are used within the Tracker Laser Alignment System laser source boxes that are contained within the structure of the box and the box filter precluding the release of any possible generation of glass particulates.

1.5.1 SVM: Review of Design.
1.5.2 SVM: Inspection of as built hardware.
1.5.1 STATUS: Open
1.5.2 STATUS: Open

1.6 CONTROL: The Tracker Silicon Wafers are glued to a flexible metalized film that will retain any fractured pieces. The film is Upilex which is supported (adhered to) on 5 mm Airex Foam. The foam is glued to a carbon fiber layer which is glued to the aluminum ladders that support the sensors as a whole. In addition, the light tight air vents have been fitted

PAYLOAD FLIGHT HAZARD REPORT	a. NO: AMS-02-F16
b. PAYLOAD Alpha Magnetic Spectrometer-02 (AMS-02)	c. PHASE: II

with a mesh screen to preclude the release of any particles.

1.6.1 SVM: Review of Design.

1.6.2 SVM: Inspection of as built hardware.

1.6.1 STATUS: Open

1.6.2 STATUS: Open

1.7 CONTROL: The Laser Diodes and optics are mounted within the Tracker Laser Alignment System laser source boxes and are contained within the structure of the box and the vent filters. Fiber optics within the box are not contained within jackets and are contained by structure of the enclosure and the vent filters in the event of breakage.

1.7.1 SVM: Review of Design.

1.7.2 SVM: Inspection of as built hardware.

1.7.1 STATUS: Open

1.7.2 STATUS: Open

1.8 CONTROL: The ACC imbeds a polymer (non-glass, non-frangible) fiber optics in the BICRON BC 414 scintillator panels using optical cement (BC 600) to retain the fibers in place.

1.8.1 SVM: Review of Design.

1.8.2 SVM: Inspection of as built hardware.

1.8.1 STATUS: Open

1.8.2 STATUS: Open

1.9 CONTROL: The ECAL is constructed using layers of grooved lead (lead-antimony alloy) with doped polystyrene fibers (PolHiTech 0046) strands (non-glass, non-frangible) placed in the groves. The layers of lead and the fibers are assembled together using optical cement. The fibers are retained by the tight tolerance construction and adhesive.

1.9.1 SVM: Review of Design.

1.9.2 SVM: Inspection of as built hardware.

1.9.1 STATUS: Open

1.9.2 STATUS: Open

PAYLOAD FLIGHT HAZARD REPORT	a. NO: AMS-02-F16
b. PAYLOAD Alpha Magnetic Spectrometer-02 (AMS-02)	c. PHASE: II

1.10 CONTROL: RICH aerogel and sodium fluoride blocks are adhered to the "upper" structure of the RICH, a volume which is vented through filters. The aerogel and sodium fluoride blocks are covered by a Plexiglas plane that is sealed to the block support structure. This volume is vented through filters to contain released particles.

1.10.1 SVM: Review of Design.

1.10.2 SVM: Inspection of as built hardware.

1.10.1 STATUS: Open

1.10.2 STATUS: Open

1.11 CONTROL: The construction of the Star Tracker Lenses and filters are provides vent paths around the optics to preclude pressure loading of the optical components. The lenses are secured using standard optics interfaces without glue or potting compounds. No optical component of the Star Tracker exceeds 0.25 pounds; the heaviest glass component is approximately 55 grams.

1.11.1 SVM: Star Tracker Lenses will be vibration tested to flight levels and inspected for damage.

1.11.2 SVM: Star Tracker Lenses will be pressure decay tested to confirm venting performance without damage or release.

1.11.3 SVM: Review of Design to confirm mass of optical components.

1.11.1 STATUS: Closed. Vibration Test Report, VIBRPT30_S0100R_24JAN2K6.doc, dated 26 January 2006, from Laboratorio per lo Studio degli Effetti delle Radiazioni sui Materiali per lo Spazio, confirms no damage to optics or released masses.

1.11.2 STATUS: Open. Preliminary Report AMIF/LETV/1/A, dated 19 January 2005 from Center for Advanced Research in Space Optics, documents the successful thermal vacuum testing of the lenses without damage or released masses.

1.11.3 STATUS: Closed. Communications from Paolo Trampus, Star Tracker Project, confirmed mass of optical components individually under 0.25 pounds. Email dated 31 March 2006 addressed to AMS-02 Safety Engineer Leland Hill, Titled "Safety Issue". File transmitted to AMS-02 Safety Verification Records.

Notes:

PAYLOAD FLIGHT HAZARD REPORT		a. NO:	AMS-02-F16
b. PAYLOAD	Alpha Magnetic Spectrometer-02 (AMS-02)	c. PHASE:	II

ACRONYMS	
°C – Degrees Centigrade (Celsius)	F – Fluoride
°F – Degrees Fahrenheit	Na – Sodium
ACC – Anti-Coincidence Counter	PFTE - Polytetrafluoroethylene
AMS-02 – Alphamagnetic Spectrometer - 02	PMT – Photomultiplier Tube
CFRC – Carbon Fiber Reinforced Composite	RICH – Ring Imaging Cherenkov (detector)
ECAL – Electromagnetic Calorimeter	TOF – Time of Flight
EMU – Extravehicular Mobility Unit	UMA – Umbilical Mating Assembly
EVA – Extravehicular Activity	

Frangible Material Source	Application	Description	Control	
Photo Multiplier Tubes (PMT)	Electromagnet Calorimeter (ECAL)	Hamamatsu R7600-00-M04	Potted into PMT housing with glass front covered with optical coupling/pad.	Vibration testing of design. Thermo-Vacuum Testing
Photo Multiplier Tubes (PMT)	Ring Image Cherenkov Counter (RICH)	Hamamatsu R7600-00-M16	Potted into PMT housing with glass front covered with optical coupling/pad.	Vibration testing of design. Thermo-Vacuum Testing
Photo Multiplier Tubes (PMT)	Time of Flight (TOF) Upper and Lower Untis	Hamamatsu R5946	Potted into PMT housing with glass front covered with optical coupling/pad.	Vibration testing of design. Thermo-Vacuum Testing
Photo Multiplier Tubes (PMT)	Anti-Coincidence Counter (ACC)	Hamamatsu R5946	Potted into PMT housing with glass front covered contained by fiber optic connector that is vented through filter foam. Four PMT are enclosed within sealed volumes with filtered vents.	Vibration testing of design. Thermo-Vacuum Testing
Silicon Wafers	Tracker	Silicon wafers are bonded to metalized Upilex film which is bonded to 5 mm AIREX foam which is bonded to a carbon fiber layer and	Silicon is adhered and retained to the Upilex film.	Vibration testing of design. Thermo-Vacuum Testing

Frangible Material Source	Application	Description	Control	
		finally to a 5 mm aluminum ladder.		
Laser Tracker Optics	Tracker Alignment System	Reflective interface to take fiber optics laser energy and directing through Tracker	Reflective surfaces are glued to housing.	Review of Design Inspection of as built hardware Thermal-Vacuum Testing
Laser Diodes, Optics and Fiber Optics	Tracker Alignment System	Laser Diodes, Splitter, fiber optics	Laser Diodes, Optics and Fiber Optics are contained in laser source boxes contained by structure and filtered vent. Fibers are cladded and jacketed.	Review of Design Inspection of As-built hardware.
Fiber Optics Cable	Tracker Alignment System	Fiber optics that carry photons from sensitive sensors or avionics data.	Fiber optics utilizes standard fiber optic techniques of bonding fibers/sealing cables.	Thermo-Vacuum Testing
Fiber Optics Cable	UMA-EVA Connector			
Fiber Optics Cable	EVA Panel to Avionics box			
Avionics	Fiber Optics data cable			
Fiber Optics Cable	Anti- Coincidence Counter (ACC)	Fiber optics collect photons from collectors to PMT	Fibers are non-frangible polymer not glass. Contained in cables. Fibers in connectors are contained by connector housing and filters in housing vents.	Review of Design Inspection of as built hardware
ACC Sensor Fibers	Anti-Coincidence Counter	Strands of fiber optic collect photons from	Fibers are polymer and not glass and non	Review of Design

Frangible Material Source	Application	Description	Control	
	(ACC)	energetic radiation passing through ACC.	frangible. Fibers are bonded into the ACC Scintillator Panels (BICRON BC 414) with Optical cement (BC 600)	Inspection of as built hardware
ECAL Sensor Fibers	Electromagnet Calorimeter (ECAL)	Strands of fiber optic collect photons from energetic radiation passing through ECAL	Fibers are polymer fibers (doped polystyrene) contained within the lead layers of the ECAL. The lead has been machined to accept the fibers. Epoxy retains the fibers and layers in place.	Review of Design Inspection of as built hardware
Aerogel	Ring Image Cherenkov Counter (RICH)	Silica Aerogel	Aerogel is contained within RICH Structure and plexiglass cover. Structure is vented through filters and cover is sealed in place.	Review of Design Inspection of as built hardware
Crystalline	Sodium Fluoride Blocks	Solid NaF Crystal	NaF is contained within RiICH Structure and plexiglass cover. Structure is vented through filters and cover is sealed in place.	Review of Design Inspection of as built hardware
Optics (Lenses and Filters)	Star Tracker	Standard Optical components, lenses,	Star Tracker optics are vented through	Vibration testing of design.

Frangible Material Source	Application	Description	Control	
		filters.	mounting methodology and carry no appreciable pressure load.	Thermo-Vacuum Testing

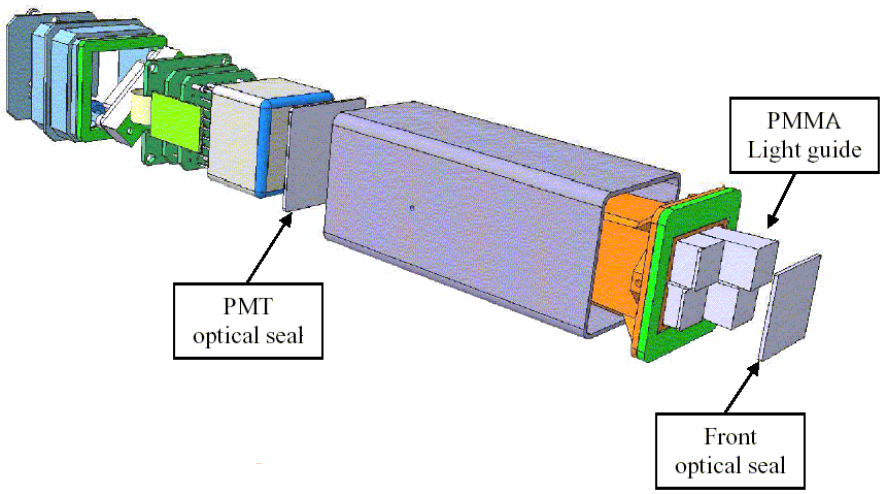

ECAL PMT Assembly

RICH is similar but uses a 4 x 4 light guide assembly and not 2 x 2 and no front optical seal.

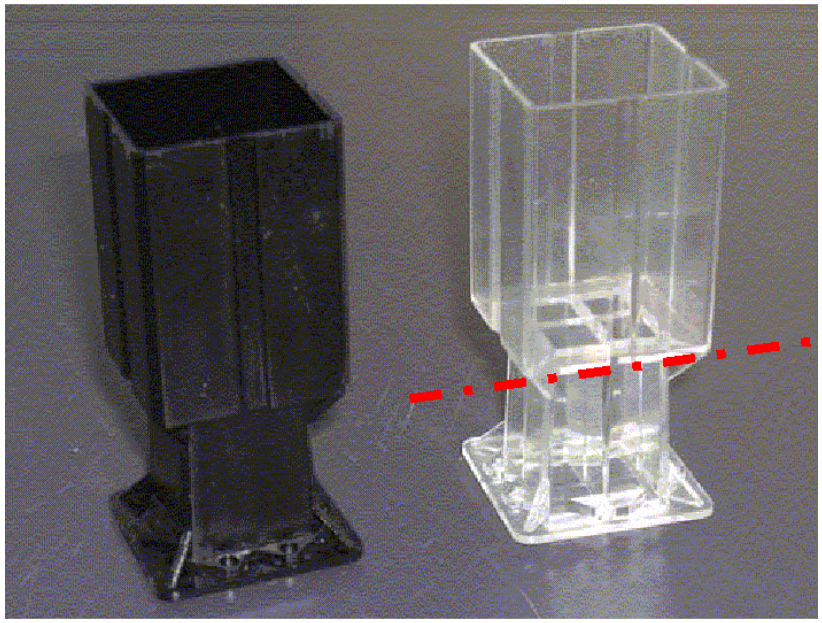

ECAL Interior Housing Structure (dark flight, clear used for potting procedure)

RICH uses a 4 x 4 light guide assembly and not the 2 x 2 assembly of the ECAL

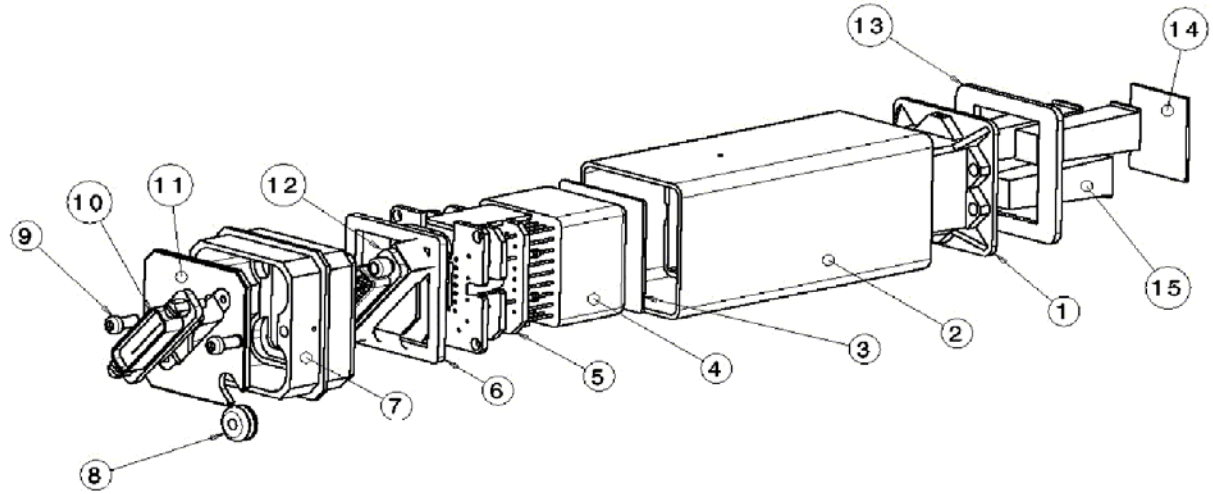

Part number	Description	Material	Processing	Mass per unit (gr.)	Exposed Surface (cm^2)	Coating
1	PMT Box	Black Poly carbonat	Injection	14	0	No
2	Magnetic Shielding	Soft Iron	Bending / welding	68	-	Nickel platted
3	PMT optical coupling	DC 93-500	Moulding	0.3	0	No
4	Photomultiplier multi anodes	R5900U-00-M4	Hamamatsu process	24	0	No
5	Electronics divider + EFE	PCB + Potting DC93-500	-	15	0	DC 93-500
6	Back seal	Therm-a-gap A274	Cutting out	2	0	No
7	End cap	Al. 7075T7351	CNC Milling	9	-	Alodine 1200
8	Grommet	Black Silcone	Injection	0.4	0	No
9	M2.5 CHC Screw	Stainless steel 304	Standard	0.3		No
10	25 p Connector - EIB	GLENAIR M83513/03-D11N		8	0	
11	Connector plate	Al. 7075T7351	CNC Milling	4	-	Alodine 1200
12	25 p Connector - FEE	GLENAIR M83513/04-D11N		10	0	
13	Front seal + reflective foil	Therm-a-gap A274	Cutting out	8	0	No
14	Front optical coupling	DC 93-500	Moulding	0.3	0	No
15	Light guides	PMMA transparent	Injection	1.9	0	No

ECAL PMT Construction

RICH construction similar but uses a 4 x 4 light guide assembly, Hamamatsu R5900U-00-M16 and no front optical seal

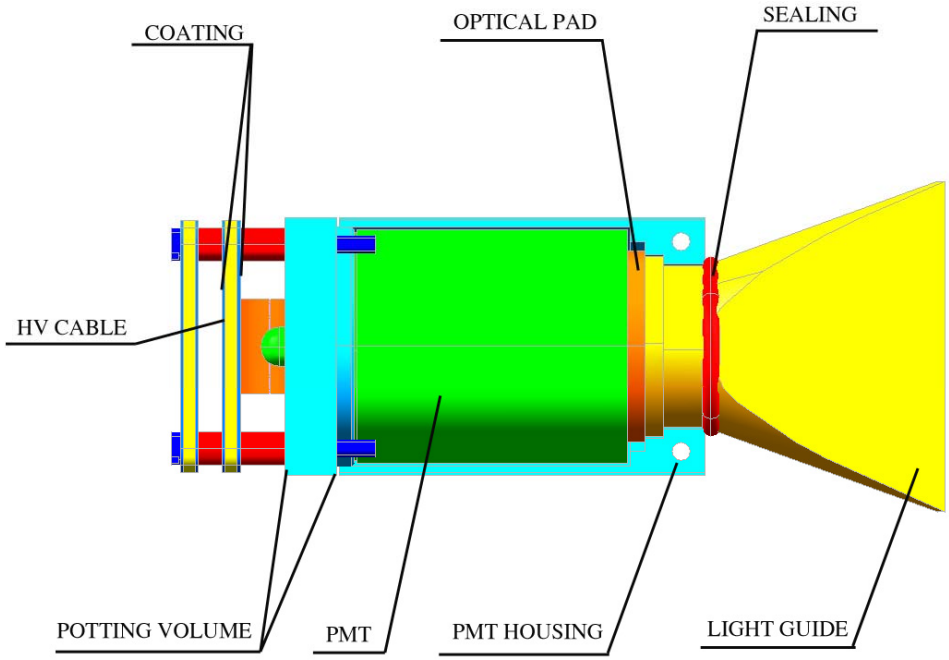

TOF Cross Section for PMT Glass Containment

ACC similar design except for Light Guide design and optical pad.

ACC Differences follow.

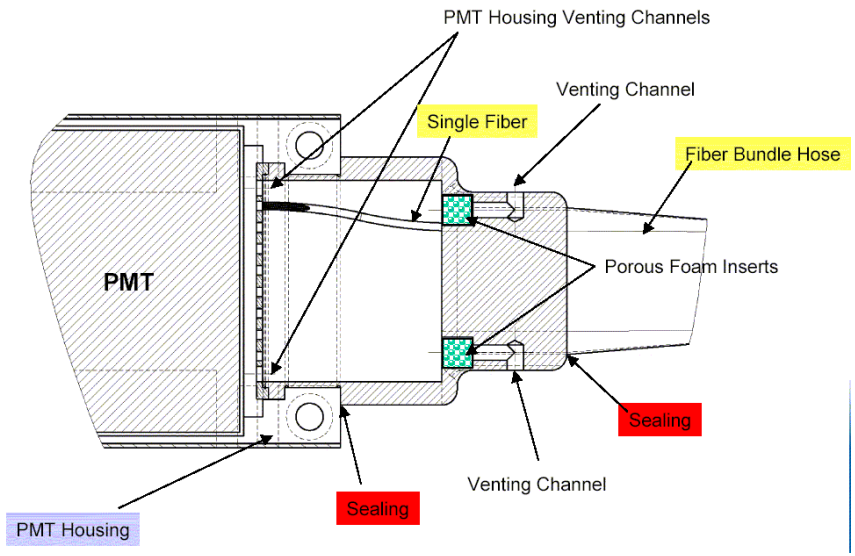

ACC PMT Construction Detail (Variance from TOF design)

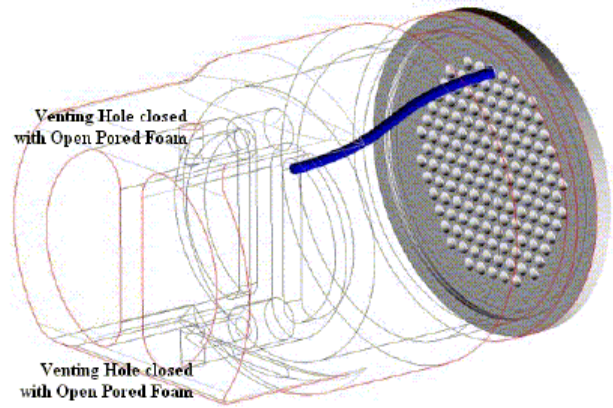

ACC PMT Fiber Routing and Vent Location

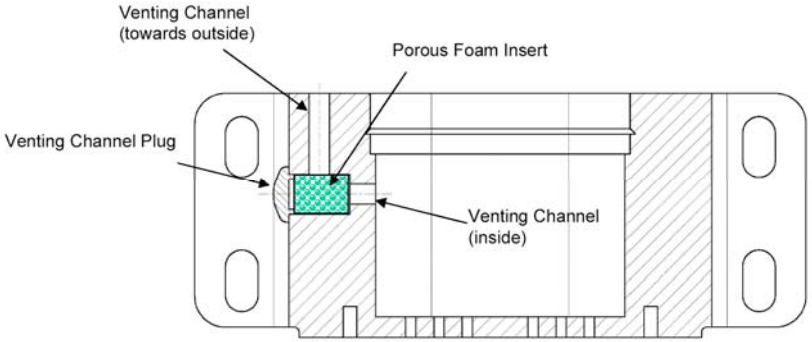

ACC PMT and Fiber Containment

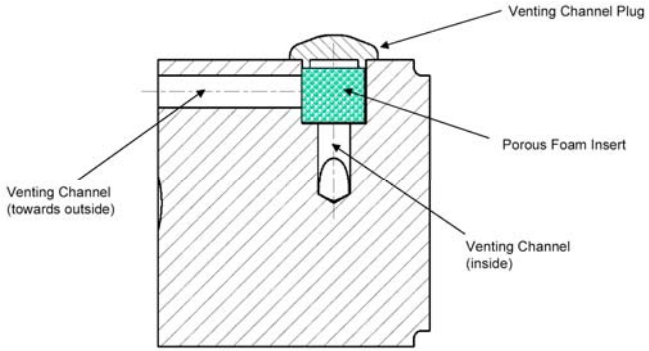

ACC Fiber “Y” Junction Connector Venting Detail

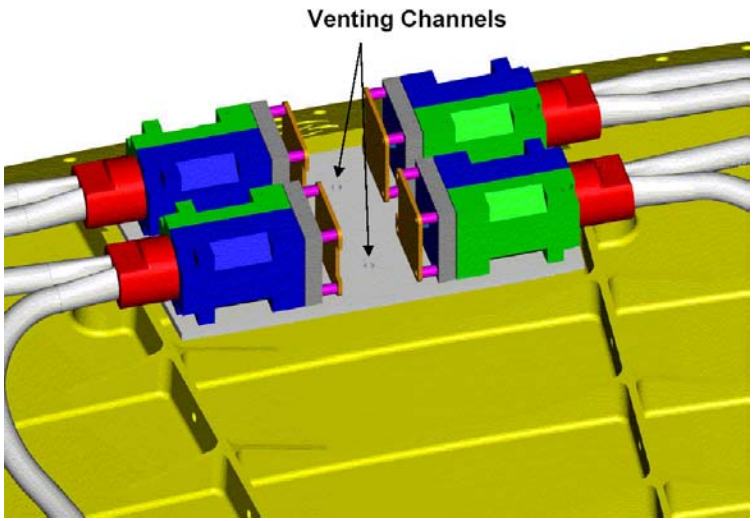

ACC PMT Mounting Enclosure (Cover Removed)

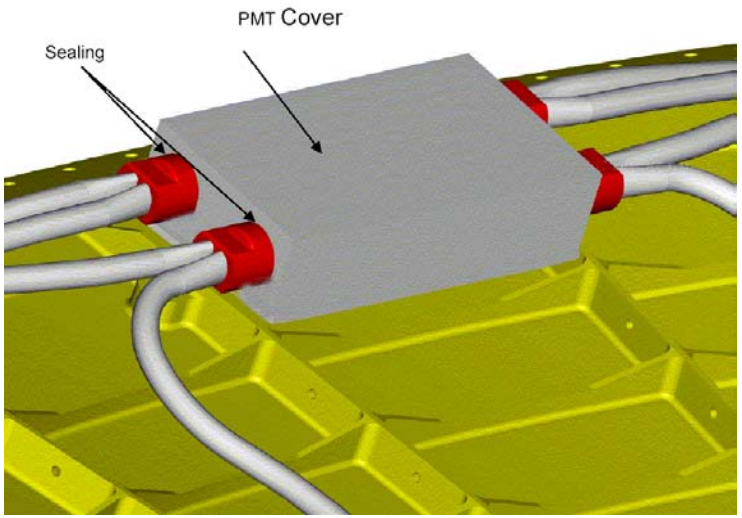

ACC PMT Mounting with Cover

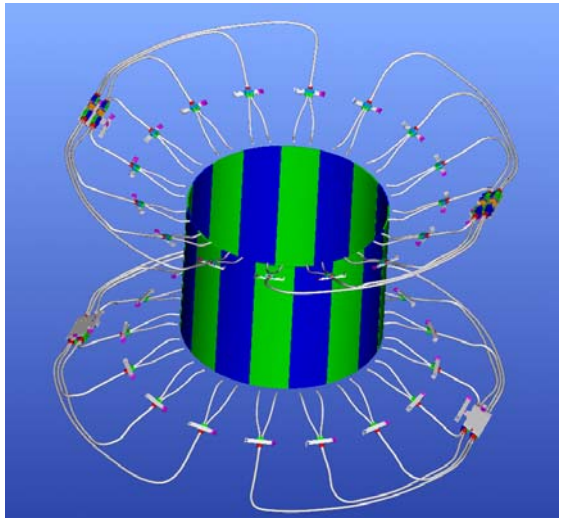

ACC Fiber Optics and PMT Layout

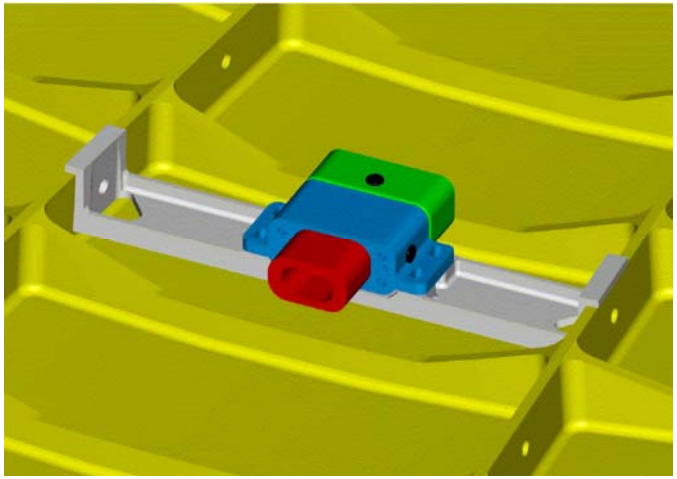

ACC Fiber Optics Coupler

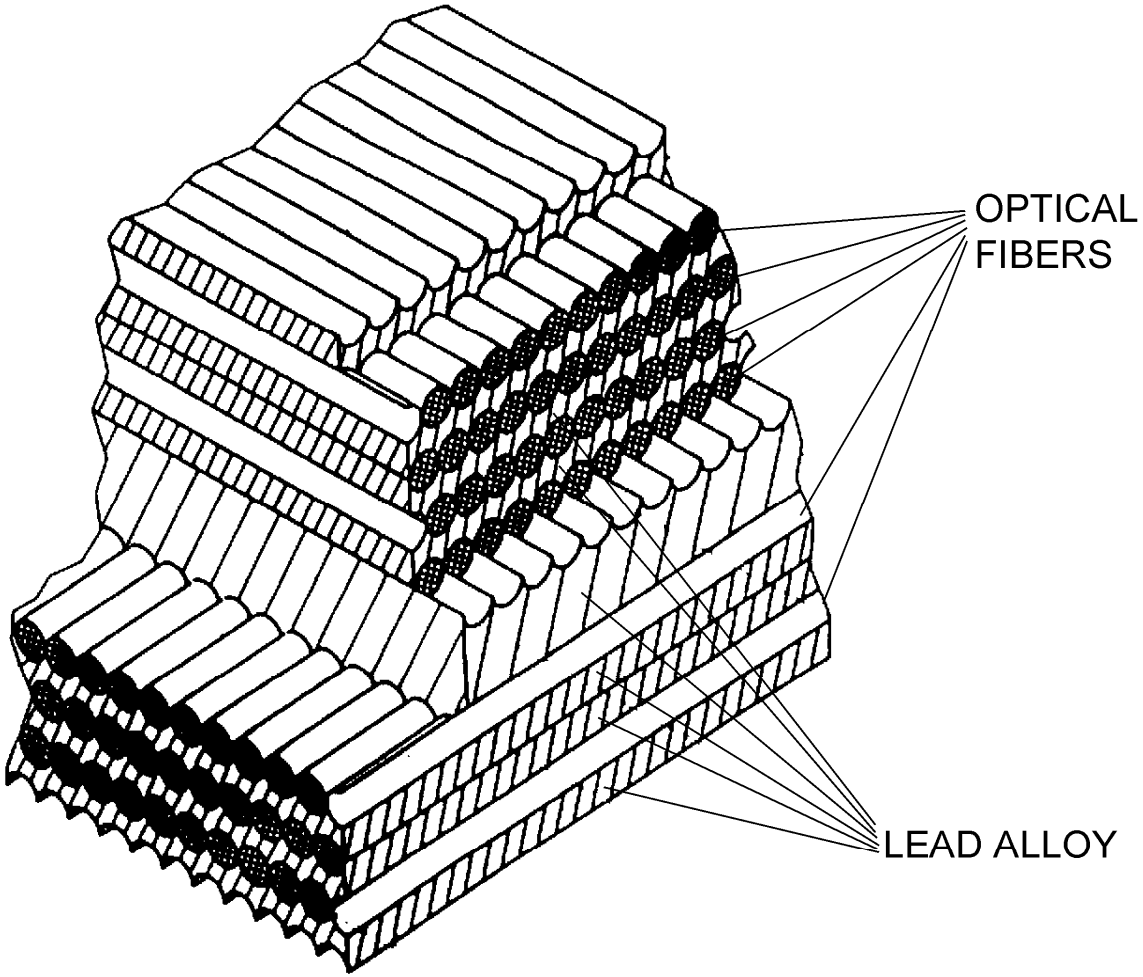

ECAL Lead-Fiber Sandwich

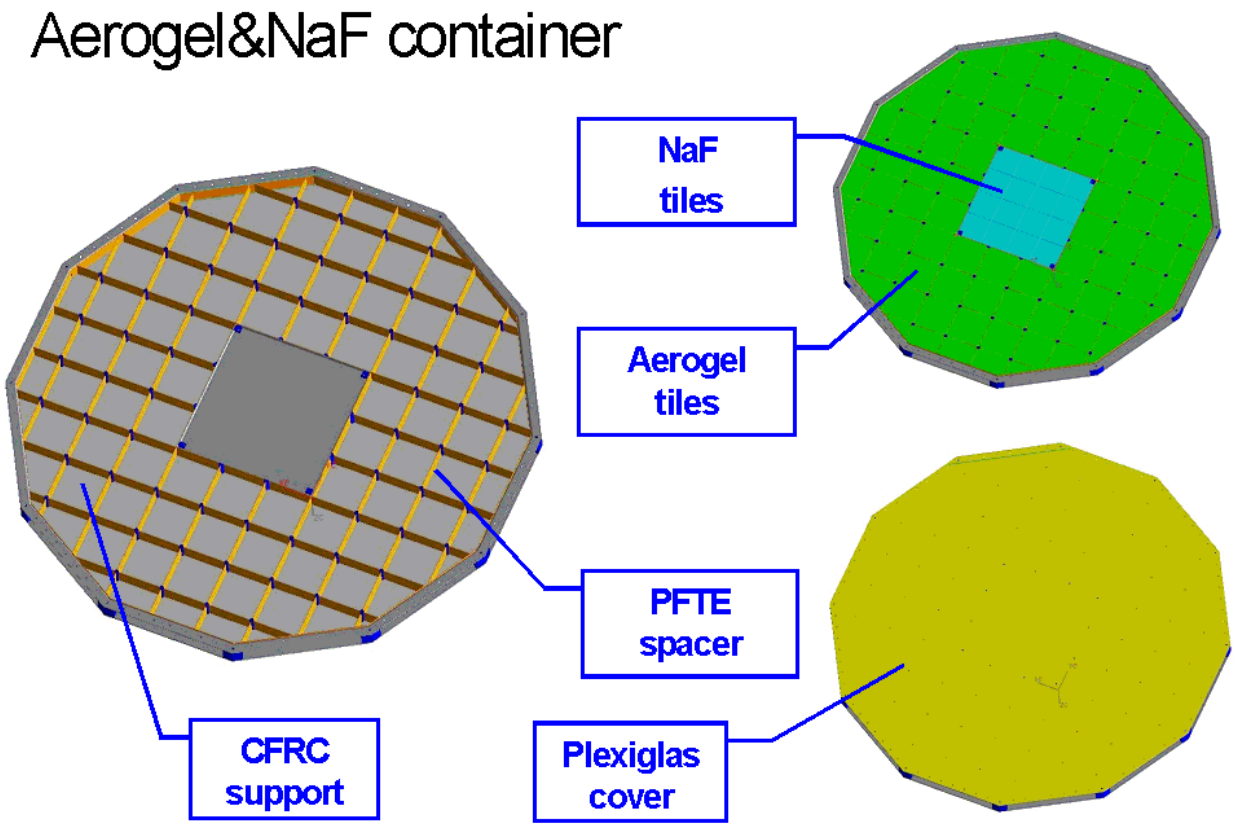

RICH Aerogel and NaF Containment

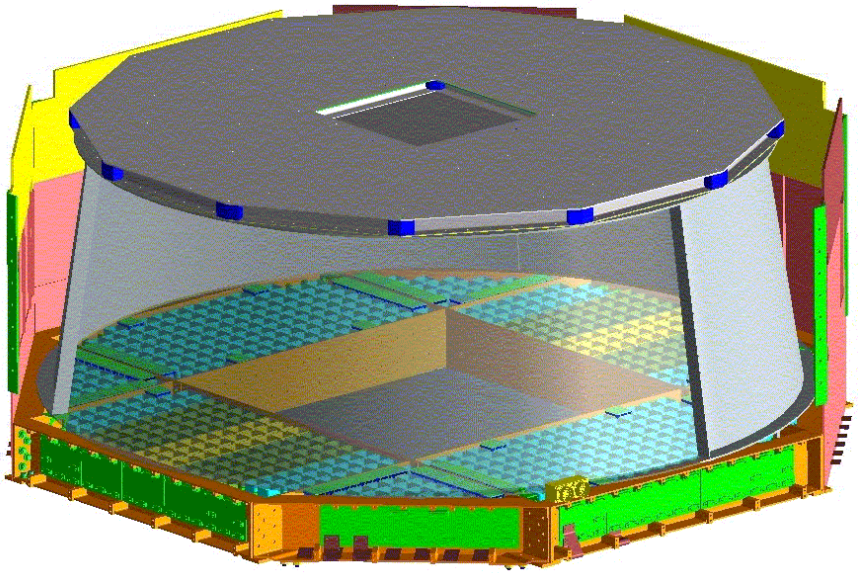

RICH Cutaway Diagram

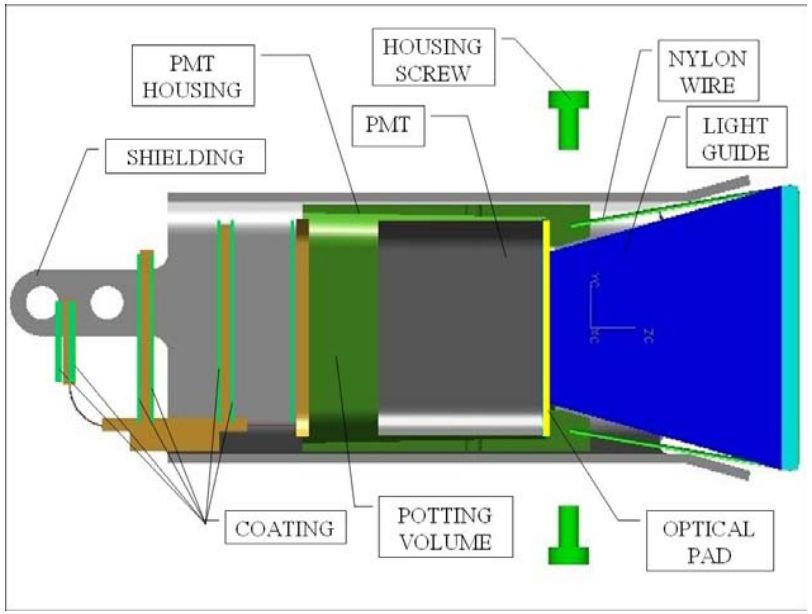

RICH PMT Construction

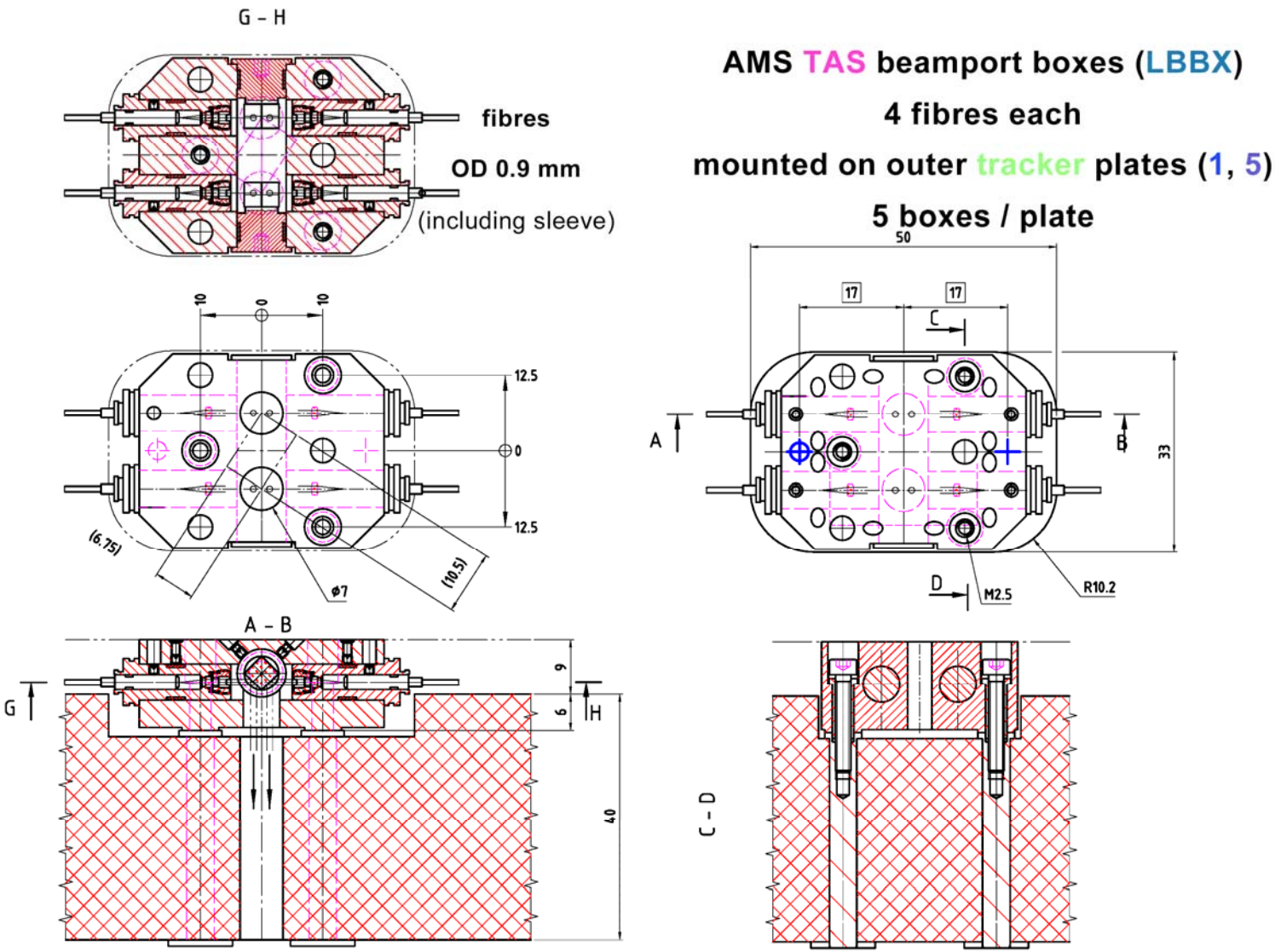

Tracker Laser Alignment System Beam Port Design

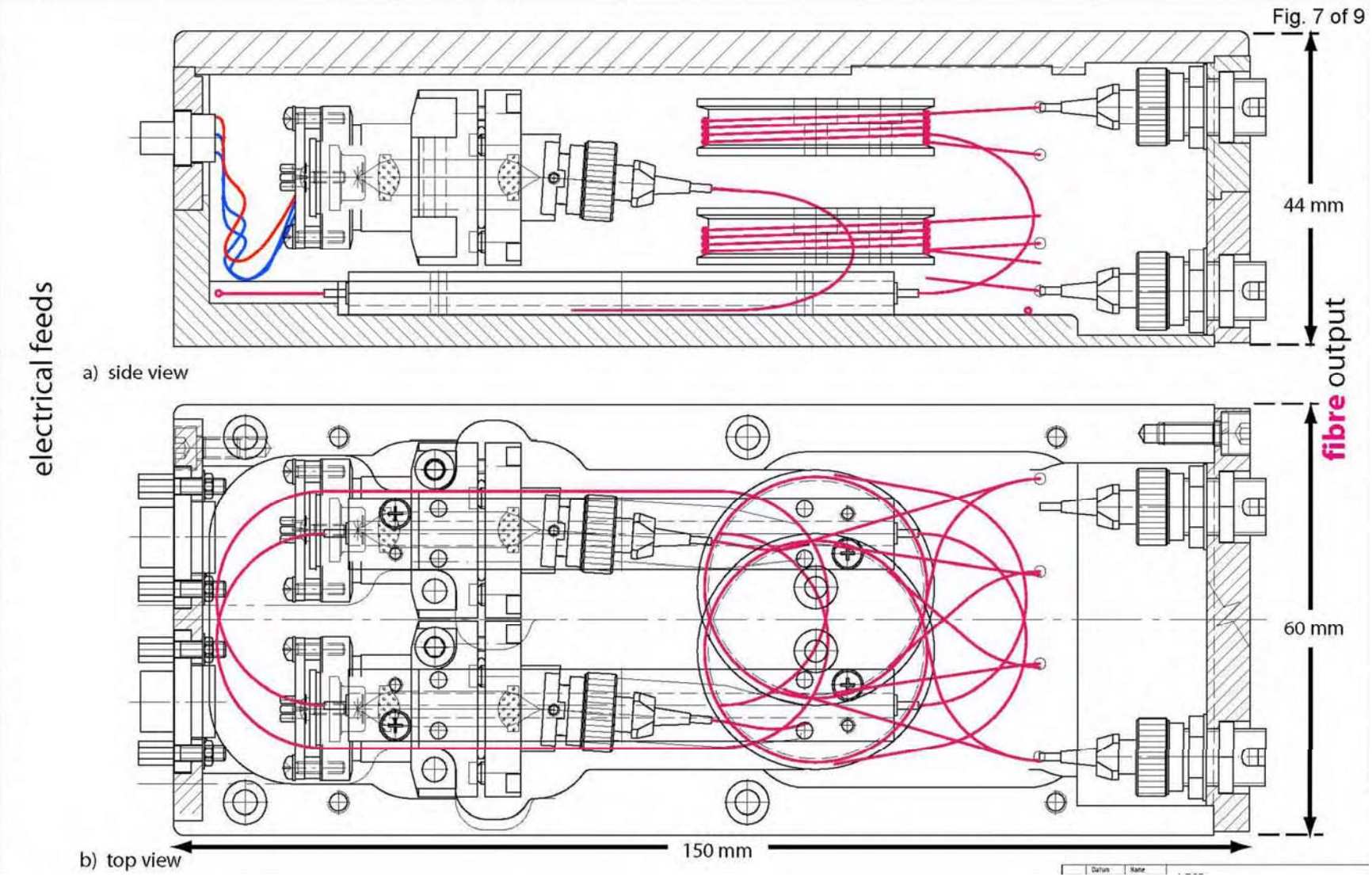

Tracker Alignment System Laser Fiber Coupler Box

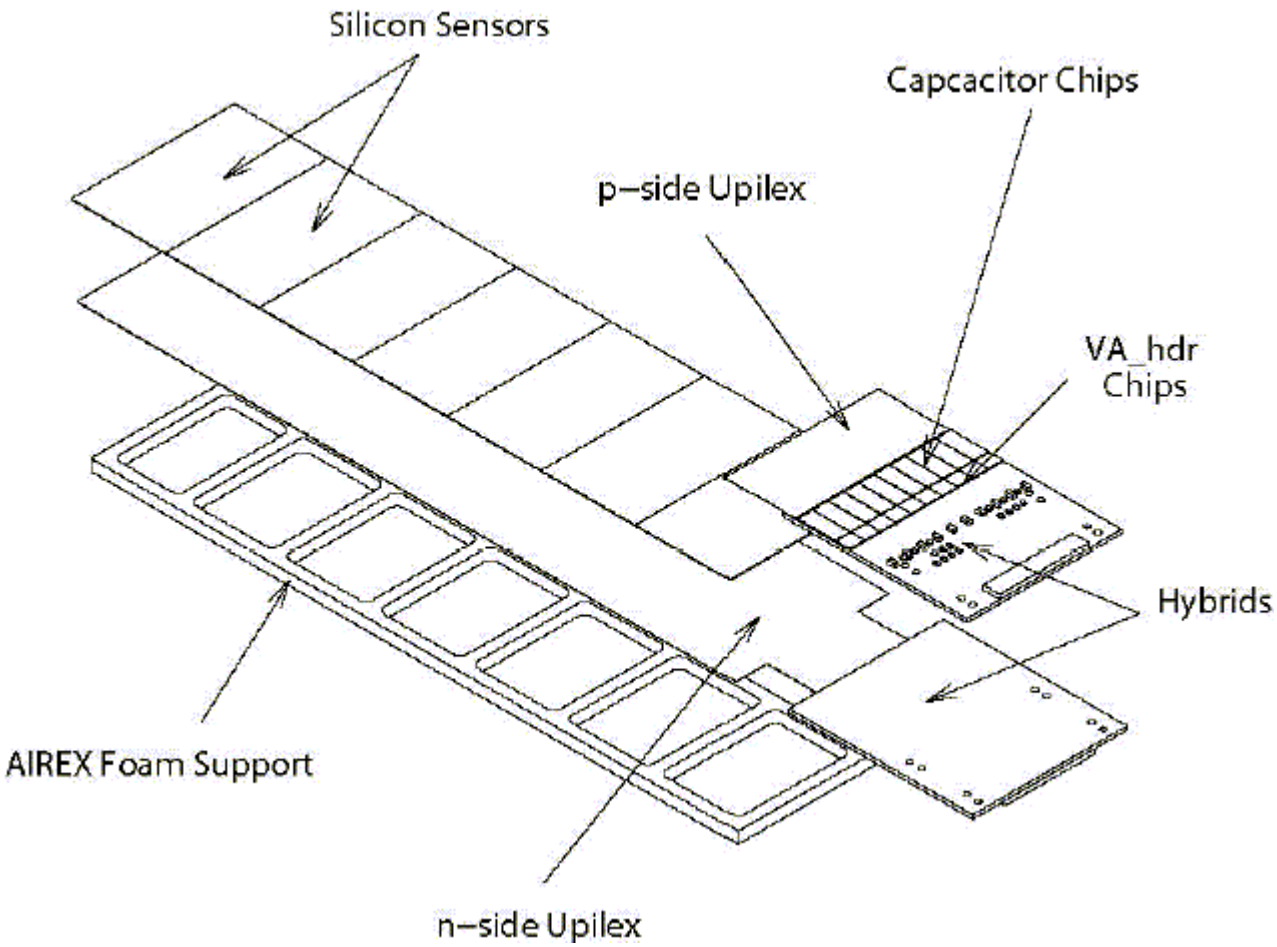

SILICON TRACKER Construction

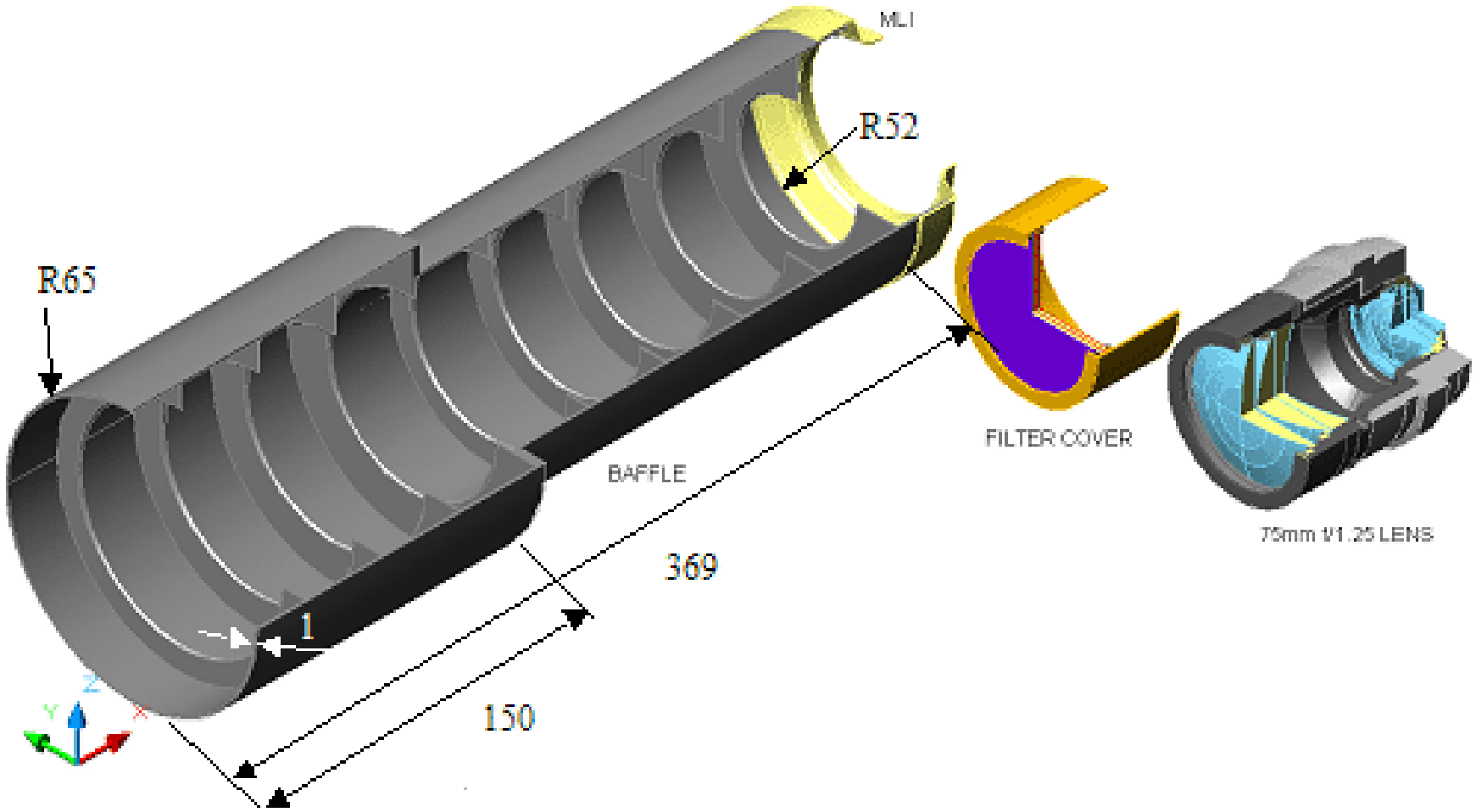

Star Tracker Optics

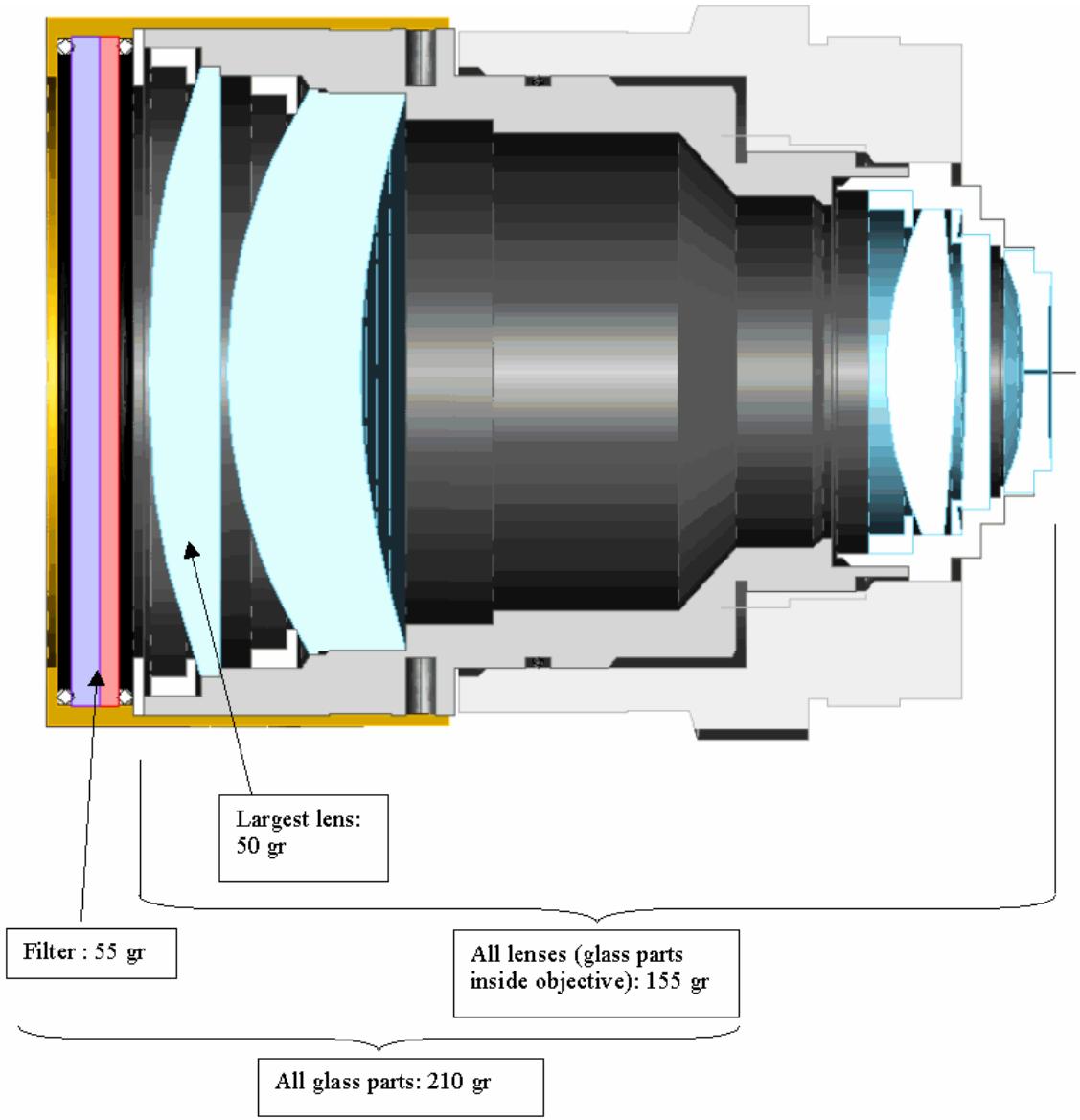

Significant Mass Characteristics of Star Tracker Optical Components