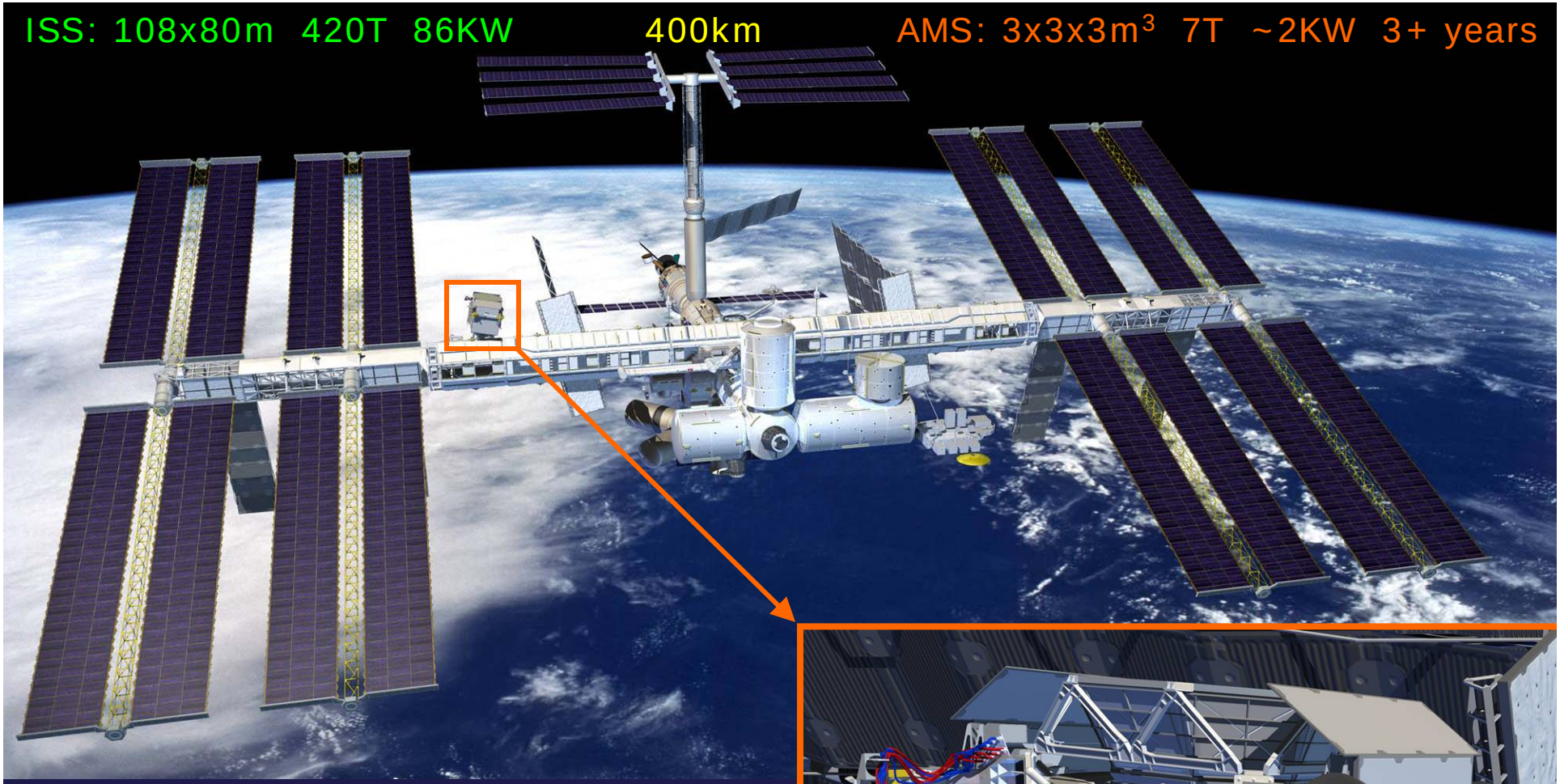

AMS-02 Avionics & Data

ACOP PDR (JSC 9 Mar 2005)

Mike Capell

Senior Research Scientist

Cosmic rays

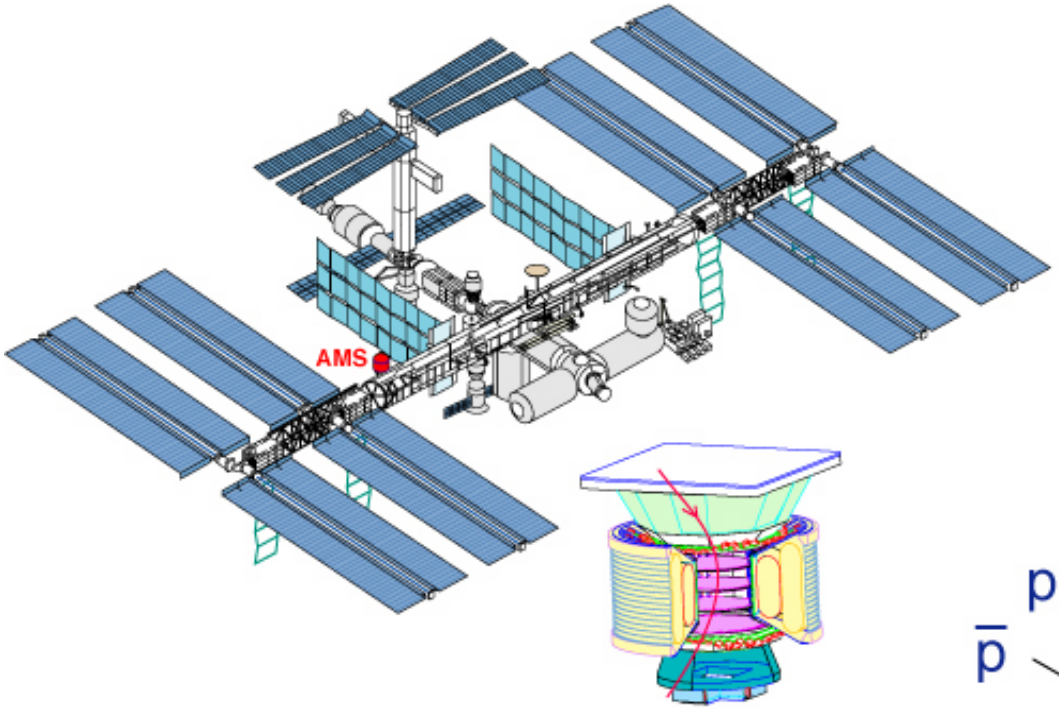

1- Neutral component:
no charge, no mass

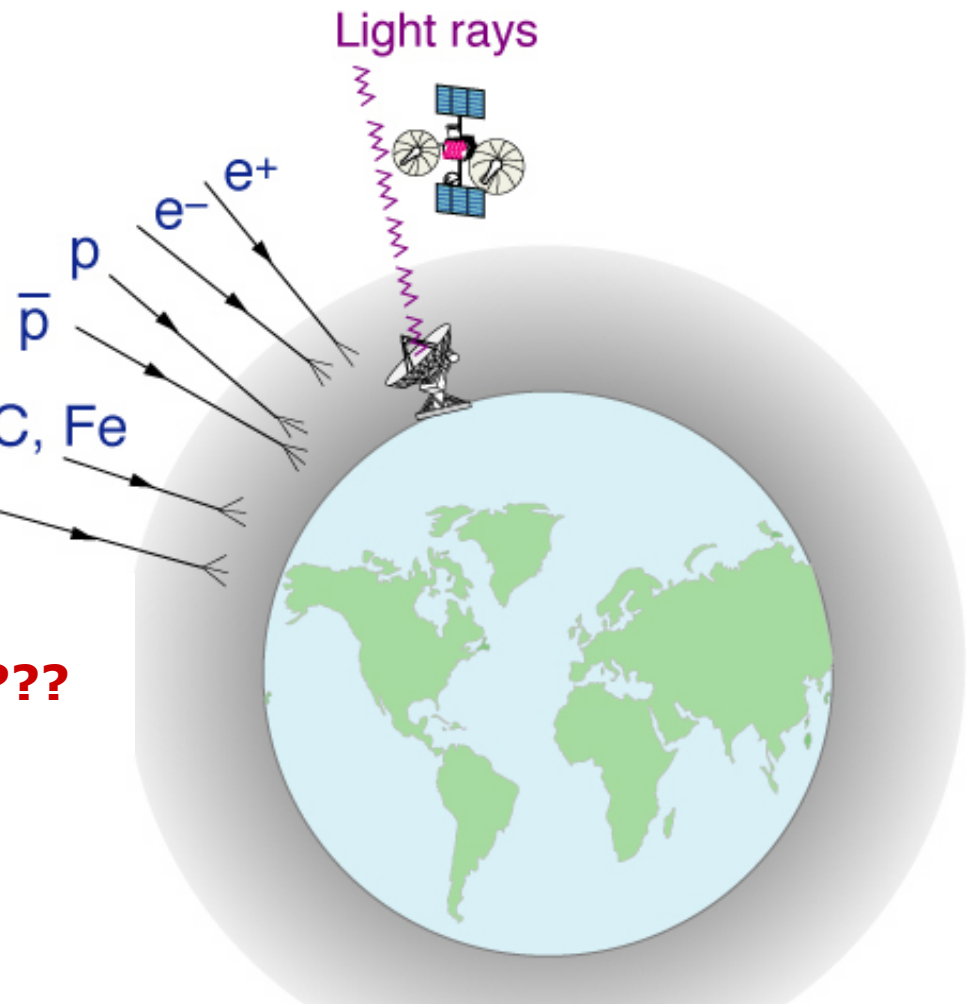

2- Charged component:
carry nuclear charge.

Looking for
Antimatter, Dark Matter and ???

y96656_3b

The international AMS Collaboration

NASA provides three shuttle flights and project management (JSC/EA – S. Porter)

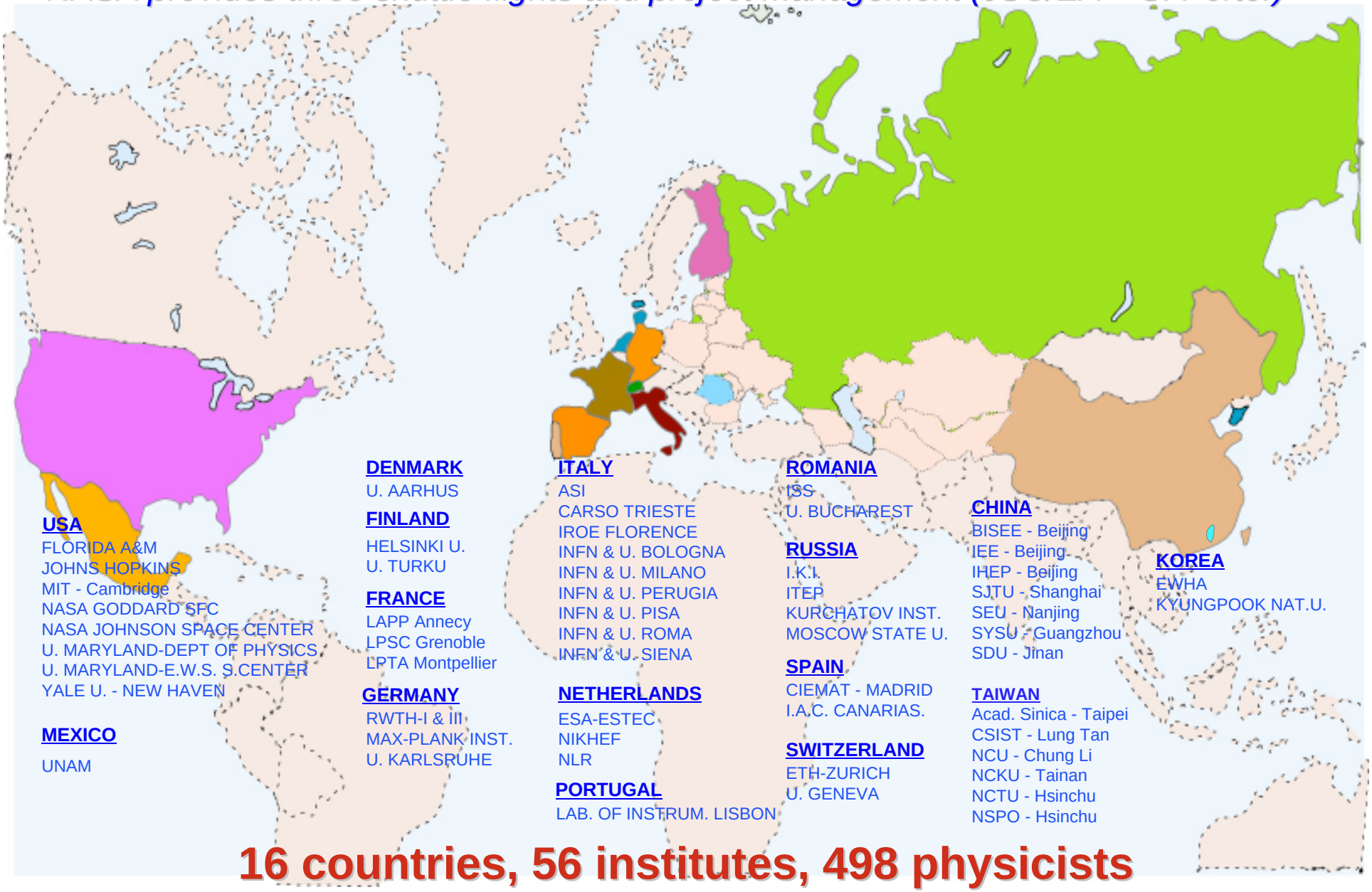

16 countries, 56 institutes, 498 physicists

Alpha Magnetic Spectrometer

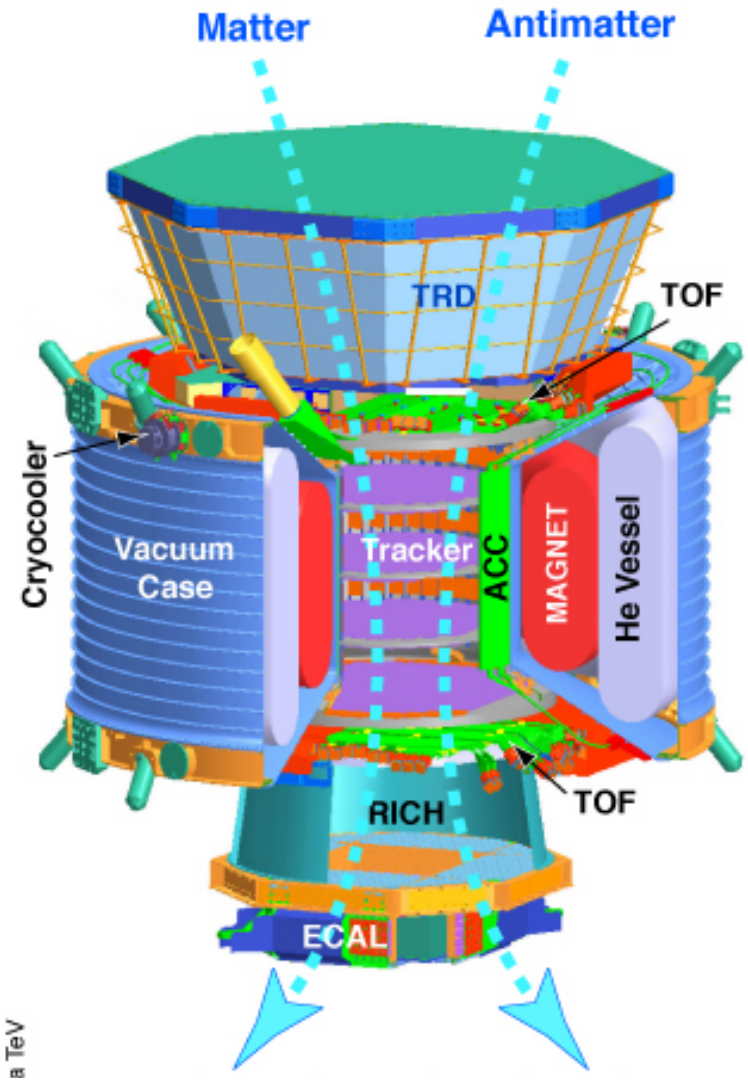

300,000 channels of electronics $\Delta t = 100$ ps, $\Delta x = 10\mu$

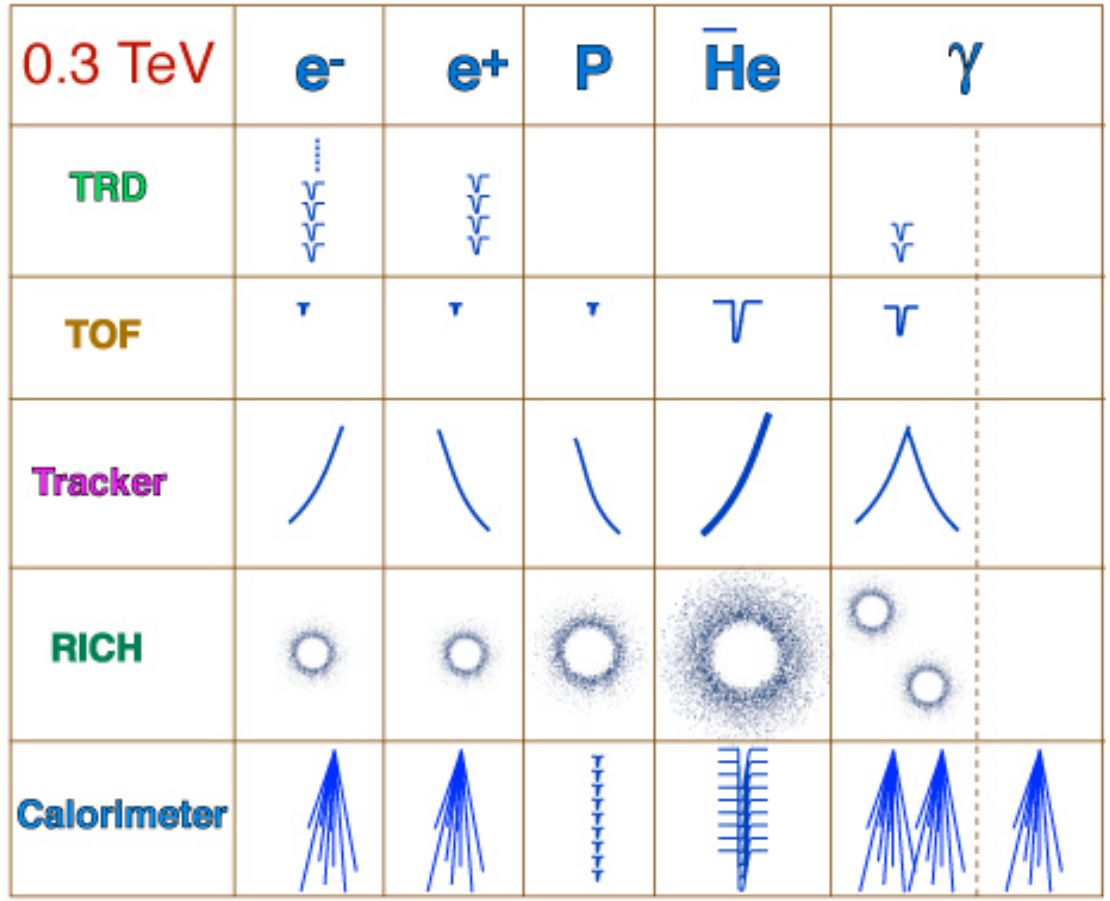

AMS Electrical Interfaces on ISS

- Power:
  - 109-124VDC
  - ~2KW
- LRDL
  - 1553B Bus
  - 1 Kbit/s in
  - 10 Kbit/s out
  - 10 B/sec CHD
- HRDL
  - Taxi F/O
  - <2Mbit/s>$_{orbit}$

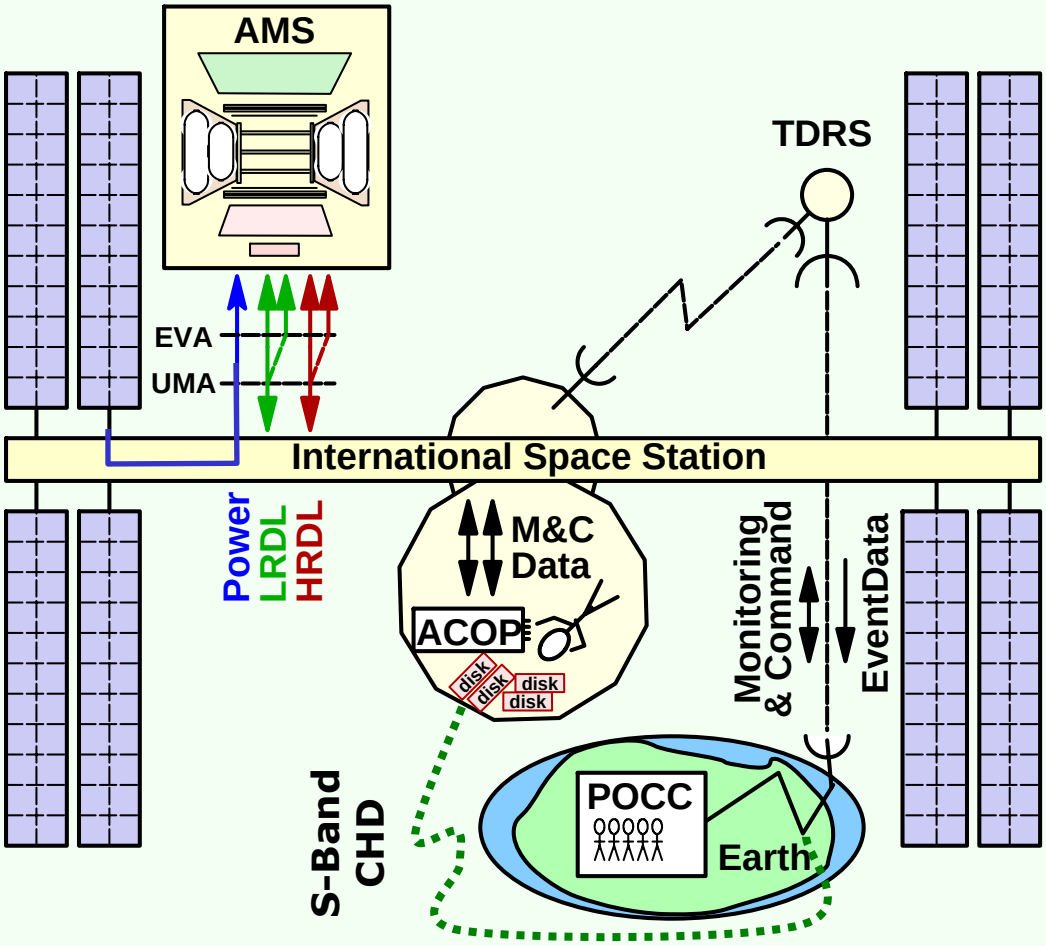

ACOP: Archive Science Data

Power Distribution within AMS

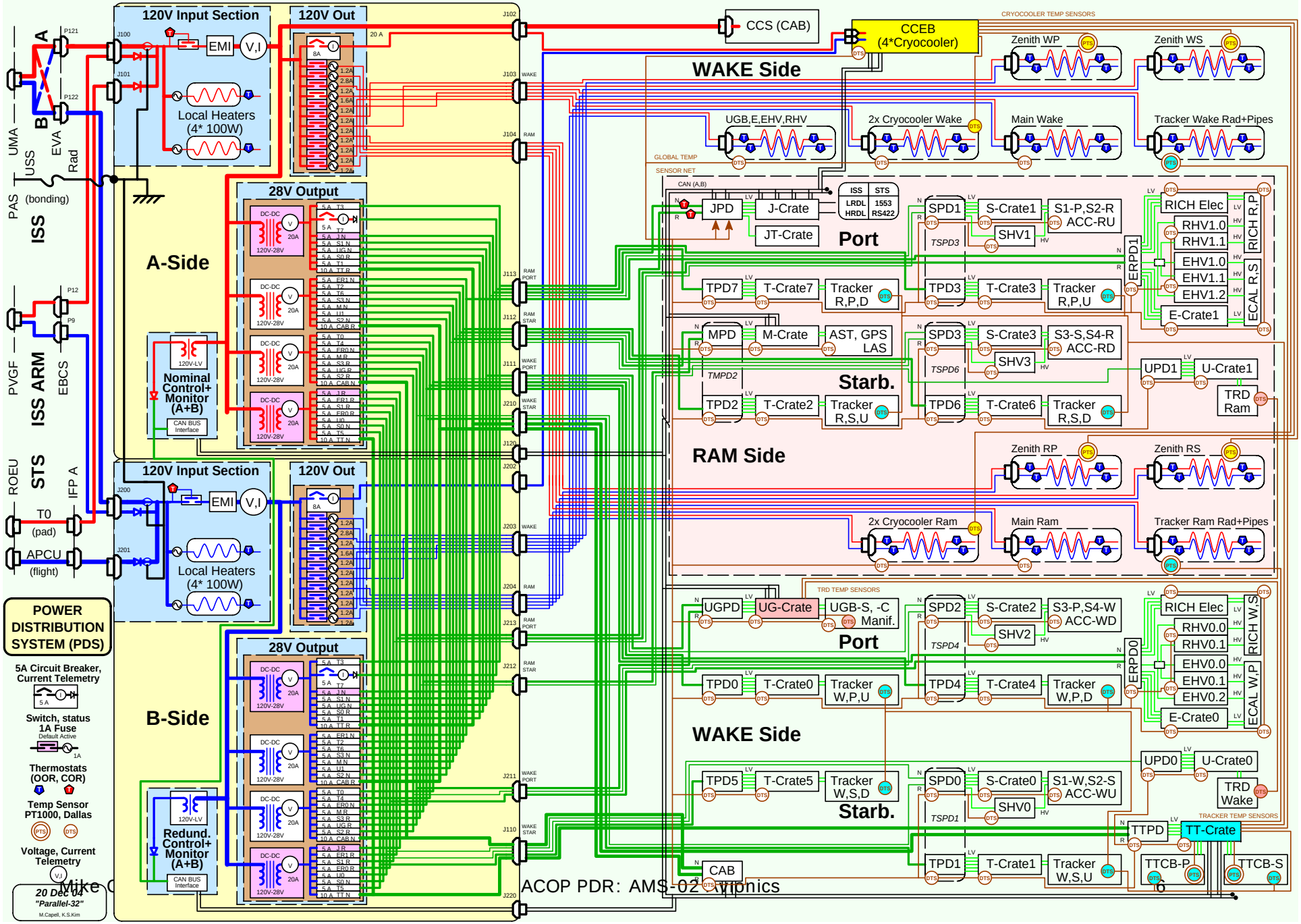

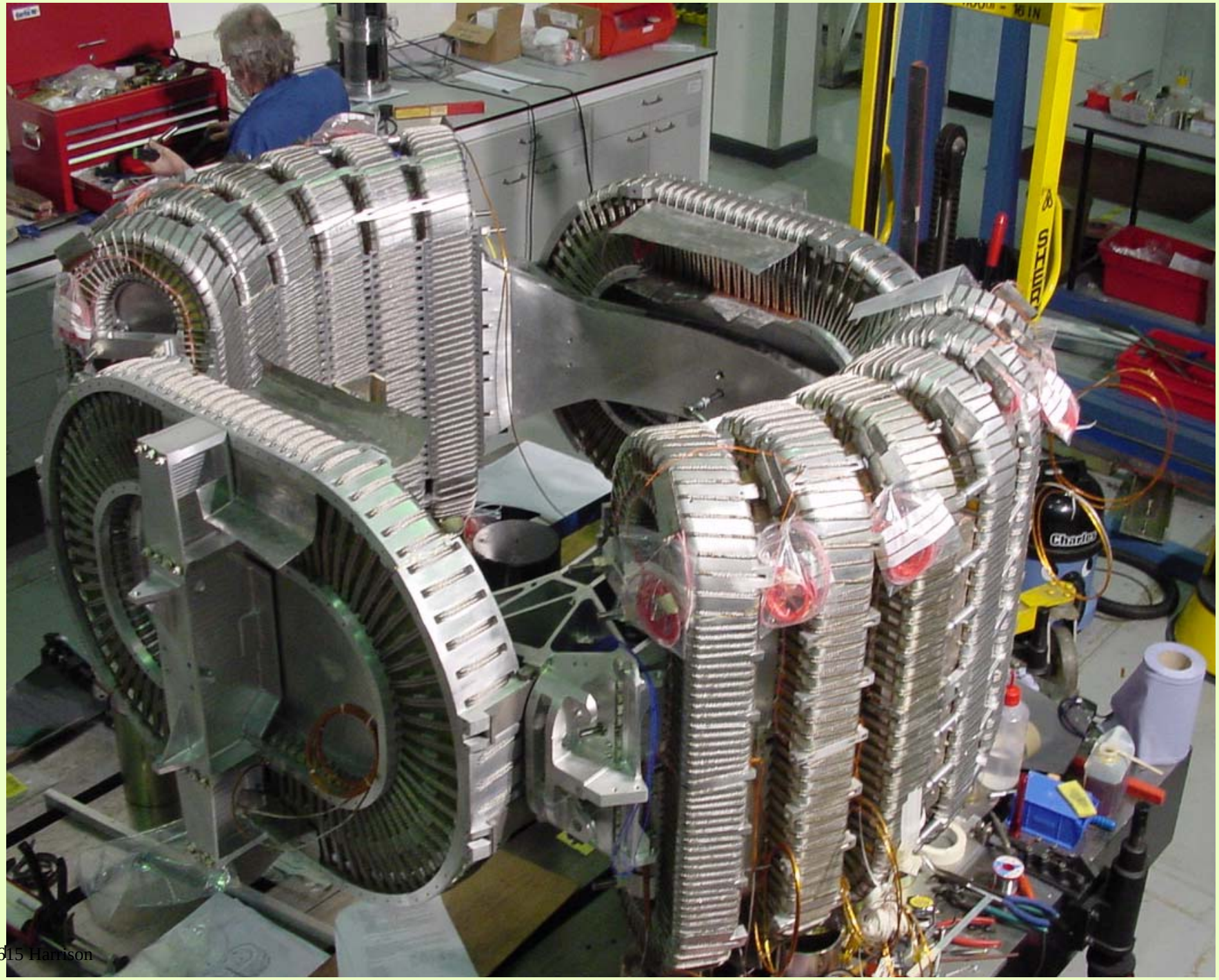

Y04K615 Harrison

AMS-02 Cryogenics System

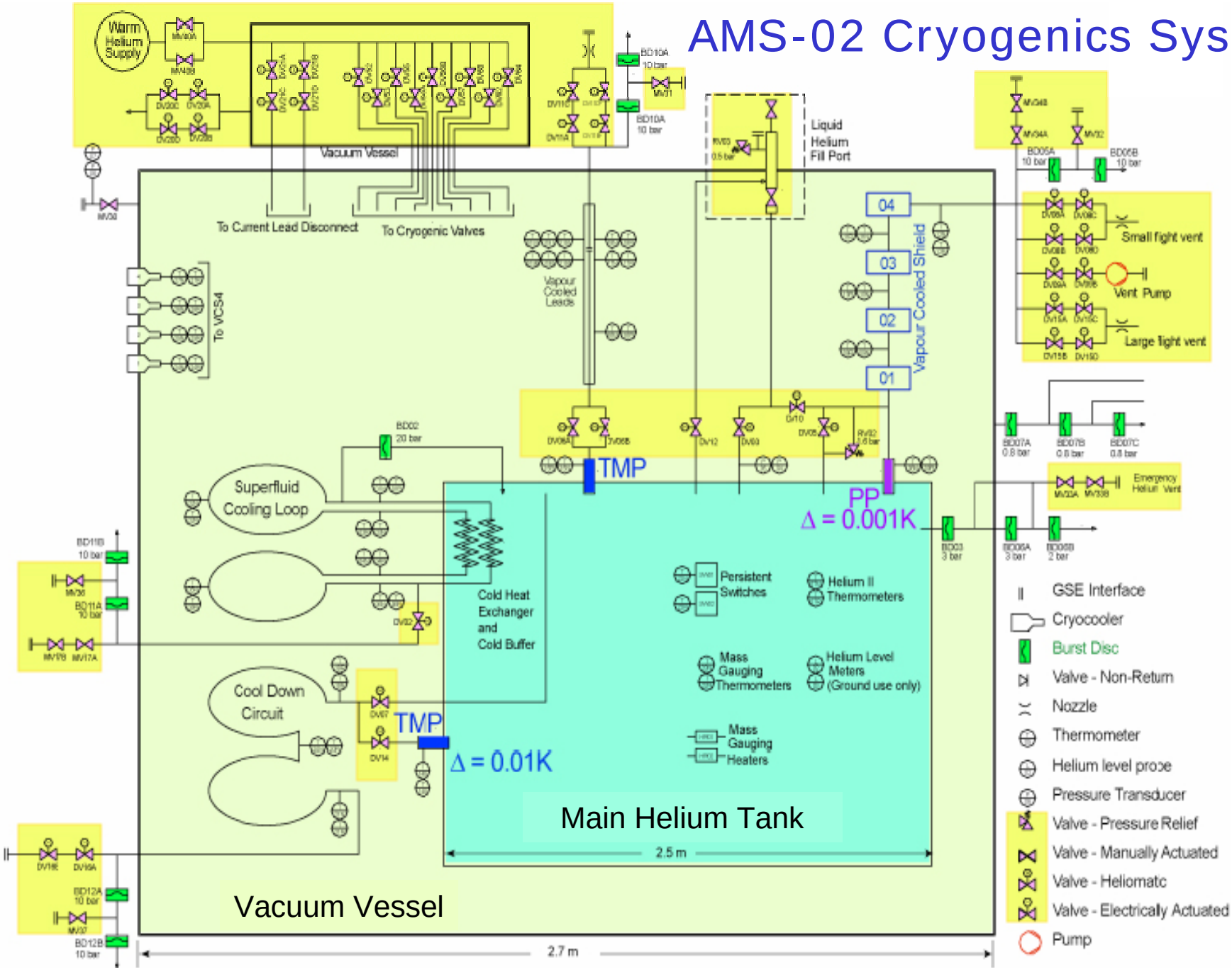

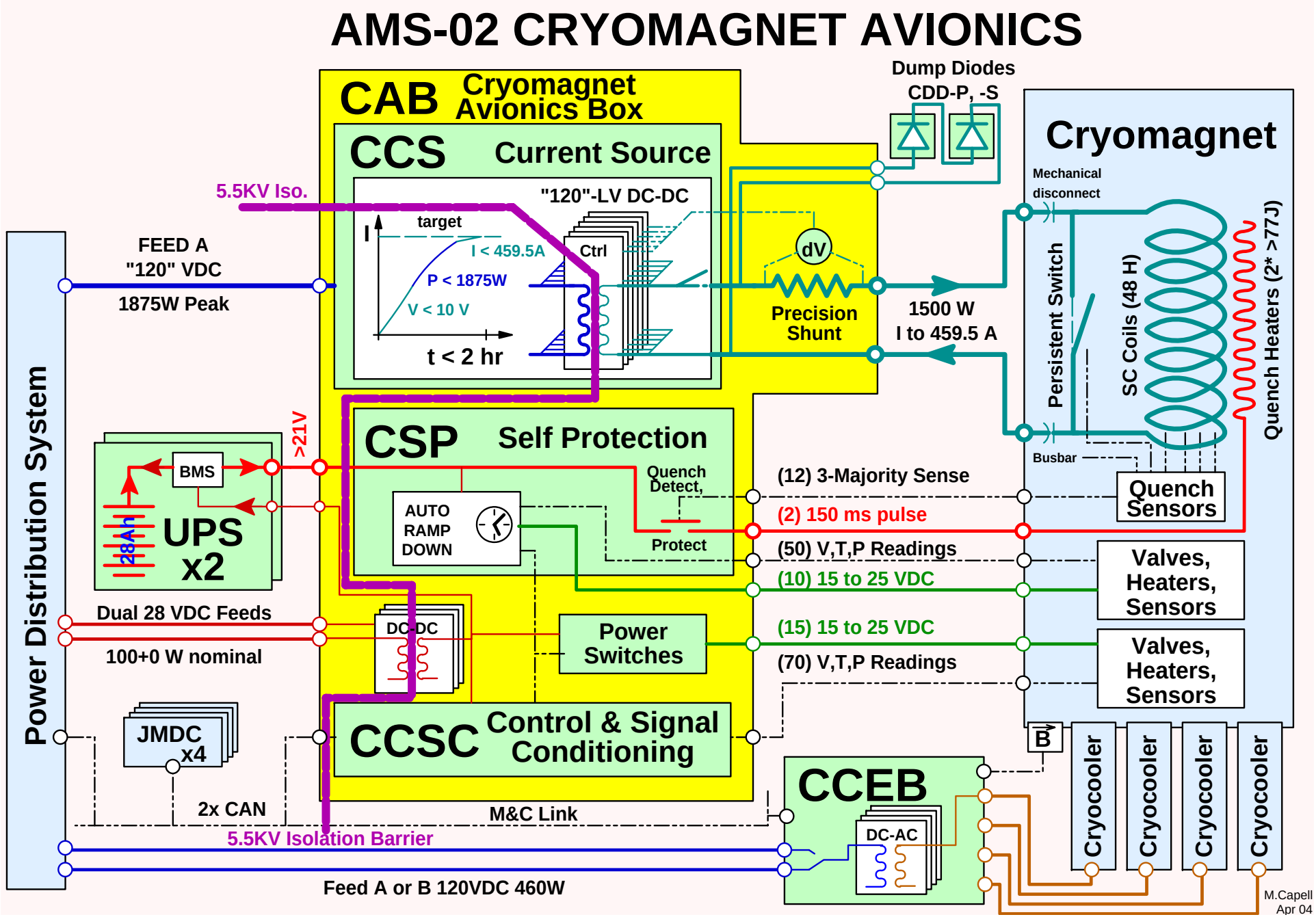
AMS-02 CRYOMAGNET AVIONICS
CAB Cryomagnet Avionics Box
CCS Current Source
"120"-LV DC-DC
target
I < 459.5A
P < 1875W
V < 10 V
t < 2 hr
Ctrl
5.5KV Iso.
FEED A
"120" VDC
1875W Peak
Dump Diodes
CDD-P, -S
dV
Precision Shunt
1500 W
I to 459.5 A
Cryomagnet
Mechanical disconnect
Persistent Switch
SC Coils (48 H)
Quench Heaters (2* >77J)
Busbar
Quench Sensors
Power Distribution System
>21V
BMS
UPS x2
28Ah
CSP Self Protection
AUTO RAMP DOWN
Quench Detect,
Protect
(12) 3-Majority Sense
(2) 150 ms pulse
(50) V,T,P Readings
(10) 15 to 25 VDC
(15) 15 to 25 VDC
(70) V,T,P Readings
Valves, Heaters, Sensors
Valves, Heaters, Sensors
Dual 28 VDC Feeds
100+0 W nominal
DC-DC
Power Switches
JMDC x4
CCSC Control & Signal Conditioning
2x CAN
M&C Link
5.5KV Isolation Barrier
CCEB
DC-AC
B
Cryocooler
Cryocooler
Cryocooler
Cryocooler
Feed A or B 120VDC 460W
M.Capell
Apr 04

Subdetector Requirements: Tracker

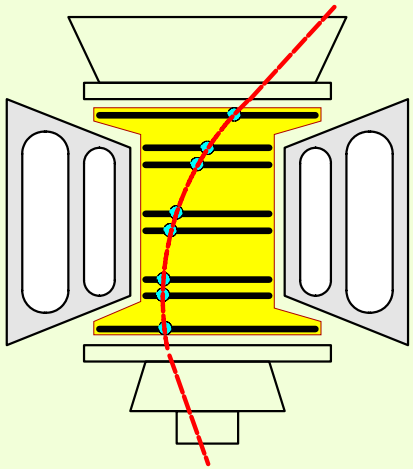

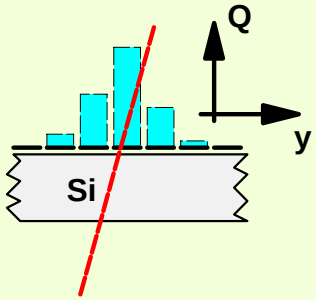

$$\langle y \rangle = \frac{\text{sum}(Q * y)}{\text{sum}(Q)}$$

$$Z = f(\text{sum } Q)$$

- 8 planes, 6.3m^2, 200K readout strips measure:
  - Track bending in B field to 10um: Momentum
  - Energy deposit: particle charge Z
- Signal (few fC) to noise required: 10,000::1
- Needs EMI shielding, power supply filtering and careful signal processing.

Subdetector Requirements: ToF and ACC

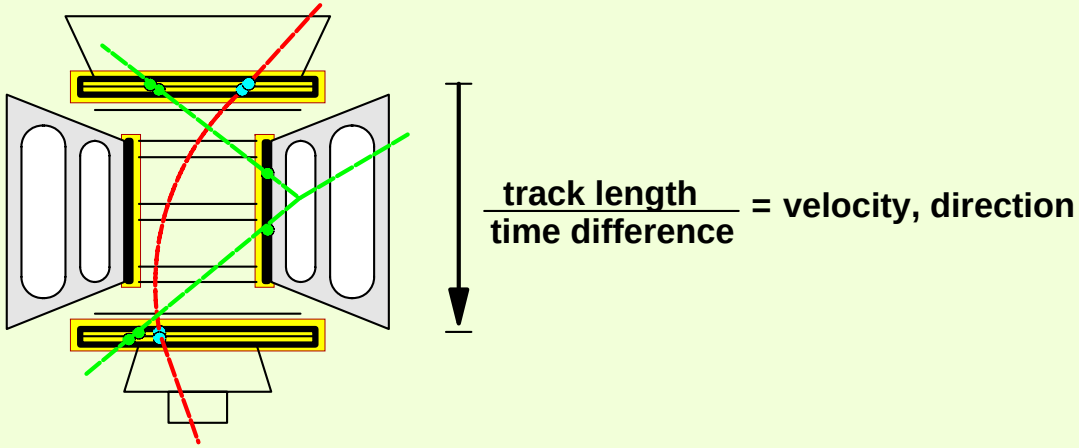

- 4 planes ToF, 1 layer ACC
- 42 plastic scintillator paddles, 2 PMT/end
  Transit time (100 psec): Velocity
  Energy deposit: Z
  History (1nsec/16usec): out of time junk particles.
- Fast (~30nsec) coincidence between upper & lower ToF planes provides “fast” trigger (<5 KHz)
- ToF+ACC reject out of acceptance tracks & other uninteresting events
- Starts digitization and data flow for all detectors (<2KHz)

Subdetector Requirements: TRD

- 20 layers of “radiator” & 5248 “straw tube” PWCs filled with Xenon detect transition radiation X-rays produced as function of velocity (v~c) by light= fast particles (e, not p, He,…).
- Gas amplification::HV.
- Signal size: 100 fC.
- Particle also leaves: 30 fC.
- e::p rejection requires careful control of gas gain: density, temperature, HV, mixture, impurities.

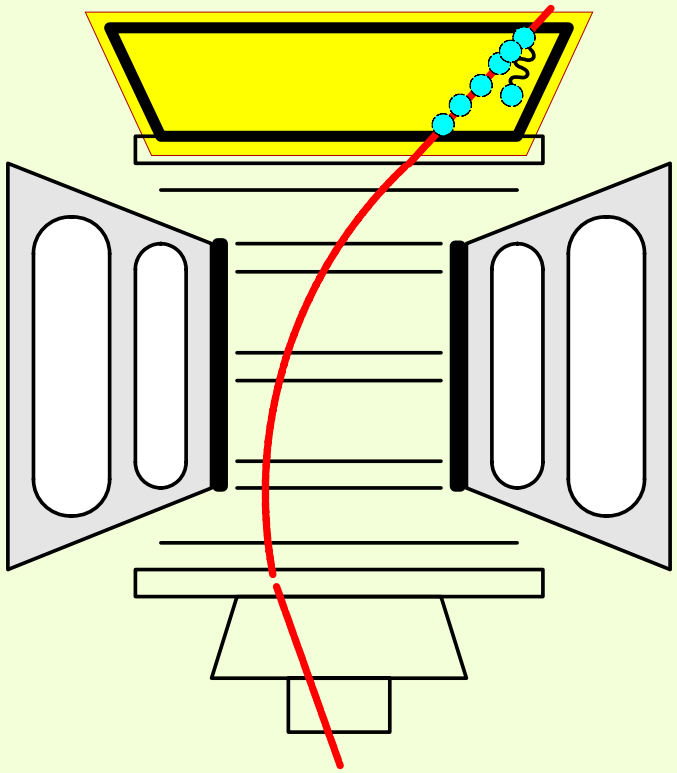

Subdetector Requirements: RICH

- Radiator, mirrored expansion volume, image plane: 680 16-pixel PMTs,

- Cone of Cerenkov photons
  Radius: velocity,
  Number: charge Z^2.

- Careful signal processing to detect single photons.

- Large dynamic range to detect high Z.

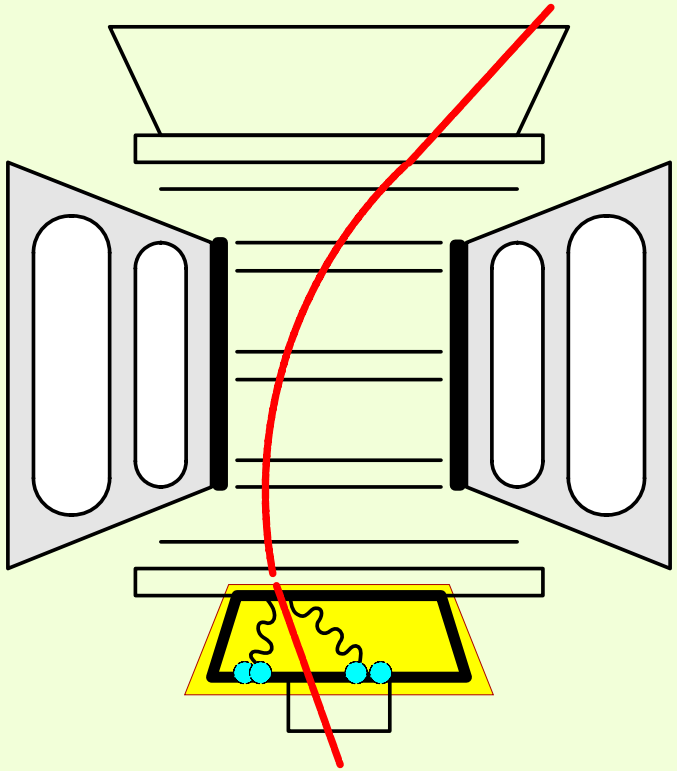

Subdetector Requirements: ECal

- 600 Kg of Pb:Scint. Fiber viewed by 324 4-pixel PMTs
- Sum of dE/dx:
  Total Energy
- Shower shape:
  particle type
  (e, gamma vs pi, p, He,...)
- Very large dynamic range: 60,000
- Fast signal to trigger for high energy gammas

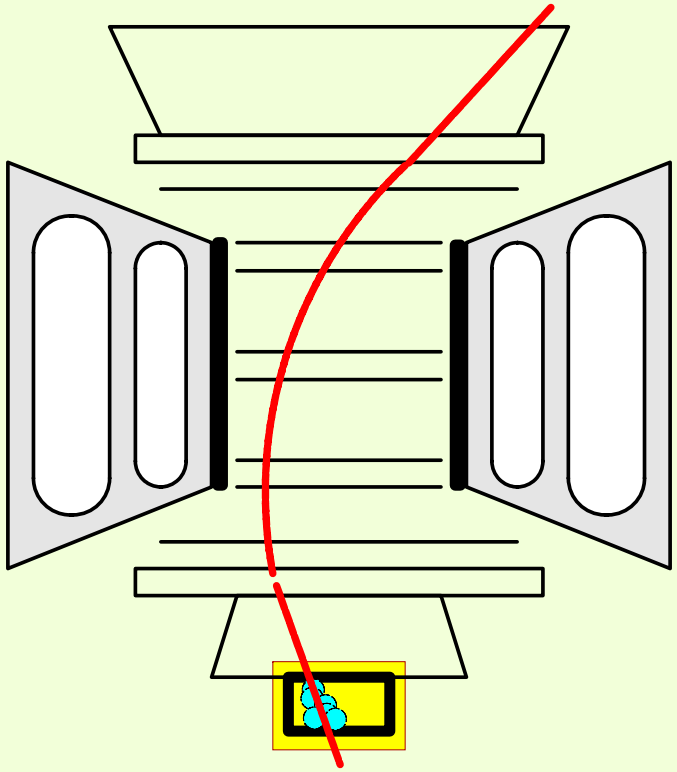

Subdetector Requirements: Summary

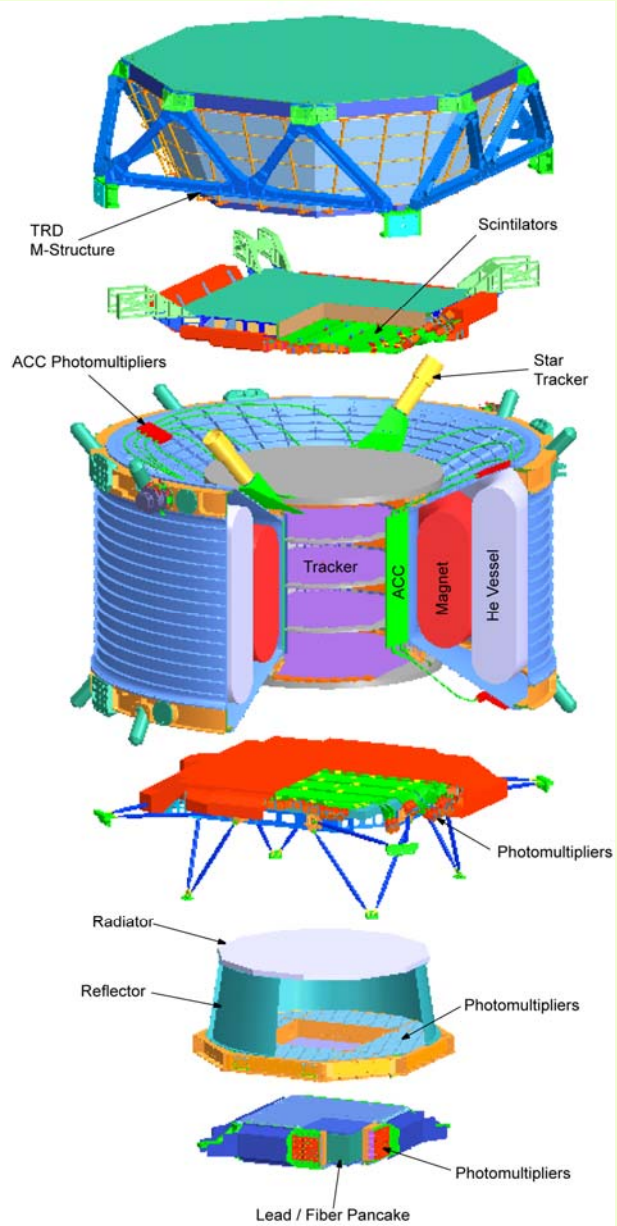

Subdetector	Req'ments	Channels	Raw Kbits
U: TRD	Gas gain	5,248	84
S: ToF+ACC	100 ps	48*4*8	49
T: Tracker	few fC	196,608	3,146
R: RICH	Single g	680*16*2	348
E: ECAL	1:60,000	324*(4*2+1)	47
Σ Raw Kbits/event			3,674
* Event Rate			≤ 2 Khz
= Total Raw Data Rate			~7 Gbit/sec

7 Gbit/sec ™ 2 Mbit/sec

⇒ Restrict Rate & Size

Specify, design, develop, produce:
High Speed, High Capacity,
Low Power, Low Weight, Reliable
Signal & Data Processing
ON ORBIT !

AMS Custom/Common Readout Unit

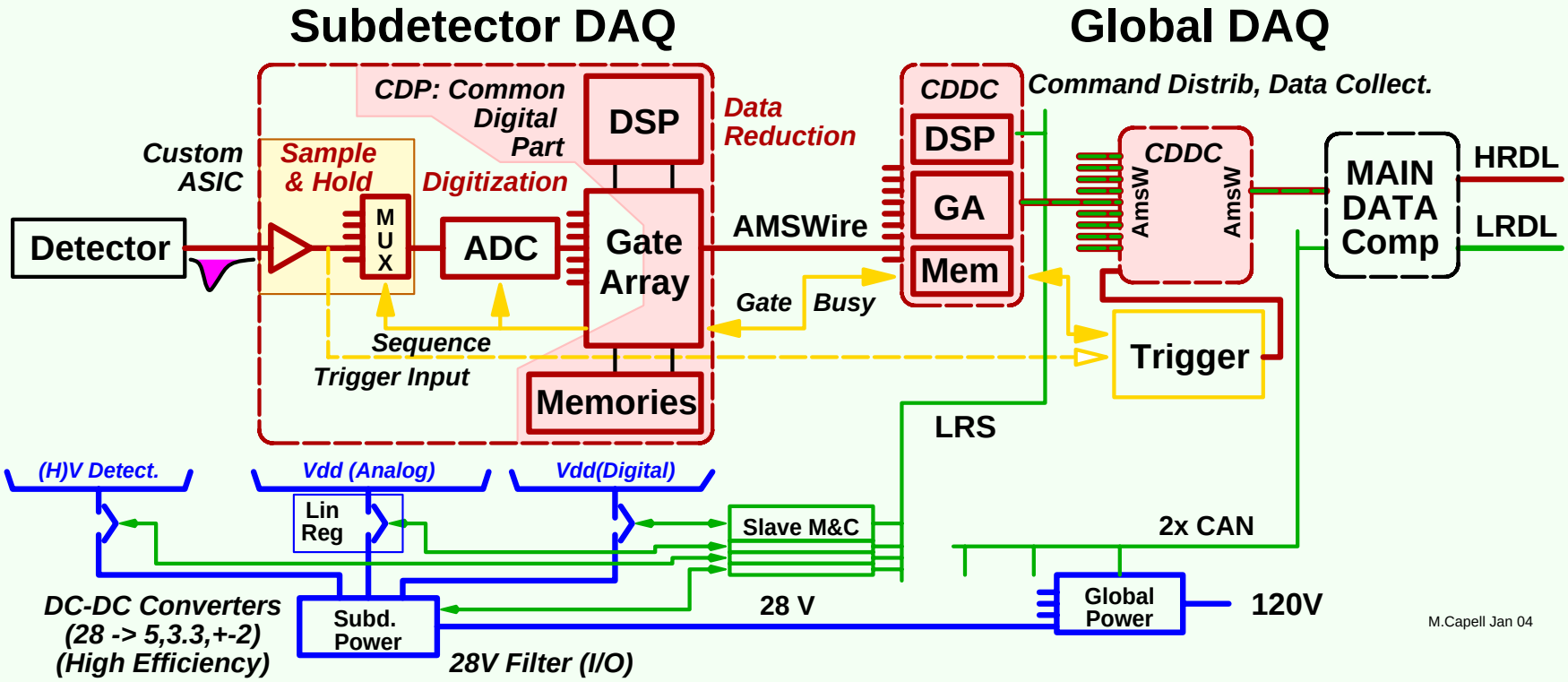

- Cust/Comm power supplies w/high efficiency.
- Cust/Comm monitor & control interfaces.
- Cust/Comm processing unit, software, links.

DSP (ADSP-2187L), Gate Array (Actel A54SX-2A), SRAM (Samsung K6R-016V1C), Flash (AMD Am29LV004), LVDS Tx/Rx (TI SN65LVD-39-), etc.

Fast Electronics for use in Space

AMS-02 Electronics mostly done at 中山科學院 working closely with NASA

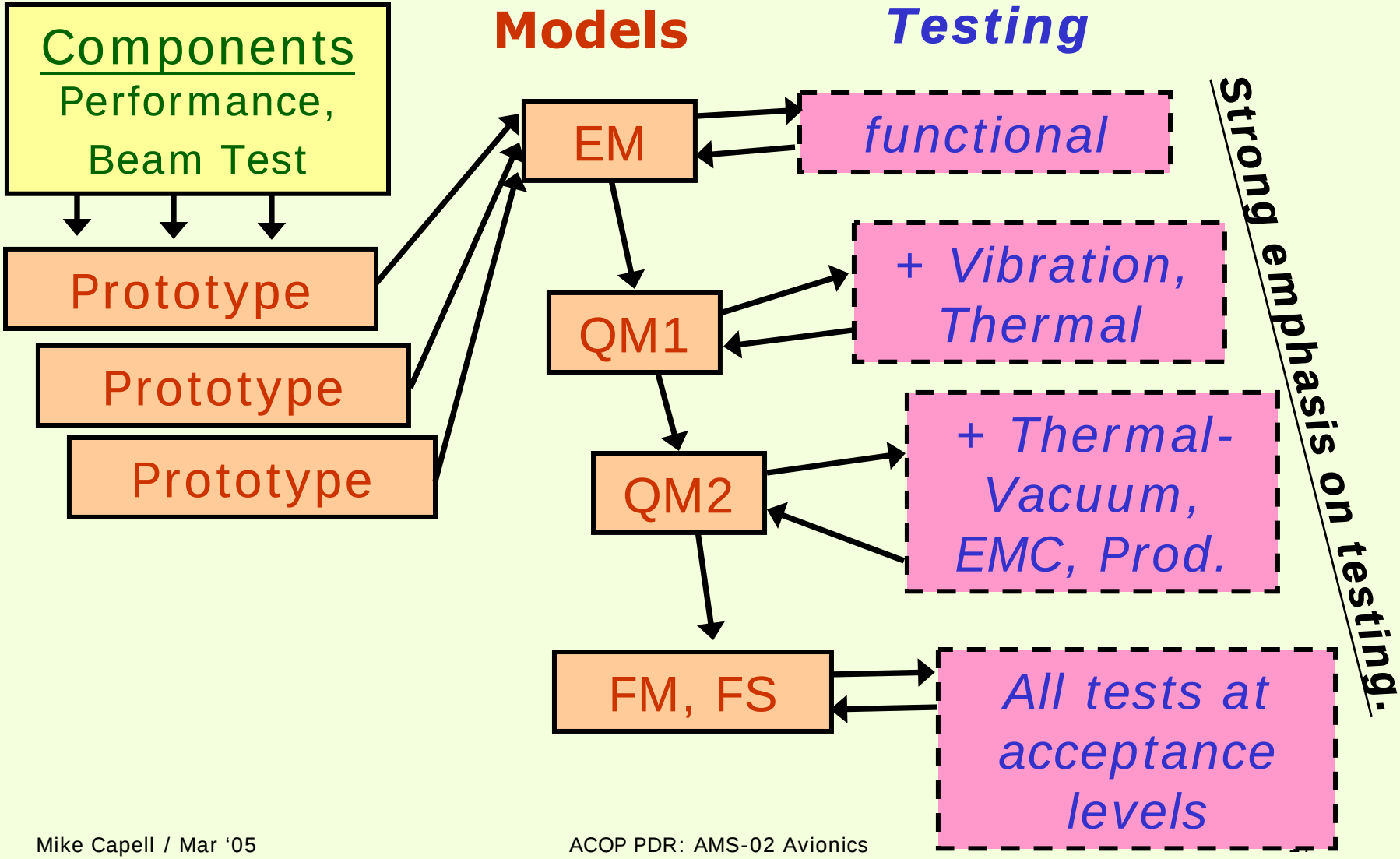

GSI Heavy Ion Beam Test Setup:
Main Computer components

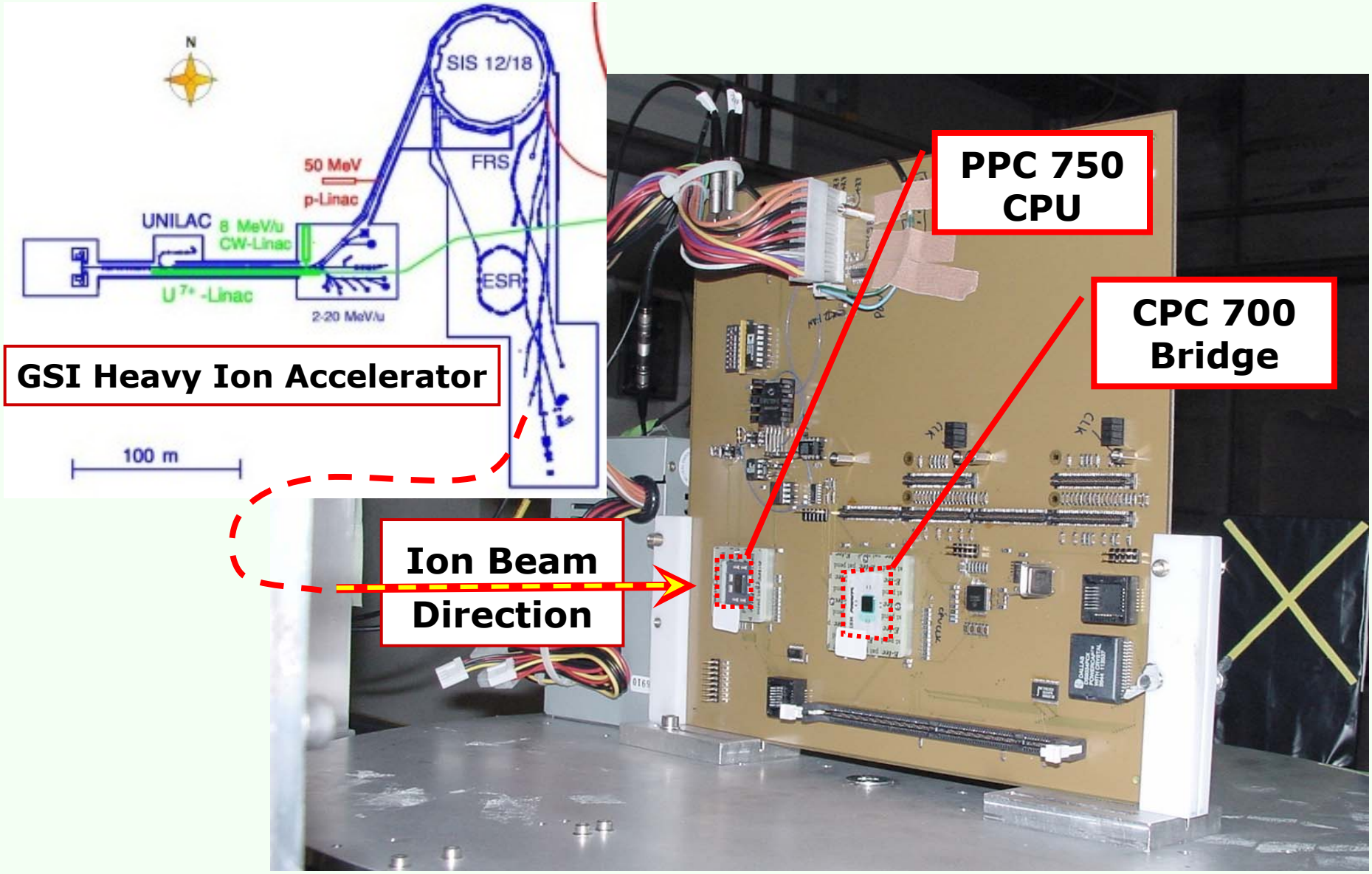

Main Computer System Boards Designed and Implemented by CSIST and NCU, Taiwan

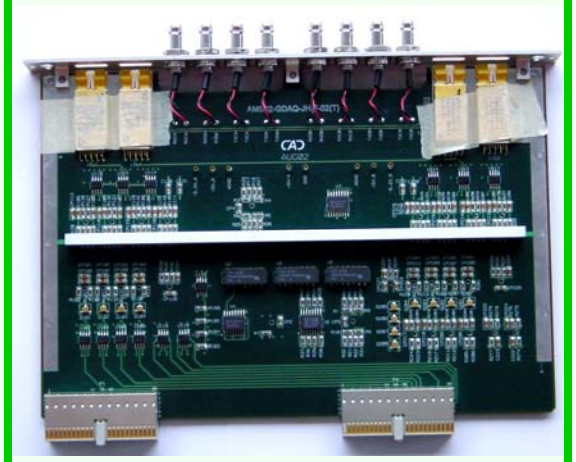

JHIF

JSBC

JIM-CAN

JIM-HRDL

JBU

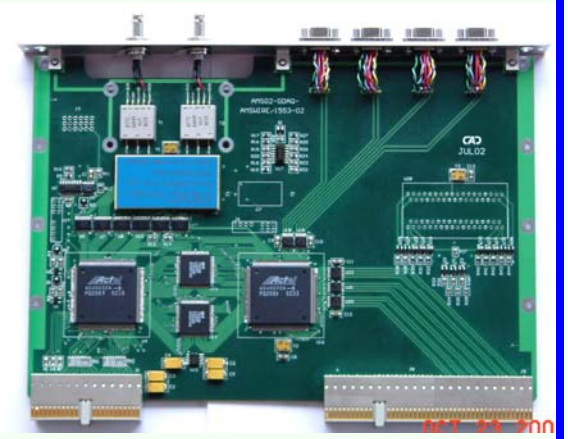

JIM-AMSW&1553

J-Crate Scheme & test setup
4* Main Computer + Interfaces

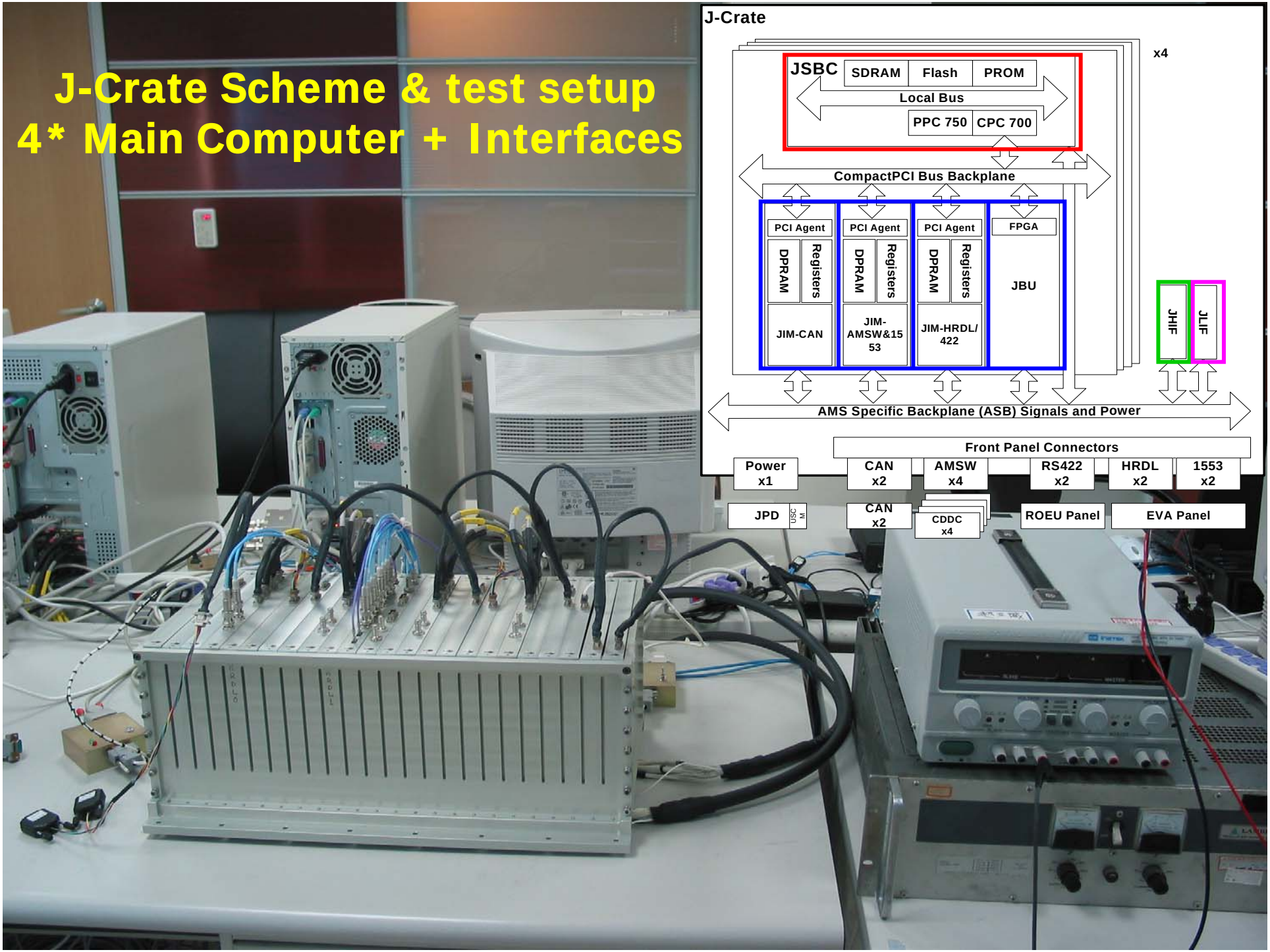

J-Crate in Thermal Chamber

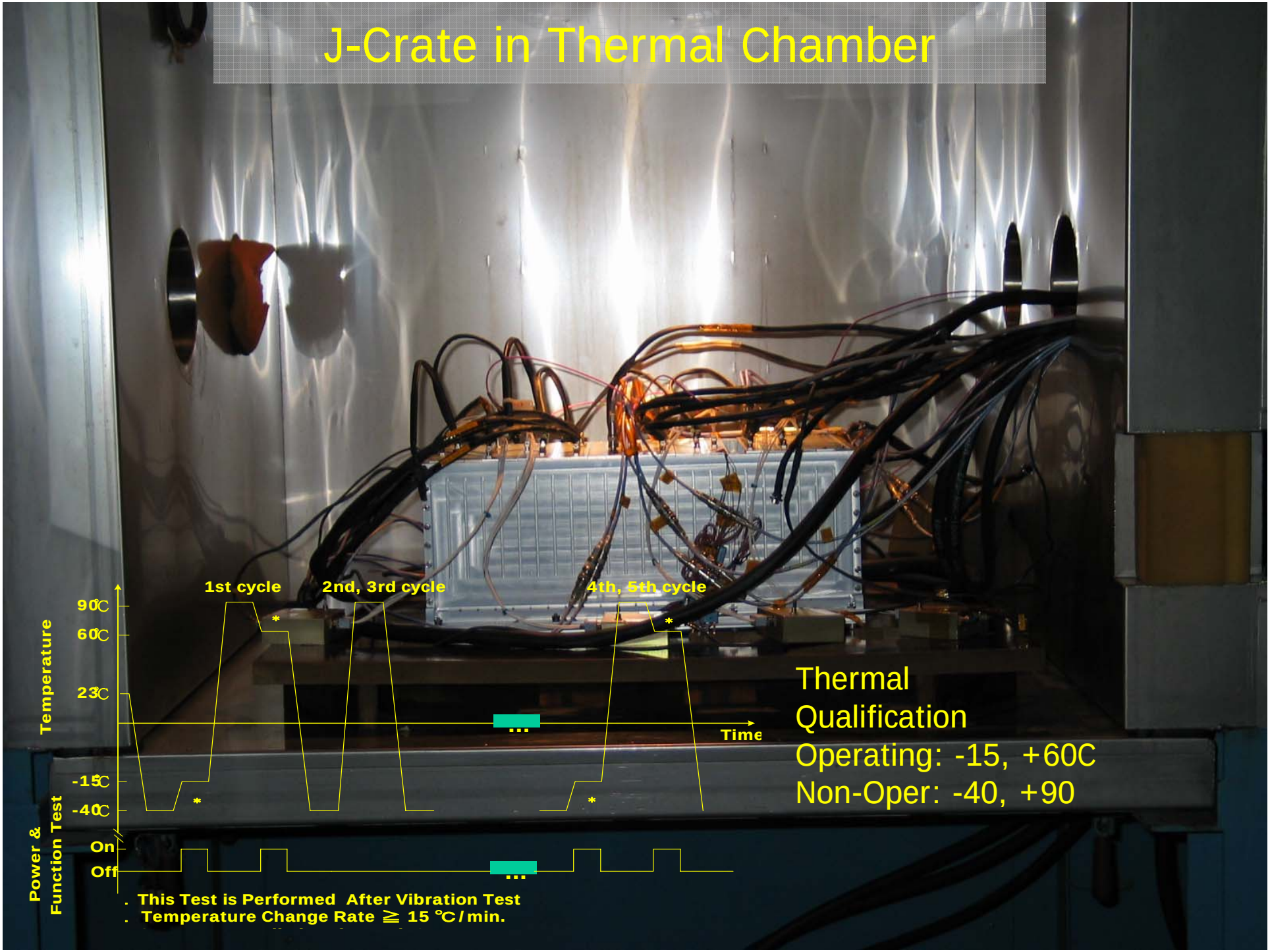

Thermal
Qualification
Operating: -15, +60C
Non-Oper: -40, +90

J-Crate inside EMI Chamber

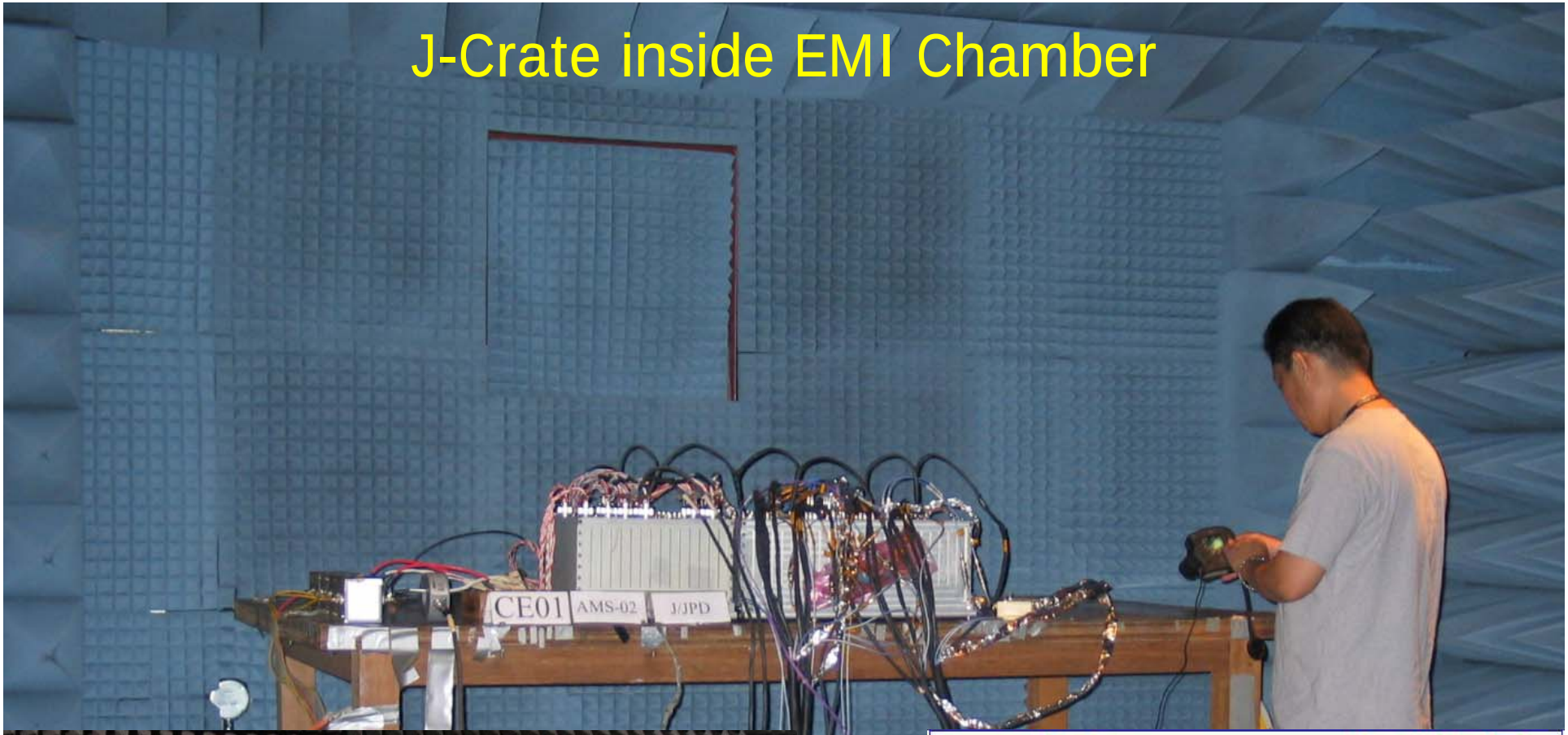

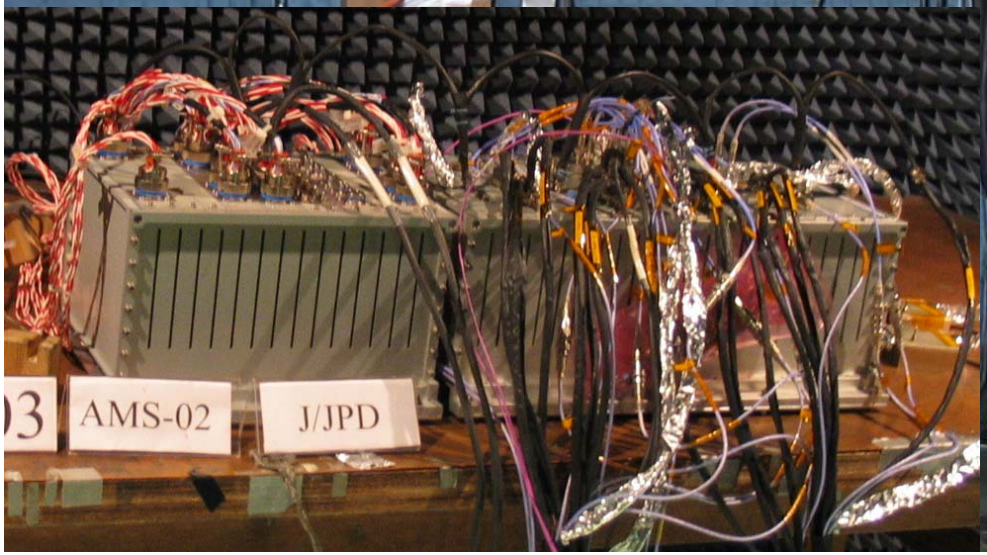

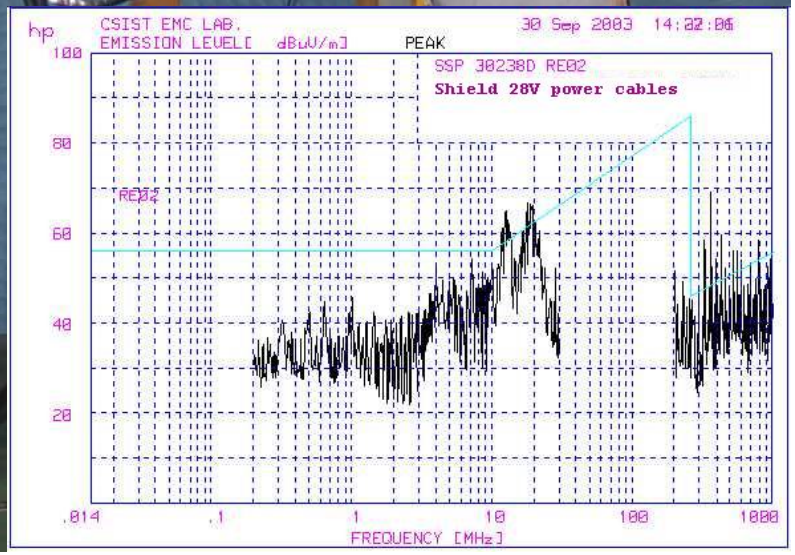

J-Crate in Thermal Vacuum Tests

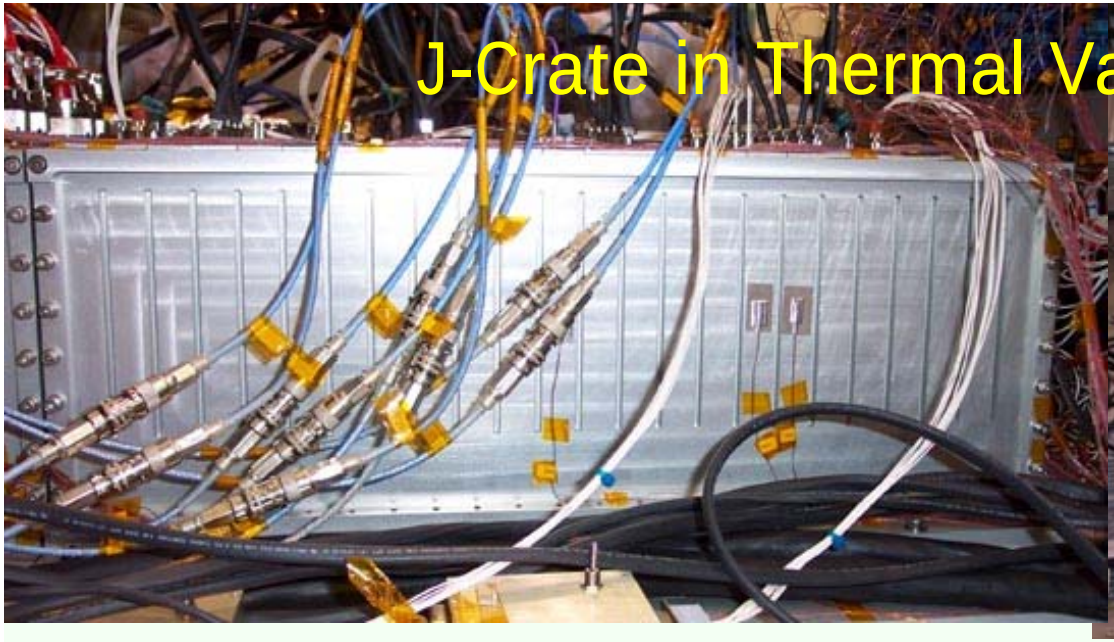

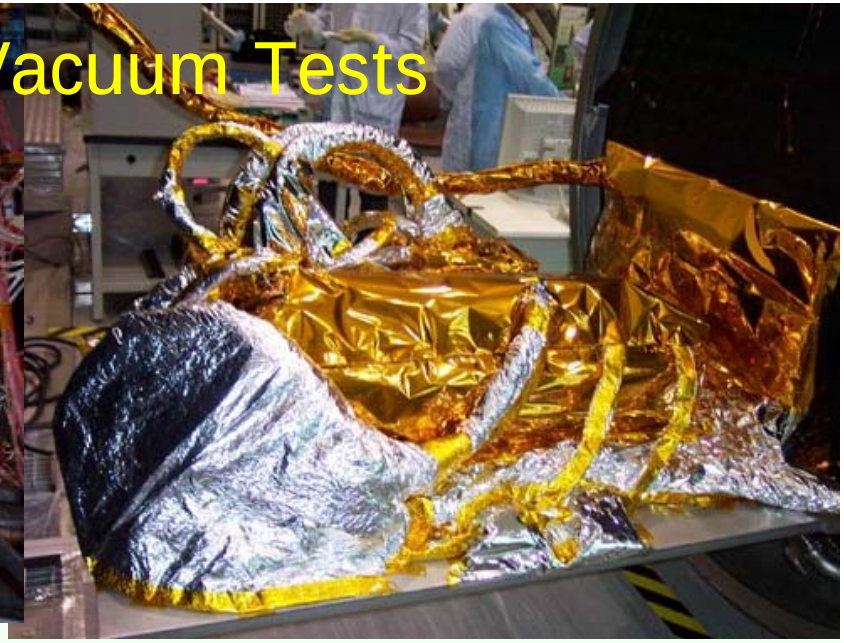

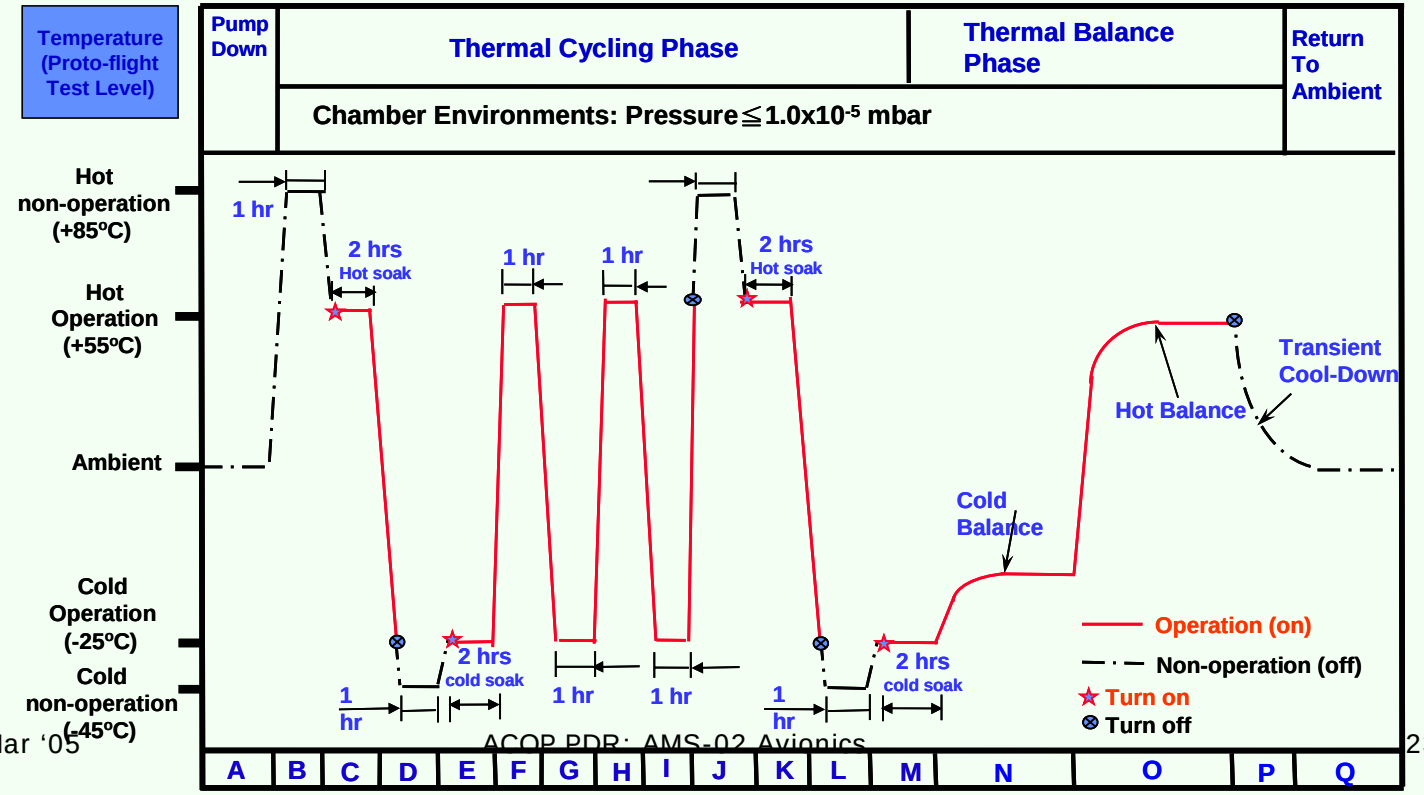

PIT: Preliminary Interface Test - JSC - Jun 2003

Alpha Magnetic Spectrometer
AMS-02
Europe • Asia
North America
Functional Integration Test / January 2005

AMS Electrical Interfaces on ISS w/o ACOP

- Power:
  - 109-124VDC
  - ~2KW
- LRDL
  - 1553B Bus
  - 1 Kbit/s in
  - 10 Kbit/s out
  - 10 B/sec CHD
- HRDL
  - Taxi F/O
  - <2Mbit/s>$_{orbit}$

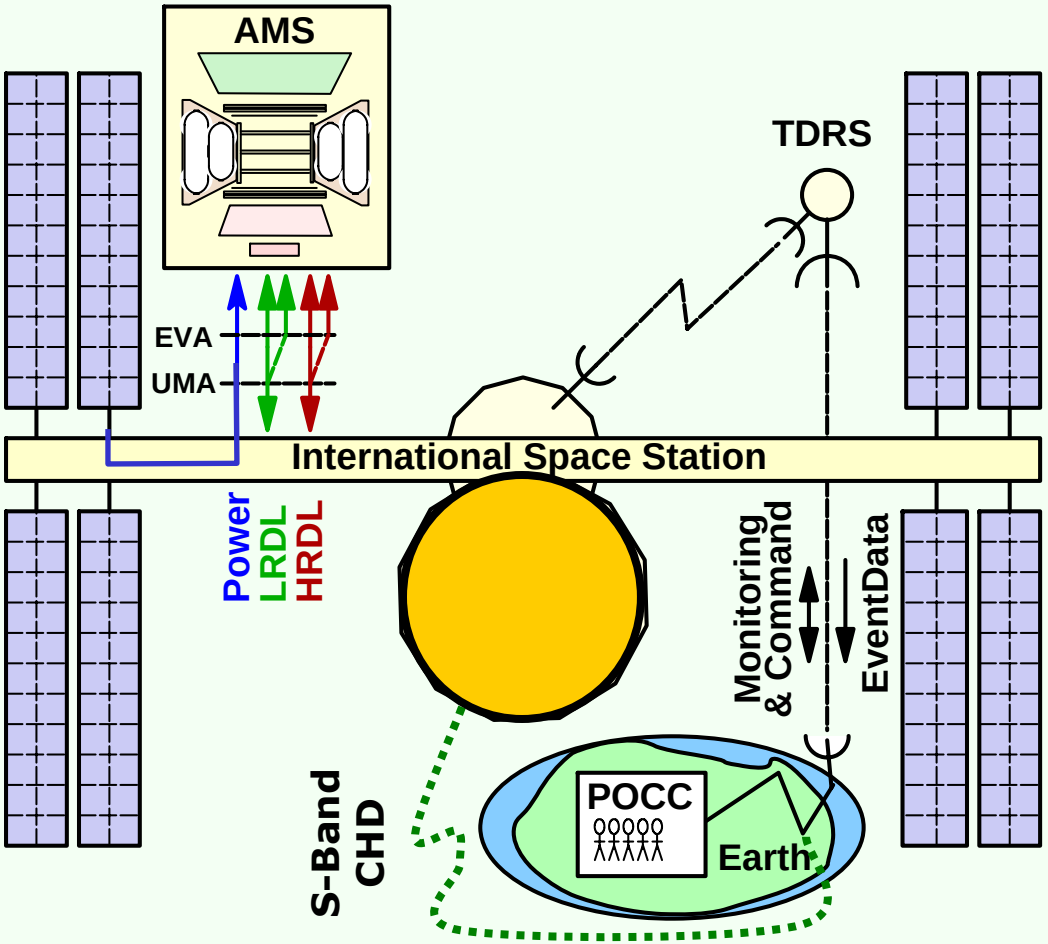

Rate of useful science data unknown.
<2Mb/s> a minimum.

High Rate Data Link Data Flow w/o ACOP

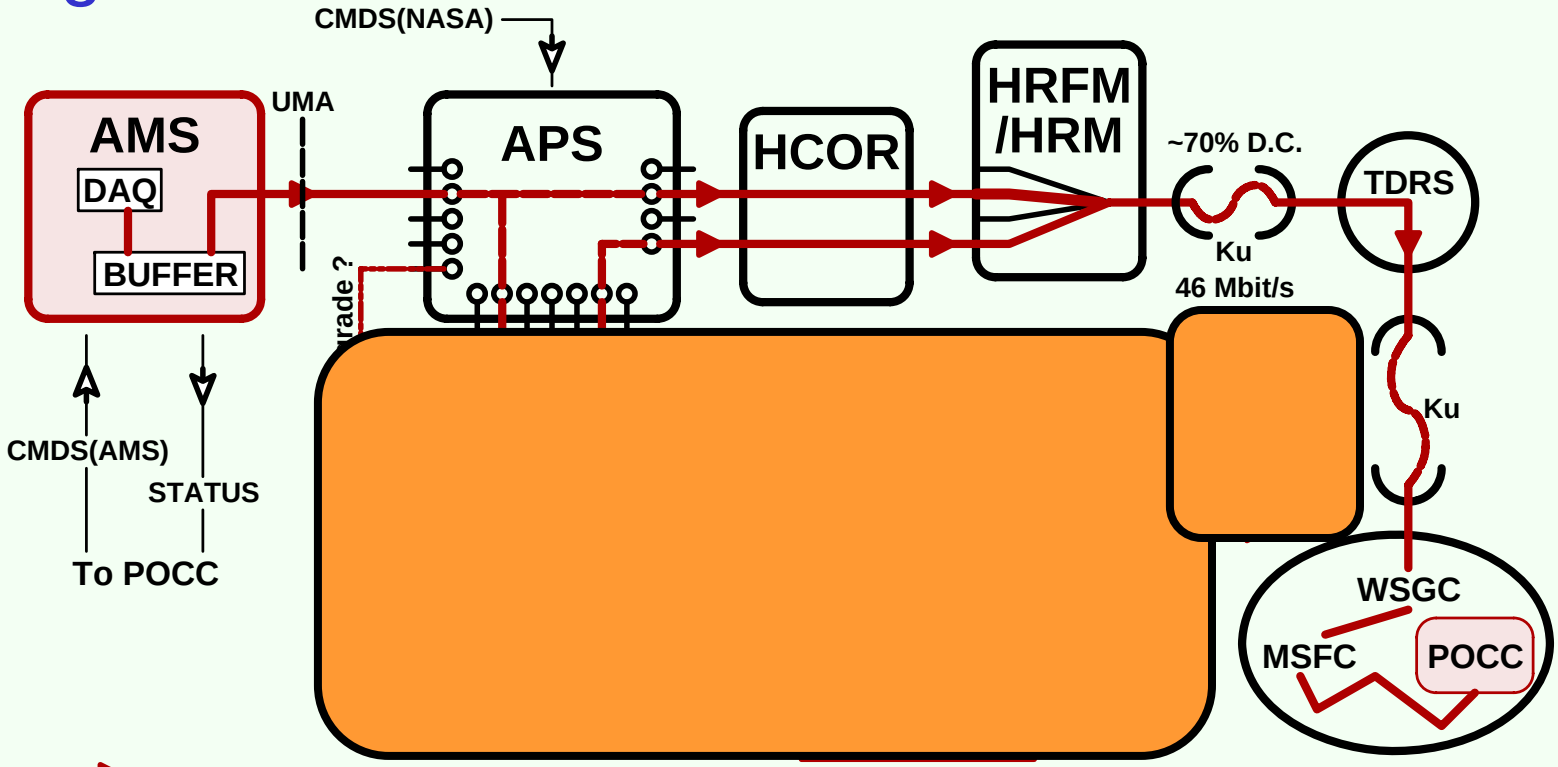

High Rate Fiber Optic Line
(0, 0.5 to 100 Mbit/sec on Cmd)

AMS Alpha Magnetic Spectrometer Payload
ACOP AMS Crew Operations Post (in Express Rack Drawer)
POCC Payload Operations Control Center

NASA
- **APS** Automated Payload Switch (1 of 2, each 20 programable interconnects, but only 4 outputs to HCOR)
- **HCOR** Highrate Com. Outage Recorder
- **HRFM** High Rate Frame Multiplexer
- **HRM** High Rate Modem
- **ISPR** International Standard Payload Rack (Containing Express Rack)

M.Capell/Oct 00

AMS-02 HRDL Interface

- Zero Fault Tolerant for Payloads

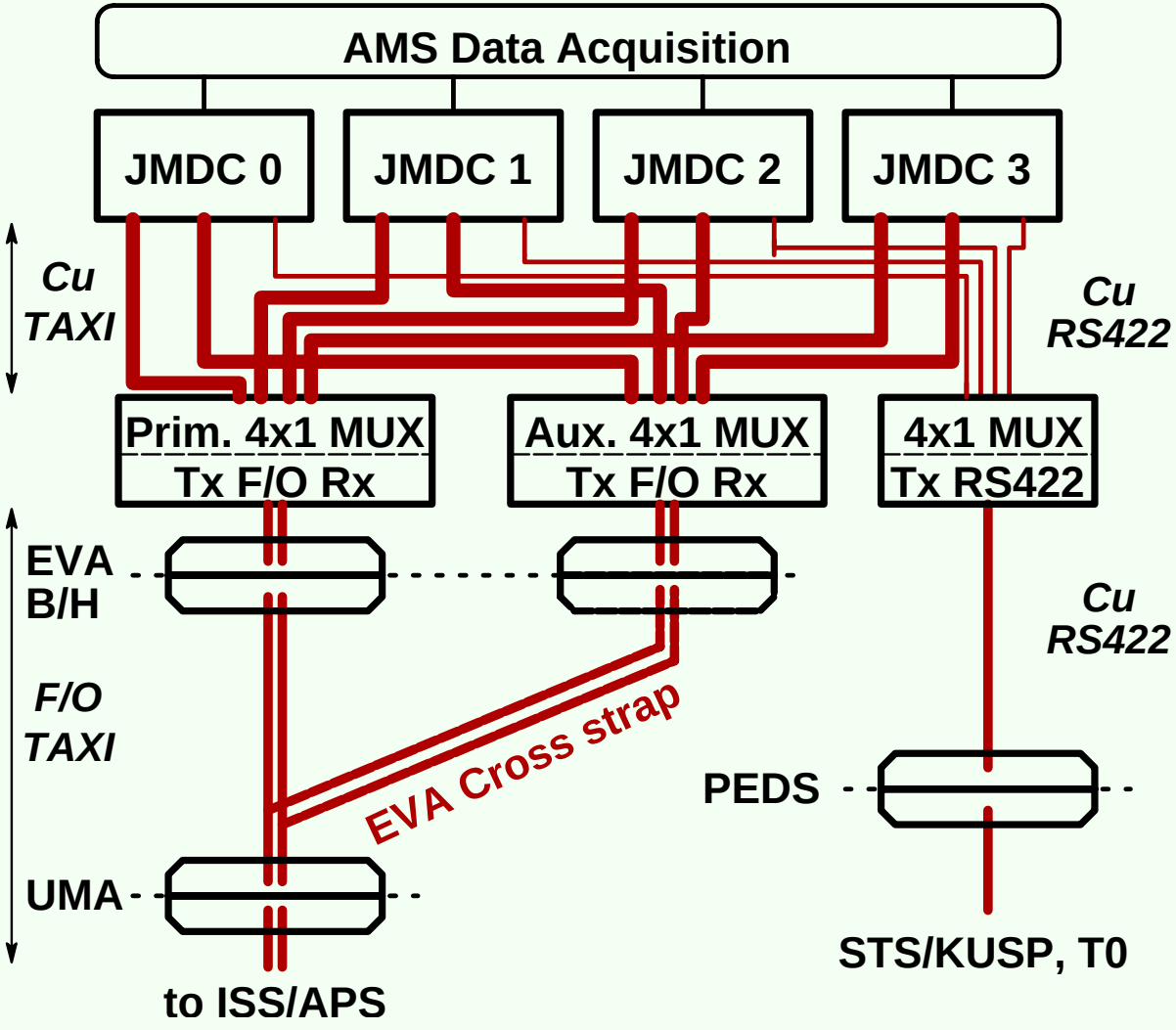

HRDL Data Flow – not

- NASA ISS HRDL boxes
  (APS, HCOR, HRFM, HRM) – “flakey”
- Total capacity oversubscribed -
  46 Mbit/sec net * “70%” Duty Cycle.

➢ ISS HRDL may not meet design -
  INSufficient bandwidth for everyone

- On AMS-01, the equivalent system
  failed completely (“first time ever”).

AMS needs on board recorder: ACOP

High Rate Data Link Data Flow

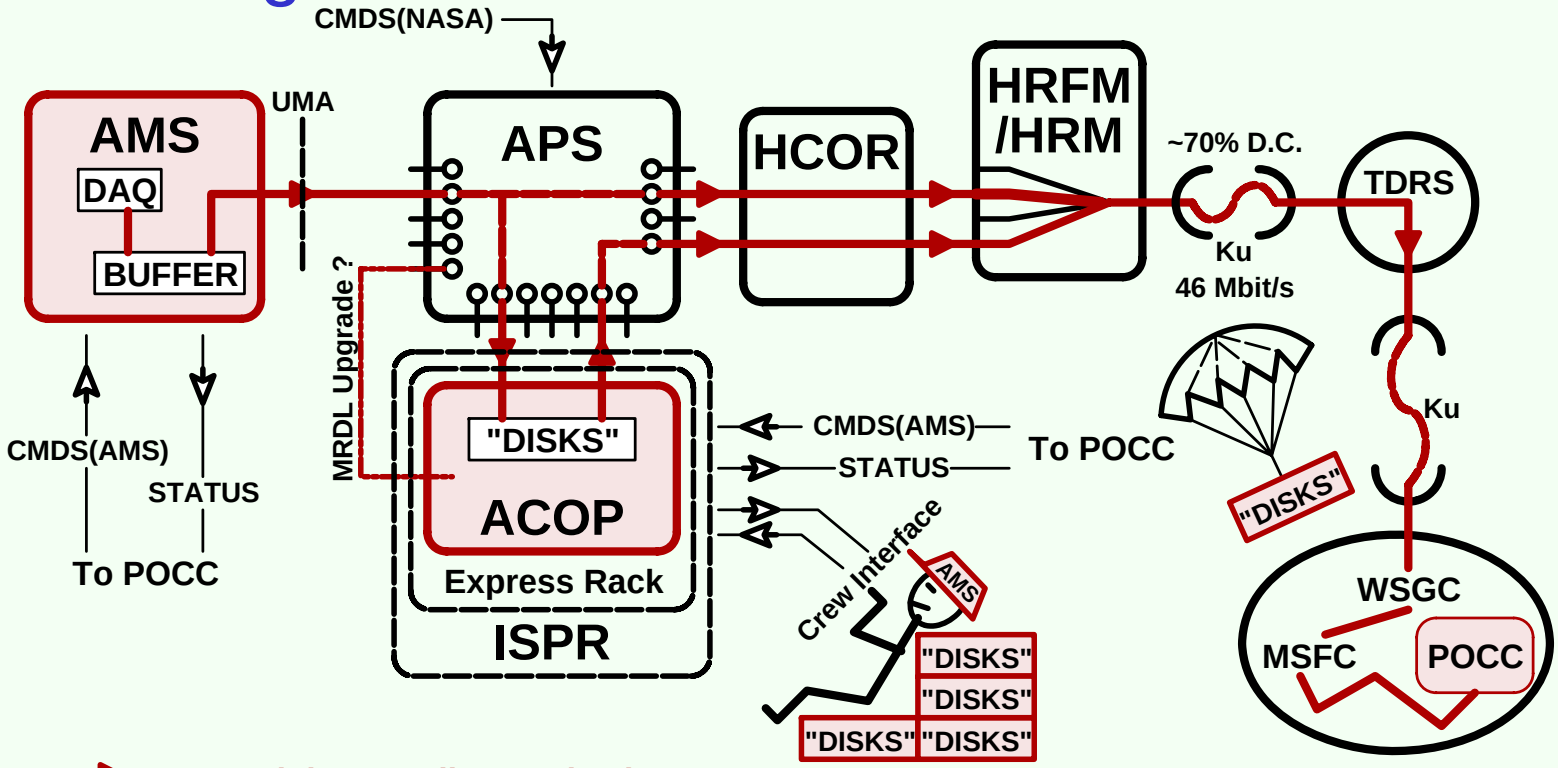

High Rate Fiber Optic Line
(0, 0.5 to 100 Mbit/sec on Cmd)

AMS Alpha Magnetic Spectrometer Payload
ACOP AMS Crew Operations Post (in Express Rack Drawer)
POCC Payload Operations Control Center

NASA
- **APS** Automated Payload Switch (1 of 2, each 20 programable interconnects, but only 4 outputs to HCOR)
- **HCOR** Highrate Com. Outage Recorder
- **HRFM** High Rate Frame Multiplexer
- **HRM** High Rate Modem
- **ISPR** International Standard Payload Rack (Containing Express Rack)

M.Capell/Oct 00

AMS Crew Operations Post (ACOP)

- Computer based with data recording on hard drives located “inside” ISS.
  - Capacity: 21+ days “hands free”,
    - ~ 4+ months with disk swaps.
- Recorded data forms an ARCHIVE.
  - Can be downlinked when HRDL/Ku available or downshipped if not.
  - **Anyway, it is safely written down**.
- ACOP can also provide:
  - Dedicated, flexible Crew monitoring post
  - Crew command post
  - Alternate command path to AMS
    - (only way to load large files on orbit)

ACOP Avionics

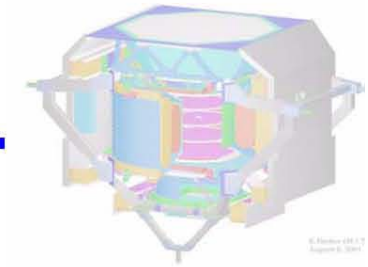

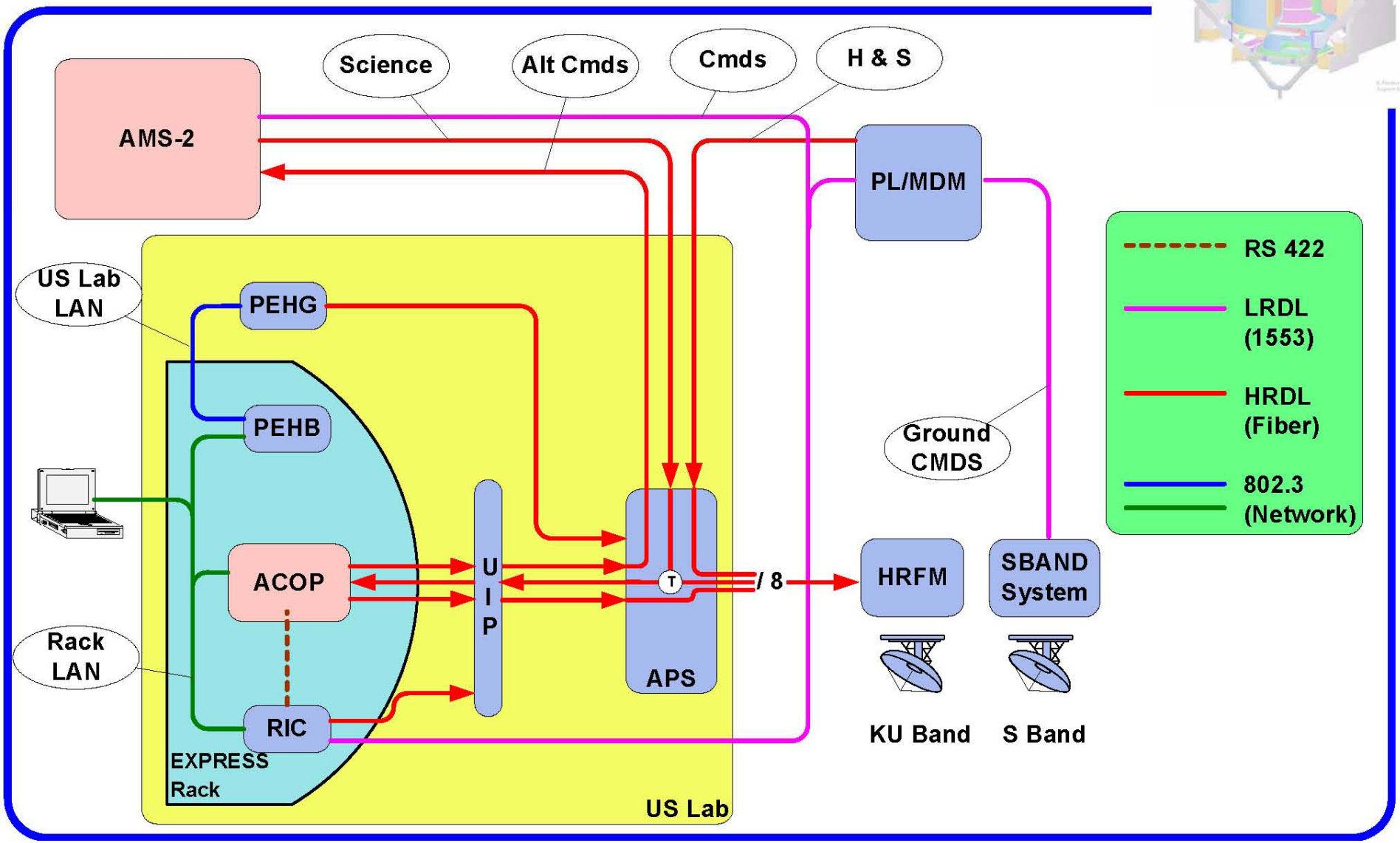
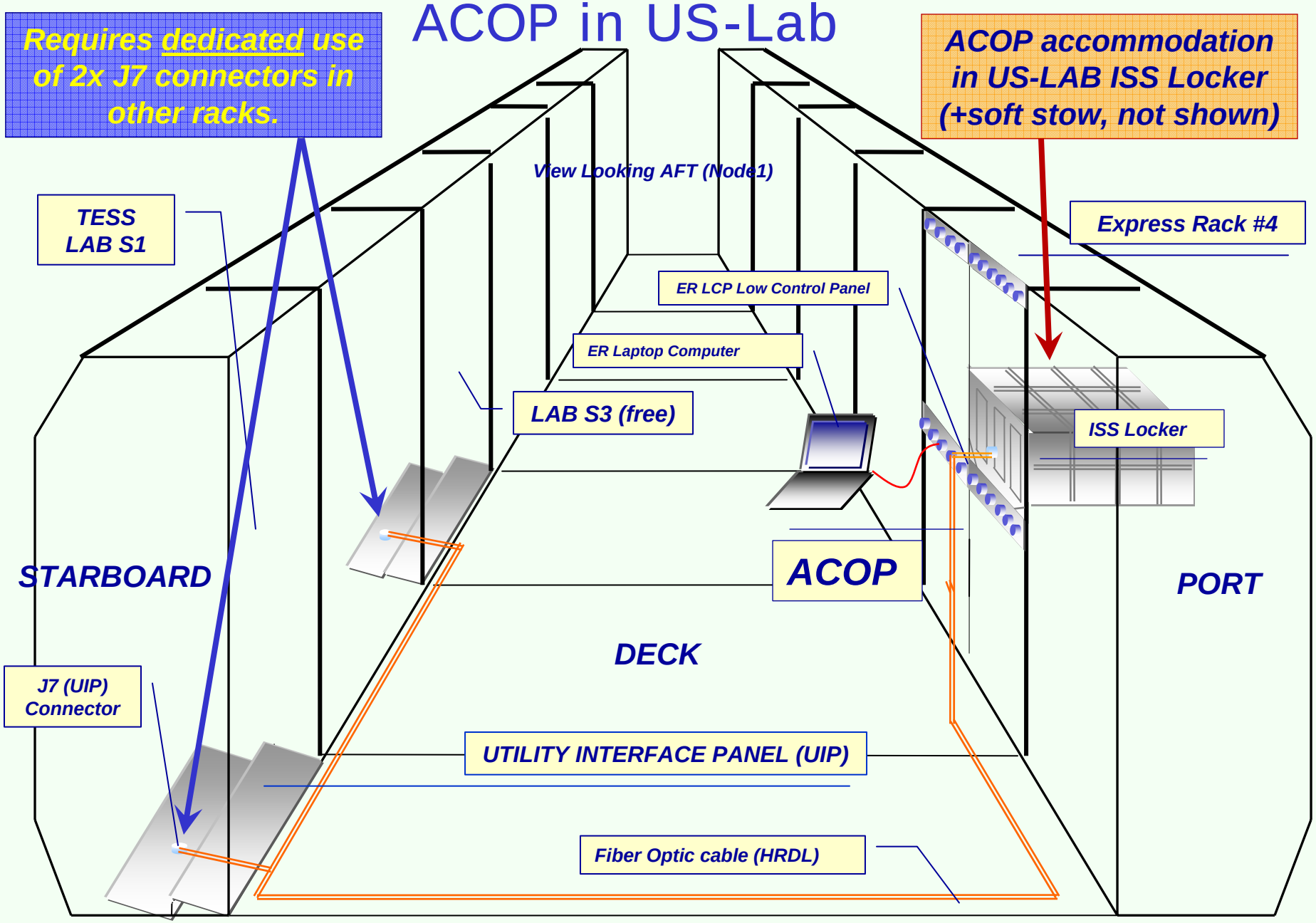
ACOP in US-Lab