AMS-02 ACOP PDR
Electrical Design

Wei-Ping Yang

Chung Shan Institute of Science and Technology (CSIST)

Mar.10-12, 2005

Outline

- **ACOP Avionics Interface**
- **ACOP Electrical Hardware Design**
- **ACOP Development Plan**

Command & Data Handling (C&DH) of the ACOP and AMS-02

RIC *Rack Interface Controller*
PEHB *Payload Ethernet Hub Bridge*
PEHG *Payload Ether Hub Gateway*
UIP *Utility Interface panel*
APS *Automated Payload Switch*
HRFM *High Rate Frame Multiplexer*

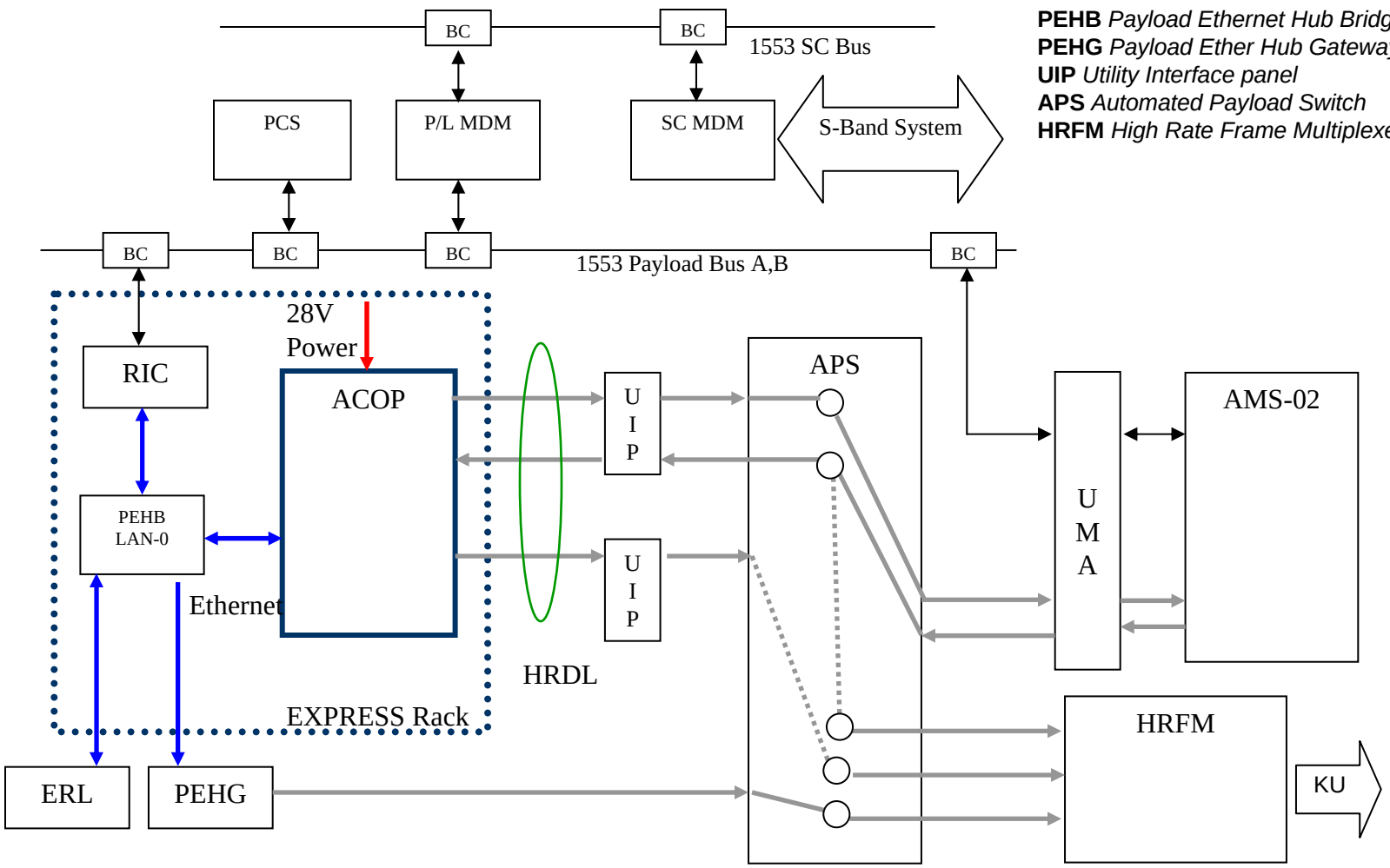

ACOP Avionics Interfaces

- **Power Interfaces**
  - **ACOP power request is < 200Watt**
  - **24Vdc to 32Vdc (nominal 28Vdc) input voltage from the power cable**
- **Data and Commands Interfaces**
  - **The Ethernet interfaces will provide EXPRESS rack protocol to communicate to the RIC**
  - **HRDL connections are used for a AMS-02 to ACOP private payload network to support the complex data management required and used to downlink AMS-02 telemetry data.**
- **Crew Interfaces**
  - **LCD Display**
  - **Four Momentary Push Buttons**
  - **One Circuit Breaker On/Off Switch**
  - **Hard Drive exchange caddies**
- **Miscellaneous Interface**
  - **A RS-422 serial interface will be available on the ACOP-SBC Card front Panel for ground tests**
  - **USB 1.1 interfaces will be used by crew in non-nominal scenarios (SW patches) to connect portable devices (USB keys).**

ACOP Avionics Interfaces and Grounding Philosophy

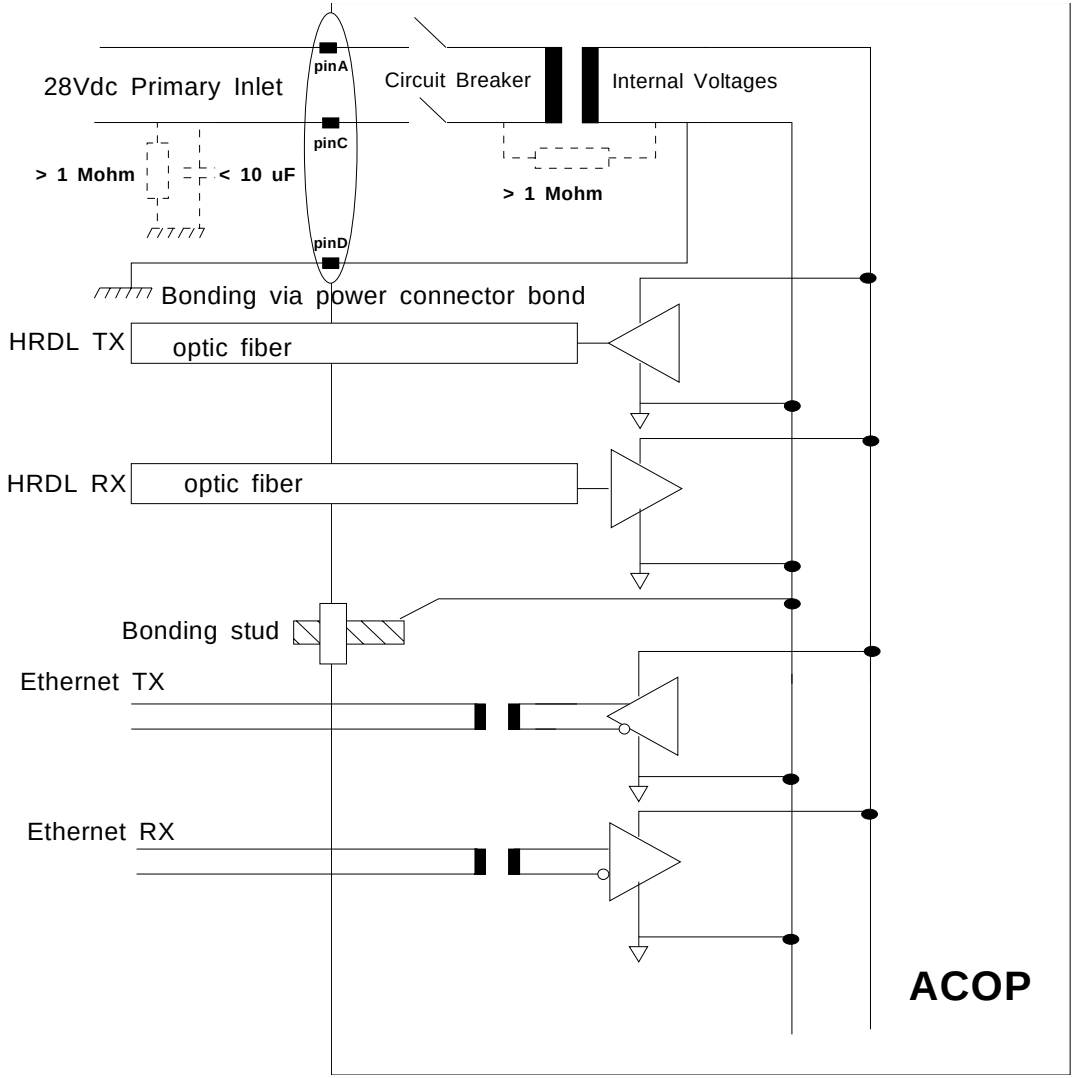

Mechanical Design of ACOP Card Cage Assembly

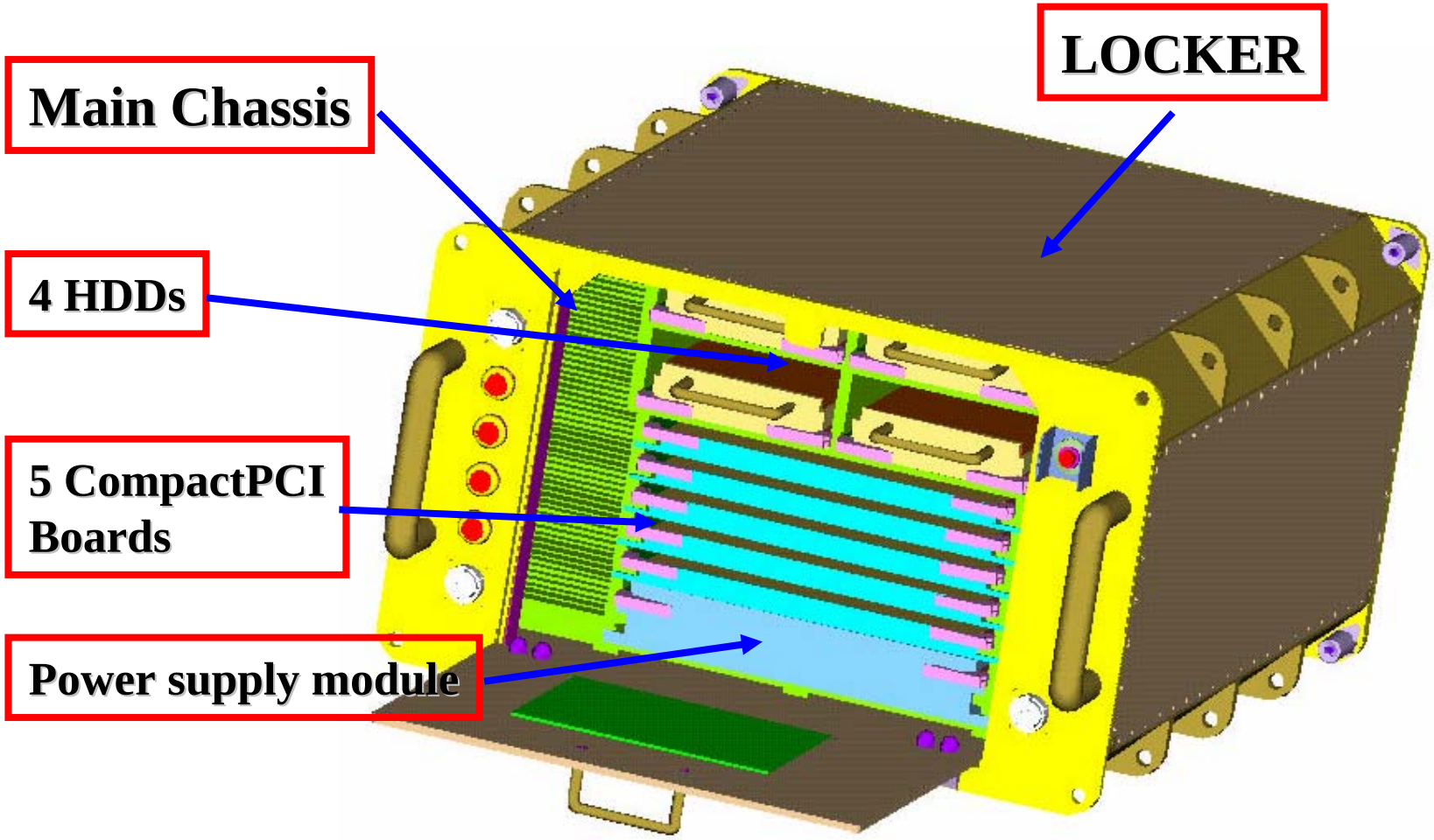

ACOP Electrical Block Diagram

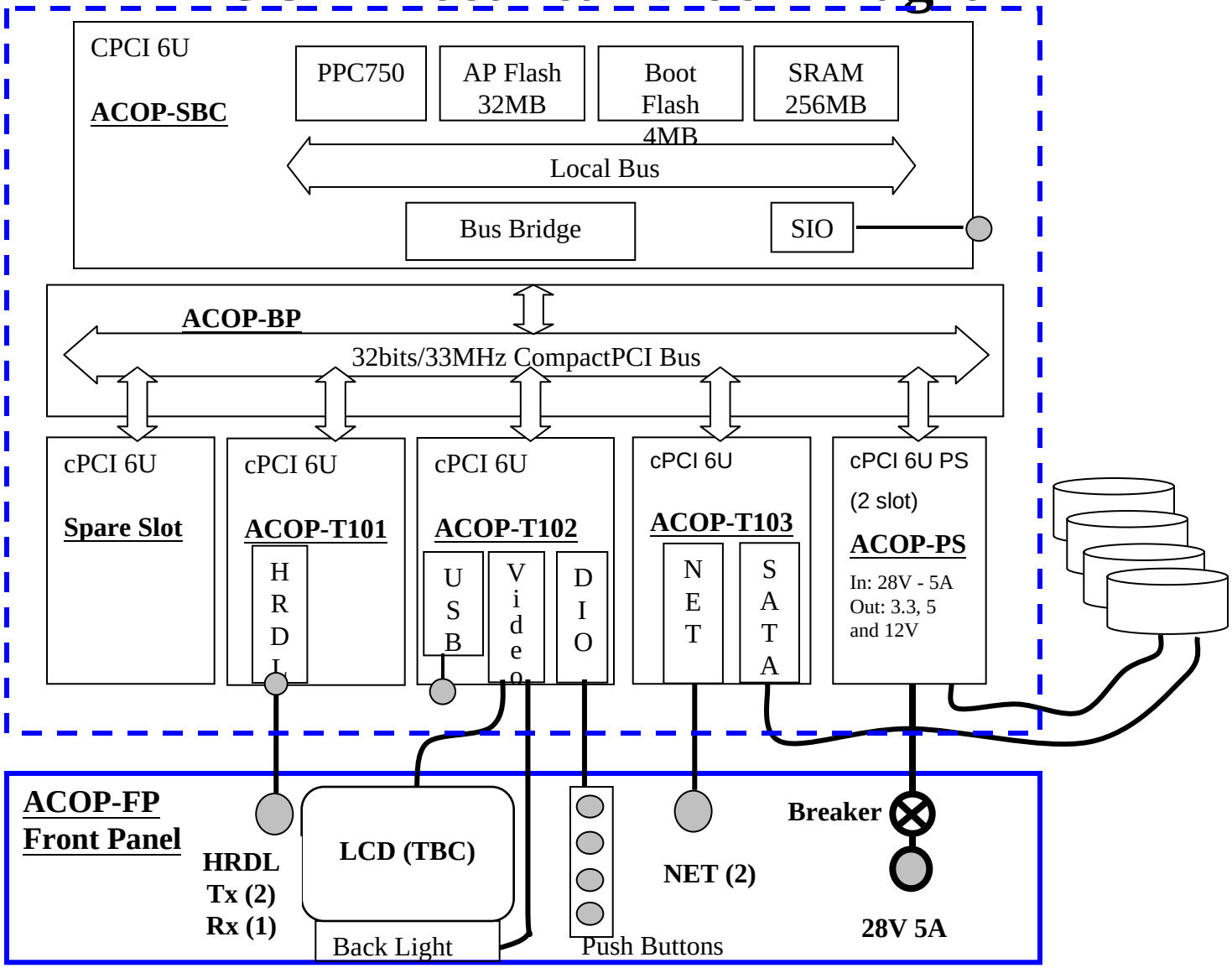

ACOP Main Chassis

- **ACOP-SBC: Single board computer, based on the IBM PPC 750 as well as standard CompactPCI bus interfaces and acts as CompactPCI system slot.**
- **ACOP-T101: Provides 2 fiber optic TX and 1 fiber optic RX interfaces.**
- **ACOP-T102: Provides video output interface, 2 USB 1.1 interfaces and a DIO interface.**
- **ACOP-T103: Provides 2 Ethernet ports and 4 SATA ports.**
- **Spare Slot: for future expansion purpose**
- **ACOP-PS: Double height power supply.**
- **4 hot swappable HDD (Hard Disk Drive)**
- **Optional Fan Module**

Electrical Parts in ACOP Front Panel

- Four Momentary Push Buttons
- One Circuit Breaker with On/Off Switch
- One HRDL Connector with fiber optics
- One MRDL Connector with 10/100 base Ethernet
- One Power Connector
- One LCD screen with backlight inverter

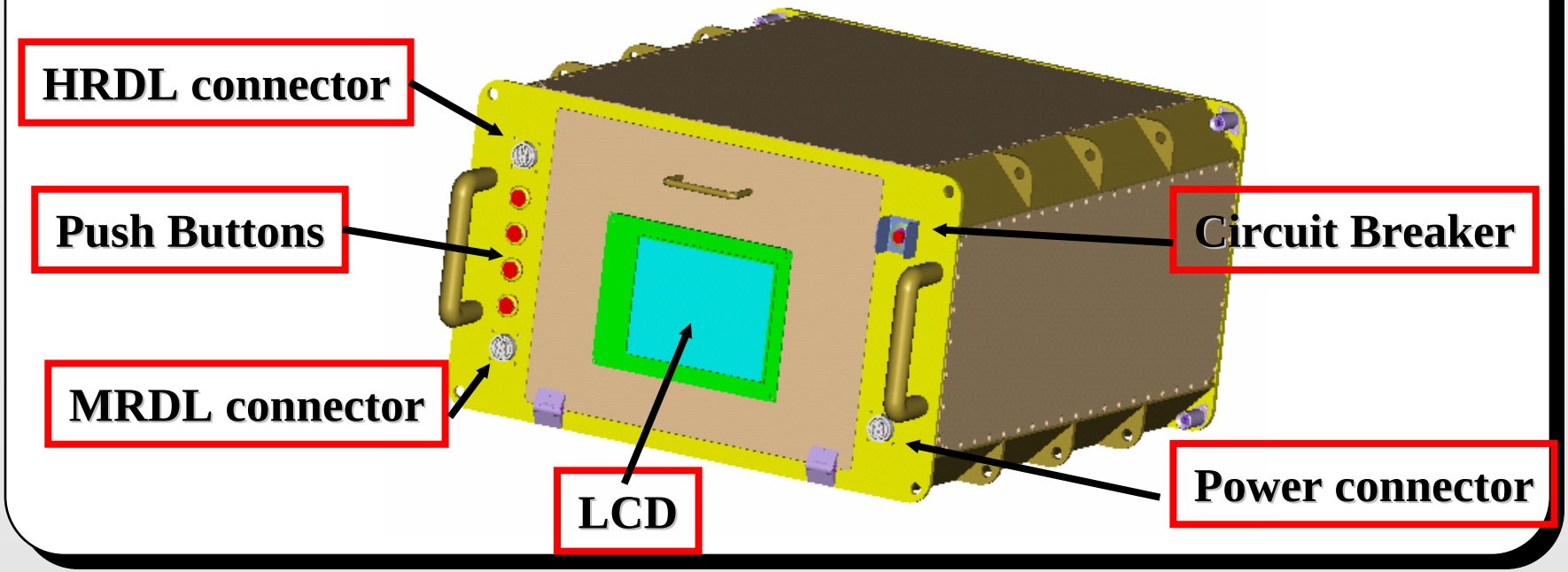

ACOP-SBC

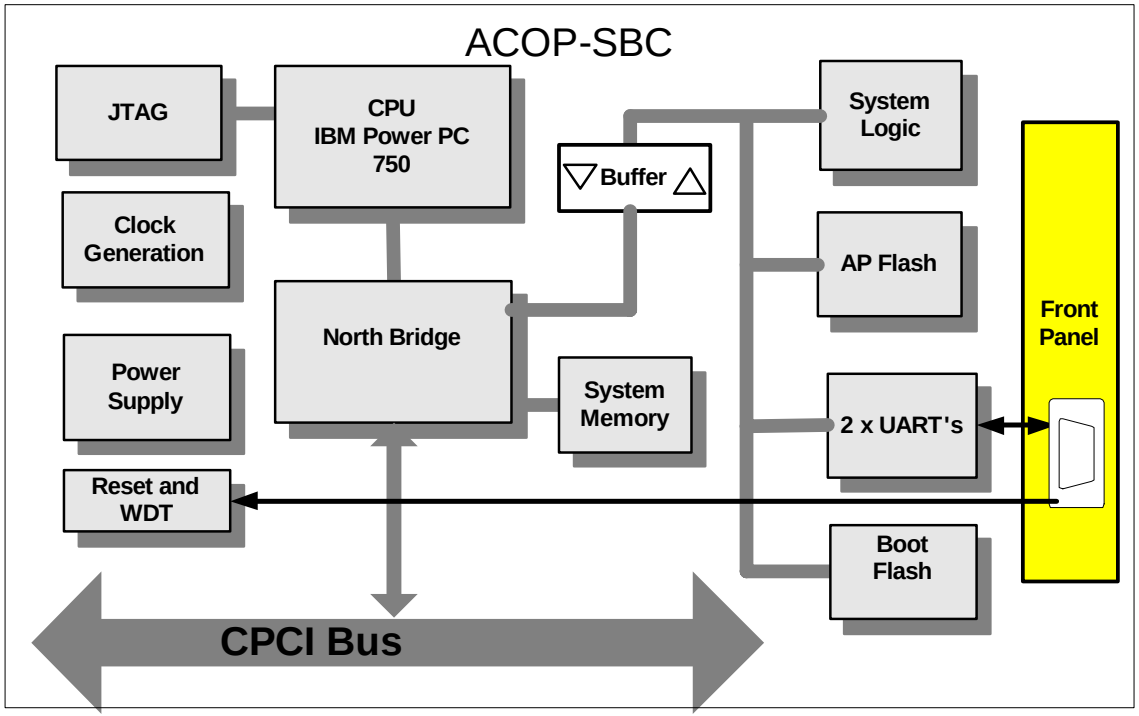

- **Microprocessor: IBM PowerPC750 running at 400 MHz, with Cache**
- **CPU to PCI Bridge: IBM CPC700**
- **Main Memory: 256Mbyte Synchronous DRAM**
- **On-board Flash Memory: 32Mbyte (8M x 32) AP Flash, 512Kbyte Boot Flash**
- **Dual serial interface ports: 16552D (16550A compatible) with RS422 Interface**
- **General Purpose Registers**
- **Reset generation and power monitor**
- **Thermal sensor input**

ACOP-T101

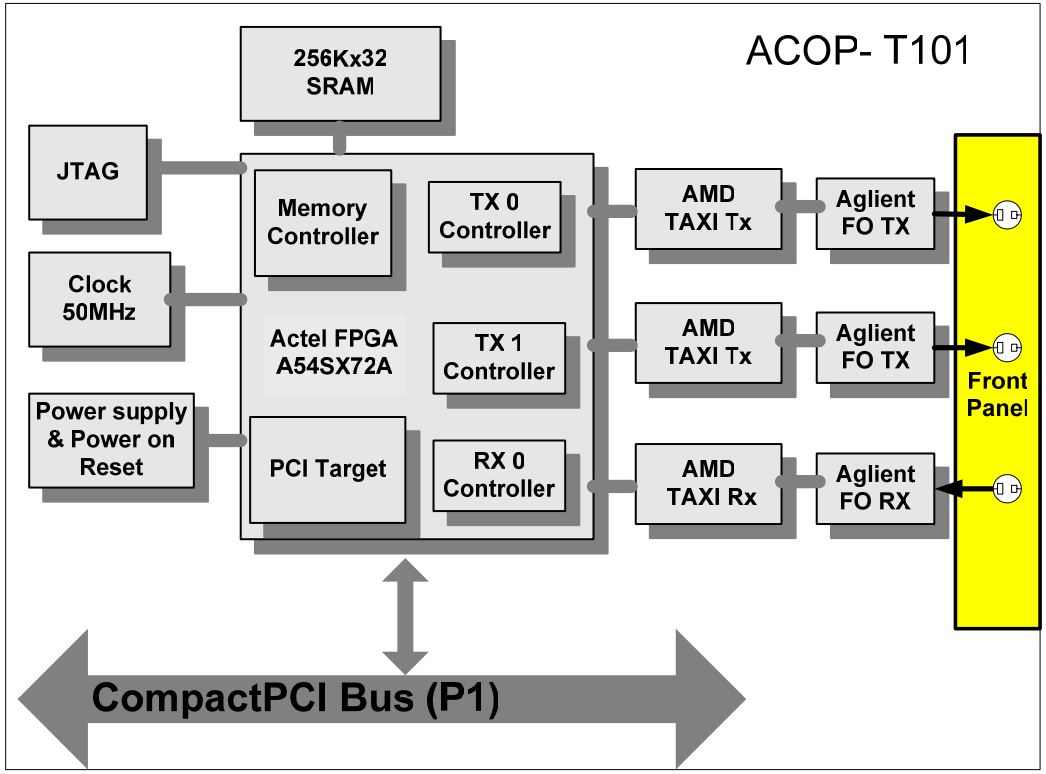

- Two transmit and one receive fiber optic interfaces meeting the ISS HRDL CCSDS packet mode standards
- AMD TAXIchips (Transparent Asynchronous Xmitter-Receiver Interface), signaling rate at 125Mbaud
- Raw data is received into and transmitted out of a buffer memory of 1MB contained on board.
- Capable to transmit or receive frame from 1 to 4096 bytes length
- 32bits/33Mhz CompactPCI peripheral slot, PICMG 2.0 compliant

ACOP-T102

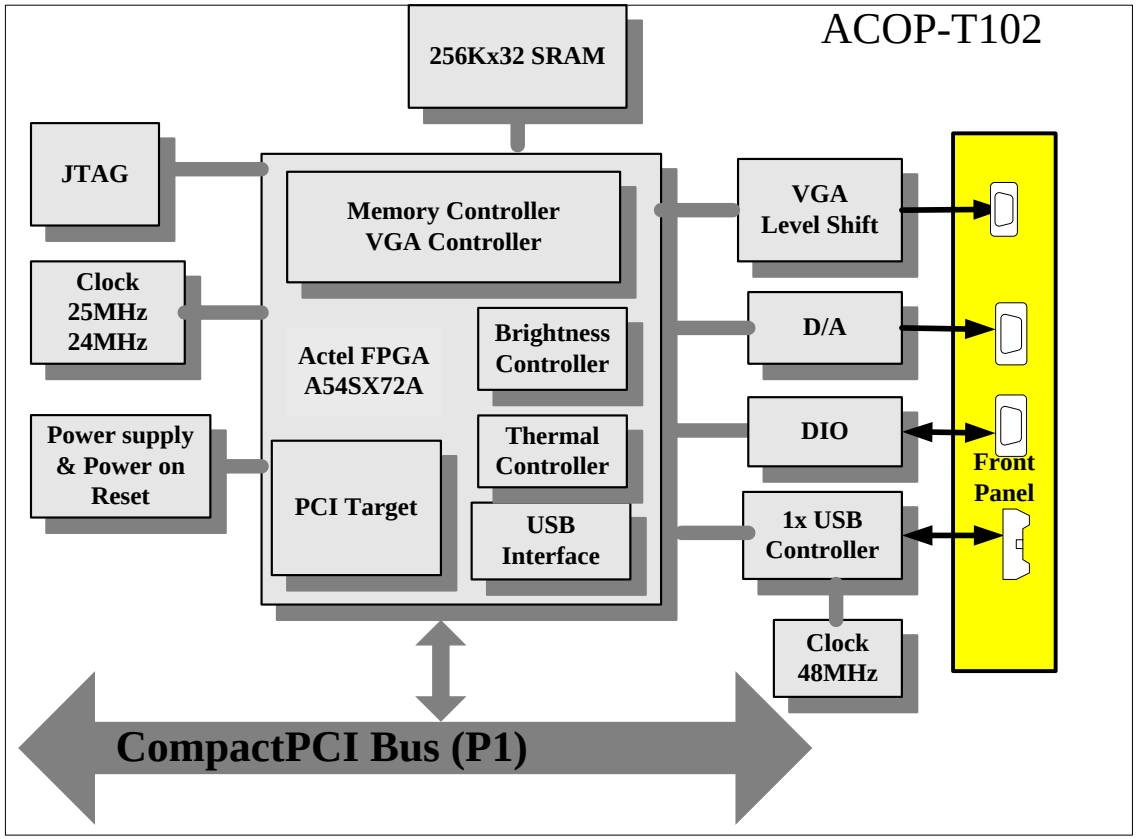

- **LCD Graphic Function: Resolutions: 640x480**

  Color: 5 bits for R, G, B.

  Video frequency: 25MHz
- **Video SRAM: 256K x 32bit**
- **D/A converter with analog output to adjust the brightness of the LCD backlight**
- **USB interface: Supports USB Specification 1.1 (1.5Mb/s) devices**
- **Discrete IO function**

  Thermal sensors network controller

  Push button input
- **32bits/33Mhz CompactPCI peripheral slot, PICMG 2.0 compliant**

ACOP-T103

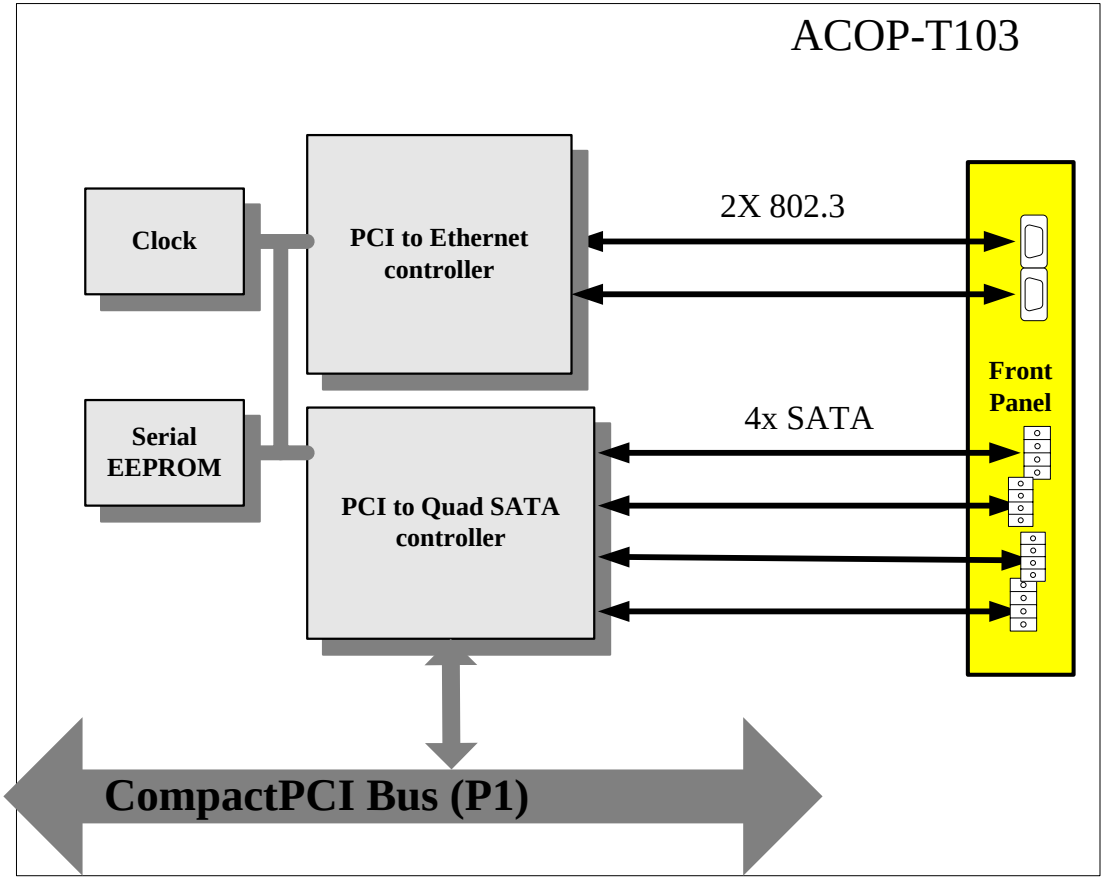

- PCI to 4-port Serial ATA (SATA) host controller
- Compliant with Serial ATA 1.0 specifications, of 1.5Gbit/second transfer rate with CRC checking
- Integrated Serial ATA Link and PHY logic
- Dual PCI to IEEE 802.3 10/100 Base Ethernet ports
- Build-in physical layer interface unit
- Full duplex: Both TX and RX supported
- 32bits/33Mhz CompactPCI peripheral slot, PICMG 2.0 compliant

ACOP-PS

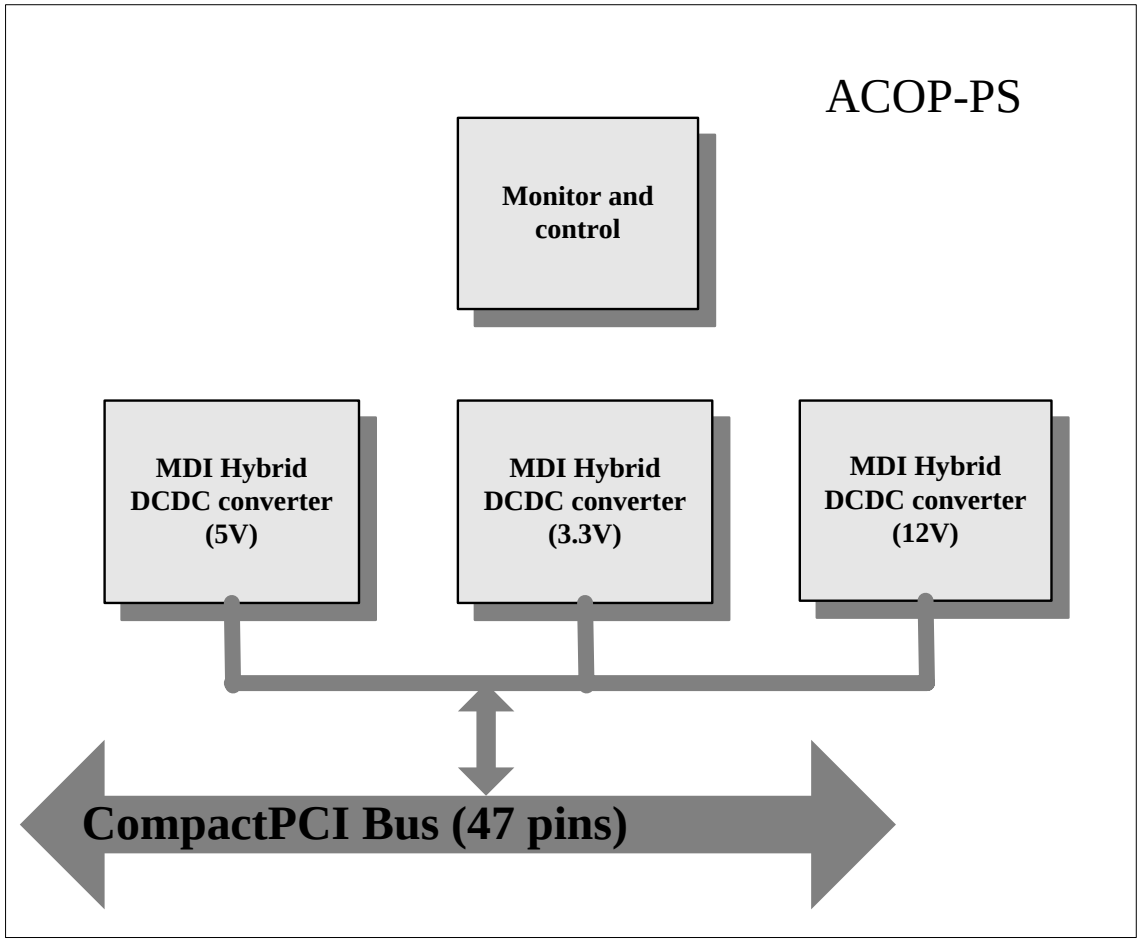

- **Input voltage range is 24 to 32Vdc**
- **Output Power:TBD watts**
  +5.06V +/- 3%
  +3.36V +/- 3%
  +12.1V +/- 5%
  Efficiency: > 75% @ full load, nominal line
- **Protections : over-voltage, over-current, short-circuit, over temperature and fault isolation**
- **Built-in EMI filters**
- **Backplane power connection via PICMG 2.11 compliant 47-pin power connecter**

ACOP Power Distribution And Power Feeders Protections

- **ACOP is supplied by the +28Vdc standard power feeder provided by the EXPRESS Rack**
- **Circuit breaker is used also to protect wirings and downstream circuits from thermal damage**
- **Two filters designed with output common mode filter chokes and low ESR capacitors**

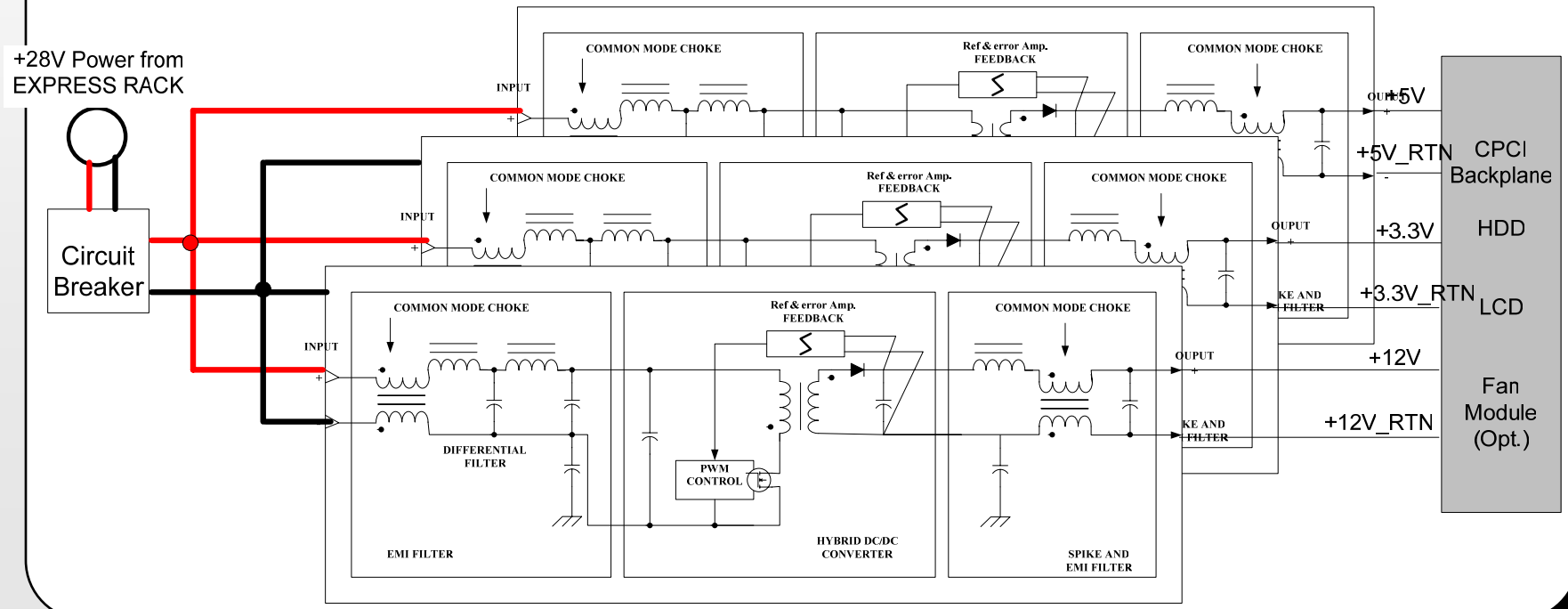

ACOP-BP

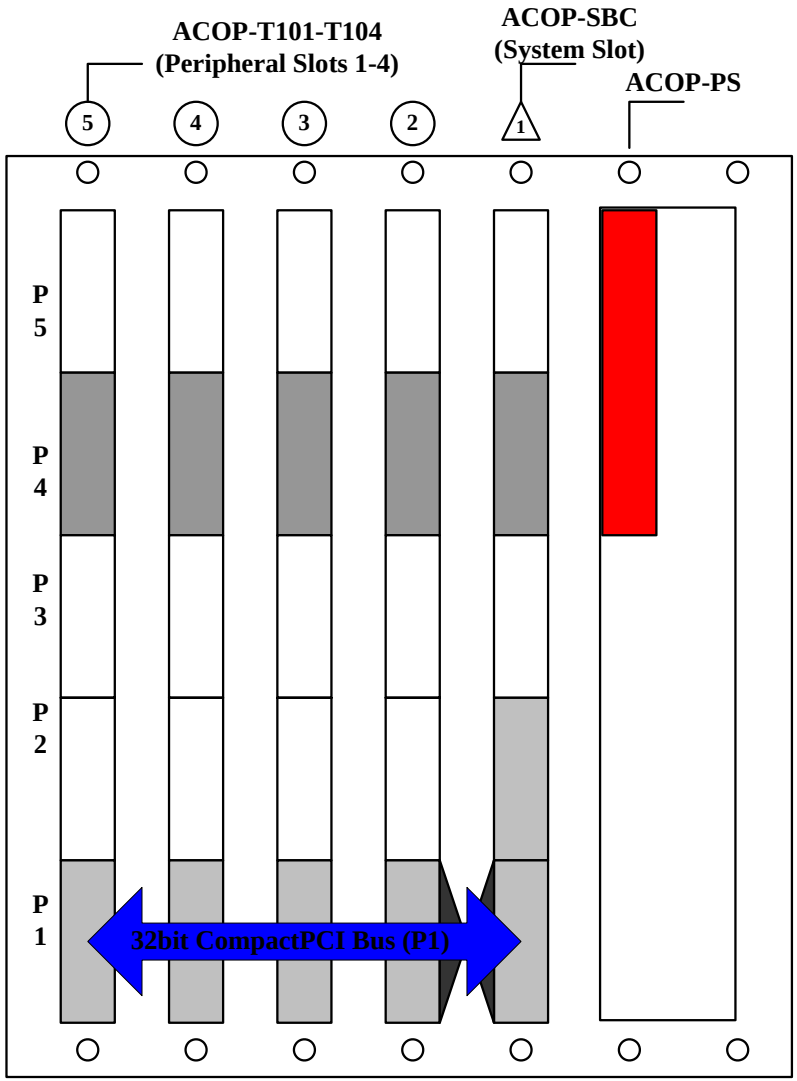

- Compliant with the CompactPCI core specification (PICMG 2.0 R3.0), including the external +12V and -12V power lines connectors for ground test only.
- Support 32-bit, 33 MHz PCI bus operation
- 3.3V V(I/O) signaling voltage only
- 5-slot wide, one system and four I/O slots
- Standard 47 pins power supply slot
- The peripheral interface signals for ACOP specific applications are routed on P4.

LCD Monitor

- **A Color TFT-LCD (Liquid Crystal Display) with an integral CCFL (Cold Cathode Fluorescent Lamp) backlight system will be mounted on the ACOP front panel.**
- **This TFT-LCD has a 6.4 inch diagonally measured active display area with VGA resolution (640 by 480 pixel array).**
- **5V power supply and TTL level input signals**
- **Backlight tube brightness is adjustable by means of push buttons and software.**

Thermal Sensors Network

- **The thermal sensor network will consist of Dallas one-wire bus devices attached to a single network. The devices will be mounted where appropriate within the ACOP system.**
- **Each ACOP board will have one or several sensors on it.**
- **Additionally several sensors will be mounted on the chassis to monitor base plate and hard drive temperatures.**
- **The digital I/O (DIO) function will be used to control this bus.**

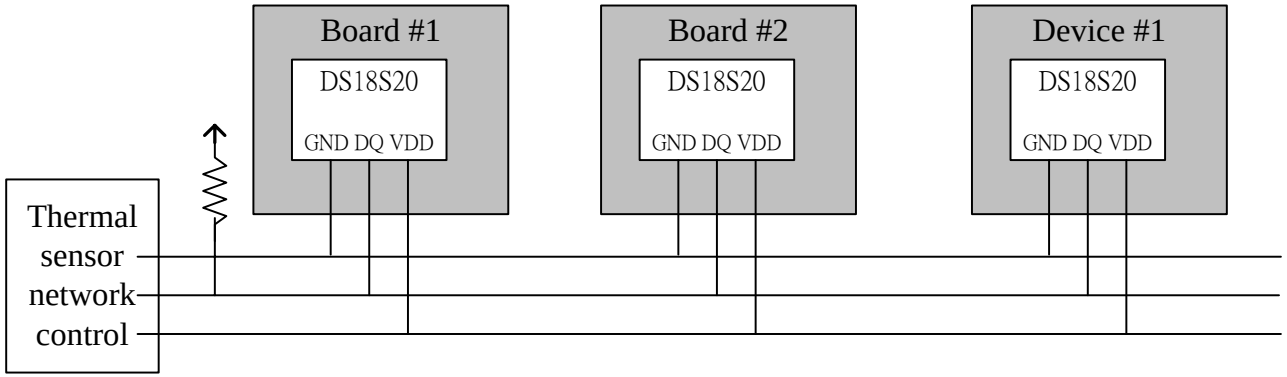

HDD (Hard Disk Drive)

- **All data transmitted by AMS-02 is recorded onto ACOP's hard drives as a master copy of the AMS-02 science data.**
- **There are four hard drives installed in ACOP providing 20 days of estimated recording time.**
- **The four installed hard drives will require periodic replacement by the ISS crew from the onboard stock of empty drives.**
- **New batches of hard drives will be delivered by STS and the original master copies of the AMS-02 data will be returned to earth by STS.**
- **The following is a list of the hardware features for the Hard Disk Drives:**
  - **Serial ATA with 1.5Gb/sec interface speed**
  - **Native Command Queuing**
  - **Build-in cache buffer (>16Mbytes)**
  - **Capacity 250 GB or Up**

Power Budget

Item	Power consumption (W)			Remarks
	Stand-by	Operative (average)	Operative (peak)	
ACOP-SBC	-	9.90	-	
ACOP-T101	-	1.65	-	
ACOP-T102	-	1.65	-	
ACOP-T103	-	5.00	-	
Spare Slot	-	0	-	
ACOP-PS	-	11.35	-	
ACOP-LCD (TBC)	-	6.30	-	
HDD1	0.72	-	12.54	Estimate operative 8.2W
HDD2	0.72	-	12.54	Estimate operative 8.2W
HDD3	0.72	-	12.54	Estimate operative 8.2W
HDD4	0.72	-	12.54	Estimate operative 8.2W

Power Budget in Diff. Operating Case

Item	Power consumption (W)			
	Thermal analysis	Cold start Warm start	Record or Playback (1HDD operative)	Record and playback (2HDDs opearative)
ACOP-SBC	9.90	9.90	9.90	9.90
ACOP-T101	1.65	1.65	1.65	1.65
ACOP-T102	1.65	1.65	1.65	1.65
ACOP-T103	5.00	5.00	5.00	5.00
Spare Slot	0	0	0	0
ACOP-PS	11.35	11.35	11.35	11.35
ACOP-LCD (TBC)	6.30	6.30	6.30	6.30
HDD1	12.54	0.72	8.2	8.2
HDD2	12.54	0.72	0.72	8.2
HDD3	0.72	0.72	0.72	0.72
HDD4	0.72	0.72	0.72	0.72
Total	62.37	38.73	46.21	53.69

ACOP Development Plan

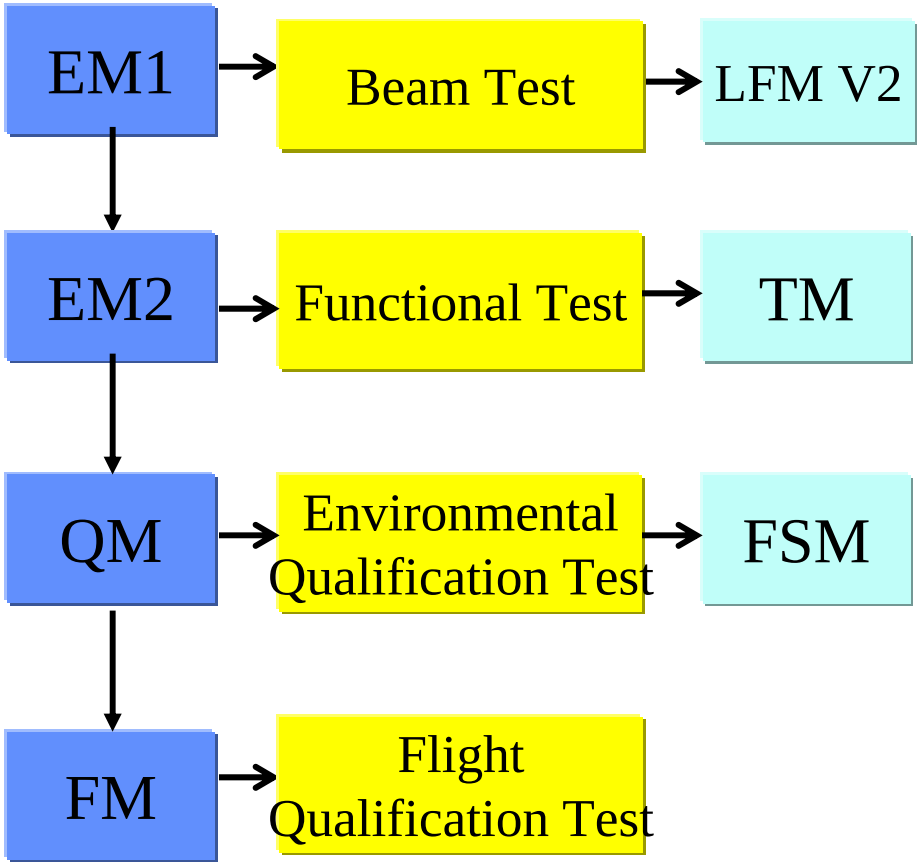

- EM (Engineering Model)
- LFM (Low Fidelity Model)
- TM (Training Model)
- QM (Qualification Model)
- FM (Flight Model)
- Flight Spare Model

Model to be built

- LFM V2 x2
- TMx1
- QMx2
- FMx2
- Spare Parts and ORU

ACOP-EM (Engineering Model)

- **ACOP-EM implementation**
  - **Use AMS J-crate (DAQ computer) single board computer (JSBC)**
  - **Use COTS PMC modules for SATA (HDD), Ethernet interface**
  - **Use COTS Power Supply (100 to 220V input) and LCD module**
  - **Design proprietary ACOP-EM-BP (CPCI backplane) , ACOP-EM-T102 (VGA+USB interface) and ACOP-EM-T101(HRDL) CCAs**
  - **Preliminary mechanical design drawings have been made**
- **Component survey**
  - **Adopt AMS PPSL (Preferred Parts Selection List)**
  - **For new components : Perform beam test to understand the radiation characteristics**
- **Used as a platform for application software development**
- **Perform function , performance and interface test**
- **Perform thermal measurement and result feedback to thermal analysis**
- **ACOP-EM will be updated to become the Training Model**

ACOP QM/FM/FS Development

- **QM (Qualification Model) engineering drawing will based on EM design**
- **PCB based on conduction cooled form factors**
- **Power Supply will adopted the design of AMS J-crate Power Distribution System (JPD)**
- **Perform QM test such as vibration, thermal, EMC, Accoustics …**
- **QM will be refurbished as FS (Flight Spare Model)**
- **FM (Flight Model) is the model to be launched and installed in ISS**

Physical Board Mechanical Design

IEEE 1101.2- Mechanical Core Specification for Conduction Cooled Eurocards

buried thermal layers within the PCB

Heat sink for high power components

Stiffening ribs cross the board

Expandable wedge lock on both sides

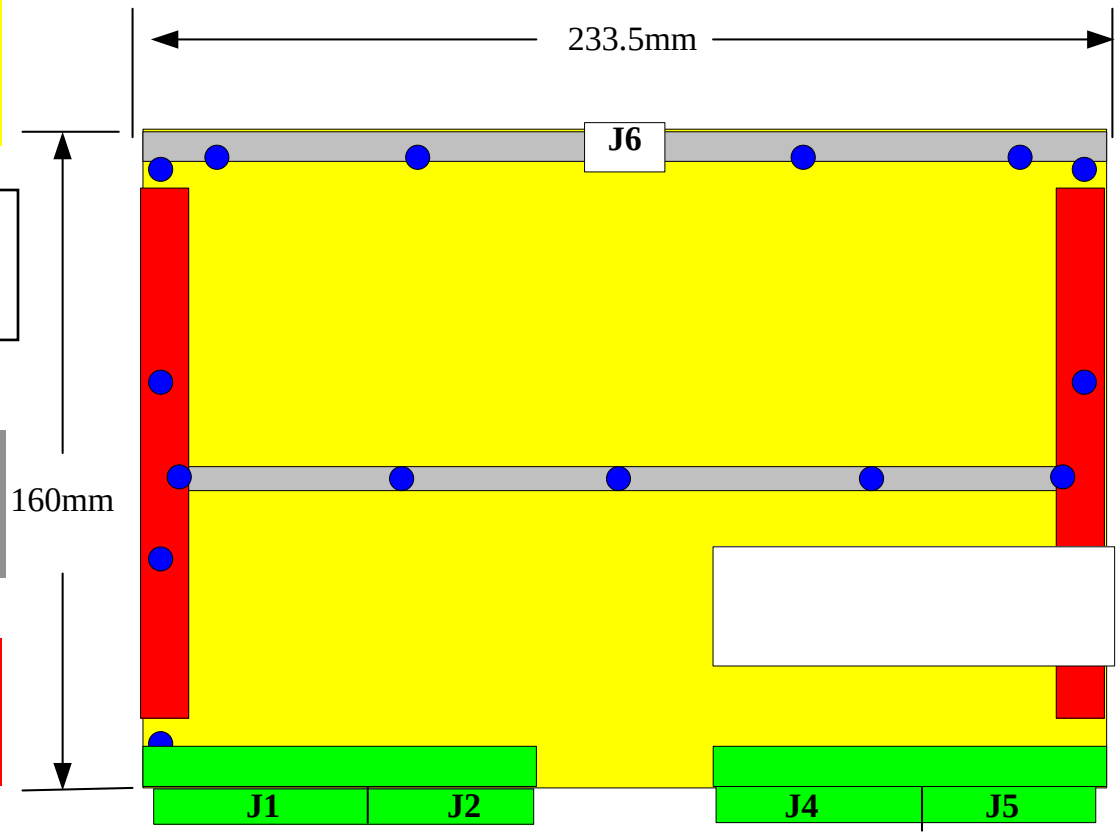

AMS JSBC FM