CARLO GAVAZZI

CARLO GAVAZZI SPACE SpA

ACOP

Doc.Type:	REPORT			DRD N°:	E18
Doc. N°:	**ACP-RP-CGS-005**	Issue: **1**	Date: **JAN 2005**	Page **1**	Of **48**
Title :	STRUCTURAL ANALYSIS AND DESIGN REPORT				

	Name & Function	Signature	Date
Prepared by:	ACOP Team		19/01/05
Approved by:	Magistrati G. (IU/SE) Grilli M. (IU/SE) Laplena D. (PA/SF) Cinquepalmi C. (PA/CC)		19-1-05 19/1/05 19/01/05 19/01/05
Application authorized by:	Pini C. (IU/PM)		19.1.05
Customer / Higher Level Contractor			
Accepted by:			
Approved by:			

DISTRIBUTION LIST	N	A	I
Internal			
External			

N=Number of copy A=Application I=Information

Data Management: Signature Date 18-1-04

File: ACP-RP-CGS-005_is1.doc

CHANGE RECORD			
ISSUE	*DATE*	*CHANGE AUTHORITY*	*REASON FOR CHANGE AND AFFECTED SECTIONS*
1	Jan 2005		First Issue

LIST OF VALID PAGES									
PAGE	*ISSUE*	*PAGE*	*ISSUE*	*PAGE*	*ISSUE*	*PAGE*	*ISSUE*	*PAGE*	*ISSUE*
1 - 48	1								

TABLE OF CONTENT

1. SCOPE OF THE DOCUMENT 5

2. DOCUMENTS 5

2.1 APPLICABLE DOCUMENTS 5
2.2 REFERENCE DOCUMENTS 6

3. COMPLIANCE MATRIX 6

4. ACRONYMS AND ABBREVIATIONS 7

5. HARDWARE DESCRIPTION 8

6. FEM DESCRIPTION 10

6.1 USED SOFTWARE 10
6.2 MODEL UNITS 10
6.3 MODEL COORDINATE SYSTEM 10
6.4 MODEL MATERIALS 11
6.5 FEM MODEL COMPONENTS DESCRIPTION 13
6.6 MODEL BOUNDARY CONDITIONS 18
6.7 MODEL MASS BUDGET 19

SINGLE BOARD COMPUTER +DIO 19

LCD MONITOR 19

6.8 MODEL CHECK 20
6.8.1 MODEL SIZE AND GEOMETRY 20
6.8.2 FREE-FREE AND HARDMOUNTED MODES 21
6.8.3 1 G CHECK 22
6.8.4 STRAIN ENERGY CHECK 23

7. DIMENSIONING LOADS 24

7.1 DEFINITION OF STATIC AND DYNAMIC LOAD 24

8. DIMENSIONING RULES 26

8.1 SAFETY FACTORS 26
8.2 TEMPERATURE DERATING FACTOR 26
8.3 MARGINS OF SAFETY FOR STRUCTURE 26

9. DYNAMIC ANALYSIS 27

9.1 DEFINITION OF DYNAMIC VERIFICATION 27
9.2 EIGENFREQUENCIES AND MODE SHAPES 27
9.3 EFFECTIVE MASS 31

10. STATIC ANALYSIS 33

10.1 DISPLACEMENT ANALYSIS 33
10.2 STRESS ANALYSIS 36
10.3 JOINT ANALYSIS 39
10.3.1 NOMINAL CONFIGURATION 39
10.4 MOS SUMMARY FOR STRESS ANALYSIS 44
10.5 MOS SUMMARY FOR JOINT ANALYSIS 44

11. CONCLUSIONS AND COMMENTS 45

1. SCOPE OF THE DOCUMENT

This report provides the structural analysis for ACOP to satisfy Space Shuttle and ISS safety criteria. It contains the description of Finite Element model developed to verify the safety of ACOP structure and the required natural frequency analysis, stress analysis and joint analysis for ACOP Preliminary Design Review (PDR).

2. DOCUMENTS

2.1 APPLICABLE DOCUMENTS

AD	Doc. Number	Issue / Date	Rev.	Title / Applicability
1	SSP 52000-IDD-ERP	D / 6/08/03		EXpedite the PRocessing of Experiments to Space Station (EXPRESS) Rack Payloads Interface Definition Document
2	NSTS/ISS 13830	C / 01/12/1996		Implementation Procedures for Payloads System Safety Requirements – For Payloads Using the STS & ISS.
3	JSC 26493	17/02/1995		Guidelines for the preparation of payload flight safety data packages and hazard reports.
4	SSP 50004	April 1994		Ground Support Equipment Design requirements
5	SSP-52000-PDS	March 1999	B	Payload Data Set Blank Book
6	SSP 52000-EIA-ERP	Feb. 2001	A	Express Rack Integration Agreement blank book for Express Rack payload
7	GD-PL-CGS-001	3 / 17/03/99		PRODUCT ASSURANCE & RAMS PLAN
8	SSP 52000 PAH ERP	Nov. 1997		Payload Accommodation Handbook for EXPRESS Rack
9	SSP 50184	D / Feb. 1996		Physical Media, Physical Signaling & link-level Protocol Specification for ensuring Interoperability of High Rate Data Link Stations on the International Space Program
10	SSP 52050	D / 08/06/01		S/W Interface Control Document for ISPR ***ONLY FOR HRDL, SECTION 3.4 ***
11	ECSS-E-40	A / April 1999	13	Software Engineering Standard
12	AMS02-CAT-ICD-R04	29/08/2003	04	AMS02 Command and Telemetry Interface Control document. Section AMS-ACOP Interfaces
13	SSP 52000-PVP-ERP	Sept. 18, 2002	D	Generic Payload Verification Plan EXpedite the PRocessing of Experiments to Space Station (EXPRESS) Rack Payloads
14	NSTS 1700.7B	Rev. B Change Packet 8 / 22.08.00		Safety Policy and Requirements for Payloads using the STS
15	NSTS 1700.7B Addendum	Rev. B Change Packet 1 01.09.00		Safety Policy and Requirements for Payloads using the International Space Station
16	SSP 52005	Dec. 10, 1998		Payload Flight equipment requirements and guidelines for safety critical structures
17	NSTS 18798B	Change Packet 7 10.00		Interpretation of NSTS Payload Safety Requirements
18	MSFC-HDBK-527	15/11/86	E	Materials selection list for space hardware systems Materials selection list data
19	GD-PL-CGS-002	1/ 12-02-99		CADM Plan
20	GD-PL-CGS-004	2/07-04-03		SW Product Assurance Plan
21	GD-PL-CGS-005	2/09-05-03		SW CADM Plan

2.2 REFERENCE DOCUMENTS

RD	Doc. Number	Issue / Date	Rev.	Title
1	GPQ-MAN-02	1		Commercial, Aviation and Military (CAM) Equipment Evaluation Guidelines for ISS Payloads Use
2	BSSC (96)2	1 / May 96		Guide to applying the ESA software engineering standards to small software projects
3	GPQ-MAN-01	2 / Dec. 98		Documentation Standard for ESA Microgravity Projects
4	MS-ESA-RQ-108	1 / 28-Sep-2000		Documentation Requirements For Small And Medium Sized MSM Projects
5	PSS-05			Software Engineering Standards
6	GPQ-010	1 / May 95	A	Product Assurance Requirements for ESA Microgravity Payload. Including CN 01.
7	GPQ-010-PSA-101	1		Safety and Material Requirements for ESA Microgravity Payloads
8	GPQ-010-PSA-102	1		Reliability and Maintainability for ESA Microgravity Facilities (ISSA). Including CN 01
9	MIL-HDBK-5	G/1994		Metallic Materials and Element for Aerospace Vehicle Structures
10	NASA Reference Publication 1228	1/1990		Fastener Design Manual
11		June, 1973		E. F. BRUHN – Analysis & Design Of Flight Vehicle Structure
12	SSP 52000-IDD-ERP	E / 09/09/2003		EXpedite the PRocessing of Experiments to Space Station (EXPRESS) Rack Payloads Interface Definition Document

3. COMPLIANCE MATRIX

For the structural analysis the SSP 52000-IDD-ERP shall be used in issue E instead issue D.

Requirement	Reference	Item	Notes
Minimum natural frequency compatibility	SSP 52000-IDD-ERP E Section 4.1.1.1	EXPRESS payload frequency compatibility	Equal to or exceeding 35 Hz
Minimum natural frequency compatibility	SSP 52000-IDD-ERP E Section 4.1.1.2	Middeck payload frequency compatibility	Equal to or exceeding 30 Hz
Positive margin of safety	SSP 52000-IDD-ERP E Section 4.1.2.1	EXPRESS rack low frequency launch and landing loads	Factor of safety for yielding =1.25 Factor of safety for ultimate =2.0
Positive margin of safety	SSP 52000-IDD-ERP E Section 4.1.2.2	Middeck low frequency launch and landing loads	Factor of safety for ultimate =1.4. Load values are small than EXPRESS rack low frequency loads, will be neglected in this report.
Positive margin of safety	SSP 52000-IDD-ERP E Section 4.2.1	Middeck emergency landing load	Only ultimate load.
Positive margin of safety	SSP 52000-IDD-ERP E Section 4.2.2	EXPRESS rack emergency landing load	May be neglected for analysis using low frequency loads
Positive margin of safety	SSP 52000-IDD-ERP E Section 4.3.1	EXPRESS rack random vibration loads	Combined into EXPRESS low frequency loads
Positive margin of safety	SSP 52000-IDD-ERP E Section 4.3.2	Middeck random vibration loads	Has been included into middeck low frequency liftoff loads.

4. ACRONYMS AND ABBREVIATIONS

Acronyms	Full Text
ACOP	AMS-02 Crew Operation Post
EXPRESS	EXpedite the PRocessing of Experiments Space Station
DoF	Degree of freedom
FE	Finite Element
FSu	Ultimate Factor of Safety
FSy	Yield Factor of Safety
MDL	Mid Deck Locker
MoS	Margin of Safety
MoSu	Margin of Safety against ultimate failure
MoSy	Margin of Safety against material yielding
Rs	Shear load ratio
Rt	Tensile load ratio
RVLF	Random Vibration Load Factor

5. HARDWARE DESCRIPTION

The ACOP dimension is 460x535x273mm meeting the Mid Deck Locker (MDL) form factor as modified for the EXPRESS Rack Payloads. The ACOP structure includes two parts: the locker and a chassis inside. This aluminium alloy chassis provide a 6U CompactPCI card cage and 4 hard disk driver (HDD) slots, and a lot of fins in two sides of chassis as heat sinks. Due to the limited space the LCD (its presence TBC in detail design) is mounted to the front panel of the locker. The cooling air comes from inlet duct and goes to outlet duct; these ducts are directly connected to a stiffener plate adjoining electronic backplane and locker backplate at each end. At corners of locker backplate, four sleeve bolt receptacles are used to fasten ACOP structure and EXPRESS rack backplate together. The 3D drawings of ACOP structure are as figures 5.1A~5.1C.

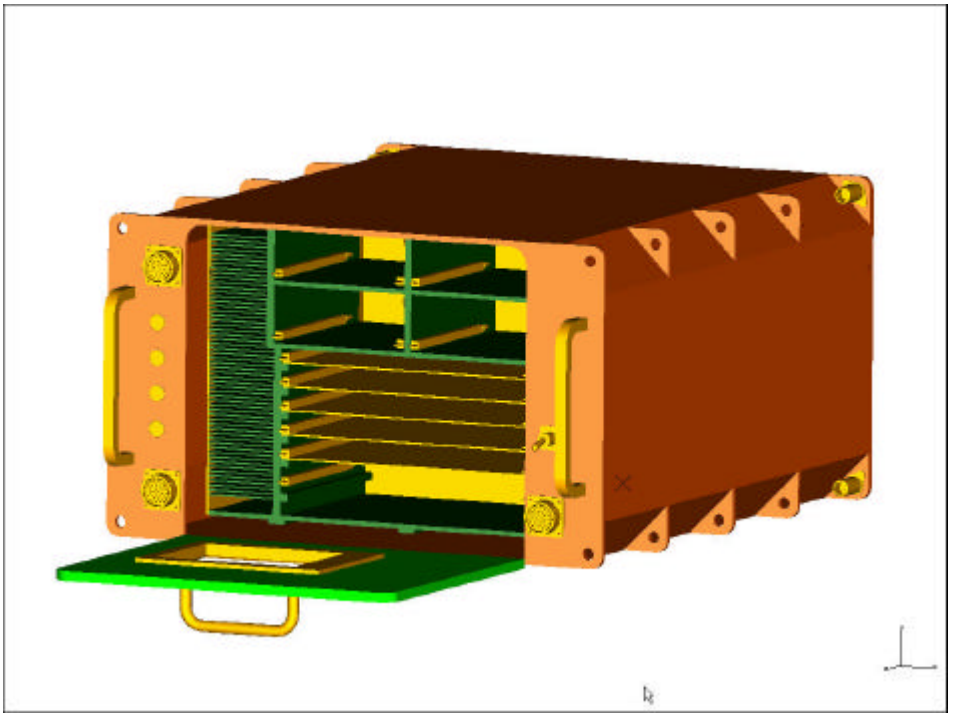

Figure 5.1A The front view of ACOP structure (HDD assembly and power board have been removed)

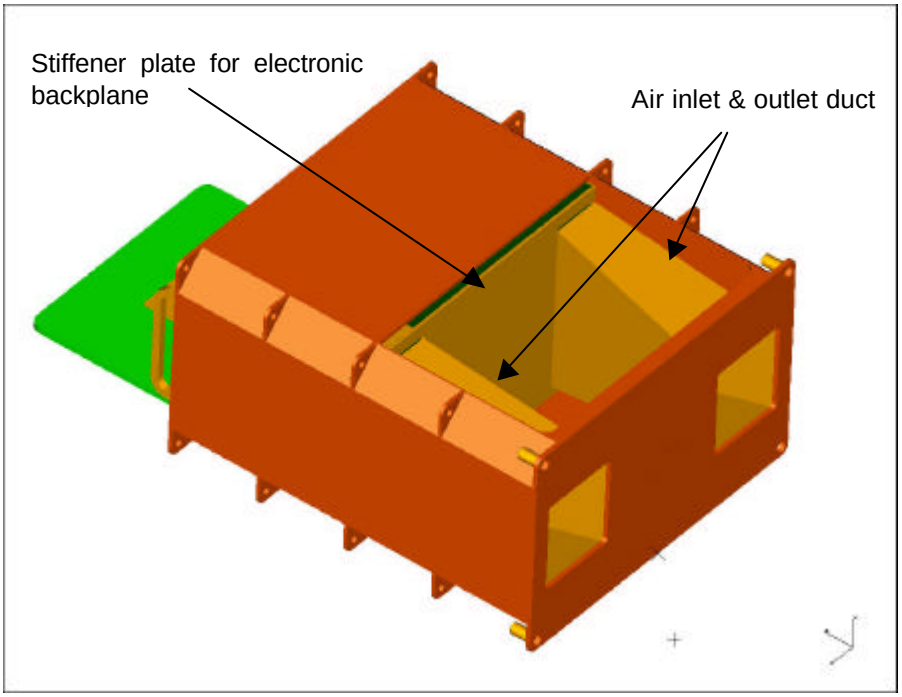

Figure 5.1B The up view of ACOP structure

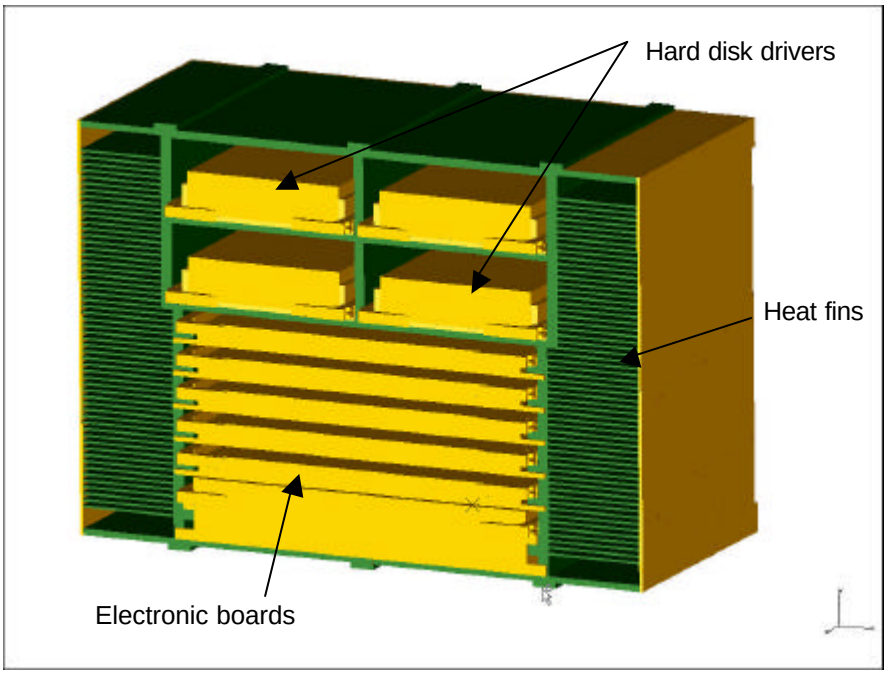

Figure 5.1C The view of chassis assembly

6. FEM DESCRIPTION

Basic on 3D mechanical design drawing and mass budge of ACOP engineering model, the finite element model was built to verify structural safety. Figures and explanations that describe the Finite Element model used for the analysis are list as follows.

6.1 USED SOFTWARE

MSC/NASTRAN v2004 software is used for analysis, including model check, natural modal analysis, and static stress analysis.

EDS/I-DEAS 10m2 software is used for Pre/Post processing, including FE model construction, results plotting.

6.2 MODEL UNITS

The content of unit system used in the model, analysis and report list as follows:

Length:	meter (m)
Mass:	kilogram (kg)
Force:	Newton (N)
Material densities:	kg/m^3
Young's module :	N/m^2 (Pa)
Material strength :	N/m^2 (Pa)
Stress:	N/m^2 (Pa)
Displacement:	m

6.3 MODEL COORDINATE SYSTEM

The coordinate system used in the FE model is shown as figure 6.3.1. Three axis directions are same as ISPR coordinate system used in EXPRESS rack payload.

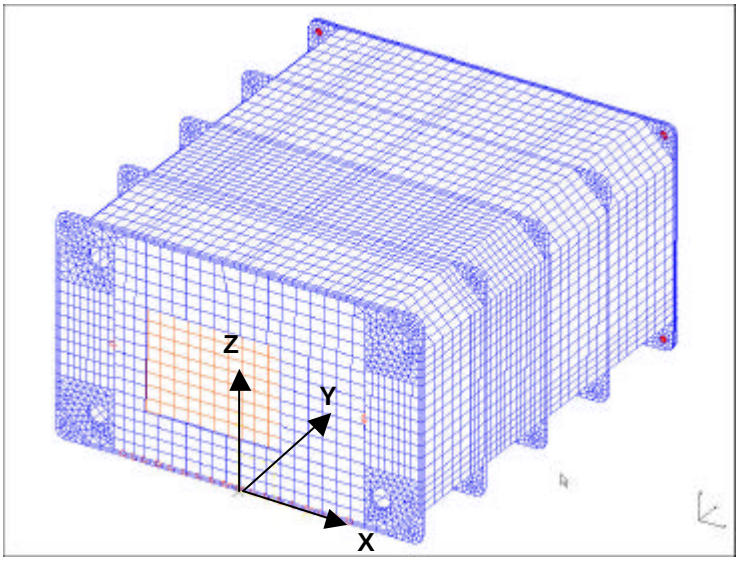

Figure 6.3.1 The coordinate system used in the FE model

Origin : locate at a central point in the bottom edge of locker front plane.

Orientation: Face to locker front plane, the X-axis points to right direction. The Z-axis is in the front plane of locker, perpendicular to the X-axis positive upward to the top plane of locker. The Y-axis completes a right-hand system.

6.4 MODEL MATERIALS

The material aluminum alloy AL 7075-T7351 is used for the entire structure; the material FR4 is used for electronic boards. Mechanical properties of AL 7075-T7351 and FR4 are list in the table 6.4.1 and Table 6.4.2.

AL 7075		
source	MIL-HDBK-5G	
Specification	AMS 4078 and QQ-A-250/12	
Form	Plate	
Temper	T7351	
Thickness	0.5~1.0 in	
basisi	A	
	ksi	**x10^6 N/m^2**
Ftu	68	468.9
Fty	57	393
Fsu	38	262
Fbru(e/D=1.5)	103	710.2
Fbry (e/D=1.5)	81	558.49
E	10.3	71020.
	lb/in^3	**kg/m^3**
Density	0.101	2.79E+3
Poisson Ratio	0.33	

Table 6.4.1 Mechanical and physical properties of AL 7075

Material	**Specification**	
FR4		
	ksi	**N/m^2**
Ftu	29	2.00E+08
Fty	N/A	N/A
Fcu	50.7	3.497E+8
Fcy	N/A	N/A
Fbru(e/D=1.5)	--	--
Fbry(e/D=1.5)	N/A	N/A
E	2.61E+3	1.80E+10
	lb/in^3	**kg/m^3**
Density	6.5E-02	1.799E+3
Poisson Ratio	0.3	
Reference	Vonroll Isola catalogue	01/06/1995

Table 6.4.2 Mechanical and physical properties of FR4

Electronic boards and LCD module are not available now. Here, assume reasonable material properties of these parts as shown in Table 6.4.2 which refer to AMS02 E-crate structural analysis report. Density values of boards are modified in FE model to cover weight of electronic components and to meet the FE mass budge in the section 6.7. Assumed density of electronic board is shown in Table 6.4.3.

Electronic board density	(kg/m^3)
JSBC	5.80 E+3
Slot-2	5.07 E+3
Slot-3	5.07 E+3
Slot-4	5.07 E+3
Power supply	1.45 E+4
Backplane-HDD	4.31 E+3
Backplane-slot	3.42 E+3
LCD module	8.88 E+3

Table 6.4.3 Assumed density of electronic boards.

The bolt used material and strength are defined in the chapter relevant to joint analysis.

6.5 FEM MODEL COMPONENTS DESCRIPTION

The geometry of Finite Element (FE) model comes from CAD design file. Hard disk drivers are not in chassis during flight, so those are not included in FE model. Every items simulated in the FE model are described as follows:

MODEL SUMMARY	
GRID POINTS	78680
CHEXA ELEMENTS	44694
CPENTA ELEMENTS	120
CQUAD4 ELEMENTS	2160
CTETRA ELEMENTS	1562
RBE2 ELEMENTS	107

Table 6.5.1 FE model summary

Next figure shows the locker FE model.

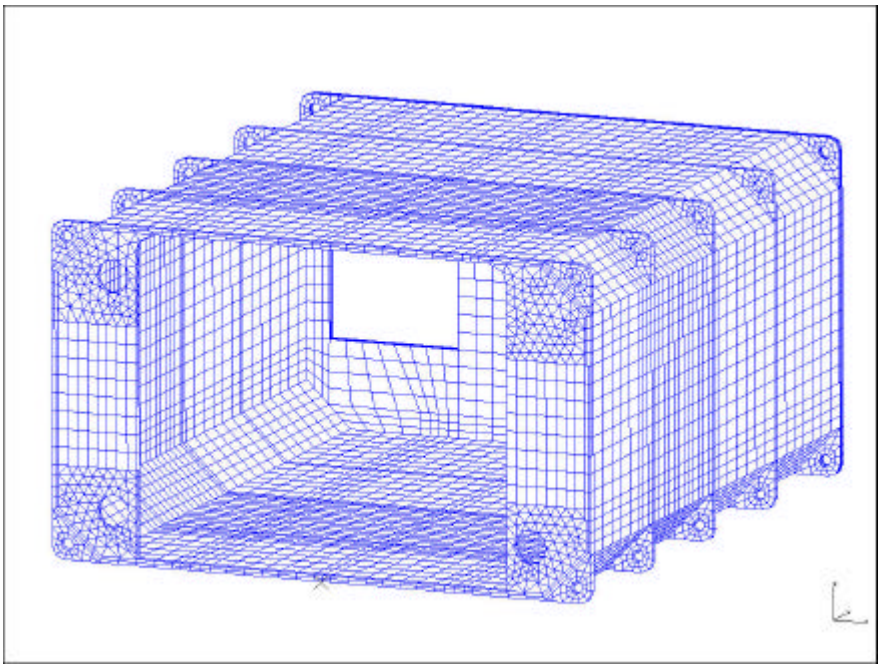

Figure 6.5.1 Locker FE model

Locker	
FEM Elements	CHEXA
	CPENTA
	CTETRA
Material	AL 7075-T7351
Connections	Node

Table 6.5.2 Locker FEM characteristics

Next figure shows the chassis FE model.

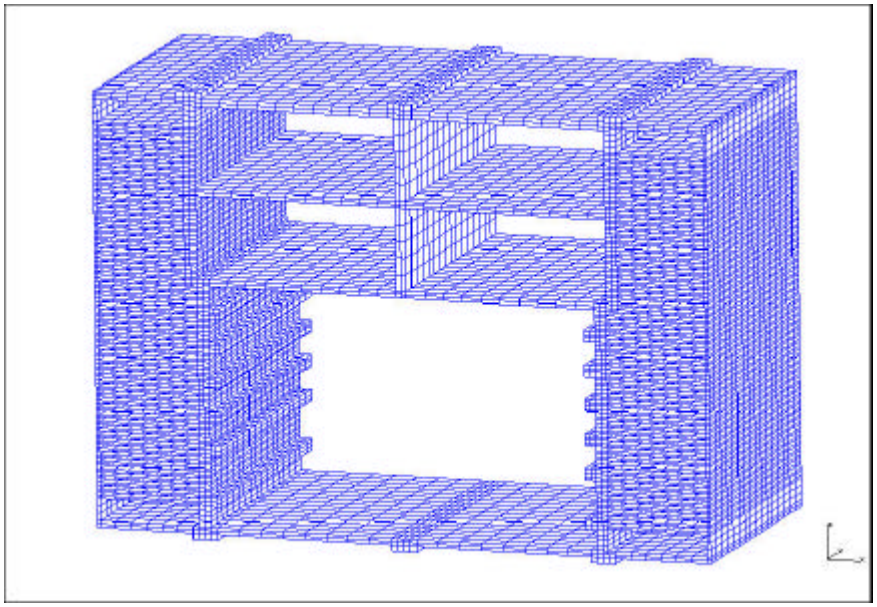

Figure 6.5.2 Chassis FE model

Chassis	
FEM Elements	CHEXA
Material	AL 7075-T7351
Connect to locker	Node

Table 6.5.3 Chassis FEM characteristics

Next figure shows the air in/outlet and stiffener plate FE model.

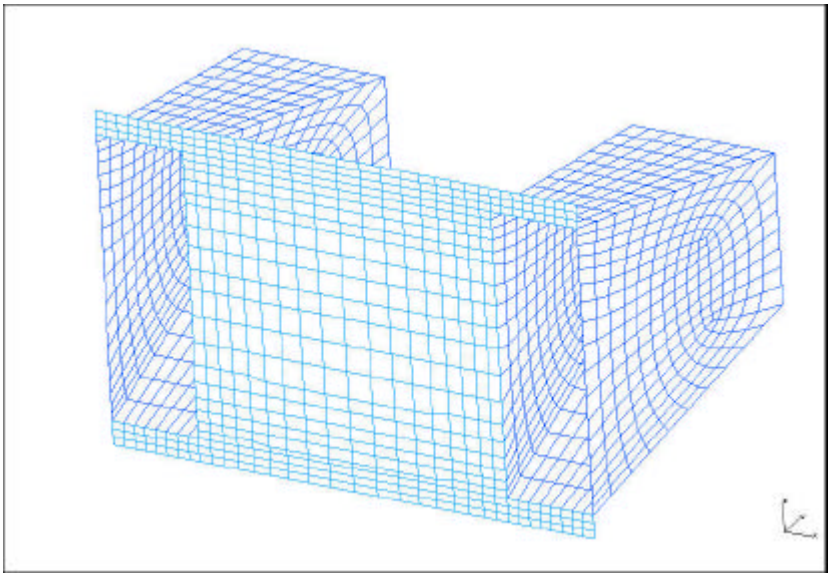

Figure 6.5.3 Air in/outlet and stiffener plate FE model

Air in/outlet and stiffener plate	
FEM Elements	CQUAD4
Material	AL 7075-T7351
Thickness	1.6/2.0 mm
Connect to locker	Node
Connect to chassis	RBE2 element

Table 6.5.4 Air in/outlet and stiffener plate FEM characteristics

Next figure shows the front panel FE model.

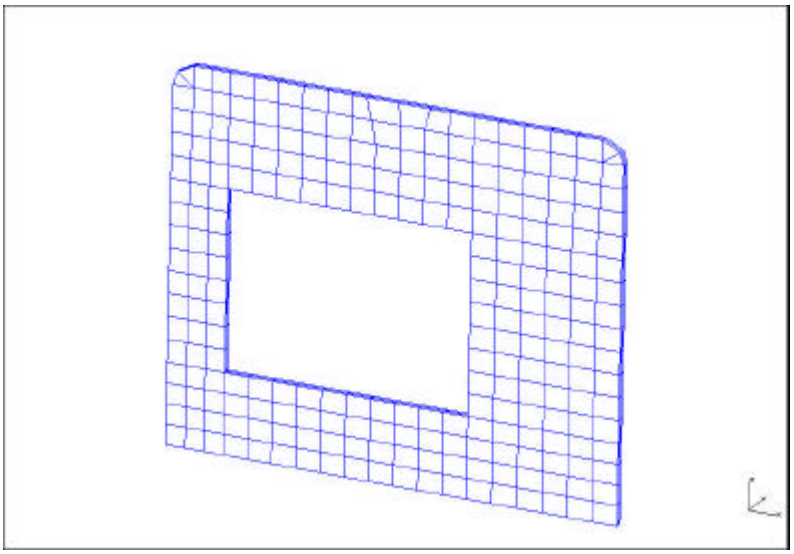

Figure 6.5.4 Front panel FE model

Front panel	
FEM Elements	CHEXA
Material	AL 7075-T7351
Connect to locker: two corners and mid-point in top-edge	Node
Connect to locker: bottom-edge	RBE2 element
Connect to locker: mid-point in two side-edge	RBE2 element

Table 6.5.5 Front panel FEM characteristics

Next figure shows electronic boards FE model. For the conservative assumption for frequency and stress analysis electronic boards stiffeners (except power supply board stiffeners) have not been modelled.

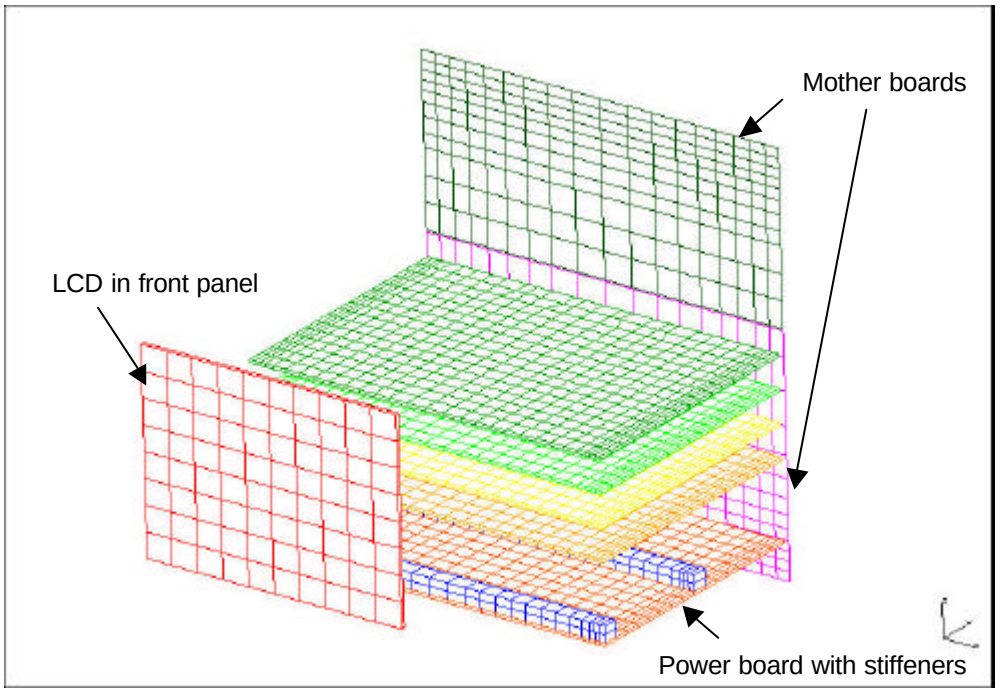

Figure 6.5.5 Electronic boards FE model

Electronic boards	
FEM Elements	CHEXA
	CQUAD4
Material	FR4
Thickness	2 mm
Slot1~Slo4,Power board connect to chassis	Node
Slot1~Slo4,Power board connect to mother boards	RBE2 element
Mother boards connect to chassis	RBE2 element
LCD connect to front panel	Node

Table 6.5.6 Electronic boards FEM characteristics

6.6 MODEL BOUNDARY CONDITIONS

ACOP crate is connected to the EXPRESS rack through 4 bolts. All DoFs of fastened point at 4 corners of locker backplate are fixed shown as figure 6.6.1and 6.6.2. The fastened point connected to all nodes in the internal surface of the hole by rigid bars. The joint analysis would be done with reaction forces at fastened points.

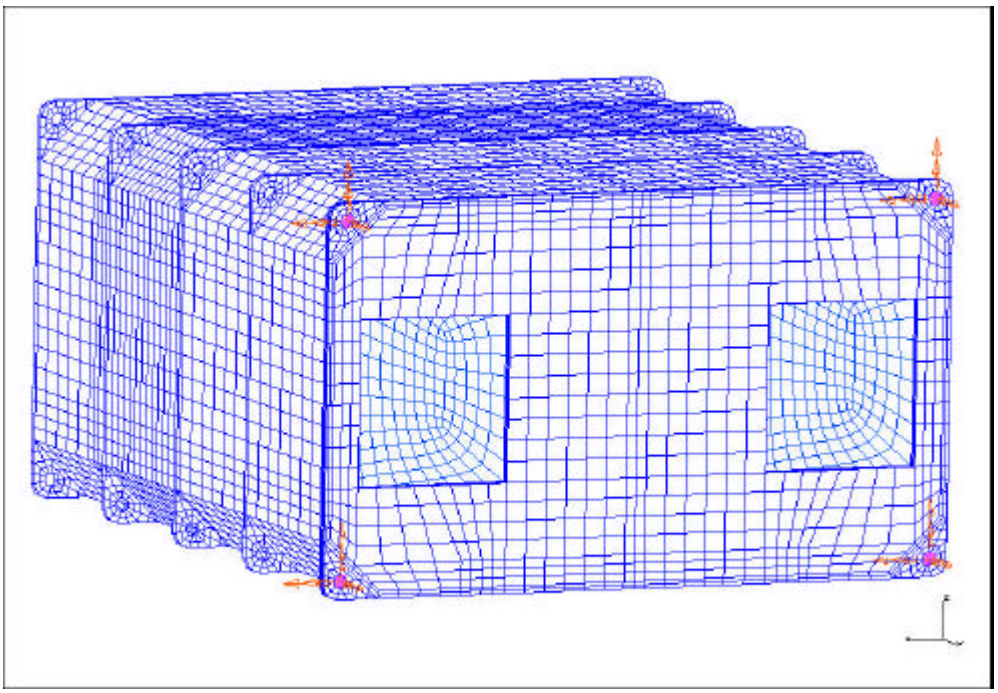

Figure 6.6.1 Boundary condition simulation

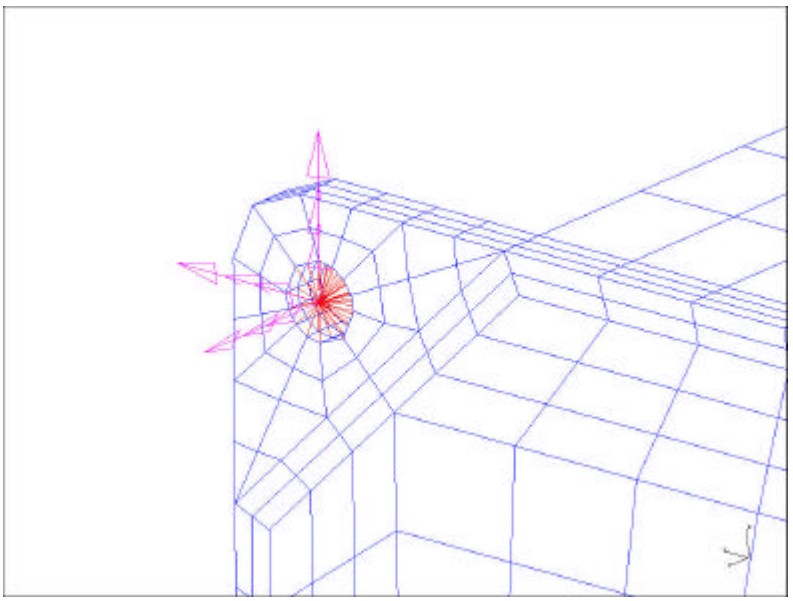

Figure 6.6.2 Local details for boundary condition

6.7 MODEL MASS BUDGET

The model mass budge is abstracted from the power and mass budge of ACOP flight model. It is shown as following Table. HDD, HDD caddy, cables, connectors, handle, fasteners are not modelled in FE model. The 10% contingency mass of each part is added into the FE model for considering assembly or manufacture tolerance.

LOC	Type	Description	CAD weight (g)	FE mass (g) Original model	FE mass (g) Add 10% contingency
CompactPCI chassis					
SLOT1	Elec.	Single Board Computer	400.0	400.1	440.1
SLOT2	Elec.	CompactPCI 6U HRDL	350.0	350.0	385.0
SLOT3	Elec.	CompactPCI 6U Video + USB + DIO	350.0	350.0	385.0
SLOT4	Elec.	CompactPCI 6U Ethernet + SATA	350.0	350.0	385.0
Backplane	Elec.	CompactPCI Backplane	220.0	220.0	242.0
Backplane	Elec.	HDD Backplane	200.00	200.3	220.3
Power	Elec.	Power Distribution	1005.0		
		Two stiffener on power board	130.7	1135.7	1249.3
LCD					
	Elec.	LCD Monitor	335.00		
	Elec.	Backlight Inverter	100.00	435.0	478.5
Mechanical Infrastructure					
	Mech.	ComapctPCI and hard drive chassis	8910.0	8910.0	9801.0
	Mech.	Crate Body as ISS Locker	11900.0	11990.9	13190.0
	Mech.	Front Panel upper	857.0	857.6	943.4
	Mech.	DUCT x 2	1134.0	1138.0	1251.8
	Mech.	internal side plate x 2	463.2	463.2	509.5
	Mech.	Backplane stiffener plate	368.0	373.2	410.52
	Mech.	Cable, connector, bolts	2000.0		
Total			29072.9	27174.0	29891.4

Table 6.7.1 The mass budge of FE model

6.8 MODEL CHECK

This section contains several summary tables to describe mathematical correctness of the FE model.

6.8.1 MODEL SIZE AND GEOMETRY

MATHEMATICAL MODEL VERIFICATION RESULTS
MODEL SIZE AND GEOMETRY CHECK

RUN FILE NAMES
Geocheck.dat

```
COMMAND :

GEOMCHECK Q4_SKEW  =  30.0, SUMMARY
GEOMCHECK Q4_TAPER =  0.50, SUMMARY
GEOMCHECK Q4_WARP  =  0.05, SUMMARY
GEOMCHECK Q4_IAMIN  =  26.0, SUMMARY
GEOMCHECK Q4_IAMAX  =  155.0, SUMMARY
GEOMCHECK HEX_AR     =  100.0, SUMMARY
GEOMCHECK HEX_EPLR =  0.50, SUMMARY
GEOMCHECK HEX_DETJ  =  0.0, SUMMARY
GEOMCHECK HEX_WARP =  0.707, SUMMARY
GEOMCHECK TET_AR     =  100.0, SUMMARY
GEOMCHECK TET_EPLR  =  0.50, SUMMARY
GEOMCHECK TET_DETJ   =  0.0, SUMMARY
GEOMCHECK TET_DETG  =  0.0, SUMMARY

ELSUM(PIDSUM) = ALL
```

M O D E L S U M M A R Y

```
NUMBER OF GRID     POINTS        =   78680

NUMBER OF CHEXA     ELEMENTS =   44694
NUMBER OF CPENTA   ELEMENTS =     120
NUMBER OF CQUAD4   ELEMENTS =    2160
NUMBER OF CTETRA   ELEMENTS =    1562
NUMBER OF RBE2       ELEMENTS =     107
```

GEOMCHECK command has no fail elements output.

Table 6.8.1 FEM Geometry Check

6.8.2 FREE-FREE AND HARDMOUNTED MODES

MATHEMATICAL MODEL VERIFICATION RESULTS
MASS PROPERTIES, FREE-FREE MODES AND HARDMOUNTED MODES

RUN FILE NAMES
Free-free.dat, modal.dat

PARAMETERS :
PARAM AUTOSPC YES
PARAM GRDPNT 61137
PARAM K6ROT 1.00000
PARAM POST -2

MASS PROPERTIES (kg)

```
                    O U T P U T   F R O M   G R I D   P O I N T   W E I G H T   G E N E R A T O R
                          REFERENCE POINT =    61137 (Origin of FE model coordinate)
                                                   M O
 *  2.989109E+01  0.000000E+00  0.000000E+00  0.000000E+00  3.971681E+03 -6.798718E+03 *
 *  0.000000E+00  2.989109E+01  0.000000E+00 -3.971681E+03  0.000000E+00 -3.320394E+00 *
 *  0.000000E+00  0.000000E+00  2.989109E+01  6.798718E+03  3.320394E+00  0.000000E+00 *
 *  0.000000E+00 -3.971681E+03  6.798718E+03  2.922208E+06  2.789576E+01  2.536142E+02 *
 *  3.971681E+03  0.000000E+00  3.320394E+00  2.789576E+01  1.387689E+06 -9.097194E+05 *
 * -6.798718E+03 -3.320394E+00  0.000000E+00  2.536142E+02 -9.097194E+05  2.743331E+06 *
                                                    S
                                  *  1.000000E+00  0.000000E+00  0.000000E+00 *
                                  *  0.000000E+00  1.000000E+00  0.000000E+00 *
                                  *  0.000000E+00  0.000000E+00  1.000000E+00 *
                                                 DIRECTION
                 MASS AXIS SYSTEM (S)     MASS          X-C.G.          Y-C.G.          Z-C.G.
                            X          2.989109E+01    0.000000E+00  2.274496E+02  1.328717E+02
                            Y          2.989109E+01   -1.110830E-01  0.000000E+00  1.328717E+02
                            Z          2.989109E+01   -1.110830E-01  2.274496E+02  0.000000E+00
                                                    I(S)
                                  *  8.481179E+05  7.273265E+02  1.875723E+02 *
                                  *  7.273265E+02  8.599649E+05  6.362117E+03 *
                                  *  1.875723E+02  6.362117E+03  1.196965E+06 *
                                                    I(Q)
                                        *  8.598901E+05                 *
                                        *             8.480725E+05      *
                                        *                        1.197085E+06 *
                                                     Q
                                   *  6.195389E-02 -9.980789E-01  4.961090E-04 *
                                   * -9.979013E-01 -6.193348E-02  1.889940E-02 *
                                   * -1.883237E-02 -1.665959E-03 -9.998212E-01 *
```

RIGID BODY MODES CHECK

R E A L E I G E N V A L U E S

MODE NO.	EXTRACTION ORDER	EIGENVALUE	RADIANS	CYCLES	GENERALIZED MASS	GENERALIZED STIFFNESS
1	1	-1.093341E-04	1.045629E-02	1.664171E-03	1.000000E+00	-1.093341E-04
2	2	-8.730020E-05	9.343457E-03	1.487057E-03	1.000000E+00	-8.730020E-05
3	3	-1.731961E-05	4.161683E-03	6.623524E-04	1.000000E+00	-1.731961E-05
4	4	1.322520E-06	1.150009E-03	1.830296E-04	1.000000E+00	1.322520E-06
5	5	6.379312E-05	7.987060E-03	1.271180E-03	1.000000E+00	6.379312E-05
6	6	7.442050E-05	8.626731E-03	1.372987E-03	1.000000E+00	7.442050E-05
7	7	2.797675E+05	5.289305E+02	8.418190E+01	1.000000E+00	2.797675E+05

HARDMOUNTED MODES CHECK

R E A L E I G E N V A L U E S

MODE NO.	EXTRACTION ORDER	EIGENVALUE	RADIANS	CYCLES	GENERALIZED MASS	GENERALIZED STIFFNESS
1	1	2.759867E+05	5.253444E+02	8.361115E+01	1.000000E+00	2.759867E+05
2	2	3.107426E+05	5.574429E+02	8.871980E+01	1.000000E+00	3.107426E+05
3	3	3.163854E+05	5.624815E+02	8.952171E+01	1.000000E+00	3.163854E+05
4	4	3.188632E+05	5.646797E+02	8.987157E+01	1.000000E+00	3.188632E+05
5	5	9.224486E+05	9.604419E+02	1.528591E+02	1.000000E+00	9.224486E+05
6	6	1.015550E+06	1.007745E+03	1.603876E+02	1.000000E+00	1.015550E+06
7	7	1.090941E+06	1.044481E+03	1.662343E+02	1.000000E+00	1.090941E+06

Table 6.8.2 FEM mass properties, free-free modes and hardmounted modes

6.8.3 1 G CHECK

MATHEMATICAL MODEL VERIFICATION RESULTS
1 G CHECK

RUN FILE NAME
1G check.dat

PARAMETERS :
PARAM AUTOSPC YES
PARAM K6ROT 1.00000
PARAM POST -2

UNITY GRAVITY LOADING CHECK
M=29.891
G=9806
Fxyz=2.931E+5
(milli-N)

OLOAD RESULTANT

SUBCASE/ LOAD DAREA/ID	TYPE	T1	T2	T3	R1	R2	R3
1	FX	2.931E+05	----	----	----	3.895E+07	-6.667E+07
	FY	----	0.000E+00	----	0.000E+00	----	0.000E+00
	FZ	----	----	0.000E+00	0.000E+00	0.000E+00	----
	MX	----	----	----	0.000E+00	----	----
	MY	----	----	----	----	0.000E+00	----
	MZ	----	----	----	----	----	0.000E+00
TOTALS		2.931E+05	0.000E+00	0.000E+00	0.000E+00	3.895E+07	-6.667E+07
2	FX	0.000E+00	----	----	----	0.000E+00	0.000E+00
	FY	----	2.931E+05	----	-3.895E+07	----	-3.256E+04
	FZ	----	----	0.000E+00	0.000E+00	0.000E+00	----
	MX	----	----	----	0.000E+00	----	----
	MY	----	----	----	----	0.000E+00	----
	MZ	----	----	----	----	----	0.000E+00
TOTALS		0.000E+00	2.931E+05	0.000E+00	-3.895E+07	0.000E+00	-3.256E+04
3	FX	0.000E+00	----	----	----	0.000E+00	0.000E+00
	FY	----	0.000E+00	----	0.000E+00	----	0.000E+00
	FZ	----	----	2.931E+05	6.667E+07	3.256E+04	----
	MX	----	----	----	0.000E+00	----	----
	MY	----	----	----	----	0.000E+00	----
	MZ	----	----	----	----	----	0.000E+00
TOTALS		0.000E+00	0.000E+00	2.931E+05	6.667E+07	3.256E+04	0.000E+00

SPCFORCE RESULTANT

SUBCASE/ DAREA ID	LOAD TYPE	T1	T2	T3	R1	R2	R3
1	FX	-2.931315E+05	----	----	----	-3.924939E+07	1.512940E+08
	FY	----	9.791984E-08	----	-1.357829E+02	----	-8.588065E+07
	FZ	----	----	8.736424E-08	4.509185E-05	3.249905E+05	----
	MX	----	----	----	1.357829E+02	----	----
	MY	----	----	----	----	-2.448672E+04	----
	MZ	----	----	----	----	----	1.259341E+06
TOTALS		-2.931315E+05	9.791984E-08	8.736424E-08	-6.845221E-07	-3.894889E+07	6.667264E+07
2	FX	-4.880349E-09	----	----	----	4.008467E+03	2.519228E-06
	FY	----	-2.931315E+05	----	3.890006E+07	----	3.349022E+04
	FZ	----	----	2.154538E-07	1.112027E-04	-3.897343E+03	----
	MX	----	----	----	4.882748E+04	----	----
	MY	----	----	----	----	-1.111235E+02	----
	MZ	----	----	----	----	----	-9.282810E+02
TOTALS		-4.880349E-09	-2.931315E+05	2.154538E-07	3.894889E+07	7.629395E-06	3.256194E+04
3	FX	8.536153E-07	----	----	----	-8.573276E+03	-4.405789E-04
	FY	----	1.105509E-06	----	8.719320E+07	----	-5.770353E+02
	FZ	----	----	-2.931315E+05	-1.512940E+08	-2.296127E+04	----
	MX	----	----	----	-2.571892E+06	----	----
	MY	----	----	----	----	-1.027397E+03	----
	MZ	----	----	----	----	----	5.770356E+02
TOTALS		8.536153E-07	1.105509E-06	-2.931315E+05	-6.667264E+07	-3.256194E+04	-1.354031E-04

EPSILON

LOAD SEQ. NO.	EPSILON	EXTERNAL WORK
1	2.1649609E-12	3.5450705E+02
2	-2.1896992E-12	1.7626004E+02
3	-5.6074373E-12	1.4075491E+03

Table 6.8.3 FEM 1G check

6.8.4 STRAIN ENERGY CHECK

MATHEMATICAL MODEL VERIFICATION RESULTS
STRAIN ENERGY CHECK

RUN FILE NAME:
Groundcheck.dat

COMMAND:
GROUNDCHECK(SET=ALL) =YES

STRAIN ENERGY CHECK

RESULTS OF RIGID BODY CHECKS OF MATRIX KGG (G-SET) FOLLOW:
PRINT RESULTS IN ALL SIX DIRECTIONS AGAINST THE LIMIT OF 9.847071E-01

DIRECTION	STRAIN ENERGY	PASS/FAIL
1	4.419487E-04	PASS
2	8.728082E-05	PASS
3	1.798275E-03	PASS
4	1.136025E-04	PASS
5	1.225917E-05	PASS
6	8.638448E-05	PASS

RESULTS OF RIGID BODY CHECKS OF MATRIX KNN (N-SET) FOLLOW:
PRINT RESULTS IN ALL SIX DIRECTIONS AGAINST THE LIMIT OF 9.847071E-01

DIRECTION	STRAIN ENERGY	PASS/FAIL
1	4.418054E-04	PASS
2	8.969539E-05	PASS
3	1.792769E-03	PASS
4	1.135099E-04	PASS
5	1.221404E-05	PASS
6	8.679042E-05	PASS

RESULTS OF RIGID BODY CHECKS OF MATRIX KNN+AUTO (N+AUTOSPC-SET) FOLLOW:
PRINT RESULTS IN ALL SIX DIRECTIONS AGAINST THE LIMIT OF 9.847071E-01

DIRECTION	STRAIN ENERGY	PASS/FAIL
1	4.418054E-04	PASS
2	8.969539E-05	PASS
3	1.792769E-03	PASS
4	1.135099E-04	PASS
5	1.221404E-05	PASS
6	8.679042E-05	PASS

RESULTS OF RIGID BODY CHECKS OF MATRIX KFF (F-SET) FOLLOW:
PRINT RESULTS IN ALL SIX DIRECTIONS AGAINST THE LIMIT OF 9.847071E-01

DIRECTION	STRAIN ENERGY	PASS/FAIL
1	4.418054E-04	PASS
2	8.969539E-05	PASS
3	1.792769E-03	PASS
4	1.135099E-04	PASS
5	1.221404E-05	PASS
6	8.679042E-05	PASS

RESULTS OF RIGID BODY CHECKS OF MATRIX KAA1 (A-SET) FOLLOW:
PRINT RESULTS IN ALL SIX DIRECTIONS AGAINST THE LIMIT OF 9.847071E-01

DIRECTION	STRAIN ENERGY	PASS/FAIL
1	4.418054E-04	PASS
2	8.969539E-05	PASS
3	1.792769E-03	PASS
4	1.135099E-04	PASS
5	1.221404E-05	PASS
6	8.679042E-05	PASS

Table 6.8.4 FEM strain energy check

7. DIMENSIONING LOADS

7.1 DEFINITION OF STATIC AND DYNAMIC LOAD

For ACOP locker configuration, we use most severe load casess about low frequency load factor list in SSP-52000-IDD-ERP section 4.1.2 and random vibration load spectrum list in section 4.3, and use the methodology of load combination defined in SSP 52005C section 4.2 to calculate load cases used in this report. Load cases abstracted from SSP 52000-IDD-ERP and combination load factors are briefly described as following section.

7.1.1 EXPRESS RACK DESIGN LOAD FACTORS

EXPRESS Rack mounted payload hardware shall be designed to maintain positive margins of safety during liftoff and landing acceleration conditions as defined in Table 7.1.1A for early design. EXPRESS Rack random vibration loads defined in Table 7.1.1B shall combine with the low frequency launch load factors.

FLIGHT EVENT	DESIGN LIMIT LOAD FACTORS, G's			COORDINATE SYSTEM
	X-AXIS	Y-AXIS	Z-AXIS	
Liftoff Landing	± 7.70 ± 5.40	± 11.60 ±7.70	± 9.90 ± 8.80	ISPR(1)

(1) The orientation of ISPR coordinate system is the same as that used in FE model.

Table 7.1.1A EXPRESS rack design load factors

The low frequency loads at liftoff must be combined with loads due to the launch random vibration environment as directed in Table 7.1.1B

PAYLOAD LOCATION	FREQUENCY	LEVEL
Backplate Mounted	20 Hz 20-80 Hz 80-120 Hz 120-2000 Hz 2000 Hz Composite	$0.01g^2$/Hz +3.0dB/oct $.04g^2$/Hz -4.0dB/oct $.00095g^2$/Hz 3.5 g_{rms}

Table 7.1.1B EXPRESS rack payload equipment high frequency random vibration launch environment

A normal modes solution with the boundary constrained in the flight configuration is evaluated in the PSD range (20~2000Hz). Identify all modes that have significant effective mass in each axis. The sum of the effective mass of the significant modes in each axis is added up to at least 80 percent of the total mass.
Calculate the random vibration load factor (RVLF) using the Miles formula for each significant mode: (Here Q=10.)

$$RVLF_i = 3\sqrt{\tfrac{p}{2} \cdot f_i \cdot Q \cdot PSD_i} \qquad PSD_i = PSD_1 (f_i / f_1)^{0.3322*S}$$

Calculate the mass-weighted $RVLF_w$ for each $RVLF_i$, The significant effective masses of modes are list in Table 9.2.

$$RVLF_{i(w)} = RVLF_i \frac{m_{eff,i}}{\sum_i m_{eff,i}}$$

Root-sum-square all of the mass-weighted RVLFs.

$$RVLF = \sqrt{\sum_i (RVLF_{i(w)})^2}$$

By using the load combination criteria defined in SSP 52005 section 4.2.1, load cases of EXPRESS rack are list in Table 7.1.1C.

LOAD CASE NO.	DESIGN LIMIT LOAD FACTORS, G's		
	X-AXIS	Y-AXIS	Z-AXIS
Liftoff			
1~8	16.694,-16.345	± 11.60	± 9.90
9~16	± 7.70	± 21.956	± 9.90
17~24	± 7.70	± 11.60	± 21.738
Landing			
25~32	± 5.40	±7.70	± 8.80

Table 7.1.1C Combination of EXPRESS Rack load cases

Because load factors of landing case are smaller than those of liftoff load cases, landing load factors are not checked in this report.

7.1.2 MIDDECK EMERGENCY LANDING LOAD FACTORS

Another loads considered in this report are Middeck emergency landing loads listed in following table.

Load Case	ULTIMATE INERTIA LOAD FACTORS		
No.	X-Axis	Y-Axis	Z-Axis
33~40	+20.0 -3.3	+3.3 -3.3	+10.0 -4.4

Note:

1 Sign convention follows that of the crew module coordinate system shown in SSP 52000-IDD-ERP Figure 4-1.
2 Emergency landing load factors are ultimate.
3 Emergency landing load factors operate independently.
4. Load factors are defined as opposite in sign from accelerations.

Table 7.1.2 Middeck emergency landing load factors

8. DIMENSIONING RULES

8.1 SAFETY FACTORS

The structural factors of safety in Table 8.1.1 shall be applied to the EXPRESS Rack load factors during the payload analysis. In this report, we conservatively use factor of safety 1.25 for yield and 2.0 for ultimate.

CATEGORY		FACTOR OF SAFETY	
		YIELD	ULTIMATE
Metallic Structures	Untested Shuttle (analysis only)	1.25	2.0
	Untested On-Orbit (analysis only)	1.25	2.0
	Tested Shuttle (analysis and test)	1.0	1.4
	Tested On-Orbit (analysis and test)	1.1	1.5

Table 8.1.1 Factors of safety for express rack payload analysis

The structural factors of safety in Table 8.1.2 shall be applied to the middeck load factors during the payload analysis.

ANALYSIS	ULTIMATE FACTOR OF SAFETY
Payload Structure	1.4

Table 8.1.2 Factors of safety for middeck payload analysis

8.2 TEMPERATURE DERATING FACTOR

The tensile yield strength for aluminum (7075-T7351) is reduced by a factor of 0.97 when the reference temperature is modified to 120 ? F that suggested in SSP 52000-IDD-ERP Table 5-I. Material properties at the elevated temperature are obtained from MIL-HDBK-5.

8.3 MARGINS OF SAFETY FOR STRUCTURE

A margin of safety of structure is defined as the decimal fraction as defined in the equation below:

$$MoS_u = \frac{P_u}{P \times FS_u} - 1 \qquad MoS_y = \frac{P_y}{P \times FS_y} - 1$$

Where:

FSu = Ultimate Factor of Safety
FSy = Yield Factor of Safety
P = Limit Load (or stress) calculated in the analysis
Pu = Load (or stress) at which material failure will occur
Py = Load (or stress) at which material yielding will occur
MoSu = Margin of Safety against ultimate failure
MoSy = Margin of Safety against material yielding

It is required that MoS are positive for all structures in all combined loading conditions.
A detail description of margin of safety of fastener calculation will be in the chapter relevant to joint analysis.

9. DYNAMIC ANALYSIS

In this section the definition of dynamic verification and results of natural frequencies, mode shapes and effective masses are included.

9.1 DEFINITION OF DYNAMIC VERIFICATION

- In SSP-52000-IDD-ERP section 4.1.1, the minimum natural frequency of hard mounted payloads is required by:
- EXPRESS payload components hard mounted during launch and landing flight events shall have a first primary natural frequency equal to or exceeding 35 Hz when rigidly constrained at the component to rack interface.
- Middeck payload components hard mounted during launch and landing flight events shall have a first primary natural frequency equal to or exceeding 30 Hz with respect to the Orbiter attachment interface.

9.2 EIGENFREQUENCIES AND MODE SHAPES

The first 60 natural modes of ACOP crate are :

Mode	Freq [Hz]	Mode	Freq [Hz]	Mode	Freq [Hz]
1	83.6	21	301.8	41	451.5
2	88.7	22	311.5	42	457.4
3	89.5	23	331.5	43	457.7
4	89.9	24	333.1	44	459.8
5	152.9	25	334.5	45	477.4
6	160.4	26	341.3	46	477.6
7	166.2	27	348.8	47	482.0
8	176.5	28	368.3	48	497.3
9	177.1	29	371.3	49	502.3
10	178.0	30	391.7	50	508.6
11	220.8	31	397.6	51	509.6
12	235.1	32	398.6	52	521.9
13	236.4	33	399.7	53	524.3
14	236.8	34	400.0	54	542.6
15	241.6	35	402.1	55	544.1
16	241.9	36	408.8	56	544.4
17	276.5	37	418.5	57	545.2
18	286.3	38	418.7	58	547.1
19	288.6	39	426.3	59	556.6
20	293.4	40	434.7	60	557.0

Table 9.1 First 60 modes frequencies

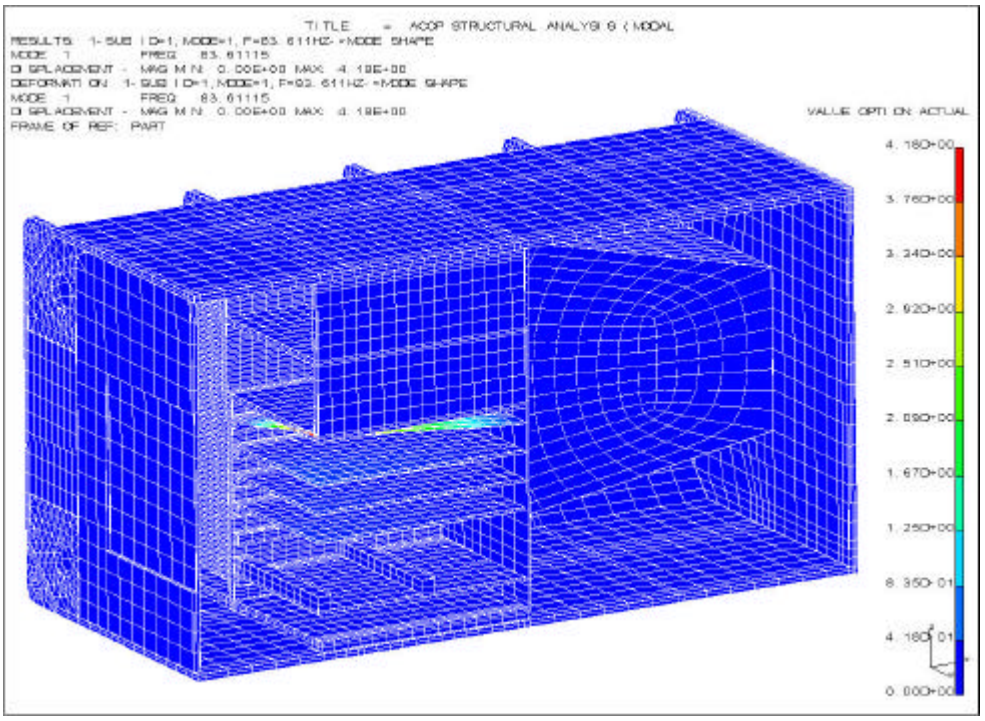

Figure 9.1.1 1st mode shape, 83.6 Hz (local mode of the slot-1 board)

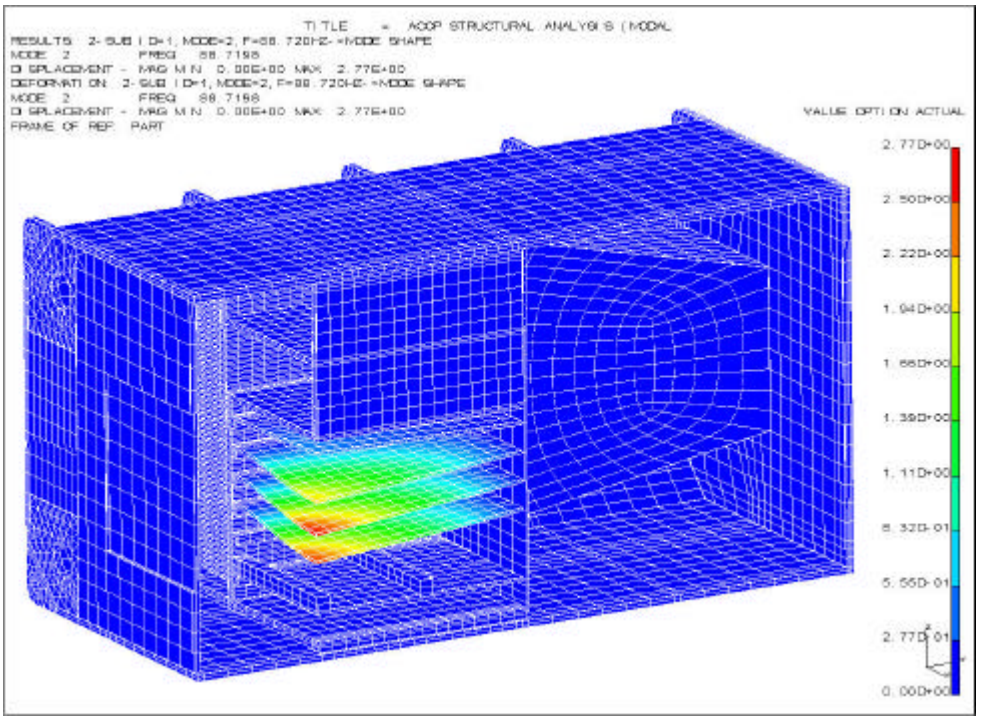

Figure 9.1.2 2nd mode shape, 88.7 Hz (local mode of the electronic boards)

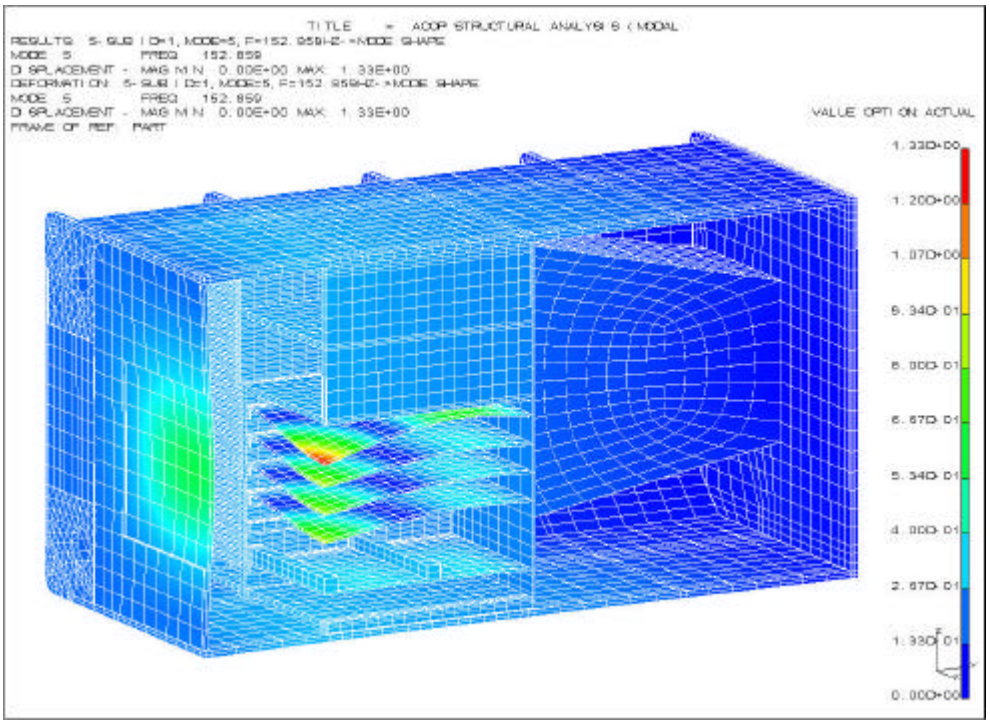

Figure 9.1.3 5th mode shape, 152.9 Hz (local mode of the electronic boards)

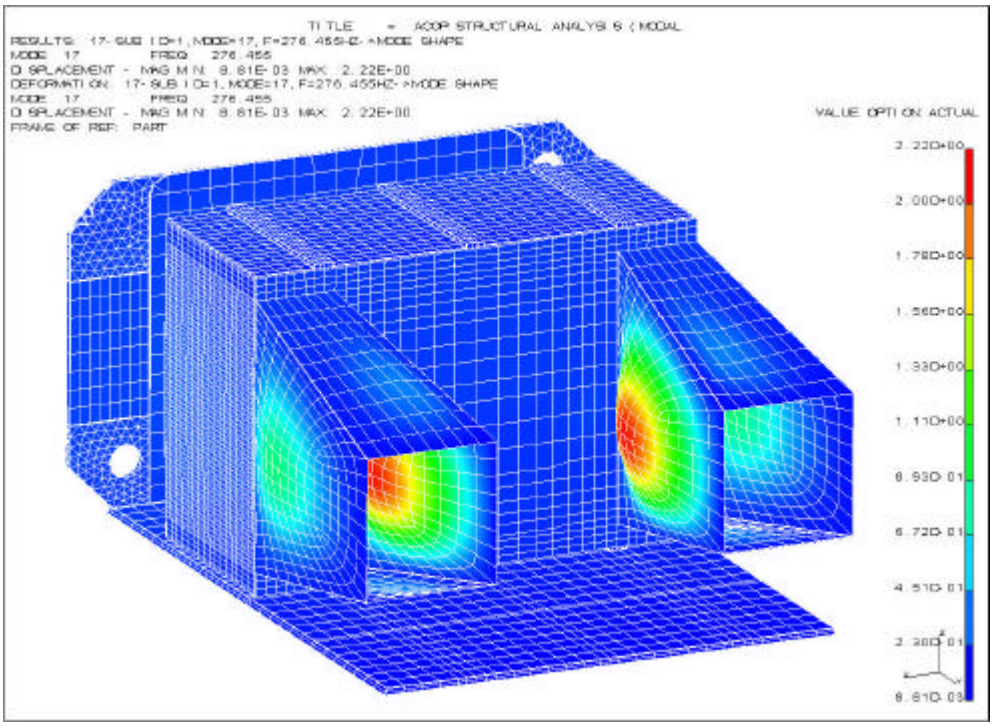

Figure 9.1.4 17th mode shape, 276.5 Hz (mode of air in/outlet side panel)

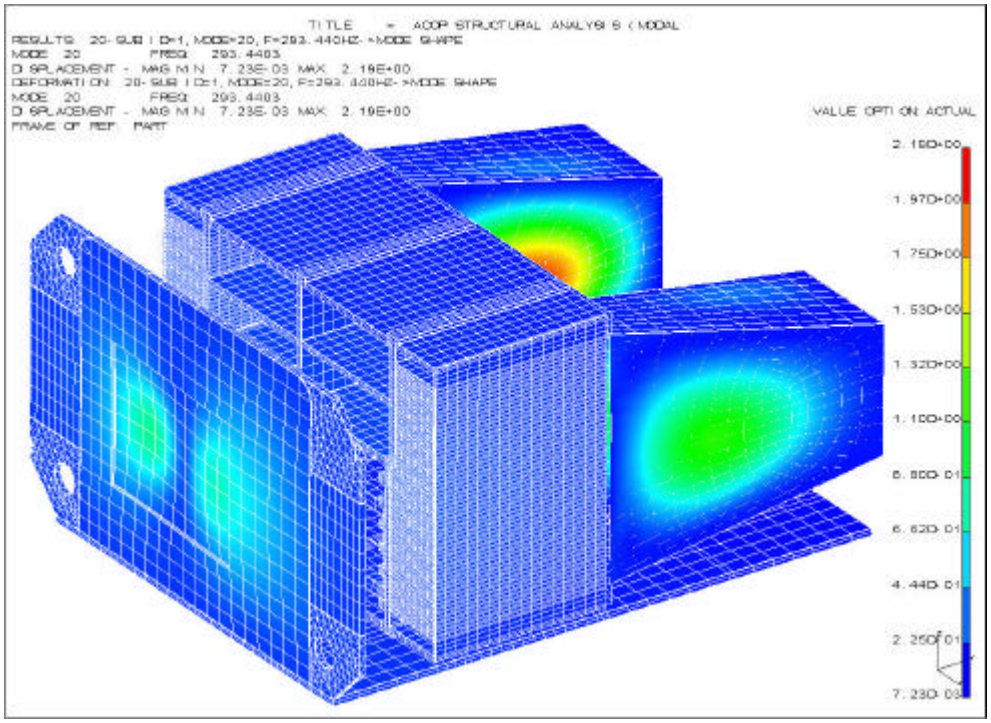

Figure 9.1.5 20th mode shape, 293.4 Hz (mode of air in/outlet side panel and front panel)

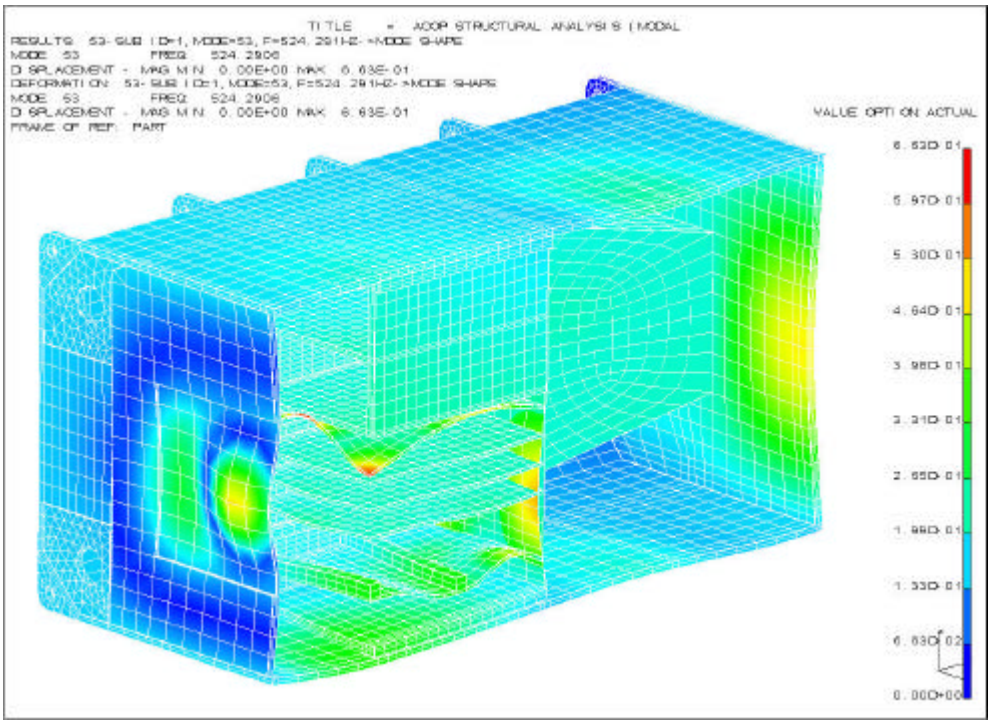

Figure 9.1.6 53th mode shape, 524.3 Hz (global mode in Y axis)

9.3 EFFECTIVE MASS

The following table shows the modes with the significant effective mass added up to 80 % of the total mass in each axis.

		X	Y	Z	X	Y	Z
Mode	Frequency(Hz)	Fraction	Fraction	Fraction	Effmass(kg)	Effmass(kg)	Effmass(kg)
1	83.61	<1%	<1%	2.05%			0.613
2	88.72	<1%	<1%	4.06%			1.214
5	152.86	<1%	<1%	61.67%			18.433
6	160.39	<1%	3.30%	4.30%		0.986	1.285
7	166.23	<1%	<1%	3.57%			1.067
9	177.05	<1%	<1%	2.45%			0.732
17	276.46	47.40%	<1%	<1%	14.168		
20	293.44	19.57%	<1%	<1%	5.850		
21	301.78	7.83%	<1%	<1%	2.340		
36	408.83	<1%	4.23%	<1%		1.264	
40	434.74	<1%	<1%	1.16%			0.347
53	524.29	<1%	75.22%	<1%		22.484	
135	952.29	1.70%	<1%	<1%	0.508		
150	1038.12	2.84%	<1%	<1%	0.849		
151	1042.98	1.34%	<1%	<1%	0.400		
174	1154.02	<1%	<1%	1.09%			0.326
Model mass = 29.891kg							
SUM		80.68%	82.75%	80.35%	24.115	24.734	24.014

Table 9.2.1 The significant effective mass added up to at least 80 percent of the total mass in each axis

The modes with significant effective mass are shown as figure 9.2.1. The cumulative effective masses for all axes are shown as figure 9.2.2.

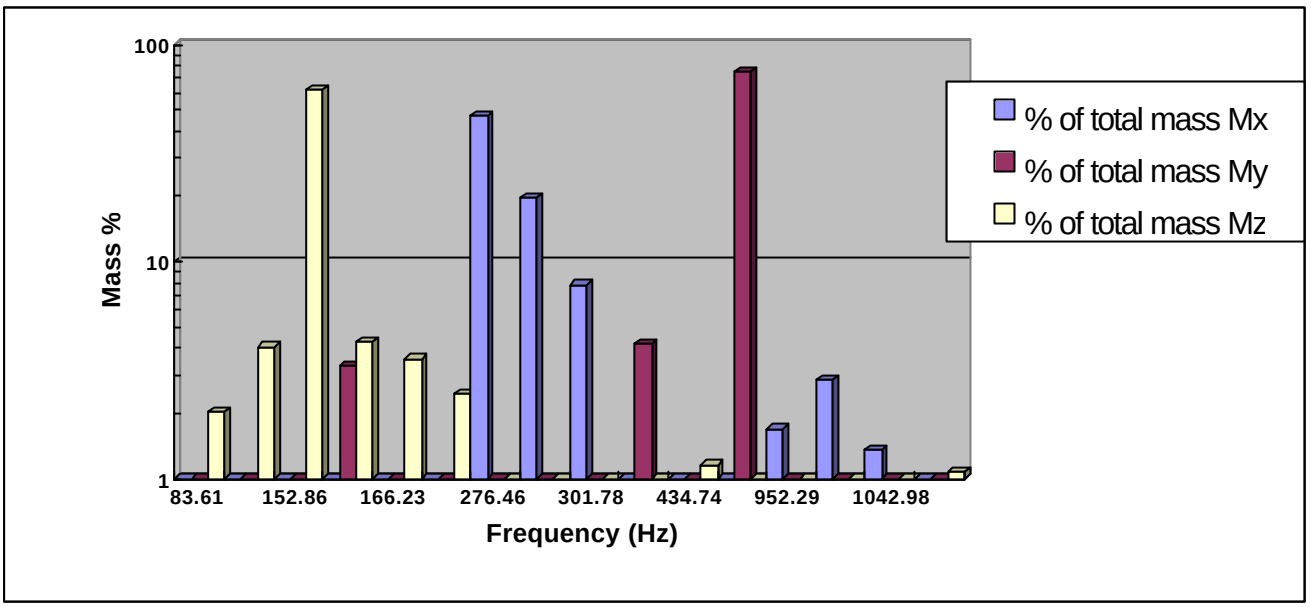

Figure 9.2.1 Distribution of the modes with significant effective mass

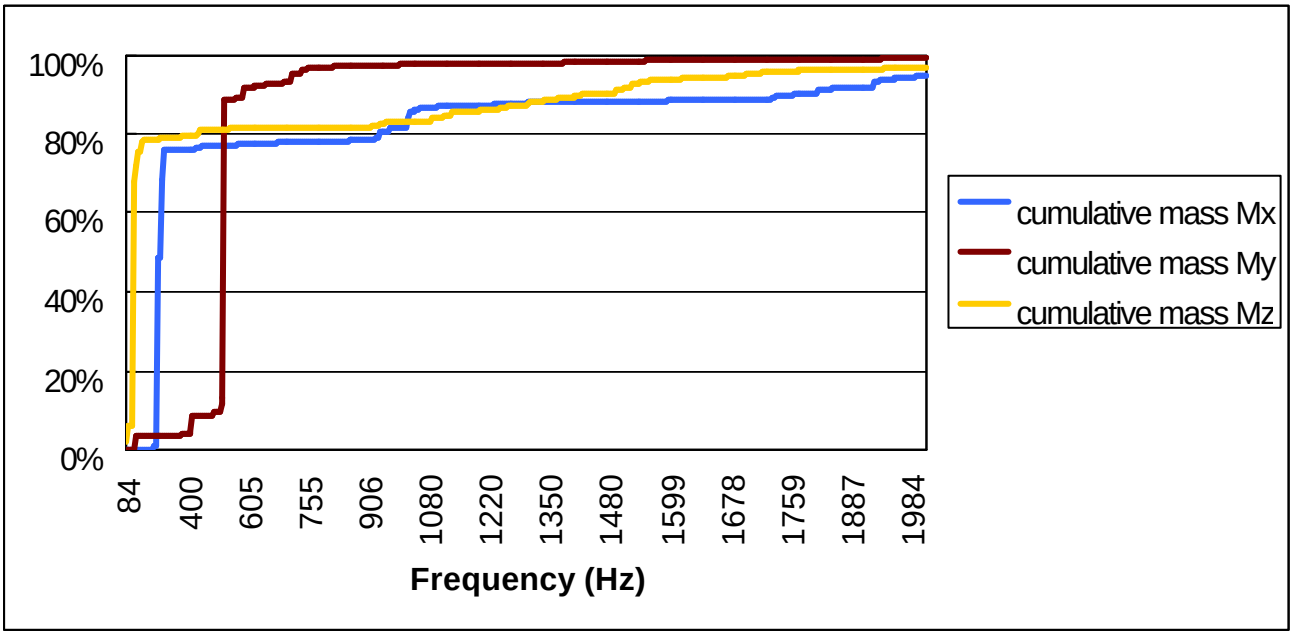

Figure 9.2.2 Cumulative effective masses for all axes

10. STATIC ANALYSIS

This section presents the results of static analysis of ACOP crate in the load calculated in section 7.2. The maximum displacements and stresses of each part of ACOP crate are listed and shown as followings.

10.1 DISPLACEMENT ANALYSIS

The maximum displacements of each part are listed in Table 10.1.1 and shown as figure 10.1.1~10.1.4.

Load case	Maximum displacement x 10^{-4} (m)				
	Locker	Chassis	Ducts	PCBs	Front LCD
10	---	---	---	---	4.211
17	3.09	3.09	---	16.22	---
19	---	---	2.404	---	---

Table 10.1.1 Maximum displacement of each part

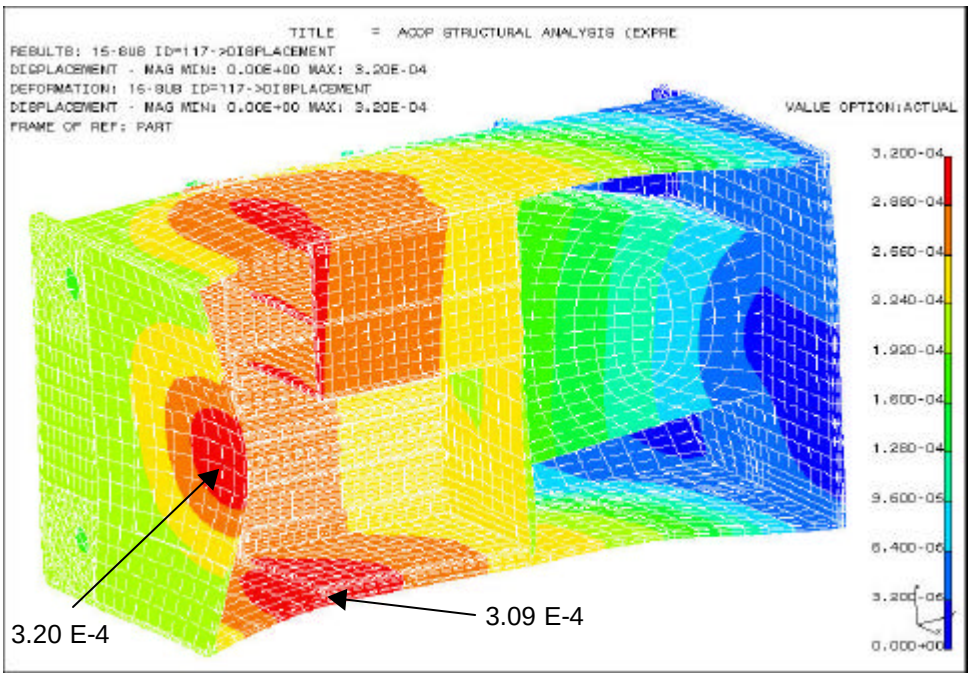

Figure 10.1.1 Maximum displacement of locker and chassis, load case 17

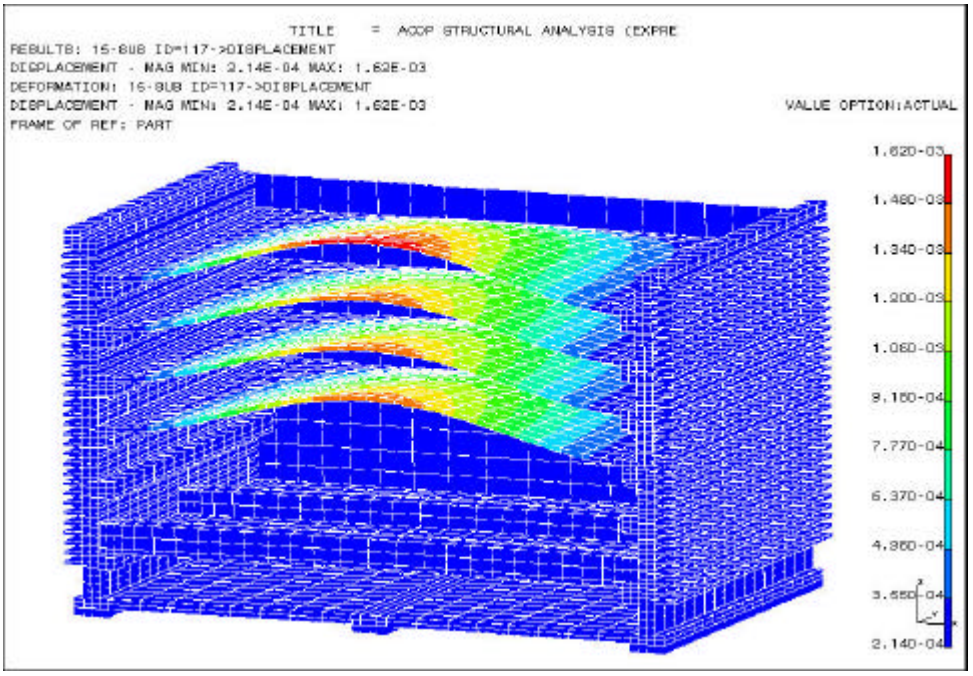

Figure 10.1.2 Maximum displacement of PCBs, load case 17

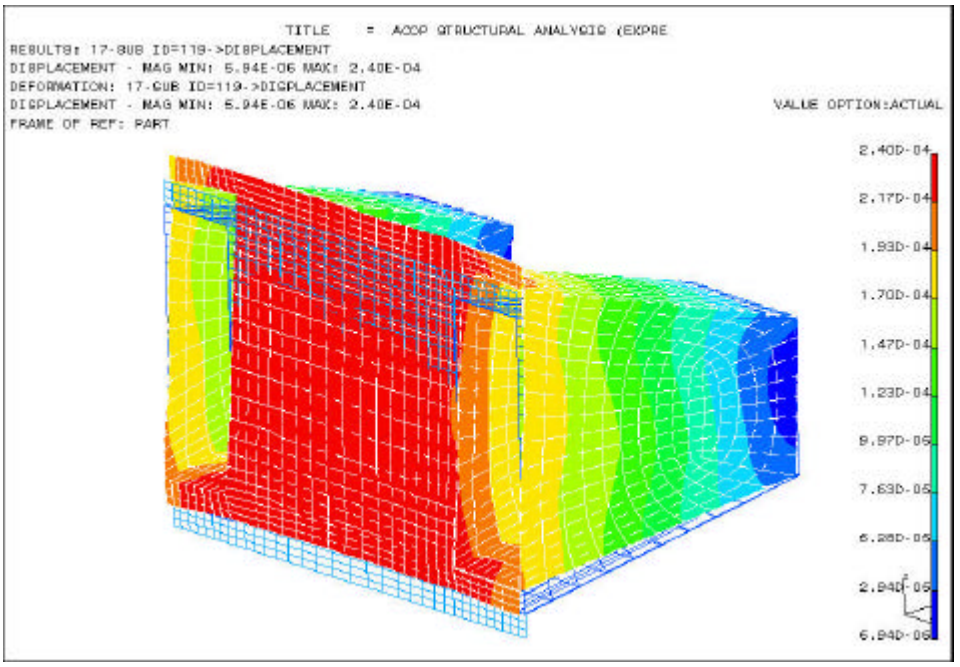

Figure 10.1.3 Maximum displacement of duct, load case 19

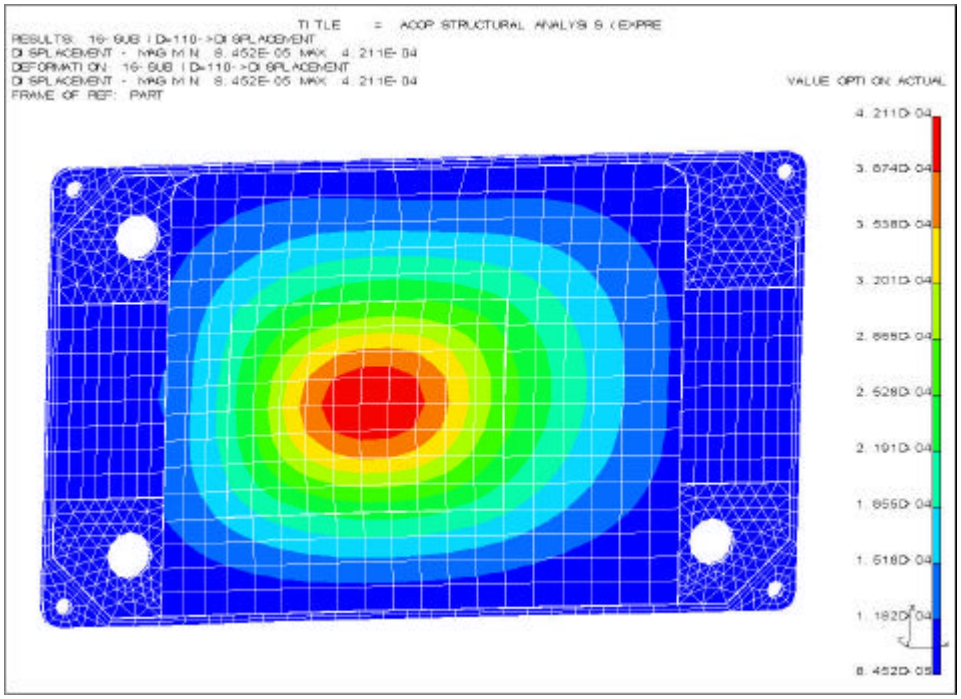

Figure 10.1.4 Maximum displacement of front LCD, load case 10

10.2 STRESS ANALYSIS

The maximum von Mises stresses of each part are listed in Table 10.2.1 and shown as figure 10.2.1~10.2.5.

Load case	Maximum stress (MPa)									
	Locker		Chassis		Ducts		PCBs		Front LCD	
	NID	Stress	NID	Stress	EID	Stress	NID	Stress	NID	Stress
12	---	---	---	---	---	---	---	---	N63655	19.37
17	---	---	---	---	E22008	41.04	N18379	13.49	---	---
20	N76999	163.9	N59029	147.5	---	---	---	---	---	---

NID : node identification number with max. stress in FE model.
EID : element identification number with max. stress in FE model.

Table 10.2.1 Maximum displacement of each part

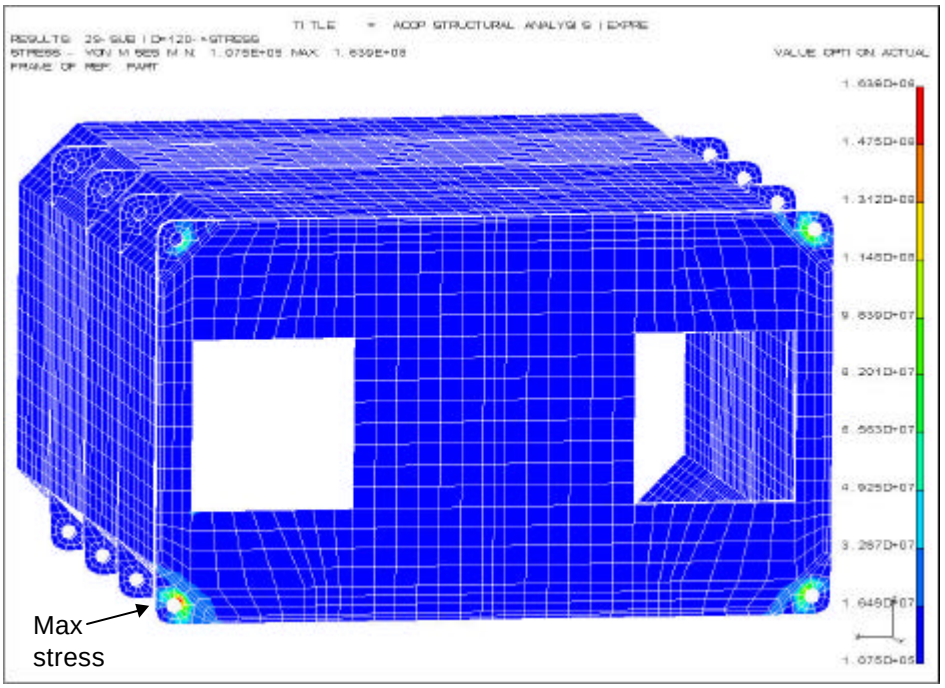

Figure 10.2.1 Max stress in locker, 163.9 MPa for load case 20.

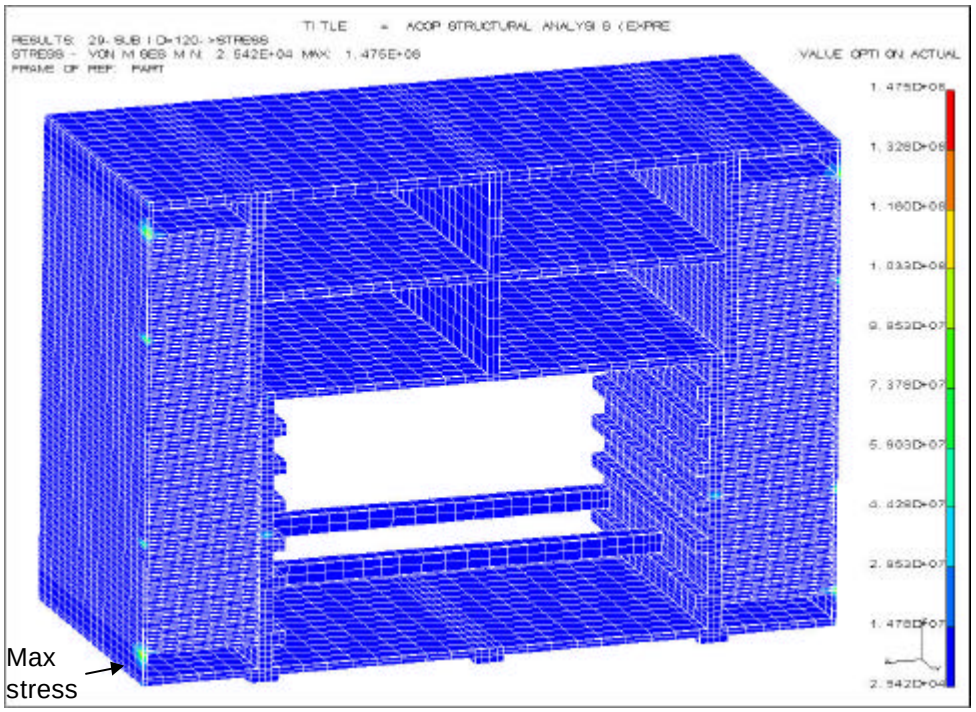

Figure 10.2.2 Max stress in chassis, 147.5 MPa for load case 20.

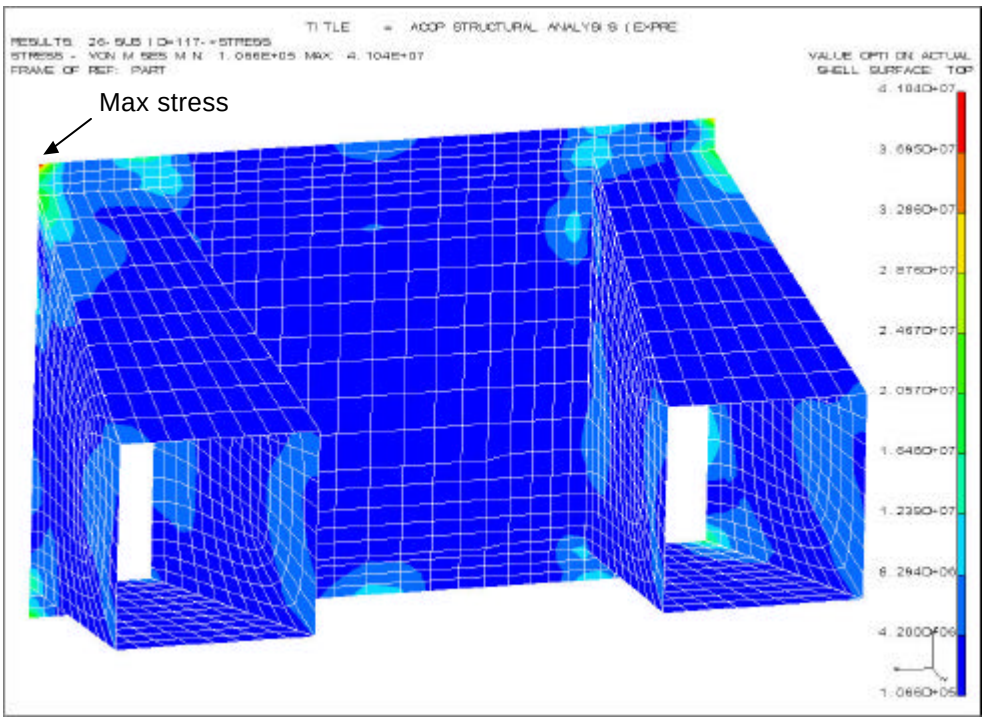

Figure 10.2.3 Max stress in ducts, 41.04 MPa for load case 17.

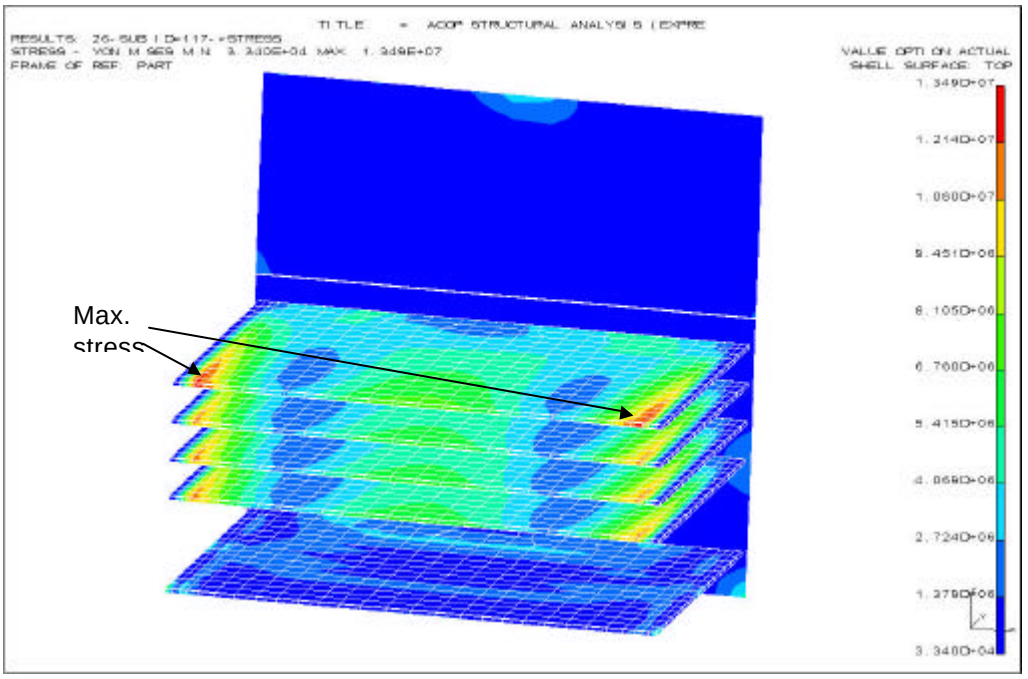

Figure 10.2.4 Max stress in PCBs, 13.49 MPa for load case 17.

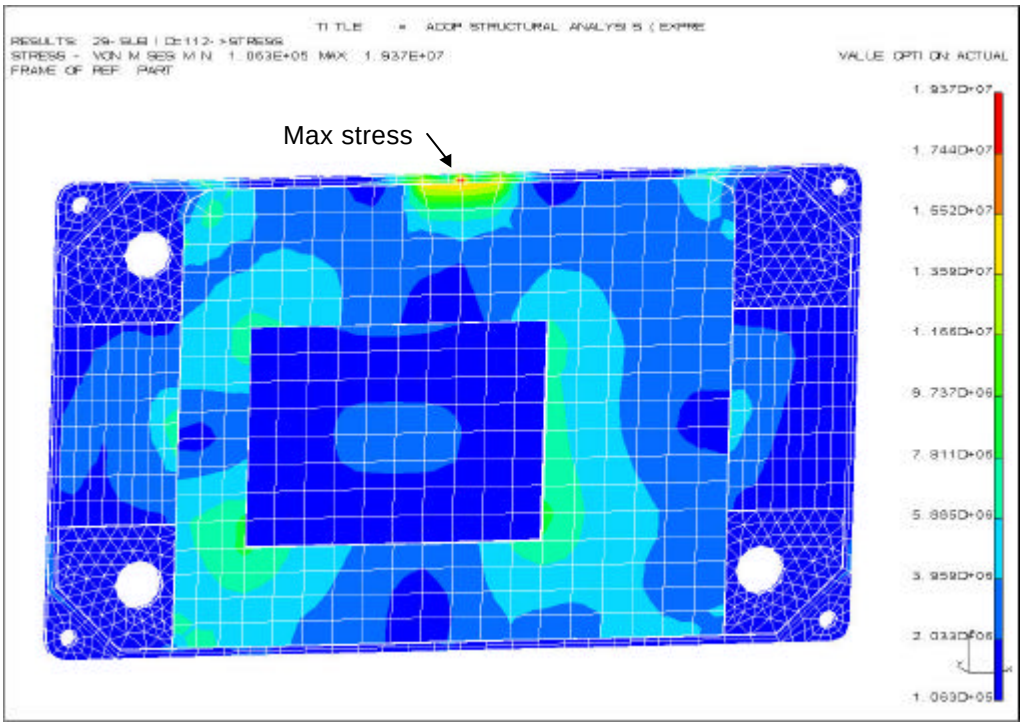

Figure 10.2.5 Max stress in front LCD, 19.37 MPa for load case 12

10.3 JOINT ANALYSIS

At corners of locker backplate, four sleeve bolt receptacles are used to fasten ACOP structure and EXPRESS rack backplate together. This section gives a description of results of these four joint analyses.

10.3.1 NOMINAL CONFIGURATION

From FE static analysis we can get the reaction forces of these four joints. The most critical reaction forces from static analysis results are list in Table 10.3.1. And the joint ID is defined as figure 10.3.1.

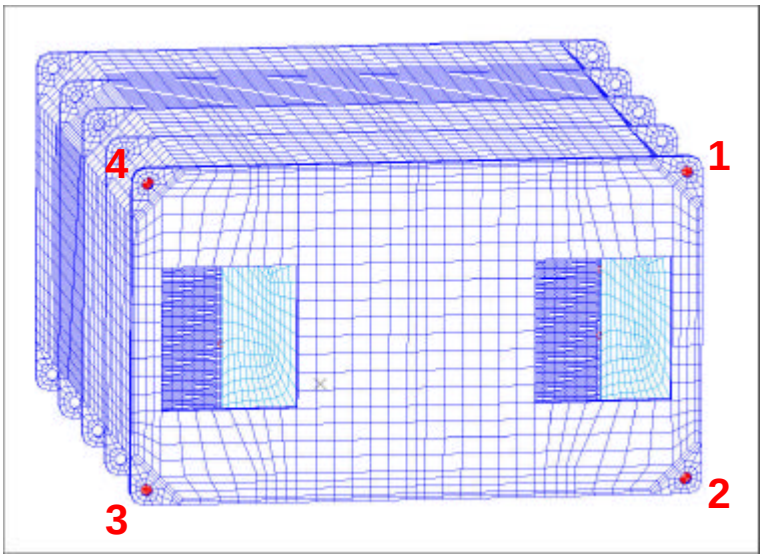

Figure 10.3.1 Identification number of joints

Load case	Reaction forces from FE static analysis (N)							
	Joint 1		Joint 2		Joint 3		Joint 4	
	Tensile	Shear	Tensile	Shear	Tensile	Shear	Tensile	Shear
19	---	---	5455.02	2487.35	---	---	---	---
20	---	---	---	---	5464.58	2486.98	---	---
23	5394.49	2521.54	---	---	---	---	---	---
24	---	---	---	---	---	---	5404.60	2521.18

Table 10.3.1 Maximum reaction force of each joint

In the Table 10.3.2 the definition of joint MoS is presented.

MoS	Description
MoS sep	Margin of Safety for separation
MoS combU	Margin of Safety for combined load bolt ultimate
MoS bry	Margin of Safety for bearing yield
MoS bru	Margin of Safety for bearing ultimate
MoS lug ty	Margin of Safety for tension failure yield
MoS lug tu	Margin of Safety for tension failure ultimate
MoS lug sy	Margin of Safety for shear out failure yield
MoS lug su	Margin of Safety for shear out failure ultimate
MoS insert	Margin of Safety for the insert

Table 10.3.2 MoS definition

10.3.1.1 BOLT ANALYSIS

With reaction forces the MoSs of joint analysis are calculated and listed in the Table 10.3.3. A detail procedure of calculation step by step is list in annex.

JOINT DEFINITION	VALUE			
Bolt size	NAS 1351N4			
Nominal diameter (mm)	6.35			
Thread pitch (1/in)	28			
Bolt material	A-286 (u: 160 ksi, y: 119 ksi)			
Bolt material FTU (MPa)	1103			
Bolt material FTY (MPa)	820.5			
Bolt material FSU (MPa)	661.8			
Temperature correction factor	0.97			
Fitting-factor	1.15			
Dry torque coefficient	0.2			
Loading plane factor	0.5			
Joint load factor (steel bolt on Alum. plate)	0.266			
Plate material	AL 7075-T7351			
Plate thickness (mm)	6.3			
BEARING AND LUG DATA				
Distance hole-end plate (lug an. Tension)	7.7			
Distance hole-end plate (lug an. Shear)	7.7			
Plate FBRU (MPa)	710.2			
Plate FBRY (MPa)	558.49			
Lug Ftu (MPa)	468.9			
Lug Fty (MPa)	393			
Lug Fsu (MPa)	262			
Lug Fsy (MPa)	151			
LOAD DEFINITION	**JOINT-1**	**JOINT-2**	**JOINT-3**	**JOINT-4**
Axial load (N)	5394.49	5455.02	5464.58	5404.60
Shear load (N)	2521.54	2487.35	2486.98	2521.18
Bending (m-N)	0	0	0	0
RESULTS				
Max torque (m-N)	18.339	18.339	18.339	18.339
Min torque (m-N)	15.589	15.589	15.589	15.589
MoS sep	0.524	0.518	0.518	0.523
MoS combU	0.386	0.390	0.390	0.386
MoS bry	5.876	5.970	5.971	5.877
MoS bru	4.465	4.540	4.451	4.466
MoS lug ty	10.734	10.895	10.897	10.735
MoS lug tu	7.749	7.869	7.871	7.750
MoS lug sy	3.509	3.570	3.571	3.509
MoS lug su	3.889	3.956	3.957	3.890

Table 10.3.3 Joint analysis input and output data

10.3.1.2 INSERT ANALYSIS

The ACOP interface is made using the configuration A defined in AD1 (section 3.4.3.6.2.1). In this configuration the attachment point is as the follow figure shown. The bolt of this interface has been checked in the previous section, and all MoS's of the bolt verification are positive. In this section the receptacle will be checked by insert analysis.

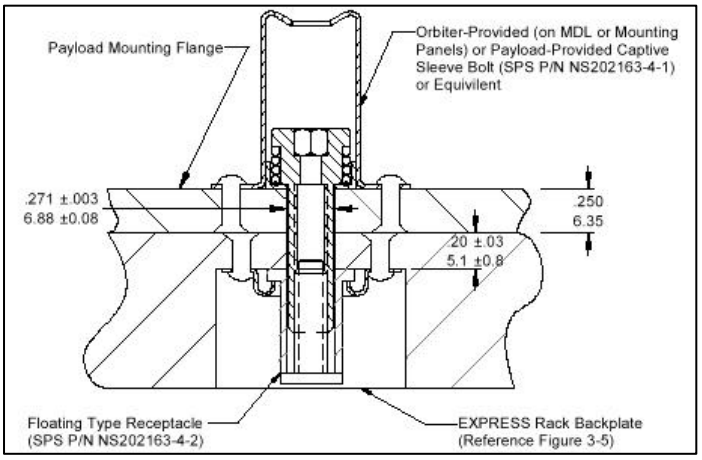

Figure 10.3.2 EXPRESS Rack backplate attachment point details.(from AD1)

And the allowable forces of Type A joint are shown as the following table.

BACK PLATE INTERFACE	INTERFACE CONFIGURATION	ULTIMATE FORCE ALLOWABLES	
		TENSILE (lbf)	SHEAR (lbf)
Type A	Sleeve Bolt Receptacle P/N SPS 202163-4-2	2500[1]	1660[1]
Type B	Threaded Insert P/N MS51831CA-202	8900[2]	19600[2]

Notes:

1. Sleeve bolt limits based on manufacturer's specification SPS NS202163-4.
2. Insert limits exceed 160ksi bolt strength.

Table. 10.3.4 EXPRESS rack backplate inerface force allowables

After calculating like bolt analysis, MoS for insert is negative.

$Ftens := 5404newton$ $\quad$ $Fshear := 2521.18newton$

$Ftens = 1.215 \times 10^3 lbf$ $\quad$ $Fshear = 566.784 lbf$

$Alltens := 2500lbf$ $\quad$ $Allsh := 1660lbf$

$Alltens = 1.112 \times 10^4 N$ $\quad$ $Allsh = 7.384 \times 10^3 N$

$\alpha c := .97$

$FSu := 2$

Tensile ratio: $Rt := \frac{Ftens \cdot FSu}{Alltens \cdot \alpha c}$ $\quad$ $Rt = 1.002$

Shear ratio: $Rs := \frac{FSu \cdot Fshear}{Allsh \cdot \alpha c}$ $\quad$ $Rs = 0.704$

Calculate Margins of safety:

Guess K $\quad$ $K := 1.0$

Given

$(K \cdot Rs)^2 + (K \cdot Rt)^2 = 1$ $\quad$ $K := Find(K)$

Margin of safety: $MoSinsert := K - 1$ $\quad$ $MoSinsert = -0.183$

ACOP mechanical design may use suggestions as followings for improvement:

Use Type B interface to increase MoS for insert with higher ultimate force allowables.
Move the chassis assembly toward the backplate of EXPRESS rack, then the load will be reduced.
Reduce the weight of ACOP locker, then the load due to the random vibration will be also reduced .

10.4 MOS SUMMARY FOR STRESS ANALYSIS

The following table presents the summary of the margins of safety of the entire ACOP crate. In the table the values of Fty and Ftu have degraded by a factor of 0.97.

MARGINS OF SAFETY FOR STRESS ANALYSIS										
ITEM	LC	NID EID	MATERIAL	Fty	Ftu	Limit stress [Mpa]	$S.F._Y$	$S.F._U$	MoS_Y	MoS_U
Chassis	20	N59029	AL 7075 T7351	381.2	454.8	1.475E+02	1.25	2.0	1.068	0.542
Ducts	17	E22008	AL 7075 T7351	381.2	454.8	4.104E+01	1.25	2.0	6.431	4.541
Front Panel + LCD	12	N63655	AL 7075 T7351	381.2	454.8	1.937E+01	1.25	2.0	14.744	10.741
Locker	20	N76999	AL 7075 T7351	381.2	454.8	1.639E+02	1.25	2.0	0.861	0.388
PCB	17	N18379	FR4	NA	200	1.349E+01	NA	2.0	NA	6.191

Table 10.4.1 MoS for stress analysis for the entire model

All MoS are positive for the worst loading case. The minimum MoS is 0.388 occurred at a fastener hole of locker backplate for ultimate stress.

10.5 MOS SUMMARY FOR JOINT ANALYSIS

The following table presents the summary of the MoS of bolts in the ACOP crate.

MoS Type	MoS Value	Joint ID
MoS sep	0.518	2, 3
MoS combU	0.386	1, 4
MoS bry	5.88	1, 4
MoS bru	4.47	1, 4
MoS lug ty	10.74	1, 4
MoS lug tu	7.75	1, 4
MoS lug sy	3.509	1, 4
MoS lug su	3.89	1, 4
MoSinsert	-0.183	4

Table 10.5.1 MoS for bolt analysis

All MoSs of bolt are positive for the worst load case. The minimum MoS of bolts is 0.386 occurred at joint 1 or joint 4 for the combined ultimate load.

The MoS of insert is negative for the worst load case. The MoS is –0.183

11. CONCLUSIONS AND COMMENTS

In this report we perform the dynamic, stress and joint analyses to verify the ACOP crate structural safety.

For the dynamic verification the first natural frequency of the ACOP crate is 83.6 Hz that is greater than 35 Hz (see chapter 9). It is compliant with the structural requirement (see chapter 7).

The MoS are positive for all applied loads and compliant with the structural requirement (see chapter 7) except for the insert analysis:

For the stress verification the minimum MoS is 0.388 occurred at a fastener hole of locker backplate for ultimate stress (see chapter 10.2 & 10.4).

For the bolt verification of the joint the minimum MoS is 0.386 occurred at joint 1 or joint 4 for the combined ultimate load. (see chapter 10.3 & 10.5).

For the insert verification of the joint the minimum MoS is –0.183 It will be increased to positive value by the suggestion in chapter 10.3.1.2

CONNECTION "ACOP INTERFACE":

(MAS 1351N4 Material A 286 @ 160KSI

FACTORS of SAFETY Ultimate: $FSu := 2.0$ Yield: $FSy := 1.25$ Separation: $FSsep := 1.25$

Nominal diameter: $D := .25\,in$ Thread pitch: $N := 28 \cdot \frac{1}{in}$

$D = 6.350\,mm$

Temperature correction factor: $\alpha c := .97$

Tensile allowable, ultimate: $Ftu := 160000\,psi$ Shear allowable: $Fsu := Ftu \cdot 0.6$

$Ftu = 1.103 \times 10^{9}\,Pa$ $Fsu = 6.619 \times 10^{8}\,Pa$

Tensile allowable, yield: $Fty := 119000\,psi$

$Fty = 8.205 \times 10^{8}\,Pa$

Tensile area: $At := \pi \cdot \left(\frac{D - 0.9743 \frac{1}{N}}{2} \right)^2$ $At = 0.0364\,in^2$ $At = 2.347 \times 10^{-5}\,m^2$

Equations for areas from Machinery's Handbook

Shear area: $As := \pi \cdot \left(\frac{D - 1.299038 \frac{1}{N}}{2} \right)^2$ $As = 0.0326\,in^2$ $As = 2.101 \times 10^{-5}\,m^2$

Moment of inertia of bolt cross section: $I := \frac{\pi \cdot D^4}{64}$ $I = 0.0002\,in^4$ $I = 7.981 \times 10^{-11}\,m^4$

distance to outer fiber: $c := \frac{D}{2}$ $c = 0.125\,in$ $c = 3.175 \times 10^{-3}\,m$

Tensile ultimate strength: $ftu := Ftu \cdot At$ $ftu = 5.820 \times 10^{3}\,lbf$ $ftu = 25.888 \times 10^{3}\,newton$

Tensile yield strength: $fty := Fty \cdot At$ $fty = 4.328 \times 10^{3}\,lbf$ $fty = 1.925 \times 10^{4}\,newton$

Shear strength: $fsu := Fsu \cdot As$ $fsu = 3.126 \times 10^{3}\,lbf$ $fsu = 1.390 \times 10^{4}\,newton$

Bending allowable: $fbu := Ftu \cdot \frac{I}{c}$ $fbu = 245.437\,in \cdot lbf$ $fbu = 27.731\,m \cdot newton$

Plastic bending factor for circular cross section: $Ky := 1.7$

Fitting-factor: $FF := 1.15$

Forces at the Bolts:

Bolt tensile force (N) : $Ften := 5394.49\,newton$

Bolt tensile force (lbf) : $Ften = 1.213 \times 10^{3}\,lbf$

Bolt shear force (N) : $Fshear := 2521.54\,newton$

Bolt shear force: $Fshear = 566.865\,lbf$

Bolt bending moment (N*m) : $Fbend := 0\,newton \cdot m$

Bolt bending moment (in*lbf) : $Fbend = 0.000\,in \cdot lbf$

Preload on the Bolt:

Dry torque coef.: $k := 0.2$

Bolt preload: $Fpmax := .75 \cdot At \cdot Fty$ $\quad Fpmax = 3.246 \times 10^3 lbf$ $\quad Fpmax = 1.444 \times 10^4 newton$

Tightening torque: $Tmax := Fpmax \cdot k \cdot D$

Tightening torque: $Tmax = 162.318 in \cdot lbf$ $\quad Tmax = 18.339 m \cdot newton$

$Tmin := .85 \cdot Tmax$

$Tmin = 137.970 in \cdot lbf$ $\quad Tmin = 15.589 m \cdot newton$

$Fpmin := \frac{Tmin}{k \cdot D}$ $\quad Fpmin = 2759 lbf$ $\quad Fpmin = 1.227 \times 10^4 newton$

Preload ratio: $\frac{Fpmax}{fty} = 0.750$

Loading plane factor: $n := .5$

Joint load factor (steel bolt on Alum. plate): $\phi := 0.266$

Calculate joint seperation load: $Wjs := \frac{Fpmin}{(1 - n \cdot \phi)}$ $\quad Wjs = 3183 lbf$ $\quad Wjs = 1.416 \times 10^4 newton$

Check for joint seperation (if ratio is > 1.0, separation occurs)

$\frac{Ften \cdot FSsep}{Wjs} = 0.476$ $\quad MoSsep := \left(1 - \frac{Ften \cdot FSsep}{Wjs}\right)$ $\quad MoSsep = 0.524$

Tensile, shear and bending ratios

$Fa := if[(Ften < Wjs), Fpmax + \phi \cdot n \cdot (FSu \cdot FF \cdot Ften), FF \cdot FSu \cdot Ften]$

Axial load:

If statement determines if joint separation occurs

$Fa = 3.617 \times 10^3 lbf$ $\quad Fa = 1.609 \times 10^4 newton$

Tensile ratio: $Rt := \frac{Fa}{ftu \cdot \alpha c}$ $\quad Rt = 0.641$

Note: Temperature correction factor is applied to the bolt allowables here.

Bending ratio: $Rb := \frac{FF \cdot FSu \cdot Fbend}{fbu \cdot \alpha c}$ $\quad Rb = 0.000$

Shear ratio: $Rs := \frac{FF \cdot FSu \cdot Fshear}{fsu \cdot \alpha c}$ $\quad Rs = 0.430$

Calculate Margins of safety:

Guess K $\quad K := 1.0$

Given

$(K \cdot Rs)^3 + [K \cdot (Rt + Ky \cdot Rb)]^2 = 1$ $\quad K := Find(K)$

Margin of safety: $MoScombU := K - 1$ $\quad MoScombU = 0.386$

For the bearing, tension and shear out verification the lug formulas from Bruhn "Analysis and design of flight vehicle structures" are used.

Calculate Margins of safety for Bearing:

Fbry(plate) [Pa] : $Fbry := 558.49 \times 10^{6} Pa$

Fbru(plate) [Pa] : $Fbru := 710.2 \times 10^{6} \cdot Pa$

Plate Thickness [mm] : $Thk := 6.3mm$ $\quad Thk = 6.300 \times 10^{-3} m$

Nominal Diameter [mm] : $D = 6.350mm$

Limit Shear Force [N] : $Shear := Fshear$ $\quad D = 6.350 \times 10^{-3} m$

Limit Stress [Pa] : $Sh := \frac{Shear}{(Thk \cdot D)}$ $\quad Sh = 6.303 \times 10^{7} Pa$

MoS bry : $MoSbry := \left(\frac{Fbry \cdot \alpha c}{Sh \cdot FSy}\right) - 1$ $\quad MoSbry = 5.876$

MoS bru : $MoSbru := \left(\frac{Fbru \cdot \alpha c}{Sh \cdot FSu}\right) - 1$ $\quad MoSbru = 4.465$

Calculate Margins of safety for tension failure:

Fty(plate) [Pa] : $Fty := 393 \times 10^{6} \cdot Pa$

Ftu(plate) [Pa] : $Ftu := 468.84 \times 10^{6} \cdot Pa$

Plate Thickness [mm] : $Thk := 6.3mm$ $\quad Thk = 6.300 \times 10^{-3} m$

Distance hole-end plate [mm] : $Dis := 7.7 \cdot mm$ $\quad Dis = 7.700 \times 10^{-3} m$

Limit Shear Force [N] : $Shear := Fshear$

Limit Stress [Pa] : $Sh := \frac{Shear}{(Thk \cdot Dis \cdot 2)}$ $\quad Sh = 2.599 \times 10^{7} Pa$

MoS lug ty : $MoSlugty := \left(\frac{Fty \cdot \alpha c}{Sh \cdot FSy}\right) - 1$ $\quad MoSlugty = 10.734$

MoS lug tu : $MoSlugtu := \left(\frac{Ftu \cdot \alpha c}{Sh \cdot FSu}\right) - 1$ $\quad MoSlugtu = 7.749$

Calculate Margins of safety for shear out failure:

Fsu(plate) [Pa] : $Fsu := 262 \times 10^{6} \cdot Pa$

Fsy(plate) [Pa] : $Fsy := 151 \cdot 10^{6} Pa$

Plate Thickness [mm] : $Thk := 6.3mm$ $\quad Thk = 6.300 \times 10^{-3} m$

Distance hole-end plate [mm] : $Dis := 7.7mm$ $\quad Dis = 7.700 \times 10^{-3} m$

Limit Shear Force [N] : $Shear := Fshear$

Limit Stress [Pa] : $Sh := \frac{Shear}{(Thk \cdot Dis \cdot 2)}$ $\quad Sh = 2.599 \times 10^{7} Pa$

MoS lug sy : $MoSlugsy := \left(\frac{Fsy \cdot \alpha c}{Sh \cdot FSy}\right) - 1$ $\quad MoSlugsy = 3.509$

MoS lug su : $MoSlugsu := \left(\frac{Fsu \cdot \alpha c}{Sh \cdot FSu}\right) - 1$ $\quad MoSlugsu = 3.889$