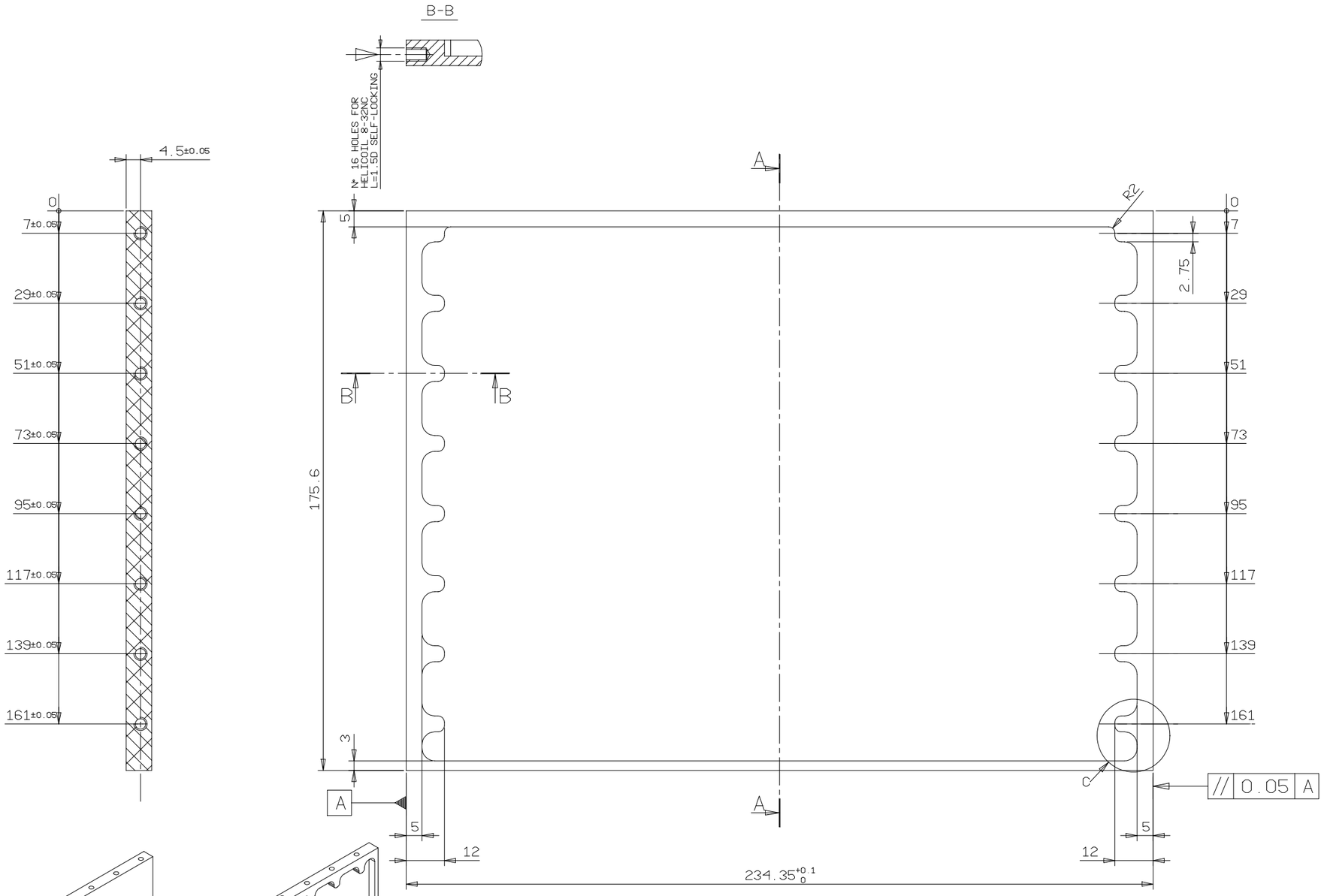

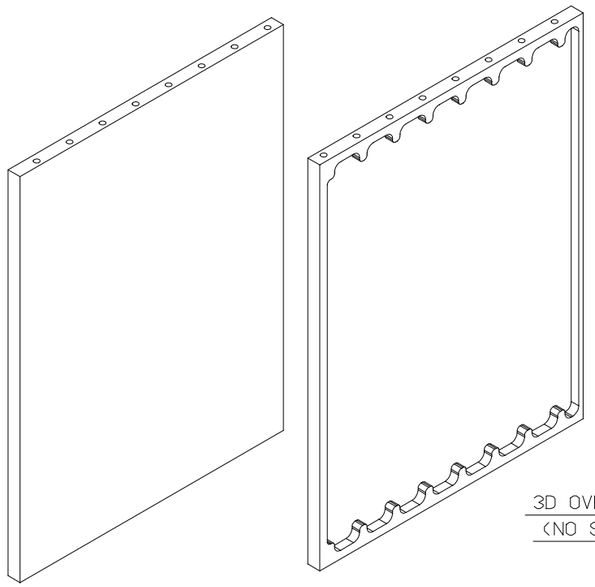

3D OVERVIEWS
(NO SCALE)

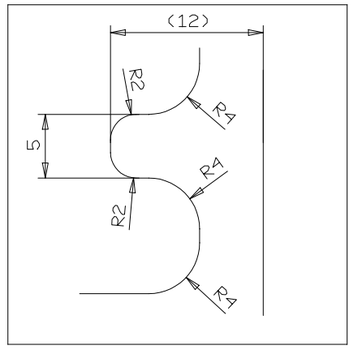

VIEW C
Scale 3:1

NOTES:
- MATERIAL : AL ALLOY 7075 T7351 SPEC. QQ-A-250/12
- GENERAL SURFACE TREATMENT : CLEAR ANODIZING ACC. TO SPEC. MIL-A-8625 TYPE II CLASS 1
- LOCAL SURFACE TREATMENT : ALODINE 1200 SPEC. MIL-C-5541 CLASS 3
- REMOVE BURRS AND BREAK SHARP EDGES 0.5X45° ACC. TO DIN 6784
- HELI-COIL INSERTION DIRECTION
- INSERT HELI-COIL ACC. TO SPEC. GD-PR-CGS-060
- INSERT HELI-COIL AFTER SURFACE TREATMENT

REV	DATE	DRAWN	CHECK	ENG.	PR. ASS.	C. of C.	CHANGE AUTHORITY
A	08/11/2002	HIGHFTECH					
/	22/05/2002	HIGHFTECH					

CUSTOMER ID | EFFECTIVITY | CARLO GAVAZZI SPACE

DRAWING TITLE
AMS 02 - CRATES
CRATE SIDE WALL LEFT

SCALE 1:1 | GEN. TOL. ISO 2768 f | GEN. RA. 3.2

CARLO GAVAZZI

HIGHER ASSEMBLY | DRAWING NUMBER 04-AMS-110.04.00 | SHEET 1 OF 1

FILE DRAWING: CRATE_SIDE_WALL_LEFT-revA

All information contained in this document are property of CARLO GAVAZZI SPACE.
All rights reserved.