Sect 2.1.1 CONICAL FLANGE

FRACTURE ANALYSIS

Prepared By	Name/Date Saike Wang / 3/11/03	LOCKHEED MARTIN Science, Engineering, Analysis, & Test *Mechanical Systems Analysis Department*	File Name conflange_fract.doc
Checked By	3/12/03		Drawing No. SDG39135778
Title: Conical flange Fracture analysis			

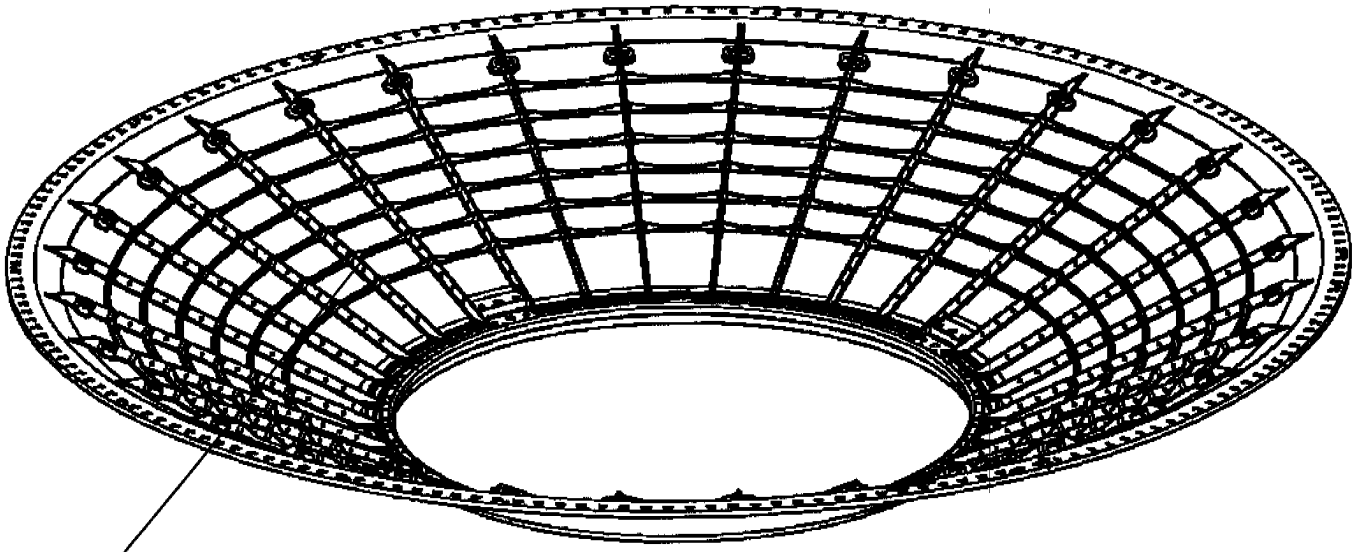

Crack location

CC01

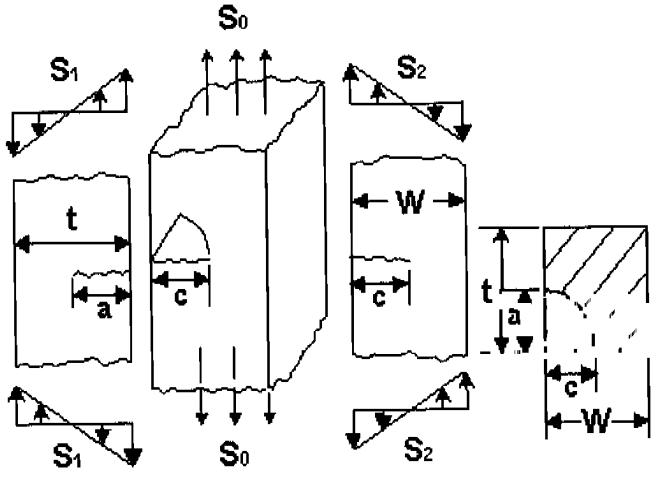

Conical Flange CC01 Model STA VC spectrum

Material:	2219-T62 Al. Aly.
NASA/FLAGRO Crack case type:	CC01
Section Properties:	
Plate width	W = 0.5 in.
Plate thickness	t = 0.15 in.
Crack Properties:	a = 0.025 in. c = 0.025 in.
Loads:	
Max. Ele. Stress	S = 28080 psi (shown in the color plot) (Ref. R1016 on Element ID: 218235 Max-Prin.)
Tensile Stress	S0= 28080 psi (assuming S as the tensile stress)

This max. tensile stress is located at the fourth ring counting from top. The dimensions of the ring are 0.15 inch thick and 0.5 inch wide.

The four spectrums under the Flight vacuum case are used to run the NASGRO v4.0. The four spectrums include Truck transportation, Air transportation, On-Orbit, and Launch/landing conditions.

The material data is used from Material ID M2IA11AB1, 2219-T62 Al of the NASGRO library, except that the UTS and YS are changed for the material property of the 2219-T62 Al. Aly. as per MIL-HDBK-5H, Page 3-166.

The truck, air and on orbit spectrums are run for 1 mission with a scatter factor of 4 and the Launch/landing spectrum is run for 3 missions with a scatter factor of 4. The Conical Flanges are classified as low risk. The low risk crack sizes a= 0.025 in and a/c = 1.0 in are used (Ref. JSC25863A, Section 5.1.L.2.B.3).

FATIGUE CRACK GROWTH ANALYSIS

DATE: 31-Dec-02 TIME: 12:55:59
(NASGRO Version 4.02, September 2002.)
U.S. customary units [inches, ksi, ksi sqrt(in)]

PROBLEM TITLE

STA VC Spectrums With 6 blocks

Crack Growth Model: Non Interaction
Ratio of growth increment to current crk size= 0.0050
Equation/Table : NASGRO Equation

GEOMETRY
MODEL: CC01-Corner crack in plate or bar (2D).

Plate Thickness, t = 0.1500
Plate Width, W = 0.5000

FLAW SIZE: (User specified)

a (init.) = 0.2500E-01
c (init.) = 0.2500E-01
a/c (init.) = 1.000

MATERIAL

MATL 1: 1000-9000 SERIES AL [**Manual data input**]
2000 series

Material Header Info.:

Material 1 Data ID: M2IA11AB1
Alloy Description : 2219-T62 Al

Alloy Cond/HT : Plt & Sht; L-T; LA; Room temp

Product Form :

Environment :

Material Properties:

:Matl: No.:	UTS :	YS :	K1e :	K1c :	Ak :	Bk :	Thk :	Kc :	Keac :
: 1 :	**54.0:**	**36.0:**	43.0:	31.0:	1.00:	1.00:	0.150:	61.8:	:

:Matl: No.:	C :	n :	p :	q :	DK1 :	Cth+ :	Alpha:	Smax/SIGo :
: 1 :	0.200D-07:	2.800:	0.50:	1.00:	0.80:	2.80:	2.00:	0.30:

Small crack threshold parameters:
a0 = 0.00150
Limit of ratio DKth(S)/DKth(L) = 0.20

Cth+ = 0, Cth- = 0 are used at start only
STA VC Spectrums With 6 blocks
MODEL: CC01

FATIGUE SPECTRUM

[Note: Stress = Input Value * Scale Factor]

Stress Scaling Factors for Block Case: 1. **TRUCK1-STA**

```
Scale Factor for Stress S0:   0.28080
Scale Factor for Stress S1:    0.0000
Scale Factor for Stress S2:    0.0000

Stress Scaling Factors for Block Case:  2.   AIR1-STA

Scale Factor for Stress S0:   0.28080
Scale Factor for Stress S1:    0.0000
Scale Factor for Stress S2:    0.0000

Stress Scaling Factors for Block Case:  3.   SINE-STA

Scale Factor for Stress S0:   0.28080
Scale Factor for Stress S1:    0.0000
Scale Factor for Stress S2:    0.0000

Stress Scaling Factors for Block Case:  4.   ACOUSTIC-STA

Scale Factor for Stress S0:   0.28080
Scale Factor for Stress S1:    0.0000
Scale Factor for Stress S2:    0.0000

Stress Scaling Factors for Block Case:  5.   GSFC

Scale Factor for Stress S0:   0.28080
Scale Factor for Stress S1:    0.0000
Scale Factor for Stress S2:    0.0000

Stress Scaling Factors for Block Case:  6.   ONORBIT1-STA

Scale Factor for Stress S0:   0.28080
Scale Factor for Stress S1:    0.0000
Scale Factor for Stress S2:    0.0000

Schedule info. was input manually

Total No. of Blocks in Schedule =    32

   Block Number and Case Correspondences
 Block Number                    Block Case No.
From   -   To
    1   -      4                        1
    5   -      8                        2
    9   -     12                        3
   13   -     16                        4
   17   -     28                        5
   29   -     32                        6

Stresses: Tension, bending or pin

STA VC Spectrums With 6 blocks
MODEL: CC01

FATIGUE SCHEDULE BLOCK INPUT TABLE


BLOCK CASE NO.  1.   TRUCK1-STA

 S  : M:  NUMBER      :        S0          :        S1          :
 T  : A:    OF        :                    :                    :
 E  : T:  FATIGUE     :                    :                    :
 P  : L:  CYCLES      :    (t1) :  (t2)    :    (t1) :  (t2)    :
----:--:-------------:---------:---------:---------:---------:
   1: 1:     1444.00 :    28.40:   -28.40:    28.40:   -28.40:
   2: 1:     1765.00 :    20.50:   -20.50:    20.50:   -20.50:
   3: 1:    11234.00 :    14.80:   -14.80:    14.80:   -14.80:
   4: 1:    31937.00 :    10.60:   -10.60:    10.60:   -10.60:
   5: 1:    90836.00 :     7.60:    -7.60:     7.60:    -7.60:
   6: 1:   123736.00 :     5.60:    -5.60:     5.60:    -5.60:
```

7:	1:	160648.00	4.00:	-4.00:	4.00:	-4.00:
8:	1:	1184080.00	3.30:	-3.30:	3.30:	-3.30:

S T E P	M: A: T: L:	NUMBER OF FATIGUE CYCLES	S2 (t1)	S2 (t2)
1:	1:	1444.00	28.40:	-28.40:
2:	1:	1765.00	20.50:	-20.50:
3:	1:	11234.00	14.80:	-14.80:
4:	1:	31937.00	10.60:	-10.60:
5:	1:	90836.00	7.60:	-7.60:
6:	1:	123736.00	5.60:	-5.60:
7:	1:	160648.00	4.00:	-4.00:
8:	1:	1184080.00	3.30:	-3.30:

Environmental Crack Growth Check for Sustained Stresses
|Kmax less than Keac): NOT SET

BLOCK CASE NO. 2. **AIR1-STA**

S T E P	M: A: T: L:	NUMBER OF FATIGUE CYCLES	S0 (t1)	S0 (t2)	S1 (t1)	S1 (t2)
1:	1:	17832.00	36.00:	-36.00:	36.00:	-36.00:
2:	1:	594.00	36.00:	-36.00:	36.00:	-36.00:
3:	1:	1069920.00	11.00:	-11.00:	11.40:	-11.40:
4:	1:	30.00	36.00:	-36.00:	36.00:	-36.00:
5:	1:	17832.00	36.00:	-36.00:	36.00:	-36.00:

S T E P	M: A: T: L:	NUMBER OF FATIGUE CYCLES	S2 (t1)	S2 (t2)
1:	1:	17832.00	36.00:	-36.00:
2:	1:	594.00	36.00:	-36.00:
3:	1:	1069920.00	11.40:	-11.40:
4:	1:	30.00	36.00:	-36.00:
5:	1:	17832.00	36.00:	-36.00:

Environmental Crack Growth Check for Sustained Stresses
|Kmax less than Keac): NOT SET

BLOCK CASE NO. 3. **SINE-STA**

S T E P	M: A: T: L:	NUMBER OF FATIGUE CYCLES	S0 (t1)	S0 (t2)	S1 (t1)	S1 (t2)
1:	1:	121.00	104.50:	-104.50:	104.50:	-104.50:
2:	1:	121.00	82.20:	-82.20:	82.20:	-82.20:
3:	1:	121.00	107.20:	-107.20:	107.20:	-107.20:

S T E P	M: A: T: L:	NUMBER OF FATIGUE CYCLES	S2 (t1)	S2 (t2)
1:	1:	121.00	104.50:	-104.50:
2:	1:	121.00	82.20:	-82.20:
3:	1:	121.00	107.20:	-107.20:

Environmental Crack Growth Check for Sustained Stresses

(Kmax less than Keac): NOT SET

BLOCK CASE NO. 4. **ACOUSTIC-STA**

S T E P	M: A: T: L:	NUMBER OF FATIGUE CYCLES	S0 (t1)	S0 (t2)	S1 (t1)	S1 (t2)
1:	1:	9000.00	10.00:	-10.00:	10.00:	-10.00:

S T E P	M: A: T: L:	NUMBER OF FATIGUE CYCLES	S2 (t1)	S2 (t2)
1:	1:	9000.00	10.00:	-10.00:

Environmental Crack Growth Check for Sustained Stresses
(Kmax less than Keac): NOT SET

BLOCK CASE NO. 5. **GSFC**

S T E P	M: A: T: L:	NUMBER OF FATIGUE CYCLES	S0 (t1)	S0 (t2)	S1 (t1)	S1 (t2)
1:	1:	2.00	-100.00:	100.00:	-100.00:	100.00:
2:	1:	4.00	-90.00:	90.00:	-90.00:	90.00:
3:	1:	8.00	-80.00:	80.00:	-80.00:	80.00:
4:	1:	15.00	-70.00:	70.00:	-70.00:	70.00:
5:	1:	49.00	-60.00:	60.00:	-60.00:	60.00:
6:	1:	81.00	-50.00:	50.00:	-50.00:	50.00:
7:	1:	178.00	-40.00:	40.00:	-40.00:	40.00:
8:	1:	641.00	-30.00:	30.00:	-30.00:	30.00:
9:	1:	3120.00	-20.00:	20.00:	-20.00:	20.00:
10:	1:	3405.00	-10.00:	10.00:	-10.00:	10.00:
11:	1:	5019.00	-7.00:	7.00:	-7.00:	7.00:
12:	1:	28853.00	-5.00:	5.00:	-5.00:	5.00:
13:	1:	91655.00	-3.00:	3.00:	-3.00:	3.00:

S T E P	M: A: T: L:	NUMBER OF FATIGUE CYCLES	S2 (t1)	S2 (t2)
1:	1:	2.00	-100.00:	100.00:
2:	1:	4.00	-90.00:	90.00:
3:	1:	8.00	-80.00:	80.00:
4:	1:	15.00	-70.00:	70.00:
5:	1:	49.00	-60.00:	60.00:
6:	1:	81.00	-50.00:	50.00:
7:	1:	178.00	-40.00:	40.00:
8:	1:	641.00	-30.00:	30.00:
9:	1:	3120.00	-20.00:	20.00:
10:	1:	3405.00	-10.00:	10.00:
11:	1:	5019.00	-7.00:	7.00:
12:	1:	28853.00	-5.00:	5.00:
13:	1:	91655.00	-3.00:	3.00:

Environmental Crack Growth Check for Sustained Stresses
(Kmax less than Keac): NOT SET

BLOCK CASE NO. 6. **ONORBIT1-STA**

S	M:	NUMBER	S0	S1

STEP	STA	FATIGUE CYCLES	(t1)	(t2)	(t1)	(t2)
1	1	34.00	1.02	-1.02	1.02	-1.02
2	1	34.00	0.81	-0.81	0.81	-0.81
3	1	60.00	0.61	-0.61	0.61	-0.61
4	1	179.00	0.41	-0.41	0.41	-0.41
5	1	117.00	1.02	-1.02	1.02	-1.02
6	1	414.00	0.81	-0.81	0.81	-0.81
7	1	2404.00	0.61	-0.61	0.61	-0.61
8	1	9789.00	0.41	-0.41	0.41	-0.41
9	1	62675.00	0.20	-0.20	0.20	-0.20

STEP	STA	NUMBER OF FATIGUE CYCLES	S2 (t1)	S2 (t2)
1	1	34.00	1.02	-1.02
2	1	34.00	0.81	-0.81
3	1	60.00	0.61	-0.61
4	1	179.00	0.41	-0.41
5	1	117.00	1.02	-1.02
6	1	414.00	0.81	-0.81
7	1	2404.00	0.61	-0.61
8	1	9789.00	0.41	-0.41
9	1	62675.00	0.20	-0.20

Environmental Crack Growth Check for Sustained Stresses
(Kmax less than Keac): NOT SET

STA VC Spectrums With 6 blocks
MODEL: CC01

FATIGUE SCHEDULE BLOCK STRESS TABLE

STEP	STA	NUMBER OF FATIGUE CYCLES	S0 (ksi) (t1)	S0 (ksi) (t2)	S1 (ksi) (t1)	S1 (ksi) (t2)
1	1	1444.00	7.97	-7.97	0.00	0.00
2	1	1765.00	5.76	-5.76	0.00	0.00
3	1	11234.00	4.16	-4.16	0.00	0.00
4	1	31937.00	2.98	-2.98	0.00	0.00
5	1	90836.00	2.13	-2.13	0.00	0.00
6	1	123736.00	1.57	-1.57	0.00	0.00
7	1	160648.00	1.12	-1.12	0.00	0.00
8	1	1184080.00	0.93	-0.93	0.00	0.00

STEP	STA	NUMBER OF FATIGUE CYCLES	S2 (ksi) (t1)	S2 (ksi) (t2)
1	1	1444.00	0.00	0.00
2	1	1765.00	0.00	0.00
3	1	11234.00	0.00	0.00
4	1	31937.00	0.00	0.00
5	1	90836.00	0.00	0.00
6	1	123736.00	0.00	0.00
7	1	160648.00	0.00	0.00
8	1	1184080.00	0.00	0.00

Environmental Crack Growth Check for Sustained Stresses
(Kmax less than Keac): NOT SET

STA VC Spectrums With 6 blocks

MODEL: CC01

FATIGUE SCHEDULE BLOCK STRESS TABLE

S T E P	M: A: T: L:	NUMBER OF FATIGUE CYCLES	S0 (ksi) (t1)	S0 (ksi) (t2)	S1 (ksi) (t1)	S1 (ksi) (t2)
1:	1:	17832.00	10.11:	-10.11:	0.00:	0.00:
2:	1:	594.00	10.11:	-10.11:	0.00:	0.00:
3:	1:	1069920.00	3.09:	-3.09:	0.00:	0.00:
4:	1:	30.00	10.11:	-10.11:	0.00:	0.00:
5:	1:	17832.00	10.11:	-10.11:	0.00:	0.00:

S T E P	M: A: T: L:	NUMBER OF FATIGUE CYCLES	S2 (ksi) (t1)	S2 (ksi) (t2)
1:	1:	17832.00	0.00:	0.00:
2:	1:	594.00	0.00:	0.00:
3:	1:	1069920.00	0.00:	0.00:
4:	1:	30.00	0.00:	0.00:
5:	1:	17832.00	0.00:	0.00:

Environmental Crack Growth Check for Sustained Stresses
(Kmax less than Keac): NOT SET

STA VC Spectrums With 6 blocks
MODEL: CC01

FATIGUE SCHEDULE BLOCK STRESS TABLE

S T E P	M: A: T: L:	NUMBER OF FATIGUE CYCLES	S0 (ksi) (t1)	S0 (ksi) (t2)	S1 (ksi) (t1)	S1 (ksi) (t2)
1:	1:	121.00	29.34:	-29.34:	0.00:	0.00:
2:	1:	121.00	23.08:	-23.08:	0.00:	0.00:
3:	1:	121.00	30.10:	-30.10:	0.00:	0.00:

S T E P	M: A: T: L:	NUMBER OF FATIGUE CYCLES	S2 (ksi) (t1)	S2 (ksi) (t2)
1:	1:	121.00	0.00:	0.00:
2:	1:	121.00	0.00:	0.00:
3:	1:	121.00	0.00:	0.00:

Environmental Crack Growth Check for Sustained Stresses
(Kmax less than Keac): NOT SET

STA VC Spectrums With 6 blocks
MODEL: CC01

FATIGUE SCHEDULE BLOCK STRESS TABLE

S T E P	M: A: T: L:	NUMBER OF FATIGUE CYCLES	S0 (ksi) (t1)	S0 (ksi) (t2)	S1 (ksi) (t1)	S1 (ksi) (t2)

1:	1:	9000.00	2.81:	-2.81:	0.00:	0.00:

S T E P	M: A: T: L:	NUMBER OF FATIGUE CYCLES	S2 (ksi) (t1)	S2 (ksi) (t2)
1:	1:	9000.00	0.00:	0.00:

Environmental Crack Growth Check for Sustained Stresses
(Kmax less than Keac): NOT SET

STA VC Spectrums With 6 blocks
MODEL: CC01

FATIGUE SCHEDULE BLOCK STRESS TABLE

S T E P	M: A: T: L:	NUMBER OF FATIGUE CYCLES	S0 (ksi) (t1)	S0 (ksi) (t2)	S1 (ksi) (t1)	S1 (ksi) (t2)
1:	1:	2.00	-28.08:	28.08:	0.00:	0.00:
2:	1:	4.00	-25.27:	25.27:	0.00:	0.00:
3:	1:	8.00	-22.46:	22.46:	0.00:	0.00:
4:	1:	15.00	-19.66:	19.66:	0.00:	0.00:
5:	1:	49.00	-16.85:	16.85:	0.00:	0.00:
6:	1:	81.00	-14.04:	14.04:	0.00:	0.00:
7:	1:	178.00	-11.23:	11.23:	0.00:	0.00:
8:	1:	641.00	-8.42:	8.42:	0.00:	0.00:
9:	1:	3120.00	-5.62:	5.62:	0.00:	0.00:
10:	1:	3405.00	-2.81:	2.81:	0.00:	0.00:
11:	1:	5019.00	-1.97:	1.97:	0.00:	0.00:
12:	1:	28853.00	-1.40:	1.40:	0.00:	0.00:
13:	1:	91655.00	-0.84:	0.84:	0.00:	0.00:

S T E P	M: A: T: L:	NUMBER OF FATIGUE CYCLES	S2 (ksi) (t1)	S2 (ksi) (t2)
1:	1:	2.00	0.00:	0.00:
2:	1:	4.00	0.00:	0.00:
3:	1:	8.00	0.00:	0.00:
4:	1:	15.00	0.00:	0.00:
5:	1:	49.00	0.00:	0.00:
6:	1:	81.00	0.00:	0.00:
7:	1:	178.00	0.00:	0.00:
8:	1:	641.00	0.00:	0.00:
9:	1:	3120.00	0.00:	0.00:
10:	1:	3405.00	0.00:	0.00:
11:	1:	5019.00	0.00:	0.00:
12:	1:	28853.00	0.00:	0.00:
13:	1:	91655.00	0.00:	0.00:

Environmental Crack Growth Check for Sustained Stresses
(Kmax less than Keac): NOT SET

STA VC Spectrums With 6 blocks
MODEL: CC01

FATIGUE SCHEDULE BLOCK STRESS TABLE

S T E P	M: A: T: L: NUMBER OF FATIGUE CYCLES	S0 (ksi) (t1)	S0 (ksi) (t2)	S1 (ksi) (t1)	S1 (ksi) (t2)
1:	1: 34.00	0.29:	-0.29:	0.00:	0.00:
2:	1: 34.00	0.23:	-0.23:	0.00:	0.00:
3:	1: 60.00	0.17:	-0.17:	0.00:	0.00:
4:	1: 179.00	0.12:	-0.12:	0.00:	0.00:
5:	1: 117.00	0.29:	-0.29:	0.00:	0.00:
6:	1: 414.00	0.23:	-0.23:	0.00:	0.00:
7:	1: 2404.00	0.17:	-0.17:	0.00:	0.00:
8:	1: 9789.00	0.12:	-0.12:	0.00:	0.00:
9:	1: 62675.00	0.06:	-0.06:	0.00:	0.00:

S T E P	M: A: T: L: NUMBER OF FATIGUE CYCLES	S2 (ksi) (t1)	S2 (ksi) (t2)
1:	1: 34.00	0.00:	0.00:
2:	1: 34.00	0.00:	0.00:
3:	1: 60.00	0.00:	0.00:
4:	1: 179.00	0.00:	0.00:
5:	1: 117.00	0.00:	0.00:
6:	1: 414.00	0.00:	0.00:
7:	1: 2404.00	0.00:	0.00:
8:	1: 9789.00	0.00:	0.00:
9:	1: 62675.00	0.00:	0.00:

Environmental Crack Growth Check for Sustained Stresses
(Kmax less than Keac): NOT SET

STA VC Spectrums With 6 blocks
MODEL: CC01

ANALYSIS RESULTS:

Schedule	Block	Step	Cycles	Crack a	Crack c	Max Kmax(a)	Max Kmax(c)
0	0	0	0.00	0.25000E-01	0.25000E-01	-	-
1	1	-	1605680.00	0.25023E-01	0.25025E-01	1.61	1.63
1	2	-	3211360.00	0.25047E-01	0.25050E-01	1.61	1.63
1	3	-	4817040.00	0.25070E-01	0.25075E-01	1.61	1.63
1	4	-	6422720.00	0.25094E-01	0.25100E-01	1.61	1.63
1	5	-	7528928.00	0.26427E-01	0.26476E-01	2.10	2.12
1	6	-	8635136.00	0.27894E-01	0.27989E-01	2.16	2.18
1	7	-	9741344.00	0.29516E-01	0.29660E-01	2.23	2.25
1	8	-	10847552.00	0.31317E-01	0.31510E-01	2.31	2.32
1	9	-	10847915.00	0.31779E-01	0.31983E-01	6.91	6.97
1	10	-	10848278.00	0.32253E-01	0.32468E-01	6.97	7.02
1	11	-	10848641.00	0.32739E-01	0.32964E-01	7.03	7.08
1	12	-	10849004.00	0.33237E-01	0.33474E-01	7.09	7.13
1	13	-	10858004.00	0.33237E-01	0.33474E-01	0.661	0.665
1	14	-	10867004.00	0.33237E-01	0.33474E-01	0.661	0.665
1	15	-	10876004.00	0.33237E-01	0.33474E-01	0.661	0.665
1	16	-	10885004.00	0.33237E-01	0.33474E-01	0.661	0.665
1	17	-	11018034.00	0.33337E-01	0.33576E-01	6.51	6.65
1	18	-	11151064.00	0.33438E-01	0.33680E-01	6.62	6.66
1	19	-	11284094.00	0.33539E-01	0.33784E-01	6.63	6.67
1	20	-	11417124.00	0.33641E-01	0.33888E-01	6.64	6.69
1	21	-	11550154.00	0.33744E-01	0.33994E-01	6.65	6.70
1	22	-	11683184.00	0.33847E-01	0.34099E-01	6.66	6.71

1	23	-	11816214.00	0.33951E-01	0.34206E-01	6.67	6.72
1	24	-	11949244.00	0.34056E-01	0.34313E-01	6.68	6.73
1	25	-	12082274.00	0.34161E-01	0.34421E-01	6.70	6.74
1	26	-	12215304.00	0.34267E-01	0.34529E-01	6.71	6.75
1	27	-	12348334.00	0.34373E-01	0.34638E-01	6.72	6.76
1	28	-	12481364.00	0.34480E-01	0.34748E-01	6.73	6.77
1	29	-	12557070.00	0.34480E-01	0.34748E-01	0.688E-01	0.692E-01
1	30	-	12632776.00	0.34480E-01	0.34748E-01	0.688E-01	0.692E-01
1	31	-	12708482.00	0.34480E-01	0.34748E-01	0.688E-01	0.692E-01
1	32	-	12784188.00	0.34480E-01	0.34748E-01	0.688E-01	0.692E-01
1	32	9	12784188.00	0.34480E-01	0.34748E-01	0.135E-01	0.136E-01

FINAL RESULTS:
Critical Crack Size has NOT been reached.

at Cycle No. 62675.00
of Load Step No. 9 Description: None
of Block No. 32
of Schedule No. 1

Crack Sizes: a = 0.344804E-01 , c = 0.347483E-01 , a/c = 0.9923
Total Cycles = 12784188.

Prepared By	Name/Date Saike Wang / 3/11/03	LOCKHEED MARTIN Science, Engineering, Analysis, & Test *Mechanical Systems Analysis Department*	File Name conflange_fract.doc
Checked By	3/12/03		Drawing No. SDG39135778
Title: Conical flange Fracture analysis			

This analysis is for the Conical Flange CC01 Model Flight VC spectrum

Material:	2219-T62 Al. Aly.
NASA/FLAGRO Crack case type:	CC01
Section Properties:	
Plate width	W = 0.5 in.
Plate thickness	t = 0.15 in.
Crack Properties:	a = 0.025 in. c = 0.025 in.
Loads:	
Max. Ele. Stress	S = 28080 psi (shown in the color plot) (Ref. R1016 on Element ID: 218235 Max-Prin.)
Tensile Stress	S0= 28080 psi (assuming S as the tensile stress)

This max. tensile stress is located at the fourth rings counting from top. The dimensions of the ring are 0.15 inch thick and 0.5 inch wide.

The four spectrums under the Flight vacuum case are used to run the NASGRO v4.0. The four spectrums include Truck transportation, Air transportation, On-Orbit, and Launch/landing conditions.

The material data is used from Material ID M2IA11AB1, 2219-T62 Al of the NASGRO library, except that the UTS and YS are changed for the material property of the 2219-T62 Al. Aly. as per MIL-HDBK-5H, Page 3-166.

The truck, air and on orbit spectrums are run for 1 mission with a scatter factor of 4 and the Launch/landing spectrum is run for 3 missions with a scatter factor of 4. The Conical Flanges are classified as low risk. The low risk crack sizes a= 0.025 in and a/c = 1.0 in are used (Ref. JSC25863A, Section 5.1.L.2.B.3).

Prepared By	Name/Date Saike Wang / 3/11/03	**LOCKHEED MARTIN** Science, Engineering, Analysis, & Test *Mechanical Systems Analysis Department*	File Name conflange_fract.doc
Checked By	3/12/03		Drawing No. SDG39135778
Title: Conical flange Fracture analysis			

FATIGUE CRACK GROWTH ANALYSIS

DATE: 31-Dec-02 TIME: 11:24:15
(NASGRO Version 4.02, September 2002.)
U.S. customary units [inches, ksi, ksi sqrt(in)]

PROBLEM TITLE

Flight VC Spectrums With Four Blocks

Crack Growth Model: Non Interaction
Ratio of growth increment to current crk size= 0.0050
Equation/Table : NASGRO Equation

GEOMETRY
MODEL: CC01-Corner crack in plate or bar (2D).

Plate Thickness, t = 0.1500
Plate Width, W = 0.5000
FLAW SIZE: (User specified)
a (init.) = 0.2500E-01
c (init.) = 0.2500E-01
a/c (init.) = 1.000

MATERIAL
MATL 1: 1000-9000 SERIES AL [**Manual data input**]
2000 series
Material Header Info.:

Material 1 Data ID: M2IA11AB1
Alloy Description : 2219-T62 Al

Alloy Cond/HT : Plt & Sht; L-T; LA; Room temp

Product Form :

Material Properties:

Matl No.	UTS	YS	K1e	K1c	Ak	Bk	Thk	Kc	Keac
1	**54.0**	**36.0**	43.0	31.0	1.00	1.00	0.150	61.8	

Matl No.	Crack Growth Eqn Constants							
	C	n	p	q	DK1	Cth+	Alpha	Smax/SIGo
1	0.200D-07	2.800	0.50	1.00	0.80	2.80	2.00	0.30

Small crack threshold parameters:
a0 = 0.00150
Limit of ratio DKth(S)/DKth(L) = 0.20

Cth+ = 0, Cth- = 0 are used at start only
Flight VC Spectrums With Four Blocks
MODEL: CC01

FATIGUE SPECTRUM

[Note: Stress = Input Value * Scale Factor]

Stress Scaling Factors for Block Case: 1. **TRUCK2-VC**

Scale Factor for Stress S0: 0.28080
Scale Factor for Stress S1: 0.0000
Scale Factor for Stress S2: 0.0000

Stress Scaling Factors for Block Case: 2. **AIR2-VC**

Scale Factor for Stress S0: 0.28080
Scale Factor for Stress S1: 0.0000
Scale Factor for Stress S2: 0.0000

Stress Scaling Factors for Block Case: 3. **GSFC**

Scale Factor for Stress S0: 0.28080
Scale Factor for Stress S1: 0.0000
Scale Factor for Stress S2: 0.0000

Stress Scaling Factors for Block Case: 4. **ONORBIT2-VCMAGNET**

Scale Factor for Stress S0: 0.28080
Scale Factor for Stress S1: 0.0000
Scale Factor for Stress S2: 0.0000

Schedule info. was input manually

Total No. of Blocks in Schedule = 24

Block Number and Case Correspondences

Block Number From	-	To	Block Case No.
1	-	4	1
5	-	8	2
9	-	20	3
21	-	24	4

Stresses: Tension, bending or pin

Flight VC Spectrums With Four Blocks
MODEL: CC01

FATIGUE SCHEDULE BLOCK INPUT TABLE

BLOCK CASE NO. 1. **TRUCK2-VC**

S T E P	M: A: T: L:	NUMBER OF FATIGUE CYCLES	S0 (t1)	S0 (t2)	S1 (t1)	S1 (t2)
1	1	3081.00	28.40	-28.40	28.40	-28.40
2	1	3766.00	20.50	-20.50	20.50	-20.50
3	1	23966.00	14.80	-14.80	14.80	-14.80
4	1	68133.00	10.60	-10.60	10.60	-10.60
5	1	193784.00	7.60	-7.60	7.60	-7.60
6	1	263971.00	5.60	-5.60	5.60	-5.60
7	1	342717.00	4.00	-4.00	4.00	-4.00
8	1	2526038.00	3.30	-3.30	3.30	-3.30

S T E P	M: A: T: L:	NUMBER OF FATIGUE CYCLES	S2 (t1)	S2 (t2)
1	1	3081.00	28.40	-28.40
2	1	3766.00	20.50	-20.50
3	1	23966.00	14.80	-14.80
4	1	68133.00	10.60	-10.60
5	1	193784.00	7.60	-7.60
6	1	263971.00	5.60	-5.60
7	1	342717.00	4.00	-4.00
8	1	2526038.00	3.30	-3.30

Environmental Crack Growth Check for Sustained Stresses
(Kmax less than Keac): NOT SET

BLOCK CASE NO. 2. **AIR2-VC**

S T E P	M: A: T: L:	NUMBER OF FATIGUE CYCLES	S0 (t1)	S0 (t2)	S1 (t1)	S1 (t2)
1:	1:	26748.00	36.00:	-36.00:	36.00:	-36.00:
2:	1:	892.00	36.00:	-36.00:	36.00:	-36.00:
3:	1:	1230408.00	11.00:	-11.00:	11.40:	-11.40:
4:	1:	45.00	36.00:	-36.00:	36.00:	-36.00:
5:	1:	26748.00	36.00:	-36.00:	36.00:	-36.00:

S T E P	M: A: T: L:	NUMBER OF FATIGUE CYCLES	S2 (t1)	S2 (t2)
1:	1:	26748.00	36.00:	-36.00:
2:	1:	892.00	36.00:	-36.00:
3:	1:	1230408.00	11.40:	-11.40:
4:	1:	45.00	36.00:	-36.00:
5:	1:	26748.00	36.00:	-36.00:

Environmental Crack Growth Check for Sustained Stresses
(Kmax less than Keac): NOT SET

BLOCK CASE NO. 3. **GSFC**

S T E P	M: A: T: L:	NUMBER OF FATIGUE CYCLES	S0 (t1)	S0 (t2)	S1 (t1)	S1 (t2)
1:	1:	2.00	-100.00:	100.00:	-100.00:	100.00:
2:	1:	4.00	-90.00:	90.00:	-90.00:	90.00:
3:	1:	8.00	-80.00:	80.00:	-80.00:	80.00:
4:	1:	15.00	-70.00:	70.00:	-70.00:	70.00:
5:	1:	49.00	-60.00:	60.00:	-60.00:	60.00:
6:	1:	81.00	-50.00:	50.00:	-50.00:	50.00:
7:	1:	178.00	-40.00:	40.00:	-40.00:	40.00:
8:	1:	641.00	-30.00:	30.00:	-30.00:	30.00:
9:	1:	3120.00	-20.00:	20.00:	-20.00:	20.00:
10:	1:	3405.00	-10.00:	10.00:	-10.00:	10.00:
11:	1:	5019.00	-7.00:	7.00:	-7.00:	7.00:
12:	1:	28853.00	-5.00:	5.00:	-5.00:	5.00:
13:	1:	91655.00	-3.00:	3.00:	-3.00:	3.00:

S T E P	M: A: T: L:	NUMBER OF FATIGUE CYCLES	S2 (t1)	S2 (t2)
1:	1:	2.00	-100.00:	100.00:
2:	1:	4.00	-90.00:	90.00:
3:	1:	8.00	-80.00:	80.00:
4:	1:	15.00	-70.00:	70.00:
5:	1:	49.00	-60.00:	60.00:
6:	1:	81.00	-50.00:	50.00:
7:	1:	178.00	-40.00:	40.00:
8:	1:	641.00	-30.00:	30.00:
9:	1:	3120.00	-20.00:	20.00:
10:	1:	3405.00	-10.00:	10.00:

11:	1:	5019.00 :	-7.00:	7.00:
12:	1:	28853.00 :	-5.00:	5.00:
13:	1:	91655.00 :	-3.00:	3.00:

Environmental Crack Growth Check for Sustained Stresses
(Kmax less than Keac): NOT SET

BLOCK CASE NO. 4. **ONORBIT2-VCMAGNET**

S T E P	M: A: T: L:	NUMBER OF FATIGUE CYCLES	S0 (t1)	S0 (t2)	S1 (t1)	S1 (t2)
1:	1:	34.00 :	14.10:	8.50:	14.10:	8.50:
2:	1:	34.00 :	13.90:	8.50:	13.90:	8.50:
3:	1:	60.00 :	13.70:	8.50:	13.70:	8.50:
4:	1:	179.00 :	13.50:	8.50:	13.50:	8.50:
5:	1:	117.00 :	14.10:	8.50:	14.10:	8.50:
6:	1:	414.00 :	13.90:	8.50:	13.90:	8.50:
7:	1:	2404.00 :	13.70:	8.50:	13.70:	8.50:
8:	1:	9789.00 :	13.50:	8.50:	13.50:	8.50:
9:	1:	62675.00 :	13.40:	8.50:	13.40:	8.50:

S T E P	M: A: T: L:	NUMBER OF FATIGUE CYCLES	S2 (t1)	S2 (t2)
1:	1:	34.00 :	14.10:	8.50:
2:	1:	34.00 :	13.90:	8.50:
3:	1:	60.00 :	13.70:	8.50:
4:	1:	179.00 :	13.50:	8.50:
5:	1:	117.00 :	14.10:	8.50:
6:	1:	414.00 :	13.90:	8.50:
7:	1:	2404.00 :	13.70:	8.50:
8:	1:	9789.00 :	13.50:	8.50:
9:	1:	62675.00 :	13.40:	8.50:

Environmental Crack Growth Check for Sustained Stresses
(Kmax less than Keac): NOT SET

Flight VC Spectrums With Four Blocks
MODEL: CC01

FATIGUE SCHEDULE BLOCK STRESS TABLE

S T E P	M: A: T: L:	NUMBER OF FATIGUE CYCLES	S0 (ksi) (t1)	S0 (ksi) (t2)	S1 (ksi) (t1)	S1 (ksi) (t2)
1:	1:	3081.00 :	7.97:	-7.97:	0.00:	0.00:
2:	1:	3766.00 :	5.76:	-5.76:	0.00:	0.00:
3:	1:	23966.00 :	4.16:	-4.16:	0.00:	0.00:
4:	1:	68133.00 :	2.98:	-2.98:	0.00:	0.00:
5:	1:	193784.00 :	2.13:	-2.13:	0.00:	0.00:
6:	1:	263971.00 :	1.57:	-1.57:	0.00:	0.00:
7:	1:	342717.00 :	1.12:	-1.12:	0.00:	0.00:
8:	1:	2526038.00 :	0.93:	-0.93:	0.00:	0.00:

S T E P	M: A: T: L:	NUMBER OF FATIGUE CYCLES	S2 (ksi) (t1)	S2 (ksi) (t2)

1:	1:	3081.00 :	0.00:	0.00:
2:	1:	3766.00 :	0.00:	0.00:
3:	1:	23966.00 :	0.00:	0.00:
4:	1:	68133.00 :	0.00:	0.00:
5:	1:	193784.00 :	0.00:	0.00:
6:	1:	263971.00 :	0.00:	0.00:
7:	1:	342717.00 :	0.00:	0.00:
8:	1:	2526038.00 :	0.00:	0.00:

Environmental Crack Growth Check for Sustained Stresses
(Kmax less than Keac): NOT SET

Flight VC Spectrums With Four Blocks
MODEL: CC01

FATIGUE SCHEDULE BLOCK STRESS TABLE

S T E P	M: A: T: L:	NUMBER OF FATIGUE CYCLES	S0 (ksi) (t1)	S0 (ksi) (t2)	S1 (ksi) (t1)	S1 (ksi) (t2)
1:	1:	26748.00 :	10.11:	-10.11:	0.00:	0.00:
2:	1:	892.00 :	10.11:	-10.11:	0.00:	0.00:
3:	1:	1230408.00 :	3.09:	-3.09:	0.00:	0.00:
4:	1:	45.00 :	10.11:	-10.11:	0.00:	0.00:
5:	1:	26748.00 :	10.11:	-10.11:	0.00:	0.00:

S T E P	M: A: T: L:	NUMBER OF FATIGUE CYCLES	S2 (ksi) (t1)	S2 (ksi) (t2)
1:	1:	26748.00 :	0.00:	0.00:
2:	1:	892.00 :	0.00:	0.00:
3:	1:	1230408.00 :	0.00:	0.00:
4:	1:	45.00 :	0.00:	0.00:
5:	1:	26748.00 :	0.00:	0.00:

Environmental Crack Growth Check for Sustained Stresses
(Kmax less than Keac): NOT SET

Flight VC Spectrums With Four Blocks
MODEL: CC01

FATIGUE SCHEDULE BLOCK STRESS TABLE

S T E P	M: A: T: L:	NUMBER OF FATIGUE CYCLES	S0 (ksi) (t1)	S0 (ksi) (t2)	S1 (ksi) (t1)	S1 (ksi) (t2)
1:	1:	2.00 :	-28.08:	28.08:	0.00:	0.00:
2:	1:	4.00 :	-25.27:	25.27:	0.00:	0.00:
3:	1:	8.00 :	-22.46:	22.46:	0.00:	0.00:
4:	1:	15.00 :	-19.66:	19.66:	0.00:	0.00:
5:	1:	49.00 :	-16.85:	16.85:	0.00:	0.00:
6:	1:	81.00 :	-14.04:	14.04:	0.00:	0.00:
7:	1:	178.00 :	-11.23:	11.23:	0.00:	0.00:
8:	1:	641.00 :	-8.42:	8.42:	0.00:	0.00:
9:	1:	3120.00 :	-5.62:	5.62:	0.00:	0.00:
10:	1:	3405.00 :	-2.81:	2.81:	0.00:	0.00:
11:	1:	5019.00 :	-1.97:	1.97:	0.00:	0.00:
12:	1:	28853.00 :	-1.40:	1.40:	0.00:	0.00:
13:	1:	91655.00 :	-0.84:	0.84:	0.00:	0.00:

S T	M: A:	NUMBER OF	S2

E P	T: L:	FATIGUE CYCLES	(ksi) (t1)	(t2)
1:	1:	2.00	0.00:	0.00:
2:	1:	4.00	0.00:	0.00:
3:	1:	8.00	0.00:	0.00:
4:	1:	15.00	0.00:	0.00:
5:	1:	49.00	0.00:	0.00:
6:	1:	81.00	0.00:	0.00:
7:	1:	178.00	0.00:	0.00:
8:	1:	641.00	0.00:	0.00:
9:	1:	3120.00	0.00:	0.00:
10:	1:	3405.00	0.00:	0.00:
11:	1:	5019.00	0.00:	0.00:
12:	1:	28853.00	0.00:	0.00:
13:	1:	91655.00	0.00:	0.00:

Environmental Crack Growth Check for Sustained Stresses
(Kmax less than Keac): NOT SET

Flight VC Spectrums With Four Blocks
MODEL: CC01

FATIGUE SCHEDULE BLOCK STRESS TABLE

S T E P	M: A: T: L:	NUMBER OF FATIGUE CYCLES	S0 (ksi) (t1)	(t2)	S1 (ksi) (t1)	(t2)
1:	1:	34.00	3.96:	2.39:	0.00:	0.00:
2:	1:	34.00	3.90:	2.39:	0.00:	0.00:
3:	1:	60.00	3.85:	2.39:	0.00:	0.00:
4:	1:	179.00	3.79:	2.39:	0.00:	0.00:
5:	1:	117.00	3.96:	2.39:	0.00:	0.00:
6:	1:	414.00	3.90:	2.39:	0.00:	0.00:
7:	1:	2404.00	3.85:	2.39:	0.00:	0.00:
8:	1:	9789.00	3.79:	2.39:	0.00:	0.00:
9:	1:	62675.00	3.76:	2.39:	0.00:	0.00:

S T E P	M: A: T: L:	NUMBER OF FATIGUE CYCLES	S2 (ksi) (t1)	(t2)
1:	1:	34.00	0.00:	0.00:
2:	1:	34.00	0.00:	0.00:
3:	1:	60.00	0.00:	0.00:
4:	1:	179.00	0.00:	0.00:
5:	1:	117.00	0.00:	0.00:
6:	1:	414.00	0.00:	0.00:
7:	1:	2404.00	0.00:	0.00:
8:	1:	9789.00	0.00:	0.00:
9:	1:	62675.00	0.00:	0.00:

Environmental Crack Growth Check for Sustained Stresses
(Kmax less than Keac): NOT SET

Flight VC Spectrums With Four Blocks
MODEL: CC01

ANALYSIS RESULTS:

Schedule	Block	Step	Cycles	Crack a	Crack c	Max Kmax(a)	Max Kmax(c)
0	0	0	0.00	0.25000E-01	0.25000E-01	-	-
1	1	-	3425456.00	0.25050E-01	0.25053E-01	1.61	1.63
1	2	-	6850912.00	0.25100E-01	0.25106E-01	1.61	1.63
1	3	-	10276368.00	0.25151E-01	0.25160E-01	1.62	1.63

1	4	-	13701824.00	0.25202E-01	0.25214E-01	1.62	1.63
1	5	-	14986665.00	0.27268E-01	0.27346E-01	2.14	2.16
1	6	-	16271506.00	0.29661E-01	0.29812E-01	2.23	2.25
1	7	-	17556347.00	0.32465E-01	0.32689E-01	2.35	2.37
1	8	-	18841188.00	0.35788E-01	0.36085E-01	2.47	2.49
1	9	-	18974218.00	0.35904E-01	0.36204E-01	6.88	6.92
1	10	-	19107248.00	0.36021E-01	0.36323E-01	6.89	6.94
1	11	-	19240278.00	0.36139E-01	0.36444E-01	6.91	6.95
1	12	-	19373308.00	0.36257E-01	0.36565E-01	6.92	6.96
1	13	-	19506338.00	0.36377E-01	0.36687E-01	6.93	6.97
1	14	-	19639368.00	0.36497E-01	0.36809E-01	6.94	6.99
1	15	-	19772398.00	0.36618E-01	0.36933E-01	6.96	7.00
1	16	-	19905428.00	0.36739E-01	0.37057E-01	6.97	7.01
1	17	-	20038458.00	0.36862E-01	0.37182E-01	6.98	7.02
1	18	-	20171488.00	0.36985E-01	0.37308E-01	7.00	7.04
1	19	-	20304518.00	0.37109E-01	0.37434E-01	7.01	7.05
1	20	-	20437548.00	0.37234E-01	0.37562E-01	7.02	7.06
1	21	-	20513254.00	0.37234E-01	0.37562E-01	0.992	0.998
1	22	-	20588960.00	0.37234E-01	0.37562E-01	0.992	0.998
1	23	-	20664666.00	0.37234E-01	0.37562E-01	0.992	0.998
1	24	-	20740372.00	0.37234E-01	0.37562E-01	0.992	0.998
1	24	9	20740372.00	0.37234E-01	0.37562E-01	0.943	0.948

FINAL RESULTS:
Critical Crack Size has NOT been reached.

at Cycle No. 62675.00
of Load Step No. 9 Description: None
of Block No. 24
of Schedule No. 1

Crack Sizes: a = 0.372337E-01 , c = 0.375619E-01 , a/c = 0.9913
Total Cycles = 20740372.

Prepared By	Name/Date Saike Wang / 3/11/03	LOCKHEED MARTIN Science, Engineering, Analysis, & Test *Mechanical Systems Analysis Department*	File Name conflange_fract.doc
Checked By	3/12/03		Drawing No. SDG39135778
Title: Conical flange Fracture analysis			

CC02

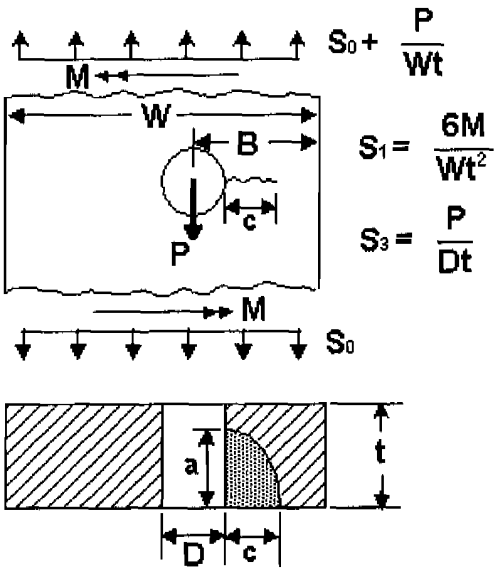

Conical Flange CC02 Model STA VC spectrum

Material:	2219-T62 Al. Aly.
NASA/FLAGRO Crack case type:	CC02
Section Properties:	
Plate width	W = 2.0 in.
Hole to Plate Edge	B= 0.5 in.
Plate thickness	t = 0.5 in.
Hole diameter	D = 0.272 in.
Crack Properties:	a = 0.025 in. c = 0.025 in.
Loads:	
Bolt shear load	P= 1584 lbf (Ref. R1016 on CBUSH Ele ID: 920086)
Relative Element Stress	S = 10965.61 psi (Ref. R1016 on Element ID: 212366 Max-Prin.)

Tensile Stresses

$S0 = Se + P/W*t = 10965.61 + 1584/2.0*0.5$
$= 12549.61$ psi

$S3 = P/D*T =$
$= 1584/0.272*0.5 = 11647$ psi

This relative element stress is located at the top edge of the upper conical flange. The stress is associated with CBUSH Element ID 920086. The dimensions of the top edge for the flanges are 0.5 inch thick, 2.0 inch wide, and 0.5 inch from hole center to outside edge. The diameter of the bolt hole is 0.272 inch.

The six spectrums under the Static Test Article vacuum case are used to run the NASGRO v4.0. The six spectrums include Truck transportation, Air transportation, Sine sweep, Acoustic, On-Orbit, and Launch/landing conditions.

The material data is used from Material ID M2IA11AB1, 2219-T62 Al of the NASGRO library, except that the UTS and YS are changed for the material property of the 2219-T62 Al. Aly. as per MIL-HDBK-5H, Page 3-166.

The truck, air, sine sweep, acoustic and on orbit spectrums are run for 1 mission with a scatter factor of 4 and the Launch/landing spectrum is run for 3 missions with a scatter factor of 4. The Conical Flanges are classified as low risk. The low risk crack sizes a= 0.025 in and a/c = 1.0 in are used (Ref. JSC25863A, Section 5.1.L.2.B.3).

```
                    FATIGUE CRACK GROWTH ANALYSIS
                     ----------------------------
                    DATE: 31-Dec-02   TIME: 12:58:01
                    (NASGRO Version 4.02, September 2002.)
          U.S. customary units [inches, ksi, ksi sqrt(in)]

PROBLEM TITLE
-------------
STA VC Spectrums With 6 blocks

Crack Growth Model: Non Interaction
Ratio of growth increment to current crk size=  0.0050
Equation/Table    : NASGRO Equation

GEOMETRY
--------
MODEL: CC02-Corner crack from hole in plate (2D).

Plate Thickness, t  =    0.5000
Plate Width, W      =    2.0000
Hole Diameter, D    =    0.2720
Edge to Hole Ctr, B =    0.5000
Poisson s ratio     =    0.33
```

Compounding is NOT being used.
FLAW SIZE: (User specified)

a (init.) = 0.2500E-01
c (init.) = 0.2500E-01
a/c (init.) = 1.000

MATERIAL

MATL 1: 1000-9000 SERIES AL [**Manual data input**]
2000 series

Material Header Info.:

Material 1 Data ID: M2IA11AB1
Alloy Description : 2219-T62 Al

Alloy Cond/HT : Plt & Sht; L-T; LA; Room temp

Product Form :

Material Properties:

Matl: No.	UTS	YS	Kle	Klc	Ak	Bk	Thk	Kc	Keac
1	**54.0**	**36.0**	43.0	31.0	1.00	1.00	0.500	59.8	

Matl: No.	Crack Growth Eqn Constants C	n	p	q	DK1	Cth+	Alpha:Smax/:SIGo
1	0.200D-07	2.800	0.50	1.00	0.80	2.80	2.00 0.30

Small crack threshold parameters:
a0 = 0.00150
Limit of ratio DKth(S)/DKth(L) = 0.20

Cth+ = 0, Cth- = 0 are used at start only
STA VC Spectrums With 6 blocks
MODEL: CC02

FATIGUE SPECTRUM

[Note: Stress = Input Value * Scale Factor]
Stress Scaling Factors for Block Case: 1. **TRUCK1-STA**

Scale Factor for Stress S0: 0.12550
Scale Factor for Stress S1: 0.0000
Scale Factor for Stress S3: 0.11647

Stress Scaling Factors for Block Case: 2. **AIR1-STA**

Scale Factor for Stress S0: 0.12550
Scale Factor for Stress S1: 0.0000
Scale Factor for Stress S3: 0.11647

Stress Scaling Factors for Block Case: 3. **SINE-STA**

Scale Factor for Stress S0: 0.12550
Scale Factor for Stress S1: 0.0000
Scale Factor for Stress S3: 0.11647

Stress Scaling Factors for Block Case: 4. **ACOUSTIC-STA**

Scale Factor for Stress S0: 0.12550

```
Scale Factor for Stress S1:     0.0000
Scale Factor for Stress S3:    0.11647

Stress Scaling Factors for Block Case:  5.   GSFC

Scale Factor for Stress S0:    0.12550
Scale Factor for Stress S1:     0.0000
Scale Factor for Stress S3:    0.11647

Stress Scaling Factors for Block Case:  6.   ONORBIT1-STA

Scale Factor for Stress S0:    0.12550
Scale Factor for Stress S1:     0.0000
Scale Factor for Stress S3:    0.11647

Schedule info. was input manually

Total No. of Blocks in Schedule =     32

   Block Number and Case Correspondences
 Block Number                    Block Case No.
From    -   To
    1   -      4                        1
    5   -      8                        2
    9   -     12                        3
   13   -     16                        4
   17   -     28                        5
   29   -     32                        6

Stresses: Tension, bending or pin

STA VC Spectrums With 6 blocks
MODEL: CC02

FATIGUE SCHEDULE BLOCK INPUT TABLE
----------------------------------
BLOCK CASE NO.  1.   TRUCK1-STA

 S  : M:  NUMBER     :        S0          :        S1          :
 T  : A:    OF       :                    :                    :
 E  : T:  FATIGUE    :                    :                    :
 P  : L:  CYCLES     :    (t1)  :  (t2)    :    (t1)  :  (t2)   :
----:--:------------:---------:---------:---------:---------:
   1: 1:     1444.00 :    28.40:   -28.40:    28.40:   -28.40:
   2: 1:     1765.00 :    20.50:   -20.50:    20.50:   -20.50:
   3: 1:    11234.00 :    14.80:   -14.80:    14.80:   -14.80:
   4: 1:    31937.00 :    10.60:   -10.60:    10.60:   -10.60:
   5: 1:    90836.00 :     7.60:    -7.60:     7.60:    -7.60:
   6: 1:   123736.00 :     5.60:    -5.60:     5.60:    -5.60:
   7: 1:   160648.00 :     4.00:    -4.00:     4.00:    -4.00:
   8: 1:  1184080.00 :     3.30:    -3.30:     3.30:    -3.30:

 S  : M:  NUMBER     :        S3          :
 T  : A:    OF       :                    :
 E  : T:  FATIGUE    :                    :
 P  : L:  CYCLES     :    (t1)  :  (t2)    :
----:--:------------:---------:---------:
   1: 1:     1444.00 :    28.40:   -28.40:
   2: 1:     1765.00 :    20.50:   -20.50:
   3: 1:    11234.00 :    14.80:   -14.80:
   4: 1:    31937.00 :    10.60:   -10.60:
   5: 1:    90836.00 :     7.60:    -7.60:
   6: 1:   123736.00 :     5.60:    -5.60:
   7: 1:   160648.00 :     4.00:    -4.00:
   8: 1:  1184080.00 :     3.30:    -3.30:

Environmental Crack Growth Check for Sustained Stresses
(Kmax less than Keac):  NOT SET
                        -------
```

BLOCK CASE NO. 2. **AIR1-STA**

S T E P	M: A: T: L:	NUMBER OF FATIGUE CYCLES	S0 (t1)	S0 (t2)	S1 (t1)	S1 (t2)
1:	1:	17832.00	36.00:	-36.00:	36.00:	-36.00:
2:	1:	594.00	36.00:	-36.00:	36.00:	-36.00:
3:	1:	1069920.00	11.00:	-11.00:	11.40:	-11.40:
4:	1:	30.00	36.00:	-36.00:	36.00:	-36.00:
5:	1:	17832.00	36.00:	-36.00:	36.00:	-36.00:

S T E P	M: A: T: L:	NUMBER OF FATIGUE CYCLES	S3 (t1)	S3 (t2)
1:	1:	17832.00	36.00:	-36.00:
2:	1:	594.00	36.00:	-36.00:
3:	1:	1069920.00	11.40:	-11.40:
4:	1:	30.00	36.00:	-36.00:
5:	1:	17832.00	36.00:	-36.00:

Environmental Crack Growth Check for Sustained Stresses
(Kmax less than Keac): NOT SET

BLOCK CASE NO. 3. **SINE-STA**

S T E P	M: A: T: L:	NUMBER OF FATIGUE CYCLES	S0 (t1)	S0 (t2)	S1 (t1)	S1 (t2)
1:	1:	121.00	104.50:	-104.50:	104.50:	-104.50:
2:	1:	121.00	82.20:	-82.20:	82.20:	-82.20:
3:	1:	121.00	107.20:	-107.20:	107.20:	-107.20:

S T E P	M: A: T: L:	NUMBER OF FATIGUE CYCLES	S3 (t1)	S3 (t2)
1:	1:	121.00	104.50:	-104.50:
2:	1:	121.00	82.20:	-82.20:
3:	1:	121.00	107.20:	-107.20:

Environmental Crack Growth Check for Sustained Stresses
(Kmax less than Keac): NOT SET

BLOCK CASE NO. 4. **ACOUSTIC-STA**

S T E P	M: A: T: L:	NUMBER OF FATIGUE CYCLES	S0 (t1)	S0 (t2)	S1 (t1)	S1 (t2)
1:	1:	9000.00	10.00:	-10.00:	10.00:	-10.00:

S T E P	M: A: T: L:	NUMBER OF FATIGUE CYCLES	S3 (t1)	S3 (t2)
1:	1:	9000.00	10.00:	-10.00:

Environmental Crack Growth Check for Sustained Stresses
(Kmax less than Keac): NOT SET

BLOCK CASE NO. 5. **GSFC**

S T E P	M: A: T: L:	NUMBER OF FATIGUE CYCLES	S0 (t1)	S0 (t2)	S1 (t1)	S1 (t2)
1:	1:	2.00	-100.00:	100.00:	-100.00:	100.00:
2:	1:	4.00	-90.00:	90.00:	-90.00:	90.00:
3:	1:	8.00	-80.00:	80.00:	-80.00:	80.00:
4:	1:	15.00	-70.00:	70.00:	-70.00:	70.00:
5:	1:	49.00	-60.00:	60.00:	-60.00:	60.00:
6:	1:	81.00	-50.00:	50.00:	-50.00:	50.00:
7:	1:	178.00	-40.00:	40.00:	-40.00:	40.00:
8:	1:	641.00	-30.00:	30.00:	-30.00:	30.00:
9:	1:	3120.00	-20.00:	20.00:	-20.00:	20.00:
10:	1:	3405.00	-10.00:	10.00:	-10.00:	10.00:
11:	1:	5019.00	-7.00:	7.00:	-7.00:	7.00:
12:	1:	28853.00	-5.00:	5.00:	-5.00:	5.00:
13:	1:	91655.00	-3.00:	3.00:	-3.00:	3.00:

S T E P	M: A: T: L:	NUMBER OF FATIGUE CYCLES	S3 (t1)	S3 (t2)
1:	1:	2.00	-100.00:	100.00:
2:	1:	4.00	-90.00:	90.00:
3:	1:	8.00	-80.00:	80.00:
4:	1:	15.00	-70.00:	70.00:
5:	1:	49.00	-60.00:	60.00:
6:	1:	81.00	-50.00:	50.00:
7:	1:	178.00	-40.00:	40.00:
8:	1:	641.00	-30.00:	30.00:
9:	1:	3120.00	-20.00:	20.00:
10:	1:	3405.00	-10.00:	10.00:
11:	1:	5019.00	-7.00:	7.00:
12:	1:	28853.00	-5.00:	5.00:
13:	1:	91655.00	-3.00:	3.00:

Environmental Crack Growth Check for Sustained Stresses
(Kmax less than Keac): NOT SET

BLOCK CASE NO. 6. **ONORBIT1-STA**

S T E P	M: A: T: L:	NUMBER OF FATIGUE CYCLES	S0 (t1)	S0 (t2)	S1 (t1)	S1 (t2)
1:	1:	34.00	1.02:	-1.02:	1.02:	-1.02:
2:	1:	34.00	0.81:	-0.81:	0.81:	-0.81:
3:	1:	60.00	0.61:	-0.61:	0.61:	-0.61:
4:	1:	179.00	0.41:	-0.41:	0.41:	-0.41:
5:	1:	117.00	1.02:	-1.02:	1.02:	-1.02:
6:	1:	414.00	0.81:	-0.81:	0.81:	-0.81:
7:	1:	2404.00	0.61:	-0.61:	0.61:	-0.61:
8:	1:	9789.00	0.41:	-0.41:	0.41:	-0.41:
9:	1:	62675.00	0.20:	-0.20:	0.20:	-0.20:

S T E P	M: A: T: L:	NUMBER OF FATIGUE CYCLES	S3 (t1)	S3 (t2)

1:	1:	34.00 :	1.02:	-1.02:
2:	1:	34.00 :	0.81:	-0.81:
3:	1:	60.00 :	0.61:	-0.61:
4:	1:	179.00 :	0.41:	-0.41:
5:	1:	117.00 :	1.02:	-1.02:
6:	1:	414.00 :	0.81:	-0.81:
7:	1:	2404.00 :	0.61:	-0.61:
8:	1:	9789.00 :	0.41:	-0.41:
9:	1:	62675.00 :	0.20:	-0.20:

Environmental Crack Growth Check for Sustained Stresses
(Kmax less than Keac): NOT SET

STA VC Spectrums With 6 blocks
MODEL: CC02

FATIGUE SCHEDULE BLOCK STRESS TABLE

S T E P	M: A: T: L:	NUMBER OF FATIGUE CYCLES	S0 (ksi) (t1)	S0 (ksi) (t2)	S1 (ksi) (t1)	S1 (ksi) (t2)
1:	1:	1444.00 :	3.56:	-3.56:	0.00:	0.00:
2:	1:	1765.00 :	2.57:	-2.57:	0.00:	0.00:
3:	1:	11234.00 :	1.86:	-1.86:	0.00:	0.00:
4:	1:	31937.00 :	1.33:	-1.33:	0.00:	0.00:
5:	1:	90836.00 :	0.95:	-0.95:	0.00:	0.00:
6:	1:	123736.00 :	0.70:	-0.70:	0.00:	0.00:
7:	1:	160648.00 :	0.50:	-0.50:	0.00:	0.00:
8:	1:	1184080.00 :	0.41:	-0.41:	0.00:	0.00:

S T E P	M: A: T: L:	NUMBER OF FATIGUE CYCLES	S3 (ksi) (t1)	S3 (ksi) (t2)
1:	1:	1444.00 :	3.31:	-3.31:
2:	1:	1765.00 :	2.39:	-2.39:
3:	1:	11234.00 :	1.72:	-1.72:
4:	1:	31937.00 :	1.23:	-1.23:
5:	1:	90836.00 :	0.89:	-0.89:
6:	1:	123736.00 :	0.65:	-0.65:
7:	1:	160648.00 :	0.47:	-0.47:
8:	1:	1184080.00 :	0.38:	-0.38:

Environmental Crack Growth Check for Sustained Stresses
(Kmax less than Keac): NOT SET

STA VC Spectrums With 6 blocks
MODEL: CC02

FATIGUE SCHEDULE BLOCK STRESS TABLE

S T E P	M: A: T: L:	NUMBER OF FATIGUE CYCLES	S0 (ksi) (t1)	S0 (ksi) (t2)	S1 (ksi) (t1)	S1 (ksi) (t2)
1:	1:	17832.00 :	4.52:	-4.52:	0.00:	0.00:
2:	1:	594.00 :	4.52:	-4.52:	0.00:	0.00:
3:	1:	1069920.00 :	1.38:	-1.38:	0.00:	0.00:
4:	1:	30.00 :	4.52:	-4.52:	0.00:	0.00:
5:	1:	17832.00 :	4.52:	-4.52:	0.00:	0.00:

S T E P	M: A: T: L:	NUMBER OF FATIGUE CYCLES	S3 (ksi) (t1)	S3 (ksi) (t2)

1:	1:	17832.00 :	4.19:	-4.19:
2:	1:	594.00 :	4.19:	-4.19:
3:	1:	1069920.00 :	1.33:	-1.33:
4:	1:	30.00 :	4.19:	-4.19:
5:	1:	17832.00 :	4.19:	-4.19:

Environmental Crack Growth Check for Sustained Stresses
(Kmax less than Keac): NOT SET

STA VC Spectrums With 6 blocks
MODEL: CC02

FATIGUE SCHEDULE BLOCK STRESS TABLE

S T E P	M: A: T: L:	NUMBER OF FATIGUE CYCLES	S0 (ksi) (t1)	S0 (ksi) (t2)	S1 (ksi) (t1)	S1 (ksi) (t2)
1:	1:	121.00 :	13.11:	-13.11:	0.00:	0.00:
2:	1:	121.00 :	10.32:	-10.32:	0.00:	0.00:
3:	1:	121.00 :	13.45:	-13.45:	0.00:	0.00:

S T E P	M: A: T: L:	NUMBER OF FATIGUE CYCLES	S3 (ksi) (t1)	S3 (ksi) (t2)
1:	1:	121.00 :	12.17:	-12.17:
2:	1:	121.00 :	9.57:	-9.57:
3:	1:	121.00 :	12.49:	-12.49:

Environmental Crack Growth Check for Sustained Stresses
(Kmax less than Keac): NOT SET

STA VC Spectrums With 6 blocks
MODEL: CC02

FATIGUE SCHEDULE BLOCK STRESS TABLE

S T E P	M: A: T: L:	NUMBER OF FATIGUE CYCLES	S0 (ksi) (t1)	S0 (ksi) (t2)	S1 (ksi) (t1)	S1 (ksi) (t2)
1:	1:	9000.00 :	1.25:	-1.25:	0.00:	0.00:

S T E P	M: A: T: L:	NUMBER OF FATIGUE CYCLES	S3 (ksi) (t1)	S3 (ksi) (t2)
1:	1:	9000.00 :	1.16:	-1.16:

Environmental Crack Growth Check for Sustained Stresses
(Kmax less than Keac): NOT SET

STA VC Spectrums With 6 blocks
MODEL: CC02

FATIGUE SCHEDULE BLOCK STRESS TABLE

S T E P	M: A: T: L:	NUMBER OF FATIGUE CYCLES	S0 (ksi) (t1)	S0 (ksi) (t2)	S1 (ksi) (t1)	S1 (ksi) (t2)

1:	1:	2.00 :	-12.55:	12.55:	0.00:	0.00:
2:	1:	4.00 :	-11.29:	11.29:	0.00:	0.00:
3:	1:	8.00 :	-10.04:	10.04:	0.00:	0.00:
4:	1:	15.00 :	-8.78:	8.78:	0.00:	0.00:
5:	1:	49.00 :	-7.53:	7.53:	0.00:	0.00:
6:	1:	81.00 :	-6.27:	6.27:	0.00:	0.00:
7:	1:	178.00 :	-5.02:	5.02:	0.00:	0.00:
8:	1:	641.00 :	-3.76:	3.76:	0.00:	0.00:
9:	1:	3120.00 :	-2.51:	2.51:	0.00:	0.00:
10:	1:	3405.00 :	-1.25:	1.25:	0.00:	0.00:
11:	1:	5019.00 :	-0.88:	0.88:	0.00:	0.00:
12:	1:	28853.00 :	-0.63:	0.63:	0.00:	0.00:
13:	1:	91655.00 :	-0.38:	0.38:	0.00:	0.00:

S T E P	M: A: T: L:	NUMBER OF FATIGUE CYCLES	S3 (ksi) (t1)	(t2)
1:	1:	2.00 :	-11.65:	11.65:
2:	1:	4.00 :	-10.48:	10.48:
3:	1:	8.00 :	-9.32:	9.32:
4:	1:	15.00 :	-8.15:	8.15:
5:	1:	49.00 :	-6.99:	6.99:
6:	1:	81.00 :	-5.82:	5.82:
7:	1:	178.00 :	-4.66:	4.66:
8:	1:	641.00 :	-3.49:	3.49:
9:	1:	3120.00 :	-2.33:	2.33:
10:	1:	3405.00 :	-1.16:	1.16:
11:	1:	5019.00 :	-0.82:	0.82:
12:	1:	28853.00 :	-0.58:	0.58:
13:	1:	91655.00 :	-0.35:	0.35:

Environmental Crack Growth Check for Sustained Stresses
(Kmax less than Keac): NOT SET

STA VC Spectrums With 6 blocks
MODEL: CC02

FATIGUE SCHEDULE BLOCK STRESS TABLE

S T E P	M: A: T: L:	NUMBER OF FATIGUE CYCLES	S0 (ksi) (t1)	(t2)	S1 (ksi) (t1)	(t2)
1:	1:	34.00 :	0.13:	-0.13:	0.00:	0.00:
2:	1:	34.00 :	0.10:	-0.10:	0.00:	0.00:
3:	1:	60.00 :	0.08:	-0.08:	0.00:	0.00:
4:	1:	179.00 :	0.05:	-0.05:	0.00:	0.00:
5:	1:	117.00 :	0.13:	-0.13:	0.00:	0.00:
6:	1:	414.00 :	0.10:	-0.10:	0.00:	0.00:
7:	1:	2404.00 :	0.08:	-0.08:	0.00:	0.00:
8:	1:	9789.00 :	0.05:	-0.05:	0.00:	0.00:
9:	1:	62675.00 :	0.03:	-0.03:	0.00:	0.00:

S T E P	M: A: T: L:	NUMBER OF FATIGUE CYCLES	S3 (ksi) (t1)	(t2)
1:	1:	34.00 :	0.12:	-0.12:
2:	1:	34.00 :	0.09:	-0.09:
3:	1:	60.00 :	0.07:	-0.07:
4:	1:	179.00 :	0.05:	-0.05:
5:	1:	117.00 :	0.12:	-0.12:
6:	1:	414.00 :	0.09:	-0.09:

```
 7: 1:      2404.00 :      0.07:     -0.07:
 8: 1:      9789.00 :      0.05:     -0.05:
 9: 1:     62675.00 :      0.02:     -0.02:

Environmental Crack Growth Check for Sustained Stresses
(Kmax less than Keac):  NOT SET
                        -------

STA VC Spectrums With 6 blocks
MODEL: CC02


ANALYSIS RESULTS:
-----------------
```

Schedule	Block	Step	Cycles	Crack a	Crack c	Max Kmax(a)	Max Kmax(c)
0	0	0	0.00	0.25000E-01	0.25000E-01	-	-
1	1	-	1605680.00	0.25241E-01	0.25110E-01	2.62	2.23
1	2	-	3211360.00	0.25483E-01	0.25223E-01	2.63	2.24
1	3	-	4817040.00	0.25728E-01	0.25339E-01	2.63	2.25
1	4	-	6422720.00	0.25975E-01	0.25457E-01	2.64	2.25
1	5	-	7528928.00	0.33039E-01	0.29899E-01	3.57	3.10
1	6	-	8635136.00	0.41663E-01	0.35474E-01	3.81	3.31
1	7	-	9741344.00	0.54891E-01	0.42507E-01	4.06	3.59
1	8	-	10847552.00	0.72440E-01	0.51653E-01	4.32	3.85
1	9	-	10847915.00	0.75754E-01	0.53935E-01	13.0	11.6
1	10	-	10848278.00	0.79214E-01	0.56274E-01	13.2	11.7
1	11	-	10848641.00	0.82822E-01	0.58673E-01	13.4	11.7
1	12	-	10849004.00	0.86579E-01	0.61133E-01	13.5	11.8
1	13	-	10858004.00	0.86613E-01	0.61133E-01	1.26	1.10
1	14	-	10867004.00	0.86647E-01	0.61133E-01	1.26	1.11
1	15	-	10876004.00	0.86681E-01	0.61133E-01	1.26	1.11
1	16	-	10885004.00	0.86715E-01	0.61133E-01	1.26	1.11
1	17	-	11018034.00	0.87583E-01	0.61692E-01	12.6	11.1
1	18	-	11151064.00	0.88458E-01	0.62255E-01	12.7	11.1
1	19	-	11284094.00	0.89342E-01	0.62821E-01	12.7	11.1
1	20	-	11417124.00	0.90233E-01	0.63390E-01	12.7	11.1
1	21	-	11550154.00	0.91131E-01	0.63963E-01	12.8	11.1
1	22	-	11683184.00	0.92037E-01	0.64539E-01	12.8	11.2
1	23	-	11816214.00	0.92951E-01	0.65118E-01	12.8	11.2
1	24	-	11949244.00	0.93872E-01	0.65700E-01	12.9	11.2
1	25	-	12082274.00	0.94801E-01	0.66286E-01	12.9	11.2
1	26	-	12215304.00	0.95737E-01	0.66876E-01	12.9	11.2
1	27	-	12348334.00	0.96682E-01	0.67468E-01	13.0	11.3
1	28	-	12481364.00	0.97633E-01	0.68065E-01	13.0	11.3
1	29	-	12557070.00	0.97633E-01	0.68065E-01	0.133	0.115
1	30	-	12632776.00	0.97633E-01	0.68065E-01	0.133	0.115
1	31	-	12708482.00	0.97633E-01	0.68065E-01	0.133	0.115
1	32	-	12784188.00	0.97633E-01	0.68065E-01	0.133	0.115
1	32	9	12784188.00	0.97633E-01	0.68065E-01	0.261E-01	0.226E-01

FINAL RESULTS:
Critical Crack Size has NOT been reached.

```
at Cycle No.      62675.00
of Load Step No.      9       Description: None
of Block No.         32
of Schedule No.       1

Crack Sizes:  a =  0.976333E-01  , c =  0.680645E-01 , a/c =   1.4344
Total Cycles =  12784188.
```

Prepared By	Name/Date Saike Wang / 3/11/03	LOCKHEED MARTIN Science, Engineering, Analysis, & Test *Mechanical Systems Analysis Department*	File Name conflange_fract.doc
Checked By	3/12/03		Drawing No. SDG39135778
Title: Conical flange Fracture analysis			

This analysis is for the conical flange CC02 model with the flight VC spectrum

Material:	2219-T62 Al. Aly.
NASA/FLAGRO Crack case type:	CC01
Section Properties: Plate width Plate thickness	 W = 0.5 in. t = 0.15 in.
Crack Properties:	a = 0.025 in. c = 0.025 in.
Loads:	
Max. Ele. Stress	S = 28080 psi (shown in the color plot) (Ref. R1016 on Element ID: 218235 Max-Principal stress)
Tensile Stress	S0= 28080 psi (assuming S as the tensile stress)

This max. tensile stress is located at the fourth ring counting from top. The dimensions of the ring are 0.15 inch thick and 0.5 inch wide.

The four spectrums under the Flight vacuum case are used to run the NASGRO v4.0. The four spectrums include Truck transportation, Air transportation, On-Orbit, and Launch/landing conditions.

The material data is used from Material ID M2IA11AB1, 2219-T62 Al of the NASGRO library, except that the UTS and YS are changed for the material property of the 2219-T62 Al. Aly. as per MIL-HDBK-5H, Page 3-166.

The truck, air and on orbit spectrums are run for 1 mission with a scatter factor of 4 and the Launch/landing spectrum is run for 3 missions with a scatter factor of 4. The Conical Flanges are classified as low risk. The low risk crack sizes a= 0.025 in and a/c = 1.0 in are used (Ref. JSC25863A, Section 5.1.L.2.B.3).

FATIGUE CRACK GROWTH ANALYSIS

DATE: 31-Dec-02 TIME: 12:59:46
(NASGRO Version 4.02, September 2002.)
U.S. customary units [inches, ksi, ksi sqrt(in)]

PROBLEM TITLE

Flight VC Spectrums With Four Blocks

Crack Growth Model: Non Interaction
Ratio of growth increment to current crk size= 0.0050
Equation/Table : NASGRO Equation

GEOMETRY

MODEL: CC02-Corner crack from hole in plate (2D).

Plate Thickness, t = 0.5000
Plate Width, W = 2.0000
Hole Diameter, D = 0.2720
Edge to Hole Ctr, B = 0.5000
Poisson s ratio = 0.33

Compounding is NOT being used.
FLAW SIZE: (User specified)

a (init.) = 0.2500E-01
c (init.) = 0.2500E-01
a/c (init.) = 1.000

MATERIAL

MATL 1: 1000-9000 SERIES AL [**Manual data input**]
2000 series

Material Header Info.:

Material 1 Data ID: M2IA11AB1
Alloy Description : 2219-T62 Al

Alloy Cond/HT : Plt & Sht; L-T; LA; Room temp

Product Form :

Material Properties:

Matl: No.	UTS	YS	K1e	K1c	Ak	Bk	Thk	Kc	Keac
1	**54.0**	**36.0**	43.0	31.0	1.00	1.00	0.500	59.8	

Matl: No.	Crack Growth Eqn Constants C	n	p	q	DK1	Cth+	Alpha	Smax/SIGo
1	0.200D-07	2.800	0.50	1.00	0.80	2.80	2.00	0.30

Small crack threshold parameters:
a0 = 0.00150
Limit of ratio DKth(S)/DKth(L) = 0.20

Cth+ = 0, Cth- = 0 are used at start only
Flight VC Spectrums With Four Blocks
MODEL: CC02

FATIGUE SPECTRUM
[Note: Stress = Input Value * Scale Factor]

Stress Scaling Factors for Block Case: 1. **TRUCK2-VC**

Scale Factor for Stress S0: 0.12550
Scale Factor for Stress S1: 0.0000
Scale Factor for Stress S3: 0.11647

Stress Scaling Factors for Block Case: 2. **AIR2-VC**

Scale Factor for Stress S0: 0.12550
Scale Factor for Stress S1: 0.0000
Scale Factor for Stress S3: 0.11647

Stress Scaling Factors for Block Case: 3. **GSFC**

Scale Factor for Stress S0: 0.12550
Scale Factor for Stress S1: 0.0000
Scale Factor for Stress S3: 0.11647

Stress Scaling Factors for Block Case: 4. **ONORBIT2-VCMAGNET**

Scale Factor for Stress S0: 0.12550
Scale Factor for Stress S1: 0.0000
Scale Factor for Stress S3: 0.11647

Schedule info. was input manually

Total No. of Blocks in Schedule = 24

Block Number and Case Correspondences

Block Number From	-	To	Block Case No.
1	-	4	1
5	-	8	2
9	-	20	3
21	-	24	4

Stresses: Tension, bending or pin
Flight VC Spectrums With Four Blocks
MODEL: CC02

FATIGUE SCHEDULE BLOCK INPUT TABLE

BLOCK CASE NO. 1. **TRUCK2-VC**

S T P	M: A: L:	NUMBER OF FATIGUE CYCLES	S0 |t1)	S0 |t2)	S1 |t1)	S1 |t2)
1:	1:	3081.00 :	28.40:	-28.40:	28.40:	-28.40:
2:	1:	3766.00 :	20.50:	-20.50:	20.50:	-20.50:
3:	1:	23966.00 :	14.80:	-14.80:	14.80:	-14.80:
4:	1:	68133.00 :	10.60:	-10.60:	10.60:	-10.60:
5:	1:	193784.00 :	7.60:	-7.60:	7.60:	-7.60:
6:	1:	263971.00 :	5.60:	-5.60:	5.60:	-5.60:
7:	1:	342717.00 :	4.00:	-4.00:	4.00:	-4.00:
8:	1:	2526038.00 :	3.30:	-3.30:	3.30:	-3.30:

S T	M: A:	NUMBER OF	S3

E P	T: L:	FATIGUE CYCLES	(t1)	(t2)
1:	1:	3081.00	28.40:	-28.40:
2:	1:	3766.00	20.50:	-20.50:
3:	1:	23966.00	14.80:	-14.80:
4:	1:	68133.00	10.60:	-10.60:
5:	1:	193784.00	7.60:	-7.60:
6:	1:	263971.00	5.60:	-5.60:
7:	1:	342717.00	4.00:	-4.00:
8:	1:	2526038.00	3.30:	-3.30:

Environmental Crack Growth Check for Sustained Stresses
(Kmax less than Keac): NOT SET

BLOCK CASE NO. 2. **AIR2-VC**

S T E P	M: A: T: L:	NUMBER OF FATIGUE CYCLES	S0 (t1)	S0 (t2)	S1 (t1)	S1 (t2)
1:	1:	26748.00	36.00:	-36.00:	36.00:	-36.00:
2:	1:	892.00	36.00:	-36.00:	36.00:	-36.00:
3:	1:	1230408.00	11.00:	-11.00:	11.40:	-11.40:
4:	1:	45.00	36.00:	-36.00:	36.00:	-36.00:
5:	1:	26748.00	36.00:	-36.00:	36.00:	-36.00:

S T E P	M: A: T: L:	NUMBER OF FATIGUE CYCLES	S3 (t1)	S3 (t2)
1:	1:	26748.00	36.00:	-36.00:
2:	1:	892.00	36.00:	-36.00:
3:	1:	1230408.00	11.40:	-11.40:
4:	1:	45.00	36.00:	-36.00:
5:	1:	26748.00	36.00:	-36.00:

Environmental Crack Growth Check for Sustained Stresses
(Kmax less than Keac): NOT SET

BLOCK CASE NO. 3. **GSFC**

S T E P	M: A: T: L:	NUMBER OF FATIGUE CYCLES	S0 (t1)	S0 (t2)	S1 (t1)	S1 (t2)
1:	1:	2.00	-100.00:	100.00:	-100.00:	100.00:
2:	1:	4.00	-90.00:	90.00:	-90.00:	90.00:
3:	1:	8.00	-80.00:	80.00:	-80.00:	80.00:
4:	1:	15.00	-70.00:	70.00:	-70.00:	70.00:
5:	1:	49.00	-60.00:	60.00:	-60.00:	60.00:
6:	1:	81.00	-50.00:	50.00:	-50.00:	50.00:
7:	1:	178.00	-40.00:	40.00:	-40.00:	40.00:
8:	1:	641.00	-30.00:	30.00:	-30.00:	30.00:
9:	1:	3120.00	-20.00:	20.00:	-20.00:	20.00:
10:	1:	3405.00	-10.00:	10.00:	-10.00:	10.00:
11:	1:	5019.00	-7.00:	7.00:	-7.00:	7.00:
12:	1:	28853.00	-5.00:	5.00:	-5.00:	5.00:
13:	1:	91655.00	-3.00:	3.00:	-3.00:	3.00:

S T E P	M: A: T: L:	NUMBER OF FATIGUE CYCLES	S3 (t1)	S3 (t2)

1:	1:	2.00 :	-100.00:	100.00:
2:	1:	4.00 :	-90.00:	90.00:
3:	1:	8.00 :	-80.00:	80.00:
4:	1:	15.00 :	-70.00:	70.00:
5:	1:	49.00 :	-60.00:	60.00:
6:	1:	81.00 :	-50.00:	50.00:
7:	1:	178.00 :	-40.00:	40.00:
8:	1:	641.00 :	-30.00:	30.00:
9:	1:	3120.00 :	-20.00:	20.00:
10:	1:	3405.00 :	-10.00:	10.00:
11:	1:	5019.00 :	-7.00:	7.00:
12:	1:	28853.00 :	-5.00:	5.00:
13:	1:	91655.00 :	-3.00:	3.00:

Environmental Crack Growth Check for Sustained Stresses
(Kmax less than Keac): NOT SET

BLOCK CASE NO. 4. **ONORBIT2-VCMAGNET**

S T E P	M: A: T: L:	NUMBER OF FATIGUE CYCLES	S0 (t1)	S0 (t2)	S1 (t1)	S1 (t2)
1:	1:	34.00 :	14.10:	8.50:	14.10:	8.50:
2:	1:	34.00 :	13.90:	8.50:	13.90:	8.50:
3:	1:	60.00 :	13.70:	8.50:	13.70:	8.50:
4:	1:	179.00 :	13.50:	8.50:	13.50:	8.50:
5:	1:	117.00 :	14.10:	8.50:	14.10:	8.50:
6:	1:	414.00 :	13.90:	8.50:	13.90:	8.50:
7:	1:	2404.00 :	13.70:	8.50:	13.70:	8.50:
8:	1:	9789.00 :	13.50:	8.50:	13.50:	8.50:
9:	1:	62675.00 :	13.40:	8.50:	13.40:	8.50:

S T E P	M: A: T: L:	NUMBER OF FATIGUE CYCLES	S3 (t1)	S3 (t2)
1:	1:	34.00 :	14.10:	8.50:
2:	1:	34.00 :	13.90:	8.50:
3:	1:	60.00 :	13.70:	8.50:
4:	1:	179.00 :	13.50:	8.50:
5:	1:	117.00 :	14.10:	8.50:
6:	1:	414.00 :	13.90:	8.50:
7:	1:	2404.00 :	13.70:	8.50:
8:	1:	9789.00 :	13.50:	8.50:
9:	1:	62675.00 :	13.40:	8.50:

Environmental Crack Growth Check for Sustained Stresses
(Kmax less than Keac): NOT SET

Flight VC Spectrums With Four Blocks
MODEL: CC02

FATIGUE SCHEDULE BLOCK STRESS TABLE

S T E P	M: A: T: L:	NUMBER OF FATIGUE CYCLES	S0 (ksi) (t1)	S0 (ksi) (t2)	S1 (ksi) (t1)	S1 (ksi) (t2)
1:	1:	3081.00 :	3.56:	-3.56:	0.00:	0.00:
2:	1:	3766.00 :	2.57:	-2.57:	0.00:	0.00:
3:	1:	23966.00 :	1.86:	-1.86:	0.00:	0.00:
4:	1:	68133.00 :	1.33:	-1.33:	0.00:	0.00:
5:	1:	193784.00 :	0.95:	-0.95:	0.00:	0.00:

6:	1:	263971.00	: 0.70:	-0.70:	0.00:	0.00:
7:	1:	342717.00	: 0.50:	-0.50:	0.00:	0.00:
8:	1:	2526038.00	: 0.41:	-0.41:	0.00:	0.00:

S	M:	NUMBER	:	S3	:
T	A:	OF	:		:
E	T:	FATIGUE	:	(ksi)	:
P	L:	CYCLES	:	(t1) :	(t2) :
1:	1:	3081.00	:	3.31:	-3.31:
2:	1:	3766.00	:	2.39:	-2.39:
3:	1:	23966.00	:	1.72:	-1.72:
4:	1:	68133.00	:	1.23:	-1.23:
5:	1:	193784.00	:	0.89:	-0.89:
6:	1:	263971.00	:	0.65:	-0.65:
7:	1:	342717.00	:	0.47:	-0.47:
8:	1:	2526038.00	:	0.38:	-0.38:

Environmental Crack Growth Check for Sustained Stresses
(Kmax less than Keac): NOT SET

Flight VC Spectrums With Four Blocks
MODEL: CC02

FATIGUE SCHEDULE BLOCK STRESS TABLE

S	M:	NUMBER	:	S0	:	S1	:
T	A:	OF	:		:		:
E	T:	FATIGUE	:	(ksi)	:	(ksi)	:
P	L:	CYCLES	:	(t1) :	(t2) :	(t1) :	(t2) :
1:	1:	26748.00	:	4.52:	-4.52:	0.00:	0.00:
2:	1:	892.00	:	4.52:	-4.52:	0.00:	0.00:
3:	1:	1230408.00	:	1.38:	-1.38:	0.00:	0.00:
4:	1:	45.00	:	4.52:	-4.52:	0.00:	0.00:
5:	1:	26748.00	:	4.52:	-4.52:	0.00:	0.00:

S	M:	NUMBER	:	S3	:
T	A:	OF	:		:
E	T:	FATIGUE	:	(ksi)	:
P	L:	CYCLES	:	(t1) :	(t2) :
1:	1:	26748.00	:	4.19:	-4.19:
2:	1:	892.00	:	4.19:	-4.19:
3:	1:	1230408.00	:	1.33:	-1.33:
4:	1:	45.00	:	4.19:	-4.19:
5:	1:	26748.00	:	4.19:	-4.19:

Environmental Crack Growth Check for Sustained Stresses
(Kmax less than Keac): NOT SET

Flight VC Spectrums With Four Blocks
MODEL: CC02

FATIGUE SCHEDULE BLOCK STRESS TABLE

S	M:	NUMBER	:	S0	:	S1	:
T	A:	OF	:		:		:
E	T:	FATIGUE	:	(ksi)	:	(ksi)	:
P	L:	CYCLES	:	(t1) :	(t2) :	(t1) :	(t2) :
1:	1:	2.00	:	-12.55:	12.55:	0.00:	0.00:
2:	1:	4.00	:	-11.29:	11.29:	0.00:	0.00:
3:	1:	8.00	:	-10.04:	10.04:	0.00:	0.00:
4:	1:	15.00	:	-8.78:	8.78:	0.00:	0.00:
5:	1:	49.00	:	-7.53:	7.53:	0.00:	0.00:

6:	1:	81.00 :	-6.27:	6.27:	0.00:	0.00:
7:	1:	178.00 :	-5.02:	5.02:	0.00:	0.00:
8:	1:	641.00 :	-3.76:	3.76:	0.00:	0.00:
9:	1:	3120.00 :	-2.51:	2.51:	0.00:	0.00:
10:	1:	3405.00 :	-1.25:	1.25:	0.00:	0.00:
11:	1:	5019.00 :	-0.88:	0.88:	0.00:	0.00:
12:	1:	28853.00 :	-0.63:	0.63:	0.00:	0.00:
13:	1:	91655.00 :	-0.38:	0.38:	0.00:	0.00:

S T E P	M: A: T: L:	NUMBER OF FATIGUE CYCLES	S3 (ksi) (t1)	(t2)
1:	1:	2.00 :	-11.65:	11.65:
2:	1:	4.00 :	-10.48:	10.48:
3:	1:	8.00 :	-9.32:	9.32:
4:	1:	15.00 :	-8.15:	8.15:
5:	1:	49.00 :	-6.99:	6.99:
6:	1:	81.00 :	-5.82:	5.82:
7:	1:	178.00 :	-4.66:	4.66:
8:	1:	641.00 :	-3.49:	3.49:
9:	1:	3120.00 :	-2.33:	2.33:
10:	1:	3405.00 :	-1.16:	1.16:
11:	1:	5019.00 :	-0.82:	0.82:
12:	1:	28853.00 :	-0.58:	0.58:
13:	1:	91655.00 :	-0.35:	0.35:

Environmental Crack Growth Check for Sustained Stresses
(Kmax less than Keac): NOT SET

Flight VC Spectrums With Four Blocks
MODEL: CC02

FATIGUE SCHEDULE BLOCK STRESS TABLE

S T E P	M: A: T: L:	NUMBER OF FATIGUE CYCLES	S0 (ksi) (t1)	(t2)	S1 (ksi) (t1)	(t2)
1:	1:	34.00 :	1.77:	1.07:	0.00:	0.00:
2:	1:	34.00 :	1.74:	1.07:	0.00:	0.00:
3:	1:	60.00 :	1.72:	1.07:	0.00:	0.00:
4:	1:	179.00 :	1.69:	1.07:	0.00:	0.00:
5:	1:	117.00 :	1.77:	1.07:	0.00:	0.00:
6:	1:	414.00 :	1.74:	1.07:	0.00:	0.00:
7:	1:	2404.00 :	1.72:	1.07:	0.00:	0.00:
8:	1:	9789.00 :	1.69:	1.07:	0.00:	0.00:
9:	1:	62675.00 :	1.68:	1.07:	0.00:	0.00:

S T E P	M: A: T: L:	NUMBER OF FATIGUE CYCLES	S3 (ksi) (t1)	(t2)
1:	1:	34.00 :	1.64:	0.99:
2:	1:	34.00 :	1.62:	0.99:
3:	1:	60.00 :	1.60:	0.99:
4:	1:	179.00 :	1.57:	0.99:
5:	1:	117.00 :	1.64:	0.99:
6:	1:	414.00 :	1.62:	0.99:
7:	1:	2404.00 :	1.60:	0.99:
8:	1:	9789.00 :	1.57:	0.99:
9:	1:	62675.00 :	1.56:	0.99:

Environmental Crack Growth Check for Sustained Stresses
(Kmax less than Keac): NOT SET

Flight VC Spectrums With Four Blocks
MODEL: CC02

ANALYSIS RESULTS:

Schedule	Block	Step	Cycles	Crack a	Crack c	Max Kmax(a)	Max Kmax(c)
0	0	0	0.00	0.25000E-01	0.25000E-01	-	-
1	1	-	3425456.00	0.25516E-01	0.25239E-01	2.63	2.23
1	2	-	6850912.00	0.26042E-01	0.25491E-01	2.64	2.25
1	3	-	10276368.00	0.26576E-01	0.25755E-01	2.65	2.27
1	4	-	13701824.00	0.27121E-01	0.26032E-01	2.66	2.29
1	5	-	14986665.00	0.38638E-01	0.33435E-01	3.73	3.25
1	6	-	16271506.00	0.57079E-01	0.43879E-01	4.10	3.62
1	7	-	17556347.00	0.84598E-01	0.59497E-01	4.51	3.97
1	8	-	18841188.00	0.12356	0.82552E-01	4.94	4.27
1	9	-	18974218.00	0.12469	0.83258E-01	13.7	11.9
1	10	-	19107248.00	0.12583	0.83967E-01	13.8	11.9
1	11	-	19240278.00	0.12697	0.84681E-01	13.8	11.9
1	12	-	19373308.00	0.12812	0.85398E-01	13.8	11.9
1	13	-	19506338.00	0.12928	0.86120E-01	13.8	11.9
1	14	-	19639368.00	0.13045	0.86845E-01	13.9	12.0
1	15	-	19772398.00	0.13163	0.87575E-01	13.9	12.0
1	16	-	19905428.00	0.13281	0.88309E-01	13.9	12.0
1	17	-	20038458.00	0.13400	0.89046E-01	14.0	12.0
1	18	-	20171488.00	0.13520	0.89788E-01	14.0	12.1
1	19	-	20304518.00	0.13641	0.90534E-01	14.0	12.1
1	20	-	20437548.00	0.13762	0.91285E-01	14.1	12.1
1	21	-	20513254.00	0.13762	0.91285E-01	1.99	1.71
1	22	-	20588960.00	0.13762	0.91285E-01	1.99	1.71
1	23	-	20664666.00	0.13762	0.91285E-01	1.99	1.71
1	24	-	20740372.00	0.13762	0.91285E-01	1.99	1.71
1	24	9	20740372.00	0.13762	0.91285E-01	1.89	1.62

FINAL RESULTS:
Critical Crack Size has NOT been reached.

at Cycle No. 62675.00
of Load Step No. 9 Description: None
of Block No. 24
of Schedule No. 1

Crack Sizes: a = 0.137625 , c = 0.912849E-01 , a/c = 1.5076
Total Cycles = 20740372.

Prepared By	Name/Date Saike Wang / 3/11/03	LOCKHEED MARTIN Science, Engineering, Analysis, & Test *Mechanical Systems Analysis Department*	File Name conflange_fract.doc
Checked By	3/12/03		Drawing No. SDG39135778
Title: Conical flange Fracture analysis			

CC03

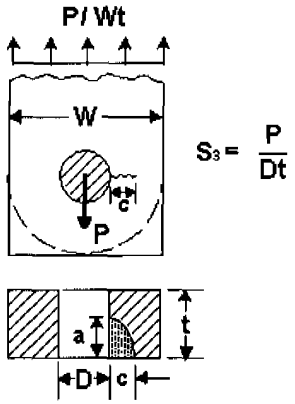

Conical Flange CC03 Model STA VC spectrum

Material:	2219-T62 Al. Aly.
NASA/FLAGRO Crack case type:	CC03
Section Properties:	
Plate width	W = 1.6526 in.
Plate thickness	t = 0.5 in.
Hole diameter	D = 0.272 in.
Crack Properties:	a = 0.025 in. c = 0.025 in.
Loads:	
Bolt shear load	P= 1584 lbf (Ref. R1016 on CBUSH Ele ID: 920086)
Tensile Stress	S3 = P/D*T= S3 = 1584/0.272*0.5=11647 psi

This relative CBUSH element stress is located at the top edge of the upper conical flange. The bolt shear load is associated with CBUSH Element ID 920086. The dimensions of the lug about the bolt hole are assumed as 0.5 inch thick and 1.6526 inch wide. The diameter of the bolt hole is 0.272 inch.

The six spectrums under the Static Test Article vacuum case are used to run the NASGRO v4.0. The six spectrums include Truck transportation, Air transportation, Sine sweep, Acoustic, On-Orbit, and Launch/landing conditions.

The material data is used from Material ID M2IA11AB1, 2219-T62 Al of the NASGRO library, except that the UTS and YS are changed for the material property of the 2219-T62 Al. Aly. as per MIL-HDBK-5H, Page 3-166.

The truck, air, sine sweep, acoustic and on orbit spectrums are run for 1 mission with a scatter factor of 4 and the Launch/landing spectrum is run for 3 missions with a scatter factor of 4. The Conical Flanges are classified as low risk. The low risk crack sizes a= 0.025 in and a/c = 1.0 in are used (Ref. JSC25863A, Section 5.1.L.2.B.3).

```
                    FATIGUE CRACK GROWTH ANALYSIS
                    -----------------------------
                  DATE: 31-Dec-02   TIME: 13:02:51
                  (NASGRO Version 4.02, September 2002.)
          U.S. customary units [inches, ksi, ksi sqrt(in)]

PROBLEM TITLE
-------------
STA VC Spectrums With 6 blocks

Crack Growth Model: Non Interaction
Ratio of growth increment to current crk size=  0.0050
Equation/Table     : NASGRO Equation

GEOMETRY
MODEL: CC03-Corner crack from hole in lug (2D).

Plate Thickness, t =     0.5000
Plate Width, W     =     1.6520
Hole Diameter, D   =     0.2720

FLAW SIZE: (User specified)

a  (init.) =  0.2500E-01
c  (init.) =  0.2500E-01
a/c (init.) =   1.000


MATERIAL
--------

MATL 1:   1000-9000 SERIES AL [**Manual data input**]
          2000 series

Material Header Info.:

Material  1 Data ID: M2IA11AB1
Alloy Description :   2219-T62 Al

Alloy Cond/HT :     Plt & Sht; L-T; LA; Room temp

Product Form :

Material Properties:

:Matl:  UTS :  YS  :  K1e :  K1c :  Ak :  Bk :  Thk  :  Kc  : Keac :
: No.:      :      :      :      :     :     :       :      :      :
```

```
:-----:------:------:------:------:-----:-----:-------:------:------:
:  1 :  54.0:  36.0:  43.0:  31.0: 1.00: 1.00:  0.500:  59.8:       :

:Matl:--------------- Crack Growth Eqn Constants --------------------:
: No.:     C     :  n  :  p :  q :  DK1 : Cth+ :Alpha:Smax/:
:    :           :     :    :    :       :      :     :SIGo :
:-----:----------:-----:----:----:------:------:-----:-----:
:  1 :0.200D-07:2.800:0.50:1.00:  0.80:  2.80: 2.00: 0.30:

Small crack threshold parameters:
a0 =      0.00150
Limit of ratio DKth(S)/DKth(L) =     0.20


Cth+ = 0, Cth- = 0 are used at start only
STA VC Spectrums With 6 blocks
MODEL: CC03

FATIGUE SPECTRUM

[Note: Stress = Input Value * Scale Factor]

Stress Scaling Factors for Block Case:  1.   TRUCK1-STA

Scale Factor for Stress S3:   0.11647

Stress Scaling Factors for Block Case:  2.   AIR1-STA

Scale Factor for Stress S3:   0.11647

Stress Scaling Factors for Block Case:  3.   SINE-STA

Scale Factor for Stress S3:   0.11647

Stress Scaling Factors for Block Case:  4.   ACOUSTIC-STA

Scale Factor for Stress S3:   0.11647

Stress Scaling Factors for Block Case:  5.   GSFC

Scale Factor for Stress S3:   0.11647

Stress Scaling Factors for Block Case:  6.   ONORBIT1-STA

Scale Factor for Stress S3:   0.11647

Schedule info. was input manually

Total No. of Blocks in Schedule =     32

   Block Number and Case Correspondences
 Block Number                  Block Case No.
From   -   To
    1   -      4                      1
    5   -      8                      2
    9   -     12                      3
   13   -     16                      4
   17   -     28                      5
   29   -     32                      6

Stresses: Tension, bending or pin

STA VC Spectrums With 6 blocks
MODEL: CC03

FATIGUE SCHEDULE BLOCK INPUT TABLE
----------------------------------

BLOCK CASE NO.  1.   TRUCK1-STA
```

S T E P	M: A: T: L:	NUMBER OF FATIGUE CYCLES	S3 (t1)	S3 (t2)	S (t1)	S (t2)
1:	1:	1444.00	28.40:	-28.40:	28.40:	-28.40:
2:	1:	1765.00	20.50:	-20.50:	20.50:	-20.50:
3:	1:	11234.00	14.80:	-14.80:	14.80:	-14.80:
4:	1:	31937.00	10.60:	-10.60:	10.60:	-10.60:
5:	1:	90836.00	7.60:	-7.60:	7.60:	-7.60:
6:	1:	123736.00	5.60:	-5.60:	5.60:	-5.60:
7:	1:	160648.00	4.00:	-4.00:	4.00:	-4.00:
8:	1:	1184080.00	3.30:	-3.30:	3.30:	-3.30:

Environmental Crack Growth Check for Sustained Stresses
(Kmax less than Keac): NOT SET

BLOCK CASE NO. 2. **AIR1-STA**

S T E P	M: A: T: L:	NUMBER OF FATIGUE CYCLES	S3 (t1)	S3 (t2)	S (t1)	S (t2)
1:	1:	17832.00	36.00:	-36.00:	36.00:	-36.00:
2:	1:	594.00	36.00:	-36.00:	36.00:	-36.00:
3:	1:	1069920.00	11.40:	-11.40:	11.40:	-11.40:
4:	1:	30.00	36.00:	-36.00:	36.00:	-36.00:
5:	1:	17832.00	36.00:	-36.00:	36.00:	-36.00:

Environmental Crack Growth Check for Sustained Stresses
(Kmax less than Keac): NOT SET

BLOCK CASE NO. 3. **SINE-STA**

S T E P	M: A: T: L:	NUMBER OF FATIGUE CYCLES	S3 (t1)	S3 (t2)	S (t1)	S (t2)
1:	1:	121.00	104.50:	-104.50:	104.50:	-104.50:
2:	1:	121.00	82.20:	-82.20:	82.20:	-82.20:
3:	1:	121.00	107.20:	-107.20:	107.20:	-107.20:

Environmental Crack Growth Check for Sustained Stresses
(Kmax less than Keac): NOT SET

BLOCK CASE NO. 4. **ACOUSTIC-STA**

S T E P	M: A: T: L:	NUMBER OF FATIGUE CYCLES	S3 (t1)	S3 (t2)	S (t1)	S (t2)
1:	1:	9000.00	10.00:	-10.00:	10.00:	-10.00:

Environmental Crack Growth Check for Sustained Stresses
(Kmax less than Keac): NOT SET

BLOCK CASE NO. 5. **GSFC**

S T E P	M: A: T: L:	NUMBER OF FATIGUE CYCLES	S3 (t1)	S3 (t2)	S (t1)	S (t2)

1: 1:	2.00 :	-100.00:	100.00:	-100.00:	100.00:
2: 1:	4.00 :	-90.00:	90.00:	-90.00:	90.00:
3: 1:	8.00 :	-80.00:	80.00:	-80.00:	80.00:
4: 1:	15.00 :	-70.00:	70.00:	-70.00:	70.00:
5: 1:	49.00 :	-60.00:	60.00:	-60.00:	60.00:
6: 1:	81.00 :	-50.00:	50.00:	-50.00:	50.00:
7: 1:	178.00 :	-40.00:	40.00:	-40.00:	40.00:
8: 1:	641.00 :	-30.00:	30.00:	-30.00:	30.00:
9: 1:	3120.00 :	-20.00:	20.00:	-20.00:	20.00:
10: 1:	3405.00 :	-10.00:	10.00:	-10.00:	10.00:
11: 1:	5019.00 :	-7.00:	7.00:	-7.00:	7.00:
12: 1:	28853.00 :	-5.00:	5.00:	-5.00:	5.00:
13: 1:	91655.00 :	-3.00:	3.00:	-3.00:	3.00:

Environmental Crack Growth Check for Sustained Stresses
(Kmax less than Keac): NOT SET

BLOCK CASE NO. 6. **ONORBIT1-STA**

S T E P	M: A: T: L:	NUMBER OF FATIGUE CYCLES	S3 (t1)	S3 (t2)	S (t1)	S (t2)
1:	1:	34.00 :	1.02:	-1.02:	1.02:	-1.02:
2:	1:	34.00 :	0.81:	-0.81:	0.81:	-0.81:
3:	1:	60.00 :	0.61:	-0.61:	0.61:	-0.61:
4:	1:	179.00 :	0.41:	-0.41:	0.41:	-0.41:
5:	1:	117.00 :	1.02:	-1.02:	1.02:	-1.02:
6:	1:	414.00 :	0.81:	-0.81:	0.81:	-0.81:
7:	1:	2404.00 :	0.61:	-0.61:	0.61:	-0.61:
8:	1:	9789.00 :	0.41:	-0.41:	0.41:	-0.41:
9:	1:	62675.00 :	0.20:	-0.20:	0.20:	-0.20:

Environmental Crack Growth Check for Sustained Stresses
(Kmax less than Keac): NOT SET

STA VC Spectrums With 6 blocks
MODEL: CC03

FATIGUE SCHEDULE BLOCK STRESS TABLE

S T E P	M: A: T: L:	NUMBER OF FATIGUE CYCLES	S3 (ksi) (t1)	S3 (ksi) (t2)	S (ksi) (t1)	S (ksi) (t2)
1:	1:	1444.00 :	3.31:	-3.31:	0.00:	0.00:
2:	1:	1765.00 :	2.39:	-2.39:	0.00:	0.00:
3:	1:	11234.00 :	1.72:	-1.72:	0.00:	0.00:
4:	1:	31937.00 :	1.23:	-1.23:	0.00:	0.00:
5:	1:	90836.00 :	0.89:	-0.89:	0.00:	0.00:
6:	1:	123736.00 :	0.65:	-0.65:	0.00:	0.00:
7:	1:	160648.00 :	0.47:	-0.47:	0.00:	0.00:
8:	1:	1184080.00 :	0.38:	-0.38:	0.00:	0.00:

Environmental Crack Growth Check for Sustained Stresses
(Kmax less than Keac): NOT SET

STA VC Spectrums With 6 blocks
MODEL: CC03

FATIGUE SCHEDULE BLOCK STRESS TABLE

S T E	M: A: T:	NUMBER OF FATIGUE	S3 (ksi)	S (ksi)

P	L:	CYCLES	(t1)	(t2)	(t1)	(t2)
1:	1:	17832.00	4.19:	-4.19:	0.00:	0.00:
2:	1:	594.00	4.19:	-4.19:	0.00:	0.00:
3:	1:	1069920.00	1.33:	-1.33:	0.00:	0.00:
4:	1:	30.00	4.19:	-4.19:	0.00:	0.00:
5:	1:	17832.00	4.19:	-4.19:	0.00:	0.00:

Environmental Crack Growth Check for Sustained Stresses
(Kmax less than Keac): NOT SET

STA VC Spectrums With 6 blocks
MODEL: CC03

FATIGUE SCHEDULE BLOCK STRESS TABLE

S T E P	M: A: T: L:	NUMBER OF FATIGUE CYCLES	S3 (ksi) (t1)	S3 (ksi) (t2)	S (ksi) (t1)	S (ksi) (t2)
1:	1:	121.00	12.17:	-12.17:	0.00:	0.00:
2:	1:	121.00	9.57:	-9.57:	0.00:	0.00:
3:	1:	121.00	12.49:	-12.49:	0.00:	0.00:

Environmental Crack Growth Check for Sustained Stresses
(Kmax less than Keac): NOT SET

STA VC Spectrums With 6 blocks
MODEL: CC03

FATIGUE SCHEDULE BLOCK STRESS TABLE

S T E P	M: A: T: L:	NUMBER OF FATIGUE CYCLES	S3 (ksi) (t1)	S3 (ksi) (t2)	S (ksi) (t1)	S (ksi) (t2)
1:	1:	9000.00	1.16:	-1.16:	0.00:	0.00:

Environmental Crack Growth Check for Sustained Stresses
(Kmax less than Keac): NOT SET

STA VC Spectrums With 6 blocks
MODEL: CC03

FATIGUE SCHEDULE BLOCK STRESS TABLE

S T E P	M: A: T: L:	NUMBER OF FATIGUE CYCLES	S3 (ksi) (t1)	S3 (ksi) (t2)	S (ksi) (t1)	S (ksi) (t2)
1:	1:	2.00	-11.65:	11.65:	0.00:	0.00:
2:	1:	4.00	-10.48:	10.48:	0.00:	0.00:
3:	1:	8.00	-9.32:	9.32:	0.00:	0.00:
4:	1:	15.00	-8.15:	8.15:	0.00:	0.00:
5:	1:	49.00	-6.99:	6.99:	0.00:	0.00:
6:	1:	81.00	-5.82:	5.82:	0.00:	0.00:
7:	1:	178.00	-4.66:	4.66:	0.00:	0.00:
8:	1:	641.00	-3.49:	3.49:	0.00:	0.00:
9:	1:	3120.00	-2.33:	2.33:	0.00:	0.00:
10:	1:	3405.00	-1.16:	1.16:	0.00:	0.00:
11:	1:	5019.00	-0.82:	0.82:	0.00:	0.00:

12: 1:	28853.00 :	-0.58:	0.58:	0.00:	0.00:
13: 1:	91655.00 :	-0.35:	0.35:	0.00:	0.00:

Environmental Crack Growth Check for Sustained Stresses
(Kmax less than Keac): NOT SET

STA VC Spectrums With 6 blocks
MODEL: CC03

FATIGUE SCHEDULE BLOCK STRESS TABLE

STEP	MATL	NUMBER OF FATIGUE CYCLES	S3 (ksi) (t1)	S3 (ksi) (t2)	S (ksi) (t1)	S (ksi) (t2)
1:	1:	34.00 :	0.12:	-0.12:	0.00:	0.00:
2:	1:	34.00 :	0.09:	-0.09:	0.00:	0.00:
3:	1:	60.00 :	0.07:	-0.07:	0.00:	0.00:
4:	1:	179.00 :	0.05:	-0.05:	0.00:	0.00:
5:	1:	117.00 :	0.12:	-0.12:	0.00:	0.00:
6:	1:	414.00 :	0.09:	-0.09:	0.00:	0.00:
7:	1:	2404.00 :	0.07:	-0.07:	0.00:	0.00:
8:	1:	9789.00 :	0.05:	-0.05:	0.00:	0.00:
9:	1:	62675.00 :	0.02:	-0.02:	0.00:	0.00:

Environmental Crack Growth Check for Sustained Stresses
(Kmax less than Keac): NOT SET

STA VC Spectrums With 6 blocks
MODEL: CC03

ANALYSIS RESULTS:

Schedule	Block	Step	Cycles	Crack a	Crack c	Max Kmax(a)	Max Kmax(c)
0	0	0	0.00	0.25000E-01	0.25000E-01	-	-
1	1	-	1605680.00	0.25000E-01	0.25000E-01	0.751	0.593
1	2	-	3211360.00	0.25000E-01	0.25000E-01	0.751	0.593
1	3	-	4817040.00	0.25000E-01	0.25000E-01	0.751	0.593
1	4	-	6422720.00	0.25000E-01	0.25000E-01	0.751	0.593
1	5	-	7528928.00	0.25000E-01	0.25000E-01	0.952	0.751
1	6	-	8635136.00	0.25000E-01	0.25000E-01	0.952	0.751
1	7	-	9741344.00	0.25000E-01	0.25000E-01	0.952	0.751
1	8	-	10847552.00	0.25000E-01	0.25000E-01	0.952	0.751
1	9	-	10847915.00	0.25008E-01	0.25004E-01	2.83	2.24
1	10	-	10848278.00	0.25008E-01	0.25004E-01	2.83	2.24
1	11	-	10848641.00	0.25008E-01	0.25004E-01	2.83	2.24
1	12	-	10849004.00	0.25008E-01	0.25004E-01	2.83	2.24
1	13	-	10858004.00	0.25008E-01	0.25004E-01	0.264	0.209
1	14	-	10867004.00	0.25008E-01	0.25004E-01	0.264	0.209
1	15	-	10876004.00	0.25008E-01	0.25004E-01	0.264	0.209
1	16	-	10885004.00	0.25008E-01	0.25004E-01	0.264	0.209
1	17	-	11018034.00	0.25008E-01	0.25004E-01	2.64	2.09
1	18	-	11151064.00	0.25008E-01	0.25004E-01	2.64	2.09
1	19	-	11284094.00	0.25008E-01	0.25004E-01	2.64	2.09
1	20	-	11417124.00	0.25008E-01	0.25004E-01	2.64	2.09
1	21	-	11550154.00	0.25008E-01	0.25004E-01	2.64	2.09
1	22	-	11683184.00	0.25008E-01	0.25004E-01	2.64	2.09
1	23	-	11816214.00	0.25008E-01	0.25004E-01	2.64	2.09
1	24	-	11949244.00	0.25008E-01	0.25004E-01	2.64	2.09
1	25	-	12082274.00	0.25008E-01	0.25004E-01	2.64	2.09
1	26	-	12215304.00	0.25008E-01	0.25004E-01	2.64	2.09
1	27	-	12348334.00	0.25008E-01	0.25004E-01	2.64	2.09
1	28	-	12481364.00	0.25008E-01	0.25004E-01	2.64	2.09
1	29	-	12557070.00	0.25008E-01	0.25004E-01	0.270E-01	0.213E-01
1	30	-	12632776.00	0.25008E-01	0.25004E-01	0.270E-01	0.213E-01
1	31	-	12708482.00	0.25008E-01	0.25004E-01	0.270E-01	0.213E-01

1	32	-	12784188.00	0.25008E-01	0.25004E-01	0.270E-01	0.213E-01
1	32	9	12784188.00	0.25008E-01	0.25004E-01	0.529E-02	0.418E-02

FINAL RESULTS:
Critical Crack Size has NOT been reached.

at Cycle No. 62675.00
of Load Step No. 9 Description: None
of Block No. 32
of Schedule No. 1

Crack Sizes: a = 0.250080E-01 , c = 0.250036E-01 , a/c = 1.0002
Total Cycles = 12784188.

Prepared By	Name/Date Saike Wang / 3/11/03	**LOCKHEED MARTIN** **Science, Engineering, Analysis, & Test** *Mechanical Systems Analysis Department*	File Name conflange_fract.doc
Checked By	3/12/03		Drawing No. SDG39135778
Title: Conical flange Fracture analysis			

This analysis is for the conical flange for the Flight VC spectrum

Material:	2219-T62 Al. Aly.
NASA/FLAGRO Crack case type:	CC03
Section Properties:	
Plate width	W = 1.6526 in.
Plate thickness	t = 0.5 in.
Hole diameter	D = 0.272 in.
Crack Properties:	a = 0.025 in. c = 0.025 in.
Loads:	
Bolt shear load	P= 1584 lbf (Ref. R1016 on CBUSH Ele ID: 920086)
Tensile Stress	S3 = P/D*T = 1584/0.272*0.5=11647 psi

This relative CBUSH element stress is located at the top edge of the upper conical flange. The bolt shear load is associated with CBUSH Element ID 920086. The dimensions of the lug about the bolthole are assumed as 0.5 inch thick and 1.6526 inch wide. The diameter of the bolt hole is 0.272 inch.

The four spectrums under the Flight vacuum case are used to run the NASGRO v4.0. The six spectrums include Truck transportation, Air transportation, On-Orbit, Launch/landing conditions.

The material data is used from Material ID M2IA11AB1, 2219-T62 Al of the NASGRO library, except that the UTS and YS are changed for the material property of the 2219-T62 Al. Aly. as per MIL-HDBK-5H, Page 3-166.

The truck, air and on orbit spectrums are run for 1 mission with a scatter factor of 4 and the Launch/landing spectrum is run for 3 missions with a scatter factor of 4. The Conical Flanges are classified as low risk. The low risk crack sizes a= 0.025 in and a/c = 1.0 in are used (Ref. JSC25863A, Section 5.1.L.2.B.3).

FATIGUE CRACK GROWTH ANALYSIS

DATE: 31-Dec-02 TIME: 13:07:54
(NASGRO Version 4.02, September 2002.)
U.S. customary units [inches, ksi, ksi sqrt(in)]

PROBLEM TITLE

Flight VC Spectrums With Four Blocks

Crack Growth Model: Non Interaction
Ratio of growth increment to current crk size= 0.0050
Equation/Table : NASGRO Equation

GEOMETRY
MODEL: CC03-Corner crack from hole in lug (2D).

Plate Thickness, t = 0.5000
Plate Width, W = 1.6526
Hole Diameter, D = 0.2720

FLAW SIZE: (User specified)

a (init.) = 0.2500E-01
c (init.) = 0.2500E-01
a/c (init.) = 1.000

MATERIAL

MATL 1: 1000-9000 SERIES AL [**Manual data input**]
2000 series

Material Header Info.:

Material 1 Data ID: M2IA11AB1
Alloy Description : 2219-T62 Al

Alloy Cond/HT : Plt & Sht; L-T; LA; Room temp

Product Form :

Material Properties:

Matl No.	UTS	YS	K1e	K1c	Ak	Bk	Thk	Kc	Keac
1	**54.0**	**36.0**	43.0	31.0	1.00	1.00	0.500	59.8	

Matl No.	Crack Growth Eqn Constants							
	C	n	p	q	DK1	Cth+	Alpha	Smax/SIGo
1	0.200D-07	2.800	0.50	1.00	0.80	2.80	2.00	0.30

Small crack threshold parameters:
a0 = 0.00150
Limit of ratio DKth(S)/DKth(L) = 0.20

Cth+ = 0, Cth- = 0 are used at start only
Flight VC Spectrums With Four Blocks
MODEL: CC03

FATIGUE SPECTRUM

[Note: Stress = Input Value * Scale Factor]

Stress Scaling Factors for Block Case: 1. **TRUCK2-VC**

Scale Factor for Stress S3: 0.11647

Stress Scaling Factors for Block Case: 2. **AIR2-VC**

Scale Factor for Stress S3: 0.11647

Stress Scaling Factors for Block Case: 3. **GSFC**

Scale Factor for Stress S3: 0.11647

Stress Scaling Factors for Block Case: 4. **ONORBIT2-VCMAGNET**

Scale Factor for Stress S3: 0.11647

Schedule info. was input manually

Total No. of Blocks in Schedule = 24

Block Number and Case Correspondences

Block Number From - To	Block Case No.
1 - 4	1
5 - 8	2
9 - 20	3
21 - 24	4

Stresses: Tension, bending or pin

Flight VC Spectrums With Four Blocks
MODEL: CC03

FATIGUE SCHEDULE BLOCK INPUT TABLE

BLOCK CASE NO. 1. **TRUCK2-VC**

STEP	MAT	NUMBER OF FATIGUE CYCLES	S3 (t1)	S3 (t2)	S (t1)	S (t2)
1	1	3081.00	28.40	-28.40	28.40	-28.40
2	1	3766.00	20.50	-20.50	20.50	-20.50
3	1	23966.00	14.80	-14.80	14.80	-14.80
4	1	68133.00	10.60	-10.60	10.60	-10.60
5	1	193784.00	7.60	-7.60	7.60	-7.60
6	1	263971.00	5.60	-5.60	5.60	-5.60
7	1	342717.00	4.00	-4.00	4.00	-4.00
8	1	2526038.00	3.30	-3.30	3.30	-3.30

Environmental Crack Growth Check for Sustained Stresses
(Kmax less than Keac): NOT SET

BLOCK CASE NO. 2. **AIR2-VC**

STEP	MAT	NUMBER OF FATIGUE CYCLES	S3 (t1)	S3 (t2)	S (t1)	S (t2)
1	1	26748.00	36.00	-36.00	36.00	-36.00
2	1	892.00	36.00	-36.00	36.00	-36.00
3	1	1230408.00	11.40	-11.40	11.40	-11.40
4	1	45.00	36.00	-36.00	36.00	-36.00
5	1	26748.00	36.00	-36.00	36.00	-36.00

Environmental Crack Growth Check for Sustained Stresses

(Kmax less than Keac): NOT SET

BLOCK CASE NO. 3. **GSFC**

S T E P	M: A: T: L:	NUMBER OF FATIGUE CYCLES	S3 (t1)	S3 (t2)	S (t1)	S (t2)
1:	1:	2.00	-100.00:	100.00:	-100.00:	100.00:
2:	1:	4.00	-90.00:	90.00:	-90.00:	90.00:
3:	1:	8.00	-80.00:	80.00:	-80.00:	80.00:
4:	1:	15.00	-70.00:	70.00:	-70.00:	70.00:
5:	1:	49.00	-60.00:	60.00:	-60.00:	60.00:
6:	1:	81.00	-50.00:	50.00:	-50.00:	50.00:
7:	1:	178.00	-40.00:	40.00:	-40.00:	40.00:
8:	1:	641.00	-30.00:	30.00:	-30.00:	30.00:
9:	1:	3120.00	-20.00:	20.00:	-20.00:	20.00:
10:	1:	3405.00	-10.00:	10.00:	-10.00:	10.00:
11:	1:	5019.00	-7.00:	7.00:	-7.00:	7.00:
12:	1:	28853.00	-5.00:	5.00:	-5.00:	5.00:
13:	1:	91655.00	-3.00:	3.00:	-3.00:	3.00:

Environmental Crack Growth Check for Sustained Stresses
(Kmax less than Keac): NOT SET

BLOCK CASE NO. 4. **ONORBIT2-VCMAGNET**

S T E P	M: A: T: L:	NUMBER OF FATIGUE CYCLES	S3 (t1)	S3 (t2)	S (t1)	S (t2)
1:	1:	34.00	14.10:	8.50:	14.10:	8.50:
2:	1:	34.00	13.90:	8.50:	13.90:	8.50:
3:	1:	60.00	13.70:	8.50:	13.70:	8.50:
4:	1:	179.00	13.50:	8.50:	13.50:	8.50:
5:	1:	117.00	14.10:	8.50:	14.10:	8.50:
6:	1:	414.00	13.90:	8.50:	13.90:	8.50:
7:	1:	2404.00	13.70:	8.50:	13.70:	8.50:
8:	1:	9789.00	13.50:	8.50:	13.50:	8.50:
9:	1:	62675.00	13.40:	8.50:	13.40:	8.50:

Environmental Crack Growth Check for Sustained Stresses
(Kmax less than Keac): NOT SET

Flight VC Spectrums With Four Blocks
MODEL: CC03

FATIGUE SCHEDULE BLOCK STRESS TABLE

S T E P	M: A: T: L:	NUMBER OF FATIGUE CYCLES	S3 (ksi) (t1)	S3 (ksi) (t2)	S (ksi) (t1)	S (ksi) (t2)
1:	1:	3081.00	3.31:	-3.31:	0.00:	0.00:
2:	1:	3766.00	2.39:	-2.39:	0.00:	0.00:
3:	1:	23966.00	1.72:	-1.72:	0.00:	0.00:
4:	1:	68133.00	1.23:	-1.23:	0.00:	0.00:
5:	1:	193784.00	0.89:	-0.89:	0.00:	0.00:

6: 1:	263971.00 :	0.65:	-0.65:	0.00:	0.00:
7: 1:	342717.00 :	0.47:	-0.47:	0.00:	0.00:
8: 1:	2526038.00 :	0.38:	-0.38:	0.00:	0.00:

Environmental Crack Growth Check for Sustained Stresses
(Kmax less than Keac): NOT SET

Flight VC Spectrums With Four Blocks
MODEL: CC03

FATIGUE SCHEDULE BLOCK STRESS TABLE

S T E P	M: A: T: L:	NUMBER OF FATIGUE CYCLES	S3 (ksi) (t1)	S3 (ksi) (t2)	S (ksi) (t1)	S (ksi) (t2)
1:	1:	26748.00 :	4.19:	-4.19:	0.00:	0.00:
2:	1:	892.00 :	4.19:	-4.19:	0.00:	0.00:
3:	1:	1230408.00 :	1.33:	-1.33:	0.00:	0.00:
4:	1:	45.00 :	4.19:	-4.19:	0.00:	0.00:
5:	1:	26748.00 :	4.19:	-4.19:	0.00:	0.00:

Environmental Crack Growth Check for Sustained Stresses
(Kmax less than Keac): NOT SET

Flight VC Spectrums With Four Blocks
MODEL: CC03

FATIGUE SCHEDULE BLOCK STRESS TABLE

S T E P	M: A: T: L:	NUMBER OF FATIGUE CYCLES	S3 (ksi) (t1)	S3 (ksi) (t2)	S (ksi) (t1)	S (ksi) (t2)
1:	1:	2.00 :	-11.65:	11.65:	0.00:	0.00:
2:	1:	4.00 :	-10.48:	10.48:	0.00:	0.00:
3:	1:	8.00 :	-9.32:	9.32:	0.00:	0.00:
4:	1:	15.00 :	-8.15:	8.15:	0.00:	0.00:
5:	1:	49.00 :	-6.99:	6.99:	0.00:	0.00:
6:	1:	81.00 :	-5.82:	5.82:	0.00:	0.00:
7:	1:	178.00 :	-4.66:	4.66:	0.00:	0.00:
8:	1:	641.00 :	-3.49:	3.49:	0.00:	0.00:
9:	1:	3120.00 :	-2.33:	2.33:	0.00:	0.00:
10:	1:	3405.00 :	-1.16:	1.16:	0.00:	0.00:
11:	1:	5019.00 :	-0.82:	0.82:	0.00:	0.00:
12:	1:	28853.00 :	-0.58:	0.58:	0.00:	0.00:
13:	1:	91655.00 :	-0.35:	0.35:	0.00:	0.00:

Environmental Crack Growth Check for Sustained Stresses
(Kmax less than Keac): NOT SET

Flight VC Spectrums With Four Blocks
MODEL: CC03

FATIGUE SCHEDULE BLOCK STRESS TABLE

S T E P	M: A: T: L:	NUMBER OF FATIGUE CYCLES	S3 (ksi) (t1)	S3 (ksi) (t2)	S (ksi) (t1)	S (ksi) (t2)

1:	1:	34.00 :	1.64:	0.99:	0.00:	0.00:
2:	1:	34.00 :	1.62:	0.99:	0.00:	0.00:
3:	1:	60.00 :	1.60:	0.99:	0.00:	0.00:
4:	1:	179.00 :	1.57:	0.99:	0.00:	0.00:
5:	1:	117.00 :	1.64:	0.99:	0.00:	0.00:
6:	1:	414.00 :	1.62:	0.99:	0.00:	0.00:
7:	1:	2404.00 :	1.60:	0.99:	0.00:	0.00:
8:	1:	9789.00 :	1.57:	0.99:	0.00:	0.00:
9:	1:	62675.00 :	1.56:	0.99:	0.00:	0.00:

Environmental Crack Growth Check for Sustained Stresses
(Kmax less than Keac): NOT SET
Flight VC Spectrums With Four Blocks
MODEL: CC03

ANALYSIS RESULTS:

Schedule	Block	Step	Cycles	Crack a	Crack c	Max Kmax(a)	Max Kmax(c)
0	0	0	0.00	0.25000E-01	0.25000E-01	-	-
1	1	-	3425456.00	0.25000E-01	0.25000E-01	0.751	0.593
1	2	-	6850912.00	0.25000E-01	0.25000E-01	0.751	0.593
1	3	-	10276368.00	0.25000E-01	0.25000E-01	0.751	0.593
1	4	-	13701824.00	0.25000E-01	0.25000E-01	0.751	0.593
1	5	-	14986665.00	0.25000E-01	0.25000E-01	0.952	0.751
1	6	-	16271506.00	0.25000E-01	0.25000E-01	0.952	0.751
1	7	-	17556347.00	0.25000E-01	0.25000E-01	0.952	0.751
1	8	-	18841188.00	0.25000E-01	0.25000E-01	0.952	0.751
1	9	-	18974218.00	0.25000E-01	0.25000E-01	2.64	2.09
1	10	-	19107248.00	0.25000E-01	0.25000E-01	2.64	2.09
1	11	-	19240278.00	0.25000E-01	0.25000E-01	2.64	2.09
1	12	-	19373308.00	0.25000E-01	0.25000E-01	2.64	2.09
1	13	-	19506338.00	0.25000E-01	0.25000E-01	2.64	2.09
1	14	-	19639368.00	0.25000E-01	0.25000E-01	2.64	2.09
1	15	-	19772398.00	0.25000E-01	0.25000E-01	2.64	2.09
1	16	-	19905428.00	0.25000E-01	0.25000E-01	2.64	2.09
1	17	-	20038458.00	0.25000E-01	0.25000E-01	2.64	2.09
1	18	-	20171488.00	0.25000E-01	0.25000E-01	2.64	2.09
1	19	-	20304518.00	0.25000E-01	0.25000E-01	2.64	2.09
1	20	-	20437548.00	0.25000E-01	0.25000E-01	2.64	2.09
1	21	-	20513254.00	0.25000E-01	0.25000E-01	0.373	0.294
1	22	-	20588960.00	0.25000E-01	0.25000E-01	0.373	0.294
1	23	-	20664666.00	0.25000E-01	0.25000E-01	0.373	0.294
1	24	-	20740372.00	0.25000E-01	0.25000E-01	0.373	0.294
1	24	9	20740372.00	0.25000E-01	0.25000E-01	0.354	0.280

FINAL RESULTS:
Critical Crack Size has NOT been reached.

at Cycle No. 62675.00
of Load Step No. 9 Description: None
of Block No. 24
of Schedule No. 1

Crack Sizes: a = 0.250001E-01 , c = 0.250001E-01 , a/c = 1.0000
Total Cycles = 20740372.

Sect 2.1.2 INNER CYLINDER

FRACTURE ANALYSIS

2.1.2 Inner Cylinder fracture analysis

The Vacuum case inner cylinder is a monocoque cylinder 44.398 inches outer diameter and about 33.307 inches in height. (Ref. Figure 2.1.2-1) The basic thickness is 0.125 inch except at the two ends where the thickness is 0.259 inch. The ends of the cylinder are welded to the upper and lower conical flange of the Vacuum case. The inner cylinder is made from, 2219-T852 (AMS4144) Rolled ring forging and machined to the final size. Fracture analysis is performed at the parent material and the weld location. The parent metal is classified as low risk and the weld is classified as fracture critical.

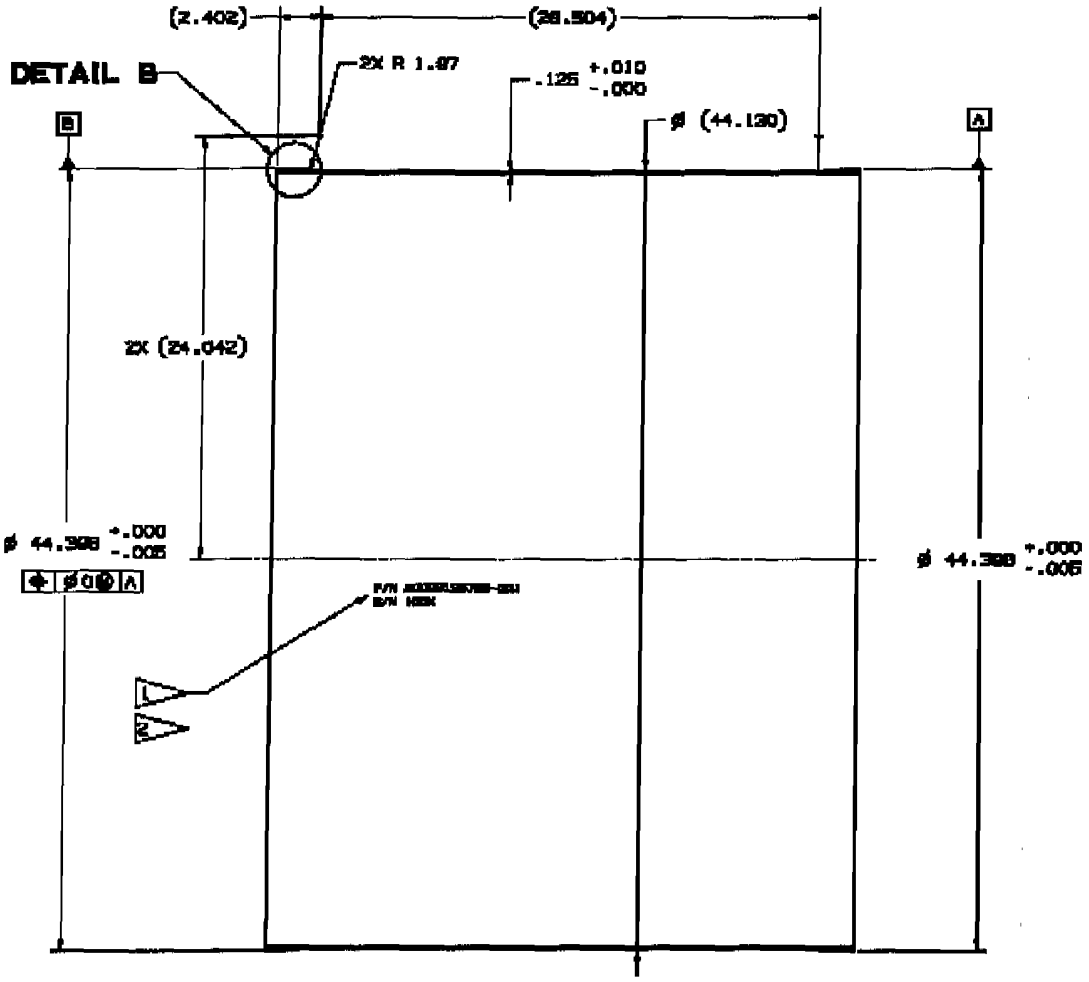

Figure 2.1.2-1 Inner Cylinder

Prepared By	Name/Date C Bala / 3-24-03	LOCKHEED MARTIN Science, Engineering, Analysis, & Test *Mechanical Systems Analysis Department*	File Name IC_fract.doc
Checked By	3/31/03		Drawing No. SDG39135781
Title: Vacuum Case Inner Cylinder Weld Fracture analysis			

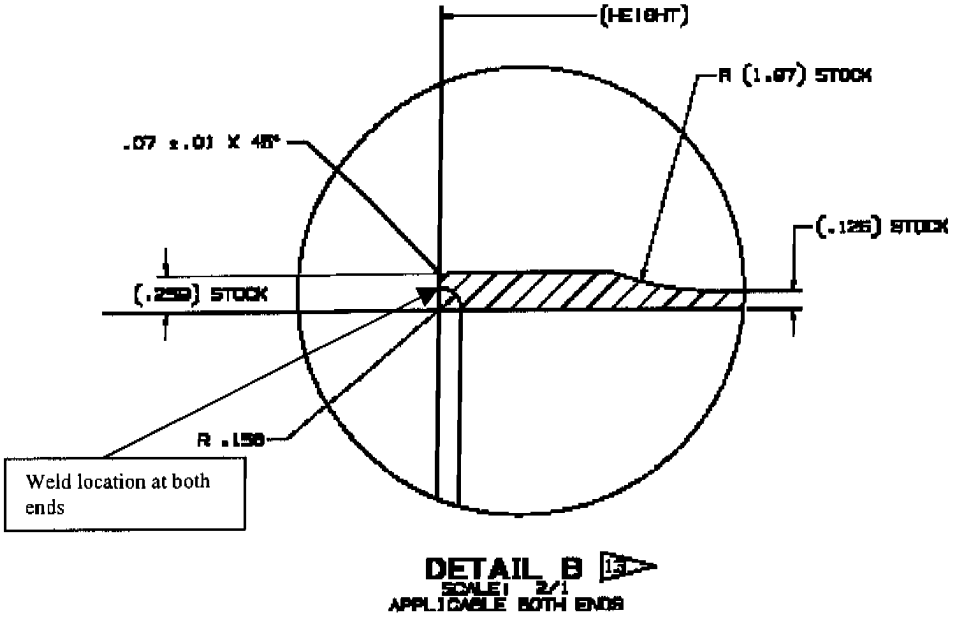

DETAIL B
SCALE: 2/1
APPLICABLE BOTH ENDS

SC05

internal or external crack

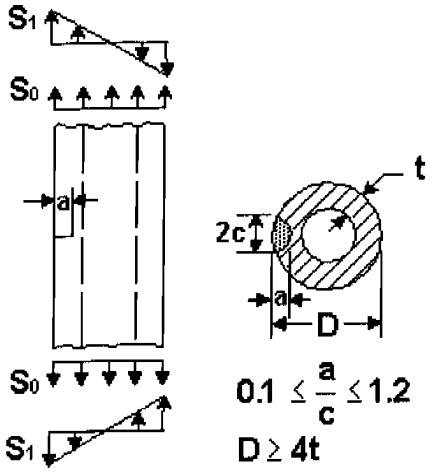

$$0.1 \le \frac{a}{c} \le 1.2$$

$$D \ge 4t$$

Inner Cylinder STA Spectrum

Material:	2219-T852 weld
NASA/FLAGRO Crack case type:	SC05

Section Properties:

Plate thickness	t = 0.125 in.
Outer diameter	D = 44.398 in.
Poisson's ratio	ν= 0.33 in.

Prepared By	Name/Date C Bala / 3-24-03	LOCKHEED MARTIN Science, Engineering, Analysis, & Test *Mechanical Systems Analysis Department*	File Name IC_fract.doc
Checked By	V C.A 3/3/03		Drawing No. SDG39135781
Title: Vacuum Case Inner Cylinder Weld Fracture analysis			

Crack Properties:

a = 0.025 in.(Low risk crack size)
c = 0.025 in.
a/c = 1.0

Loads: Max. tension stress in weld — S0= 24842 psi (ref. Sect.1.1.2B, page 5)

The max. tensile stress in the inner cylinder is 24842 ksi (Load case R1045, Elem. ID 202939, model 6-02a loads). The Flagro analysis for the STA VC uses the truck, Air, sine sweep test, Acoustic test , On-Orbit and Launch/Landing case spectrums. The material data used is for 2219-T852 forging, from the NASGRO library except the Ftu and Fty are changed as per MIL-HDBK-5H, table 3.2.7.0(c), 2.0 to 4.0 in thick, ST values.
The truck, air, sine sweep test, Acoustic test and on orbit spectrums are run for 1 mission with a scatter factor of 4 and the Launch/Landing spectrum is run for 3 missions with a scatter factor of 4. Low risk crack size a = 0.025 in. and c = 0.025 in. is used. (Ref. JSC22267A, table 2). The results of the analysis show that the crack growth is stable.

```
                    FATIGUE CRACK GROWTH ANALYSIS
                    -----------------------------
                 DATE: 24-Mar-03   TIME: 14:45:56
                 (NASGRO Version 4.02, September 2002.)
          U.S. customary units [inches, ksi, ksi sqrt(in)]

PROBLEM TITLE
-------------
Inner Cylinder STA Spectrum

Crack Growth Model: Non Interaction
Ratio of growth increment to current crk size=  0.0050
Equation/Table    : NASGRO Equation

GEOMETRY
--------
MODEL: SC05-Surf. crk (2D) on cylinder circ. plane at OD.

Crack Type = INTERNAL

Cylinder Thickness, t =    0.1250
Outer Diameter, D     =   44.3980
Poissons Ratio        =    0.3300

FLAW SIZE: (User specified)

a  (init.) =  0.2500E-01
c  (init.) =  0.2500E-01
a/c (init.) =   1.000

MATERIAL
--------

MATL 1:   1000-9000 SERIES AL [**Manual data input**]
          2000 series

Material Header Info.:

Material  1 Data ID: M2IE23AD1
Alloy Description :   2219-T852 Al

Alloy Cond/HT :    Forged; L-T & T-L; HHA; Room temp
Product Form :

Environment :

Specimen Type :
Specimen Orientation :
```

Specimen Thickness :
Specimen Width :
Specimen Test Frequency :
Data Reference :

Material Properties:

Matl No.	UTS	YS	K1e	K1c	Ak	Bk	Thk	Kc	Keac
1	**60.0**	**46.0**	35.0	25.0	1.00	1.00	0.125	49.3	

Matl No.	Crack Growth Eqn Constants C	n	p	q	DK1	Cth+	Alpha	Smax/SIGo
1	0.900D-08	3.000	0.50	1.00	0.75	2.50	2.00	0.30

|Ftu and Fty changed as per MIL-HDBK-5H, table 3.2.7.0 (c), 2.0 to 4.0 in., ST values)

Small crack threshold parameters:
a0 = 0.00150
Limit of ratio DKth(S)/DKth(L) = 0.20

Cth+ = 0, Cth- = 0 are used at start only

Inner Cylinder STA Spectrum
MODEL: SC05

FATIGUE SPECTRUM

Inner Cylinder STA spectrum

[Note: Stress = Input Value * Scale Factor]

Stress Scaling Factors for Block Case: 1 **TRUCK1-STA**

Scale Factor for Stress S0: 0.24842
Scale Factor for Stress S1: 0.0000

Stress Scaling Factors for Block Case: 2 **AIR1-STA**

Scale Factor for Stress S0: 0.24842
Scale Factor for Stress S1: 0.0000

Stress Scaling Factors for Block Case: 3 **SINE-STA**

Scale Factor for Stress S0: 0.24842
Scale Factor for Stress S1: 0.0000

Stress Scaling Factors for Block Case: 4 **ACOUSTIC-STA**

Scale Factor for Stress S0: 0.24842
Scale Factor for Stress S1: 0.0000

Stress Scaling Factors for Block Case: 5 **GSFC**

Scale Factor for Stress S0: 0.24842
Scale Factor for Stress S1: 0.0000

Stress Scaling Factors for Block Case: 6 **ONORBIT1-STA**

Scale Factor for Stress S0: 0.24842
Scale Factor for Stress S1: 0.0000

Schedule info. was input manually

Total No. of Blocks in Schedule = 32

Block Number and Case Correspondences

Block Number From	To	Block Case No.
1	4	1
5	8	2

9	-	12	3
13	-	16	4
17	-	28	5
29	-	32	6

Stresses: Tension, bending or pin

Inner Cylinder STA Spectrum
MODEL: SC05

FATIGUE SCHEDULE BLOCK INPUT TABLE

Inner Cylinder STA spectrum

BLOCK CASE NO. 1

S T E P	M: A: T: L:	NUMBER OF FATIGUE CYCLES	S0 (t1)	S0 (t2)	S1 (t1)	S1 (t2)
1:	1:	1444.00	28.40:	-28.40:	28.40:	-28.40:
2:	1:	1765.00	20.50:	-20.50:	20.50:	-20.50:
3:	1:	11234.00	14.80:	-14.80:	14.80:	-14.80:
4:	1:	31937.00	10.60:	-10.60:	10.60:	-10.60:
5:	1:	90836.00	7.60:	-7.60:	7.60:	-7.60:
6:	1:	123736.00	5.60:	-5.60:	5.60:	-5.60:
7:	1:	160648.00	4.00:	-4.00:	4.00:	-4.00:
8:	1:	1184080.00	3.30:	-3.30:	3.30:	-3.30:

Environmental Crack Growth Check for Sustained Stresses
(Kmax less than Keac): NOT SET

BLOCK CASE NO. 2

S T E P	M: A: T: L:	NUMBER OF FATIGUE CYCLES	S0 (t1)	S0 (t2)	S1 (t1)	S1 (t2)
1:	1:	17832.00	36.00:	-36.00:	36.00:	-36.00:
2:	1:	594.00	36.00:	-36.00:	36.00:	-36.00:
3:	1:	1069920.00	11.00:	-11.00:	11.40:	-11.40:
4:	1:	30.00	36.00:	-36.00:	36.00:	-36.00:
5:	1:	17832.00	36.00:	-36.00:	36.00:	-36.00:

Environmental Crack Growth Check for Sustained Stresses
(Kmax less than Keac): NOT SET

BLOCK CASE NO. 3

S T E P	M: A: T: L:	NUMBER OF FATIGUE CYCLES	S0 (t1)	S0 (t2)	S1 (t1)	S1 (t2)
1:	1:	121.00	104.50:	-104.50:	104.50:	-104.50:
2:	1:	121.00	82.20:	-82.20:	82.20:	-82.20:
3:	1:	121.00	107.20:	-107.20:	107.20:	-107.20:

Environmental Crack Growth Check for Sustained Stresses
(Kmax less than Keac): NOT SET

BLOCK CASE NO. 4

S T E P	M: A: T: L:	NUMBER OF FATIGUE CYCLES	S0 (t1)	S0 (t2)	S1 (t1)	S1 (t2)
1:	1:	9000.00	10.00:	-10.00:	10.00:	-10.00:

Environmental Crack Growth Check for Sustained Stresses
(Kmax less than Keac): NOT SET

BLOCK CASE NO. 5

S T E P	M: A: T: L:	NUMBER OF FATIGUE CYCLES	S0 (t1)	S0 (t2)	S1 (t1)	S1 (t2)
1:	1:	2.00	-100.00:	100.00:	-100.00:	100.00:
2:	1:	4.00	-90.00:	90.00:	-90.00:	90.00:
3:	1:	8.00	-80.00:	80.00:	-80.00:	80.00:
4:	1:	15.00	-70.00:	70.00:	-70.00:	70.00:
5:	1:	49.00	-60.00:	60.00:	-60.00:	60.00:
6:	1:	81.00	-50.00:	50.00:	-50.00:	50.00:
7:	1:	178.00	-40.00:	40.00:	-40.00:	40.00:
8:	1:	641.00	-30.00:	30.00:	-30.00:	30.00:
9:	1:	3120.00	-20.00:	20.00:	-20.00:	20.00:
10:	1:	3405.00	-10.00:	10.00:	-10.00:	10.00:
11:	1:	5019.00	-7.00:	7.00:	-7.00:	7.00:
12:	1:	28853.00	-5.00:	5.00:	-5.00:	5.00:
13:	1:	91655.00	-3.00:	3.00:	-3.00:	3.00:

Environmental Crack Growth Check for Sustained Stresses
(Kmax less than Keac): NOT SET

BLOCK CASE NO. 6

S T E P	M: A: T: L:	NUMBER OF FATIGUE CYCLES	S0 (t1)	S0 (t2)	S1 (t1)	S1 (t2)
1:	1:	34.00	1.02:	-1.02:	1.02:	-1.02:
2:	1:	34.00	0.81:	-0.81:	0.81:	-0.81:
3:	1:	60.00	0.61:	-0.61:	0.61:	-0.61:
4:	1:	179.00	0.41:	-0.41:	0.41:	-0.41:
5:	1:	117.00	1.02:	-1.02:	1.02:	-1.02:
6:	1:	414.00	0.81:	-0.81:	0.81:	-0.81:
7:	1:	2404.00	0.61:	-0.61:	0.61:	-0.61:
8:	1:	9789.00	0.41:	-0.41:	0.41:	-0.41:
9:	1:	62675.00	0.20:	-0.20:	0.20:	-0.20:

Environmental Crack Growth Check for Sustained Stresses
(Kmax less than Keac): NOT SET

Inner Cylinder STA Spectrum
MODEL: SC05

FATIGUE SCHEDULE BLOCK STRESS TABLE

Inner Cylinder STA spectrum

S T E P	M: A: T: L:	NUMBER OF FATIGUE CYCLES	S0 (ksi) (t1)	S0 (ksi) (t2)	S1 (ksi) (t1)	S1 (ksi) (t2)
1:	1:	1444.00	7.06:	-7.06:	0.00:	0.00:
2:	1:	1765.00	5.09:	-5.09:	0.00:	0.00:
3:	1:	11234.00	3.68:	-3.68:	0.00:	0.00:
4:	1:	31937.00	2.63:	-2.63:	0.00:	0.00:
5:	1:	90836.00	1.89:	-1.89:	0.00:	0.00:

6: 1:	123736.00 :	1.39:	-1.39:	0.00:	0.00:
7: 1:	160648.00 :	0.99:	-0.99:	0.00:	0.00:
8: 1:	1184080.00 :	0.82:	-0.82:	0.00:	0.00:

Environmental Crack Growth Check for Sustained Stresses
(Kmax less than Keac): NOT SET

Inner Cylinder STA Spectrum
MODEL: SC05

FATIGUE SCHEDULE BLOCK STRESS TABLE
Inner Cylinder STA spectrum

S T E P	M: A: T: L:	NUMBER OF FATIGUE CYCLES	S0 (ksi) (t1)	S0 (ksi) (t2)	S1 (ksi) (t1)	S1 (ksi) (t2)
1:	1:	17832.00 :	8.94:	-8.94:	0.00:	0.00:
2:	1:	594.00 :	8.94:	-8.94:	0.00:	0.00:
3:	1:	1069920.00 :	2.73:	-2.73:	0.00:	0.00:
4:	1:	30.00 :	8.94:	-8.94:	0.00:	0.00:
5:	1:	17832.00 :	8.94:	-8.94:	0.00:	0.00:

Environmental Crack Growth Check for Sustained Stresses
(Kmax less than Keac): NOT SET

Inner Cylinder STA Spectrum
MODEL: SC05

FATIGUE SCHEDULE BLOCK STRESS TABLE
Inner Cylinder STA spectrum

S T E P	M: A: T: L:	NUMBER OF FATIGUE CYCLES	S0 (ksi) (t1)	S0 (ksi) (t2)	S1 (ksi) (t1)	S1 (ksi) (t2)
1:	1:	121.00 :	25.96:	-25.96:	0.00:	0.00:
2:	1:	121.00 :	20.42:	-20.42:	0.00:	0.00:
3:	1:	121.00 :	26.63:	-26.63:	0.00:	0.00:

Environmental Crack Growth Check for Sustained Stresses
(Kmax less than Keac): NOT SET

Inner Cylinder STA Spectrum
MODEL: SC05

FATIGUE SCHEDULE BLOCK STRESS TABLE
Inner Cylinder STA spectrum

S T E P	M: A: T: L:	NUMBER OF FATIGUE CYCLES	S0 (ksi) (t1)	S0 (ksi) (t2)	S1 (ksi) (t1)	S1 (ksi) (t2)
1:	1:	9000.00 :	2.48:	-2.48:	0.00:	0.00:

Environmental Crack Growth Check for Sustained Stresses
(Kmax less than Keac): NOT SET

Inner Cylinder STA Spectrum
MODEL: SC05

FATIGUE SCHEDULE BLOCK STRESS TABLE
Inner Cylinder STA spectrum

S T E P	M: A: T: L:	NUMBER OF FATIGUE CYCLES	S0 (ksi) (t1)	S0 (ksi) (t2)	S1 (ksi) (t1)	S1 (ksi) (t2)

1:	1:	2.00	-24.84:	24.84:	0.00:	0.00:
2:	1:	4.00	-22.36:	22.36:	0.00:	0.00:
3:	1:	8.00	-19.87:	19.87:	0.00:	0.00:
4:	1:	15.00	-17.39:	17.39:	0.00:	0.00:
5:	1:	49.00	-14.91:	14.91:	0.00:	0.00:
6:	1:	81.00	-12.42:	12.42:	0.00:	0.00:
7:	1:	178.00	-9.94:	9.94:	0.00:	0.00:
8:	1:	641.00	-7.45:	7.45:	0.00:	0.00:
9:	1:	3120.00	-4.97:	4.97:	0.00:	0.00:
10:	1:	3405.00	-2.48:	2.48:	0.00:	0.00:
11:	1:	5019.00	-1.74:	1.74:	0.00:	0.00:
12:	1:	28853.00	-1.24:	1.24:	0.00:	0.00:
13:	1:	91655.00	-0.75:	0.75:	0.00:	0.00:

Environmental Crack Growth Check for Sustained Stresses

(Kmax less than Keac): NOT SET

Inner Cylinder STA Spectrum
MODEL: SC05

FATIGUE SCHEDULE BLOCK STRESS TABLE

Inner Cylinder STA spectrum

S	M:	NUMBER	S0		S1	
T	A:	OF				
E	T:	FATIGUE	(ksi)		(ksi)	
P	L:	CYCLES	(t1)	(t2)	(t1)	(t2)
1:	1:	34.00	0.25:	-0.25:	0.00:	0.00:
2:	1:	34.00	0.20:	-0.20:	0.00:	0.00:
3:	1:	60.00	0.15:	-0.15:	0.00:	0.00:
4:	1:	179.00	0.10:	-0.10:	0.00:	0.00:
5:	1:	117.00	0.25:	-0.25:	0.00:	0.00:
6:	1:	414.00	0.20:	-0.20:	0.00:	0.00:
7:	1:	2404.00	0.15:	-0.15:	0.00:	0.00:
8:	1:	9789.00	0.10:	-0.10:	0.00:	0.00:
9:	1:	62675.00	0.05:	-0.05:	0.00:	0.00:

Environmental Crack Growth Check for Sustained Stresses
(Kmax less than Keac): NOT SET

Inner Cylinder STA Spectrum
MODEL: SC05

ANALYSIS RESULTS:

Schedule	Block	Step	Cycles	Crack a	Crack c	Max Kmax(a)	Max Kmax(c)
0	0	0	0.00	0.25000E-01	0.25000E-01	-	-
1	4	-	6422720.00	0.25026E-01	0.25027E-01	1.30	1.46
1	8	-	10847552.00	0.26851E-01	0.26913E-01	1.71	1.91
1	12	-	10849004.00	0.27475E-01	0.27556E-01	5.16	5.78
1	16	-	10885004.00	0.27475E-01	0.27556E-01	0.481	0.539
1	20	-	11417124.00	0.27562E-01	0.27650E-01	4.81	5.39
1	24	-	11949244.00	0.27650E-01	0.27744E-01	4.82	5.40
1	28	-	12481364.00	0.27739E-01	0.27840E-01	4.83	5.41
1	32	-	12784188.00	0.27739E-01	0.27840E-01	0.493E-01	0.552E-01
1	32	9	12784189.00	0.27739E-01	0.27840E-01	0.966E-02	0.108E-01

FINAL RESULTS:
Critical Crack Size has NOT been reached.

at Cycle No. 62675.00
of Load Step No. 9 Description: None
of Block No. 32
of Schedule No. 1

Crack Sizes: a = 0.277392E-01 , c = 0.278398E-01 , a/c = 0.9964
Total Cycles = 12784188.

Prepared By	Name/Date C. Bala / 3-24-03	LOCKHEED MARTIN	File Name IC_fracl.doc
Checked By	3/31/03	Science, Engineering, Analysis, & Test *Mechanical Systems Analysis Department*	Drawing No. SDG39135781
Title: Vacuum Case Inner Cylinder Weld Fracture analysis			

Inner Cylinder Flight Spectrum

Material:	2219-T852 weld
NASA/FLAGRO Crack case type:	SC05

Section Properties:

Plate thickness	t = 0.125 in.
Outer diameter	D = 44.398 in.
Poisson's ratio	ν= 0.33 in.

Crack Properties:

	a = 0.025 in.(Low risk crack size)
	c = 0.025 in.
	a/c = 1.0
Loads: Max. tension stress in weld	S0= 24842 psi (ref. Sect.1.1.2B, page 5)

The max. tensile stress in the inner cylinder is 24842 ksi (Load case R1045, Elem. ID 202939, model 6-02a loads). The Flagro analysis for the flight VC uses the truck, Air, On-Orbit and Launch/Landing case spectrums. The material data used is for 2219-T852 forging. from the NASGRO library except the Ftu and Fty are changed as per MIL-HDBK-5H, table 3.2.7.0(c), 2.0 to 4.0 in thick, ST values.
The truck, air, and on orbit spectrums are run for 1 mission with a scatter factor of 4 and the Launch/Landing spectrum is run for 3 missions with a scatter factor of 4. Low risk crack size a = 0.025 in. and c = 0.025 in. is used. (Ref. JSC22267A, table 2). The results of the analysis show that the crack growth is stable.

```
                FATIGUE CRACK GROWTH ANALYSIS
                -----------------------------
               DATE: 24-Mar-03   TIME: 15:34:37
               (NASGRO Version 4.02, September 2002.)
       U.S. customary units (inches, ksi, ksi sqrt(in))

PROBLEM TITLE
-------------
Inner Cylinder Flight Spectrum

Crack Growth Model: Non Interaction
Ratio of growth increment to current crk size=  0.0050
Equation/Table    : NASGRO Equation

GEOMETRY
--------
MODEL: SC05-Surf. crk (2D) on cylinder circ. plane at OD.

Crack Type = INTERNAL

Cylinder Thickness, t =    0.1250
Outer Diameter, D     =   44.3980
Poissons Ratio        =    0.3300

FLAW SIZE: (User specified)

a  (init.) =  0.2500E-01
c  (init.) =  0.2500E-01
a/c (init.) =   1.000
```

MATERIAL

MATL 1: 1000-9000 SERIES AL [**Manual data input**]
2000 series

Material Header Info.:

Material 1 Data ID: M2IE23AD1
Alloy Description : 2219-T852 Al

Alloy Cond/HT : Forged; L-T & T-L; HHA; Room temp
Product Form :

Environment :

Specimen Type :
Specimen Orientation :
Specimen Thickness :
Specimen Width :
Specimen Test Frequency :
Data Reference :

Material Properties:

Matl: No.	UTS	YS	K1e	K1c	Ak	Bk	Thk	Kc	Keac
1	**60.0**	**46.0**	35.0	25.0	1.00	1.00	0.125	49.3	

Matl: No.	Crack Growth Eqn Constants C	n	p	q	DK1	Cth+	Alpha:Smax/:SIGo	
1	0.900D-08	3.000	0.50	1.00	0.75	2.50	2.00	0.30

[Ftu and Fty changed as per MIL-HDBK-5H, table 3.2.7.0 ©, 2.0 to 4.0 thick, ST values)

Small crack threshold parameters:
a0 = 0.00150
Limit of ratio DKth(S)/DKth(L) = 0.20

Cth+ = 0, Cth- = 0 are used at start only
Inner Cylinder Flight Spectrum
MODEL: SC05

FATIGUE SPECTRUM

Inner Cylinder Flight spectrum

[Note: Stress = Input Value * Scale Factor]

Stress Scaling Factors for Block Case: 1 **TRUCK2-VC**

Scale Factor for Stress S0: 0.24842
Scale Factor for Stress S1: 0.0000

Stress Scaling Factors for Block Case: 2 **AIR2-VC**

Scale Factor for Stress S0: 0.24842
Scale Factor for Stress S1: 0.0000

Stress Scaling Factors for Block Case: 3 **GSFC**

Scale Factor for Stress S0: 0.24842
Scale Factor for Stress S1: 0.0000

Stress Scaling Factors for Block Case: 4 **ONORBIT2-VCMAGNET**

Scale Factor for Stress S0: 0.24842
Scale Factor for Stress S1: 0.0000

Schedule info. was input manually

Total No. of Blocks in Schedule = 24

Block Number and Case Correspondences

Block Number From	-	To	Block Case No.
1	-	4	1
5	-	8	2
9	-	20	3
21	-	24	4

Stresses: Tension, bending or pin

Inner Cylinder Flight Spectrum
MODEL: SC05

FATIGUE SCHEDULE BLOCK INPUT TABLE

Inner Cylinder Flight spectrum

BLOCK CASE NO. 1

S T E P	M: A: T: L:	NUMBER OF FATIGUE CYCLES	S0 (t1)	S0 (t2)	S1 (t1)	S1 (t2)
1:	1:	3081.00	28.40:	-28.40:	28.40:	-28.40:
2:	1:	3766.00	20.50:	-20.50:	20.50:	-20.50:
3:	1:	23966.00	14.80:	-14.80:	14.80:	-14.80:
4:	1:	68133.00	10.60:	-10.60:	10.60:	-10.60:
5:	1:	193784.00	7.60:	-7.60:	7.60:	-7.60:
6:	1:	263971.00	5.60:	-5.60:	5.60:	-5.60:
7:	1:	342717.00	4.00:	-4.00:	4.00:	-4.00:
8:	1:	2526038.00	3.30:	-3.30:	3.30:	-3.30:

Environmental Crack Growth Check for Sustained Stresses
(Kmax less than Keac): NOT SET

BLOCK CASE NO. 2

S T E P	M: A: T: L:	NUMBER OF FATIGUE CYCLES	S0 (t1)	S0 (t2)	S1 (t1)	S1 (t2)
1:	1:	26748.00	36.00:	-36.00:	36.00:	-36.00:
2:	1:	892.00	36.00:	-36.00:	36.00:	-36.00:
3:	1:	1230408.00	11.00:	-11.00:	11.40:	-11.40:
4:	1:	45.00	36.00:	-36.00:	36.00:	-36.00:
5:	1:	26748.00	36.00:	-36.00:	36.00:	-36.00:

Environmental Crack Growth Check for Sustained Stresses
(Kmax less than Keac): NOT SET

BLOCK CASE NO. 3

S T E P	M: A: T: L:	NUMBER OF FATIGUE CYCLES	S0 (t1)	S0 (t2)	S1 (t1)	S1 (t2)
1:	1:	2.00	-100.00:	100.00:	-100.00:	100.00:
2:	1:	4.00	-90.00:	90.00:	-90.00:	90.00:
3:	1:	8.00	-80.00:	80.00:	-80.00:	80.00:
4:	1:	15.00	-70.00:	70.00:	-70.00:	70.00:
5:	1:	49.00	-60.00:	60.00:	-60.00:	60.00:
6:	1:	81.00	-50.00:	50.00:	-50.00:	50.00:
7:	1:	178.00	-40.00:	40.00:	-40.00:	40.00:
8:	1:	641.00	-30.00:	30.00:	-30.00:	30.00:
9:	1:	3120.00	-20.00:	20.00:	-20.00:	20.00:
10:	1:	3405.00	-10.00:	10.00:	-10.00:	10.00:
11:	1:	5019.00	-7.00:	7.00:	-7.00:	7.00:
12:	1:	28853.00	-5.00:	5.00:	-5.00:	5.00:
13:	1:	91655.00	-3.00:	3.00:	-3.00:	3.00:

Environmental Crack Growth Check for Sustained Stresses
(Kmax less than Keac): NOT SET

BLOCK CASE NO. 4

S T E P	M: A: T: L:	NUMBER OF FATIGUE CYCLES	S0 (t1)	S0 (t2)	S1 (t1)	S1 (t2)
1:	1:	34.00	14.10:	8.50:	14.10:	8.50:
2:	1:	34.00	13.90:	8.50:	13.90:	8.50:
3:	1:	60.00	13.70:	8.50:	13.70:	8.50:
4:	1:	179.00	13.50:	8.50:	13.50:	8.50:
5:	1:	117.00	14.10:	8.50:	14.10:	8.50:
6:	1:	414.00	13.90:	8.50:	13.90:	8.50:
7:	1:	2404.00	13.70:	8.50:	13.70:	8.50:
8:	1:	9789.00	13.50:	8.50:	13.50:	8.50:
9:	1:	62675.00	13.40:	8.50:	13.40:	8.50:

Environmental Crack Growth Check for Sustained Stresses
(Kmax less than Keac): NOT SET

Inner Cylinder Flight Spectrum
MODEL: SC05

FATIGUE SCHEDULE BLOCK STRESS TABLE

Inner Cylinder Flight spectrum

S T E P	M: A: T: L:	NUMBER OF FATIGUE CYCLES	S0 (ksi) (t1)	S0 (ksi) (t2)	S1 (ksi) (t1)	S1 (ksi) (t2)
1:	1:	3081.00	7.06:	-7.06:	0.00:	0.00:
2:	1:	3766.00	5.09:	-5.09:	0.00:	0.00:
3:	1:	23966.00	3.68:	-3.68:	0.00:	0.00:
4:	1:	68133.00	2.63:	-2.63:	0.00:	0.00:
5:	1:	193784.00	1.89:	-1.89:	0.00:	0.00:
6:	1:	263971.00	1.39:	-1.39:	0.00:	0.00:
7:	1:	342717.00	0.99:	-0.99:	0.00:	0.00:
8:	1:	2526038.00	0.82:	-0.82:	0.00:	0.00:

Environmental Crack Growth Check for Sustained Stresses
(Kmax less than Keac): NOT SET

Inner Cylinder Flight Spectrum
MODEL: SC05

FATIGUE SCHEDULE BLOCK STRESS TABLE

Inner Cylinder Flight spectrum

S T E P	M: A: T: L:	NUMBER OF FATIGUE CYCLES	S0 (ksi) (t1)	S0 (ksi) (t2)	S1 (ksi) (t1)	S1 (ksi) (t2)
1:	1:	26748.00	8.94:	-8.94:	0.00:	0.00:
2:	1:	892.00	8.94:	-8.94:	0.00:	0.00:
3:	1:	1230408.00	2.73:	-2.73:	0.00:	0.00:
4:	1:	45.00	8.94:	-8.94:	0.00:	0.00:
5:	1:	26748.00	8.94:	-8.94:	0.00:	0.00:

Environmental Crack Growth Check for Sustained Stresses
(Kmax less than Keac): NOT SET

Inner Cylinder Flight Spectrum
MODEL: SC05

FATIGUE SCHEDULE BLOCK STRESS TABLE

Inner Cylinder Flight spectrum

Prepared By	Name/Date C. Bala / 3-24-03	LOCKHEED MARTIN Science, Engineering, Analysis, & Test *Mechanical Systems Analysis Department*	File Name IC_fract.doc
Checked By	3/31/03		Drawing No. SDG39135781
Title: Vacuum Case Inner Cylinder Weld Fracture analysis			

S T E P	M: A: T: L:	NUMBER OF FATIGUE CYCLES	S0 (ksi) (t1)	S0 (ksi) (t2)	S1 (ksi) (t1)	S1 (ksi) (t2)
1:	1:	2.00	-24.84:	24.84:	0.00:	0.00:
2:	1:	4.00	-22.36:	22.36:	0.00:	0.00:
3:	1:	8.00	-19.87:	19.87:	0.00:	0.00:
4:	1:	15.00	-17.39:	17.39:	0.00:	0.00:
5:	1:	49.00	-14.91:	14.91:	0.00:	0.00:
6:	1:	81.00	-12.42:	12.42:	0.00:	0.00:
7:	1:	178.00	-9.94:	9.94:	0.00:	0.00:
8:	1:	641.00	-7.45:	7.45:	0.00:	0.00:
9:	1:	3120.00	-4.97:	4.97:	0.00:	0.00:
10:	1:	3405.00	-2.48:	2.48:	0.00:	0.00:
11:	1:	5019.00	-1.74:	1.74:	0.00:	0.00:
12:	1:	28853.00	-1.24:	1.24:	0.00:	0.00:
13:	1:	91655.00	-0.75:	0.75:	0.00:	0.00:

Environmental Crack Growth Check for Sustained Stresses
(Kmax less than Keac): NOT SET

Inner Cylinder Flight Spectrum
MODEL: SC05
FATIGUE SCHEDULE BLOCK STRESS TABLE

Inner Cylinder Flight spectrum

S T E P	M: A: T: L:	NUMBER OF FATIGUE CYCLES	S0 (ksi) (t1)	S0 (ksi) (t2)	S1 (ksi) (t1)	S1 (ksi) (t2)
1:	1:	34.00	3.50:	2.11:	0.00:	0.00:
2:	1:	34.00	3.45:	2.11:	0.00:	0.00:
3:	1:	60.00	3.40:	2.11:	0.00:	0.00:
4:	1:	179.00	3.35:	2.11:	0.00:	0.00:
5:	1:	117.00	3.50:	2.11:	0.00:	0.00:
6:	1:	414.00	3.45:	2.11:	0.00:	0.00:
7:	1:	2404.00	3.40:	2.11:	0.00:	0.00:
8:	1:	9789.00	3.35:	2.11:	0.00:	0.00:
9:	1:	62675.00	3.33:	2.11:	0.00:	0.00:

Environmental Crack Growth Check for Sustained Stresses
(Kmax less than Keac): NOT SET

Inner Cylinder Flight Spectrum
MODEL: SC05

ANALYSIS RESULTS:

Schedule	Block	Step	Cycles	Crack a	Crack c	Max Kmax(a)	Max Kmax(c)
0	0	0	0.00	0.25000E-01	0.25000E-01	-	-
1	4	-	13701824.00	0.25055E-01	0.25058E-01	1.30	1.46
1	8	-	18841188.00	0.27902E-01	0.27999E-01	1.74	1.95
1	12	-	19373308.00	0.27995E-01	0.28097E-01	4.85	5.44
1	16	-	19905428.00	0.28089E-01	0.28197E-01	4.86	5.45
1	20	-	20437548.00	0.28184E-01	0.28297E-01	4.87	5.46
1	24	-	20740372.00	0.28184E-01	0.28297E-01	0.687	0.770
1	24	9	20740372.00	0.28184E-01	0.28297E-01	0.653	0.732

FINAL RESULTS:
Critical Crack Size has NOT been reached.

at Cycle No. 62675.00
of Load Step No. 9 Description: None
of Block No. 24
of Schedule No. 1

Crack Sizes: a = 0.281844E-01 , c = 0.282967E-01 , a/c = 0.99
Total Cycles = 20740372

Prepared By	Name/Date C. Bala / 3-24-03	**LOCKHEED MARTIN** Science, Engineering, Analysis, & Test *Mechanical Systems Analysis Department*	File Name IC_fract.doc
Checked By	3/31/03		Drawing No. SDG39135781
Title: Vacuum Case Inner Cylinder Weld Fracture analysis			

Inner Cylinder Weld STA Spectrum

Material:	2219-T852 weld
NASA/FLAGRO Crack case type:	SC05

Section Properties:

Plate thickness	t = 0.259 in.
Outer diameter	D = 44.398 in.
Poisson's ratio	ν= 0.33 in.

Crack Properties:

a = 0.075 in.(dye penetrant inspection)
c = 0.075 in.
a/c = 1.0

Loads:

Max. tension stress in weld	S0= 22769 psi (ref. Sect.1.1.2, page 9)

The inner cylinder has closeout welds at the top and bottom of the cylinder adjacent to the conical flanges. The max. tensile stress in the weld is 22769 ksi (Load case R1045, Elem. ID 30224, model 6-02a loads). The Flagro analysis for the STA VC uses the truck, Air, sine sweep test, Acoustic test , On-Orbit and Launch/Landing case spectrums. The material data used is for 2219-T852 forging, from the NASGRO library except the Ftu and Fty are changed as per the e-mail from Dan Rybicki dated March 19, 03 for Ftu, and RITF weld test report dated 5/22/02 for Fty.

The truck, air, sine sweep test, Acoustic test and on orbit spectrums are run for 1 mission with a scatter factor of 4 and the Launch/Landing spectrum is run for 3 missions with a scatter factor of 4. Dye penetrant inspection is used to inspect the weld, and the standard dye penetrant crack size a = 0.075 in. and c = 0.075 in. is used. (Ref. JSC22267A, table 2). The results of the analysis show that the crack growth is stable.

```
                FATIGUE CRACK GROWTH ANALYSIS
                -----------------------------
               DATE: 24-Mar-03   TIME: 12:52:55
               (NASGRO Version 4.02, September 2002.)
        U.S. customary units [inches, ksi, ksi sqrt(in)]

PROBLEM TITLE
-------------
Inner Cylinder Weld STA Spectrum

Crack Growth Model: Non Interaction
Ratio of growth increment to current crk size=  0.0050
Equation/Table    : NASGRO Equation

GEOMETRY
--------
MODEL: SC05-Surf. crk (2D) on cylinder circ. plane at OD.

Crack Type = INTERNAL


Cylinder Thickness, t =    0.2590
Outer Diameter, D     =   44.3980
```

Poissons Ratio = 0.3300

FLAW SIZE: (User specified)

a (init.) = 0.7500E-01
c (init.) = 0.7500E-01
a/c (init.) = 1.000

MATERIAL

MATL 1: 1000-9000 SERIES AL [**Manual data input**]
2000 series

Material Header Info.:

Material 1 Data ID: M2IE23AD1
Alloy Description : 2219-T852 Al

Alloy Cond/HT : Forged; L-T & T-L; HHA; Room temp
Product Form :

Environment :

Specimen Type :
Specimen Orientation :

Specimen Thickness :
Specimen Width :
Specimen Test Frequency :
Data Reference :

Material Properties:

:Matl: No.:	UTS :	YS :	Kle :	Klc :	Ak :	Bk :	Thk :	Kc :	Keac :
: 1 :	**32.0**:	**30.0**:	35.0:	25.0:	1.00:	1.00:	0.259:	49.5:	:

:Matl: No.:	C :	n :	p :	q :	DK1 :	Cth+ :	Alpha:	Smax/: SIGo :
: 1 :	0.900D-08:	3.000:	0.50:	1.00:	0.75:	2.50:	2.00:	0.30:

(Ftu and Fty changed as per Dan Rybicki e-mail dated March 19, 2003 for ftu and RITF report dated 5/22/02 for Fty)

Small crack threshold parameters:
a0 = 0.00150
Limit of ratio DKth(S)/DKth(L) = 0.20

Cth+ = 0, Cth- = 0 are used at start only
Inner Cylinder Weld STA Spectrum
MODEL: SC05

FATIGUE SPECTRUM

Inner Cylinder weld STA spectrum

[Note: Stress = Input Value * Scale Factor]

Stress Scaling Factors for Block Case: 1 **TRUCK1-STA**

Scale Factor for Stress S0: 0.22769
Scale Factor for Stress S1: 0.0000

Stress Scaling Factors for Block Case: 2 **AIR1-STA**

Scale Factor for Stress S0: 0.22769
Scale Factor for Stress S1: 0.0000

Stress Scaling Factors for Block Case: 3 **SINE-STA**

```
Scale Factor for Stress S0:    0.22769
Scale Factor for Stress S1:     0.0000

Stress Scaling Factors for Block Case:  4                ACOUSTIC-STA


Scale Factor for Stress S0:    0.22769
Scale Factor for Stress S1:     0.0000

Stress Scaling Factors for Block Case:  5                GSFC


Scale Factor for Stress S0:    0.22769
Scale Factor for Stress S1:     0.0000

Stress Scaling Factors for Block Case:  6                ONORBIT1-STA

Scale Factor for Stress S0:    0.22769
Scale Factor for Stress S1:     0.0000

Schedule info. was input manually

Total No. of Blocks in Schedule =     32

   Block Number and Case Correspondences
 Block Number                    Block Case No.
From    -    To
    1   -       4                       1
    5   -       8                       2
    9   -      12                       3
   13   -      16                       4
   17   -      28                       5
   29   -      32                       6

Stresses: Tension, bending or pin

---------------------------------
Inner Cylinder Weld STA Spectrum
MODEL: SC05

FATIGUE SCHEDULE BLOCK INPUT TABLE
---------------------------------
Inner Cylinder weld STA spectrum

BLOCK CASE NO.  1

 S  : M:  NUMBER      :         S0          :         S1          :
 T  : A:    OF        :                     :                     :
 E  : T:  FATIGUE     :                     :                     :
 P  : L:  CYCLES      :    (t1) :   (t2)    :    (t1) :   (t2)    :
----:--:-------------:---------:---------:---------:---------:
   1: 1:      1444.00 :    28.40:   -28.40:    28.40:   -28.40:
   2: 1:      1765.00 :    20.50:   -20.50:    20.50:   -20.50:
   3: 1:     11234.00 :    14.80:   -14.80:    14.80:   -14.80:
   4: 1:     31937.00 :    10.60:   -10.60:    10.60:   -10.60:
   5: 1:     90836.00 :     7.60:    -7.60:     7.60:    -7.60:
   6: 1:    123736.00 :     5.60:    -5.60:     5.60:    -5.60:
   7: 1:    160648.00 :     4.00:    -4.00:     4.00:    -4.00:
   8: 1:   1184080.00 :     3.30:    -3.30:     3.30:    -3.30:

Environmental Crack Growth Check for Sustained Stresses
(Kmax less than Keac):  NOT SET
                        -------

BLOCK CASE NO.  2

 S  : M:  NUMBER      :         S0          :         S1          :
 T  : A:    OF        :                     :                     :
 E  : T:  FATIGUE     :                     :                     :
 P  : L:  CYCLES      :    (t1) :   (t2)    :    (t1) :   (t2)    :
----:--:-------------:---------:---------:---------:---------:
   1: 1:     17832.00 :    36.00:   -36.00:    36.00:   -36.00:
   2: 1:       594.00 :    36.00:   -36.00:    36.00:   -36.00:
   3: 1:   1069920.00 :    11.00:   -11.00:    11.40:   -11.40:
   4: 1:        30.00 :    36.00:   -36.00:    36.00:   -36.00:
   5: 1:     17832.00 :    36.00:   -36.00:    36.00:   -36.00:

Environmental Crack Growth Check for Sustained Stresses
```

|Kmax less than Keac): NOT SET

BLOCK CASE NO. 3

S T E P	M: A: T: L:	NUMBER OF FATIGUE CYCLES	S0 (t1)	S0 (t2)	S1 (t1)	S1 (t2)
1:	1:	121.00	104.50:	-104.50:	104.50:	-104.50:
2:	1:	121.00	82.20:	-82.20:	82.20:	-82.20:
3:	1:	121.00	107.20:	-107.20:	107.20:	-107.20:

Environmental Crack Growth Check for Sustained Stresses
|Kmax less than Keac): NOT SET

BLOCK CASE NO. 4

S T E P	M: A: T: L:	NUMBER OF FATIGUE CYCLES	S0 (t1)	S0 (t2)	S1 (t1)	S1 (t2)
1:	1:	9000.00	10.00:	-10.00:	10.00:	-10.00:

Environmental Crack Growth Check for Sustained Stresses

|Kmax less than Keac): NOT SET

BLOCK CASE NO. 5

S T E P	M: A: T: L:	NUMBER OF FATIGUE CYCLES	S0 (t1)	S0 (t2)	S1 (t1)	S1 (t2)
1:	1:	2.00	-100.00:	100.00:	-100.00:	100.00:
2:	1:	4.00	-90.00:	90.00:	-90.00:	90.00:
3:	1:	8.00	-80.00:	80.00:	-80.00:	80.00:
4:	1:	15.00	-70.00:	70.00:	-70.00:	70.00:
5:	1:	49.00	-60.00:	60.00:	-60.00:	60.00:
6:	1:	81.00	-50.00:	50.00:	-50.00:	50.00:
7:	1:	178.00	-40.00:	40.00:	-40.00:	40.00:
8:	1:	641.00	-30.00:	30.00:	-30.00:	30.00:
9:	1:	3120.00	-20.00:	20.00:	-20.00:	20.00:
10:	1:	3405.00	-10.00:	10.00:	-10.00:	10.00:
11:	1:	5019.00	-7.00:	7.00:	-7.00:	7.00:
12:	1:	28853.00	-5.00:	5.00:	-5.00:	5.00:
13:	1:	91655.00	-3.00:	3.00:	-3.00:	3.00:

Environmental Crack Growth Check for Sustained Stresses
|Kmax less than Keac): NOT SET

BLOCK CASE NO. 6

S T E P	M: A: T: L:	NUMBER OF FATIGUE CYCLES	S0 (t1)	S0 (t2)	S1 (t1)	S1 (t2)
1:	1:	34.00	1.02:	-1.02:	1.02:	-1.02:
2:	1:	34.00	0.81:	-0.81:	0.81:	-0.81:
3:	1:	60.00	0.61:	-0.61:	0.61:	-0.61:
4:	1:	179.00	0.41:	-0.41:	0.41:	-0.41:
5:	1:	117.00	1.02:	-1.02:	1.02:	-1.02:
6:	1:	414.00	0.81:	-0.81:	0.81:	-0.81:
7:	1:	2404.00	0.61:	-0.61:	0.61:	-0.61:
8:	1:	9789.00	0.41:	-0.41:	0.41:	-0.41:
9:	1:	62675.00	0.20:	-0.20:	0.20:	-0.20:

Environmental Crack Growth Check for Sustained Stresses
|Kmax less than Keac): NOT SET

Inner Cylinder Weld STA Spectrum
MODEL: SC05

FATIGUE SCHEDULE BLOCK STRESS TABLE

Inner Cylinder weld STA spectrum

S T E P	M: A: T: L:	NUMBER OF FATIGUE CYCLES	S0 (ksi) (t1)	S0 (ksi) (t2)	S1 (ksi) (t1)	S1 (ksi) (t2)
1:	1:	1444.00	6.47:	-6.47:	0.00:	0.00:
2:	1:	1765.00	4.67:	-4.67:	0.00:	0.00:
3:	1:	11234.00	3.37:	-3.37:	0.00:	0.00:
4:	1:	31937.00	2.41:	-2.41:	0.00:	0.00:
5:	1:	90836.00	1.73:	-1.73:	0.00:	0.00:
6:	1:	123736.00	1.28:	-1.28:	0.00:	0.00:
7:	1:	160648.00	0.91:	-0.91:	0.00:	0.00:
8:	1:	1184080.00	0.75:	-0.75:	0.00:	0.00:

Environmental Crack Growth Check for Sustained Stresses
(Kmax less than Keac): NOT SET

Inner Cylinder Weld STA Spectrum
MODEL: SC05

FATIGUE SCHEDULE BLOCK STRESS TABLE

Inner Cylinder weld STA spectrum

S T E P	M: A: T: L:	NUMBER OF FATIGUE CYCLES	S0 (ksi) (t1)	S0 (ksi) (t2)	S1 (ksi) (t1)	S1 (ksi) (t2)
1:	1:	17832.00	8.20:	-8.20:	0.00:	0.00:
2:	1:	594.00	8.20:	-8.20:	0.00:	0.00:
3:	1:	1069920.00	2.50:	-2.50:	0.00:	0.00:
4:	1:	30.00	8.20:	-8.20:	0.00:	0.00:
5:	1:	17832.00	8.20:	-8.20:	0.00:	0.00:

Environmental Crack Growth Check for Sustained Stresses
(Kmax less than Keac): NOT SET

Inner Cylinder Weld STA Spectrum
MODEL: SC05

FATIGUE SCHEDULE BLOCK STRESS TABLE

Inner Cylinder weld STA spectrum

S T E P	M: A: T: L:	NUMBER OF FATIGUE CYCLES	S0 (ksi) (t1)	S0 (ksi) (t2)	S1 (ksi) (t1)	S1 (ksi) (t2)
1:	1:	121.00	23.79:	-23.79:	0.00:	0.00:
2:	1:	121.00	18.72:	-18.72:	0.00:	0.00:
3:	1:	121.00	24.41:	-24.41:	0.00:	0.00:

Environmental Crack Growth Check for Sustained Stresses
(Kmax less than Keac): NOT SET

Inner Cylinder Weld STA Spectrum
MODEL: SC05

FATIGUE SCHEDULE BLOCK STRESS TABLE

Inner Cylinder weld STA spectrum

S T E P	M: A: T: L:	NUMBER OF FATIGUE CYCLES	S0 (ksi) (t1)	S0 (ksi) (t2)	S1 (ksi) (t1)	S1 (ksi) (t2)
1:	1:	9000.00	2.28:	-2.28:	0.00:	0.00:

Environmental Crack Growth Check for Sustained Stresses
(Kmax less than Keac): NOT SET

Inner Cylinder Weld STA Spectrum
MODEL: SC05

FATIGUE SCHEDULE BLOCK STRESS TABLE

Inner Cylinder weld STA spectrum

S T E P	M: A: T: L:	NUMBER OF FATIGUE CYCLES	S0 (ksi) (t1)	S0 (ksi) (t2)	S1 (ksi) (t1)	S1 (ksi) (t2)
1:	1:	2.00	-22.77:	22.77:	0.00:	0.00:
2:	1:	4.00	-20.49:	20.49:	0.00:	0.00:
3:	1:	8.00	-18.22:	18.22:	0.00:	0.00:
4:	1:	15.00	-15.94:	15.94:	0.00:	0.00:
5:	1:	49.00	-13.66:	13.66:	0.00:	0.00:
6:	1:	81.00	-11.38:	11.38:	0.00:	0.00:
7:	1:	178.00	-9.11:	9.11:	0.00:	0.00:
8:	1:	641.00	-6.83:	6.83:	0.00:	0.00:
9:	1:	3120.00	-4.55:	4.55:	0.00:	0.00:
10:	1:	3405.00	-2.28:	2.28:	0.00:	0.00:
11:	1:	5019.00	-1.59:	1.59:	0.00:	0.00:
12:	1:	28853.00	-1.14:	1.14:	0.00:	0.00:
13:	1:	91655.00	-0.68:	0.68:	0.00:	0.00:

Environmental Crack Growth Check for Sustained Stresses
(Kmax less than Keac): NOT SET

Inner Cylinder Weld STA Spectrum
MODEL: SC05

FATIGUE SCHEDULE BLOCK STRESS TABLE

Inner Cylinder weld STA spectrum

S T E P	M: A: T: L:	NUMBER OF FATIGUE CYCLES	S0 (ksi) (t1)	S0 (ksi) (t2)	S1 (ksi) (t1)	S1 (ksi) (t2)
1:	1:	34.00	0.23:	-0.23:	0.00:	0.00
2:	1:	34.00	0.18:	-0.18:	0.00:	0.00:
3:	1:	60.00	0.14:	-0.14:	0.00:	0.00:
4:	1:	179.00	0.09:	-0.09:	0.00:	0.00:
5:	1:	117.00	0.23:	-0.23:	0.00:	0.00:
6:	1:	414.00	0.18:	-0.18:	0.00:	0.00:
7:	1:	2404.00	0.14:	-0.14:	0.00:	0.00:
8:	1:	9789.00	0.09:	-0.09:	0.00:	0.00:
9:	1:	62675.00	0.05:	-0.05:	0.00:	0.00:

Environmental Crack Growth Check for Sustained Stresses
(Kmax less than Keac): NOT SET

Inner Cylinder Weld STA Spectrum
MODEL: SC05

Prepared By	Name/Date C. Bala / 3-24-03	LOCKHEED MARTIN	File Name IC_fract.doc
Checked By	3/31/03	Science, Engineering, Analysis, & Test *Mechanical Systems Analysis Department*	Drawing No. SDG39135781
Title: Vacuum Case Inner Cylinder Weld Fracture analysis			

ANALYSIS RESULTS:

Schedule	Block	Step	Cycles	Crack a	Crack c	Max Kmax(a)	Max Kmax(c)
0	0	0	0.00	0.75000E-01	0.75000E-01	-	-
1	4	-	6422720.00	0.75284E-01	0.75304E-01	2.08	2.35
1	8	-	10847552.00	0.85289E-01	0.85859E-01	2.83	3.20
1	12	-	10849004.00	0.88652E-01	0.89438E-01	8.61	9.75
1	16	-	10885004.00	0.88652E-01	0.89438E-01	0.803	0.908
1	20	-	11417124.00	0.89284E-01	0.90111E-01	8.05	9.11
1	24	-	11949244.00	0.89924E-01	0.90794E-01	8.08	9.15
1	28	-	12481364.00	0.90573E-01	0.91488E-01	8.12	9.19
1	32	-	12784188.00	0.90573E-01	0.91488E-01	0.829E-01	0.938E-01
1	32	9	12784188.00	0.90573E-01	0.91488E-01	0.162E-01	0.184E-01

FINAL RESULTS:
Critical Crack Size has NOT been reached.

at Cycle No. 52675.00
of Load Step No. 9 Description: None
of Block No. 32
of Schedule No. 1

Crack Sizes: a = 0.905735E-01 , c = 0.914875E-01 , a/c = 0.9900
Total Cycles = 12784188.

Inner Cylinder Weld Flight Spectrum

Material: 2219-T852 weld
NASA/FLAGRO Crack case type: SC05

Section Properties:
- Plate thickness: t = 0.259 in.
- Outer diameter: D = 44.398 in.
- Poisson's ratio: ν= 0.33 in.

Crack Properties:
- a = 0.075 in.(dye penetrant inspection)
- c = 0.075 in.
- a/c = 1.0

Loads:
- Max. tension stress in weld: S0= 22769 psi (ref. Sect1.1.2, page 9)

The inner cylinder has closeout welds at the top and bottom of the cylinder adjacent to the conical flanges. The max. tensile stress in the weld is 22769 ksi (Load case R1045, Elem. ID 30224, model 6-02a loads). The Flagro analysis for the Flight VC uses the truck, Air, On-Orbit and Launch/Landing case spectrums. The material data used is for 2219-T852 forging. from the NASGRO library except the Ftu and Fty are changed as per the e-mail from Dan Rybicki dated March 19, 03 for Ftu, and RITF weld test report dated 5/22/02 for Fty. The results of the analysis show that the crack growth is stable.

FATIGUE CRACK GROWTH ANALYSIS

DATE: 24-Mar-03 TIME: 13:20:35
(NASGRO Version 4.02, September 2002.)
U.S. customary units [inches, ksi, ksi sqrt(in)]

PROBLEM TITLE

Inner Cylinder Weld Flight Spectrum

Crack Growth Model: Non Interaction
Ratio of growth increment to current crk size= 0.0050
Equation/Table : NASGRO Equation

GEOMETRY

MODEL: SC05-Surf. crk (2D) on cylinder circ. plane at OD.

Crack Type = INTERNAL

Cylinder Thickness, t = 0.2590
Outer Diameter, D = 44.3980
Poissons Ratio = 0.3300

FLAW SIZE: (User specified)

a (init.) = 0.7500E-01
c (init.) = 0.7500E-01
a/c (init.) = 1.000

MATERIAL

MATL 1: 1000-9000 SERIES AL [**Manual data input**]
2000 series

Material Header Info.:

Material 1 Data ID: M2IE23AD1
Alloy Description : 2219-T852 Al

Alloy Cond/HT : Forged; L-T & T-L; HHA; Room te
mp
Product Form :

Environment :

Specimen Type :
Specimen Orientation :
Specimen Thickness :
Specimen Width :
Specimen Test Frequency :
Data Reference :

Material Properties:

Matl: No.	UTS	YS	K1e	K1c	Ak	Bk	Thk	Kc	Keac
1	**32.0**	**30.0**	35.0	25.0	1.00	1.00	0.259	49.5	

Matl: No.	Crack Growth Eqn Constants C	n	p	q	DK1	Cth+	Alpha	Smax/SIGo
1	0.900D-08	3.000	0.50	1.00	0.75	2.50	2.00	0.30

(Ftu and Fty changed as per Dan Rybicki e-mail dated March 19, 2003 for ftu and RITF report dated 5/22/02 for Fty)
Small crack threshold parameters:
a0 = 0.00150
Limit of ratio DKth(S)/DKth(L) = 0.20

Cth+ = 0, Cth- = 0 are used at start only
Inner Cylinder Weld Flight Spectrum

MODEL: SC05

FATIGUE SPECTRUM

Inner Cylinder weld Flight spectrum

[Note: Stress = Input Value * Scale Factor]

Stress Scaling Factors for Block Case: 1 **TRUCK2-VC**

Scale Factor for Stress S0: 0.22769
Scale Factor for Stress S1: 0.0000

Stress Scaling Factors for Block Case: 2 **AIR2-VC**

Scale Factor for Stress S0: 0.22769
Scale Factor for Stress S1: 0.0000

Stress Scaling Factors for Block Case: 3 **GSFC**

Scale Factor for Stress S0: 0.22769
Scale Factor for Stress S1: 0.0000

Stress Scaling Factors for Block Case: 4 **ONORBIT2-VCMAGNET**

Scale Factor for Stress S0: 0.22769
Scale Factor for Stress S1: 0.0000

Schedule info. was input manually

Total No. of Blocks in Schedule = 24

Block Number and Case Correspondences

Block Number From	-	To	Block Case No.
1	-	4	1
5	-	8	2
9	-	20	3
21	-	24	4

Stresses: Tension, bending or pin

Inner Cylinder Weld Flight Spectrum
MODEL: SC05

FATIGUE SCHEDULE BLOCK INPUT TABLE

Inner Cylinder weld Flight spectrum

BLOCK CASE NO. 1

S T E P	M: A: T: L:	NUMBER OF FATIGUE CYCLES	S0 (t1)	S0 (t2)	S1 (t1)	S1 (t2)
1:	1:	3081.00	28.40:	-28.40:	28.40:	-28.40:
2:	1:	3766.00	20.50:	-20.50:	20.50:	-20.50:
3:	1:	23966.00	14.80:	-14.80:	14.80:	-14.80:
4:	1:	68133.00	10.60:	-10.60:	10.60:	-10.60:
5:	1:	193784.00	7.60:	-7.60:	7.60:	-7.60:
6:	1:	263971.00	5.60:	-5.60:	5.60:	-5.60:
7:	1:	342717.00	4.00:	-4.00:	4.00:	-4.00:
8:	1:	2526038.00	3.30:	-3.30:	3.30:	-3.30:

Environmental Crack Growth Check for Sustained Stresses
(Kmax less than Keac): NOT SET

BLOCK CASE NO. 2

S T E P	M: A: T: L:	NUMBER OF FATIGUE CYCLES	S0 (t1)	S0 (t2)	S1 (t1)	S1 (t2)
1:	1:	26748.00	36.00:	-36.00:	36.00:	-36.00:
2:	1:	892.00	36.00:	-36.00:	36.00:	-36.00:
3:	1:	1230408.00	11.00:	-11.00:	11.40:	-11.40:
4:	1:	45.00	36.00:	-36.00:	36.00:	-36.00:
5:	1:	26748.00	36.00:	-36.00:	36.00:	-36.00:

Environmental Crack Growth Check for Sustained Stresses
(Kmax less than Keac): NOT SET

BLOCK CASE NO. 3

S T E P	M: A: T: L:	NUMBER OF FATIGUE CYCLES	S0 (t1)	S0 (t2)	S1 (t1)	S1 (t2)
1:	1:	2.00	-100.00:	100.00:	-100.00:	100.00:
2:	1:	4.00	-90.00:	90.00:	-90.00:	90.00:
3:	1:	8.00	-80.00:	80.00:	-80.00:	80.00:
4:	1:	15.00	-70.00:	70.00:	-70.00:	70.00:
5:	1:	49.00	-60.00:	60.00:	-60.00:	60.00:
6:	1:	81.00	-50.00:	50.00:	-50.00:	50.00:
7:	1:	178.00	-40.00:	40.00:	-40.00:	40.00:
8:	1:	641.00	-30.00:	30.00:	-30.00:	30.00:
9:	1:	3120.00	-20.00:	20.00:	-20.00:	20.00:
10:	1:	3405.00	-10.00:	10.00:	-10.00:	10.00:
11:	1:	5019.00	-7.00:	7.00:	-7.00:	7.00:
12:	1:	28853.00	-5.00:	5.00:	-5.00:	5.00:
13:	1:	91655.00	-3.00:	3.00:	-3.00:	3.00:

Environmental Crack Growth Check for Sustained Stresses
(Kmax less than Keac): NOT SET

BLOCK CASE NO. 4

S T E P	M: A: T: L:	NUMBER OF FATIGUE CYCLES	S0 (t1)	S0 (t2)	S1 (t1)	S1 (t2)
1:	1:	34.00	14.10:	8.50:	14.10:	8.50:
2:	1:	34.00	13.90:	8.50:	13.90:	8.50:
3:	1:	60.00	13.70:	8.50:	13.70:	8.50:
4:	1:	179.00	13.50:	8.50:	13.50:	8.50:
5:	1:	117.00	14.10:	8.50:	14.10:	8.50:
6:	1:	414.00	13.90:	8.50:	13.90:	8.50:
7:	1:	2404.00	13.70:	8.50:	13.70:	8.50:
8:	1:	9789.00	13.50:	8.50:	13.50:	8.50:
9:	1:	62675.00	13.40:	8.50:	13.40:	8.50:

Environmental Crack Growth Check for Sustained Stresses
(Kmax less than Keac): NOT SET

Inner Cylinder Weld Flight Spectrum
MODEL: SC05

FATIGUE SCHEDULE BLOCK STRESS TABLE

Inner Cylinder weld Flight spectrum

S T E P	M: A: T: L:	NUMBER OF FATIGUE CYCLES	S0 (ksi) (t1)	S0 (ksi) (t2)	S1 (ksi) (t1)	S1 (ksi) (t2)
1:	1:	3091.00	6.47:	-6.47:	0.00:	0.00:
2:	1:	3766.00	4.67:	-4.67:	0.00:	0.00:

3:	1:	23966.00 :	3.37:	-3.37:	0.00:	0.00:
4:	1:	68133.00 :	2.41:	-2.41:	0.00:	0.00:
5:	1:	193784.00 :	1.73:	-1.73:	0.00:	0.00:
6:	1:	263971.00 :	1.28:	-1.28:	0.00:	0.00:
7:	1:	342717.00 :	0.91:	-0.91:	0.00:	0.00:
8:	1:	2526038.00 :	0.75:	-0.75:	0.00:	0.00:

Environmental Crack Growth Check for Sustained Stresses
(Kmax less than Keac): NOT SET

Inner Cylinder Weld Flight Spectrum
MODEL: SC05

FATIGUE SCHEDULE BLOCK STRESS TABLE

Inner Cylinder weld Flight spectrum

S T E P	M: A: T: L:	NUMBER OF FATIGUE CYCLES	S0 (ksi) (t1)	S0 (ksi) (t2)	S1 (ksi) (t1)	S1 (ksi) (t2)
1:	1:	26748.00 :	8.20:	-8.20:	0.00:	0.00:
2:	1:	892.00 :	8.20:	-8.20:	0.00:	0.00:
3:	1:	1230408.00 :	2.50:	-2.50:	0.00:	0.00:
4:	1:	45.00 :	8.20:	-8.20:	0.00:	0.00:
5:	1:	26748.00 :	8.20:	-8.20:	0.00:	0.00:

Environmental Crack Growth Check for Sustained Stresses
(Kmax less than Keac): NOT SET

Inner Cylinder Weld Flight Spectrum
MODEL: SC05

FATIGUE SCHEDULE BLOCK STRESS TABLE

Inner Cylinder weld Flight spectrum

S T E P	M: A: T: L:	NUMBER OF FATIGUE CYCLES	S0 (ksi) (t1)	S0 (ksi) (t2)	S1 (ksi) (t1)	S1 (ksi) (t2)
1:	1:	2.00 :	-22.77:	22.77:	0.00:	0.00:
2:	1:	4.00 :	-20.49:	20.49:	0.00:	0.00:
3:	1:	8.00 :	-18.22:	18.22:	0.00:	0.00:
4:	1:	15.00 :	-15.94:	15.94:	0.00:	0.00:
5:	1:	49.00 :	-13.66:	13.66:	0.00:	0.00:
6:	1:	81.00 :	-11.38:	11.38:	0.00:	0.00:
7:	1:	178.00 :	-9.11:	9.11:	0.00:	0.00:
8:	1:	641.00 :	-6.83:	6.83:	0.00:	0.00:
9:	1:	3120.00 :	-4.55:	4.55:	0.00:	0.00:
10:	1:	3405.00 :	-2.28:	2.28:	0.00:	0.00:
11:	1:	5019.00 :	-1.59:	1.59:	0.00:	0.00:
12:	1:	28853.00 :	-1.14:	1.14:	0.00:	0.00:
13:	1:	91655.00 :	-0.68:	0.68:	0.00:	0.00:

Environmental Crack Growth Check for Sustained Stresses
(Kmax less than Keac): NOT SET

Inner Cylinder Weld Flight Spectrum
MODEL: SC05

Prepared By	Name/Date C. Bala / 3-24-03	LOCKHEED MARTIN	File Name IC_fract.doc
Checked By	[signature] 3/31/03	Science, Engineering, Analysis, & Test *Mechanical Systems Analysis Department*	Drawing No. SDG39135781
Title: Vacuum Case Inner Cylinder Weld Fracture analysis			

FATIGUE SCHEDULE BLOCK STRESS TABLE

Inner Cylinder weld Flight spectrum

STEP	MAG	NUMBER OF FATIGUE CYCLES	S0 (ksi) (t1)	S0 (ksi) (t2)	S1 (ksi) (t1)	S1 (ksi) (t2)
1	1	34.00	3.21	1.94	0.00	0.00
2	1	34.00	3.16	1.94	0.00	0.00
3	1	60.00	3.12	1.94	0.00	0.00
4	1	179.00	3.07	1.94	0.00	0.00
5	1	117.00	3.21	1.94	0.00	0.00
6	1	414.00	3.16	1.94	0.00	0.00
7	1	2404.00	3.12	1.94	0.00	0.00
8	1	9789.00	3.07	1.94	0.00	0.00
9	1	62675.00	3.05	1.94	0.00	0.00

Environmental Crack Growth Check for Sustained Stresses
(Kmax less than Keac): NOT SET

Inner Cylinder Weld Flight Spectrum
MODEL: SC05
ANALYSIS RESULTS:

Schedule	Block	Step	Cycles	Crack a	Crack c	Max Kmax(a)	Max Kmax(c)
0	0	0	0.00	0.75000E-01	0.75000E-01	-	-
1	4	-	13701824.00	0.75610E-01	0.75652E-01	2.09	2.35
1	8	-	16841188.00	0.91737E-01	0.92721E-01	2.95	3.34
1	12	-	19373308.00	0.92412E-01	0.93442E-01	8.21	9.30
1	16	-	19905428.00	0.93096E-01	0.94175E-01	8.24	9.34
1	20	-	20437548.00	0.93789E-01	0.94918E-01	8.27	9.38
1	24	-	20740372.00	0.93789E-01	0.94918E-01	1.17	1.32
1	24	9	20740372.00	0.93789E-01	0.94918E-01	1.11	1.26

FINAL RESULTS:
Critical Crack Size has NOT been reached.

at Cycle No. 62675.00
of Load Step No. 9 Description: None
of Block No. 24
of Schedule No. 1

Crack Sizes: a = 0.937895E-01 , c = 0.949183E-01 , a/c = 0.9881
Total Cycles = 20740372.

Prepared By	Name/Date C. Bala / 3-24-03	LOCKHEED MARTIN	File Name IC_fract.doc
Checked By	3/31/03	Science, Engineering, Analysis, & Test *Mechanical Systems Analysis Department*	Drawing No. SDG39135781
Title: Vacuum Case Inner Cylinder and Weld Fracture analysis			

From: RYBICKI, DANIEL (JSC-ES4) (LM) [daniel.rybicki@lmco.com]
Sent: Wednesday, March 19, 2003 4:59 PM
To: 'Carter, Howard'
Cc: Sommer, Bruce; Balas, Chittur; MARTINEZ, ADRIEN (NICK) (JSC-ES4) (LM); FIGERT, JOHN D. (JSC-ES4) (LM); 'phil.mott@lmco.com'; 'trent.martin@lmco.com'; 'r.dasgupta@lmco.com'
Subject: RE: AMS-02 VC Inner Cylinder weld temperatures for landing - Weld Allowable

Howard,

Based on our roundtable discussion yesterday with regarding the need for a new allowable for the VC closeout weld joints, I think we all are in agreement on an allowable of 32 ksi, provided the max environmental temperature issue can be resolved, and it appears it may have been according to Craig's message below. This value (32 ksi minimum) is compliant with the Class II weld requirement stated by MSFC-SPEC-504C (governing document) however, we agreed that the fabricators qualification data population shall exhibit NO DATA VALUES lower than 32 ksi which realistically will result in a population mean (average) greater than 32 ksi which is better than the the Class II stated minimum average strength of 32 ksi. So essentially, we are ignoring a minimum average requirement and just asking for a minimum absolute strength.

So, the drawing/SOW should state something to the tune of:

"Welding shall be per MSFC-SPEC-504C, Class II except that the weld process shall be qualified to show the capability to produce a weld strength whereas no single test value from the test sample population results in less than 32 ksi. All qualification test welds and test specimens shall conform to paragraph 3.3.2 of MSFC-SPEC-504C."

With the stated requirement written as such in the SOW, our current baselined welding process remains capable of achieving that as we always showed values higher than 32 ksi. So it's a good thing we don't have to deviate from that. Moreover, as a contingency position, we can always fall back on the weld procedure with an oscillated cover pass (wider weld bead) to gain more strength but we shouldn't reveal that hand unless the vendor shows to be in trouble with their weld process qualification efforts.

Does everyone agree with this new requirement and the way we need to state it as an engineering requirement?

Dan Rybicki
Materials & Processes
Welding and Brazing Applications
LMSO-NASA/JSC - ES4
(281) 244-5181 Phone
(281) 527-6581 Pager
(281) 244-1301 Fax
daniel.rybicki@jsc.nasa.gov

Prepared By	Name/Date C. Bala / 3-24-03	LOCKHEED MARTIN	File Name IC_fract.doc
Checked By	[illegible] 3/31/03	Science, Engineering, Analysis, & Test *Mechanical Systems Analysis Department*	Drawing No. SDG39135781
Title: Vacuum Case Inner Cylinder and Weld Fracture analysis			

Revised RITF Material Test Report

JSC Receiving Inspection and Test Facility
Johnson Space Center - Building 15 Hibay - M/S NT311
Houston, Texas 77058
Fax 281-483-0355 Voice 483-0366

Customer:
Lockheed Martin / EM
Houston
Requester/Phone:
John Figert
281-483-8919
Fax Number:
281-244-1301
Cust. Control No:
N/A
Date Received:
5/21/2002
Date Completed:
5/22/2002

Report Number:
0200577
Description:
STRAIGHT TENSILE SAM
Part Number:
AMS02-027
Manufacturer:
ES4
Distributor:
UNKNOWN
Lot Number:
UNKNOWN
Quantity Tested:
16

MECHANICAL PROPERTIES

TENSILE TEST RESULTS **Test Procedure:** ASTM E8

Requirement: None

SAMPLE ID	ULT. STRENGTH (PSI)	YIELD STRESS (PSI)	% REDUCTION OF AREA	% ELONGATION	PASS/FAIL	TEST COMMENTS
0200577-000	36578.0	32545.	-N.M.-	2.7	N/A	T1
0200577-001	34765.0	30619.	-N.M.-	2.4	N/A	T2
0200577-002	33889.0	28922.	-N.M.-	2.1	N/A	T3
0200577-003	35648.0	31137.	-N.M.-	2.9	N/A	T4
0200577-004	34619.0	29762.	-N.M.-	2.8	N/A	T5
0200577-005	35203.0	29840.	-N.M.-	3.0	N/A	T6
0200577-006	34592.0	28974.	-N.M.-	3.0	N/A	T7
0200577-007	34761.0	29246.	-N.M.-	2.7	N/A	T8
0200577-008	36270.0	31044.	-N.M.-	2.7	N/A	T9
0200577-009	35920.0	30913.	-N.M.-	2.6	N/A	T10
0200577-010	34727.0	29372.	-N.M.-	2.8	N/A	T11
0200577-011	33666.0	30125.	-N.M.-	2.3	N/A	T12
0200577-012	33895.0	28707.	-N.M.-	2.7	N/A	T13
0200577-013	34640.0	30324.	-N.M.-	2.7	N/A	T14
0200577-014	32298.0	29165.	-N.M.-	2.7	N/A	T15
0200577-015	32541.0	29097.	-N.M.-	2.6	N/A	T16

Measurement uncertainty +/- 45%
Gage Length: 2.00 inch(s)

REVISION REASON: Corrected LIMS data entry

SPECIAL NOTES: **None**

REPORT APPROVED BY: Lisa P. Stephens **DATE APPROVED :** 5/22/2002
TITLE: Senior Technician

THESE TEST RESULTS RELATE ONLY TO THE SAMPLES TESTED. THIS REPORT SHALL NOT BE REPRODUCED, EXCEPT IN FULL, WITHOUT THE WRITTEN APPROVAL OF THE LABORATORY.

$\bar{x}_{Ftu} = 34,626$ $\bar{x}_{Fty} = 29,987$

0200577 $\sigma_{Ftu} = 1,156$ $\sigma_{Fty} = 1,020$

$\bar{x}_{\%\,Elong} = 2.7$

$\sigma_{\%\,Elong} = 0.23$

Sect 2.1.3 SUPPORT RINGS

FRACTURE ANALYSIS

Prepared By	Name/Date M.Gutierrez / 3-9-03	LOCKHEED MARTIN	File Name Lwrring_flange.doc
Checked By	3/11/03	Science, Engineering, Analysis, & Test *Mechanical Systems Analysis Department*	Drawing No. SDG39135785
Title: **Lower Support Ring flange fracture Analysis**			

SC01

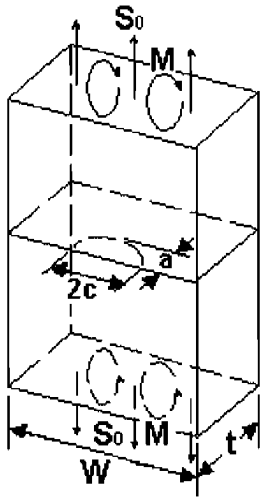

$$S_1 = \frac{6M}{Wt^2}$$

$$0 < \frac{2c}{W} \leq 1$$

$$0.1 \leq \frac{a}{c} \leq 1.2$$

Lower Support Ring Flange

Material	7050-T7452
NASA/FLAGRO Crack type	SC01
Section Properties:	
Plate thickness t	0.149 in
Plate width w	1.625 in
Crack Properties:	a = 0.025 in c = 0.025 in
Stress:	S0 = 21.594 ksi (ref. Sect 1.1.4 , page)

The material data is used from the NASGRO library material data ID M7GK21AB1, 7050-T7452 except the Ftu and Fty which are changed to match MIL-HDBK-5H allowables (Ref. MIL-HDBK-5H, table 3.7.3.0 (d), 6.0 to 7.0 in thick)
The spectrum for the fracture analysis is obtained from the AMS-02 Structural Verification Plan JSC 28792 Rev. C sect 8. The STA spectrum includes Truck transport, Air transport, Sine sweep test, Acoustic test, Launch/ Landing and On orbit and loads.
The truck, air, sine sweep, acoustic and on orbit loads are run for one mission and the Launch/landing for 3 missions. The results show that the crack growth is stable

Prepared By	Name/Date M Gutierrez / 3-9-03	LOCKHEED MARTIN Science, Engineering, Analysis, & Test *Mechanical Systems Analysis Department*	File Name Lwrring_flange.doc
Checked By	3/9/03		Drawing No. SDG39135785
Title: **Lower Support Ring flange fracture Analysis**			

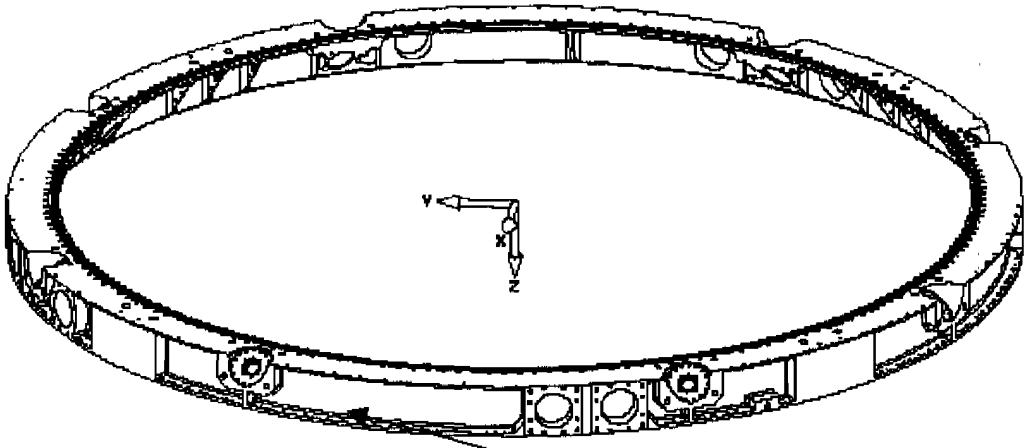

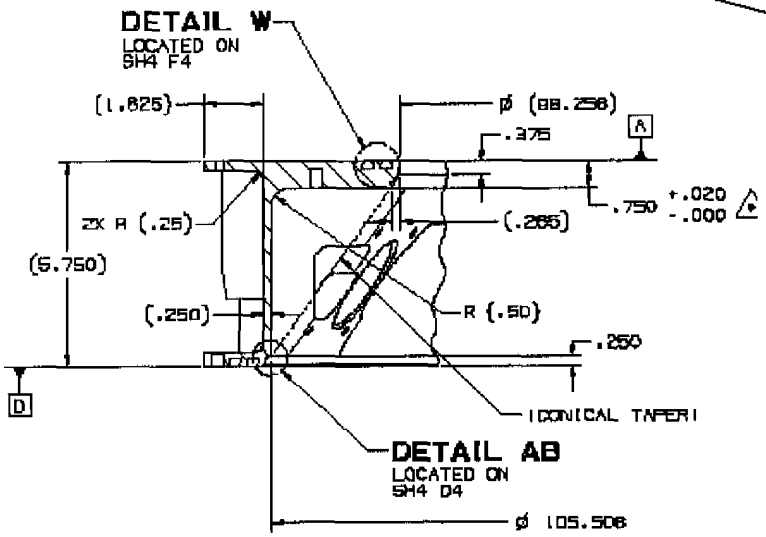

Crack location at flange attaching to Outer cylinder

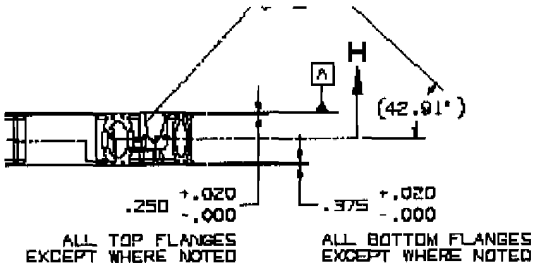

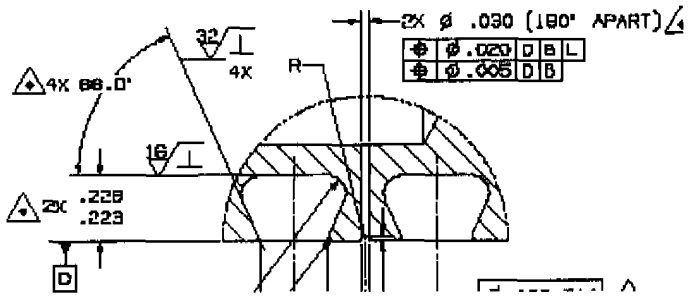

Flange thickness (used for fracture analysis) = 0.375-0.226 = 0.149 in

FATIGUE CRACK GROWTH ANALYSIS

DATE: 08-Mar-03 TIME: 08:30:14
(NASGRO Version 4.02, September 2002.)
U.S. customary units [inches, ksi, ksi sqrt(in)]

PROBLEM TITLE

Lower Support Ring Outer chord Flange STA

Crack Growth Model: Non Interaction
Ratio of growth increment to current crk size= 0.0050
Equation/Table : NASGRO Equation

GEOMETRY

MODEL: SC01-Surface crack (2D) in finite width plate.

Plate Thickness, t = 0.1490
Plate Width, W = 1.6250

FLAW SIZE: (User specified)

a (init.) = 0.2500E-01
c (init.) = 0.2500E-01
a/c (init.) = 1.000

MATERIAL

MATL 1: 1000-9000 SERIES AL [**Manual data input**]
7000 series

Material Header Info.:

Material 1 Data ID: M7GK21AB1
Alloy Description : 7050-T7452

Alloy Cond/HT : Forged; L-T; LA; Room temp

Product Form :

Environment :

Specimen Type :
Specimen Orientation :
Specimen Thickness :
Specimen Width :
Specimen Test Frequency :
Data Reference :

Material Properties:

Matl: No.	UTS	YS	K1e	K1c	Ak	Bk	Thk	Kc	Keac
1	**65.0**	**51.0**	41.0	31.0	1.00	2.00	0.149	91.4	

Matl: No.	Crack Growth Eqn Constants C	n	p	q	DK1	Cth+	Alpha	Smax/SIGo
1	0.200D-07	3.000	0.50	0.50	0.70	2.50	2.00	0.30

(Material ultimate and yield strength UTS and YS changed as per MIL-HDBK-5H, table 3.7.3.0 (d), thickness 6.0 to 7.0 in.)

Small crack threshold parameters:
a0 = 0.00150
Limit of ratio DKth(S)/DKth(L) = 0.20

Cth+ = 0, Cth- = 0 are used at start only
Lower Support Ring Outer chord Flange STA
MODEL: SC01

FATIGUE SPECTRUM

Lower Support Ring flange STA

[Note: Stress = Input Value * Scale Factor]

Stress Scaling Factors for Block Case: 1 **TRUCK1-STA**

Scale Factor for Stress S0: 0.21594
Scale Factor for Stress S1: 0.0000

Stress Scaling Factors for Block Case: 2 **AIR1-STA**

Scale Factor for Stress S0: 0.21594
Scale Factor for Stress S1: 0.0000

Stress Scaling Factors for Block Case: 3 **SINE-STA**

Scale Factor for Stress S0: 0.21594
Scale Factor for Stress S1: 0.0000

Stress Scaling Factors for Block Case: 4 **ACOUSTIC-STA**

Scale Factor for Stress S0: 0.21594
Scale Factor for Stress S1: 0.0000

Stress Scaling Factors for Block Case: 5 **GSFC-STA**

Scale Factor for Stress S0: 0.21594
Scale Factor for Stress S1: 0.0000

Stress Scaling Factors for Block Case: 6 **ONORBIT1-STA**

Scale Factor for Stress S0: 0.21594
Scale Factor for Stress S1: 0.0000

Schedule info. was input manually

Total No. of Blocks in Schedule = 32

Block Number and Case Correspondences

Block Number From	-	To	Block Case No.
1	-	4	1
5	-	8	2
9	-	12	3
13	-	16	4
17	-	28	5
29	-	32	6

Stresses: Tension, bending or pin

Lower Support Ring Outer chord Flange STA
MODEL: SC01

FATIGUE SCHEDULE BLOCK INPUT TABLE

Lower Support Ring flange STA

BLOCK CASE NO. 1 **TRUCK1-STA**

S T E P	M: A: T: L:	NUMBER OF FATIGUE CYCLES	S0 (t1)	S0 (t2)	S1 (t1)	S1 (t2)
1:	1:	1444.00 :	28.40:	-28.40:	28.40:	-28.40:
2:	1:	1765.00 :	20.50:	-20.50:	20.50:	-20.50:
3:	1:	11234.00 :	14.80:	-14.80:	14.80:	-14.80:
4:	1:	31937.00 :	10.60:	-10.60:	10.60:	-10.60:
5:	1:	90836.00 :	7.60:	-7.60:	7.60:	-7.60:
6:	1:	123736.00 :	5.60:	-5.60:	5.60:	-5.60:
7:	1:	160648.00 :	4.00:	-4.00:	4.00:	-4.00:
8:	1:	1184080.00 :	3.30:	-3.30:	3.30:	-3.30:

Environmental Crack Growth Check for Sustained Stresses

(Kmax less than Keac): NOT SET

BLOCK CASE NO. 2 **AIR1-STA**

S T E P	M: A: T: L:	NUMBER OF FATIGUE CYCLES	S0 (t1)	S0 (t2)	S1 (t1)	S1 (t2)
1:	1:	17832.00	36.00:	-36.00:	36.00:	-36.00:
2:	1:	594.00	36.00:	-36.00:	36.00:	-36.00:
3:	1:	1069920.00	11.00:	-11.00:	11.40:	-11.40:
4:	1:	30.00	36.00:	-36.00:	36.00:	-36.00:
5:	1:	17832.00	36.00:	-36.00:	36.00:	-36.00:

Environmental Crack Growth Check for Sustained Stresses
(Kmax less than Keac): NOT SET

BLOCK CASE NO. 3 **SINE-STA**

S T E P	M: A: T: L:	NUMBER OF FATIGUE CYCLES	S0 (t1)	S0 (t2)	S1 (t1)	S1 (t2)
1:	1:	121.00	104.50:	-104.50:	104.50:	-104.50:
2:	1:	121.00	82.20:	-82.20:	82.20:	-82.20:
3:	1:	121.00	107.20:	-107.20:	107.20:	-107.20:

Environmental Crack Growth Check for Sustained Stresses
(Kmax less than Keac): NOT SET

BLOCK CASE NO. 4 **ACOUSTIC-STA**

S T E P	M: A: T: L:	NUMBER OF FATIGUE CYCLES	S0 (t1)	S0 (t2)	S1 (t1)	S1 (t2)
1:	1:	9000.00	10.00:	-10.00:	10.00:	-10.00:

Environmental Crack Growth Check for Sustained Stresses
(Kmax less than Keac): NOT SET

BLOCK CASE NO. 5 **GSFC-STA**

S T E P	M: A: T: L:	NUMBER OF FATIGUE CYCLES	S0 (t1)	S0 (t2)	S1 (t1)	S1 (t2)
1:	1:	2.00	-100.00:	100.00:	-100.00:	100.00:
2:	1:	4.00	-90.00:	90.00:	-90.00:	90.00:
3:	1:	8.00	-80.00:	80.00:	-80.00:	80.00:
4:	1:	15.00	-70.00:	70.00:	-70.00:	70.00:
5:	1:	49.00	-60.00:	60.00:	-60.00:	60.00:
6:	1:	81.00	-50.00:	50.00:	-50.00:	50.00:
7:	1:	178.00	-40.00:	40.00:	-40.00:	40.00:
8:	1:	641.00	-30.00:	30.00:	-30.00:	30.00:
9:	1:	3120.00	-20.00:	20.00:	-20.00:	20.00:
10:	1:	3405.00	-10.00:	10.00:	-10.00:	10.00:
11:	1:	5019.00	-7.00:	7.00:	-7.00:	7.00:
12:	1:	28853.00	-5.00:	5.00:	-5.00:	5.00:
13:	1:	91655.00	-3.00:	3.00:	-3.00:	3.00:

Environmental Crack Growth Check for Sustained Stresses
(Kmax less than Keac): NOT SET

BLOCK CASE NO. 6 **ONORBIT1-STA**

S T E P	M: A: T: L:	NUMBER OF FATIGUE CYCLES	S0 (t1)	S0 (t2)	S1 (t1)	S1 (t2)

1:	1:	34.00	1.02:	-1.02:	1.02:	-1.02:
2:	1:	34.00	0.81:	-0.81:	0.81:	-0.81:
3:	1:	60.00	0.61:	-0.61:	0.61:	-0.61:
4:	1:	179.00	0.41:	-0.41:	0.41:	-0.41:
5:	1:	117.00	1.02:	-1.02:	1.02:	-1.02:
6:	1:	414.00	0.81:	-0.81:	0.81:	-0.81:
7:	1:	2404.00	0.61:	-0.61:	0.61:	-0.61:
8:	1:	9789.00	0.41:	-0.41:	0.41:	-0.41:
9:	1:	62675.00	0.20:	-0.20:	0.20:	-0.20:

Environmental Crack Growth Check for Sustained Stresses
(Kmax less than Keac): NOT SET

Lower Support Ring Outer chord Flange STA
MODEL: SC01

FATIGUE SCHEDULE BLOCK STRESS TABLE

Lower Support Ring flange STA

S T E P	M: A: T: L:	NUMBER OF FATIGUE CYCLES	S0 (ksi) (t1)	S0 (ksi) (t2)	S1 (ksi) (t1)	S1 (ksi) (t2)
1:	1:	1444.00	6.13:	-6.13:	0.00:	0.00:
2:	1:	1765.00	4.43:	-4.43:	0.00:	0.00:
3:	1:	11234.00	3.20:	-3.20:	0.00:	0.00:
4:	1:	31937.00	2.29:	-2.29:	0.00:	0.00:
5:	1:	90836.00	1.64:	-1.64:	0.00:	0.00:
6:	1:	123736.00	1.21:	-1.21:	0.00:	0.00:
7:	1:	160648.00	0.86:	-0.86:	0.00:	0.00:
8:	1:	1184080.00	0.71:	-0.71:	0.00:	0.00:

Environmental Crack Growth Check for Sustained Stresses
(Kmax less than Keac): NOT SET

Lower Support Ring Outer chord Flange STA
MODEL: SC01

FATIGUE SCHEDULE BLOCK STRESS TABLE

Lower Support Ring flange STA

S T E P	M: A: T: L:	NUMBER OF FATIGUE CYCLES	S0 (ksi) (t1)	S0 (ksi) (t2)	S1 (ksi) (t1)	S1 (ksi) (t2)
1:	1:	17832.00	7.77:	-7.77:	0.00:	0.00:
2:	1:	594.00	7.77:	-7.77:	0.00:	0.00:
3:	1:	1069920.00	2.38:	-2.38:	0.00:	0.00:
4:	1:	30.00	7.77:	-7.77:	0.00:	0.00:
5:	1:	17832.00	7.77:	-7.77:	0.00:	0.00:

Environmental Crack Growth Check for Sustained Stresses
(Kmax less than Keac): NOT SET

Lower Support Ring Outer chord Flange STA
MODEL: SC01

FATIGUE SCHEDULE BLOCK STRESS TABLE

Lower Support Ring flange STA

S T E P	M: A: T: L:	NUMBER OF FATIGUE CYCLES	S0 (ksi) (t1)	S0 (ksi) (t2)	S1 (ksi) (t1)	S1 (ksi) (t2)
1:	1:	121.00	22.57:	-22.57:	0.00:	0.00:
2:	1:	121.00	17.75:	-17.75:	0.00:	0.00:
3:	1:	121.00	23.15:	-23.15:	0.00:	0.00:

Environmental Crack Growth Check for Sustained Stresses
(Kmax less than Keac): NOT SET

Lower Support Ring Outer chord Flange STA

MODEL: SC01

FATIGUE SCHEDULE BLOCK STRESS TABLE

Lower Support Ring flange STA

STEP	MAT	NUMBER OF FATIGUE CYCLES	S0 (ksi) (t1)	S0 (ksi) (t2)	S1 (ksi) (t1)	S1 (ksi) (t2)
1:	1:	9000.00	2.16:	-2.16:	0.00:	0.00:

Environmental Crack Growth Check for Sustained Stresses
(Kmax less than Keac): NOT SET

Lower Support Ring Outer chord Flange STA
MODEL: SC01

FATIGUE SCHEDULE BLOCK STRESS TABLE

Lower Support Ring flange STA

STEP	MAT	NUMBER OF FATIGUE CYCLES	S0 (ksi) (t1)	S0 (ksi) (t2)	S1 (ksi) (t1)	S1 (ksi) (t2)
1:	1:	2.00	-21.59:	21.59:	0.00:	0.00:
2:	1:	4.00	-19.43:	19.43:	0.00:	0.00:
3:	1:	8.00	-17.28:	17.28:	0.00:	0.00:
4:	1:	15.00	-15.12:	15.12:	0.00:	0.00:
5:	1:	49.00	-12.96:	12.96:	0.00:	0.00:
6:	1:	81.00	-10.80:	10.80:	0.00:	0.00:
7:	1:	178.00	-8.64:	8.64:	0.00:	0.00:
8:	1:	641.00	-6.48:	6.48:	0.00:	0.00:
9:	1:	3120.00	-4.32:	4.32:	0.00:	0.00:
10:	1:	3405.00	-2.16:	2.16:	0.00:	0.00:
11:	1:	5019.00	-1.51:	1.51:	0.00:	0.00:
12:	1:	28853.00	-1.08:	1.08:	0.00:	0.00:
13:	1:	91655.00	-0.65:	0.65:	0.00:	0.00:

Environmental Crack Growth Check for Sustained Stresses
(Kmax less than Keac): NOT SET

Lower Support Ring Outer chord Flange STA
MODEL: SC01

FATIGUE SCHEDULE BLOCK STRESS TABLE

Lower Support Ring flange STA

STEP	MAT	NUMBER OF FATIGUE CYCLES	S0 (ksi) (t1)	S0 (ksi) (t2)	S1 (ksi) (t1)	S1 (ksi) (t2)
1:	1:	34.00	0.22:	-0.22:	0.00:	0.00:
2:	1:	34.00	0.17:	-0.17:	0.00:	0.00:
3:	1:	60.00	0.13:	-0.13:	0.00:	0.00:
4:	1:	179.00	0.09:	-0.09:	0.00:	0.00:
5:	1:	117.00	0.22:	-0.22:	0.00:	0.00:
6:	1:	414.00	0.17:	-0.17:	0.00:	0.00:
7:	1:	2404.00	0.13:	-0.13:	0.00:	0.00:
8:	1:	9789.00	0.09:	-0.09:	0.00:	0.00:
9:	1:	62675.00	0.04:	-0.04:	0.00:	0.00:

Environmental Crack Growth Check for Sustained Stresses
(Kmax less than Keac): NOT SET

Lower Support Ring Outer chord Flange STA
MODEL: SC01

ANALYSIS RESULTS:

Schedule	Block	Step	Cycles	Crack a	Crack c	Max Kmax(a)	Max Kmax(c)
0	0	0	0.00	0.25000E-01	0.25000E-01	-	-

1	1	-	1605680.00	0.25008E-01	0.25008E-01	1.13	1.26
1	2	-	3211360.00	0.25017E-01	0.25017E-01	1.13	1.26
1	3	-	4817040.00	0.25025E-01	0.25025E-01	1.13	1.26
1	4	-	6422720.00	0.25033E-01	0.25034E-01	1.13	1.26
1	5	-	7528928.00	0.25622E-01	0.25630E-01	1.45	1.62
1	6	-	8635136.00	0.26239E-01	0.26254E-01	1.47	1.64
1	7	-	9741344.00	0.26882E-01	0.26908E-01	1.49	1.66
1	8	-	10847552.00	0.27557E-01	0.27595E-01	1.51	1.68
1	9	-	10847915.00	0.27768E-01	0.27809E-01	4.50	5.03
1	10	-	10848278.00	0.27982E-01	0.28026E-01	4.52	5.05
1	11	-	10848641.00	0.28198E-01	0.28246E-01	4.54	5.07
1	12	-	10849004.00	0.28417E-01	0.28468E-01	4.56	5.09
1	13	-	10858004.00	0.28417E-01	0.28468E-01	0.425	0.474
1	14	-	10867004.00	0.28417E-01	0.28468E-01	0.425	0.474
1	15	-	10876004.00	0.28417E-01	0.28468E-01	0.425	0.474
1	16	-	10885004.00	0.28417E-01	0.28468E-01	0.425	0.474
1	17	-	11018034.00	0.28448E-01	0.28500E-01	4.25	4.74
1	18	-	11151064.00	0.28479E-01	0.28532E-01	4.25	4.75
1	19	-	11284094.00	0.28510E-01	0.28563E-01	4.25	4.75
1	20	-	11417124.00	0.28542E-01	0.28595E-01	4.25	4.75
1	21	-	11550154.00	0.28573E-01	0.28627E-01	4.26	4.75
1	22	-	11683184.00	0.28604E-01	0.28659E-01	4.26	4.76
1	23	-	11816214.00	0.28636E-01	0.28691E-01	4.26	4.76
1	24	-	11949244.00	0.28667E-01	0.28723E-01	4.26	4.76
1	25	-	12082274.00	0.28699E-01	0.28755E-01	4.27	4.77
1	26	-	12215304.00	0.28730E-01	0.28788E-01	4.27	4.77
1	27	-	12348334.00	0.28762E-01	0.28820E-01	4.27	4.77
1	28	-	12481364.00	0.28794E-01	0.28852E-01	4.27	4.77
1	29	-	12557070.00	0.28794E-01	0.28852E-01	0.436E-01	0.487E-01
1	30	-	12632776.00	0.28794E-01	0.28852E-01	0.436E-01	0.487E-01
1	31	-	12708482.00	0.28794E-01	0.28852E-01	0.436E-01	0.487E-01
1	32	-	12784188.00	0.28794E-01	0.28852E-01	0.436E-01	0.487E-01
1	32	9	12784188.00	0.28794E-01	0.28852E-01	0.855E-02	0.955E-02

FINAL RESULTS:
Critical Crack Size has NOT been reached.

at Cycle No. 62675.00
of Load Step No. 9 Description: None
of Block No. 32
of Schedule No. 1

Crack Sizes: a = 0.287938E-01 , c = 0.288522E-01 , a/c = 0.9980
Total Cycles = 12784188.

Prepared By	Name/Date M.Gutierrez / 3-9-03	LOCKHEED MARTIN	File Name Lwrring_flange.doc
Checked By	3/9/03	Science, Engineering, Analysis, & Test *Mechanical Systems Analysis Department*	Drawing No. SDG39135785
Title: **Lower Support Ring flange fracture Analysis**			

This analysis is for the Lower support ring flange at the same location as shown in page 2.1.3-2 but uses the flight spectrum. The Flight spectrum includes Truck transport, Air transport, , Launch/ Landing and On orbit and loads.

```
                    FATIGUE CRACK GROWTH ANALYSIS
                    -----------------------------
                  DATE: 08-Mar-03   TIME: 10:19:06
                  (NASGRO Version 4.02, September 2002.)
          U.S. customary units [inches, ksi, ksi sqrt(in)]

PROBLEM TITLE
-------------
Lower Support Ring Flange Flight spectrum

Crack Growth Model: Non Interaction
Ratio of growth increment to current crk size=  0.0050
Equation/Table    : NASGRO Equation

GEOMETRY
--------
MODEL: SC01-Surface crack (2D) in finite width plate.

Plate Thickness, t =     0.1490
Plate Width, W     =     1.6250

FLAW SIZE: (User specified)

a  (init.) =  0.2500E-01
c   (init.) =  0.2500E-01
a/c (init.) =   1.000




MATERIAL
--------

MATL 1:   1000-9000 SERIES AL [**Manual data input**]
          7000 series

Material Header Info.:

Material  1 Data ID: M7GK21AB1
Alloy Description :   7050-T7452

Alloy Cond/HT :    Forged; L-T; LA; Room temp

Product Form :

Environment :

Specimen Type :
Specimen Orientation :
Specimen Thickness :
Specimen Width :
Specimen Test Frequency :
Data Reference :

Material Properties:

:Matl:  UTS :  YS  :  K1e :  K1c :  Ak :  Bk :  Thk  :  Kc  : Keac :
: No.:      :      :      :      :     :     :       :      :      :
:----:------:------:------:------:-----:-----:-------:------:------:
:  1 : 65.0:  51.0:  41.0:  31.0: 1.00: 2.00:  0.149:  91.4:      :

:Matl:--------------- Crack Growth Eqn Constants ------------------:
: No.:    C    :  n  :  p :  q :  DK1 : Cth+ :Alpha:Smax/:
:    :         :     :    :    :      :      :     :SIGo :
:----:---------:-----:----:----:------:------:-----:-----:
:  1 :0.200D-07:3.000:0.50:0.50:  0.70:  2.50: 2.00: 0.30:
| Material ultimate and yield strength UTS and YS changed as per
MIL-HDBK-5H, table 3.7.3.0 (d), thickness 6.0 to 7.0 in.)


Small crack threshold parameters:
a0 =     0.00150
```

```
Limit of ratio DKth(S)/DKth(L) =     0.20


Cth+ = 0, Cth- = 0 are used at start only
Lower Support Ring STA spectrum
MODEL: SC01

FATIGUE SPECTRUM
----------------
Lower Ring Flange Flight VC spectrum

[Note: Stress = Input Value * Scale Factor]

Stress Scaling Factors for Block Case:  1          TRUCK2-VC


Scale Factor for Stress S0:   0.21594
Scale Factor for Stress S1:    0.0000

Stress Scaling Factors for Block Case:  2          AIR2-VC


Scale Factor for Stress S0:   0.21594
Scale Factor for Stress S1:    0.0000

Stress Scaling Factors for Block Case:  3          GSFC


Scale Factor for Stress S0:   0.21594
Scale Factor for Stress S1:    0.0000

Stress Scaling Factors for Block Case:  4          ONORBIT2-VCMGNET


Scale Factor for Stress S0:   0.21594
Scale Factor for Stress S1:    0.0000

Schedule info. was input manually

Total No. of Blocks in Schedule =     24

   Block Number and Case Correspondences
 Block Number                  Block Case No.
From   -   To
    1   -      4                        1
    5   -      8                        2
    9   -     20                        3
   21   -     24                        4

Stresses: Tension, bending or pin

--------------------------------

Lower Support Ring STA spectrum
MODEL: SC01

FATIGUE SCHEDULE BLOCK INPUT TABLE
----------------------------------
Lower Ring Flange Flight VC spectrum

BLOCK CASE NO.  1          TRUCK2-VC

 S  : M:  NUMBER     :        S0          :        S1          :
 T  : A:    OF       :                    :                    :
 E  : T:  FATIGUE    :                    :                    :
 P  : L:  CYCLES     :    (t1) :  (t2)    :    (t1) :  (t2)    :
----:--:-------------:---------:---------:---------:---------:
   1: 1:     3081.00 :    28.40:   -28.40:    28.40:   -28.40:
   2: 1:     3766.00 :    20.50:   -20.50:    20.50:   -20.50:
   3: 1:    23966.00 :    14.80:   -14.80:    14.80:   -14.80:
   4: 1:    68133.00 :    10.60:   -10.60:    10.60:   -10.60:
   5: 1:   193784.00 :     7.60:    -7.60:     7.60:    -7.60:
   6: 1:   263971.00 :     5.60:    -5.60:     5.60:    -5.60:
   7: 1:   342717.00 :     4.00:    -4.00:     4.00:    -4.00:
   8: 1:  2526038.00 :     3.30:    -3.30:     3.30:    -3.30:

Environmental Crack Growth Check for Sustained Stresses
(Kmax less than Keac):  NOT SET
                        -------
```

BLOCK CASE NO. 2 **AIR2-VC**

S T E P	M: A: T: L:	NUMBER OF FATIGUE CYCLES	S0 (t1)	S0 (t2)	S1 (t1)	S1 (t2)
1:	1:	26748.00	36.00:	-36.00:	36.00:	-36.00:
2:	1:	892.00	36.00:	-36.00:	36.00:	-36.00:
3:	1:	1230408.00	11.00:	-11.00:	11.40:	-11.40:
4:	1:	45.00	36.00:	-36.00:	36.00:	-36.00:
5:	1:	26748.00	36.00:	-36.00:	36.00:	-36.00:

Environmental Crack Growth Check for Sustained Stresses
(Kmax less than Keac): NOT SET

BLOCK CASE NO. 3 **GSFC**

S T E P	M: A: T: L:	NUMBER OF FATIGUE CYCLES	S0 (t1)	S0 (t2)	S1 (t1)	S1 (t2)
1:	1:	2.00	-100.00:	100.00:	-100.00:	100.00:
2:	1:	4.00	-90.00:	90.00:	-90.00:	90.00:
3:	1:	8.00	-80.00:	80.00:	-80.00:	80.00:
4:	1:	15.00	-70.00:	70.00:	-70.00:	70.00:
5:	1:	49.00	-60.00:	60.00:	-60.00:	60.00:
6:	1:	81.00	-50.00:	50.00:	-50.00:	50.00:
7:	1:	178.00	-40.00:	40.00:	-40.00:	40.00:
8:	1:	641.00	-30.00:	30.00:	-30.00:	30.00:
9:	1:	3120.00	-20.00:	20.00:	-20.00:	20.00:
10:	1:	3405.00	-10.00:	10.00:	-10.00:	10.00:
11:	1:	5019.00	-7.00:	7.00:	-7.00:	7.00:
12:	1:	28853.00	-5.00:	5.00:	-5.00:	5.00:
13:	1:	91655.00	-3.00:	3.00:	-3.00:	3.00:

Environmental Crack Growth Check for Sustained Stresses
(Kmax less than Keac): NOT SET

BLOCK CASE NO. 4 **ONORBIT2-VCMGNET**

S T E P	M: A: T: L:	NUMBER OF FATIGUE CYCLES	S0 (t1)	S0 (t2)	S1 (t1)	S1 (t2)
1:	1:	34.00	14.10:	8.50:	14.10:	8.50:
2:	1:	34.00	13.90:	8.50:	13.90:	8.50:
3:	1:	60.00	13.70:	8.50:	13.70:	8.50:
4:	1:	179.00	13.50:	8.50:	13.50:	8.50:
5:	1:	117.00	14.10:	8.50:	14.10:	8.50:
6:	1:	414.00	13.90:	8.50:	13.90:	8.50:
7:	1:	2404.00	13.70:	8.50:	13.70:	8.50:
8:	1:	9789.00	13.50:	8.50:	13.50:	8.50:
9:	1:	62675.00	13.40:	8.50:	13.40:	8.50:

Environmental Crack Growth Check for Sustained Stresses
(Kmax less than Keac): NOT SET

Lower Support Ring STA spectrum
MODEL: SC01

FATIGUE SCHEDULE BLOCK STRESS TABLE

Lower Ring Flange Flight VC spectrum

S T E P	M: A: T: L:	NUMBER OF FATIGUE CYCLES	S0 (ksi) (t1)	S0 (ksi) (t2)	S1 (ksi) (t1)	S1 (ksi) (t2)
1:	1:	3081.00	6.13:	-6.13:	0.00:	0.00:
2:	1:	3766.00	4.43:	-4.43:	0.00:	0.00:
3:	1:	23966.00	3.20:	-3.20:	0.00:	0.00:
4:	1:	68133.00	2.29:	-2.29:	0.00:	0.00:

5:	1:	193784.00	1.64:	-1.64:	0.00:	0.00:
6:	1:	263971.00	1.21:	-1.21:	0.00:	0.00:
7:	1:	342717.00	0.86:	-0.86:	0.00:	0.00:
8:	1:	2526038.00	0.71:	-0.71:	0.00:	0.00:

Environmental Crack Growth Check for Sustained Stresses
(Kmax less than Keac): NOT SET

Lower Support Ring STA spectrum
MODEL: SC01

FATIGUE SCHEDULE BLOCK STRESS TABLE

Lower Ring Flange Flight VC spectrum

S T E P	M: A: T: L:	NUMBER OF FATIGUE CYCLES	S0 (ksi) (t1)	S0 (ksi) (t2)	S1 (ksi) (t1)	S1 (ksi) (t2)
1:	1:	26748.00	7.77:	-7.77:	0.00:	0.00:
2:	1:	892.00	7.77:	-7.77:	0.00:	0.00:
3:	1:	1230408.00	2.38:	-2.38:	0.00:	0.00:
4:	1:	45.00	7.77:	-7.77:	0.00:	0.00:
5:	1:	26748.00	7.77:	-7.77:	0.00:	0.00:

Environmental Crack Growth Check for Sustained Stresses
(Kmax less than Keac): NOT SET

Lower Support Ring STA spectrum
MODEL: SC01

FATIGUE SCHEDULE BLOCK STRESS TABLE

Lower Ring Flange Flight VC spectrum

S T E P	M: A: T: L:	NUMBER OF FATIGUE CYCLES	S0 (ksi) (t1)	S0 (ksi) (t2)	S1 (ksi) (t1)	S1 (ksi) (t2)
1:	1:	2.00	-21.59:	21.59:	0.00:	0.00:
2:	1:	4.00	-19.43:	19.43:	0.00:	0.00:
3:	1:	8.00	-17.28:	17.28:	0.00:	0.00:
4:	1:	15.00	-15.12:	15.12:	0.00:	0.00:
5:	1:	49.00	-12.96:	12.96:	0.00:	0.00:
6:	1:	81.00	-10.80:	10.80:	0.00:	0.00:
7:	1:	178.00	-8.64:	8.64:	0.00:	0.00:
8:	1:	641.00	-6.48:	6.48:	0.00:	0.00:
9:	1:	3120.00	-4.32:	4.32:	0.00:	0.00:
10:	1:	3405.00	-2.16:	2.16:	0.00:	0.00:
11:	1:	5019.00	-1.51:	1.51:	0.00:	0.00:
12:	1:	26853.00	-1.08:	1.08:	0.00:	0.00:
13:	1:	91655.00	-0.65:	0.65:	0.00:	0.00:

Environmental Crack Growth Check for Sustained Stresses
(Kmax less than Keac): NOT SET

Lower Support Ring STA spectrum
MODEL: SC01

FATIGUE SCHEDULE BLOCK STRESS TABLE

Lower Ring Flange Flight VC spectrum

S T E P	M: A: T: L:	NUMBER OF FATIGUE CYCLES	S0 (ksi) (t1)	S0 (ksi) (t2)	S1 (ksi) (t1)	S1 (ksi) (t2)
1:	1:	34.00	3.04:	1.84:	0.00:	0.00:
2:	1:	34.00	3.00:	1.84:	0.00:	0.00:
3:	1:	60.00	2.96:	1.84:	0.00:	0.00:
4:	1:	179.00	2.92:	1.84:	0.00:	0.00:
5:	1:	117.00	3.04:	1.84:	0.00:	0.00:
6:	1:	414.00	3.00:	1.84:	0.00:	0.00:
7:	1:	2404.00	2.96:	1.84:	0.00:	0.00:
8:	1:	9789.00	2.92:	1.84:	0.00:	0.00:
9:	1:	62675.00	2.89:	1.84:	0.00:	0.00:

Prepared By	Name/Date M.Gutierrez / 3-9-03	LOCKHEED MARTIN Science, Engineering, Analysis, & Test *Mechanical Systems Analysis Department*	File Name Lwrring_flange.doc
Checked By	3/9/03		Drawing No. SDG39135785

Title: **Lower Support Ring flange fracture Analysis**

Environmental Crack Growth Check for Sustained Stresses
(Kmax less than Keac): NOT SET

Lower Support Ring STA spectrum
MODEL: SC01

ANALYSIS RESULTS:

Schedule	Block	Step	Cycles	Crack a	Crack c	Max Kmax(a)	Max Kmax(c)
0	0	0	0.00	0.25000E-01	0.25000E-01	-	-
1	1	-	3425456.00	0.25018E-01	0.25018E-01	1.13	1.26
1	2	-	6850912.00	0.25035E-01	0.25036E-01	1.13	1.26
1	3	-	10276368.00	0.25053E-01	0.25054E-01	1.13	1.26
1	4	-	13701824.00	0.25071E-01	0.25072E-01	1.13	1.26
1	5	-	14986665.00	0.25967E-01	0.25979E-01	1.46	1.63
1	6	-	16271506.00	0.26925E-01	0.26952E-01	1.49	1.66
1	7	-	17556347.00	0.27953E-01	0.27997E-01	1.52	1.69
1	8	-	18841188.00	0.29057E-01	0.29123E-01	1.54	1.73
1	9	-	18974218.00	0.29090E-01	0.29156E-01	4.30	4.80
1	10	-	19107248.00	0.29122E-01	0.29189E-01	4.30	4.80
1	11	-	19240278.00	0.29154E-01	0.29222E-01	4.30	4.80
1	12	-	19373308.00	0.29187E-01	0.29256E-01	4.30	4.81
1	13	-	19506338.00	0.29219E-01	0.29289E-01	4.31	4.81
1	14	-	19639368.00	0.29252E-01	0.29322E-01	4.31	4.81
1	15	-	19772398.00	0.29285E-01	0.29356E-01	4.31	4.82
1	16	-	19905428.00	0.29318E-01	0.29389E-01	4.31	4.82
1	17	-	20038458.00	0.29350E-01	0.29422E-01	4.32	4.82
1	18	-	20171488.00	0.29383E-01	0.29456E-01	4.32	4.82
1	19	-	20304518.00	0.29416E-01	0.29490E-01	4.32	4.83
1	20	-	20437548.00	0.29449E-01	0.29523E-01	4.32	4.83
1	21	-	20513254.00	0.29449E-01	0.29523E-01	0.610	0.681
1	22	-	20588960.00	0.29449E-01	0.29523E-01	0.610	0.681
1	23	-	20664666.00	0.29449E-01	0.29523E-01	0.610	0.681
1	24	-	20740372.00	0.29449E-01	0.29523E-01	0.610	0.681
1	24	9	20740372.00	0.29449E-01	0.29523E-01	0.580	0.648

FINAL RESULTS:
Critical Crack Size has NOT been reached.

at Cycle No. 62675.00
of Load Step No. 9 Description: None
of Block No. 24
of Schedule No. 1

Crack Sizes: a = 0.294492E-01 , c = 0.295234E-01 , a/c = 0.9975
Total Cycles = 20740372.

Sect 2.2.1 USS-02 FRICTION STIR WELDED TUBES FRACTURE ANALYSIS

Prepared By	Name/Date C. Bala / 3-6-03	**LOCKHEED MARTIN** Science, Engineering, Analysis, & Test *Mechanical Systems Analysis Department*	FSW-fract.doc
Checked By	4/7/03		Drawing No. SDG39135728,5735,5764
Title: USS-02 Friction Stir welded tubes Fracture Analysis			

SC01

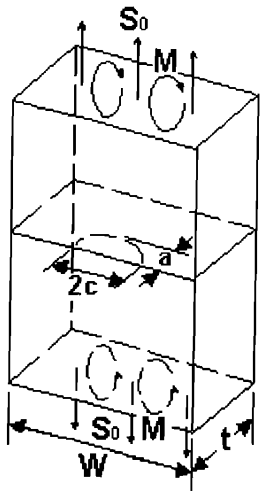

$$S_1 = \frac{6M}{Wt^2}$$

$$0 < \frac{2c}{W} \leq 1$$

$$0.1 \leq \frac{a}{c} \leq 1.2$$

Upper Trunnion Bridge

Material	7050-T7451
NASA/FLAGRO Crack type	SC01
Section Properties:	
Plate thickness t	0.250 in
Plate width w	6.292 in
Crack Properties:	a = 0.10 in c = 0.10 in
Stress:	S0 = 24.537 ksi (ref. Sect 1.2.1.4 , page 25)

The material data is used from the NASGRO library material data ID M7GJ11AB1, 7050-T7451 except the Ftu and Fty which are changed to match the weld allowables (ref. Sect 1.2.1.4, page 10)

The spectrum for the fracture analysis is obtained from the AMS-02 Structural Verification Plan JSC 28792 Rev. C sect 8. The spectrum includes Truck transport, Air transport, On orbit and Launch/ Landing loads.
The truck, air and on orbit loads are run for one mission and the Launch/landing for 3 missions.
The results show that the crack growth is stable

Prepared By	Name/Date C. Bala / 3-6-03	**LOCKHEED MARTIN** Science, Engineering, Analysis, & Test *Mechanical Systems Analysis Department*	FSW-fract.doc
Checked By	4/7/03		Drawing No. SDG39135728,5735,5764
Title: USS-02 Friction Stir welded tubes Fracture Analysis			

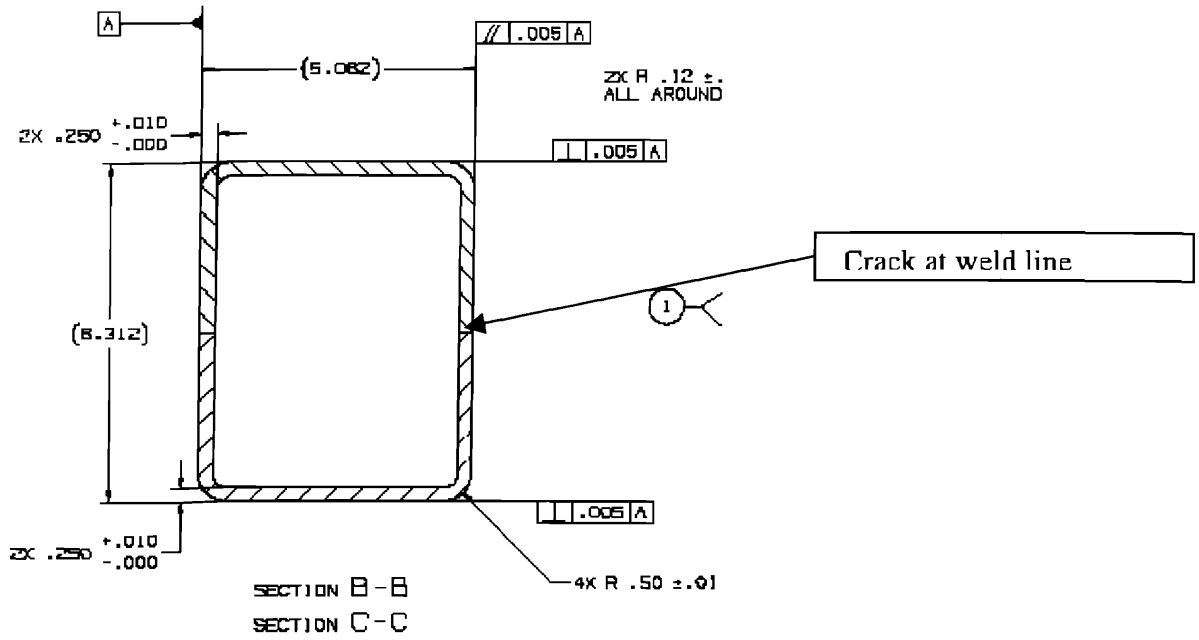

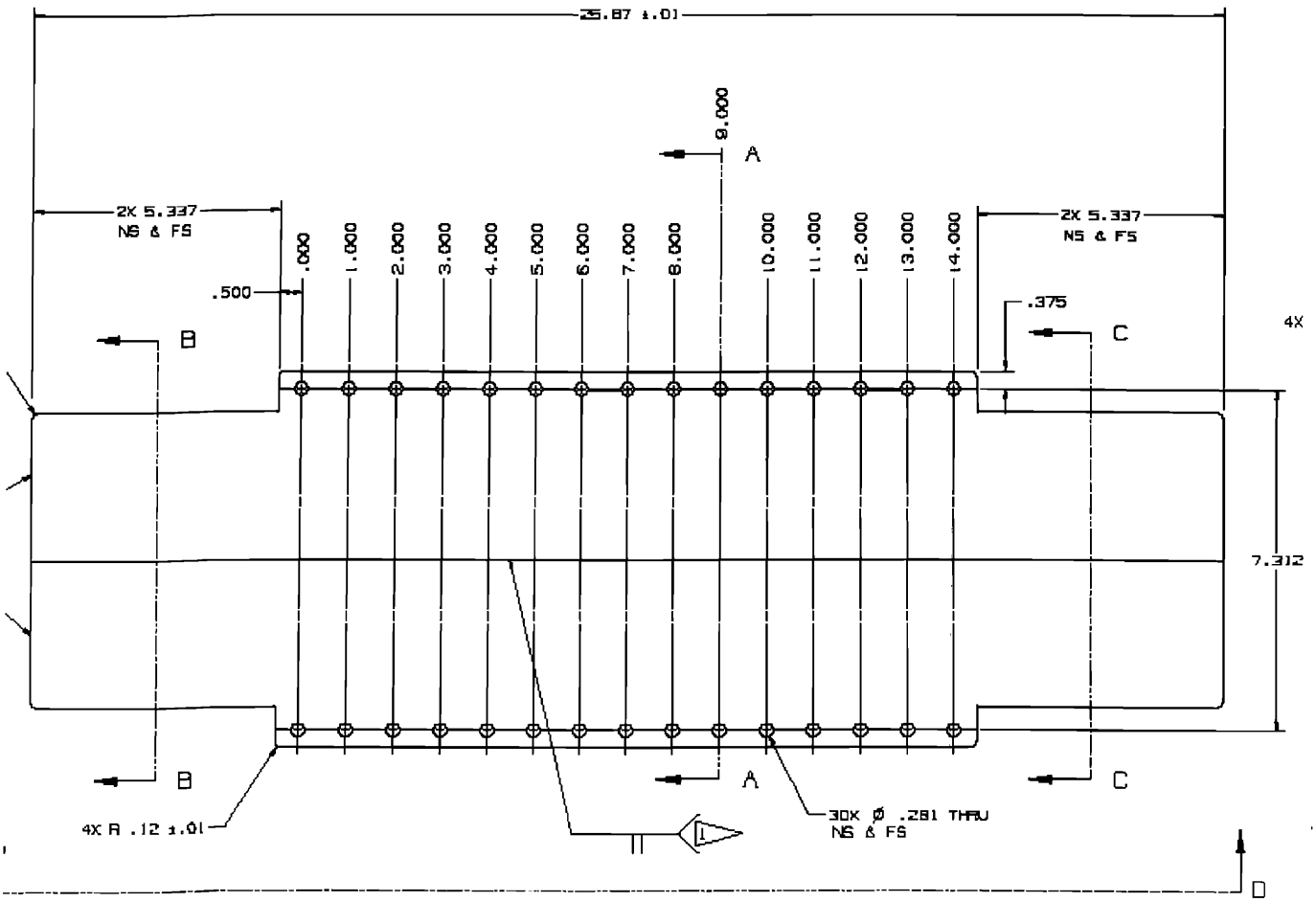

FATIGUE CRACK GROWTH ANALYSIS

DATE: 08/06/02 TIME: 08:03:42
(computed: NASGRO Version 3.0.4, Jan 2000.)
U.S. customary units [inches, ksi, ksi sqrt(in)]

PROBLEM TITLE

USS-02 Upper Trunnion Bridge 6-02a loads

Crack Growth Model: Non Interaction
Equation/Table : NASGRO Equation

GEOMETRY

MODEL: SC01-Surface crack (2D) in finite width plate.

Plate Thickness, t = 0.2500
Plate Width, W = 6.2920

FLAW SIZE: (User specified)

a (init.) = 0.1000
c (init.) = 0.1000
a/c (init.) = 1.000

MATERIAL

MATL 1: Edited file data -2211
-2221
Material Header Info.:

Material 1 Data ID: M7GJ11AB1
Alloy Description : 7050-T73651 & T7451 -26
11
Alloy Cond/HT : Plt & Sht; L-T; LA & HHA
-2621
Product Form : -2631

Environment : -2641

Specimen Type :
Specimen Orientation :
Specimen Thickness :
Specimen Width :
Specimen Test Frequency :
Data Reference :

Material Properties:

Matl No.	UTS	YS	K1e	K1c	Ak	Bk	Thk	Kc	Keac
1	**66.1**	**56.1**	43.0	31.0	1.00	1.00	0.250	58.8	

Matl No.	Crack Growth Eqn Constants C	n	p	q	DKo	Cth+	Cth-	Rel	Alpha	Smax/SIGo
1	0.426D-07	2.379	0.50	1.00	2.40	1.50	0.10	0.70	1.90	0.30

(Ref. Friction stir weld allowable from test data)

USS-02 Upper Trunnion Bridge
MODEL: SC01

FATIGUE SCHEDULE BLOCK INPUT TABLE

USS-02 Spectrum

[Note: Stress = Input Value * Scale Factor]

Stress Scaling Factors for Block Case: 1 **|TRUCK4-USS)**

Scale Factor for Stress S0: 0.24537
Scale Factor for Stress S1: 0.0000

Stress Scaling Factors for Block Case: 2 **|AIR4-USS)**

Scale Factor for Stress S0: 0.24537
Scale Factor for Stress S1: 0.0000

Stress Scaling Factors for Block Case: 3 **|ONORBIT1-STA)**

Scale Factor for Stress S0: 0.24537
Scale Factor for Stress S1: 0.0000

Stress Scaling Factors for Block Case: 4 **|GSFC)**

Scale Factor for Stress S0: 0.24537
Scale Factor for Stress S1: 0.0000

Schedule info. was input manually

Total No. of Blocks in Schedule = 52

Block Number and Case Correspondences

Block Number From	-	To	Block Case No.
1	-	4	1
5	-	8	2
9	-	12	3
13	-	52	4

Stresses: Tension, bending or pin

USS-02 Upper Trunnion Bridge
MODEL: SC01

FATIGUE SCHEDULE BLOCK INPUT TABLE

USS-02 Spectrum

BLOCK CASE NO. 1

S T E P	M: A: T: L:	NUMBER OF FATIGUE CYCLES	S0 (t1)	S0 (t2)	S1 (t1)	S1 (t2)
1:	1:	1878.00	28.40:	-28.40:	28.40:	-28.40:
2:	1:	2295.00	20.50:	-20.50:	20.50:	-20.50:
3:	1:	14604.00	14.80:	-14.80:	14.80:	-14.80:

4:	1:	41518.00 :	10.60:	-10.60:	10.60:	-10.60:
5:	1:	118087.00 :	7.60:	-7.60:	7.60:	-7.60:
6:	1:	160857.00 :	5.60:	-5.60:	5.60:	-5.60:
7:	1:	208843.00 :	4.00:	-4.00:	4.00:	-4.00:
8:	1:	1539305.00 :	3.30:	-3.30:	3.30:	-3.30:

Environmental Crack Growth Check for Sustained Stresses
(Kmax less than Keac): NOT SET

BLOCK CASE NO. 2

S T E P	M: A: T: L:	NUMBER OF FATIGUE CYCLES	S0 (t1)	S0 (t2)	S1 (t1)	S1 (t2)
1:	1:	17832.00 :	36.00:	-36.00:	36.00:	-36.00:
2:	1:	594.00 :	36.00:	-36.00:	36.00:	-36.00:
3:	1:	1069920.00 :	11.00:	-11.00:	11.40:	-11.40:
4:	1:	30.00 :	36.00:	-36.00:	36.00:	-36.00:
5:	1:	17832.00 :	36.00:	-36.00:	36.00:	-36.00:

Environmental Crack Growth Check for Sustained Stresses
(Kmax less than Keac): NOT SET

BLOCK CASE NO. 3

S T E P	M: A: T: L:	NUMBER OF FATIGUE CYCLES	S0 (t1)	S0 (t2)	S1 (t1)	S1 (t2)
1:	1:	34.00 :	1.02:	-1.02:	1.02:	-1.02:
2:	1:	34.00 :	0.81:	-0.81:	0.81:	-0.81:
3:	1:	60.00 :	0.61:	-0.61:	0.61:	-0.61:
4:	1:	179.00 :	0.41:	-0.41:	0.41:	-0.41:
5:	1:	117.00 :	1.02:	-1.02:	1.02:	-1.02:
6:	1:	414.00 :	0.81:	-0.81:	0.81:	-0.81:
7:	1:	2404.00 :	0.61:	-0.61:	0.61:	-0.61:
8:	1:	9789.00 :	0.41:	-0.41:	0.41:	-0.41:
9:	1:	62675.00 :	0.20:	-0.20:	0.20:	-0.20:

Environmental Crack Growth Check for Sustained Stresses
(Kmax less than Keac): NOT SET

BLOCK CASE NO. 4

S T E P	M: A: T: L:	NUMBER OF FATIGUE CYCLES	S0 (t1)	S0 (t2)	S1 (t1)	S1 (t2)
1:	1:	2.00 :	-100.00:	100.00:	-100.00:	100.00:
2:	1:	4.00 :	-90.00:	90.00:	-90.00:	90.00:
3:	1:	8.00 :	-80.00:	80.00:	-80.00:	80.00:
4:	1:	15.00 :	-70.00:	70.00:	-70.00:	70.00:
5:	1:	49.00 :	-60.00:	60.00:	-60.00:	60.00:
6:	1:	81.00 :	-50.00:	50.00:	-50.00:	50.00:
7:	1:	178.00 :	-40.00:	40.00:	-40.00:	40.00:
8:	1:	641.00 :	-30.00:	30.00:	-30.00:	30.00:

9:	1:	3120.00 :	-20.00:	20.00:	-20.00:	20.00:
10:	1:	3405.00 :	-10.00:	10.00:	-10.00:	10.00:
11:	1:	5019.00 :	-7.00:	7.00:	-7.00:	7.00:
12:	1:	28853.00 :	-5.00:	5.00:	-5.00:	5.00:
13:	1:	91655.00 :	-3.00:	3.00:	-3.00:	3.00:

Environmental Crack Growth Check for Sustained Stresses
(Kmax less than Keac): NOT SET

USS-02 Upper Trunnion Bridge
MODEL: SC01

FATIGUE SCHEDULE BLOCK STRESS TABLE

USS-02 Spectrum

S T E P	M: A: T: L:	NUMBER OF FATIGUE CYCLES	S0 (ksi) (t1)	S0 (ksi) (t2)	S1 (ksi) (t1)	S1 (ksi) (t2)
1:	1:	1878.00 :	6.97:	-6.97:	0.00:	0.00:
2:	1:	2295.00 :	5.03:	-5.03:	0.00:	0.00:
3:	1:	14604.00 :	3.63:	-3.63:	0.00:	0.00:
4:	1:	41518.00 :	2.60:	-2.60:	0.00:	0.00:
5:	1:	118087.00 :	1.86:	-1.86:	0.00:	0.00:
6:	1:	160857.00 :	1.37:	-1.37:	0.00:	0.00:
7:	1:	208843.00 :	0.98:	-0.98:	0.00:	0.00:
8:	1:	1539305.00 :	0.81:	-0.81:	0.00:	0.00:

Environmental Crack Growth Check for Sustained Stresses
(Kmax less than Keac): NOT SET

USS-02 Upper Trunnion Bridge
MODEL: SC01

FATIGUE SCHEDULE BLOCK STRESS TABLE

USS-02 Spectrum

S T E P	M: A: T: L:	NUMBER OF FATIGUE CYCLES	S0 (ksi) (t1)	S0 (ksi) (t2)	S1 (ksi) (t1)	S1 (ksi) (t2)
1:	1:	17832.00 :	8.83:	-8.83:	0.00:	0.00:
2:	1:	594.00 :	8.83:	-8.83:	0.00:	0.00:
3:	1:	1069920.00 :	2.70:	-2.70:	0.00:	0.00:
4:	1:	30.00 :	8.83:	-8.83:	0.00:	0.00:
5:	1:	17832.00 :	8.83:	-8.83:	0.00:	0.00:

Environmental Crack Growth Check for Sustained Stresses
(Kmax less than Keac): NOT SET

USS-02 Upper Trunnion Bridge
MODEL: SC01

FATIGUE SCHEDULE BLOCK STRESS TABLE

USS-02 Spectrum

S T	M: A:	NUMBER OF	S0	S1

E P	T: L:	FATIGUE CYCLES	(ksi) (t1)	(t2)	(ksi) (t1)	(t2)
1:	1:	34.00	0.25:	-0.25:	0.00:	0.00:
2:	1:	34.00	0.20:	-0.20:	0.00:	0.00:
3:	1:	60.00	0.15:	-0.15:	0.00:	0.00:
4:	1:	179.00	0.10:	-0.10:	0.00:	0.00:
5:	1:	117.00	0.25:	-0.25:	0.00:	0.00:
6:	1:	414.00	0.20:	-0.20:	0.00:	0.00:
7:	1:	2404.00	0.15:	-0.15:	0.00:	0.00:
8:	1:	9789.00	0.10:	-0.10:	0.00:	0.00:
9:	1:	62675.00	0.05:	-0.05:	0.00:	0.00:

Environmental Crack Growth Check for Sustained Stresses
(Kmax less than Keac): NOT SET

USS-02 Upper Trunnion Bridge
MODEL: SC01

FATIGUE SCHEDULE BLOCK STRESS TABLE

USS-02 Spectrum

S T E P	M: A: T: L:	NUMBER OF FATIGUE CYCLES	S0 (ksi) (t1)	(t2)	S1 (ksi) (t1)	(t2)
1:	1:	2.00	-24.54:	24.54:	0.00:	0.00:
2:	1:	4.00	-22.08:	22.08:	0.00:	0.00:
3:	1:	8.00	-19.63:	19.63:	0.00:	0.00:
4:	1:	15.00	-17.18:	17.18:	0.00:	0.00:
5:	1:	49.00	-14.72:	14.72:	0.00:	0.00:
6:	1:	81.00	-12.27:	12.27:	0.00:	0.00:
7:	1:	178.00	-9.81:	9.81:	0.00:	0.00:
8:	1:	641.00	-7.36:	7.36:	0.00:	0.00:
9:	1:	3120.00	-4.91:	4.91:	0.00:	0.00:
10:	1:	3405.00	-2.45:	2.45:	0.00:	0.00:
11:	1:	5019.00	-1.72:	1.72:	0.00:	0.00:
12:	1:	28853.00	-1.23:	1.23:	0.00:	0.00:
13:	1:	91655.00	-0.74:	0.74:	0.00:	0.00:

Environmental Crack Growth Check for Sustained Stresses
(Kmax less than Keac): NOT SET

USS-02 Upper Trunnion Bridge
MODEL: SC01

ANALYSIS RESULTS:

Schdl	Block Step	Cycles	Final Flaw Size a	c	K max a-tip	c-tip	
1	1	2087387.	0.10020	0.10023	2.617	2.991	t
1	2	4174774.	0.10041	0.10045	2.620	2.995	t
1	3	6262161.	0.10061	0.10068	2.623	2.998	t
1	4	8349548.	0.10082	0.10091	2.626	3.002	t
1	5	9455756.	0.11088	0.11197	3.520	4.035	
1	6	10561964.	0.12298	0.12539	3.745	4.315	
1	7	11668172.	0.13774	0.14205	4.010	4.659	

1	8	12774380.	0.15608	0.16341	4.338	5.113
1	9	12850086.	0.15608	0.16341	0.123	0.145 t
1	10	12925792.	0.15608	0.16341	0.123	0.145 t
1	11	13001498.	0.15608	0.16341	0.123	0.145 t
1	12	13077204.	0.15608	0.16341	0.123	0.145 t
1	13	13210234.	0.15705	0.16459	12.044	14.193 t
1	14	13343264.	0.15803	0.16578	12.092	14.261 t
1	15	13476294.	0.15903	0.16700	12.141	14.330 t
1	16	13609324.	0.16004	0.16823	12.190	14.400 t
1	17	13742354.	0.16106	0.16949	12.240	14.471 t
1	18	13875384.	0.16210	0.17077	12.291	14.544 t
1	19	14008414.	0.16315	0.17206	12.342	14.617 t
1	20	14141444.	0.16422	0.17338	12.394	14.692 t
1	21	14274474.	0.16530	0.17472	12.446	14.769 t
1	22	14407504.	0.16639	0.17608	12.500	14.846 t
1	23	14540534.	0.16750	0.17747	12.554	14.925 t
1	24	14673564.	0.16863	0.17887	12.609	15.006 t
1	25	14806594.	0.16978	0.18031	12.664	15.087 t
1	26	14939624.	0.17094	0.18176	12.720	15.171 t
1	27	15072654.	0.17211	0.18325	12.777	15.255 t
1	28	15205684.	0.17331	0.18476	12.835	15.342 t
1	29	15338714.	0.17452	0.18629	12.894	15.430 t
1	30	15471744.	0.17575	0.18786	12.953	15.519 t
1	31	15604774.	0.17700	0.18945	13.013	15.610 t
1	32	15737804.	0.17827	0.19107	13.074	15.703 t
1	33	15870834.	0.17956	0.19273	13.136	15.798 t
1	34	16003864.	0.18086	0.19441	13.199	15.895 t
1	35	16136894.	0.18219	0.19613	13.263	15.994 t
1	36	16269924.	0.18354	0.19788	13.328	16.094 t
1	37	16402954.	0.18490	0.19966	13.394	16.197 t
1	38	16535984.	0.18630	0.20148	13.461	16.301 t
1	39	16669014.	0.18771	0.20334	13.529	16.408 t
1	40	16802044.	0.18914	0.20523	13.598	16.517 t
1	41	16935074.	0.19060	0.20717	13.668	16.629 t
1	42	17068104.	0.19208	0.20914	13.739	16.743 t
1	43	17201134.	0.19359	0.21116	13.811	16.859 t
1	44	17334164.	0.19512	0.21322	13.885	16.978 t
1	45	17467194.	0.19668	0.21532	13.959	17.100 t
1	46	17600224.	0.19826	0.21747	14.036	17.224 t
1	47	17733254.	0.19987	0.21967	14.113	17.351 t
1	48	17866284.	0.20151	0.22192	14.192	17.482 t
1	49	17999314.	0.20318	0.22422	14.272	17.615 t
1	50	18132344.	0.20488	0.22657	14.354	17.751 t
1	51	18265374.	0.20660	0.22898	14.437	17.891 t
1	52	18398404.	0.20836	0.23145	14.521	18.035 t

FINAL RESULTS:
Critical Crack Size has NOT been reached.
at Cycle No. 91655.00
of Load Step No. 13 Description: None
of Block No. 52
of Schedule No. 1
Crack Sizes: a = 0.208363 , c = 0.231453 , a/c = 0.9002
Total Cycles = 18398404.

SC01

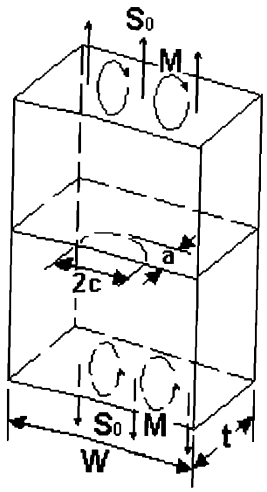

$$S_1 = \frac{6M}{Wt^2}$$

$$0 < \frac{2c}{W} \leq 1$$

$$0.1 \leq \frac{a}{c} \leq 1.2$$

Lower Trunnion Bridge

Material	7050-T7451
NASA/FLAGRO Crack type	SC01
Section Properties:	
Plate thickness t	0.250 in
Plate width w	4.918 in.
Crack Properties:	a = 0.10 in c = 0.10 in
Stress:	S0 = 22.312 ksi (ref. Sect 1.2.1.4 , page 25)

The material data is used from the NASGRO library material data ID M7GJ11AB1, 7050-T7451 except the Ftu and Fty which are changed to match the weld allowables (ref. Sect 1.2.1.4, page 10)

The spectrum for the fracture analysis is obtained from the AMS-02 Structural Verification Plan JSC 28792 Rev. C sect 8. The spectrum includes Truck transport, Air transport, On orbit and Launch/ Landing loads.
The truck, air and on orbit loads are run for one mission and the Launch/landing for 3 missions.
The results show that the crack growth is stable

Prepared By	Name/Date C. Bala / 3-6-03	**LOCKHEED MARTIN** Science, Engineering, Analysis, & Test *Mechanical Systems Analysis Department*	FSW-fract.doc
Checked By	4/7/03		Drawing No SDG39135728,5735,5764
Title: USS-02 Friction Stir welded tubes Fracture Analysis			

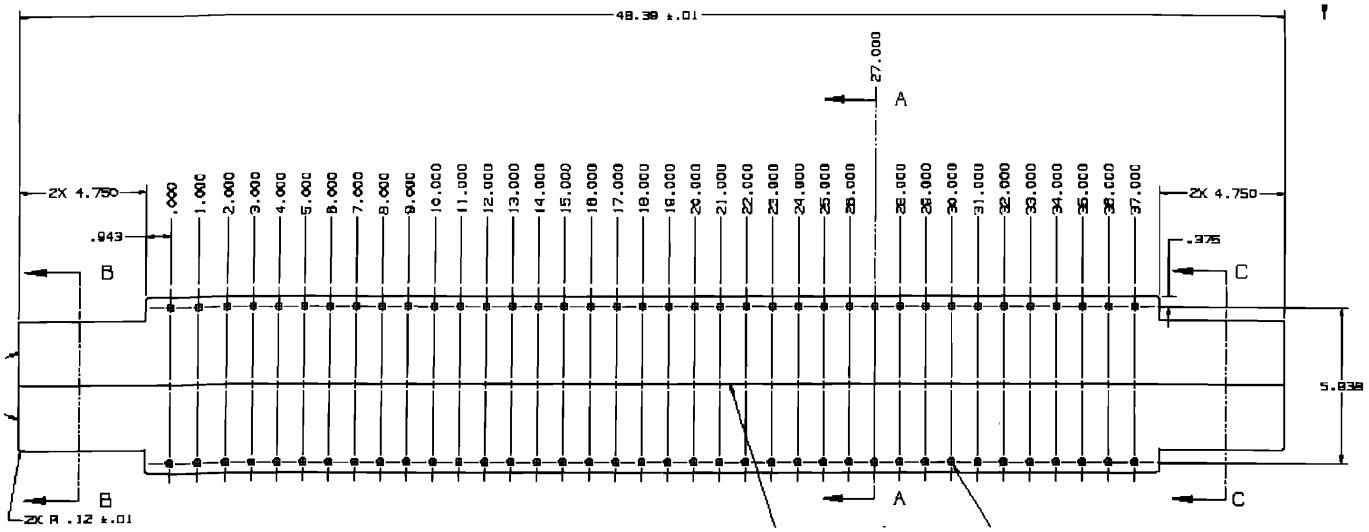

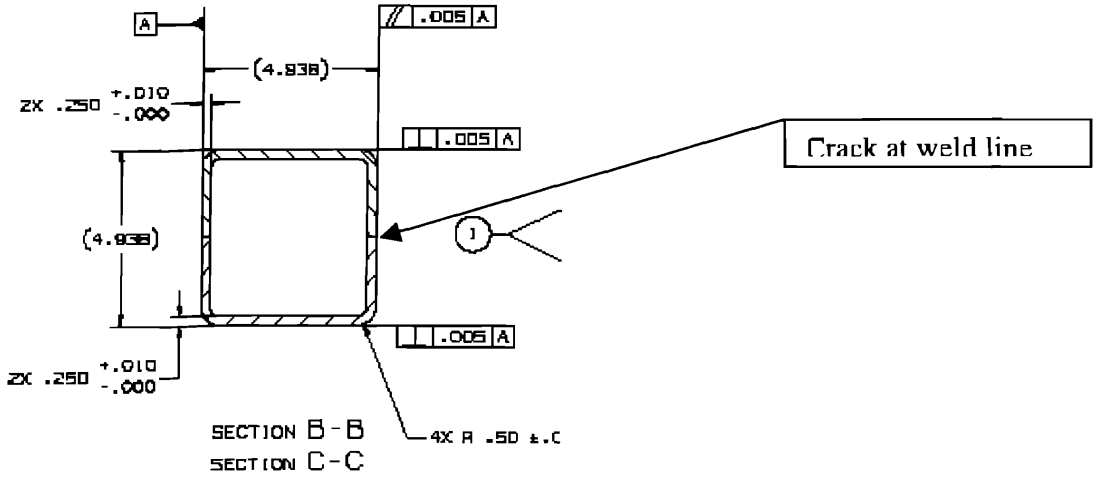

FATIGUE CRACK GROWTH ANALYSIS

DATE: 09/09/02 TIME: 13:28:31
(computed: NASGRO Version 3.0.4, Jan 2000.)
U.S. customary units [inches, ksi, ksi sqrt(in)]

PROBLEM TITLE

Lower Trunnion Bridge 6-02a loads

Crack Growth Model: Non Interaction
Equation/Table : NASGRO Equation

GEOMETRY

MODEL: SC01-Surface crack (2D) in finite width plate.

Plate Thickness, t = 0.2500
Plate Width, W = 4.9180

```
FLAW SIZE: (User specified)

a    (init.) =  0.1000
c    (init.) =  0.1000
a/c  (init.) =   1.000

MATERIAL
--------

MATL 1: Edited file data            -2211
                                    -2221

Material Header Info.:

Material  1 Data ID: M7GJ11AB1
Alloy Description :   7050-T73651 & T7451          -26
                   11
Alloy Cond/HT :       Plt & Sht; L-T; LA & HHA
                      -2621
Product Form :           -2631

Environment :          -2641

Specimen Type :
Specimen Orientation :
Specimen Thickness :
Specimen Width :
Specimen Test Frequency :
Data Reference :

Material Properties:

:Matl:  UTS  :  YS  :  K1e  :  K1c  :  Ak  :  Bk  :  Thk   :  Kc  : Keac :
: No.:       :      :       :       :      :      :        :      :      :
:----:------:------:------:------:-----:-----:-------:------:------:
:  1 :  67.0:  57.0:  43.0:  31.0: 1.00: 1.00:  0.250:  58.7:       :

:Matl:--------------- Crack Growth Eqn Constants -------------------:
: No.:    C     :  n  :  p :  q :  DKo : Cth+ :Cth- : Rcl:Alpha:Smax/:
:    :          :     :    :    :      :      :     :    :     :SIGo :
:----:---------:-----:----:----:------:------:-----:----:-----:-----:
:  1 :0.426D-07:2.379:0.50:1.00:  2.40:  1.50: 0.10:0.70: 1.90: 0.30:
(Ref. Friction stir weld allowable from test data)

Lower Trunnion Bridge 6-02a loads
MODEL: SC01

FATIGUE SCHEDULE BLOCK INPUT TABLE
----------------------------------
USS-02 spectrum                                    -

[Note: Stress = Input Value * Scale Factor]

Stress Scaling Factors for Block Case:  1    (TRUCK4-USS)

Scale Factor for Stress S0:    0.22312
Scale Factor for Stress S1:     0.0000

Stress Scaling Factors for Block Case:  2    (AIR4-USS)

Scale Factor for Stress S0:    0.22312
Scale Factor for Stress S1:     0.0000
```

Stress Scaling Factors for Block Case: 3 **(ON-ORBIT1-STA)**

Scale Factor for Stress S0: 0.22312
Scale Factor for Stress S1: 0.0000

Stress Scaling Factors for Block Case: 4 **(GSFC)**

Scale Factor for Stress S0: 0.22312
Scale Factor for Stress S1: 0.0000

Schedule info. was input manually

Total No. of Blocks in Schedule = 52

Block Number and Case Correspondences

Block Number From	-	To	Block Case No.
1	-	4	1
5	-	8	2
9	-	12	3
13	-	52	4

Stresses: Tension, bending or pin

Lower Trunnion Bridge 6-02a loads
MODEL: SC01

FATIGUE SCHEDULE BLOCK INPUT TABLE

USS-02 spectrum

BLOCK CASE NO. 1

STEP	MAT	NUMBER OF FATIGUE CYCLES	S0 (t1)	S0 (t2)	S1 (t1)	S1 (t2)
1:	1:	1878.00 :	28.40:	-28.40:	28.40:	-28.40:
2:	1:	2295.00 :	20.50:	-20.50:	20.50:	-20.50:
3:	1:	14604.00 :	14.80:	-14.80:	14.80:	-14.80:
4:	1:	41518.00 :	10.60:	-10.60:	10.60:	-10.60:
5:	1:	118087.00 :	7.60:	-7.60:	7.60:	-7.60:
6:	1:	160857.00 :	5.60:	-5.60:	5.60:	-5.60:
7:	1:	208843.00 :	4.00:	-4.00:	4.00:	-4.00:
8:	1:	1539305.00 :	3.30:	-3.30:	3.30:	-3.30:

Environmental Crack Growth Check for Sustained Stresses
(Kmax less than Keac): NOT SET

BLOCK CASE NO. 2

STEP	MAT	NUMBER OF FATIGUE CYCLES	S0 (t1)	S0 (t2)	S1 (t1)	S1 (t2)
1:	1:	17832.00 :	36.00:	-36.00:	36.00:	-36.00:
2:	1:	594.00 :	36.00:	-36.00:	36.00:	-36.00:
3:	1:	1069920.00 :	11.00:	-11.00:	11.40:	-11.40:

4:	1:	30.00 :	36.00:	-36.00:	36.00:	-36.00:
5:	1:	17832.00 :	36.00:	-36.00:	36.00:	-36.00:

Environmental Crack Growth Check for Sustained Stresses
(Kmax less than Keac): NOT SET

BLOCK CASE NO. 3

S T E P	M: A: T: L:	NUMBER OF FATIGUE CYCLES	S0 (t1)	S0 (t2)	S1 (t1)	S1 (t2)
1:	1:	34.00 :	1.02:	-1.02:	1.02:	-1.02:
2:	1:	34.00 :	0.81:	-0.81:	0.81:	-0.81:
3:	1:	60.00 :	0.61:	-0.61:	0.61:	-0.61:
4:	1:	179.00 :	0.41:	-0.41:	0.41:	-0.41:
5:	1:	117.00 :	1.02:	-1.02:	1.02:	-1.02:
6:	1:	414.00 :	0.81:	-0.81:	0.81:	-0.81:
7:	1:	2404.00 :	0.61:	-0.61:	0.61:	-0.61:
8:	1:	9789.00 :	0.41:	-0.41:	0.41:	-0.41:
9:	1:	62675.00 :	0.20:	-0.20:	0.20:	-0.20:

Environmental Crack Growth Check for Sustained Stresses
(Kmax less than Keac): NOT SET

BLOCK CASE NO. 4

S T E P	M: A: T: L:	NUMBER OF FATIGUE CYCLES	S0 (t1)	S0 (t2)	S1 (t1)	S1 (t2)
1:	1:	2.00 :	-100.00:	100.00:	-100.00:	100.00:
2:	1:	4.00 :	-90.00:	90.00:	-90.00:	90.00:
3:	1:	8.00 :	-80.00:	80.00:	-80.00:	80.00:
4:	1:	15.00 :	-70.00:	70.00:	-70.00:	70.00:
5:	1:	49.00 :	-60.00:	60.00:	-60.00:	60.00:
6:	1:	81.00 :	-50.00:	50.00:	-50.00:	50.00:
7:	1:	178.00 :	-40.00:	40.00:	-40.00:	40.00:
8:	1:	641.00 :	-30.00:	30.00:	-30.00:	30.00:
9:	1:	3120.00 :	-20.00:	20.00:	-20.00:	20.00:
10:	1:	3405.00 :	-10.00:	10.00:	-10.00:	10.00:
11:	1:	5019.00 :	-7.00:	7.00:	-7.00:	7.00:
12:	1:	28853.00 :	-5.00:	5.00:	-5.00:	5.00:
13:	1:	91655.00 :	-3.00:	3.00:	-3.00:	3.00:

Environmental Crack Growth Check for Sustained Stresses
(Kmax less than Keac): NOT SET

Lower Trunnion Bridge 6-02a loads
MODEL: SC01

FATIGUE SCHEDULE BLOCK STRESS TABLE

USS-02 spectrum

S T E P	M: A: T: L:	NUMBER OF FATIGUE CYCLES	S0 (ksi) (t1)	S0 (ksi) (t2)	S1 (ksi) (t1)	S1 (ksi) (t2)

1:	1:	1878.00	6.34:	-6.34:	0.00:	0.00:
2:	1:	2295.00	4.57:	-4.57:	0.00:	0.00:
3:	1:	14604.00	3.30:	-3.30:	0.00:	0.00:
4:	1:	41518.00	2.37:	-2.37:	0.00:	0.00:
5:	1:	118087.00	1.70:	-1.70:	0.00:	0.00:
6:	1:	160857.00	1.25:	-1.25:	0.00:	0.00:
7:	1:	208843.00	0.89:	-0.89:	0.00:	0.00:
8:	1:	1539305.00	0.74:	-0.74:	0.00:	0.00:

Environmental Crack Growth Check for Sustained Stresses
(Kmax less than Keac): NOT SET

Lower Trunnion Bridge 6-02a loads
MODEL: SC01

FATIGUE SCHEDULE BLOCK STRESS TABLE

USS-02 spectrum

STEP	MAT'L	NUMBER OF FATIGUE CYCLES	S0 (ksi) (t1)	S0 (ksi) (t2)	S1 (ksi) (t1)	S1 (ksi) (t2)
1:	1:	17832.00	8.03:	-8.03:	0.00:	0.00:
2:	1:	594.00	8.03:	-8.03:	0.00:	0.00:
3:	1:	1069920.00	2.45:	-2.45:	0.00:	0.00:
4:	1:	30.00	8.03:	-8.03:	0.00:	0.00:
5:	1:	17832.00	8.03:	-8.03:	0.00:	0.00:

Environmental Crack Growth Check for Sustained Stresses
(Kmax less than Keac): NOT SET

Lower Trunnion Bridge 6-02a loads
MODEL: SC01

FATIGUE SCHEDULE BLOCK STRESS TABLE

USS-02 spectrum

STEP	MAT'L	NUMBER OF FATIGUE CYCLES	S0 (ksi) (t1)	S0 (ksi) (t2)	S1 (ksi) (t1)	S1 (ksi) (t2)
1:	1:	34.00	0.23:	-0.23:	0.00:	0.00:
2:	1:	34.00	0.18:	-0.18:	0.00:	0.00:
3:	1:	60.00	0.14:	-0.14:	0.00:	0.00:
4:	1:	179.00	0.09:	-0.09:	0.00:	0.00:
5:	1:	117.00	0.23:	-0.23:	0.00:	0.00:
6:	1:	414.00	0.18:	-0.18:	0.00:	0.00:
7:	1:	2404.00	0.14:	-0.14:	0.00:	0.00:
8:	1:	9789.00	0.09:	-0.09:	0.00:	0.00:
9:	1:	62675.00	0.04:	-0.04:	0.00:	0.00:

Environmental Crack Growth Check for Sustained Stresses
(Kmax less than Keac): NOT SET

Lower Trunnion Bridge 6-02a loads
MODEL: SC01

FATIGUE SCHEDULE BLOCK STRESS TABLE

USS-02 spectrum

STEP	MAT	NUMBER OF FATIGUE CYCLES	S0 (ksi) (t1)	S0 (ksi) (t2)	S1 (ksi) (t1)	S1 (ksi) (t2)
1	1	2.00	-22.31	22.31	0.00	0.00
2	1	4.00	-20.08	20.08	0.00	0.00
3	1	8.00	-17.85	17.85	0.00	0.00
4	1	15.00	-15.62	15.62	0.00	0.00
5	1	49.00	-13.39	13.39	0.00	0.00
6	1	81.00	-11.16	11.16	0.00	0.00
7	1	178.00	-8.92	8.92	0.00	0.00
8	1	641.00	-6.69	6.69	0.00	0.00
9	1	3120.00	-4.46	4.46	0.00	0.00
10	1	3405.00	-2.23	2.23	0.00	0.00
11	1	5019.00	-1.56	1.56	0.00	0.00
12	1	28853.00	-1.12	1.12	0.00	0.00
13	1	91655.00	-0.67	0.67	0.00	0.00

Environmental Crack Growth Check for Sustained Stresses
(Kmax less than Keac): NOT SET

Lower Trunnion Bridge 6-02a loads
MODEL: SC01

ANALYSIS RESULTS:

Schdl	Block Step	Cycles	Final Flaw Size a	Final Flaw Size c	K max a-tip	K max c-tip	
1	1	2087387.	0.10013	0.10015	2.375	2.718	t
1	2	4174774.	0.10026	0.10030	2.377	2.720	t
1	3	6262161.	0.10040	0.10046	2.379	2.722	t
1	4	8349548.	0.10053	0.10061	2.380	2.724	t
1	5	9455756.	0.10766	0.10850	3.142	3.601	
1	6	10561964.	0.11586	0.11763	3.287	3.779	
1	7	11668172.	0.12538	0.12830	3.442	3.974	
1	8	12774380.	0.13652	0.14098	3.629	4.217	
1	9	12850086.	0.13652	0.14098	0.103	0.119	t
1	10	12925792.	0.13652	0.14098	0.103	0.119	t
1	11	13001498.	0.13652	0.14098	0.103	0.119	t
1	12	13077204.	0.13652	0.14098	0.103	0.119	t
1	13	13210234.	0.13699	0.14157	10.082	11.715	t
1	14	13343264.	0.13747	0.14217	10.105	11.744	t
1	15	13476294.	0.13796	0.14277	10.129	11.774	t
1	16	13609324.	0.13845	0.14339	10.153	11.805	t
1	17	13742354.	0.13895	0.14400	10.177	11.835	t
1	18	13875384.	0.13945	0.14463	10.201	11.866	t
1	19	14008414.	0.13996	0.14526	10.226	11.898	t
1	20	14141444.	0.14048	0.14590	10.250	11.930	t
1	21	14274474.	0.14101	0.14654	10.275	11.962	t
1	22	14407504.	0.14154	0.14720	10.301	11.995	t
1	23	14540534.	0.14207	0.14786	10.326	12.028	t
1	24	14673564.	0.14262	0.14852	10.352	12.062	t
1	25	14806594.	0.14317	0.14920	10.378	12.096	t
1	26	14939624.	0.14372	0.14988	10.404	12.131	t
1	27	15072654.	0.14429	0.15057	10.431	12.166	t

1	28	15205684.	0.14486	0.15127	10.457	12.201 t
1	29	15338714.	0.14543	0.15197	10.494	12.237 t
1	30	15471744.	0.14602	0.15269	10.511	12.273 t
1	31	15604774.	0.14661	0.15341	10.539	12.310 t
1	32	15737804.	0.14720	0.15414	10.567	12.347 t
1	33	15870834.	0.14781	0.15488	10.595	12.385 t
1	34	16003864.	0.14842	0.15562	10.623	12.423 t
1	35	16136894.	0.14903	0.15638	10.651	12.462 t
1	36	16269924.	0.14966	0.15714	10.680	12.501 t
1	37	16402954.	0.15029	0.15791	10.709	12.541 t
1	38	16535984.	0.15092	0.15870	10.739	12.581 t
1	39	16669014.	0.15157	0.15949	10.768	12.621 t
1	40	16802044.	0.15222	0.16029	10.798	12.663 t
1	41	16935074.	0.15288	0.16110	10.828	12.704 t
1	42	17068104.	0.15355	0.16192	10.859	12.747 t
1	43	17201134.	0.15422	0.16275	10.890	12.789 t
1	44	17334164.	0.15490	0.16359	10.921	12.833 t
1	45	17467194.	0.15559	0.16444	10.952	12.877 t
1	46	17600224.	0.15629	0.16529	10.984	12.921 t
1	47	17733254.	0.15699	0.16617	11.016	12.966 t
1	48	17866284.	0.15770	0.16705	11.049	13.012 t
1	49	17999314.	0.15842	0.16794	11.081	13.058 t
1	50	18132344.	0.15915	0.16884	11.114	13.105 t
1	51	18265374.	0.15989	0.16976	11.148	13.152 t
1	52	18398404.	0.16063	0.17068	11.181	13.201 t

FINAL RESULTS:
Critical Crack Size has NOT been reached.
at Cycle No. 91655.00
of Load Step No. 13 Description: None
of Block No. 52
of Schedule No. 1
Crack Sizes: a = 0.160634 , c = 0.170682 , a/c = 0.9411
Total Cycles = 18398404.

Prepared By	Name/Date C. Bala / 3-5-03	LOCKHEED MARTIN Science, Engineering, Analysis, & Test Mechanical Systems Analysis Department	FSW-fract.doc
Checked By	4/7/03		Drawing No. SDG39135728,5735,5754
Title: USS-02 Friction Stir welded tubes Fracture Analysis			

SC01

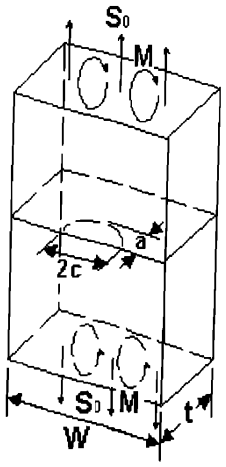

$$S_1 = \frac{6M}{Wt^2}$$

$$0 < \frac{2c}{W} \leq 1$$

$$0.1 \leq \frac{a}{c} \leq 1.2$$

Lower Angle Tube

Material	7050-T7451
NASA/FLAGRO Crack type	SC01
Section Properties:	
Plate thickness t	0.250 in
Plate width w	4.562 in.
Crack Properties:	a = 0.10 in c = 0.10 in
Stress:	S0 = 18.816 ksi (ref. Sect 1.2.1.4 , page 25)

The material data is used from the NASGRO library material data ID M7GJ11AB1, 7050-7T451 except for the Ftu and Fty which are changed to match the weld allowables (ref. Sect 1.2.1.4, page 10)

The spectrum for the fracture analysis is obtained from the AMS-02 Structural Verification Plan JSC 28792 Rev. C sect 8. The spectrum includes Truck transport, Air transport, On orbit and Launch/ Landing loads.
The truck, air and on orbit loads are run for one mission and the Launch/landing for 3 missions.
The results show that the crack growth is stable

Prepared By	Name/Date C. Bala / 3-5-03	**LOCKHEED MARTIN** Science, Engineering, Analysis, & Test *Mechanical Systems Analysis Department*	FSW-fract.doc
Checked By	4/7/03		Drawing No. SDG39135728,5735,5764
Title: USS-02 Friction Stir welded tubes Fracture Analysis			

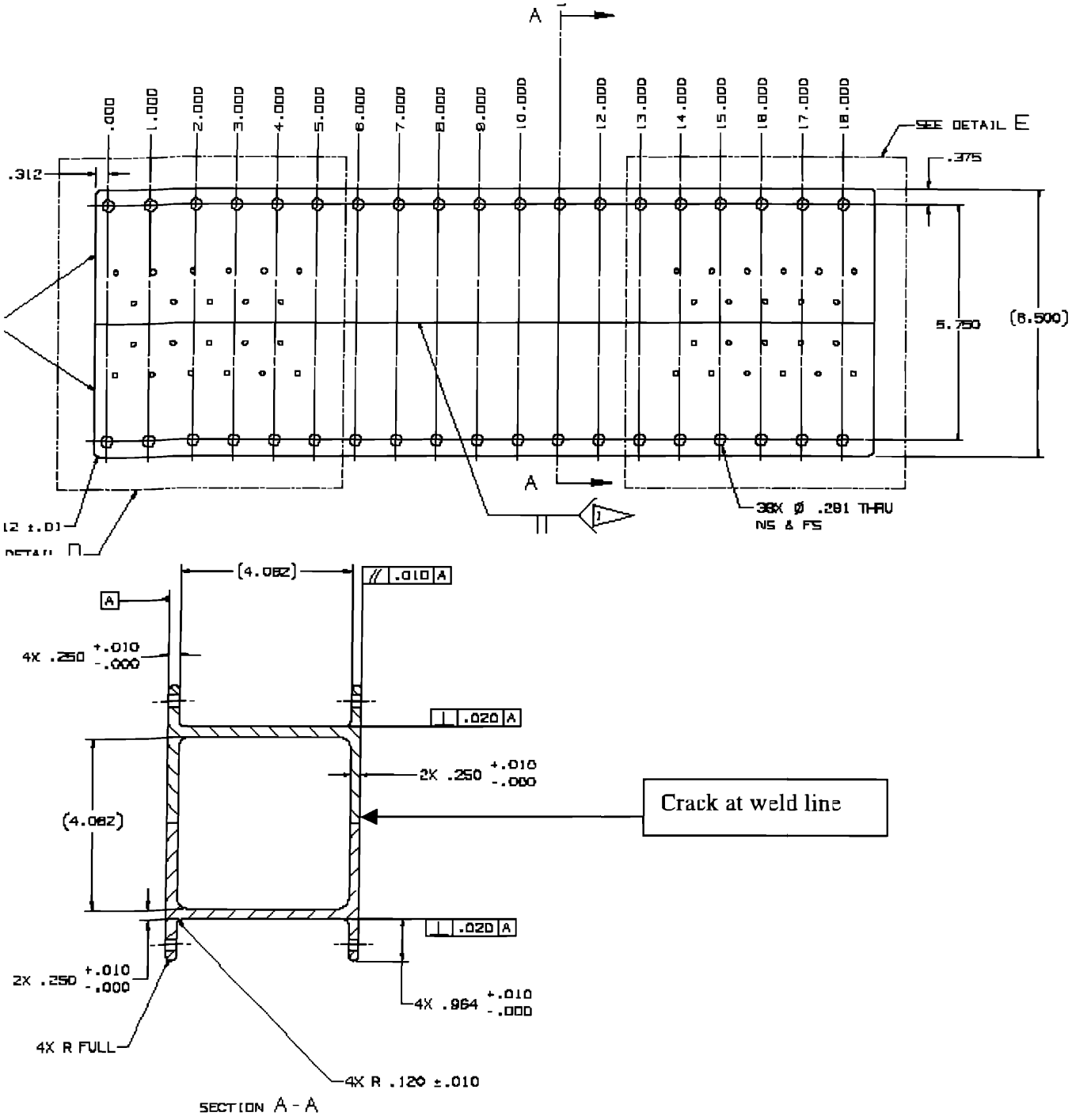

FATIGUE CRACK GROWTH ANALYSIS

DATE: 08/09/02 TIME: 14:52:20
(computed: NASGRO Version 3.0.4, Jan 2000.)
U.S. customary units [inches, ksi, ksi sqrt(in)]

PROBLEM TITLE

Lower Angle Tube 6-02a Loads

Crack Growth Model: Non Interaction
Equation/Table : NASGRO Equation

GEOMETRY

MODEL: SC01-Surface crack (2D) in finite width plate.

Plate Thickness, t = 0.2500
Plate Width, W = 4.5620

FLAW SIZE: (User specified)

a (init.) = 0.1000
c (init.) = 0.1000
a/c (init.) = 1.000

MATERIAL

MATL 1: Edited file data -2211
-2221

Material Header Info.:

Material 1 Data ID: M7GJ11AB1
Alloy Description : 7050-T73651 & T7451 -26
11
Alloy Cond/HT : Plt & Sht; L-T; LA & HHA
-2621
Product Form : -2631

Environment : -2641

Specimen Type :
Specimen Orientation :
Specimen Thickness :
Specimen Width :
Specimen Test Frequency :
Data Reference :

Material Properties:

Matl No.	UTS	YS	K1e	K1c	Ak	Bk	Thk	Kc	Keac
1	**57.0**	**57.0**	43.0	31.0	1.00	1.00	0.250	58.7	

Matl No.	Crack Growth Eqn Constants									
	C	n	p	q	DKo	Cth+	Cth-	Rcl	Alpha	Smax/SIGo
1	0.426D-07	2.379	0.50	1.00	2.40	1.50	0.10	0.70	1.90	0.30

(Ref. Friction stir weld allowable from test data)

Lower Angle Tube 6-02a Loads
MODEL: SC01

FATIGUE SCHEDULE BLOCK INPUT TABLE

USS-02 spectrum

[Note: Stress = Input Value * Scale Factor]

Stress Scaling Factors for Block Case: 1 **(TRUCK4-USS)**

Scale Factor for Stress S0: 0.18816
Scale Factor for Stress S1: 0.0000

Stress Scaling Factors for Block Case: 2 **(AIR4-USS)**

Scale Factor for Stress S0: 0.18816
Scale Factor for Stress S1: 0.0000

Stress Scaling Factors for Block Case: 3 **(ONORBIT1-STA)**

Scale Factor for Stress S0: 0.18816
Scale Factor for Stress S1: 0.0000

Stress Scaling Factors for Block Case: 4 **(GSFC)**

Scale Factor for Stress S0: 0.18816
Scale Factor for Stress S1: 0.0000

Schedule info. was input manually

Total No. of Blocks in Schedule = 52

Block Number and Case Correspondences

Block Number From	-	To	Block Case No.
1	-	4	1
5	-	8	2
9	-	12	3
13	-	52	4

Stresses: Tension, bending or pin

Lower Angle Tube 6-02a Loads
MODEL: SC01

FATIGUE SCHEDULE BLOCK INPUT TABLE

USS-02 spectrum

BLOCK CASE NO. 1

S T E P	M: A: T: L:	NUMBER OF FATIGUE CYCLES	S0 (t1)	S0 (t2)	S1 (t1)	S1 (t2)
1:	1:	1878.00	28.40:	-28.40:	28.40:	-28.40:
2:	1:	2295.00	20.50:	-20.50:	20.50:	-20.50:

3:	1:	14604.00 :	14.80:	-14.80:	14.80:	-14.80:
4:	1:	41518.00 :	10.60:	-10.60:	10.60:	-10.60:
5:	1:	118087.00 :	7.60:	-7.60:	7.60:	-7.60:
6:	1:	160857.00 :	5.60:	-5.60:	5.60:	-5.60:
7:	1:	208843.00 :	4.00:	-4.00:	4.00:	-4.00:
8:	1:	1539305.00 :	3.30:	-3.30:	3.30:	-3.30:

Environmental Crack Growth Check for Sustained Stresses
(Kmax less than Keac): NOT SET

BLOCK CASE NO. 2

S T E P	M: A: T: L:	NUMBER OF FATIGUE CYCLES	S0 (t1)	S0 (t2)	S1 (t1)	S1 (t2)
1:	1:	17832.00 :	36.00:	-36.00:	36.00:	-36.00:
2:	1:	594.00 :	36.00:	-36.00:	36.00:	-36.00:
3:	1:	1069920.00 :	11.00:	-11.00:	11.40:	-11.40:
4:	1:	30.00 :	36.00:	-36.00:	36.00:	-36.00:
5:	1:	17832.00 :	36.00:	-36.00:	36.00:	-36.00:

Environmental Crack Growth Check for Sustained Stresses
(Kmax less than Keac): NOT SET

BLOCK CASE NO. 3

S T E P	M: A: T: L:	NUMBER OF FATIGUE CYCLES	S0 (t1)	S0 (t2)	S1 (t1)	S1 (t2)
1:	1:	34.00 :	1.02:	-1.02:	1.02:	-1.02:
2:	1:	34.00 :	0.81:	-0.81:	0.81:	-0.81:
3:	1:	60.00 :	0.61:	-0.61:	0.61:	-0.61:
4:	1:	179.00 :	0.41:	-0.41:	0.41:	-0.41:
5:	1:	117.00 :	1.02:	-1.02:	1.02:	-1.02:
6:	1:	414.00 :	0.81:	-0.81:	0.81:	-0.81:
7:	1:	2404.00 :	0.61:	-0.61:	0.61:	-0.61:
8:	1:	9789.00 :	0.41:	-0.41:	0.41:	-0.41:
9:	1:	62675.00 :	0.20:	-0.20:	0.20:	-0.20:

Environmental Crack Growth Check for Sustained Stresses
(Kmax less than Keac): NOT SET

BLOCK CASE NO. 4

S T E P	M: A: T: L:	NUMBER OF FATIGUE CYCLES	S0 (t1)	S0 (t2)	S1 (t1)	S1 (t2)
1:	1:	2.00 :	-100.00:	100.00:	-100.00:	100.00:
2:	1:	4.00 :	-90.00:	90.00:	-90.00:	90.00:
3:	1:	8.00 :	-80.00:	80.00:	-80.00:	80.00:
4:	1:	15.00 :	-70.00:	70.00:	-70.00:	70.00:
5:	1:	49.00 :	-60.00:	60.00:	-60.00:	60.00:
6:	1:	81.00 :	-50.00:	50.00:	-50.00:	50.00:
7:	1:	178.00 :	-40.00:	40.00:	-40.00:	40.00:

8:	1:	641.00	-30.00:	30.00:	-30.00:	30.00:
9:	1:	3120.00	-20.00:	20.00:	-20.00:	20.00:
10:	1:	3405.00	-10.00:	10.00:	-10.00:	10.00:
11:	1:	5019.00	-7.00:	7.00:	-7.00:	7.00:
12:	1:	28853.00	-5.00:	5.00:	-5.00:	5.00:
13:	1:	91655.00	-3.00:	3.00:	-3.00:	3.00:

Environmental Crack Growth Check for Sustained Stresses
(Kmax less than Keac): NOT SET

Lower Angle Tube 6-02a Loads
MODEL: SC01

FATIGUE SCHEDULE BLOCK STRESS TABLE

USS-02 spectrum

S T E P	M: A: T: L:	NUMBER OF FATIGUE CYCLES	S0 (ksi) t1)	S0 (ksi) t2)	S1 (ksi) t1)	S1 (ksi) t2)
1:	1:	1878.00	5.34:	-5.34:	0.00:	0.00:
2:	1:	2295.00	3.86:	-3.86:	0.00:	0.00:
3:	1:	14604.00	2.78:	-2.78:	0.00:	0.00:
4:	1:	41518.00	1.99:	-1.99:	0.00:	0.00:
5:	1:	118087.00	1.43:	-1.43:	0.00:	0.00:
6:	1:	160857.00	1.05:	-1.05:	0.00:	0.00:
7:	1:	208843.00	0.75:	-0.75:	0.00:	0.00:
8:	1:	1539305.00	0.62:	-0.62:	0.00:	0.00:

Environmental Crack Growth Check for Sustained Stresses
(Kmax less than Keac): NOT SET

Lower Angle Tube 6-02a Loads
MODEL: SC01

FATIGUE SCHEDULE BLOCK STRESS TABLE

USS-02 spectrum

S T E P	M: A: T: L:	NUMBER OF FATIGUE CYCLES	S0 (ksi) t1)	S0 (ksi) t2)	S1 (ksi) t1)	S1 (ksi) t2)
1:	1:	17832.00	6.77:	-6.77:	0.00:	0.00:
2:	1:	594.00	6.77:	-6.77:	0.00:	0.00:
3:	1:	1069920.00	2.07:	-2.07:	0.00:	0.00:
4:	1:	30.00	6.77:	-6.77:	0.00:	0.00:
5:	1:	17832.00	6.77:	-6.77:	0.00:	0.00:

Environmental Crack Growth Check for Sustained Stresses
(Kmax less than Keac): NOT SET

Lower Angle Tube 6-02a Loads
MODEL: SC01

FATIGUE SCHEDULE BLOCK STRESS TABLE

USS-02 spectrum

S	M:	NUMBER	S0	S1

TEP	AT	OF FATIGUE CYCLES	(ksi) (t1)	(ksi) (t2)	(ksi) (t1)	(ksi) (t2)
1	1	34.00	0.19	-0.19	0.00	0.00
2	1	34.00	0.15	-0.15	0.00	0.00
3	1	60.00	0.11	-0.11	0.00	0.00
4	1	179.00	0.08	-0.08	0.00	0.00
5	1	117.00	0.19	-0.19	0.00	0.00
6	1	414.00	0.15	-0.15	0.00	0.00
7	1	2404.00	0.11	-0.11	0.00	0.00
8	1	9789.00	0.08	-0.08	0.00	0.00
9	1	62675.00	0.04	-0.04	0.00	0.00

Environmental Crack Growth Check for Sustained Stresses
(Kmax less than Keac): NOT SET

Lower Angle Tube 6-02a Loads
MODEL: SC01

FATIGUE SCHEDULE BLOCK STRESS TABLE

USS-02 spectrum

STEP	AT	NUMBER OF FATIGUE CYCLES	S0 (ksi) (t1)	S0 (ksi) (t2)	S1 (ksi) (t1)	S1 (ksi) (t2)
1	1	2.00	-18.82	18.82	0.00	0.00
2	1	4.00	-16.93	16.93	0.00	0.00
3	1	8.00	-15.05	15.05	0.00	0.00
4	1	15.00	-13.17	13.17	0.00	0.00
5	1	49.00	-11.29	11.29	0.00	0.00
6	1	81.00	-9.41	9.41	0.00	0.00
7	1	178.00	-7.53	7.53	0.00	0.00
8	1	641.00	-5.64	5.64	0.00	0.00
9	1	3120.00	-3.76	3.76	0.00	0.00
10	1	3405.00	-1.88	1.88	0.00	0.00
11	1	5019.00	-1.32	1.32	0.00	0.00
12	1	28853.00	-0.94	0.94	0.00	0.00
13	1	91655.00	-0.56	0.56	0.00	0.00

Environmental Crack Growth Check for Sustained Stresses
(Kmax less than Keac): NOT SET

Lower Angle Tube 6-02a Loads
MODEL: SC01

ANALYSIS RESULTS:

Schdl	Block Step	Cycles	Final Flaw Size a	Final Flaw Size c	K max a-tip	K max c-tip	
1	1	2087387.	0.10001	0.10004	2.000	2.289	t
1	2	4174774.	0.10002	0.10008	2.000	2.290	t
1	3	6262161.	0.10003	0.10012	2.001	2.290	t
1	4	8349548.	0.10004	0.10017	2.001	2.290	t
1	5	9455756.	0.10365	0.10425	2.588	2.963	
1	6	10561964.	0.10761	0.10872	2.654	3.041	

1	7	11668172.	0.11196	0.11361	2.717	3.116	
1	8	12774380.	0.11673	0.11900	2.785	3.199	
1	9	12850086.	0.11673	0.11900	0.079	0.091	t
1	10	12925792.	0.11673	0.11900	0.079	0.091	t
1	11	13001498.	0.11673	0.11900	0.079	0.091	t
1	12	13077204.	0.11673	0.11900	0.079	0.091	t
1	13	13210234.	0.11691	0.11921	7.739	8.891	t
1	14	13343264.	0.11710	0.11942	7.746	8.900	t
1	15	13476294.	0.11729	0.11963	7.753	8.910	t
1	16	13609324.	0.11747	0.11984	7.761	8.919	t
1	17	13742354.	0.11766	0.12005	7.768	8.928	t
1	18	13875384.	0.11785	0.12027	7.776	8.938	t
1	19	14008414.	0.11804	0.12048	7.784	8.947	t
1	20	14141444.	0.11823	0.12069	7.791	8.956	t
1	21	14274474.	0.11842	0.12091	7.799	8.966	t
1	22	14407504.	0.11861	0.12112	7.806	8.975	t
1	23	14540534.	0.11880	0.12134	7.814	8.985	t
1	24	14673564.	0.11900	0.12156	7.822	8.994	t
1	25	14806594.	0.11919	0.12177	7.829	9.004	t
1	26	14939624.	0.11938	0.12199	7.837	9.014	t
1	27	15072654.	0.11958	0.12221	7.845	9.023	t
1	28	15205684.	0.11977	0.12243	7.853	9.033	t
1	29	15338714.	0.11997	0.12265	7.860	9.043	t
1	30	15471744.	0.12017	0.12287	7.868	9.052	t
1	31	15604774.	0.12036	0.12310	7.876	9.062	t
1	32	15737804.	0.12056	0.12332	7.884	9.072	t
1	33	15870834.	0.12076	0.12354	7.892	9.082	t
1	34	16003864.	0.12096	0.12377	7.900	9.092	t
1	35	16136894.	0.12116	0.12399	7.908	9.102	t
1	36	16269924.	0.12136	0.12422	7.916	9.112	t
1	37	16402954.	0.12156	0.12445	7.924	9.122	t
1	38	16535984.	0.12176	0.12468	7.932	9.132	t
1	39	16669014.	0.12196	0.12490	7.940	9.142	t
1	40	16802044.	0.12217	0.12513	7.948	9.152	t
1	41	16935074.	0.12237	0.12537	7.956	9.162	t
1	42	17068104.	0.12258	0.12560	7.964	9.173	t
1	43	17201134.	0.12278	0.12583	7.972	9.183	t
1	44	17334164.	0.12299	0.12606	7.980	9.193	t
1	45	17467194.	0.12320	0.12630	7.988	9.203	t
1	46	17600224.	0.12340	0.12653	7.996	9.214	t
1	47	17733254.	0.12361	0.12677	8.005	9.224	t
1	48	17866284.	0.12382	0.12700	8.013	9.235	t
1	49	17999314.	0.12403	0.12724	8.021	9.245	t
1	50	18132344.	0.12424	0.12748	8.029	9.256	t
1	51	18265374.	0.12445	0.12772	8.038	9.266	t
1	52	18398404.	0.12467	0.12796	8.046	9.277	t

FINAL RESULTS:
Critical Crack Size has NOT been reached.
at Cycle No. 91655.00
of Load Step No. 13 Description: None
of Block No. 52
of Schedule No. 1
Crack Sizes: a = 0.124665 , c = 0.127960 , a/c = 0.9742
Total Cycles = 18398404.