ARDE, INC.
EG 10348, N/C
November 6, 2001

# FRACTURE AND STRESS REPORT

## OF

## $CO_2$ / XENON TANK ASSEMBLY

## PN C4810 /D4852

## FOR

## TRD GAS SUPPLY SYSTEM

SUBMITTED TO:

Massachusetts Institute of Technology
Laboratory for Nuclear Science
51 Vassar St.
Cambridge, Massachusetts 02139

PREPARED BY:

Aris Escalona 12/4/01

APPROVED BY:

Kirk Sneddon, Engineering

T. Van Fossen, Program Management

ARDE, INC.
500 Walnut Street
Norwood, NJ 07648

| ARDE, INC. | TITLE: FRACTURE AND STRESS REPORT OF $CO_2$/ XENON TANK ASSEMBLY PN C4810/D4852 FOR TRD GAS SUPPLY SYSTEM | FORM NO.: | QS 05022 |
|---|---|---|---|
| | | DATE: | 9 JULY 2001 |
| | DOCUMENT NO.: EG 10348 | REVISION: | A |

ENGINEERING CHANGE RECORD
APPROVALS

| Chg | Page | Index | Description | Date | Engr | QA | Mfg | Prog |
|---|---|---|---|---|---|---|---|---|
| NC | | | INITIAL RELEASE EO #2138 | | | | | |

TABLE OF CONTENTS


| PARAGRAPH | TITLE | PAGE# |
|---|---|---|
| 1.0 | INTRODUCTION | 1 |
| 2.0 | DISCUSSION | 2 |
| 3.0 | RESULTS | 6 |
| 4.0 | ANALYSIS | 8 |
| 4.1 | MATERIALS DATA | 8 |
| 4.2 | SUMMARY OF LOADS | 8 |
| 4.3 | TANK | 9 |
| 4.3.1 | PRESSURE ANALYSIS | 9 |
| 4.3.2 | BUCKLING | 11 |
| 4.3.3 | PRESSURE CYCLE FATIGUE ANALYSIS | 13 |
| 4.3.4 | FATIGUE VIBRATION & TANK NATURAL FREQUENCY | 13 |
| 4.3.5 | FRACTURE MECHANICS | 17 |
| 4.3.5.1 | LEAK-BEFORE-BURST | 17 |
| 4.3.5.2 | SAFE LIFE | 19 |
| 4.3.6 | TUBE ANALYSIS | 30 |
| 4.3.7 | .625-18 THREAD | 31 |
| 4.4 | MOUNTING BRACKET | 37 |
| 4.4.1 | STRUCTURAL ANALYSIS | 37 |
| 4.4.2 | FATIGUE ANALYSIS | 41 |
| 4.4.3 | FRACTURE MECHANICS | 44 |
| 4.5 | TORQUE FOR .25-28 BOLTS | 45 |
| 4.6 | WEIGHT & VOLUME ANALYSIS | 52 |
| 5.0 | REFERENCES | 53 |

LIST OF FIGURES


| FIGURE | TITLE | PAGE |
|---|---|---|
| 2-1 | ASSEMBLY, TANK, C4810 | 3 |
| 2-2 | CO2 / XENON TANK MOUNTING ASSEMBLY, PN D4852 | 4 |
| 2-3 | BRACKET, PN C105585 | 5 |
| 3-1 | SUMMARY OF ANALYTICAL RESULTS | 7 |
| 4.3.1-1 | CYLINDER TANK ASSEMBLY AT 600 PSI PROOF PRESSURE | 10 |
| 4.3.2-1 | CYLINDER BUCKLING CURVE | 12 |
| 4.3.4-1 | CYLINDER TANK AT 10G AXIAL ACCELERATION | 15 |
| 4.3.4-2 | CYLINDER TANK AT 10G LATERAL ACCELERATION | 16 |
| 4.4-1 | BRACKET C105585 AT 10g AXIAL ACCELERATION | 38 |
| 4.4-2 | BRACKET C105585 AT 10g LATERAL ACCELERATION | 39 |
| 4.4-3 | BRACKET C105585 AT 10g VERTICAL ACCELERATION | 40 |

## 1.0 INTRODUCTION

This report presents the fracture and stress analysis of the Tank Assembly per PN C4810, ref. 1, used for storing a mixture of CO2 and Xenon gases for the TRD gas supply system. This report will show compliance of the CO2 / Xenon mixture storage vessel design and its mounting brackets with the Statement of Work for the TRD Gas Supply System of Alpha Magnetic Spectrometer (AMS 02) program per PM 10070 (ref.2) and MIL-STD-1522A (ref.3).

## 2.0 DISCUSSION

The purpose of this report is to show that the CO2 / Xenon cylindrical tank, ref. 1, meets or exceeds the structural and environmental conditions as specified in PM 10070, ref.2, and is in accordance with MIL-STD-1522A design standard (ref.3), SSP 30559, Structural Design and Verification Requirement, International Space Station Alpha (ref.10), and SSP 30558, Fracture Control Requirements for Space Station (ref. 11).

The cylindrical tank, PN C4810, see figure 2-1, is a one liter tank capacity used for storing mixture of CO2 and Xenon gas. The tank is made of an annealed stainless steel CRES 321seamless tubing welded to a machined CRES 304L heads at both ends and then annealed to remove any residual stresses from welding. The tank is designed with a minimum of 4:1 burst safety factor. A standard tubing material with the minimum wall thickness available was used in the tank design. The resulting design shows robust margins in proof and burst conditions, and is structurally adequate to withstand the environmental launch condition specified.

In the assembly of the tank and brackets, see figure 2-2, the mounting brackets used are the same on both ends using PN C105585, figure 2-3. Section 4.0 will show that the tank and bracket assemblies are structurally adequate to support the induced loads.

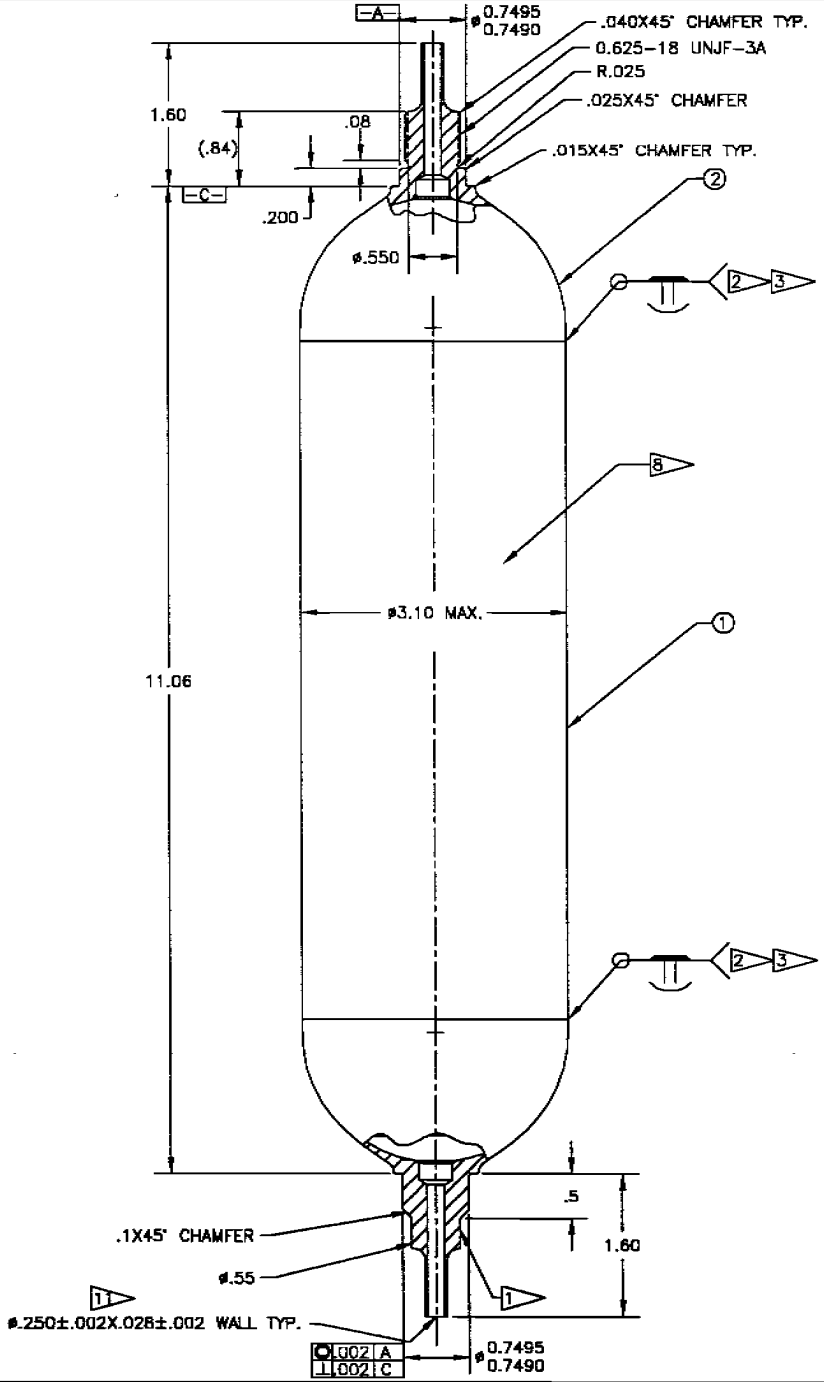


| REVISIONS | | | | | |
|---|---|---|---|---|---|
| E.O. NO. | SYM | ZONE | DESCRIPTION | DATE | APPROVED |
| | A | | ADDED NOTE 14. | 12/6/01 | |

Ⓐ 14. ANNEAL PER AES 340.

13. PENETRANT INSPECT CYLINDER ID PER AES 455 & 551 BEFORE CLOSURE.

12. PENETRANT INSPECT EXTERNAL SURFACES PER AES 455 & 551.

11. DO NOT BREAK EDGES.

10. ACCEPTANCE TEST PER QA 10159.

9. DESIGN PRESSURES:

MEOP = 300 PSIG
PROOF = 600 PSIG
BURST = 1200 PSIG MIN.

8. IDENTIFY PER AES 601, METHOD "A":

CYLINDER, GAS
OPERATING PRESSURE : 300 PSIG
PROOF PRESSURE : 600 PSIG.
TEST DATE : _____
ARDE PN C4810 SN _____
MFR: 05980
ARDE INC., NORWOOD, NJ 07648-1316

7. VOLUME = 61.03 CU. IN. MIN. (1 LITER).

6. WEIGHT = 1.9 LB. MAX.

8. ULTRASONIC CLEAN PER AES 320.

7. PASSIVATE PER AES 254.

6. PICKLE PER AES 251.

5. CLEAN PER AES 253.

4. VACUBLAST PER AES 362.

3. INSPECT WELDS PER AES 450, 455 & 551.

2. WELD PER AES 501 USING WELD WIRE PER AWS A5.9 CLASS ER 308L.

1. IDENTIFY PER AES 601, METHOD D.

NOTES:

**Figure 2-1**

| QTY REQD PER DASH NO. | ITEM NO. | CODE IDENT | PART OR IDENTIFYING NO. | NOMENCLATURE OR DESCRIPTION | MATERIAL | SPECIFICATION |
|---|---|---|---|---|---|---|
| 2 | 2 | | B105586 | BOSS, PREFORM | (CRES 304L) | |
| 1 | 1 | | | CYLINDER, ø3 X.049 X 7.60L | CRES 321 | ASTM A213 |

PARTS LIST

UNLESS OTHERWISE SPECIFIED
DIMENSIONS ARE IN INCHES
TOLERANCES
.X = ±.030, .XX = ±.010
.XXX = ±.005 ANGULAR ± 30'
BREAK SHARP EDGES .003-.015
ALL SMALL FILLETS .020-.040R
THREADS PER FED. HNDBK H-28 AND SUPPLEMENTS
DIMENSIONING PER ASME Y14.5M 1994
WELD SYMBOLS PER AWS A2.4
SURFACE ROUGHNESS SYMBOLS PER ANSI-B46.1
ALL FINISHED SURFACES 125

NEXT ASSEMBLY
D4852

| | | |
|---|---|---|
| DRAWN BY | J.BRUECKL | 4/25/01 |
| DESIGN | | |
| STRESS | A.ESCALONA | 10/17/01 |
| MANUFACTURING | J.EHALT | 10/17/01 |
| QUALITY | S.MERRICK | 10/17/01 |
| PROGRAM | T.WHITTOSSER | 10/18/01 |

RELEASE FOR FAB. PER E.O. # 2122

ARDE, INC.
NORWOOD, N.J.

TITLE
ASSEMBLY, TANK

SIZE C | CAGE CODE 05980 | C4810

SCALE FULL | UNIT WT | SHEET 1 OF 1

J/N 39001

DWG NO C4810 | SH 1 | REV -

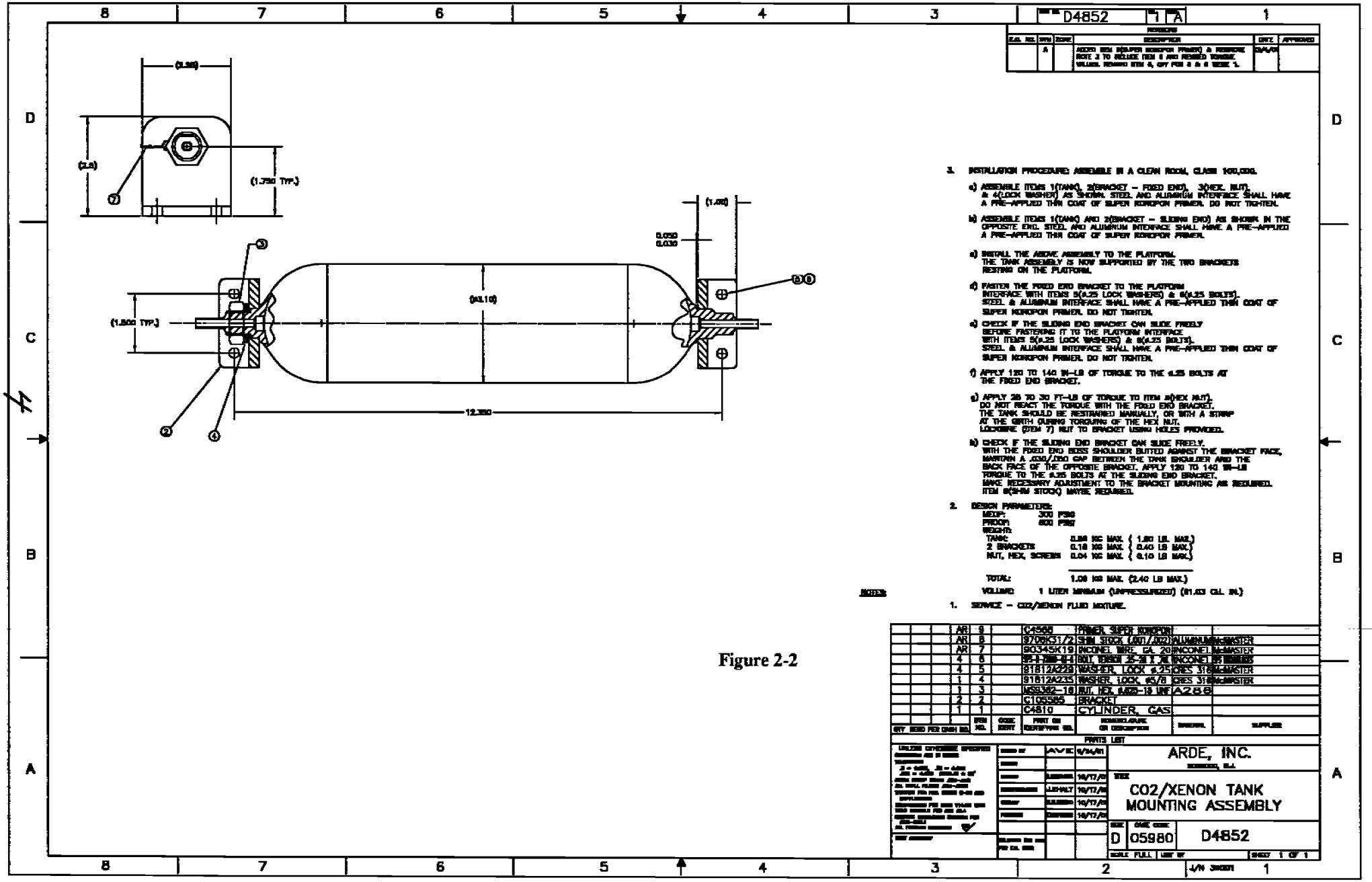
D4852
1 A
(1.750 TYP.)
(1.500 TYP.)
(1.00)
0.050
0.030
(ø3.10)
12.350
3. INSTALLATION PROCEDURE: ASSEMBLE IN A CLEAN ROOM, CLASS 100,000.
a) ASSEMBLE ITEMS 1(TANK), 2(BRACKET – FIXED END), 3(HEX. NUT), & 4(LOCK WASHER) AS SHOWN. STEEL AND ALUMINUM INTERFACE SHALL HAVE A PRE-APPLIED THIN COAT OF SUPER KOROPON PRIMER. DO NOT TIGHTEN.
b) ASSEMBLE ITEMS 1(TANK) AND 2(BRACKET – SLIDING END) AS SHOWN IN THE OPPOSITE END. STEEL AND ALUMINUM INTERFACE SHALL HAVE A PRE-APPLIED A PRE-APPLIED THIN COAT OF SUPER KOROPON PRIMER.
c) INSTALL THE ABOVE ASSEMBLY TO THE PLATFORM. THE TANK ASSEMBLY IS NOW SUPPORTED BY THE TWO BRACKETS RESTING ON THE PLATFORM.
d) FASTEN THE FIXED END BRACKET TO THE PLATFORM INTERFACE WITH ITEMS 5(ø.25 LOCK WASHERS) & 6(ø.25 BOLTS). STEEL & ALUMINUM INTERFACE SHALL HAVE A PRE-APPLIED THIN COAT OF SUPER KOROPON PRIMER. DO NOT TIGHTEN.
e) CHECK IF THE SLIDING END BRACKET CAN SLIDE FREELY BEFORE FASTENING IT TO THE PLATFORM INTERFACE WITH ITEMS 5(ø.25 LOCK WASHERS) & 6(ø.25 BOLTS). STEEL & ALUMINUM INTERFACE SHALL HAVE A PRE-APPLIED THIN COAT OF SUPER KOROPON PRIMER. DO NOT TIGHTEN.
f) APPLY 120 TO 140 IN-LB OF TORQUE TO THE ø.25 BOLTS AT THE FIXED END BRACKET.
g) APPLY 25 TO 30 FT-LB OF TORQUE TO ITEM 8(HEX NUT). DO NOT REACT THE TORQUE WITH THE FIXED END BRACKET. THE TANK SHOULD BE RESTRAINED MANUALLY, OR WITH A STRAP AT THE GIRTH DURING TORQUING OF THE HEX NUT. LOCKWIRE (ITEM 7) NUT TO BRACKET USING HOLES PROVIDED.
h) CHECK IF THE SLIDING END BRACKET CAN SLIDE FREELY. WITH THE FIXED END BOSS SHOULDER BUTTED AGAINST THE BRACKET FACE, MAINTAIN A .030/.050 GAP BETWEEN THE TANK SHOULDER AND THE BACK FACE OF THE OPPOSITE BRACKET. APPLY 120 TO 140 IN-LB TORQUE TO THE ø.25 BOLTS AT THE SLIDING END BRACKET. MAKE NECESSARY ADJUSTMENT TO THE BRACKET MOUNTING AS REQUIRED. ITEM 8(SHIM STOCK) MAYBE REQUIRED.
2. DESIGN PARAMETERS:
MEOP: 300 PSIG
PROOF: 600 PSIG
WEIGHT:
TANK: 0.88 KG MAX. ( 1.80 LB. MAX.)
2 BRACKETS 0.18 KG MAX. ( 0.40 LB MAX.)
NUT, HEX, SCREWS 0.04 KG MAX. ( 0.10 LB MAX.)
TOTAL: 1.08 KG MAX. (2.40 LB MAX.)
VOLUME: 1 LITER MINIMUM (UNPRESSURIZED) (61.03 CU. IN.)
NOTES:
1. SERVICE – CO2/XENON FLUID MIXTURE.
AR 9 C4566 PRIMER, SUPER KOROPON
AR 8 9706K31/2 SHIM STOCK (.001/.002) ALUMINUM McMASTER
AR 7 90345K19 INCONEL WIRE, GA. 20 INCONEL McMASTER
4 6 [illegible] BOLT, TENSION 25-28 X .75 INCONEL [illegible]
4 5 91812A229 WASHER, LOCK ø.25 CRES 316 McMASTER
1 4 91812A235 WASHER, LOCK, ø5/8 CRES 316 McMASTER
1 3 MS9362-18 NUT, HEX, ø.625-18 UNF A286
2 2 C105585 BRACKET
1 1 C4810 CYLINDER, GAS
QTY REQD PER DASH NO. ITEM NO. CODE IDENT PART OR IDENTIFYING NO. NOMENCLATURE OR DESCRIPTION MATERIAL SUPPLIER
PARTS LIST
ARDE, INC.
CO2/XENON TANK MOUNTING ASSEMBLY
D 05980 D4852
SCALE FULL
SHEET 1 OF 1

Figure 2-2

| REVISIONS | | | | | |
|---|---|---|---|---|---|
| E.O. NO. | SYM | ZONE | DESCRIPTION | DATE | APPROVED |
| | A | | NOTE 2 WAS "MAKE FROM - AL 6061-T6 ..." NOTE 4 WAS "...TYPE II, CLASS 1 WITH DILUTE ..." REMOVED "(  )" FROM .25 & 2.5, ADDED R.12, AND Ø.257/.252 WAS Ø.265. | 12/4/01 | |

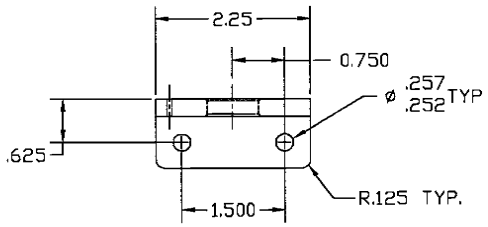


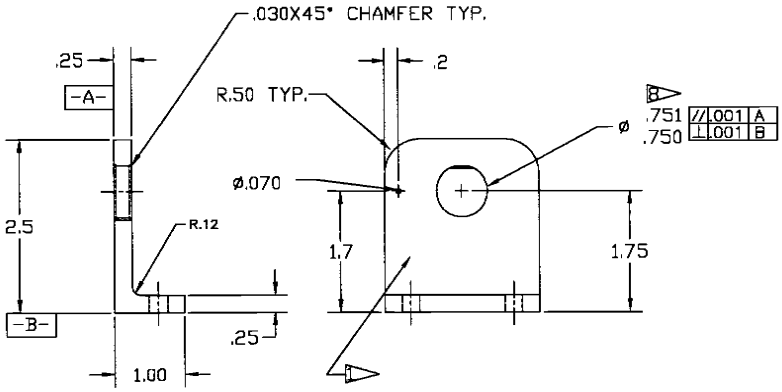


8. REAM/DRILL HOLE AFTER PENETRANT INSPECTION.
7. PRE-PENETRANT ETCH PER AES 366.
6. BREAK EDGES OF HOLE, .010 TO .015.
5. MACHINE SURFACE FINISH 63
4. SULFURIC ACID ANODIZE PER MIL-A-8625, TYPE IIB, CLASS1.
3. PENETRANT INSPECT PER AES 455 & 551.
2. MATERIAL: ALUMINUM 2219-T852 PER QQ-A-367H.
1. IDENTIFY PER AES 601, METHOD A.

NOTES:

**Figure 2-3**

| QTY REQD PER DASH NO. | ITEM NO. | CODE IDENT | PART OR IDENTIFYING NO. | NOMENCLATURE OR DESCRIPTION | MATERIAL | SPECIFICATION |
|---|---|---|---|---|---|---|
| 1 | 1 | | C105585 | BRACKET | | |

PARTS LIST

UNLESS OTHERWISE SPECIFIED
DIMENSIONS ARE IN INCHES
TOLERANCES
X = ±.030, XX = ±.010
.XXX = ±.005 ANGULAR ± 30'
BREAK SHARP EDGES .003-.015
ALL SMALL FILLETS .020-.040R
THREADS PER FED. HNDBK H-28 AND SUPPLEMENTS
DIMENSIONING PER ANSI Y14.5M-1982
WELD SYMBOLS PER AWS A2.4
SURFACE ROUGHNESS SYMBOLS PER ANSI-B46.1
ALL FINISHED SURFACES 125

| | | |
|---|---|---|
| DRAWN BY | AVE | 9/20/01 |
| CHECKER | | |
| DES. ENG'R | | |
| STRESS ENG'R | AESOLOMA | 10/17/01 |
| PROJ. ENG'R | | |
| MATL. ENG'R | | |
| MFG | J.EHALT | 10/17/01 |
| QUAL. CONTROL | S.M.BERKO | 10/17/01 |
| PROG. MGR | T.VANTASSEN | 10/18/01 |
| REL. FOR FAB. PER E.O. 2122 | | |

NEXT ASSEMBLY
D4852

ARDE, INC.
NORWOOD, N.J.

TITLE
BRACKET

| SIZE | CAGE CODE | |
|---|---|---|
| C | 05980 | C105585 |

SCALE 1:1 | UNIT WT | SHEET 1 OF 1

J/N 39001

C105585 REV A

## 3.0 RESULT

The results of the analysis indicates that PN C4810 Tank Assembly & its mounting brackets C105585 are structurally adequate to the requirements specified in PM 10070 in accordance the design standard of MIL-STD-1522A.

A structural summary of margins is shown in figure 3-1.

**Figure 3-1 Summary of Analytical Results**

| Item | Loading | Margin of Safety | Page No. |
|---|---|---|---|
| Cylinder | MDP | $M.S._y = 1.92$ | 9 |
| | Proof | $M.S._y = 0.46$ | 9 |
| | Burst | $M.S._u = 0.71$ | 9 |
| | Collapse | $M.S._{buckle} = 39.0$ | 11 |
| | Pressure Cycle | M.S. = large | 13 |
| | Fatigue Vibration | M.S. = large | 14 |
| | Fracture Mechanics | | |
| | LBB | M.S. = large | 18 |
| | Safe Life | M.S. = large | 19 |
| Head | MDP | $M.S._y = 3.19$ | 9 |
| | Proof | $M.S._y = 1.09$ | 9 |
| | Burst | $M.S._u = 1.46$ | 9 |
| | Collapse | $M.S._{buckle} = 141$ | 11 |
| Tube | Proof | $M.S._y = 8$ | 30 |
| | Burst | $M.S._u = 9$ | 30 |
| Boss Thread | Tensile | $M.S._y = .33$ | 33 |
| | Torque | $M.S._s = 2.0$ | 33 |
| | Combined Installation | $M.S._y = 0.88$ | 34 |
| | Shear Pullout | $M.S._s = 1.44$ | 35 |
| | Separation | M.S. = 6 | 36 |
| Boss Shoulder | Axial Bearing | $M.S._{bry} = 0.29$ | 36 |
| Bracket | Axial | $M.S._y = 0.47$ | 37 |
| | | $M.S._u = 0.25$ | 37 |
| | Lateral | $M.S._y = 5.75$ | 37 |
| | | $M.S._u = 6.7$ | 37 |
| | Vertical | $M.S._y = 22$ | 37 |
| | | $M.S._u = 19$ | 37 |
| | Fatigue | M.S. = 1.16 | 43 |
| | Fracture Mechanics Life | M.S. = 7.0 | 44 |

**Figure 3-1 Summary of Analytical Results** (cont.)

| Item | Loading | Margin of Safety | Page No. |
|---|---|---|---|
| .25-28 Bolts | Tensile | $M.S._{y} = .35$ | 48 |
| | | $M.S._{u} = .66$ | 48 |
| | Torque | $M.S._{sy} = .79$ | 48 |
| | Combined Installation | $M.S._{sy} = .33$ | 49 |
| | Shear Pullout | $M.S._{sy} = .25$ | 50 |
| | | $M.S._{su} = .80$ | 50 |
| | Separation | M.S. = 5.9 | 51 |
| | Friction | M.S. = .73 | 51 |
| | | Result | Page |
| Weight | Tank/Bracket Assembly | 2.40 lb max | 52 |
| Volume | | 62.4 > 61.03 cu. in. | 52 |

## 4.0 ANALYSIS

### 4.1 Materials Data

From MIL-HBK-5, ref. 4:

| | Yield Strength, $F_{ty}$ | | Ultimate Strength, $F_{tu}$ | |
|---|---|---|---|---|
| | RT | 150°F | RT | 150°F |
| CRES 321, Annealed | 30 ksi | 26 ksi | 70 ksi | 61 ksi |
| CRES 304L, Annealed | 30 ksi | 26 ksi | 70 ksi | 61 ksi |
| Aluminum 2219-T852 | 39 ksi | 37 ksi | 56 ksi | 53 ksi |

### 4.2 Summary of Loads

Pressure Loading:

MDP = 300 psi

Proof = 450 psi

Burst = 1200 psi

Pressure Cycle:

| | Tank | System | Contingency | Total |
|---|---|---|---|---|
| Proof = | 1 | 1 | 2 | 4 |
| MDP = | | | | 3000 |

Random Vib.

| | |
|---|---|
| Axial | 8.9 grms at .07 g^2/hz |
| Lateral | 4.5 grms at .02 g^2/hz |
| First Mode | >50 Hz |

## 4.3 Tank

### 4.3.1 Pressure Analysis

The finite structural analysis used the ABAQUS computer code, ref. 5. Figure 4.3.1-1 shows the stress contour plot of the cylindrical tank at a proof pressure of 600 psi which is greater than the 450 psi requirement. The analysis used the elastic (linear) option, hence stresses at MDP and burst can be ratioed from the proof pressure case. From figure 4.3.1-1, the margins of safety of the design are:

Cylinder region

Proof, $M.S._y = 26 / 17.8 - 1 = .46$

MDP, $M.S._y = 26 / (17.8 \times 300/600) - 1 = 1.92$

Burst, $M.S._u = 61 / (17.8 \times 1200/600) - 1 = .71$

Head Region

Proof, $M.S._y = 26 / 12.4 - 1 = 1.09$

MDP, $M.S._y = 26 / (12.4 \times 300/600) - 1 = 3.19$

Burst, $M.S._u = 61 / (12.4 \times 1200/600) - 1 = 1.46$

ABAQUS

**Figure 4.3.1-1 Cylinder Tank Assembly C4810 at 600 psi Proof Pressure**

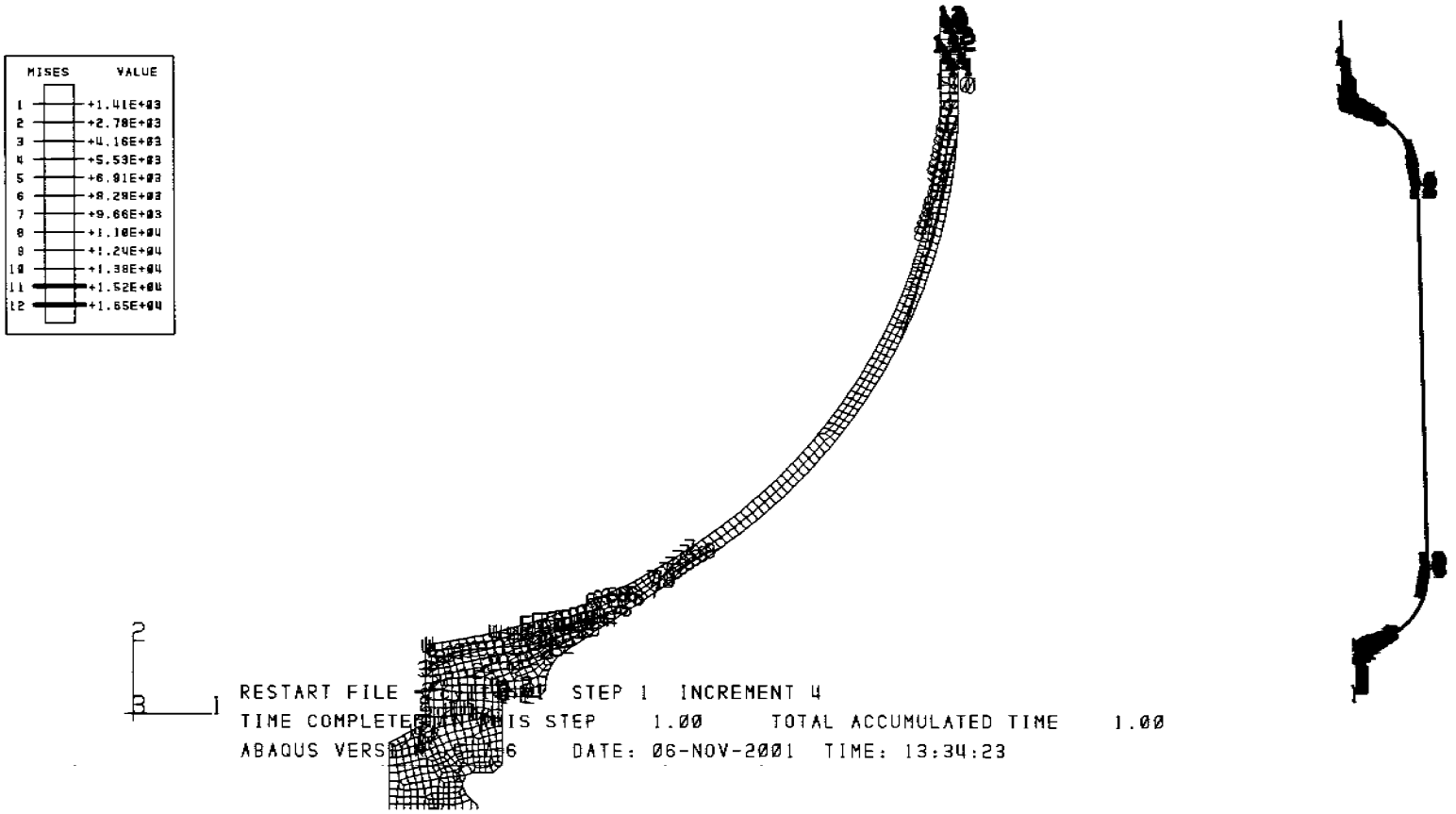


01

4.3.2 Buckling

Cylinder

Effective length = 7.6 + 2/3 x 3 = 9.6

L/R = 9.6/1.5 = 6.4

D/t = 3/.044 = 68

From figure 4.3.2-1, K = 6.5

Critical pressure, Pcr = KE(t/D)^3

= 6.5 x 27000000 x (.044/3)^3

= 553 psid

$M.S._{buckling}$ = 553/14.7 - 1 = 36

Head

From Roark, ref. 6:

Critical pressure, Pcr = .365E(t/D)^2

= .365 x 27000000 x (.044/3)^2

= 2100 psid

$M.S._{buckling}$ = 2100/14.7 - 1 = 141

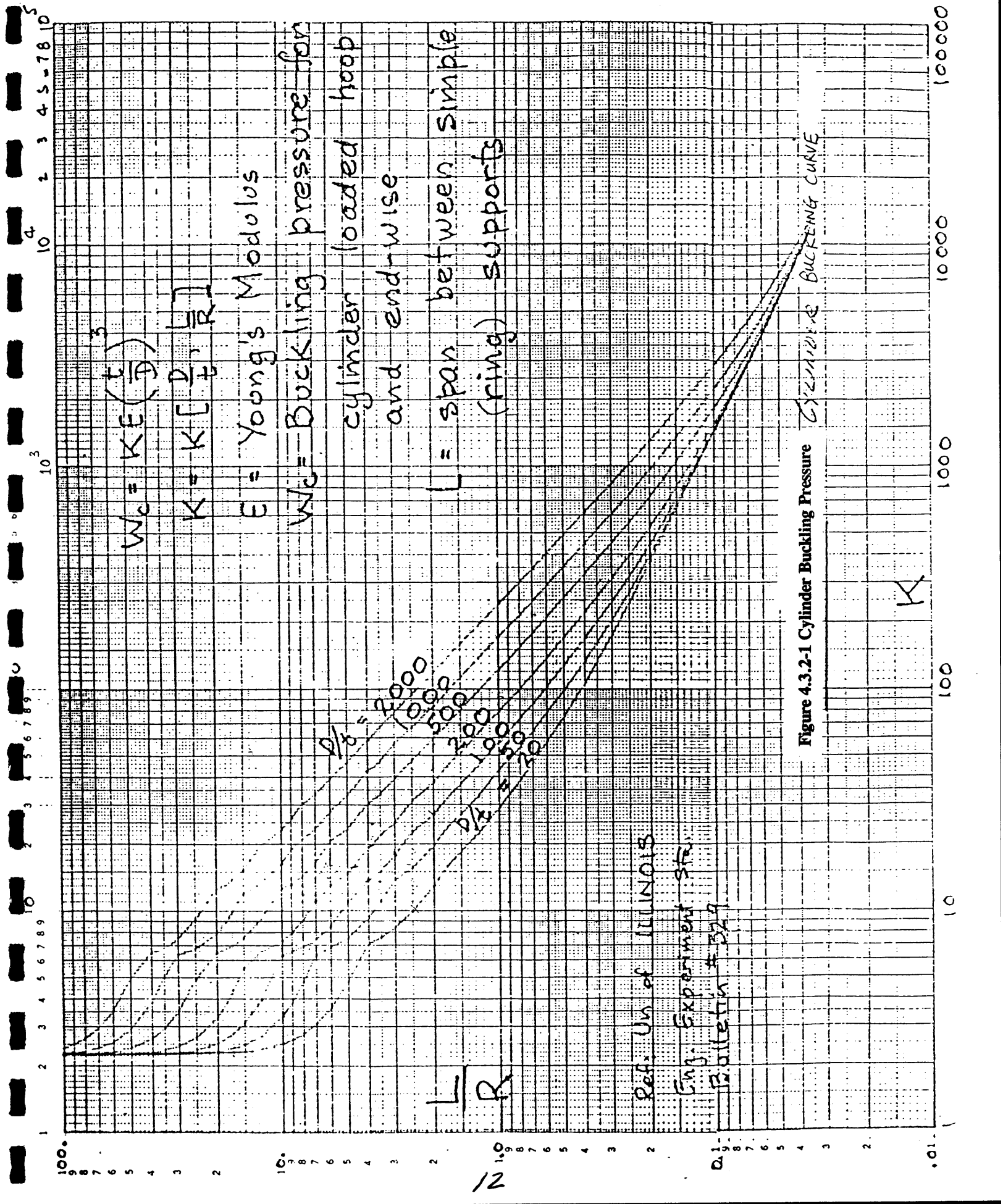


**Figure 4.3.2-1 Cylinder Buckling Pressure**

4.3.3 Pressure Cycle Fatigue Analysis

At $\sigma_{proof}$ = 17.8 ksi from ref. 7 for CRES 304L & 321, SN curve, Ni = infinite life

$\sigma_{MDP}$ = 8.9 ksi from ref. 7 for CRES 304L & 321, SN curve, Ni = infinite life

Fatigue damage, U = $\Sigma$ni/Ni = 4/infinite + 3000/infinite = 0.000 x 4 factor = 0.000

M.S. $_{fatigue}$ = .8/0.0 - 1 = large

4.3.4 Fatigue Vibration & Tank Natural Frequency

The natural frequencies were determined through the use of the unit load cases. The tank axial natural frequency is 1425 hz with a random vibration response of 27 g at 3 sigma. The tank lateral natural frequency is 305 hz with a random vibration response of 33.0 g at 3 sigma. These figures presumed full mass participation of the contained gas. The above natural frequencies are greater than the 60 hz requirement specified in ref. 1. Calculation is shown below:

Tank Axial

Unit load = 38 lb axial

axial displacement = 0.000048228 in.

Stiffness, K = 38/.0013330 = 787924 lb/in.

Natural frequency, Fnx = $(1/2\pi)$ $(\sqrt{Kg/W})$ where g = 386.4

W = 1.9 lb tank + 1.9 lb gas = 3.8 lb

= $(1/2\pi)$ $(\sqrt{787924 \times 386.4/3.8})$ = 1425 hz

Response load, Ae = 3 sigma x 8.9 grms = 27 g peak

Tank Lateral

Unit load = 38 lb lateral

Lateral displacement = 0.00016057"

Stiffness, K = 38/.00016057 = 236657 lb/in.

Natural frequency, Fny = $(1/2\pi)$ $(\sqrt{Kg/W})$ where g = 386.4

W = 1.9 lb tank + 1.9 lb gas = 3.8 lb

$= (1/2\pi)$ $(\sqrt{236657 \times 386.4/3.8}) = 780$ hz

Response load, Ae = 3 sigma x 4.5 grms = 13.5 g peak

The 10g unit load responses of the tank are shown in figure 4.3.4-1 for tank axial acceleration and figure 4.3.4-2 for tank lateral acceleration. Based on the results, the alternating stresses at 3 sigma are insignificant with the values of:

$\sigma$ alt. = .48/10 g x 27 = $\pm$ 1.3 ksi in axial acceleration

$\sigma$ alt. = .38/10 g x 13.5 = $\pm$ 0.5 ksi in lateral acceleration

Above 3 sigma peak alternating stress responses are well below the endurance limit of $\pm$ 40 ksi for annealed CRES material, ref. 7. Using Miner's Law for Cumulative Fatigue Damage of:

$U.F. = \Sigma^{k}_{i=1} \; n_i/N_i$

where:

$n_i$ = number of exposure cycles at a Stress Ratio (SR) associated with a particular load condition at 3 minutes per axis.

$N_i$ = material fatigue capability at the applied SR for the load condition

k = number of load conditions

Total Fatigue damage, U = 4 proof/infinite + 3000 MDP/infinite

+1425 x 3 x 60 (MDP +Axial) /infinite

+ 780 x 3 x 60 (MDP+Lateral)/infinite = 0.00

ABAQUS

**Figure 4.3.4-1 Cylinder Tank at 10G Axial Acceleration**

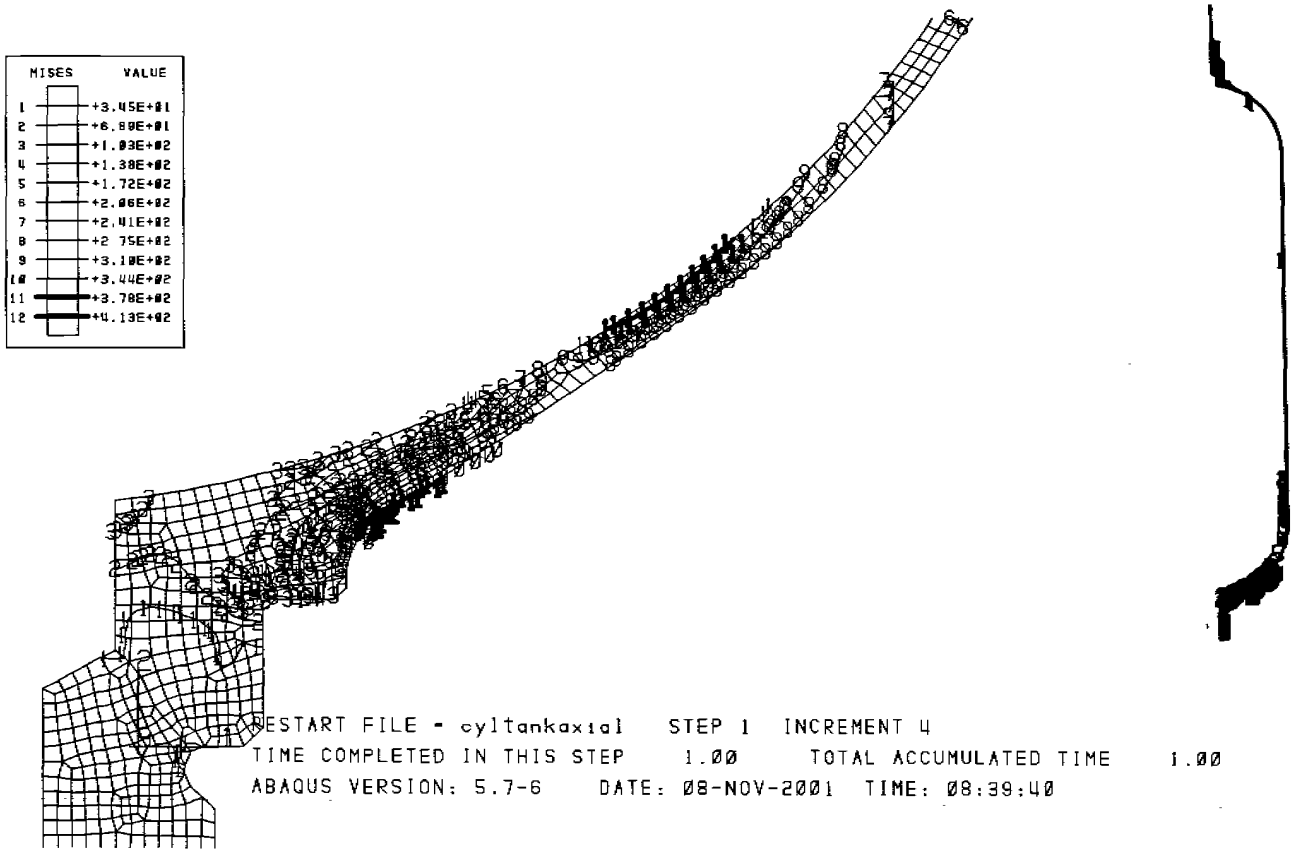

ABAQUS

**Figure 4.3.4-2 Cylinder Tank at 10G Lateral Acceleration**

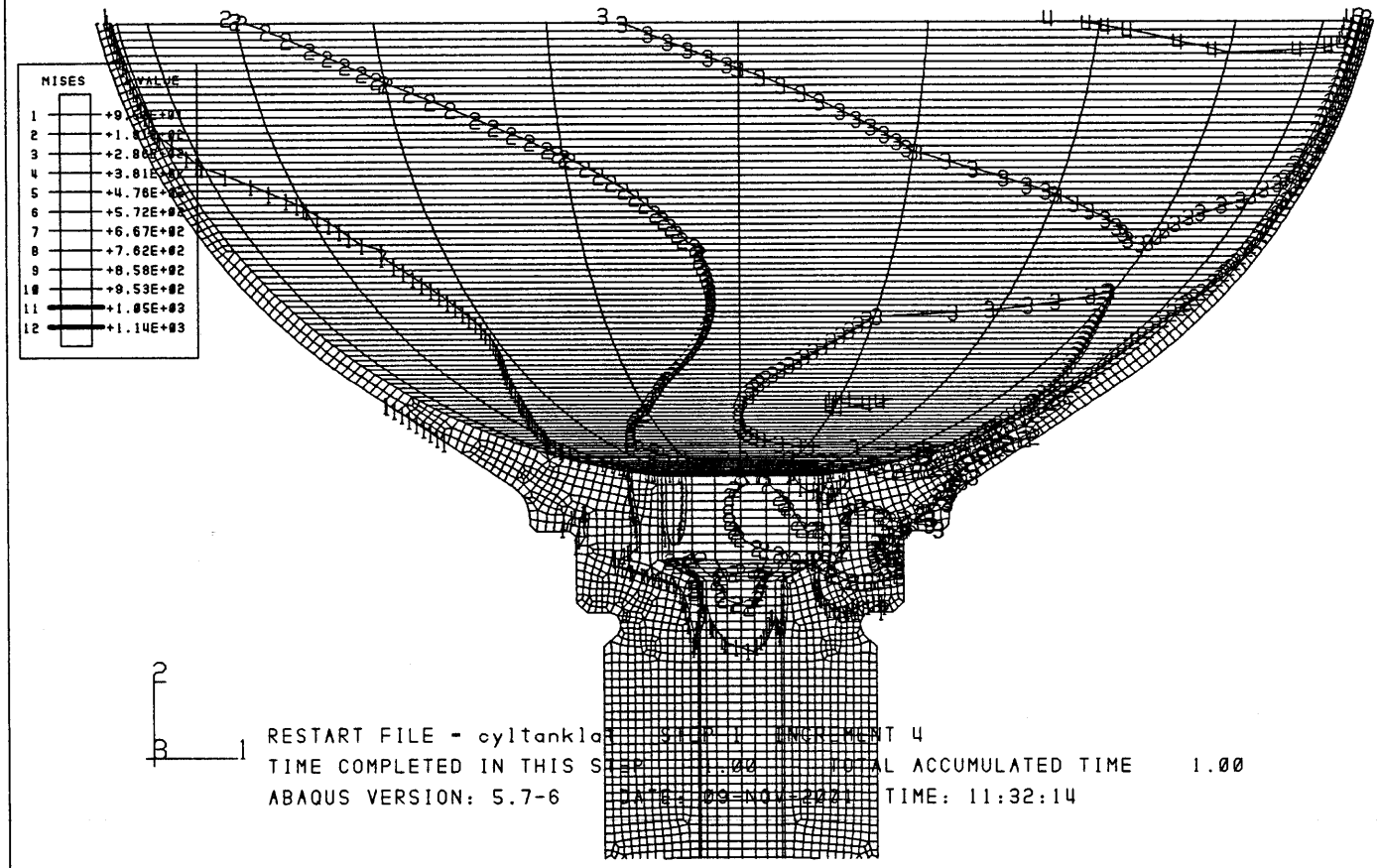

4.3.5 Fracture Mechanics

The NASA/FLAGRO Fatigue Crack Growth Program (Ref. 8) was used to validate the Cylinder Tank Assembly C4810 by showing harmful flaw growth will not occur during pressure cycling loading and by demonstrating leak-before-burst failure mode. Alternating stresses from vibration are insignificant resulting in applied stress intensities below the threshold stress intensity level, hence crack growth under the vibration environment were not included in the FLAGRO runs.

The fracture mechanics analysis is performed according to the guidelines of MIL-STD-1522A, ref. 3. The analytical methods, material properties, and range of flaw shapes used are consistent with the requirements of these specifications.

4.3.5.1 LEAK BEFORE BURST

From fracture mechanics theory, the criterion for a "leak before burst" failure mode is:

$K_a/K_C < 1$

where $K_a$ = applied stress intensity

$K_C$ = 300 ksi$\sqrt{in}$ critical stress intensity from NASA/FLAGRO material property database.

A leak before burst failure mode must be demonstrated at MDP for all rational flaw sizes to insure safe operation. Standard practice per the requirements of MIL-STD-1522A is to evaluate the stability of a through crack with a length (2C) equal to ten times the maximum wall thickness. If the stress intensity at pressures up to and including MDP, then LBB is demonstrated. The result shows that the Cylinder Tank Assembly C4810 demonstrates LBB.

STRESS INTENSITY SOLUTION CHECK FOR TC01

DATE: 08/12/81 TIME: 02:31:58
(computed: NASA/FLAGRO Version 2.03, March 1995.)
U.S. customary units [inches, ksi, ksi sqrt(in)]

Plate Thickness, t = 0.0540
" Width, W = 10.0000

Material Yield Stress = 40.00

S0: Tensile Stress
S0 = 10.20

S1: Bending Stress
S1 = 0.0000

| c | K | Snet | Sn/Sy |
|---|---|---|---|
| 0.2700 | 9.4111 | 10.782 | 0.270 |

$$M.S._{LBB} = \frac{300}{9.4} - 1 = \underline{\text{large}}$$

4.3.5.2 Safe-Life

Safe-life is performed in the highest stress cylinder to head weld region. The starting crack sizes used for the cylinder membrane and boss-head weld are the standard values for penetrant inspection at a/c=.2 and approximately 10% above 2c=.076 special level FPI detection capability. Radiographic (X-ray) detection at 0.7 of wall thickness is identified as standard level. Given the relatively thin wall of the mixing bottle, special level x-ray is applied. The starting flaws for analysis purposes are:

| | a/c = .2 | a/c = 1.0 |
|---|---|---|
| a | .025 | 0.0378 |
| c | .1250 | 0.0378 |

The effect of external loading from vibration are not included since the values are insignificant and are well below the threshold stress intensity for crack growth. The stability of a surface flaw at end of a life is evaluated by comparison of the maximum applied stress intensity to a conservative lower bound estimate of the surface flaw stability limit. Conservatively a multiplier of 0.85 is applied to the plain strain fracture toughness ($K_{Ic}$) for the material to establish this $K_{Ie}$ limit. Prior application history/testing of 300 series CRES has shown no incompatibility (significant toughness reduction) with $CO_2$ or Xenon as a service fluid. The surface flaw stability Margin of Safety is defined as $M.S._{\infty} = K_{IE}/K_a - 1$. Significant margin exist at proof and at MDP. Results of the analysis are summarized below with the NASGRO input/output data shown in subsequent pages:

| Starting Flaw (a x 2c) | Size after 4th Life (a x 2c) | Ka @ 4th Life (16th Proof) (Ksi√in) | MS | Ka @ 5th Life (12001MDP) (Ksi√in) | MS |
|---|---|---|---|---|---|
| .025x.2500 | .0251x.2500 | 8.3 | +19 | 4.2 | +39 |
| .0378x.0756 | .0378x.0756 | 6.3 | +25 | 3.17 | +52 |

FATIGUE CRACK GROWTH ANALYSIS

DATE: 08/12/81 TIME: 02:21:26
(computed: NASA/FLAGRO Version 2.03, March 1995.)
U.S. customary units [inches, ksi, ksi sqrt(in)]

PROBLEM TITLE

MIT Cylinder Safe Life

GEOMETRY

MODEL: SC01-Surface crack (2D) in finite width plate

Plate Thickness, t = 0.0440
" Width, W = 10.0000

FLAW SIZE:

a (init.) = 0.2500E-01
c (init.) = 0.1250
a/c (init.) = 0.2000

MATERIAL

MATL 1: AISI 304/304L
Ann sht & plt, cast

Material Properties:

| Matl: No. | UTS | YS | K1e | K1c | Ak | Bk | Thk | Kc | KIscc |
|---|---|---|---|---|---|---|---|---|---|
| 1 | 90.0 | 40.0 | 280.0 | 200.0 | 1.00 | 0.50 | 0.044 | 300.0 | |

| Matl: No. | Crack Growth Eqn Constants C | n | p | q | DKo | Rcl | Alpha | Smax/SIGo |
|---|---|---|---|---|---|---|---|---|
| 1 | 0.600E-09 | 3.000 | 0.25 | 0.25 | 3.50 | 0.70 | 2.50 | 0.30 |

MIT Cylinder Safe Life
MODEL: SC01

FATIGUE SCHEDULE BLOCK STEP DESCRIPTIONS

MIT Cylinder Load Spectrum

| STEP | MAT | NUMBER OF FATIGUE CYCLES | Description of steps |
|---|---|---|---|
| 1: | 1: | 4.00 | :PROOF |
| 2: | 1: | 3000.00 | :MDP |

MIT Cylinder Safe Life
MODEL: SC01

FATIGUE SCHEDULE BLOCK STRESS TABLE

MIT Cylinder Load Spectrum

| STEP | MATL | NUMBER OF FATIGUE CYCLES | S0 (ksi) (t1) | S0 (ksi) (t2) | S1 (ksi) (t1) | S1 (ksi) (t2) |
|---|---|---|---|---|---|---|
| 1: | 1: | 4.00 | 20.30: | 0.00: | 0.00: | 0.00: |
| 2: | 1: | 3000.00 | 10.20: | 0.00: | 0.00: | 0.00: |

Environmental Crack Growth Check for Sustained Stresses
(Kmax less than KIscc): NOT SET

MIT Cylinder Safe Life
MODEL: SC01

ANALYSIS RESULTS:
---

| Schdl | Block | Step | Final Flaw Size a | Final Flaw Size c | K max a-tip | K max c-tip |
|---|---|---|---|---|---|---|
| 1 | 1 | 1 | 0.025000 | 0.125000 | 8.277367 | 4.56449 |
| 1 | 1 | 2 | 0.025034 | 0.125000 | 4.164124 | 2.29939 |
| 2 | 1 | 1 | 0.025035 | 0.125000 | 8.284209 | 4.57248 |
| 2 | 1 | 2 | 0.025069 | 0.125000 | 4.167566 | 2.30342 |
| 3 | 1 | 1 | 0.025069 | 0.125000 | 8.291057 | 4.58049 |
| 3 | 1 | 2 | 0.025104 | 0.125000 | 4.171012 | 2.30748 |
| 4 | 1 | 1 | 0.025104 | 0.125000 | 8.297912 | 4.58854 |
| 4 | 1 | 2 | 0.025138 | 0.125000 | 4.174461 | 2.31154 |

FINAL RESULTS:
Critical Crack Size has NOT been reached.
at Cycle No. 3000.00 of Load Step No. 2
Step description: MDP
of Block No. 1 of Schedule No. 4
Crack Sizes: a = 0.251385E-01 , c = 0.125000 , a/c = 0.20110

$$M.S._{SCC\ @\ PROOF} = \frac{200 \times .85}{8.3} - 1 = \frac{Large}{19}$$

MIT Cylinder Safe Life
MODEL: SC01

ANALYSIS RESULTS:
---

| Schdl | Block | Step | Final Flaw Size a | Final Flaw Size c | K max a-tip | K max c-tip |
|---|---|---|---|---|---|---|
| 5 | 1 | 1 | 0.025139 | 0.125000 | 8.304773 | 4.59662 |
| 5 | 1 | 2 | 0.025173 | 0.125000 | 4.177913 | 2.31563 |
| 6 | 1 | 1 | 0.025174 | 0.125000 | 8.311640 | 4.60473 |
| 6 | 1 | 2 | 0.025208 | 0.125000 | 4.181369 | 2.31972 |
| 7 | 1 | 1 | 0.025209 | 0.125000 | 8.318514 | 4.61287 |
| 7 | 1 | 2 | 0.025243 | 0.125000 | 4.184827 | 2.32384 |
| 8 | 1 | 1 | 0.025244 | 0.125000 | 8.325394 | 4.62104 |
| 8 | 1 | 2 | 0.025279 | 0.125000 | 4.188288 | 2.32796 |

FINAL RESULTS:
Critical Crack Size has NOT been reached.
at Cycle No. 3000.00 of Load Step No. 2
Step description: MDP
of Block No. 1 of Schedule No. 8
Crack Sizes: a = 0.252787E-01 , c = 0.125000 , a/c = 0.20222

$$M.S._{SCC} = \frac{200 \times .85}{4.2} - 1 = \text{large}$$
$$39$$

FATIGUE CRACK GROWTH ANALYSIS

DATE: 09/03/81 TIME: 05:08:37
(computed: NASA/FLAGRO Version 2.03, March 1995.)
U.S. customary units [inches, ksi, ksi sqrt(in)]

PROBLEM TITLE

MIT Cylinder Safe Life

GEOMETRY

MODEL: SC01-Surface crack (2D) in finite width plate

Plate Thickness, t = 0.0440
" Width, W = 10.0000

FLAW SIZE:

a (init.) = 0.3780E-01
c (init.) = 0.3780E-01
a/c (init.) = 1.000

MATERIAL

MATL 1: AISI 304/304L
Ann sht & plt, cast

Material Properties:

| Matl: No. | UTS | YS | K1e | K1c | Ak | Bk | Thk | Kc | KIscc |
|---|---|---|---|---|---|---|---|---|---|
| 1 | 90.0 | 40.0 | 280.0 | 200.0 | 1.00 | 0.50 | 0.044 | 300.0 | |

| Matl: No. | Crack Growth Eqn Constants C | n | p | q | DKo | Rcl | Alpha | Smax/SIGo |
|---|---|---|---|---|---|---|---|---|
| 1 | 0.600E-09 | 3.000 | 0.25 | 0.25 | 3.50 | 0.70 | 2.50 | 0.30 |

MIT Cylinder Safe Life
MODEL: SC01

FATIGUE SCHEDULE BLOCK STEP DESCRIPTIONS

MIT Cylinder Load Spectrum

| STEP | MAT | NUMBER OF FATIGUE CYCLES | Description of steps |
|---|---|---|---|
| 1 | 1 | 4.00 | Proof |
| 2 | 1 | 3000.00 | MDP |

MIT Cylinder Safe Life
MODEL: SC01

FATIGUE SCHEDULE BLOCK STRESS TABLE

MIT Cylinder Load Spectrum

| STEP | MAT | NUMBER OF FATIGUE CYCLES | S0 (ksi) (t1) | S0 (ksi) (t2) | S1 (ksi) (t1) | S1 (ksi) (t2) |
|---|---|---|---|---|---|---|
| 1: | 1: | 4.00 | 20.30: | 0.00: | 0.00: | 0.00: |
| 2: | 1: | 3000.00 | 10.20: | 0.00: | 0.00: | 0.00: |

Environmental Crack Growth Check for Sustained Stresses
(Kmax less than KIscc): NOT SET

MIT Cylinder Safe Life
MODEL: SC01

ANALYSIS RESULTS:
---

| Schdl | Block | Step | Final Flaw Size a | Final Flaw Size c | K max a-tip | K max c-tip |
|---|---|---|---|---|---|---|
| 1 | 1 | 1 | 0.037800 | 0.037800 | 4.848127 | 6.30106 |
| 1 | 1 | 2 | 0.037800 | 0.037800 | 2.436002 | 3.16605 |
| 2 | 1 | 1 | 0.037800 | 0.037800 | 4.848136 | 6.30108 |
| 2 | 1 | 2 | 0.037800 | 0.037800 | 2.436007 | 3.16605 |
| 3 | 1 | 1 | 0.037800 | 0.037800 | 4.848145 | 6.30109 |
| 3 | 1 | 2 | 0.037800 | 0.037800 | 2.436011 | 3.16606 |
| 4 | 1 | 1 | 0.037800 | 0.037801 | 4.848153 | 6.30110 |
| 4 | 1 | 2 | 0.037800 | 0.037801 | 2.436016 | 3.16607 |

FINAL RESULTS:
Critical Crack Size has NOT been reached.
at Cycle No. 3000.00 of Load Step No. 2
Step description: MDP
of Block No. 1 of Schedule No. 4
Crack Sizes: a = 0.378003E-01 , c = 0.378005E-01 , a/c = 0.99999

$$M.S._{SCC\ @\ Prod} = \frac{200 \times .85}{6.3} - 1 = +25$$

MIT Cylinder Safe Life
MODEL: SC01

ANALYSIS RESULTS:
---

| Schdl | Block | Step | Final Flaw Size a | Final Flaw Size c | K max a-tip | K max c-tip |
|---|---|---|---|---|---|---|
| 5 | 1 | 1 | 0.037800 | 0.037801 | 4.848162 | 6.30112 |
| 5 | 1 | 2 | 0.037800 | 0.037801 | 2.436020 | 3.16607 |
| 6 | 1 | 1 | 0.037800 | 0.037801 | 4.848171 | 6.30113 |
| 6 | 1 | 2 | 0.037800 | 0.037801 | 2.436025 | 3.16608 |
| 7 | 1 | 1 | 0.037801 | 0.037801 | 4.848180 | 6.30114 |
| 7 | 1 | 2 | 0.037801 | 0.037801 | 2.436029 | 3.16609 |
| 8 | 1 | 1 | 0.037801 | 0.037801 | 4.848189 | 6.30115 |
| 8 | 1 | 2 | 0.037801 | 0.037801 | 2.436034 | 3.16609 |

FINAL RESULTS:
Critical Crack Size has NOT been reached.
at Cycle No. 3000.00 of Load Step No. 2
Step description: MDP
of Block No. 1 of Schedule No. 8
Crack Sizes: a = 0.378006E-01 , c = 0.378011E-01 , a/c = 0.99998

$$M.S._{SCC@MDP} = \frac{200 \times .85}{3.17} - 1 = +52$$

4.3.6 Tube Analysis

At a = .1275, b = .1015 at wall of .026 min.

p = 300 psi at MDP, 600 psi at proof, & 1200 psi at burst

Stress, s1 = pb^2/(a^2-b^2) = 519 psi

Stress, s2 = p (a^2+b^2)/(a^2-b^2) =1338 psi

Stress, s1 = -300 psi

Effective stress, σ = (.5 x ((s1-s2)^2 + ((s2-s3)^2 + (s3-s1)^2))^.5 = 1418 psi at MDP

σ =2836 psi at proof

σ =5672 psi at burst

For CRES 304L, Annealed Tubing at 150°F:

Allowable Yield Strength, Fty = 26 ksi

Allowable Ultimate Strength, Ftu =61 ksi

Therefore, margins of safety are:

M.S.y (at MDP) = 26/1.4 - 1 = +17

M.S.y (at proof) = 26/2.8 - 1 = +8

M.S.u (at burst) = 61/5.7 - 1 = +9

4.3.7 Thread

Torque for 0.625-18 UNF Thread at the Liquid Outlet Port

torque of $T_{max}$ = 30 ft-lb x 12 = 360 in-lb.

$T_{min}$ = 25 ft-lb x 12 = 300 in-lb.

Per NSTS 08307(reference 8) for Max & Min Preload calculation by Typical Coefficient Method:

Preload max, $PLD_{max} = (1+\tau)T_{max}/(KxD) + P_{ther}(pos)$

Preload min, $PLD_{min} = ((1+\tau)T_{min} - T_p)/(KxD) + P_{ther}(neg) - P_{loss}$

where $\tau$ = uncertainty factor in torque measurement = ± 25%

K = torque factor = .2

$P_{ther}$=thermal loss = +548 lb & -1196 lb (see next pg)

$T_p$ = prevailing torque = 0

D = .625

$P_{loss}$ = 5% x $PLD_{max}$

$PLD_{max} = (1+.25)(360)/(.2)(0.625) + 548 = 4148$ lb.

$PLD_{min} = (1-.25)(300)/(.2)(0.625) - 1196 - .05\ (4148)$

= 400 lb.

Spring rate of CRES tank thread, $K_t$:

$Kt = E_t A_t/L_t$ where $E_t = 27 \times 10^6$ psi

$A_t = (\pi/4)(.559^2 - .194^2) = .2158$ in² (tensile area)

$L_t$ = .25 in.

$K_t = 27x10^6(.2158)/.25 = 23.3 \times 10^6$ lb/in

Spring rate of mounting face, $K_f$, made of Aluminum:

at $E_f = 10x10^6$ psi

$A_f = (\pi/4)(0.960^2-0.750^2) = 0.282$ in$^2$

$L_f = .25$ in.

$K_f = 10x10^6$ (.282)/.25 = 11.3 x $10^{-6}$ lb/in

Temperature effect on preload:

$$P_{ther} = (\alpha_f-\alpha_l)(K_l)(K_f)(\Delta T)(L)/(K_l+K_f)$$

Where $\alpha_l$ = Aluminum ther. coefficient = $12.4x10^{-6}$ in/in/°F at 150°F

= $11.6x10^{-6}$ in/in/°F at -100°F

$\alpha_T$=CRES ther. coefficient = $8.8x10^{-6}$ in/in/°F at 150°F

= $7.9x10^{-6}$ in/in/°F at -100°F

At high temperature of 150°F, assuming tank was installed at 70F

$\Delta T$= (150-70) = 80 at 150°F

$P_{ther}$ = (12.4-8.8)(23.3)(11.3)(80)(.25)/(23.3+11.3)

= 548 lb.

At low temperature of -100°F, assuming tank was installed at 70F

$\Delta T$= (-100-70) = -170 at 0°F

$P_{ther}$ = (11.6-7.9)(23.3)(11.3)(-170)(.25)/(23.3+11.3)

= -1196 lb.

External load to the tank:

Axial Pressure load = $(\pi/4)(.194)^2(300)$ = 9 lb.

Axial, $F_x$ = Wg = 3.8 (27) = 103 lb (at 1 G = 3.8 lb)

Total axial load = 9 + (103 x 1.10) = 123 lb (Limit)

= (9 x 2) + (103 x 1.50) = 172.5 lb (ultimate)

Load allowables due to tension load, $_{Pat}$: $A_t$ = .2158 sq. in.

$F_{ty}$= 30 x .87 = 26 ksi

$F_{tu}$ = 70 x .87 = 61 ksi

$F_{su}$ = 50 x .87 = 43 ksi

$F_{bry}$ = 50 x .87 = 43 ksi

Yld load, $PA_{ty}=A_t xF_{ty}$ = 5611 lb.

Ult. Load, $PA_{tu}=A_t xF_{tu}$ = 13164 lb.

a1) Tensile load

Axial thread load, $Pt=PLD_{max}+n\phi(SFxP_i)$

where n = loading plane factor = 1.0

$\phi$ = stiffness load factor = $K_f/(K_t+K_f)$

= 23.3/(23.3+11.3) = .67

Therefore Pt axial load and margin of safety at:

Limit load, $P_t$ = 4148 + (1.0)(.67)(123)

= 4230 lb

Ultimate load, $P_t$ = 4148 + (1.0)(.67)(172.5)

= 4264 lb

$M.S._{.y}$ = 5611/4230 - 1 = + .33

$M.S._{.u}$ = 13164/4264 - 1 = +2.08

a2) Twisting torque shear, $\tau = T_{max}$ (r/J)

where r = .550/2 = .275

$J = (\pi/32)(.550^4-.194^4) = .0088445\ in^4$

$\tau$ = 360 x .275/.0088445 = 11.2 ksi

At $F_{sy}$ = 50 ksi x .67 = 33.5 ksi shear yield of CRES

$M.S._{.sy}$ = 33.5/11.2 - 1 = +2.0

Combined stress during application of torque:

During installation of the tank, a torque applied of 360 in-lb max is analyzed to verify that there is no detrimental yielding of the tank thread. The relationship below must be hold true for the maximum preload per NSTS 08307:

$(R_a+R_b)^2 + R_s^3 \leq 1$

where $R_a$ = the max. ratio of axial load to axial allowable

$= (SF \times P)/PA_{ty}$; $Pt/PA_{ty}$; $PLD_{max}/PA_{ty}$

$= (SF \times P)/PA_{ty} = 172.5/5611 = .03$

$= Pt/PA_{ty} = 4230/5611 = .75$

$= PLD_{max}/PA_{ty} = 4148/5611 = .74$

Therefore use $R_a = .75$

$R_b$ = ratio of bending load to bending load allowable.

Bending stress, $\sigma_b = Mc/I$ at 30 lb for 30 ft-lb.

$M = 30 \times .625" = 19$ in-lb

$\sigma_b = 19 \times .275/(.0088445/2) = 1.2$ ksi

$R_b = 1.2/30 = .04$

$R_s$ = ratio of shear load to shear load allowable

$= 11.2/33.5 = .33$

$(R_a+R_b)^2 + R_S^3 < 1 = (.75 + .04)^2 + .33^3 = .53 < 1$

$M.S._s = 1/.53 - 1 = 0.88$

Therefore combined stress due to the initial torque is not critical.

a3) Shear Pullout stress of thread:

from NSTS 08307:

For CRES, 0.625-18 UNF external thread,

Ext. shear area, $A_{se} = \pi L_e K_i^{max} (.75-.57734 n_o(TK_i+TE_e+G_e))$

where Le = length of thread engagement = .29 min.

$K_i^{max}$ = minor dia. of int. thread = .5589

$TK_i$ = tol. on minor dia. of int. thread = .008

$TE_e$ = tol. on pitch dia. of ext. thread = .0035

$G_e$ = wear allowable = say .001

$n_o$ = thread per inch = 18

$A_{se} = \pi(.29)(.5589)(.750-.57735(18)(.008+.0035+.001))$

$= 0.3157 \text{ in}^2$

Axial load allowable for thread shear, $P_{se}$:

$PA_s = A_{se} \times F_s$ where $F_{sy}$ = 28 shear yield

$F_{su}$ = 43 ksi shear ultimate

$PA_{sy} = .3157 \times 28000 = 8840$ lb shear yield allowable

$PA_{su} = .3157 \times 43000 = 13575$ lb shear ult. allowable

$M.S._{sy} = 8840/3623 - 1 = +1.44$

$M.S._{su} = 13575/3656 - 1 = +2.71$

a4) Joint Separation load, $P_{sep}$:

$P_{sep} = P \times SF_{sep}$

Axial bolt load, $P_t = Pld_{min} + n\phi P_{sep}$

where $PLD_{min} = 400$ lb

$n = 1.0$

$\phi = .67$

$P_{sep} = 172.5$ lb total axial reaction load (ultimate)

$P_t = 400 + (1.0)(.67)(172.5)$

$= 516$ lb $< PA_{ty} < 5611$ lb

for case #1 from NSTS 08307 where $P_{tu} < PA_{ty}$:

$M.S._{sep} = (PLD_{min}/(1-n\phi)P_{sep}) - 1$

$= (400/(1-(1)(.67)(172.5)) - 1$

$= 6$

a5) Bearing on boss shoulder:

$A_b = (\pi/4)((.955 - 2 \times .02)^2 - (.751 + 2 \times .035)^2) = .128$ sq. in.

Bearing stress, $\sigma_{br} = 4264/.128 = 33.3$ ksi ultimate

$= 4230/.128 = 33.0$ ksi limit

@ $F_{bry} = 43$ ksi for CRES tank & 64 ksi Al 2219-T852

$M.S._y = 43/33.3 - 1 = 0.29$ $M.S._y = 64/33.3 - 1 = .92$

Therefore assumption of torque values to install the nut is adequate.

## 4.4 Mounting Bracket

### 4.4.1 Structural Analysis

Finite element analysis performed on the bracket C105585 using ABAQUS computer code showed that the bracket is structurally adequate to support the C4810 tank in the AMS 02 launch environment. Both brackets are identical in shape but only one (fixed end) supports the full axial load. The two brackets share the lateral load.

The bracket was analyzed with an equivalent 10g unit load of 3.8 lb/g (1.9 lb tank + 1.9 lb gas) in axial, lateral, and vertical directions. The unit load applied in lateral and vertical directions are half of the total load since each bracket supports half of the load. Von mises stress contour plots from each case at 10 g unit load are shown in figures 4.4-1, 4.4-2, & 4.4-3. At a 3 sigma peak of the random vibration spectrum, the stress responses on the bracket are:

Axial Load Stress, $\sigma$ = 4.6 ksi/10 g x 8.9 grms x 3 = $\pm$12.3 ksi

Lateral Load Stress, $\sigma$ = 1.1 ksi/10 g x 8.9 grms x 3 = $\pm$3 ksi

Vertical Load Stress, $\sigma$ = 1.5 ksi/10 g x 8.9 grms x 3 = $\pm$4 ksi

The Al 2219-T852 bracket material properties at 150°F from MIL-HDBK-5, ref. 7, are:

Fty = 40 x .96 = 38 ksi  Ftu = 53 x .98 = 52 ksi

Margins of safety at 1.1 factor for yield and 1.25 for ultimate:

Axial M.S.y = 38 / (12.3 x 1.1) - 1 = 1.8

M.S.u = 52 / (12.3 x 1.5) - 1 = 1.82

Lateral M.S.y = 38 / (3 x 1.1) - 1 = 10.5

M.S.u = 52 / (3 x 1.5) - 1 = 10.5

Vertical M.S.y = 38 / (4 x 1.1) - 1 = 7.6

M.S.u = 52 / (4 x 1.5) - 1 = 7.6

ABAQUS

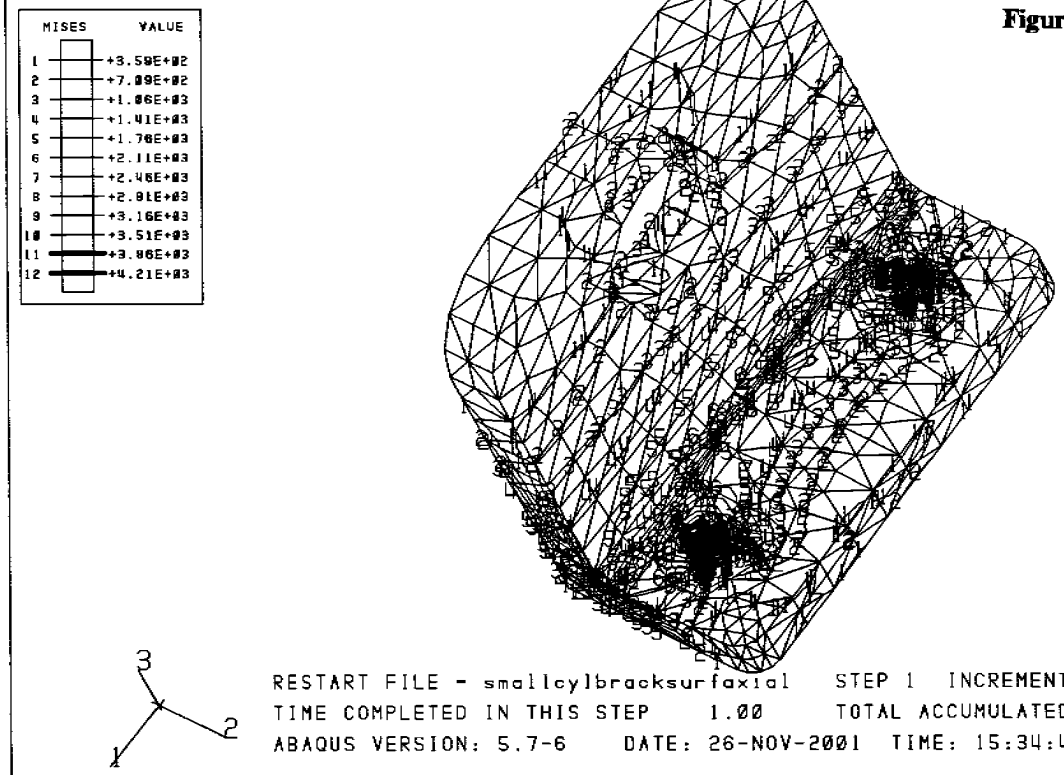


**Figure 4.4-1 Bracket C105585 at 10G Axial Acceleration**

ABAQUS

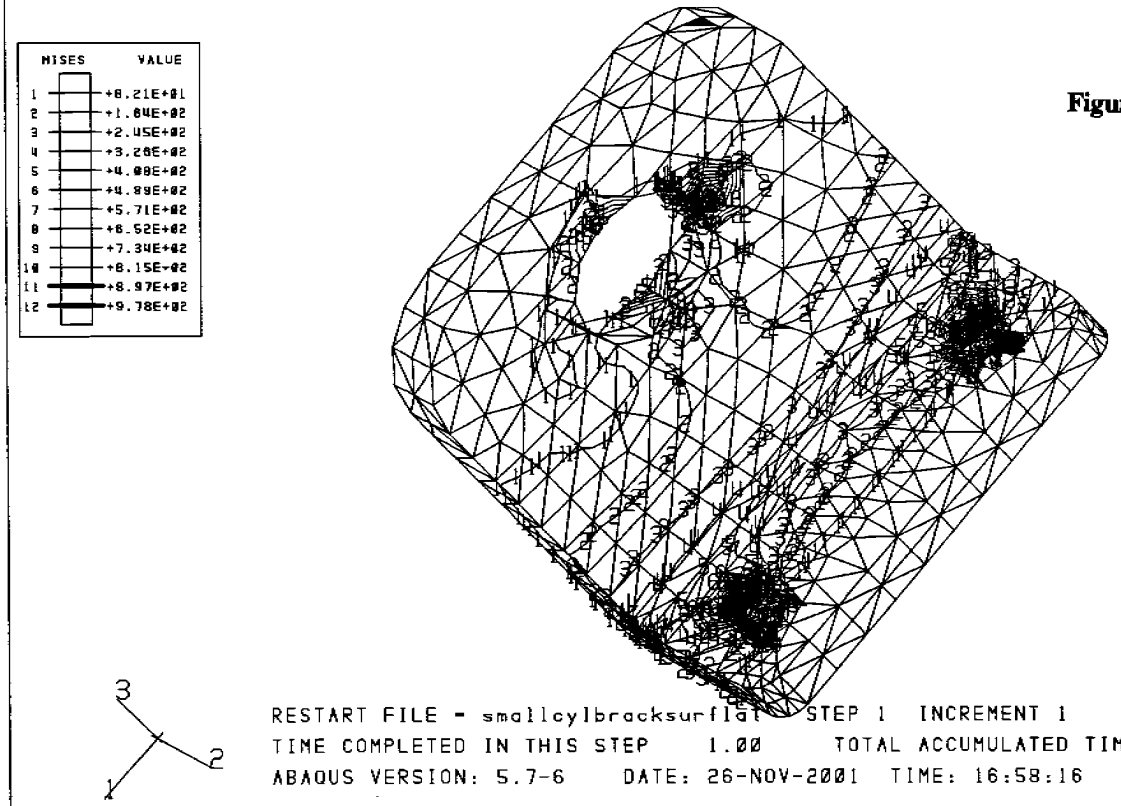


**Figure 4.4-2 Bracket C105585 at 10G Lateral Acceleration**

ABAQUS

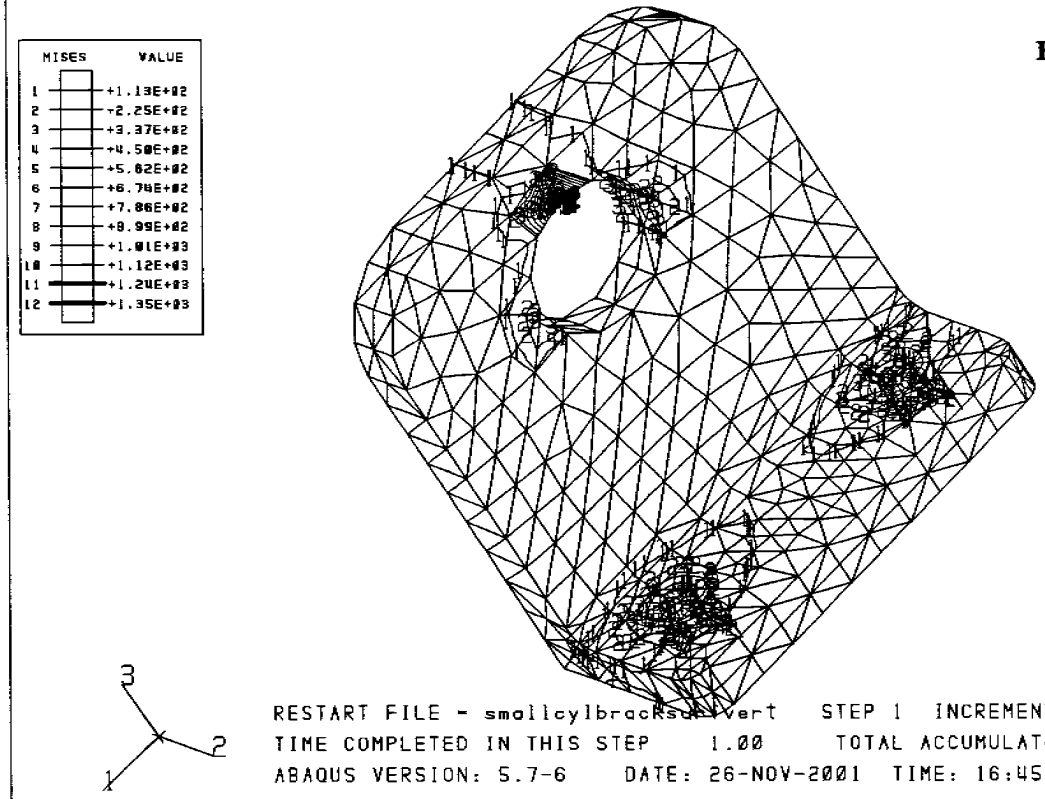


**Figure 4.4-3 Bracket C105585 at 10G Vertical Acceleration**

4.4.2 Fatigue Analysis

The natural frequencies of the bracket were first determined through the use of the unit load cases from section 4.4.1. The bracket natural frequencies are :

Axial = 154 hz

Lateral = 768 hz

Vertical = 1165 hz

The above natural frequencies are greater than the 60 hz requirement specified in ref. 1. Calculation is shown below:

Axial

Unit load = 38 lb axial

axial displacement = 0.00415 in.

Stiffness, K = 38/.00415 = 9156 lb/in.

Natural frequency, Fnx = $(1/2\pi)$ $(\sqrt{Kg/W})$ where g = 386.4

W = 1.9 lb tank + 1.9 lb gas = 3.8 lb

= $(1/2\pi)$ $(\sqrt{9156 \times 386.4/3.8})$ = 154 hz

At 3 minutes per axis:

Applied no. of cycles = 154 x 3 60 = 27720 cycles

Lateral

Unit load = 19 lb lateral

Lateral displacement = 0.000166 in.

Stiffness, K = 19/.000166 = 114458 lb/in.

Natural frequency, Fnx = $(1/2\pi)$ $(\sqrt{Kg/W})$ where g = 386.4 , W = 1.9 lb

= $(1/2\pi)$ $(\sqrt{114458 \times 386.4/1.9})$ = 768 hz

Applied no. of cycles = 768 x 3 x 60 = 138240 cycles

Vertical

Unit load = 19 lb vertical

Vertical displacement = 0.0000721 in.

Stiffness, K = 19/.0000721 = 263523 lb/in.

Natural frequency, Fnx = $(1/2\pi)$ $(\sqrt{Kg/W})$ where g = 386.4 , W = 1.9 lb

= $(1/2\pi)$ $(\sqrt{263523 \times 386.4/1.9})$ = 1165 hz

Applied no. of cycles = 1165 x 3 x 60 = 209700 cycles

From section 4.4.1 and SN curve Al 2219-T81 from ref. 9, at:

axial vibration alternating stress, $\sigma = \pm 12.3$ ksi, Ni = 300000 cycles

lateral vibration alternating stress, $\sigma = \pm 3$ ksi, Ni = infinite cycles

vertical vibration alternating stress, $\sigma = \pm 4$ ksi, Ni = infinite cycles

Fatigue damage, U = $\Sigma$ni/Ni

= 27720/300000 + 138240/infinity + 209700/infinity

= .0924 x factor of 4 = .37

Therefore margin of safety, M.S. = .8/.37 - 1 = 1.16

4.4.3 Fracture Mechanics

The NASA/FLAGRO Fatigue Crack Growth Program (Ref. 8) was used to validate the Bracket C105585 by showing harmful flaw growth will not occur during the launch random vibration. A corner crack case on the lug/base hole was used in analysis. The initial flaw sizes are determined by standard fluorescent penetrant inspection of the bracket. Result of the safe life analysis shows that the bracket design is structurally stable as shown in the summary below:

| Initial Flaw (a x c) | Size after 4th Life (a x c) | Ka @ 5th (Ksi√in) | M.S. (K1c x .85)/K1c -1 |
|---|---|---|---|
| .025x.125 | .025x.125 | 2.23 | 11.0 |
| .075x.075 | .0768x.075 | 3.38 | 7.0 |
| .125x.125 | .1311x.125 | 3.93 | 7.0 |

FATIGUE CRACK GROWTH ANALYSIS

DATE: 09/06/81 TIME: 03:49:31
(computed: NASA/FLAGRO Version 2.03, March 1995.)
U.S. customary units [inches, ksi, ksi sqrt(in)]

PROBLEM TITLE

MIT Bracket for Cylinder Tank

GEOMETRY

MODEL: CC03-Corner crack from hole in lug (2D)

Plate Thickness, t = 0.2400
" Width, W = 0.7500
Hole Diameter, D = 0.2650

FLAW SIZE:

a (init.) = 0.2500E-01
c (init.) = 0.1250
a/c (init.) = 0.2000

MATERIAL

MATL 1: 2219-T851
Plt & Sht; L-T; LA, DA

Material Properties:

| Matl: No. | UTS | YS | K1e | K1c | Ak | Bk | Thk | Kc | KIscc |
|---|---|---|---|---|---|---|---|---|---|
| 1 | 65.0 | 53.0 | 46.0 | 33.0 | 1.00 | 1.00 | 0.240 | 64.0 | |

| Matl: No. | Crack Growth Eqn Constants C | n | p | q | DKo | Rcl | Alpha | Smax/SIGo |
|---|---|---|---|---|---|---|---|---|
| 1 | 0.119E-07 | 3.156 | 0.50 | 1.00 | 3.00 | 0.70 | 1.50 | 0.30 |

MIT Bracket for Cylinder Tank
MODEL: CC03

FATIGUE SCHEDULE BLOCK INPUT TABLE

MIT Bracket for Cylinder Tank Load Spectrum

[Note: Stress = Input Value * Stress Factor]

Stress Scaling Factors for Block Case: 1

Scale Factor for Stress S3: 1.0000

Total No. of Blocks in Schedule = 1

Block Number and Case Correspondences

| Block Number From - To | Block Case No. |
|---|---|
| 1 - 1 | 1 |

SINGLE DISTINCT BLOCK

| STEP | MAT | NUMBER OF FATIGUE CYCLES | S3 (t1) | S3 (t2) | S (t1) | S (t2) |
|---|---|---|---|---|---|---|
| 1: | 1: | 27720.00 : | 7.00: | -7.00: | 0.00: | 0.00: |
| 2: | 1: | 138240.00 : | 2.70: | -2.70: | 0.00: | 0.00: |
| 3: | 1: | 209700.00 : | 0.20: | -0.20: | 0.00: | 0.00: |

Environmental Crack Growth Check for Sustained Stresses
(Kmax less than KIscc): NOT SET

MIT Bracket for Cylinder Tank
MODEL: CC03

FATIGUE SCHEDULE BLOCK STEP DESCRIPTIONS

MIT Bracket for Cylinder Tank Load Spectrum

| STEP | MAT | NUMBER OF FATIGUE CYCLES | Description of steps |
|---|---|---|---|
| 1: | 1: | 27720.00 | :Axial Vib. |
| 2: | 1: | 138240.00 | :Lateral Vib. |
| 3: | 1: | 209700.00 | :Vertical Vib. |

MIT Bracket for Cylinder Tank
MODEL: CC03

ANALYSIS RESULTS:
---

| Schdl | Block | Step | Final Flaw Size a | Final Flaw Size c | K max a-tip | K max c-tip |
|---|---|---|---|---|---|---|
| 1 | 1 | 1 | 0.025000 | 0.125000 | 2.232071 | 0.57168 |
| 1 | 1 | 2 | 0.025000 | 0.125000 | 0.860942 | 0.22050 |
| 1 | 1 | 3 | 0.025000 | 0.125000 | 0.063773 | 0.01633 |

FINAL RESULTS:
All Stress Intensities are below the Fatigue Threshold.
NO Growth in Schedule No. 1
Crack Size a = 0.250000E-01 , a/c = 0.200000

# FATIGUE CRACK GROWTH ANALYSIS

DATE: 09/06/81  TIME: 05:32:04
[computed: NASA/FLAGRO Version 2.03, March 1995.)
U.S. customary units [inches, ksi, ksi sqrt(in)]

## PROBLEM TITLE

MIT Bracket for Cylinder Tank

## GEOMETRY

MODEL: CC03-Corner crack from hole in lug (2D)

Plate Thickness, t = 0.2400
" Width, W = 0.7500
Hole Diameter, D = 0.2650

FLAW SIZE:

a (init.) = 0.7500E-01
c (init.) = 0.7500E-01
a/c (init.) = 1.000

## MATERIAL

MATL 1: 2219-T851
Plt & Sht; L-T; LA, DA

Material Properties:

| Matl: No. | UTS | YS | K1e | K1c | Ak | Bk | Thk | Kc | KIscc |
|---|---|---|---|---|---|---|---|---|---|
| 1 | 65.0 | 53.0 | 46.0 | 33.0 | 1.00 | 1.00 | 0.240 | 64.0 | |

| Matl: No. | Crack Growth Eqn Constants C | n | p | q | DKo | Rcl | Alpha | Smax/SIGo |
|---|---|---|---|---|---|---|---|---|
| 1 | 0.119E-07 | 3.156 | 0.50 | 1.00 | 3.00 | 0.70 | 1.50 | 0.30 |

MIT Bracket for Cylinder Tank
MODEL: CC03

FATIGUE SCHEDULE BLOCK STRESS TABLE

| STEP | MAT | NUMBER OF FATIGUE CYCLES | S3 (ksi) (t1) | S3 (ksi) (t2) | S (ksi) (t1) | S (ksi) (t2) |
|---|---|---|---|---|---|---|
| 1 | 1 | 27720.00 | 7.00 | -7.00 | 0.00 | 0.00 |
| 2 | 1 | 138240.00 | 2.70 | -2.70 | 0.00 | 0.00 |
| 3 | 1 | 209700.00 | 0.20 | -0.20 | 0.00 | 0.00 |

Environmental Crack Growth Check for Sustained Stresses
(Kmax less than KIscc): NOT SET

MIT Bracket for Cylinder Tank
MODEL: CC03

ANALYSIS RESULTS:
---

| Schdl | Block | Step | Final Flaw Size a | Final Flaw Size c | K max a-tip | K max c-tip |
|---|---|---|---|---|---|---|
| 1 | 1 | 1 | 0.075438 | 0.075000 | 3.365408 | 2.16449 |
| 1 | 1 | 2 | 0.075438 | 0.075000 | 1.297858 | 0.83401 |
| 1 | 1 | 3 | 0.075438 | 0.075000 | 0.096138 | 0.06177 |
| 2 | 1 | 1 | 0.075881 | 0.075000 | 3.367461 | 2.17232 |
| 2 | 1 | 2 | 0.075881 | 0.075000 | 1.298657 | 0.83705 |
| 2 | 1 | 3 | 0.075881 | 0.075000 | 0.096197 | 0.06200 |
| 3 | 1 | 1 | 0.076328 | 0.075000 | 3.369495 | 2.18019 |
| 3 | 1 | 2 | 0.076328 | 0.075000 | 1.299448 | 0.84009 |
| 3 | 1 | 3 | 0.076328 | 0.075000 | 0.096255 | 0.06223 |
| 4 | 1 | 1 | 0.076780 | 0.075000 | 3.371511 | 2.18811 |
| 4 | 1 | 2 | 0.076780 | 0.075000 | 1.300232 | 0.84316 |
| 4 | 1 | 3 | 0.076780 | 0.075000 | 0.096313 | 0.06245 |

FINAL RESULTS:
Critical Crack Size has NOT been reached.
at Cycle No. 209700.00 of Load Step No. 3
Step description: Vertical Vib.
of Block No. 1 of Schedule No. 4
Crack Sizes: a = 0.767802E-01 , c = 0.750000E-01 , a/c = 1.0237

MIT Bracket for Cylinder Tank
MODEL: CC03

ANALYSIS RESULTS:
---

| Schdl | Block | Step | Final Flaw Size a | Final Flaw Size c | K max a-tip | K max c-tip |
|---|---|---|---|---|---|---|
| 5 | 1 | 1 | 0.077237 | 0.075000 | 3.373506 | 2.19607 |
| 5 | 1 | 2 | 0.077237 | 0.075000 | 1.301007 | 0.84624 |
| 5 | 1 | 3 | 0.077237 | 0.075000 | 0.096371 | 0.06268 |
| 6 | 1 | 1 | 0.077697 | 0.075000 | 3.375480 | 2.20407 |
| 6 | 1 | 2 | 0.077697 | 0.075000 | 1.301774 | 0.84934 |
| 6 | 1 | 3 | 0.077697 | 0.075000 | 0.096428 | 0.06291 |
| 7 | 1 | 1 | 0.078163 | 0.075000 | 3.377432 | 2.21212 |
| 7 | 1 | 2 | 0.078163 | 0.075000 | 1.302533 | 0.85245 |
| 7 | 1 | 3 | 0.078163 | 0.075000 | 0.096484 | 0.06314 |
| 8 | 1 | 1 | 0.078632 | 0.075000 | 3.379361 | 2.22019 |
| 8 | 1 | 2 | 0.078632 | 0.075000 | 1.303282 | 0.85558 |
| 8 | 1 | 3 | 0.078632 | 0.075000 | 0.096539 | 0.06337 |

FINAL RESULTS:
Critical Crack Size has NOT been reached.
at Cycle No. 209700.00 of Load Step No. 3
Step description: Vertical Vib.
of Block No. 1 of Schedule No. 8
Crack Sizes: a = 0.786319E-01 , c = 0.750000E-01 , a/c = 1.0484

# FATIGUE CRACK GROWTH ANALYSIS

DATE: 09/06/81  TIME: 05:33:11
(computed: NASA/FLAGRO Version 2.03, March 1995.)
U.S. customary units [inches, ksi, ksi sqrt(in)]

## PROBLEM TITLE

MIT Bracket for Cylinder Tank

## GEOMETRY

MODEL: CC03-Corner crack from hole in lug (2D)

Plate Thickness, t = 0.2400
" Width, W = 0.7500
Hole Diameter, D = 0.2650

FLAW SIZE:

a (init.) = 0.1250
c (init.) = 0.1250
a/c (init.) = 1.000

## MATERIAL

MATL 1: 2219-T851
Plt & Sht; L-T; LA, DA

Material Properties:

| Matl: No. | UTS | YS | K1e | K1c | Ak | Bk | Thk | Kc | KIscc |
|---|---|---|---|---|---|---|---|---|---|
| 1 | 65.0 | 53.0 | 46.0 | 33.0 | 1.00 | 1.00 | 0.240 | 64.0 | |

| Matl: No. | Crack Growth Eqn Constants C | n | p | q | DKo | Rcl | Alpha | Smax/SIGo |
|---|---|---|---|---|---|---|---|---|
| 1 | 0.119E-07 | 3.156 | 0.50 | 1.00 | 3.00 | 0.70 | 1.50 | 0.30 |

MIT Bracket for Cylinder Tank
MODEL: CC03

FATIGUE SCHEDULE BLOCK STRESS TABLE

| STEP | MAT'L | NUMBER OF FATIGUE CYCLES | S3 (ksi) (t1) | S3 (ksi) (t2) | S (ksi) (t1) | S (ksi) (t2) |
|---|---|---|---|---|---|---|
| 1: | 1: | 27720.00 | 7.00: | -7.00: | 0.00: | 0.00: |
| 2: | 1: | 138240.00 | 2.70: | -2.70: | 0.00: | 0.00: |
| 3: | 1: | 209700.00 | 0.20: | -0.20: | 0.00: | 0.00: |

Environmental Crack Growth Check for Sustained Stresses
(Kmax less than KIscc): NOT SET

MIT Bracket for Cylinder Tank
MODEL: CC03

ANALYSIS RESULTS:
---

| Schdl | Block | Step | Final Flaw Size a | Final Flaw Size c | K max a-tip | K max c-tip |
|---|---|---|---|---|---|---|
| 1 | 1 | 1 | 0.126518 | 0.125000 | 3.905690 | 2.42072 |
| 1 | 1 | 2 | 0.126518 | 0.125000 | 1.506384 | 0.93343 |
| 1 | 1 | 3 | 0.126518 | 0.125000 | 0.111584 | 0.06914 |
| 2 | 1 | 1 | 0.128053 | 0.125000 | 3.913189 | 2.44198 |
| 2 | 1 | 2 | 0.128053 | 0.125000 | 1.509275 | 0.94162 |
| 2 | 1 | 3 | 0.128053 | 0.125000 | 0.111798 | 0.06975 |
| 3 | 1 | 1 | 0.129606 | 0.125000 | 3.920660 | 2.46339 |
| 3 | 1 | 2 | 0.129606 | 0.125000 | 1.512154 | 0.94987 |
| 3 | 1 | 3 | 0.129606 | 0.125000 | 0.112011 | 0.07036 |
| 4 | 1 | 1 | 0.131175 | 0.125000 | 3.928104 | 2.48496 |
| 4 | 1 | 2 | 0.131175 | 0.125000 | 1.515023 | 0.95818 |
| 4 | 1 | 3 | 0.131175 | 0.125000 | 0.112224 | 0.07097 |

FINAL RESULTS:
Critical Crack Size has NOT been reached.
at Cycle No. 209700.00 of Load Step No. 3
Step description: Vertical Vib.
of Block No. 1 of Schedule No. 4
Crack Sizes: a = 0.131175 , c = 0.125000 , a/c = 1.0494

MIT Bracket for Cylinder Tank
MODEL: CC03

ANALYSIS RESULTS:
---

| Schdl | Block | Step | Final Flaw Size a | Final Flaw Size c | K max a-tip | K max c-tip |
|---|---|---|---|---|---|---|
| 5 | 1 | 1 | 0.132762 | 0.125000 | 3.935521 | 2.50670 |
| 5 | 1 | 2 | 0.132762 | 0.125000 | 1.517880 | 0.96655 |
| 5 | 1 | 3 | 0.132762 | 0.125000 | 0.112436 | 0.07159 |
| 6 | 1 | 1 | 0.134366 | 0.125000 | 3.942911 | 2.52860 |
| 6 | 1 | 2 | 0.134366 | 0.125000 | 1.520728 | 0.97499 |
| 6 | 1 | 3 | 0.134366 | 0.125000 | 0.112647 | 0.07222 |
| 7 | 1 | 1 | 0.135988 | 0.125000 | 3.950277 | 2.55066 |
| 7 | 1 | 2 | 0.135988 | 0.125000 | 1.523565 | 0.98348 |
| 7 | 1 | 3 | 0.135988 | 0.125000 | 0.112857 | 0.07285 |
| 8 | 1 | 1 | 0.137626 | 0.125000 | 3.957618 | 2.57288 |
| 8 | 1 | 2 | 0.137626 | 0.125000 | 1.526393 | 0.99204 |
| 8 | 1 | 3 | 0.137626 | 0.125000 | 0.113066 | 0.07348 |

FINAL RESULTS:
Critical Crack Size has NOT been reached.
at Cycle No. 209700.00 of Load Step No. 3
Step description: Vertical Vib.
of Block No. 1 of Schedule No. 8
Crack Sizes: a = 0.137626 , c = 0.125000 , a/c = 1.1010

4.5 Torque for .25-28 Bolt

torque of $T_{max}$ = 140 in-lb.

$T_{min}$ = 120 in-lb.

Per NSTS 08307(reference 8) for Max & Min Preload calculation by Typical Coefficient Method:

Preload max, $PLD_{max} = (1+\tau)T_{max}/(KxD) + P_{ther}(pos)$

Preload min, $PLD_{min} = ((1+\tau)T_{min} - T_P)/(KxD) + P_{ther}(neg) - P_{loss}$

where $\tau$ = uncertainty factor in torque measurement = ± 25%

K = torque factor = .2

$P_{ther}$=thermal loss = 213 lb at 130°F & -436 lb at 0°F

$T_P$ = prevailing torque = 0, D = 0.250

$P_{loss}$ = 5% x $PLD_{max}$

$PLD_{max} = (1+.25)(140/(.2)(.25) + 213 = 3713$ lb.

$PLD_{min} = (1-.25)(120/(.2)(.25) - .05\ (3713) - 436$

$= 1178$ lb.

Spring rate of Inconel 718 thread:

$Kt = E_tA_t/L_t$ where $E_t = 29 \times 10^6$ psi

$A_t = .0364 in^2$ (tensile area)

$L_t$ = .25 in. bracket + .5 platform (assumed) = .75

$K_t = 29x10^6(.0364)/.75 = 1.41 \times 10^6$ lb/in

Spring rate of mounting face, $K_{f1}$ made of made of Aluminum bracket , & $K_{f2}$ Aluminum Platform

$E_{f1} = 10x10^6$ psi $\qquad E_{f2} = 10x10^6$ psi

$A_{f1} = (\pi/4)(.433^2-.265^2) = .0921 in^2$ $\qquad A_{f2} = (\pi/4)(.433^2-.265^2) = .0921 in^2$

$L_{f1}$ = .25 in. $\qquad L_{f2}$ = .5 in.

$K_{f1} = 10x10^6\ (0.0921)/.25 = 3.68 \times 10^6$ lb/in $\qquad K_{f1} = 10x10^6\ (0.0921)/.5 = 1.84 \times 10^6$ lb/in

$K_{eff.} = K_{f1} x\ K_{f2}/(K_{f1}+K_{f2}) = 3.68 \times 1.84 /(3.68 + 1.84) = 1.23 \times 10^6$ lb/in

Temperature effect on preload:

$P_{ther} = (\alpha_f - \alpha_t)\ (K_t)\ (K_f)\ (\Delta T)\ (L) / (K_t + K_f)$

where $\alpha_f$ = Aluminum thermal coefficient = $12.4 \times 10^{-6}$ in/in/°F at 150 °F

$\alpha_t$ = Inconel 718 thermal coefficient = $7.0 \times 10^{-6}$ in/in/°F at 150 °F

At high temperature of 150 °F, assuming bracket was assembled at 70 °F

$\Delta T$ = (150-70) = 80 at 150 °F

$P_{ther} = (12.4\text{-}7.0)10^{-6}\ (1.41x10^6)(1.23 \times 10^6)(80)(.75)/(1.41x10^6 + 1.23 \times 10^6)$ = 213 lb.

At low temperature of -100 °F, assuming bracket was assembled at 70 °F

$\Delta T$ = (-100-70) = -170 at 0 °F

where $\alpha_f$ = Aluminum thermal coefficient = $11.6 \times 10^{-6}$ in/in/°F at -100 °F

$\alpha_t$ = A286 thermal coefficient = $6.4 \times 10^{-6}$ in/in/°F at -100 °F

$P_{ther} = (11.6\text{-}6.4)10^{-6}\ (1.41x10^6)(1.23 \times 10^6)(-170)(.75)/(1.41x10^6 + 1.23 \times 10^6)$

= -436 lb.

External load to the tank:

Axial, $F_x$ = 103 lb at 27g

= 103 x 1.5 = 155 lb ultimate

$F_x$ x L1 = 2P x L2

where L1 = 1.75 L2 = .375

155 x 1.75 = 2P x .375

P = 362 lb/bolt in tensile

$P_{shear}$ = 155/2 = 78 lb/bolt in shear

Lateral, $F_y = 103/2 =$ 52 lb/bracket

$F_y \times L1 = 2P \times L2$

where L1 = 1.75 L2 = 1.50

$52 \times 1.75 = P \times 1.500$

P = 61 lb/bolt in tensile

$P_{shear} = 52/2 = 26$ lb/bolt in shear

Vertical, $F_z = 103/2 =$ 52 lb/bracket

P = 52/2 =26 lb/bolt in tensile

$P_{shear} = 0$ lb/bolt in shear

The axial direction is the worst case from the above with:

P = 362 lb/bolt in tensile ult., 362 x 1.1/1.5 = 265 lb tensile limit

$P_{shear}$ = 78 lb/bolt in shear ult., 78 x 1.1/1.5 = 58 lb. shear limit

Load allowables due to tension load, $P_{at}$: $A_t = .0364$

$F_{ty}$= 145 x .99 = 143 ksi

$F_{tu}$ = 180 x .99 = 178 ksi

$F_{su}$ = 124 x .99 = 122 ksi

$F_{bry}$ = 208 x .99 = 205 ksi

Yld load, $PA_{ty}=A_t xF_{ty}$ = 5205 lb.

Ult. Load, $PA_{tu}=A_t xF_{tu}$ = 6479 lb.

Ult. Shear Load, $PA_{ty}=A_t xF_{su}$ = 4440 lb.

Yld. Bearing Load, $PA_{tu}=A_t xF_{bry}$ = 7462 lb.

a1) Tensile load

Axial thread load, $Pt=PLD_{max} + n\phi(SFxP_j)$

where n = loading plane factor = 1.0

$\phi$ = stiffness load factor = $K_t/(K_t+K_f)$

= 1.41/(1.41+1.23) = .53

Therefore Pt axial load and margin of safety at:

Limit load, $P_t$ = 3713 + (1.0)(.53)(265)

= 3854 lb

Ultimate load, $P_t$ = 3713 + (1.0)(.53)(362)

= 3905 lb

$M.S._y$ = 5205/3854 - 1 = + .35

$M.S._u$ = 6479/3905 - 1 = +.66

a2) Twisting torque shear, $\tau = T_{max}$ (r/J)

where r = .25/2 = .125

$J = (\pi/32)(.250^4) = .000383\ in^4$

$\tau$ = 140 x .125/.000383 = 45.7si

At $F_{sy}$ = 122 ksi x .67 = 82 ksi shear yield

$M.S._{sy}$ = 82/45.7 = +.79

Combined stress during application of torque:

During installation of the tank, a torque applied of 140 in-lb max was analyzed to verify that there is no detrimental yielding of the .25 screw thread. The relationship below must be hold true for the maximum preload per NSTS 08307:

$(R_a+R_b)^2 + R_s^3 \leq 1$

where $R_a$ = the max. ratio of axial load to axial allowable

= $(SF \times P)/PA_{ty}$; $Pt/PA_{ty}$; $PLD_{max}/PA_{ty}$

= $(SF \times P)/PA_{ty} = 362/5205 = .07$

= $Pt/PA_{ty} = 3854/5205 = .74$

= $PLD_{max}/PA_{ty} = 3713/5205 = .71$

Therefore use $R_a = .74$

$R_b$ = ratio of bending load to bending load allowable.

Bending stress, $\sigma_b$=Mc/I at 14 lb for 140 in.- lb.

$M = 14 \times .25" = 3.5$ in-lb

$\sigma_b = 3.5 \times .125/(.000383/2) = 2.3$ ksi

$R_b = 2.3/143 = .02$

$R_s$ = ratio of shear load to shear load allowable

$= 45.7/82 = .560$

$(R_a+R_b)^2 + R_S^3 < 1 = (.74 + .02)^2 + .560^3 = .75 < 1$

$M.S._s = 1/.75 - 1 = 0.33$

Therefore combined stress due to the initial torque is not critical.

a3) Shear Pullout stress of thread:

from NSTS 08307:

For 0.25-28 UNF internal thread for Aluminum bracket

Ext. shear area, $A_{si} = \pi L_e D_e^{min} (.875-.57735 n_o(TD_e+TE_i+G_e))$

where Le = length of thread engagement = .375 min.

$D_e^{min}$ = major dia. of ext. thread = .2435

$TD_e$ = tol. on major dia. of ext. thread = .0065

$TE_i$ = tol. on pitch dia. of int. thread = .0032

$G_e$ = wear allowable = say .001

$n_o$ = thread per inch = 28

$A_{se} = \pi(.3750)(.2435)(.8750-.57735(28)(.0065+.0032+.001))$

$= 0.201$ in²

Axial load allowable for thread shear, $P_{se}$:

$PA_s = A_{si} \times F_s$ where $F_{sy} = 38 \times .96 \times .67 = 24$ ksi shear yield

$F_{su} = 38 \times .92 = 35$ ksi shear ultimate

$PA_{sy} = .201 \times 24000 = 4824$ lb shear yield allowable

$PA_{su} = .201 \times 35000 = 7035$ lb shear ult. allowable

$M.S._{sy} = 4824/3854 - 1 = +0.25$

$M.S._{su} = 7035/3905 - 1 = +0.80$

a4) Joint Separation load, $P_{sep}$:

$P_{sep} = P \times SF_{sep}$

Axial bolt load, $P_t = Pld_{min} + n\phi P_{sep}$

where $PLD_{min} = 1178$ lb

$n = 1.0$

$\phi = .53$

$P_{sep} = 362$ lb total axial reaction load (ultimate)

$P_t = 1178 + (1.0)(.53)(362)$

$= 1370$ lb $< PA_{ty} < 5205$ lb

for case #1 from NSTS 08307 where $P_{tu} < PA_{ty}$:

$M.S._{sep} = (PLD_{min}/(1-n\phi)P_{sep}) - 1$

$= (1178/(1-(1)(.53)(362)) - 1$

$= 5.9$

a5) Friction Reaction from In-line Axial load

At Pmax = 78 lb /bolt

Friction Force =.2 x 1178 = 135 lb > 78 lb

M.S. = 135/78 - 1 = 0.73

4.5 Weight & Volume Analysis :

Weight :

From ACAD, Cylinder 1.08 lb

Bosses @ .38 x 2 = .76

Tank .....1.84 say .....1.90 lb max.

Bracket at .180 x 2 = .36 say .40 lb max.

Jam nut, screws, washers .10

Tank/Bracket Assembly Total ..... 2.40 lb max

Volume :

From ACAD, Volume = 62.4 cu. in. > 61.03 cu. in. (1 liter)

## 5.0 References

1) ARDE's PN C4810, N/C, Assembly, Tank

2) ARDE's PM 10070, Statement of Work for TRD Gas Supply System

3) MIL-STD-1522A (USAF), Standard General Requirement for Safe Design and Operation of Pressurized Missile and Space Systems, Department of Defense, May 1984

4) MIL-HDBK-5F, Metallic Materials and Elements for Aerospace Vehicle Structures.

5) Hibbitt, Karlson, & Sorensen, Inc., ABAQUS Computer Code,

6) Roark's Formulas for Stress & Strain, Warren C. Young, 6th Edition.

7) Aerospace Structural Metals Handbook, Volume 2, 1996 Edition.

8) National Space Transportation System, NSTS 08307, Criteria for Preloaded Bolts, 10/13/1989

9) Aerospace Structural Metals Handbook, Volume 3, 1996 Edition.

10) SSP 30559, Structural Design and Verification Requirements, International Space Station Alpha.

11) SSP 30558, Fracture Control Requirements for Space Station.