Cryomagnet Dump Diodes and Conductor Requirements

Critical Design Review

May 2003

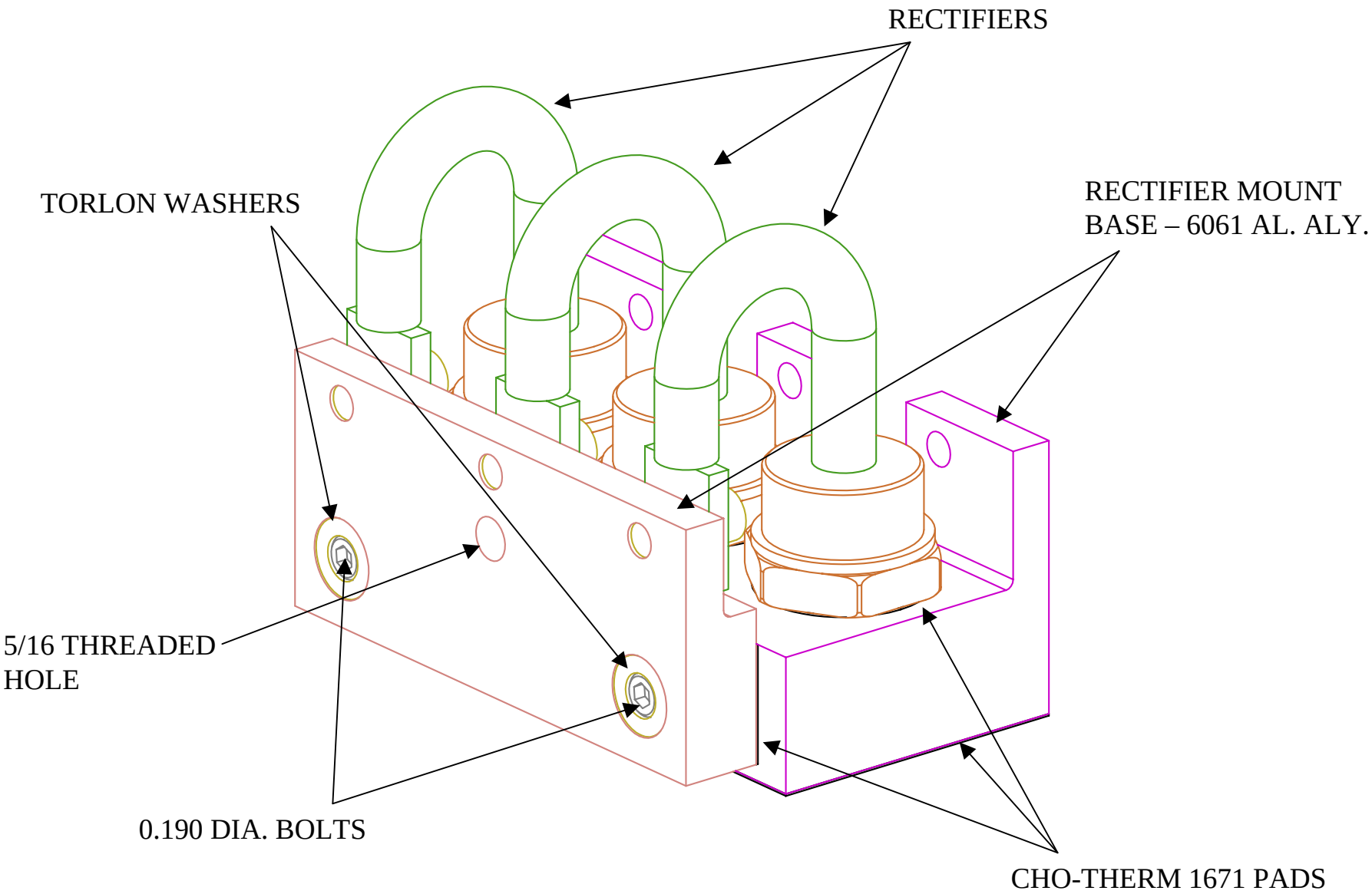

Cryomagnet Discharge System Interface

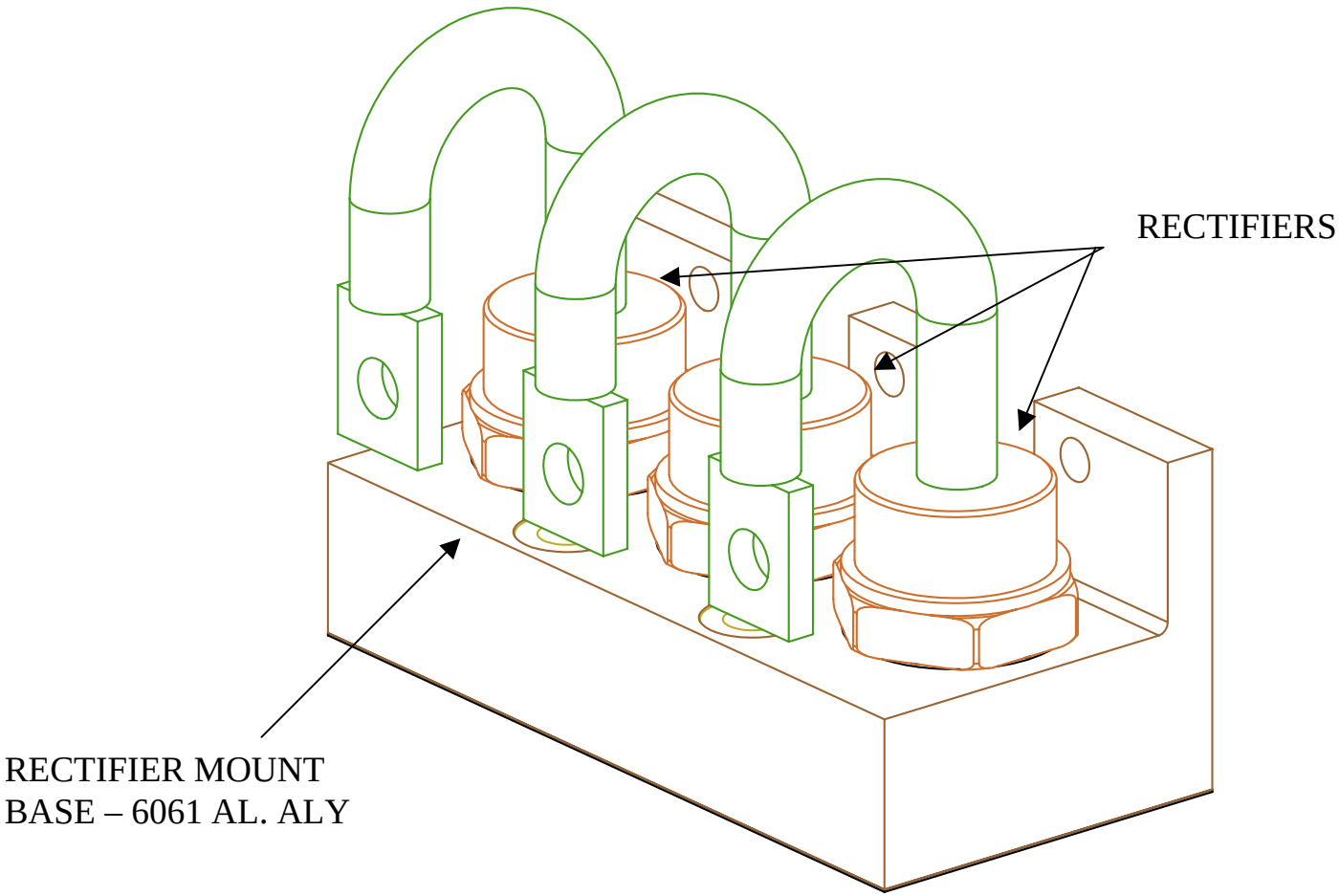

Cryomagnet Discharge System Interface

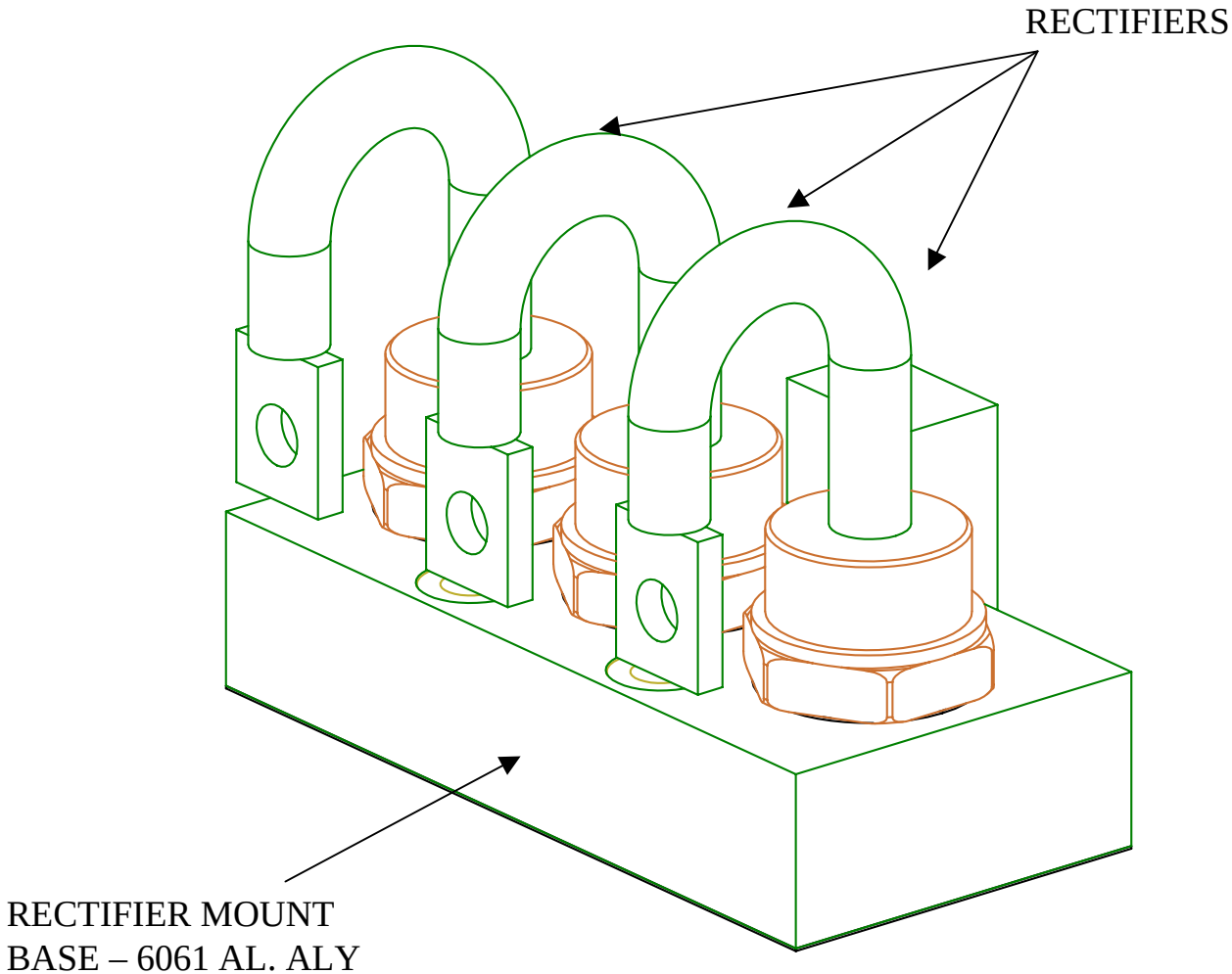

Cryomagnet Discharge System Interface

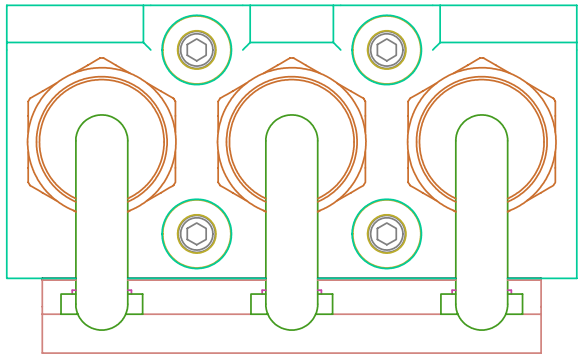

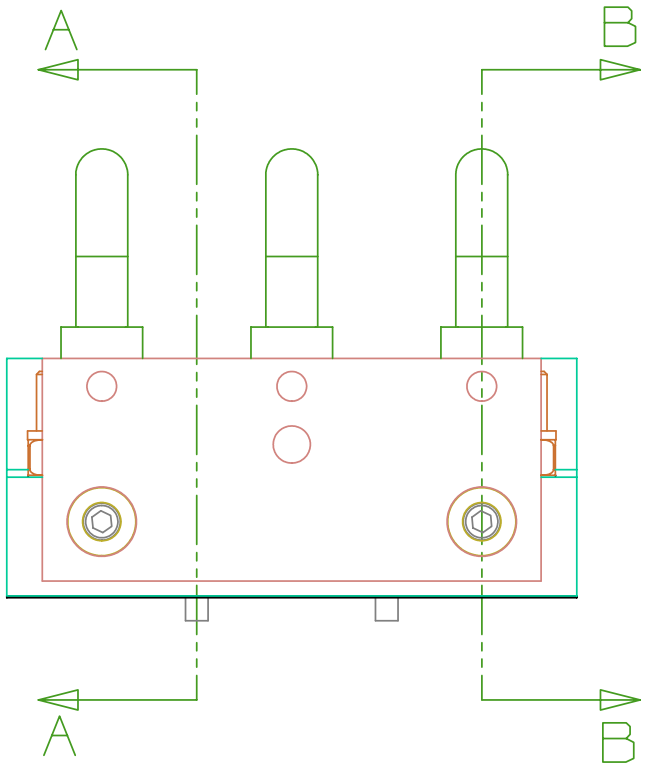

Cryomagnet Discharge System Interface

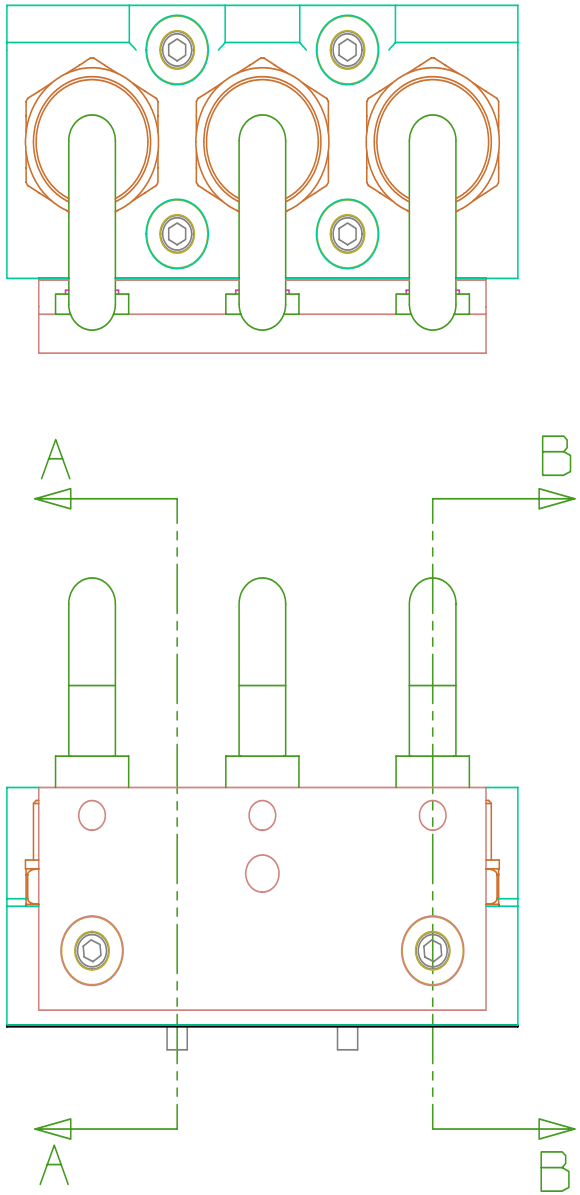

Cryomagnet Discharge System Interface

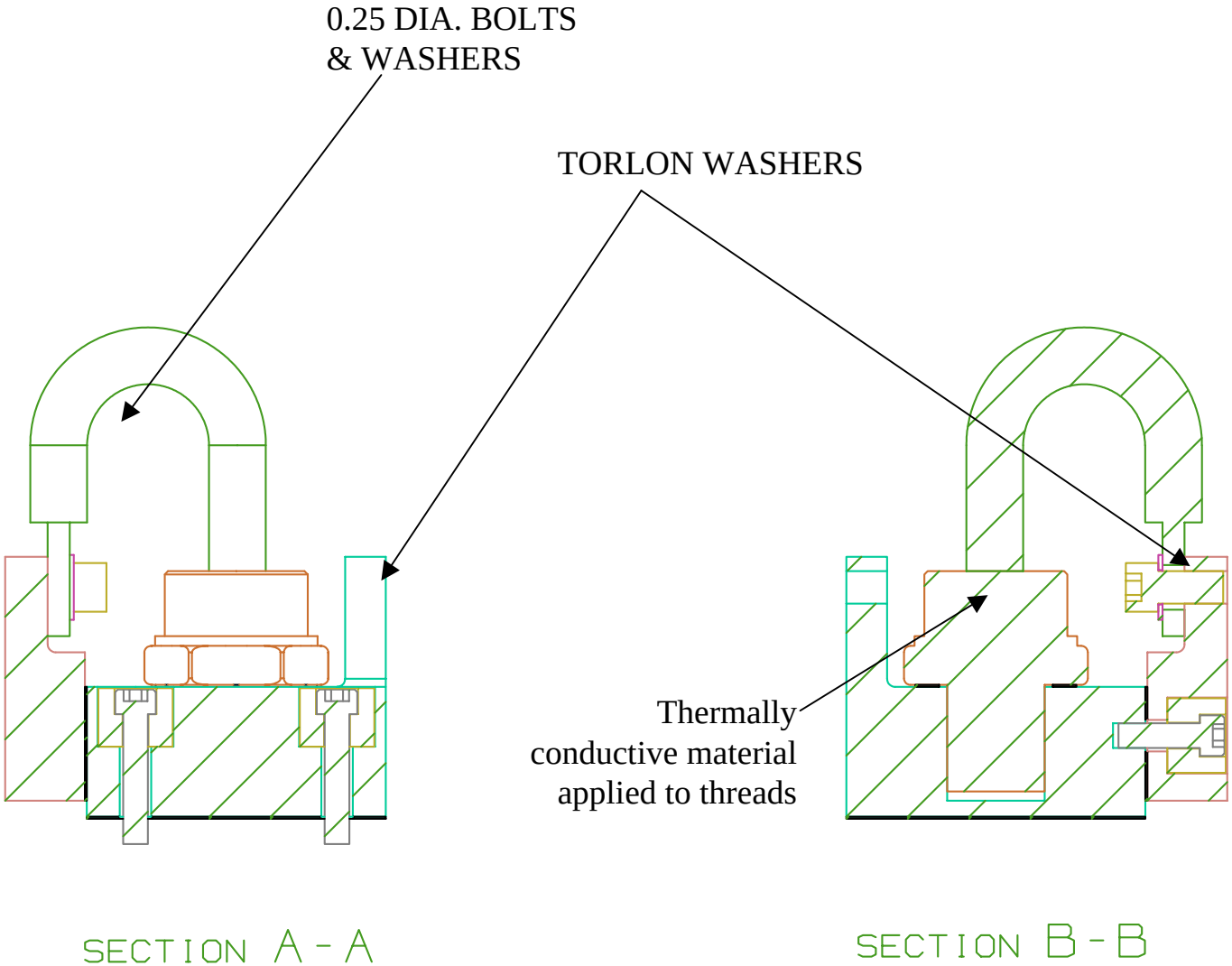

Cryomagnet Discharge System Interface

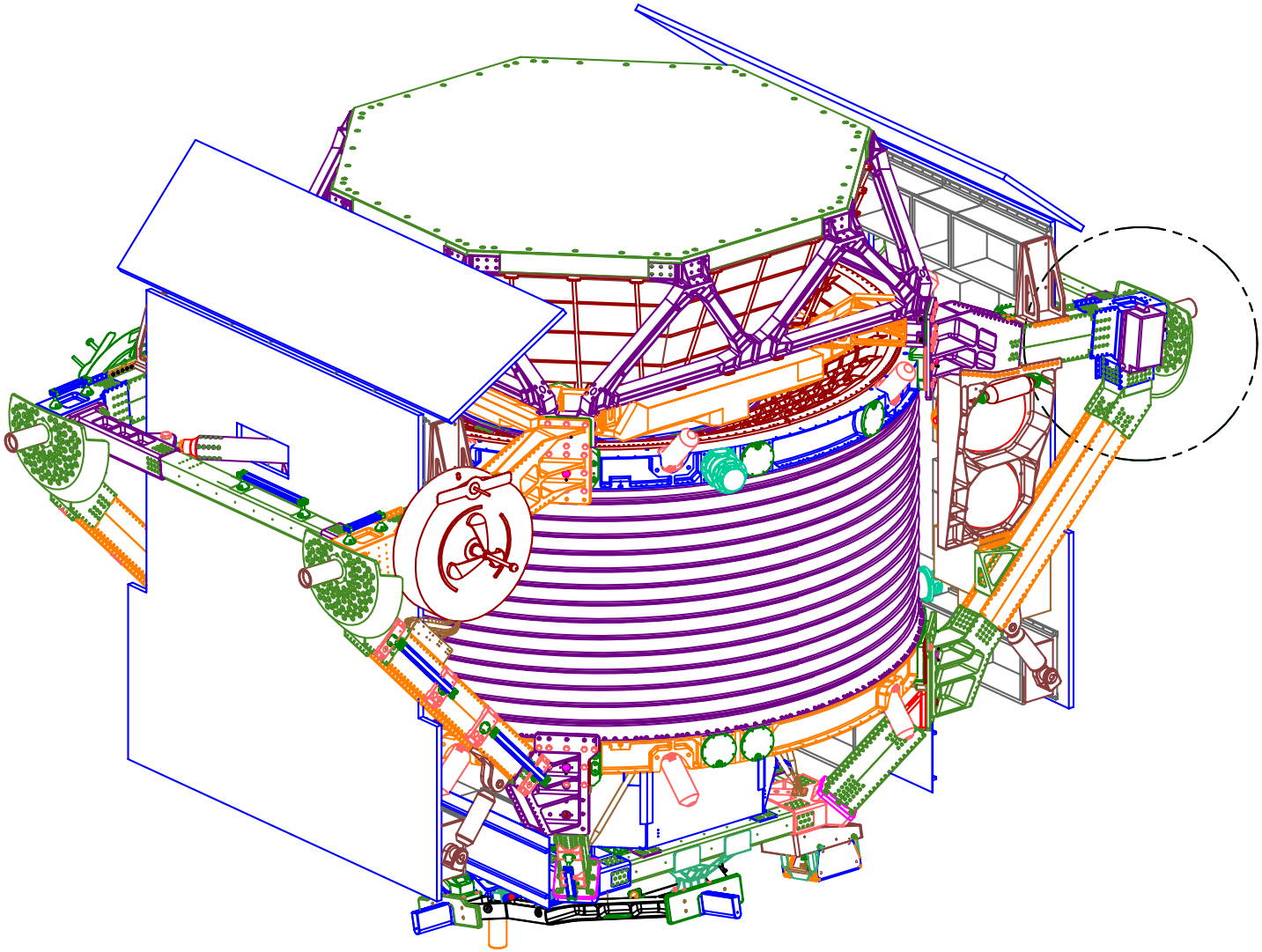

Cryomagnet Discharge System Interface

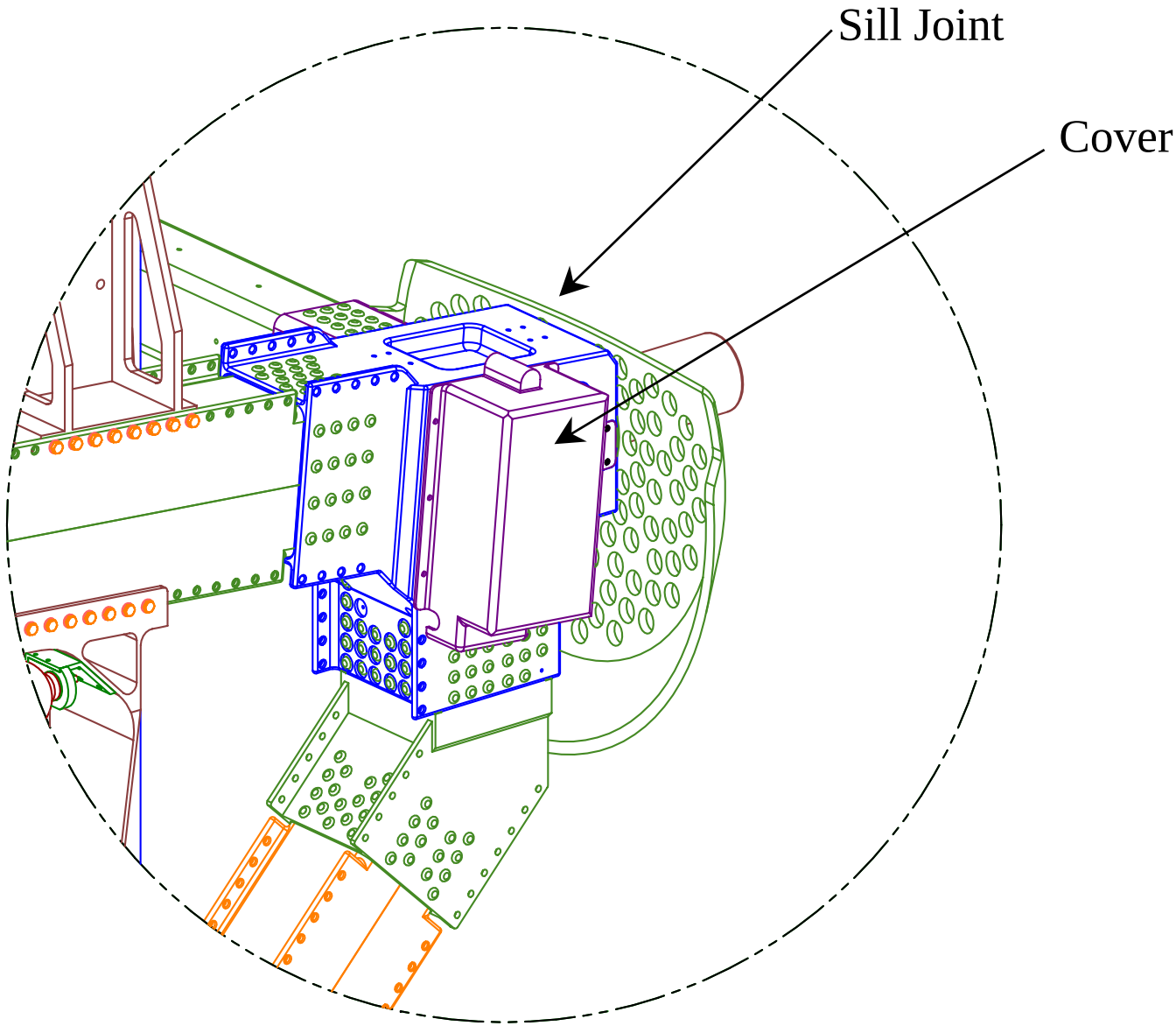

Cryomagnet Discharge System Interface

Conductor Requirements

- **Charge Conductor Length: 64 inches**
- **Discharge Conductor Length: 24.6 FT.**
- **Stranded Insulated Cable**
  - **Easier to fabricate and route**
  - **Minimal problems with Thermal/Mechanical Stress**
  - **2/0 Sufficient for Discharge Cable**
  - **Two 2/0 cables for Charge Cable**
    - **Lower Resistance**
    - **Lower Heat Load**