ICD redlines (Attachment 2)

3.4 CREW COMPARTMENT

3.4.1 Aft Flight Deck

A general arrangement of the aft flight deck is shown in Figure 3.4.1-1.

3.4.1.1 Payload Station

3.4.1.1.1 Payload Station Distribution Panel (PSDP)

The Orbiter shall provide electrical interfaces at the PSDP in accordance with Figure 3.4.1.1.1-1.

3.4.1.1.2 Standard Payload Display and Control Interface Modules

The STS shall provide a Standard Switch Panel (SSP), a Payload Data Interface Panel (PDIP) and two Computer Interface Panels (CIPs). Performance charateristics shall be as defined in Section 13.

3.4.1.1.2.1 Standard Switch Panel (SSP)

NOT APPLICABLE

The Standard Switch Panel primary location will be in payload dedicated console location L12, with optional locations in L10 or L11 when defined in cargo unique ICDs. Layout of the SSP front panel, including lettering shall be as shown in Figure 3.4.1.1.2.1-1. The SSP rear panel connector designations and layout shall be as shown in Figure 3.4.1.1.2.1-2.

E3.4.1.1.2.2 Payload Data Interface Panel (PDIP)

EXCEPTION

This paragraph is applicable in its entirety with the additional configuration information:
AMS-02 will interface with PDIP#1 (located in panel L12) to provide interfaces for routing one complete RS-422 channel (transmit and receive) to either the T-0 (pre-launch) or to their DDRS (on-orbit). The second RS-422 channel will transmit AMS-02 data on-orbit to the PDIP #1 internal relays which will be configured to route the data to either Ku channel 2 or 3.
AMS-02 will interface with PDIP#2 (located in panel L11) to route their 1553B commands/data to either the T-0 (pre-launch) or to the OIUs (on-orbit). The PDIP shall be so configured such that the routing of the data to the T-0 will occur with no power to the orbiter.

The Payload Data Interface Panel primary location will be in payload dedicated console location L12, with optional locations in L10 or L11 when defined in cargo unique ICDs. Layout of the PDIP front panel, including lettering, shall be as shown in Figure 3.4.1.1.2.2-1. The PDIP rear panel connector designations and layout shall be as shown in Figure 3.4.1.1.2.2-2. Interface definition shall be as defined in Paragraph 13.3.1.1.

3.4.1.1.2.3 Computer Interface Panel (CIP)

The Computer Interface Panel primary locations will be in payload station dedicated console location L11 and mission station dedicated console location R12. Layout of the CIP front panel, including lettering, shall be as shown in Figure 3.4.1.1.2.3-1. The CIP rear panel connector designations and layout shall be as shown in Figure 3.4.1.1.2.3-2.

NOT APPLICABLE

7.0 ELECTRICAL POWER INTERFACES

7.0.1 Cargo Element Definition

7.0.1.1 Orbiter/Cargo Element Electrical Power Interface

This paragraph is not applicable. See paragraph 7.0.2.1 for Payload Power Requirements.

7.0.1.2 Fusing Diagram

Orbiter/Cargo Element electrical power prelaunch fusing diagram shall be as shown in Figure 7.0.1.2-1 using the T-0 interface. Orbiter/Cargo Element electrical power on-orbit fusing diagram shall be as shown in Figure 7.0.1.2-2 using the Assembly Power Converter Units (APCUs) or Station-Shuttle Power Transfer System (SSPTS)-Power Transfer Unit (PTUs).

7.0.2 UNIQUE MISSION SPECIFIC REQUIREMENTS

7.0.2.1 Payload Power Requirements

Cargo Element power interface characteristics at Orbiter/Cargo Element interface shall be as shown in Table 7.0.2.1-1.

~~7.0.2.2 Rollback Power~~ DELETE ~~NOT APPLICABLE~~

~~AMS-02 will require power during a rollback to run the onboard vent pump. For further information see the MIP Annex 8 and the OMRSD.~~

7.0.4 ORBITER-TO-PAYLOAD DEDICATED ACCOMMODATIONS

NOT APPLICABLE

TABLE 7.0.2.1-1 CARGO ELEMENT POWER CHARACTERISTICS AT STS/CARGO ELEMENT INTERFACE

ORBITER SERVICE BY FLIGHT PHASE	REF PARA	VOLTAGE RANGE (REF TABLE)	IDD ALLOCATION	POWER (KW or KVA) MAX CONT	POWER (KW or KVA) PEAK	TIME LIMIT ON PEAK POWER	NOTES
PRELAUNCH							
T-0 GSE PWR (PL PROVIDED)	7.4.1	N/A	Y	2.0 KW	2.0 KW	N/A	3
				~~.632 KVA~~	~~.632 KVA~~	~~N/A~~	~~1~~
				~~.012 KW~~	~~.012 KW~~	~~N/A~~	~~1~~
~~APCU/PTU POWER~~	~~7.3.2~~	~~7.3.2.1.1~~ ~~7.3.2.2.1~~	~~Y~~	~~2.22 KW~~	~~2.22 KW~~	~~N/A~~	~~3~~
~~CABIN P/L BUS (AFD)~~	~~7.3.3.1~~	~~7.3.3.1~~	~~Y~~	~~.028 KW~~	~~.028 KW~~	~~N/A~~	~~2~~
ASCENT							
~~CABIN P/L BUS (AFD)~~	~~7.3.3.1~~	~~7.3.3.1~~	~~Y~~	~~.028 KW~~	~~.028 KW~~	~~N/A~~	~~2~~
ON-ORBIT 1							
APCU/PTU POWER	7.3.2	7.3.2.1.1 7.3.2.2.1	Y	2.0 KW	2.5 KW	N/A	
ON-ORBIT 2							
APCU/PTU POWER	7.3.2	7.3.2.1.1 7.3.2.2.1	Y	2.0 KW	2.5 KW	N/A	

NOTES: RESERVED

(1): ~~A total of 0.632 KVA~~ provided via 110 VAC GSE (0.6 KVA is for the vacuum pump and the 0.032 KVA is for ~~valve DV9B which~~ isolates the pump from SFHe tank). Power removed ~~at L-30~~ minutes. .012 KW provided ~~via 48 VDC~~ GSE for the DV9C valve ~~used~~ to evacuate the pilot valve vacuum vessel. Power removed ~~at L-30~~ minutes. RESERVED

(2): ~~.028 KW power~~ provided via redundant cabin payload buses to separate SSP switches to BaroSwitch ~~Electronics (BSE)~~. ~~Either bus/switch~~ shall be capable of providing entire load. ~~Negligible~~ amount ~~of power from~~ cabin buses also used to ~~drive SSP~~ indicators. Minimum interface voltage at ROEU I/F for BSE ~~is~~ 18 VDC.

(3): 2.0 KW provided via 124 VDC GSE from payload installation until ~~T-6~~ L-48 Hours hours. ~~2.22 KW provided via APCU/PTU from T-6 hours until the T-9 hold termination time.~~

Need to sit with AMS customer and see how the 120VDC numbers change for all phases including any increases due to N-1 tracker (Thermal pitch talked about a heater)

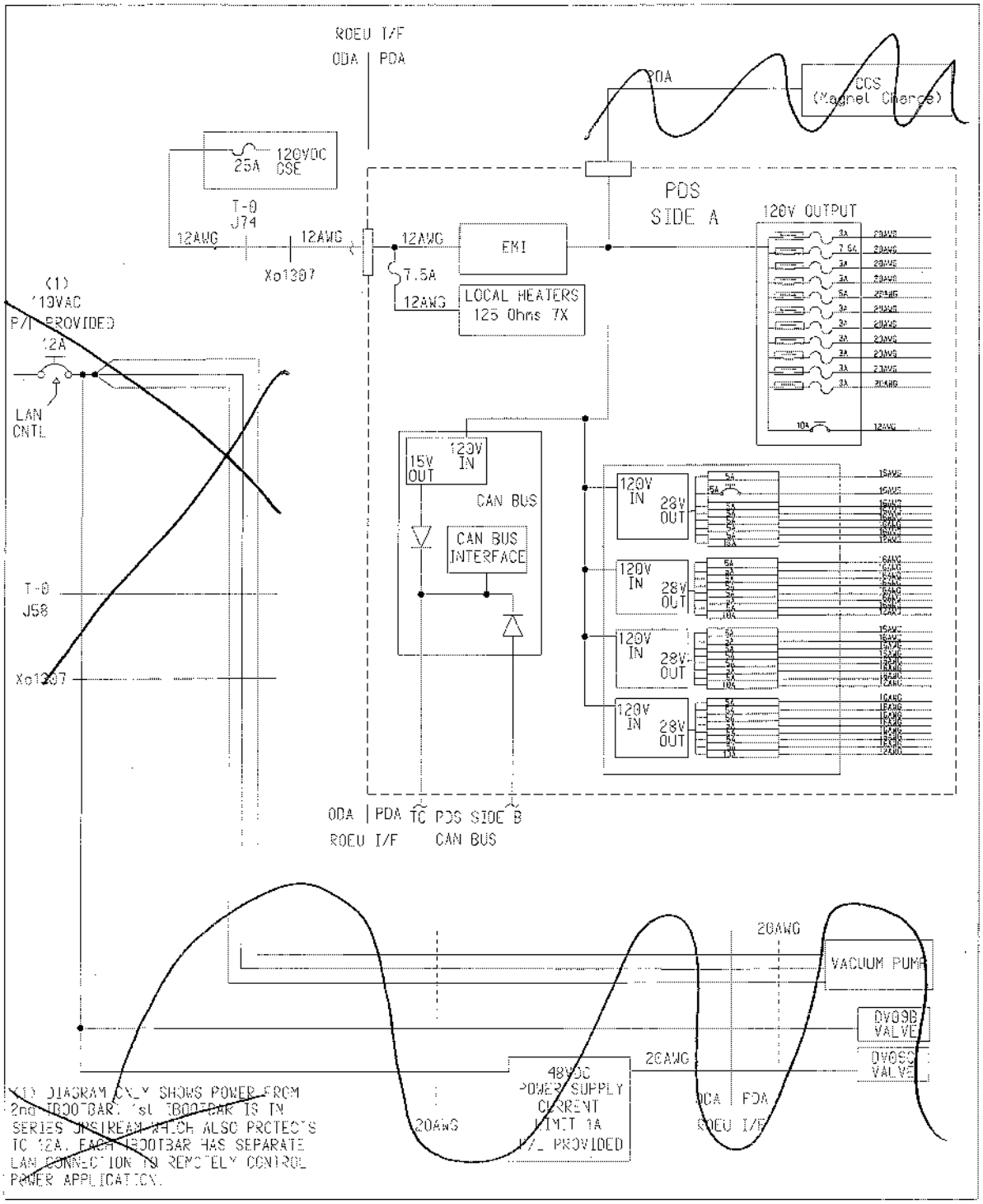

FIGURE 7.0.1.2-1 FUSING DIAGRAM - PRELAUNCH (T-0)

7.3 DC POWER

7.3.1 Orbiter DC Electrical Power System and Distribution

E7.3.1.1 Cargo Bay Main DC Power

EXCEPTION
This paragraph and associated figures are applicable in its entirety with the additional configuration information:
AMS-02 will be connected to the output of APCU1/PTU1 with the OBSS connected to the output of APCU2/PTU2. In order to provide the power required for AMS-02, the APCUs/PTUS must be interconnected.
Additionally, AMS-02 will not have an interface to the primary bus.

Orbiter main DC power distribution in the cargo bay is as shown in Figures 7.3.1.1-1 or 7.3.1.1-2.

7.3.1.2 Cargo Bay Aft DC Power

NOT APPLICABLE

7.3.1.3 Aft Flight Deck (AFD) DC Power and Cargo Bay Auxiliary Power

Orbiter AFD DC power and Cargo Bay auxiliary power shall be distributed as shown in Figure 7.3.1.3-1. NOT APPLICABLE

7.3.1.4 Circuit Protection Criteria

Payload electrical distribution circuitry shall be designed such that electrical faults do not damage Orbiter wiring nor present a hazard to the Orbiter or crew. Circuit protection devices shall be incorporated into the payload design in compliance with the NASA electrical design criteria for cargo element circuit protection as defined in NSTS 18798.

Orbiter electrical wiring insulation is rated at 200 degrees Celsius.

7.3.1.5 SSP Circuit Protection

When powered by the cargo element, Standard Switch Panel wiring shall be protected with a circuit protection device equivalent to a 5 amp fuse or smaller, located on the cargo element side of the interface.

NOT APPLICABLE

7.3.3 Low Voltage Electrical Power

7.3.3.1 Cabin Payload Bus

DC electrical power provided by the Orbiter to the Cabin Payload Bus (AFD) for use by all payloads manifested by mission phase, shall be as specified in Table 7.3.3.1-1.

NOT APPLICABLE

7.3.3.2 Aft PL B or AFT PL C

NOT APPLICABLE

7.3.3.3 Cargo Bay Primary PL Bus

7.3.3.3.1 SMCH Interface

NOT APPLICABLE

7.3.3.4 Aux PL A and Aux PL B

NOT APPLICABLE

7.3.4 Low Voltage Power Characteristics

NOT APPLICABLE

7.3.4.1 DC Power Ripple and Transient Limits

Ripple and transient limits for electrical power provided by the Orbiter at the indicated interfaces shall not exceed the voltage values specified in the following paragraphs.

During normal equipment operation, both ground power and fuel cell power, voltage transients of opposite polarity shall not occur simultaneously on the positive and return dc power busses.

7.3.4.1.1 Inflight DC Power BUS Ripple

Inflight DC power bus ripple at the interface shall not exceed 0.9 volts peak-to-peak narrowband (30 Hz to 7 kHz) falling 10 dB per decade to 0.28 volts peak-to-peak at 70 kHz, thereafter remaining constant to 400 mHz.

The momentary coincidence of 2 or more signals at any one frequency shall not exceed the envelope defined as 1.6 volts peak-to-peak (30 Hz to 7 kHz), falling 10 dB per decade to 0.5 volts peak-to-peak at 70 kHz, thereafter remaining constant to 400 mHz.

Under the conditions of a passive payload (resistive simulation of load), the ripple on the power supplied shall not be greater than 0.8 volts peak-to-peak broadband (DC to 50 mHz); no discrete frequency shall exceed 0.4 volts peak-to-peak. This condition shall apply at the mid-body power interface only.

7.3.4.2 Inflight DC Power Transients

Inflight DC power transients on the Orbiter DC power busses at the cargo element interface measured differential mode (line-to-line) shall not exceed twice the line voltage relative to the line voltage for either positive or negative transients. A typical positive transient is shown in Figure 7.3.4.2-1.

7.3.4.2.1 Hydraulic Circulation Pump and Aft PL Busses

NOT APPLICABLE

7.3.4.2.2 Hydraulic Circulation Pump & PRI & Cabin & AUX PL Busses

Hydraulic circulation pump produced transient voltages on the PRI, Cabin and AUX PL Busses at the payload design interfaces, shall not exceed the voltage envelope of Figure 7.3.4.2.2-1. Payload design shall accommodate sawtooth transient oscillations having a maximum amplitude of 4 volts peak-to-peak on the PRI, Cabin and AUX PL busses at the cargo element interface. The oscillation has a base frequency between 500 and 700 Hz and contained in the inner envelope shown in Figure 7.3.4.2.2-1. These bus voltage transients (caused by activation of the hydraulic circulation pump connected to that bus) may occur at any time during on-orbit operations, plus activation at touchdown, and shall not be subjected to pre-flight scheduling.

7.3.4.3 Ground DC Power (via Orbiter EPDS)

The narrowband ripple voltage at the interface shall not exceed an envelope with limits 1.2 volts peak-to-peak (30 Hz to 7 kHz) falling log-linear to 0.28 volts peak-to-peak at 70 kHz, thereafter remaining constant to 400 MHz.

The momentary coincidence of two or more signals at any one frequency shall not exceed an envelope with limits 2.0 volts peak-to-peak (30 Hz to 7 kHz), falling log-linear to 0.5 volts peak-to-peak at 70 kHz, thereafter remaining constant to 400 MHz.

Ground power transients on the Orbiter DC power busses at the cargo element interface measured differential mode (line-to-line) shall not exceed twice the line voltage relative to the line voltage for either positive or negative transients. A typical positive transient is shown in Figure 7.3.4.2-1.

7.3.4.3.1 Hydraulic Circulation Pump and Ground Power

When the Orbiter is on ground power, hydraulic circulation pump start-up will produce voltage transients on the DC bus connected to the pump and all sub-buses for that bus. The oscillations have a base frequency between 500 and 700 Hz with a duration of approximately 250 to 300 milliseconds. Only one pump motor shall be turned on at a time.

Hydraulic pump operations are required at the commencement of cryoloading.

7.3.4.4 Common-Mode Voltage

Common-mode voltage, as used herein, is defined as the voltage drop across two points of Orbiter structure caused by a current through the impedance between those two points. The common-mode voltage for the longest Cargo Bay dimension (Station Xo585 to Xo1307 bulkhead) shall not exceed 0.3 volts peak-to-peak when measured in the time domain with an instrument bandwidth of at least 50 MHz (linear function). This is inclusive of the DC component which may exist in the vehicle structural members. Voltages measured at discrete frequencies shall not exceed 0.15 volts peak-to-peak.

Transient excursions shall be limited to $\pm 50 \times 10^{-6}$ volt-seconds with rise and fall rates not greater than 56 volts/microsecond. The peak voltage shall not exceed ± 2 volts when measured between Station Xo585 and the Xo1307 bulkhead.

NOT APPLICABLE

7.4 PL GSE POWER AND SIGNALS

GSE power via the T-0 umbilical is independent of Orbiter power distribution subsystems. Utilization of T-0 wires for commands and signals requires that these functions meet the EMC criteria (including voltage limits) specified in Paragraph 10.7.1. GSE power shall be provided in accordance with the following paragraphs.

7.4.1 T-0 Wiring

Refer to Section 20 ~~paragraph, 20.7.~~ Section 20 deleted

Note: ~~A non-compliance condition exists between the Orbiter and the AMS-02. Refer to Section 20 for the definition of the unique interface requirement.~~

Payloads shall utilize T-0 wiring for power within the limits specified in Table 7.4.1-1. Current limiting shall be provided by the payload for each wire pair utilized, such that the limits of Table 7.4.1-1 are not exceeded. The terms "port" and "starboard" below refer to the payload T-0 wiring interface at X01203.

7.4.1.1 Port T-0 Wiring

T-0 signal accommodations shall be provided to payloads via T-0 connectors J55/J58, J67/J69, and J59.

7.4.1.2 Starboard T-0 Wiring

The entire T-0 power accommodations are provided via T-0 connector J74.

7.4.2 T-0 Power Source

The power source(s) for T-0 power, whether cargo element or STS provided, shall meet the EMC requirements specified for cargo equipment level (crew compartment) in Paragraphs 10.7.3.1.1 and 10.7.3.1.2.

~~E~~7.4.2.1 Contingency Orbiter Rollback

~~***EXCEPTION***~~
~~The following requirements are replaced in their entirety by paragraph 7.0.2.2.~~ Exception deleted
~~----------~~

Power shall be removed from the Orbiter vehicle 11 hours prior to rollback to the VAB and nominally remains off until return to the Launch Pad. Payload customers must plan on not having power-on capability for up to three days while at VAB. For anticipated stays of more than three days, the required interfaces will be connected and power will be applied to the Orbiter for health status checks only. The payload bus may be powered at this point.

Once the Orbiter vehicle is positioned in the VAB and power is applied to the MLP, payloads that have interface racks in MLP room 10A may be applied to perform some limited functions (e.g., trickle charging through the T-0 umbilical) if local control is available. Landlines to other facilities are not available. Each payload must be evaluated for T-0 capabilities.

TABLE 8.0.1.1-1 ORBITER/CARGO ELEMENT AVIONICS INTERFACE ALLOCATION

ORBITER SERVICE	REF PARA	INTERFACE TYPE / DESCRIPTION	IDD ALLOCATION	P/L USE	NOTES
MULTIPLEXER/ DEMULTIPLEXER (MDM)	8.2.2	LOW LEVEL DISCRETE OUTPUTS (DOL)	8	1	~~2)~~ 2)
~~MULTIPLEXER/ DEMULTIPLEXER (MDM)~~	~~8.2.2~~	~~LOW LEVEL DISCRETE INPUTS (DIL)~~	~~8~~	~~1~~	~~3)~~
KU-BAND SIGNAL PROCESSOR	8.2.4	TELEMETRY INPUT	0	1	

TABLE 8.0.1.1-1 ORBITER/CARGO ELEMENT AVIONICS INTERFACE ALLOCATION
(CONCLUDED)

NOTES:

1. Refer to paragraph 8.0.2.2.

~~2. Only 7 of the 11 wired DIL interfaces are utilized.~~

2) ~~3)~~. Subsequent to the baseline of this ICD, the payload requirements for this software interface were deleted. Payload software ~~could~~ will still ~~be~~ contain requirements based on timing of removal of requirement. Hardware will still wire signals to payload interface.

Based on assumption that flight software will not be updated to remove MDM DOL command, I'm proposing only updating this table so as to give a requirements trace to allow annex 4 to remain unchanged. Sections 8.0.2.2 and 9.0.2.8 will ~~not be~~ remain, as they are today. If flight software is going to be updated then sections 8.0.2.2 and 9.0.2.8 should be deleted.

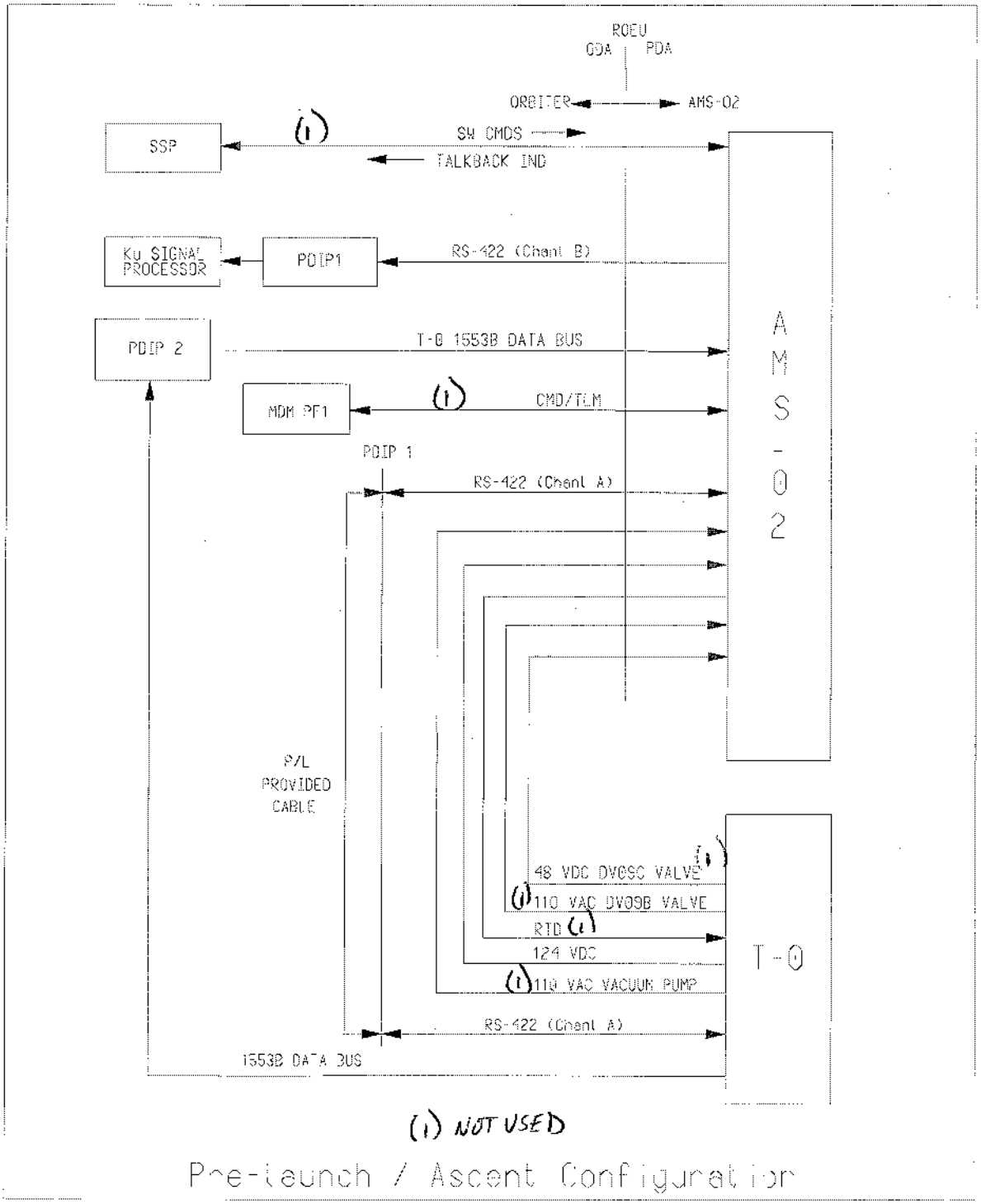

FIGURE 8.0.1.1-1 ORBITER/AMS-02 FUNCTIONAL BLOCK DIAGRAM

(SHEET 1 OF 3)

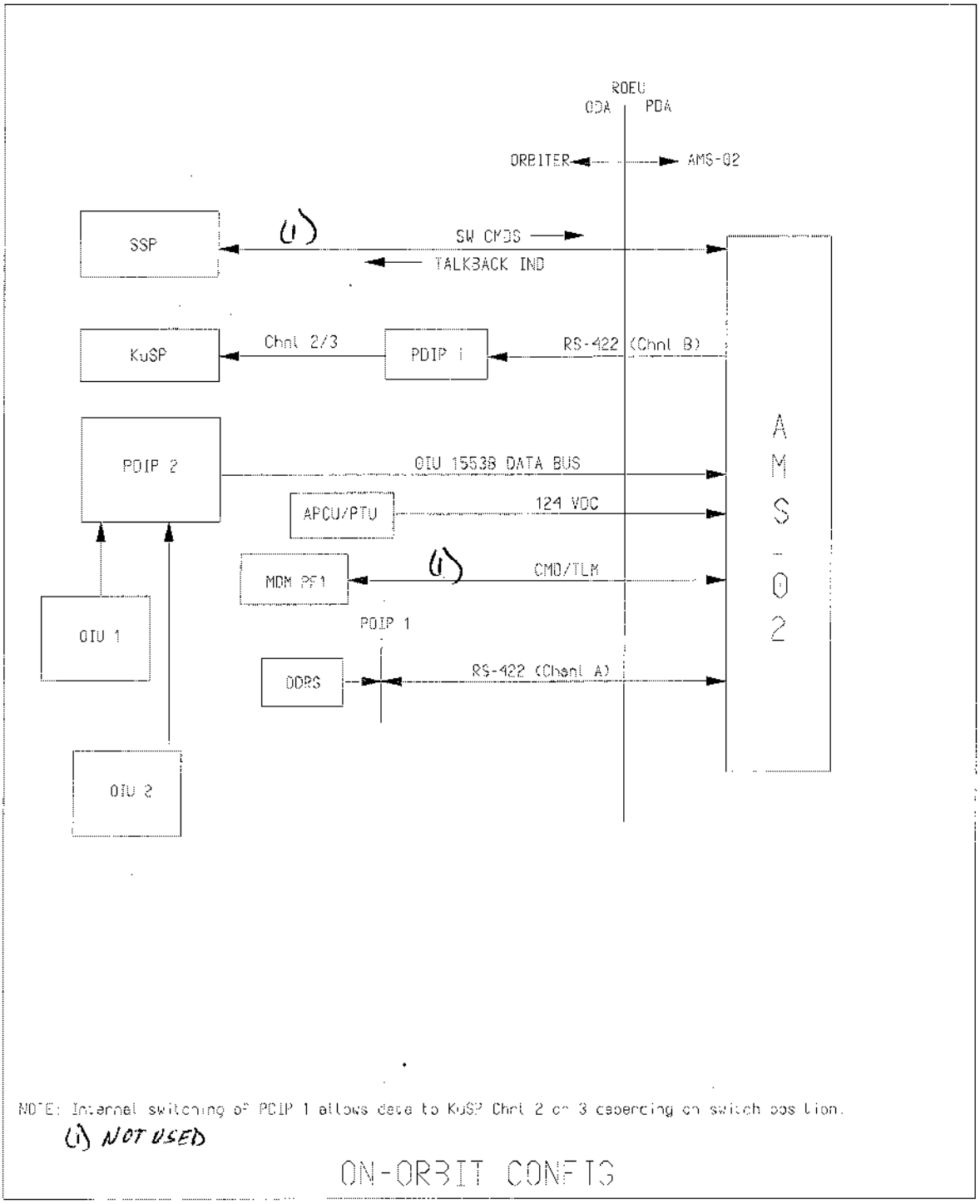

FIGURE 8.0.1.1-1 ORBITER/AMS-02 FUNCTIONAL BLOCK DIAGRAM

(SHEET 2 OF 3)

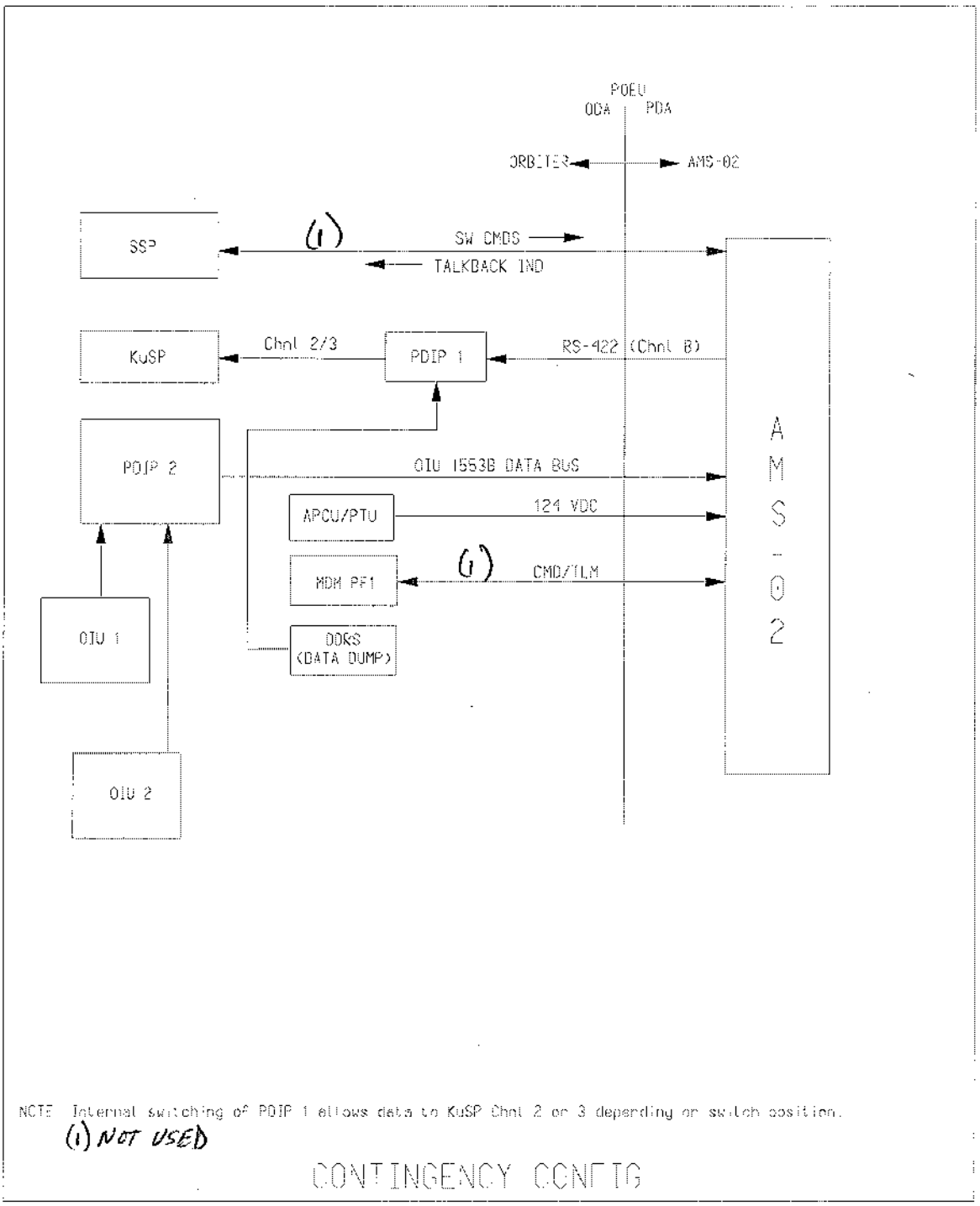

FIGURE 8.0.1.1-1 ORBITER/AMS-02 FUNCTIONAL BLOCK DIAGRAM

(SHEET 3 OF 3)

10.7 ELECTROMAGNETIC COMPATIBILITY (EMC)

10.7.1 Circuit EMEC Classification

Refer to Section 20 paragraph, 20.8. Section 20 deleted.

Note: A non-compliance condition exists between the Orbiter and the AMS-02. Refer to Section 20 for the definition of the unique interface requirement.

Circuit Electromagnetic Effects Compatibility (EMEC) Classifications are as defined in Table 10.7.1-1. As a design goal, Orbiter to payload wiring shall be bundled by common classification. Bundles of dissimilar classification shall be routed separately so as to provide 20 db isolation.

10.7.3 Cargo-Produced Emissions Environment

10.7.3.1 Cargo-Produced Conducted Noise

The Cargo-generated conducted emission limits, applicable to both low power (28 vdc) and high power (124/140 vdc) interfaces, shall be as defined in the following subparagraphs.

10.7.3.1.1 Conducted Emissions Low Voltage (28 vdc) Power NOT APPLICABLE

Low voltage power line conducted emissions in the frequency domain shall be limited to the levels indicated in Figure 10.7.3.1.1-1.

The cargo-generated transients and ripple produced on DC power lines by switching or other operations shall not exceed the limits defined in Figure 10.7.3.1.1-2 when fed from a source impedance close to but not less than the values defined in Figures 10.7.3.1.1-3 and 10.7.3.1.1-4. (The use of a battery cart is preferable to regulated DC power supplies.) Each non overlapping transient is considered independent of prior or post transients. Rise and fall times shall be greater than 1.0 microsecond. The steady state ripple voltage in the time domain shall not exceed ±0.45 volts line-to-line beyond the 28 volt D.C. nominal.

10.7.3.1.2 Conducted Emissions High Voltage Power: APCU (124/140 vdc) or PTU (124 vdc)

High voltage power line conducted emissions in the frequency domain and cargo generated transients by switching or other operations, shall not exceed the limits defined in SSP-30237 and SSP-30482.

10.7.3.2 Cargo-Produced Radiated Fields

10.7.3.2.1 Magnetic Fields

10.7.3.2.1.1 AC Magnetic Fields

The generated AC magnetic fields (applicable at a distance of 1 meter from any payload equipment) shall not exceed 130 dB above 1 picotesla (30 Hz to 2 kHz) falling 40 dB per decade to 50 kHz.

10.7.3.2.1.2 DC Magnetic Fields

The generated DC magnetic fields shall not exceed 170 dBpT at the payload envelope. This limit applies to electromagnetic and permanent magnetic devices.

10.7.3.2.2 Electric Fields

10.7.3.2.2.1 Unintentional Radiated Electric Fields

The unintentional radiated electric fields shall not exceed the levels defined in Figure 10.7.3.2.2.1-1 and Figure 10.7.3.2.2.1-2 except that the broadband emissions for cargo equipment in the cargo bay shall be limited to 70 dB above 1 microvolt/meter/mHz in the frequency range of 1770 mHz to 2300 mHz. Narrowband emissions shall be limited to 35 dB above 1 microvolt/meter from 1770 mHz to 2300 mHz, excluding any payload intentional transmitters.

- NOT WIRED - NO CONDUCTING PATH.

NOTE:

- PAYLOAD FUNCTIONS WHICH ARE NOT REQUIRED TO SUPPORT A SPECIFIC MISSION SHALL BE IDENTIFIED WITH THE NOTE "NO MATED OPERATIONAL REQUIREMENT".
- PAYLOAD FUNCTIONS WHICH SUPPORT OFFLINE CHECKOUT SHALL BE IDENTIFIED AS "GSE SUPPORT" AND SHALL INTERFACE WITH ORBITER SPARE OR NOT WIRED.
- PAYLOAD SHALL BE RESPONSIBLE TO ASSURE THAT THE INADVERTENT ACTIVATION OF A NON-OPERATIONAL FUNCTION SHALL HAVE NO ADVERSE IMPACT ON THE ORBITER OR CREW.

13.0.1.6 Cargo Element Safety Critical Circuit to Hazard Event Correlation

The NSTS-to-payload electrical interfaces which are associated with payload hazard events shall be identified as safety critical and listed in Table 13.0.1.6-1.

13.0.2 UNIQUE MISSION SPECIFIC REQUIREMENTS

13.0.2.1 PDIP-to-Payloads Pin Assignments

Connector interface definition shall be as shown in Table 13.0.2.1-1 for the PDIP1 J105 pre-launch configuration. Table 13.0.2.1-2 depicts the PDIP1 J101 pre-launch configuration and Table 13.0.2.1-3 depicts the PDIP1 J105 on-orbit configuration.

~~13.0.2.2 Standard Switch Panel (SSP) Switches~~ ← stet par. title

~~The SSP payload switching interface schematic is shown in Figure 13.0.2.2-1.~~

NOT APPLICABLE

13.0.4 ORBITER-TO-PAYLOAD DEDICATED ACCOMMODATIONS

NOT APPLICABLE

TABLE 13.0.1.3.7.3-1 ROEU INTERFACE CONNECTOR - 1

STS CONN ID/SMCH ID: P100 (ODA)
STS CONN PART NO:
P/L CONN IDENT: J100
P/L CONN PART NO: N/A
P/L CABLE NO: 46P77W190
P/L CABLE DIA (IN): N/A

EMC CLASS	PIN FUNCT	CABLE DESC	PIN NO	ORBITER FUNCTION	PAYLOAD FUNCTION	NOTES	ORBITER REQUIREMENT REFERENCE
EO	PWR	2T34	A1	~~GOE PWR~~	~~VAC PUMP 110 VAC T-0 PWR 1~~	~~4~~ ~~2~~	
			A2	NOT WIRED	NOT WIRED		
			A3	NOT WIRED	NOT WIRED		
ML	SIG	2S54	A4	SPARE	NOT WIRED		
ML	RTN	2S47	A5	~~RTD1 W2~~	~~RTD1 W2~~		
ML	SIG	2S48	A6	SPARE	NOT WIRED		
ML	RTN	2S48	A7	SPARE	NOT WIRED		
ML	SIG	2S49	A8	~~RTD1 W3~~	~~RTD1 W3~~		
ML	RTN	2S49	A9	~~RTD1 W4~~	~~RTD1 W4~~		
ML	SIG	2S50	A10	~~RTD2 W1~~	~~RTD2 W1~~		
ML	RTN	2S50	A11	~~RTD2 W2~~	~~RTD2 W2~~		
			A12	NOT WIRED	NOT WIRED		
HO	PWR	2T1	A13	+28 VDC	+28 VDC	2	
EO	RTN	2T34	A14	~~GOE PWR RTN~~	~~VAC PUMP 110 VAC T-0 PWR 1 RTN~~	~~4~~	
			A15	NOT WIRED	NOT WIRED		
			A16	NOT WIRED	NOT WIRED		
ML	RTN	2S54	A17	SPARE	NOT WIRED		
ML	SIG	2S47	A18	~~RTD1 W1~~	~~RTD1 W1~~		
ML	SIG	2S51	A19	~~RTD2 W3~~	~~RTD2 W3~~		
ML	RTN	2S51	A20	~~RTD2 W4~~	~~RTD2 W4~~		
ML	SIG	2S52	A21	SPARE	SPARE	3	
ML	RTN	2S52	A22	SPARE	SPARE	3	
ML	SIG	2S53	A23	SPARE	SPARE	3	
ML	RTN	2S53	A24	SPARE	NOT WIRED		
			A25	NOT WIRED	NOT WIRED		

SPARE

TABLE 13.0.1.3.7.3-1 ROEU INTERFACE CONNECTOR - 1 (CONCLUDED)

Notes:

1) Spare Pin(s) wired to ROEU Interface Panel.

2) ROEU control requirement (continuity) check. Not available for payload use. Jumpered to J100 Pin P1.

3) Not wired beyond P6 connector.

~~4) Safety critical parameter for prelaunch only.~~

TABLE 13.0.1.3.7.3-2 ROEU INTERFACE CONNECTOR - 2

STS CONN ID/SMCH ID: P100 (ODA)
STS CONN PART NO:
P/L CONN IDENT: J100
P/L CONN PART NO: N/A
P/L CABLE NO: 46P77W190
P/L CABLE DIA (IN): N/A

EMC CLASS	PIN FUNCT	CABLE DESC	PIN NO	ORBITER FUNCTION	PAYLOAD FUNCTION	NOTES	ORBITER REQUIREMENT REFERENCE
HO	SIG	2T2	B1	LATCH READY	LATCH READY	2	
RF	SIG	2S29	B2	KU LDR/HDR DIG +	AMS RS422 TXB (+) TO KU		
RF	RTN	2S29	B3	KU LDR/HDR DIG -	AMS RS422 TXB (-) TO KU		
RF	SIG	2S30	B4	SPARE	SPARE	3	
RF	RTN	2S30	B5	SPARE	SPARE	3	
RF	SIG	2S31	B6	SPARE	NOT WIRED		
RF	RTN	2S31	B7	SPARE	NOT WIRED		
RF	SIG	2S32	B8	SPARE	SPARE	3	
RF	RTN	2S32	B9	SPARE	SPARE	3	
RF	SIG	2S37	B10	DDRS/T-0 RS422 TXA +	AMS RS422 RXA (+) FROM DDRS/T-0	~~4~~ 2	
RF	SIG	2S38	B11	SPARE	NOT WIRED		
RF	RTN	2S38	B12	SPARE	NOT WIRED		
EO	PWR	2T35	B13	~~GSE PWR~~	~~VAC PUMP 110 VAC T-0 PWR 2~~	~~4~~	
RF	SIG	2S33	B14	SPARE	SPARE	3	
RF	RTN	2S33	B15	SPARE	SPARE	3	
RF	SIG	2S34	B16	DDRS/T-0 RS422 RXA CLK +	AMS RS422 TXA CLK (+) TO DDRS/T-0	~~4~~ 2	
RF	RTN	2S34	B17	DDRS/T-0 RS422 RXA CLK -	AMS RS422 TXA CLK (-) TO DDRS/T-0	~~4~~ 2	
RF	SIG	2S35	B18	SPARE	SPARE	3	
RF	RTN	2S35	B19	SPARE	SPARE	3	
RF	SIG	2S36	B20	DDRS/T-0 RS422 TXA CLK +	AMS RS422 RXA CLK (+) FROM DDRS/T-0	~~4~~ 2	
RF	RTN	2S36	B21	DDRS/T-0 RS422 TXA CLK	AMS RS422 RXA CLK (-) FROM DDRS/T-0	~~4~~ 2	
RF	RTN	2S37	B22	DDRS/T-0 RS422 TXA -	AMS RS422 RXA (-) FROM DDRS/T-0	~~4~~ 2	
EO	PWR	2T36	B23	~~GSE PWR~~	~~VAC PUMP 110 VAC T-0 PWR 2~~	~~4~~ 2	
EO	RTN	2T36	B24	~~GSE PWR RTN~~	~~VAC PUMP 110 VAC T-0 PWR 3 RTN~~	~~4~~ 2	
EO	RTN	2T35	B25	~~GSE PWR RTN~~	~~VAC PUMP 110 VAC T-0 PWR 2 RTN~~	~~4~~ 2	

SPARE

TABLE 13.0.1.3.7.3-2 ROEU INTERFACE CONNECTOR - 2 (CONCLUDED)

Notes:

1) Spare Pin(s) wired to ROEU Interface Panel.

2) ROEU control requirement (continuity) check. Not available for payload use. Jumpered to J100 Pin N13.

3) Not wired beyond P4 connector.

~~4) Safety Critical parameter for prelaunch only.~~

TABLE 13.0.1.3.7.3-3 ROEU INTERFACE CONNECTOR - 3

STS CONN ID/SMCH ID: P100 (ODA)
STS CONN PART NO:
P/L CONN IDENT: J100
P/L CONN PART NO: N/A
P/L CABLE NO: 46P77W190
P/L CABLE DIA (IN): N/A

EMC CLASS	PIN FUNCT	CABLE DESC	PIN NO	ORBITER FUNCTION	PAYLOAD FUNCTION	NOTES	ORBITER REQUIREMENT REFERENCE
EO	SIG	2T37	C1	~~OSB PWR 1~~	~~BV00S 48 VDC I-B PWR 1~~		
			C2	NOT WIRED	NOT WIRED		
			C3	NOT WIRED	NOT WIRED		
			C4	NOT WIRED	NOT WIRED		
ML	RTN	2S55	C5	SPARE	NOT WIRED		
ML	RTN	2S1	C6	SPARE	SPARE	3	
ML	SIG	2S1	C7	SPARE	SPARE	3	
ML	RTN	2S2	C8	SPARE	SPARE	3	
ML	SIG	2S2	C9	SPARE	SPARE	3	
ML	RTN	2S3	C10	SPARE	NOT WIRED		
ML	SIG	2S3	C11	SPARE	NOT WIRED		
ML	RTN	2S4	C12	SPARE	SPARE	3	
ML	SIG	2S4	C13	SPARE	SPARE	3	
EO	RTN	2T37	C14	~~OSB PWR RTN~~	~~BV00S 48 VDC I-B PWR 1 RTN~~		
			C15	NOT WIRED	NOT WIRED		
			C16	NOT WIRED	NOT WIRED		
ML	SIG	2S55	C17	SPARE	NOT WIRED		
ML	RTN	2S5	C18	SPARE	SPARE	3	
ML	SIG	2S5	C19	SPARE	SPARE	3	
ML	RTN	2S6	C20	SPARE	SPARE	3	
ML	SIG	2S6	C21	SPARE	SPARE	3	
ML	RTN	2S7	C22	SPARE	SPARE	3	
ML	SIG	2S7	C23	SPARE	SPARE	3	
ML	RTN	2S8	C24	SPARE	SPARE	3	
ML	SIG	2S8	C25	SPARE	SPARE	3	

SPARE

TABLE 13.0.1.3.7.3-4 ROEU INTERFACE CONNECTOR - 4

STS CONN ID/SMCH ID: P100 (ODA)
STS CONN PART NO:
P/L CONN IDENT: J100
P/L CONN PART NO: N/A
P/L CABLE NO: 46P77W190
P/L CABLE DIA (IN): N/A

EMC CLASS	PIN FUNCT	CABLE DESC	PIN NO	ORBITER FUNCTION	PAYLOAD FUNCTION	NOTES	ORBITER REQUIREMENT REFERENCE
RF	SIG	2S21	D1	SPARE	NOT WIRED		
RF	RTN	2S21	D2	SPARE	NOT WIRED		
RF	SIG	2S22	D3	SPARE	NOT WIRED		
RF	RTN	2S22	D4	SPARE	NOT WIRED		
RF	SIG	2S23	D5	SPARE	NOT WIRED		
RF	RTN	2S23	D6	SPARE	NOT WIRED		
RF	SIG	2S24	D7	SPARE	NOT WIRED		
RF	RTN	2S24	D8	SPARE	NOT WIRED		
HO	SIG	5T1	D9	SPARE	NOT WIRED		
HO	SIG	5T1	D10	SPARE	NOT WIRED		
HO	SIG	5T1	D11	SPARE	NOT WIRED		
HO	SIG	5T1	D12	SPARE	NOT WIRED		
HO	RTN	5T1	D13	SPARE	NOT WIRED		
RF	SIG	2S25	D14	SPARE	NOT WIRED		
RF	RTN	2S25	D15	SPARE	NOT WIRED		
RF	SIG	2S26	D16	SPARE	NOT WIRED		
RF	RTN	2S26	D17	SPARE	NOT WIRED		
RF	SIG	2S27	D18	RS422 DDRS/T-0 RXA +	AMS RS422 TXA (+) TO DDRS/T-0	~~2~~	
RF	RTN	2S27	D19	RS422 DDRS/T-0 RXA -	AMS RS422 TXA (-) TO DDRS/T-0	~~2~~	
RF	SIG	2S28	D20	SPARE	NOT WIRED		
RF	RTN	2S28	D21	SPARE	NOT WIRED		
RF	SIG	2S56	D22	SPARE	NOT WIRED		
RF	RTN	2S56	D23	SPARE	NOT WIRED		
EO	SIG	2T38	D24	~~GSE PWR~~	~~DV60D POWER 1~~		
EO	RTN	2T38	D25	~~GSE PWR RTN~~	~~DV60D POWER 1 RTN~~		

SPARE

TABLE 13.0.1.3.7.3-4 ROEU INTERFACE CONNECTOR - 4 (CONCLUDED)

Notes:

1) Spare Pin(s) wired to ROEU Interface Panel.

~~2) Safety Critical parameter for prelaunch only.~~

TABLE 13.0.1.3.7.3-6 ROEU INTERFACE CONNECTOR - 6

STS CONN ID/SMCH ID: P100 (ODA)
STS CONN PART NO:
P/L CONN IDENT: J100
P/L CONN PART NO: N/A
P/L CABLE NO: 46P77W190
P/L CABLE DIA (IN): N/A

EMC CLASS	PIN FUNCT	CABLE DESC	PIN NO	ORBITER FUNCTION	PAYLOAD FUNCTION	NOTES	ORBITER REQUIREMENT REFERENCE
RF	SIG	2S17	F1	SPARE	NOT WIRED		
RF	RTN	2S17	F2	SPARE	NOT WIRED		
RF	SIG	2S18	F3	SPARE	NOT WIRED		
RF	RTN	2S18	F4	SPARE	NOT WIRED		
HO	SIG	2T39	F5	SPARE	SPARE	2	
HO	RTN	2T39	F6	SPARE	SPARE	2	
HO	SIG	2T40	F7	SPARE	SPARE	2	
HO	RTN	2T40	F8	SPARE	SPARE	2	
HO	SIG	2T41	F9	SPARE	SPARE	2	
HO	RTN	2T41	F10	SPARE	SPARE	2	
HO	SIG	2T42	F11	SPARE	SPARE	2	
HO	RTN	2T42	F12	SPARE	SPARE	2	
			F13	NOT WIRED	NOT WIRED		
RF	SIG	2S19	F14	SPARE	NOT WIRED		
RF	RTN	2S19	F15	SPARE	NOT WIRED		
RF	SIG	2S20	F16	SPARE	NOT WIRED		
RF	RTN	2S20	F17	SPARE	NOT WIRED		
HO	SIG	2T43	F18	SPARE	NOT WIRED		
HO	RTN	2T43	F19	SPARE	NOT WIRED		
EO	RTN	2T44	F20	~~FAULT GND~~	~~DV03C FAULT GROUND~~		
EO	RTN	2T44	F21	~~FAULT GND~~	VACUUM PUMP/DV03B FAULT GND		
HO	SIG	2T45	F22	SPARE	SPARE	2	
HO	RTN	2T45	F23	SPARE	SPARE	2	
HO	SIG	2T3	F24	SPARE	NOT WIRED		
HO	RTN	2T3	F25	SPARE	NOT WIRED		

SPARE

TABLE 13.0.1.3.7.3-7 ROEU INTERFACE CONNECTOR - 7 (CONCLUDED)

Notes:

1) Spare Pin(s) wired to ROEU Interface Panel.

2) Not wired beyond P2 connector.

~~3) Safety Critical parameter.~~

TABLE 13.0.1.3.7.3-11 ROEU INTERFACE CONNECTOR - 11 (CONCLUDED)

Notes:

1) Spare Pin(s) wired to ROEU Interface Panel.

2) ~~Safety Critical parameter.~~ RESERVED.

3) Not wired beyond P5 connector.

4) Not wired beyond P7 connector.

TABLE 13.0.1.3.7.3-12 ROEU INTERFACE CONNECTOR - 12

STS CONN ID/SMCH ID: P100 (ODA)
STS CONN PART NO:
P/L CONN IDENT: J100
P/L CONN PART NO: N/A
P/L CABLE NO: 46P77W190
P/L CABLE DIA (IN): N/A

EMC CLASS	PIN FUNCT	CABLE DESC	PIN NO	ORBITER FUNCTION	PAYLOAD FUNCTION	NOTES	ORBITER REQUIREMENT REFERENCE
RF	RTN	2S62	M1	SPARE	NOT WIRED		
RF	SIG	2S62	M2	SPARE	NOT WIRED		
RF	SIG	2S63	M3	SPARE	NOT WIRED		
RF	RTN	2S63	M4	SPARE	NOT WIRED		
RF	SIG	2S46	M5	DATA BUS 2A	DATA BUS 2A HI	~~2~~	
RF	RTN	2S46	M6	DATA BUS 2A RTN	DATA BUS 2A LO	~~2~~	
HO	SIG	2T13	M7	SPARE	SPARE	3	
HO	RTN	2T13	M8	SPARE	SPARE	3	
HO	RTN	2T14	M9	SPARE	SPARE	3	
HO	SIG	2T14	M10	SPARE	SPARE	3	
HO	RTN	2T15	M11	SPARE	SPARE	3	
HO	SIG	2T15	M12	SPARE	SPARE	3	
			M13	NOT WIRED	NOT WIRED		
RF	SIG	2S43	M14	SPARE	NOT WIRED		
RF	RTN	2S43	M15	SPARE	NOT WIRED		
RF	SIG	2S45	M16	DATA BUS 2A TERM	DATA BUS 2A TERM		
RF	RTN	2S45	M17	DATA BUS 2A TERM	DATA BUS 2A TERM		
HO	RTN	2T16	M18	SPARE	SPARE	3	
HO	SIG	2T16	M19	~~DS16~~	~~SEHe VENT VLV PWR IND~~	~~1~~	
HO	RTN	2T17	M20	SPARE	SPARE	3	
HO	SIG	2T17	M21	SPARE	SPARE	3	
HO	RTN	2T18	M22	SPARE	SPARE	3	
HO	SIG	2T18	M23	SPARE	SPARE	3	
HO	SIG	2T19	M24	SPARE	SPARE	3	
HO	RTN	2T19	M25	SPARE	SPARE	3	

SPARE

TABLE 13.0.1.3.7.3-12 ROEU INTERFACE CONNECTOR - 12 (CONCLUDED)

Notes:

1) Spare Pin(s) wired to ROEU Interface Panel.

2) ~~Safety Critical parameter for prelaunch only~~. RESERVED.

3) Not wired beyond P7 connector.

~~4) Safety Critical parameter.~~

TABLE 13.0.1.3.7.3-13 ROEU INTERFACE CONNECTOR - 13

STS CONN ID/SMCH ID: P100 (ODA)
STS CONN PART NO:
P/L CONN IDENT: J100
P/L CONN PART NO: N/A
P/L CABLE NO: 46P77W190
P/L CABLE DIA (IN): N/A

EMC CLASS	PIN FUNCT	CABLE DESC	PIN NO	ORBITER FUNCTION	PAYLOAD FUNCTION	NOTES	ORBITER REQUIREMENT REFERENCE
HO	RTN	2T4	N1	SPARE	SPARE	4	
			N2	NOT WIRED	NOT WIRED		
			N3	NOT WIRED	NOT WIRED		
ML	SIG	2S14	N4	SPARE	NOT WIRED		
ML	SIG	5S2	N5	SPARE	NOT WIRED		
ML	SIG	5S2	N6	SPARE	NOT WIRED		
ML	SIG	5S3	N7	SPARE	NOT WIRED		
ML	SIG	5S3	N8	SPARE	NOT WIRED		
ML	SIG	5S3	N9	SPARE	NOT WIRED		
ML	SIG	5S4	N10	MDM PF-1 DOL CMD	NOT WIRED		
ML	SIG	5S4	N11	MDM PF-1 DOL CMD	~~AMS VENT VLV OPEN CMD~~		
			N12	NOT WIRED	NOT WIRED		
HO	PWR	2T2	N13	+28 VDC	+28 VDC	2	
HO	SIG	2T4	N14	SPARE	SPARE	4	
			N15	NOT WIRED	NOT WIRED		
ML	RTN	2S14	N16	SPARE	NOT WIRED		
ML	SIG	5S2	N17	SPARE	NOT WIRED		
ML	SIG	5S2	N18	SPARE	NOT WIRED		
ML	RTN	5S2	N19	SPARE	NOT WIRED		
ML	SIG	5S3	N20	SPARE	NOT WIRED		
ML	RTN	5S3	N21	MDM PF-1 DOL RTN	NOT WIRED		
ML	SIG	5S4	N22	SPARE	SPARE	5	
ML	SIG	5S4	N23	MDM PF-1 DOL CMD	SPARE	5	
ML	RTN	5S4	N24	MDM PF-1 DOL RTN	~~AMS VALVE CMD RTN~~		
			N25	NOT WIRED	NOT WIRED		

SPARE

TABLE 13.0.1.3.7.3-14 ROEU INTERFACE CONNECTOR - 14

STS CONN ID/SMCH ID: P100 (ODA)
STS CONN PART NO:
P/L CONN IDENT: J100
P/L CONN PART NO: N/A
P/L CABLE NO: 46P77W190
P/L CABLE DIA (IN): N/A

EMC CLASS	PIN FUNCT	CABLE DESC	PIN NO	ORBITER FUNCTION	PAYLOAD FUNCTION	NOTES	ORBITER REQUIREMENT REFERENCE
HO	SIG	2T1	P1	LATCH READY	LATCH READY	2	
RF	SIG	2S39	P2	SPARE	NOT WIRED		
RF	RTN	2S39	P3	SPARE	NOT WIRED		
RF	SIG	2S40	P4	SPARE	NOT WIRED		
RF	RTN	2S40	P5	SPARE	NOT WIRED		
RF	SIG	2S44	P6	SPARE	NOT WIRED		
RF	RTN	2S44	P7	SPARE	NOT WIRED		
HO	RTN	2T5	P8	RETURN	~~SPHe VENT VLV PWR 1 RTN~~	~~5~~	
HO	SIG	2T5	P9	SPARE	SPARE	4	
HO	RTN	2T6	P10	RETURN	~~SPHe VENT VLV PWR 2 RTN~~	~~5~~	
HO	SIG	2T6	P11	SPARE	SPARE	4	
HO	SIG	2T7	P12	SPARE	SPARE	4	
HO	SIG	2T7	P13	SPARE	SPARE	4	
RF	SIG	2S41	P14	DATA BUS 2B TERM	DATA BUS 2B TERM		
RF	RTN	2S41	P15	DATA BUS 2B TERM	DATA BUS 2B TERM		
RF	SIG	2S42	P16	DATA BUS 2B	DATA BUS 2B HI	~~6~~	
RF	RTN	2S42	P17	DATA BUS 2B RTN	DATA BUS 2B LO	~~2~~	
HO	SIG	2T8	P18	SPARE	SPARE	4	
HO	SIG	2T8	P19	S16 OUT PWR #1 ON	~~SPHe VENT VLV PWR 1~~	~~6~~	
HO	SIG	2T9	P20	SPARE	SPARE	4	
HO	SIG	2T9	P21	SPARE	SPARE	4	
HO	SIG	2T10	P22	S18 OUT PWR ON	~~SPHe VENT VLV PWR 2~~	~~6~~	
HO	SIG	2T10	P23	SPARE	SPARE	4	
HO	SIG	2T11	P24	SPARE	SPARE	4	
HO	SIG	2T11	P25	SPARE	SPARE	4	

SPARE

TABLE 13.0.1.3.7.3-14 ROEU INTERFACE CONNECTOR - 14 (CONCLUDED)

Notes:

1) Spare Pin(s) wired to ROEU Interface Panel.

2) ROEU control requirement (continuity) check. Not available for payload use. Jumpered to J100 Pin A13.

3) ~~Safety Critical parameter for prelaunch only.~~ RESERVED.

4) Not wired beyond P7 connector.

~~5) Safety Critical parameter.~~

TABLE 13.0.1.6-1 PAYLOAD HAZARD EVENT TABLE

HAZARDOUS EVENT	SYSTEM	PAYLOAD INTERFACE CONNECTOR	PIN NUMBER	PAYLOAD FUNCTION NOMENCLATURE	(C) COMMAND/ (M) MONITOR/ (P) POWER	NOTES
1	A	P100 (ODA)	E1	APCU/PTU PWR 124VDC	P	
1	A	P100 (ODA)	E2	APCU/PTU PWR RTN	P	
1	A	P100 (ODA)	E3	FAULT GND	P	
~~1~~	~~A~~	~~P100 (ODA)~~	~~M18~~	~~SFHe VENT VLV PWR IND~~	~~M~~	
~~1~~	~~A~~	~~P100 (ODA)~~	~~P8~~	~~SFHe VENT VLV PWR 1 RTN~~	~~P~~	
1	A	P100 (ODA)	P10	SFHe VENT VLV PWR 2 RTN	P	
1	A	P100 (ODA)	P19	SFHe VENT VLV PWR 1	P	
1	A	P100 (ODA)	P22	SFHe VENT VLV PWR 2	P	
4	A	P100 (ODA)	H1	120 VDC MN PWR CH1	P	← Keep
4	A	P100 (ODA)	H2	120 VDC MN PWR CH1 RTN	P	
4	A	P100 (ODA)	M5	DATA BUS 2A HI	C;M	
4	A	P100 (ODA)	M6	DATA BUS 2A LO	C;M	
4	A	P100 (ODA)	P16	DATA BUS 2B HI	C;M	
4	A	P100 (ODA)	P17	DATA BUS 2B LO	C;M	
4	B	P100 (ODA)	B10	AMS RS422 RXA (+) FROM DDRS/T-0	M	
4	B	P100 (ODA)	B16	AMS RS422 TXA CLK (+) TO DDRS/T-0	C	
4	B	P100 (ODA)	B17	AMS RS422 TXA CLK (-) TO DDRS/T-0	C	
4	B	P100 (ODA)	B20	AMS RS422 RXA CLK (+) FROM DDRS/T-0	M	
4	B	P100 (ODA)	B21	AMS RS422 RXA CLK (-) FROM DDRS/T-0	M	
4	B	P100 (ODA)	B22	AMS RS422 RXA (-) FROM DDRS/T-0	M	
4	B	P100 (ODA)	D18	AMS RS422 TXA (+) TO DDRS/T-0	C	
4	B	P100 (ODA)	D19	AMS RS422 TXA (-) TO DDRS/T-0	C	
4	B	P100 (ODA)	H3	120 VDC MN PWR CH2	P	← Keep
4	B	P100 (ODA)	H4	120 VDC MN PWR CH2 RTN	P	
4	B	J105	2	AMS RS422 TXA CLK (+) TO T-0 GSE	C	
4	B	J105	4	AMS RS422 TXA CLK (-) TO T-0 GSE	C	
4	B	J105	6	AMS RS422 RXA CLK (+) FROM T-0 GSE	M	
4	B	J105	8	AMS RS422 RXA CLK (-) FROM T-0 GSE	M	
4	B	J105	10	AMS RS422 RXA (+) FROM T-0 GSE	M	
4	B	J105	12	AMS RS422 RXA (-) FROM T-0 GSE	M	
4	B	J105	14	AMS RS422 TXA (+) TO T-0 GSE	C	
4	B	J105	16	AMS RS422 TXA (-) TO T-0 GSE	C	
4	B	J101	2	AMS RS422 TXA CLK (+) TO T-0 GSE	C	
4	B	J101	4	AMS RS422 TXA CLK (-) TO T-0 GSE	C	
4	B	J101	6	AMS RS422 RXA CLK (+) FROM T-0 GSE	M	
4	B	J101	8	AMS RS422 RXA CLK (-) FROM T-0 GSE	M	
4	B	J101	10	AMS RS422 RXA (+) FROM T-0 GSE	M	
4	B	J101	12	AMS RS422 RXA (-) FROM T-0 GSE	M	
4	B	J101	14	AMS RS422 TXA (+) TO T-0 GSE	C	
4	B	J101	16	AMS RS422 TXA (-) TO T-0 GSE	C	
5	A	P100 (ODA)	A1	VAC PUMP 110 VAC T-0 PWR 1	P	3
5	A	P100 (ODA)	A14	VAC PUMP 110 VAC T-0 PWR 1 RTN	P	4
5	A	P100 (ODA)	B13	VAC PUMP 110 VAC T-0 PWR 2	P	5
5	A	P100 (ODA)	B23	VAC PUMP 110 VAC T-0 PWR 3	P	6
5	A	P100 (ODA)	B24	VAC PUMP 110 VAC T-0 PWR 3	P	7

TABLE 13.0.1.6-1 PAYLOAD HAZARD EVENT TABLE

HAZARDOUS EVENT	SYSTEM	PAYLOAD INTERFACE CONNECTOR	PIN NUMBER	PAYLOAD FUNCTION NOMENCLATURE	(C) COMMAND/ (M) MONITOR/ (P) POWER	NOTES
				RTN		
5	A	P100 (ODA)	B25	VAC PUMP 110 VAC T-0 PWR 2 RTN	P	8

TABLE 13.0.1.6-1 PAYLOAD HAZARD EVENT TABLE (CONCLUDED)

Notes:

1) HAZARD EVENT

1 - Mating/demating of ROEU may lead to arcing/sparking that could cause damage to Flight Hardware (connector pins) and/or EMU damage. (Ref. Hazard Report No. AMS-02-F08 and CARGO-011)

Hazard Control/Monitoring:
a. Arcing/sparking during ROEU mate/demate operations will be controlled through fault tolerance. Connector design features and labeling will provide additional control.
b. Power will be off before mating/demating of the ROEU.

2 - Rupture/Explosion of the vacuum case and/or SFHe pressure system results in significant damage to/loss of the STS, ISS, crew and/or other payloads. (Ref. Hazard Report No. AMS-02-F03)

Hazard Control/Monitoring:
a. The Loss of Vacuum failure mode has been controlled by the design of the vacuum case construction.
b. Trend Data will be utilized to establish cryo system health status prior to launch.

3 - The AMS-02 radiates energy fields by way of RF and magnetic fields that may have a hazardous effect on Orbiter Systems, ISS systems and equipment (SSRMS, SPDM), Extravehicular Mobility Unit (EMU), Russian Orlan Suit, Simplified Aid for EVA Rescue (SAFER), EVA tools (including the Pistol Grip Tool) and other safety critical subsystems. (Ref. Hazard Report No. AMS-02-F07)

Hazard Control/Monitoring:
a. There is no plan to initiate charging of the AMS-02 cryogenic magnet while in the shuttle, prior to launch or after.
b. AMS-02 systems will be monitored prior to launch up to L-9 minutes or later to confirm that the AMS-02 Cryomagnet is operationally quiescent.

4 - See Hazard Event 2 and 3.

5 - Improper deadfacing (hot demate) of the Tail Service Mast (TSM) T-0 umbilical could create an ignition source that could in the presence of flammable fluids lead to fire/explosion with resulting loss of vehicle and crew. (Ref. Systems Integration Hazard report, ISPR-03, Cause E).

Hazard Control/Monitoring:
a. Connector Design and certification.
b. Deadfacing of connectors as per OMRSD requirement S00FP0.060 - Integrated Vehicle GSE Power OFF Command Removal Verification. The intent of this OMRSD is to remove commands and verify status for removal of GSE main bus electrical power prior to T-0 umbilical carrier plate separation.

2) SYSTEM

A - System A (Primary Hazard Control)

B - System B (Secondary Hazard Control)

~~3) ROEU ODA pin A1 wired to T-0 J58 pin *Z~~
~~4) ROEU ODA pin A14 wired to T-0 J58 pin *J~~

~~5) ROEU ODA pin B13 wired to T-0 J58 pin *M~~
~~6) ROEU ODA pin B23 wired to T-0 J58 pin *N~~
~~7) ROEU ODA pin B24 wired to T-0 J58 pin *P~~
~~8) ROEU ODA pin B25 wired to T-0 J58 pin *K~~

TABLE 13.0.2.1-1 STS/PAYLOAD PIN ASSIGNMENTS AT PDIP1 CONNECTOR J105 (PRE-LAUNCH CONFIGURATION)

STS CONN ID/SMCH ID: J105
STS CONN PART NO: ME414-0630-4001
P/L CONN IDENT: P105
P/L CONN PART NO: NLS6GT12-35P
P/L CABLE NO: SED39136112-302
P/L CABLE DIA (IN): N/A

EMC CLASS	PIN FUNCT	CABLE DESC	PIN NO	ORBITER FUNCTION	PAYLOAD FUNCTION	NOTES	ORBITER REQUIREMENT REFERENCE
			1	OIU1 FUNCTION	NOT WIRED		
RF	SIG	2S1	2	T-0 RS422 RXA CLK +	AMS RS422 TXA CLK (+) TO T-0 GSE	1,2	
			3	OIU1 FUNCTION	NOT WIRED		
RF	RTN	2S1	4	T-0 RS422 RXA CLK -	AMS RS422 TXA CLK (-) TO T-0 GSE	1,2	
			5	OIU1 FUNCTION	NOT WIRED		
RF	SIG	2S4	6	T-0 RS422 TXA CLK +	AMS RS422 RXA CLK (+) FROM T-0 GSE	1,2	
			7	OIU1 FUNCTION	NOT WIRED		
RF	RTN	2S4	8	T-0 RS422 TXA CLK -	AMS RS422 RXA CLK (-) FROM T-0 GSE	1,2	
			9	OIU1 FUNCTION	NOT WIRED		
RF	SIG	2S2	10	T-0 RS422 TXA +	AMS RS422 RXA (+) FROM T-0 GSE	1,2	
			11	OIU1 FUNCTION	NOT WIRED		
RF	RTN	2S2	12	T-0 RS422 TXA -	AMS RS422 RXA (-) FROM T-0 GSE	1,2	
			13	OIU1 FUNCTION	NOT WIRED		
RF	SIG	2S3	14	T-0 RS422 RXA +	AMS RS422 TXA (+) TO T-0 GSE	1,2	
			15	OIU1 FUNCTION	NOT WIRED		
RF	RTN	2S3	16	T-0 RS422 RXA -	AMS RS422 TXA (-) TO T-0 GSE	1,2	
			17	OIU1 FUNCTION	NOT WIRED		
			18	NOT WIRED	NOT WIRED		
			19	OIU1 FUNCTION	NOT WIRED		
			20	NOT WIRED	NOT WIRED		
			21	OIU1 FUNCTION	NOT WIRED		
			22	NOT WIRED	NOT WIRED		

TABLE 13.0.2.1-1 STS/PAYLOAD PIN ASSIGNMENTS AT PDIP1 CONNECTOR J105 (PRE-LAUNCH CONFIGURATION) (CONCLUDED)

Notes:

1) Wiring for PDIP1 J105 pins jumpered to same pins, respectively on PDIP1 J101 via payload provided cable.

~~2) Safety Critical parameter.~~

TABLE 13.0.2.1-2 STS/PAYLOAD PIN ASSIGNMENTS AT PDIP1 CONNECTOR J101 (PRE-LAUNCH CONFIGURATION)

STS CONN ID/SMCH ID: J101
STS CONN PART NO: ME414-0630-4001
P/L CONN IDENT: P101
P/L CONN PART NO: NLS6GT12-35P
P/L CABLE NO: SED39136112-302
P/L CABLE DIA (IN): N/A

EMC CLASS	PIN FUNCT	CABLE DESC	PIN NO	ORBITER FUNCTION	PAYLOAD FUNCTION	NOTES	ORBITER REQUIREMENT REFERENCE
			1	OIU2 FUNCTION	NOT WIRED		
RF	SIG	2S1	2	T-0 RS422 RXA CLK +	AMS RS422 TXA CLK (+) TO T-0 GSE	1,2	
			3	OIU2 FUNCTION	NOT WIRED		
RF	RTN	2S1	4	T-0 RS422 RXA CLK -	AMS RS422 TXA CLK (-) TO T-0 GSE	1,2	
			5	OIU2 FUNCTION	NOT WIRED		
RF	SIG	2S4	6	T-0 RS422 TXA CLK +	AMS RS422 RXA CLK (+) FROM T-0 GSE	1,2	
			7	OIU2 FUNCTION	NOT WIRED		
RF	RTN	2S4	8	T-0 RS422 TXA CLK -	AMS RS422 RXA CLK (-) FROM T-0 GSE	1,2	
			9	OIU2 FUNCTION	NOT WIRED		
RF	SIG	2S2	10	T-0 RS422 TXA +	AMS RS422 RXA (+) FROM T-0 GSE	1,2	
			11	OIU2 FUNCTION	NOT WIRED		
RF	RTN	2S2	12	T-0 RS422 TXA -	AMS RS422 RXA (-) FROM T-0 GSE	1,2	
			13	OIU2 FUNCTION	NOT WIRED		
RF	SIG	2S3	14	T-0 RS422 RXA +	AMS RS422 TXA (+) TO T-0 GSE	1,2	
			15	OIU2 FUNCTION	NOT WIRED		
RF	RTN	2S3	16	T-0 RS422 RXA -	AMS RS422 TXA (-) TO T-0 GSE	1,2	
			17	OIU2 FUNCTION	NOT WIRED		
			18	NOT WIRED	NOT WIRED		
			19	OIU2 FUNCTION	NOT WIRED		
			20	NOT WIRED	NOT WIRED		
			21	OIU2 FUNCTION	NOT WIRED		
			22	NOT WIRED	NOT WIRED		

TABLE 13.0.2.1-2 STS/PAYLOAD PIN ASSIGNMENTS AT PDIP1 CONNECTOR J101 (PRE-LAUNCH CONFIGURATION) (CONCLUDED)

Notes:

1) Wiring for PDIP1 J101 pins jumpered to same pins, respectively on PDIP1 J105 via payload provided cable.

~~2) Safety Critical parameter.~~

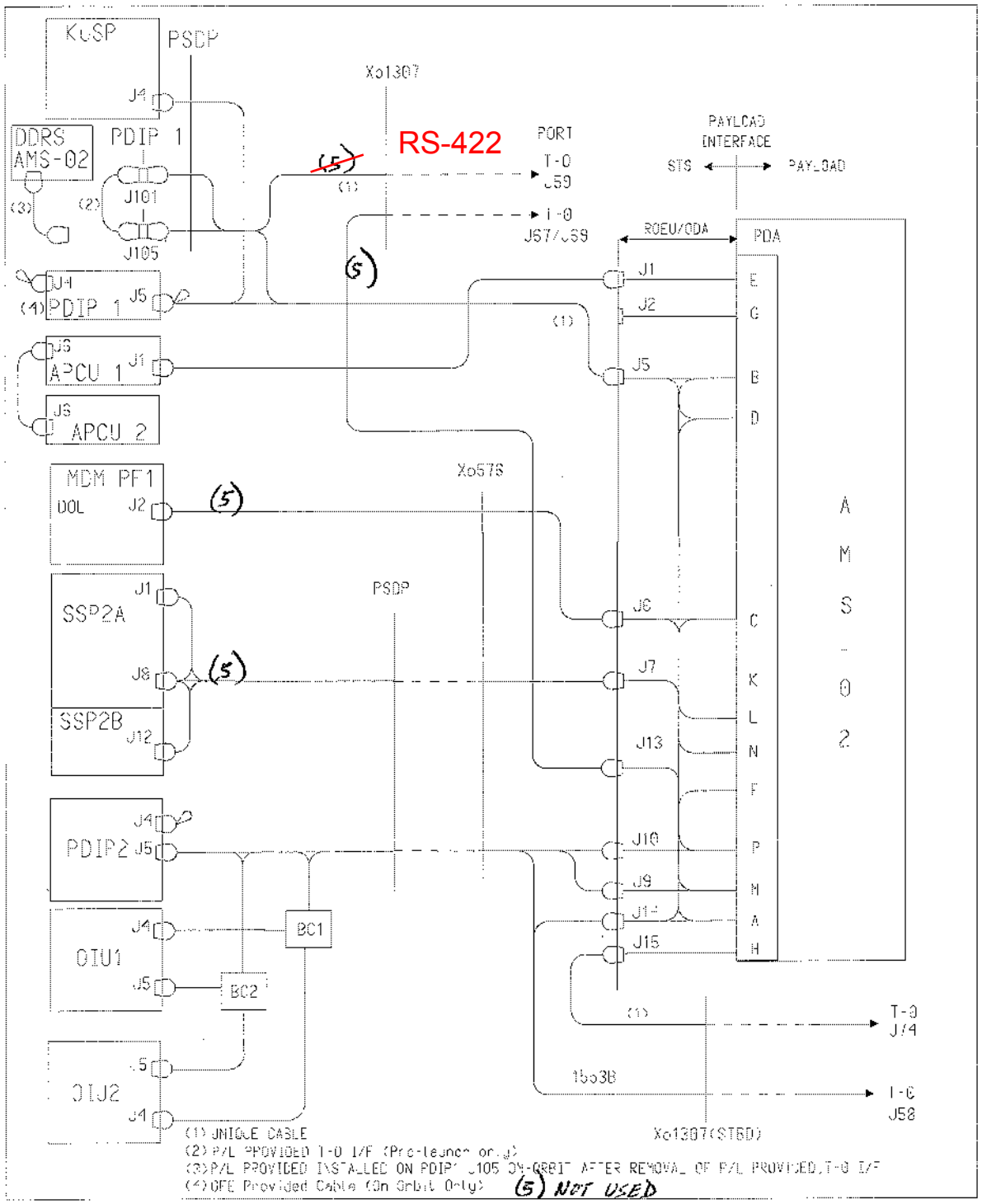

FIGURE 13.0.1.1-1 ORBITER-TO-CARGO ELEMENT CABLE INTERFACE DIAGRAM (APCU)

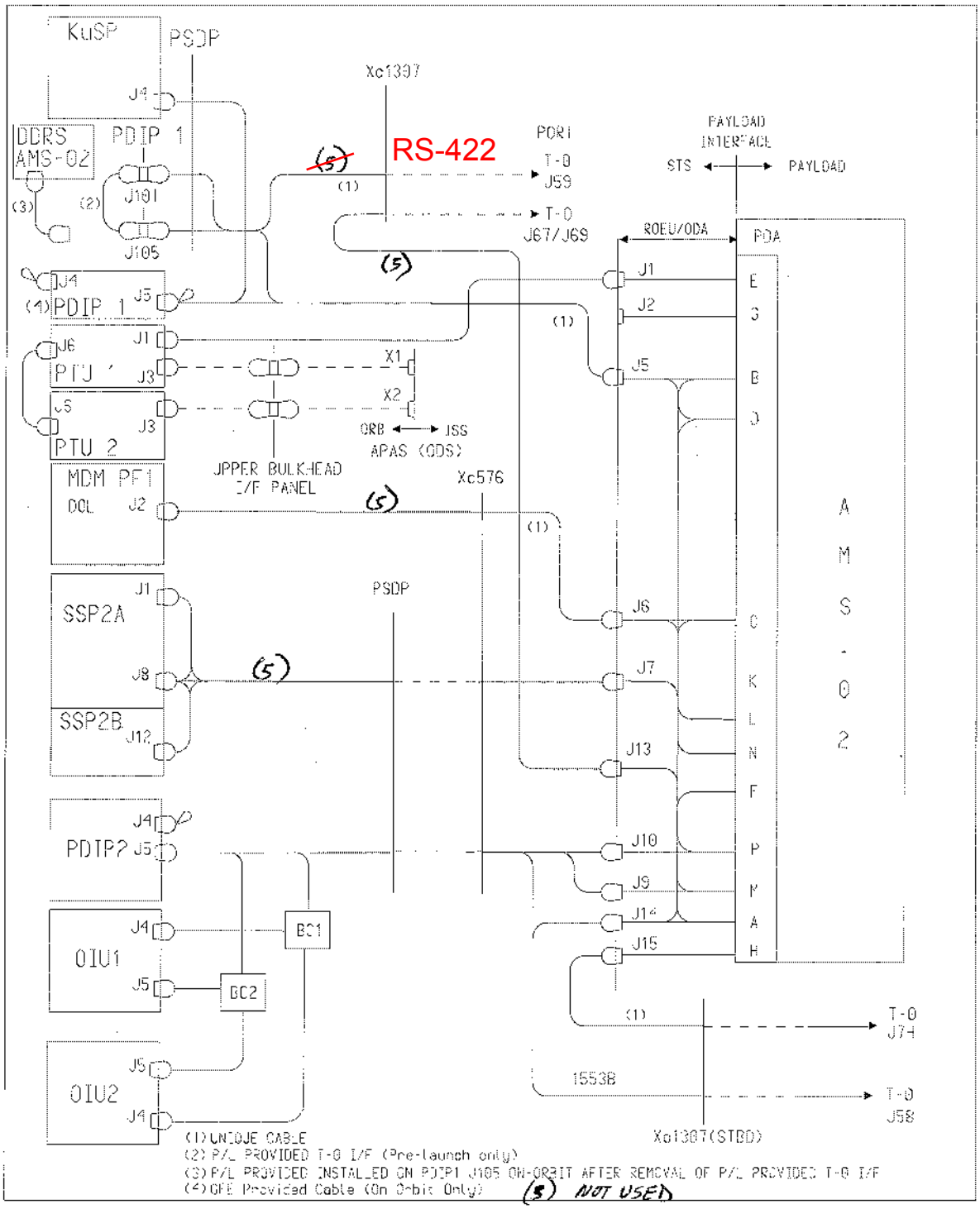

FIGURE 13.0.1.1-2 ORBITER-TO-CARGO ELEMENT CABLE INTERFACE DIAGRAM (SSPTS-PTU)

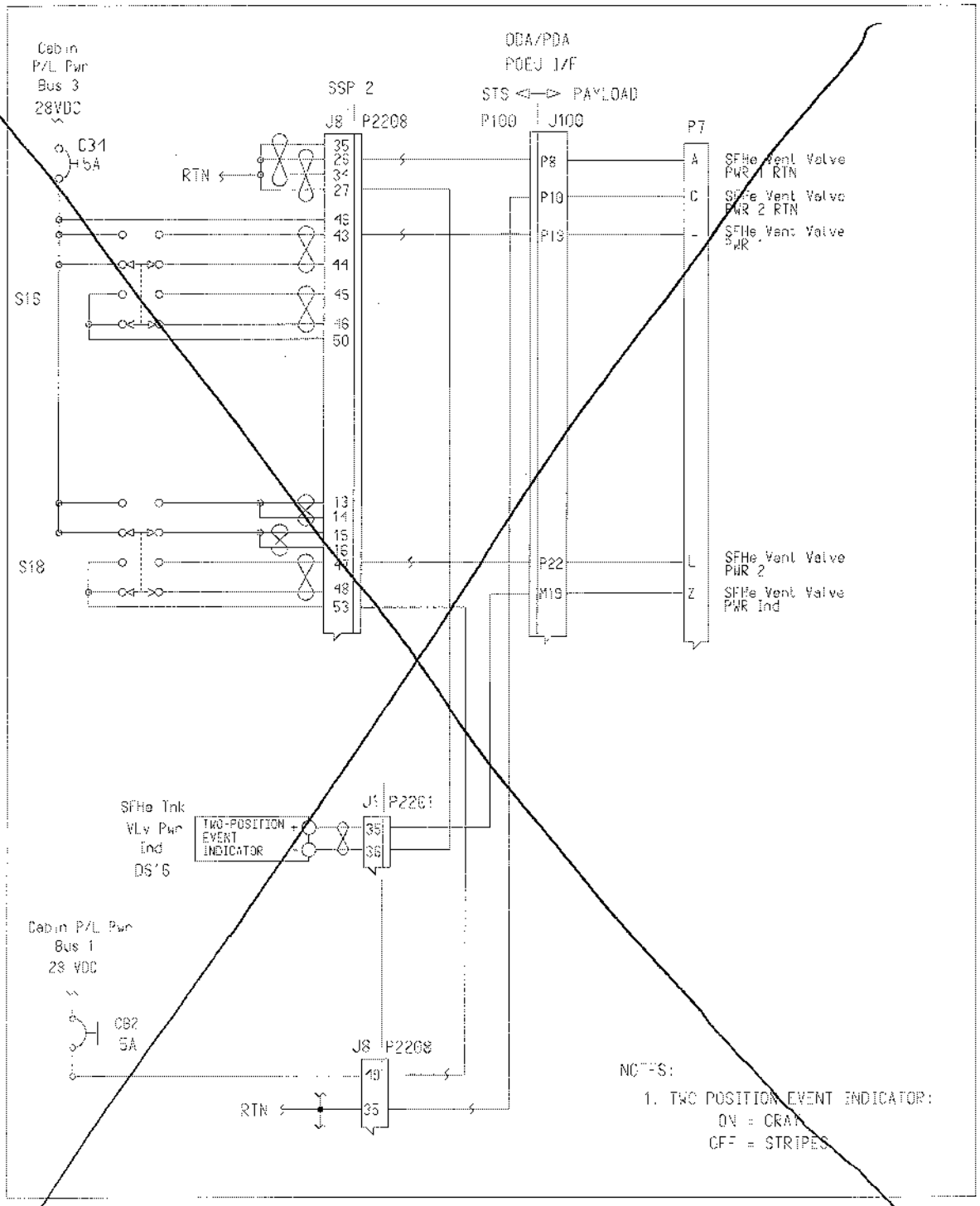

FIGURE 13.0.2.2-1 STANDARD SWITCH PANEL PAYLOAD SWITCHING INTERFACE SCHEMATIC

13.3 CONNECTOR/INTERFACES

13.3.1 Pin Assignments

13.3.1.1 PDIP Interfaces

Connectors and pin assignments are defined in Tables 13.3.1.1-1 through 13.3.1.1-9.

13.3.1.2 ROEU Interfaces

Connectors and pin assignments are defined in Tables 13.3.1.2-1 through 13.3.1.2-14. Additional connector information for the ISS Standard PDA and the Modified ISS Standard PDA is available in Table 13.3.1.2-15 and Table 13.3.1.2-16, respectively.

13.3.1.3 (DELETED)

13.3.1.4 (DELETED)

13.3.1.5 Non-ROEU Cargo Bay 124 Vdc Power Interfaces

NOT APPLICABLE

13.4 STANDARD PAYLOAD DATA AND CONTROL INTERFACE (SPDCI)

13.4.1 Standard Switch Panel (SSP)

NOT APPLICABLE

The SPDCI shall provide two Standard Switch Panels (SSP) for cargo element use. Each SSP shall provide switching, circuit breaking, fusing and statusing for cargo element use, as well as limited capability for controlling the conduct of experiments, and power control for pallets. SSP payload switching and statusing interface schematics are shown in figure 13.4.1-1 and 13.4.1-2, respectively. The SSP circuit protection and power distribution is as shown in Figure 13.4.1-3. Also identified, for reference purposes, are the connector/pin terminations at the cargo end of the standard mixed cargo harness in the AFD. The roundtrip circuit resistance between the SSP and the cargo element interface shall not exceed 4.0 ohms (1.0 ohm when four parallel wires are used). All wire within the SSP is 22AWG unless otherwise noted. SSP component characteristics shall be as shown in Table 13.4.1-1 and Table 13.4.1-2 and the following specifications:

Toggle Switch	ME452-0102
Circuit Breaker	MC454-0026
Fuse	ME451-0018
Event Indication	MC432-0222

Exceedance: The AMS-02 payload element protrudes beyond the 90 inch payload thermal and dynamic envelope creating a non-compliance condition. These protrusions are identified in Figure 3.0.1.1-1.

Rationale: For all items shown in Figure 3.0.1.1-1:
Based on a dynamic clearance assessment using DCLA results, documented in CINS-TM-09-074, adequate dynamic clearance exists for all the above items to the nearest Orbiter structure.

Final acceptability of this condition will be provided by the Certification of Flight Readiness (CoFR) process and will be based upon the minimum dynamic clearance calculated using the results from the final mission specific Verification Loads Analysis (VLA) cycle and digital measurements of the payload hardware if applicable. The final minimum dynamic clearance will be documented in the final VLA report and or addendum for this mission.

B. 90 INCH ENVELOPE INTRUSIONS
(Ref. Para. 3.1.2.1.1 and Figure 3.0.1.1-2)

Exceedance: The orbiter wire tray hardware and the OBSS intrude into the 90 inch payload thermal and dynamic envelope creating a non-compliance condition. These protrusions are identified in Figure 3.0.1.1-2.

Rationale: For all items shown in Figure 3.0.1.1-2:
Based on a dynamic clearance assessment using DCLA results, documented in CINS-TM-09-074, adequate dynamic clearance exists for all the above items to the nearest AMS-02 structure.

Final acceptability of this condition will be provided by the Certification of Flight Readiness (CoFR) process and will be based upon the minimum dynamic clearance calculated using the results from the final mission specific Verification Loads Analysis (VLA) cycle and digital measurements of the payload hardware if applicable. The final minimum dynamic clearance will be documented in the final VLA report and or addendum for this mission.

Authority: CR/DIR A05758

Effectivity: AMS-02 Mission

20.7 T-0 WIRING
(Ref. Para. 7.4.1 and Table 7.4.1-1)

A) DELETE

Requirement: Payloads shall utilize T-0 wiring for power within the limits specified in Table 7.4.1-1. Table 7.4.1-1 specifies connector J58 as "H0" EMC Class with DC voltage.

Exceedance: T-0 interface connector J58 will be used to supply 110 VAC power and 48 VDC control (EO signals) to AMS-02, in addition to being the interface for the 1553B data bus.

Rationale: Table 7.4.1-1 specifies that the maximum current per wire segment for T-0 J58 is 14 amperes at 100 VDC. The 48 VDC DV09C control signal is within these limits (250 milliamp) but by definition is classified as an EO signal. The payload also requires 632VA of power at 110 VAC which equates to less than 6 amperes. Although the operational voltage limit stated in the table is exceeded, the combined power capability is not exceeded. Additionally, the cabling and connectors are certified to withstand a minimum of

1500 VDC. Exceedance 20.8 establishes the rationale for acceptance to use the AC EO classification within this connector along with other signals with different EMC classifications.

Authority: CR/DIR A05802, A05826

Effectivity:AMS-02 Mission

20.8 CIRCUIT EMEC CLASSIFICATION
(Ref. Para. 10.7.1)

DELETE

Requirement: Bundles of dissimilar EME classification shall be routed separately so as to provide 20 db isolation.

Exceedance: The AMS-02 T-0 wire harnesses violate the separation requirements and do not meet the 20 db isolation requirement. The harnesses involved contain four EO (110 VAC) signals, one EO (48 VDC) signal and two RF (1553) signals that run from a room internal to the Mobile Launch Platform (MLP) to the AMS-02 using starboard T-0 connector J58.

Rationale: During start up and shutdown of the vacuum pump, it is probable that interference with the 1553 command/telemetry signals will occur. However, this expected interference can be tolerated by the AMS-02 Program based on the planned timeline for the vacuum pump runtime versus the exchange of command/telemetry signals. The vacuum pump, once turned-on, stays on until approximately L-30 minutes prior to launch. The expected interference with 1553 signals would be limited to a turn-on interval of about 0.5 msec and a comparable turn-off interval at shutdown of the pump. The interference with 1553 signals for such short periods is not viewed as a detrimental issue by the AMS-02 Program.
The DV09C evacuating valve (DC) and the DV09B isolation valve (AC) will be operated concurrently with the vacuum pump. The DV09C power signal noise effect on the 1553 command/telemetry signals is negligible due to its DC nature (non-time varying) and low current draw of only 250 milliamperes. The DV09B power signal noise effect on the 1553 lines will be additive to the level provided by the three vacuum pump power leads. However, this represents an increase in coupled noise level of only 5.3% and will not be an issue.

Authority: CR/DIR A05802, A05826

Effectivity:AMS-02 Mission