Appendix C

Materials Usage Agreements/Certifications

LIST OF MATERIAL USAGE AGREEMENTS/ CERTIFICATIONS

1. 7050-T7451/T7452 Parts in USS, VC, PAS, and ROEU of Alpha Magnetic Spectrometer- 02 (AMS-02), Usage Agreement AG 577 ..... C-3

2. Al 5083-H111 and 5083-H321 Parts Used in Helium Tank of Alpha Magnetic Spectrometer-02 (AMS-02), Usage Agreement AG 594 ..... C-9

3. JSC Materials and Fracture Control Certification, REF: MATL-09-036, Alpha Magnetic Spectrometer (AMS-02) Data Interface hardware C-13

4. Utilization of Aluminum Alloy 7175 T 7351, MUA PI-217 ..... C-17

5. Electromagnetic Calorimeter (ECAL), Alpha Magnetic Spectrometer-02 (AMS-02), MUA ESCG/ISS-256 ..... C-39

6. Lexan Decals, Alpha Magnetic Spectrometer 02 (AMS-02), MUA ESCG/ISS-255 ..... C-47

7. Utilization of Synolite 0612-N-1, MUA PI 524 ..... C-51

8. Al 7050-T7451 Parts in Transition Radiation Detector (TRD) Gas Supply System, AMS-02, MUA ESCG/ISS-257 ..... C-54

9. JSC Materials and Fracture Control Certification, REF: MATL-11-09A, Alpha Magnetic Spectrometer -02 (AMS-02) Payload Assembly C-60

ISS MATERIALS USAGE AGREEMENT	USAGE AGREEMENT NO.	REV.	PAGE 1 OF 2
	AG 577		

TITLE:	CATEGORY:	EFFECTIVITY:
7050-T7451/T7452 Parts in USS, VC, PAS, and ROEU of Alpha Magnetic Spectrometer- 02 (AMS-02)	2	STS-134

TYPE OF DEVIATION:	REQUIREMENT DEVIATED:		
☒ MATERIAL ☐ EQUIPMENT (NO. PER VEHICLE: 1)	☐ FLAMMABILITY	☐ TVS	☒ SCC
	☐ OFFGASSING	☐ O_2 COMPATIBILITY	☐ OTHER

EQUIPMENT	PART NUMBER	MANUFACTURER
	See Table I of Attachment 1	

MATERIAL	TRADE NAME	SPECIFICATION	MANUFACTURER
See Table I of Attachment 1		See Table I of Attachment 1	

THICK (in.)	WEIGHT (lbs.)	AREA (in^2)	LOCATION	ENVIRONMENT		
				TEMPERATURE (°F)	PRESS (PSIA)	MEDIA
			☐ HABITABLE ☒ NONHABITABLE	-58 F to +140 F	Space Vacuum	Vacuum

APPLICATION (use second sheet if required)

The AMS-02 is an ISS experiment payload, which will be attached to ISS S3 Zenith Inboard Payload Attachment System (PAS). It uses a large cryogenic superconducting magnet and several high energy particle detector systems to collect cosmic ray data. Its major subsystems include the Unique Support Structure (USS)-02, Vacuum Case (VC), Synchrotron Radiation Dector (SRD), Transition Radiation Detector (TRD), Anti-Coincidence Counter (ACC), Time of Flight (TOF) Detector, Silicon Tracker, Cryogenic Superconducting Magnet, Ring Imaging Cherenkov Counter (RICH), and Electromagnetic Calorimeter (ECAL). The AMS-02 payload configuration for launch, landing, and on-orbit is shown in Figure 1, Attachment 1. The USS-02 is the primary structural element of the AMS-02 payload. The USS-02 consists of five subassemblies- the upper USS-02, VC, lower USS-02, Payload Attach System (PAS), and Keel. An explored view of the USS-02 is shown in Figure 2, Attachment 1. The VC supports the Cryomagnet cold mass by sixteen

(Continued on next page)

RATIONALE (use second sheet if required)

The rationale for the use of the Al alloy 7050-T7451 parts in the AMS-02 payload is as follows:

- Aluminum alloy 7050-T7451 is stronger than aluminum alloy 7075-T7351 (Table I material for SCC) and has design allowables for thick plate stocks (greater than 4 inches) in Metallic Materials Properties Development and Standardization (MMPDS) Handbook.
- The sustained tensile stresses of these 7050-T7451 parts are less than the SCC threshold stress for 7050-T7451 Al alloy.
- These 7050-T7451 parts have adequate corrosion protection surface finish and are protected from long exposure to corrosive environments.
- These 7050-T7451 parts are used in benign use environment (space vacuum).

APPROVALS

ORIGINATOR/ORGANIZATION	DATE	JSC MATERIALS AND PROCESSES TECHNOLOGY BRANCH	DATE
Chia-Chang Au Yang	9/25/09	Julie A. Henkener	9-25-09
PROJECT MANAGER	**DATE**	**PROGRAM MANAGER**	**DATE**
	28 Sep 2009		

JSC Form 1466 (Rev June 93) NASA-JSC

Carl Lauritzen 09-28-2009

ISS MATERIALS USAGE AGREEMENT	USAGE AGREEMENT NO. AG577	REV.	PAGE 2 OF 2

TITLE:	CATEGORY:	EFFECTIVITY:
Alpha Magnetic Spectrometer 02 (AMS-02)	2	STS-134

APPLICATION (Cont.)

composite straps and serves as a vacuum jacket for the superfluid helium tank. The VC attaches to the USS-02 via eight interface plates and two clevis plates. The 7050-T7451 Al alloy is used in several structural components of the USS, VC, PAS, and Remotely Operated Electrical Umbilical (ROEU) provided by NASA Johnson Space Center for AMS-02. A list of 7050-T7451 parts provided by NASA JSC is shown in Table I, Attachment 1. The 7050-T7451 (or its equivalent 7050-T73651designation) Al alloy is a Table II material with moderate resistance to SCC per MSFC-STD-3029, Guidelines for the Selection of Metallic Materials for Stress Corrosion Resistance in Sodium Chloride Environments. This MUA provides the acceptance ratioale for the use of these 7050-T7451 parts in the AMS-02 payload.

JSC Form 1466 (Rev June 93) NASA-JSC

Attachment 1

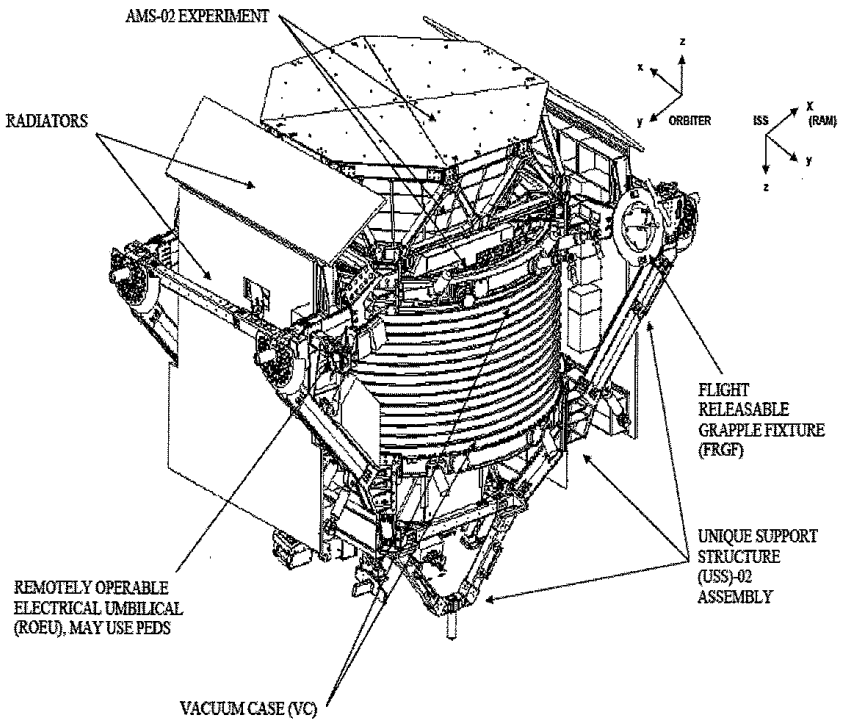

Figure 1 : AMS-02 Payload Configuration- Launch, Landing, and On-Orbit

Attachment 1 (Cont.)

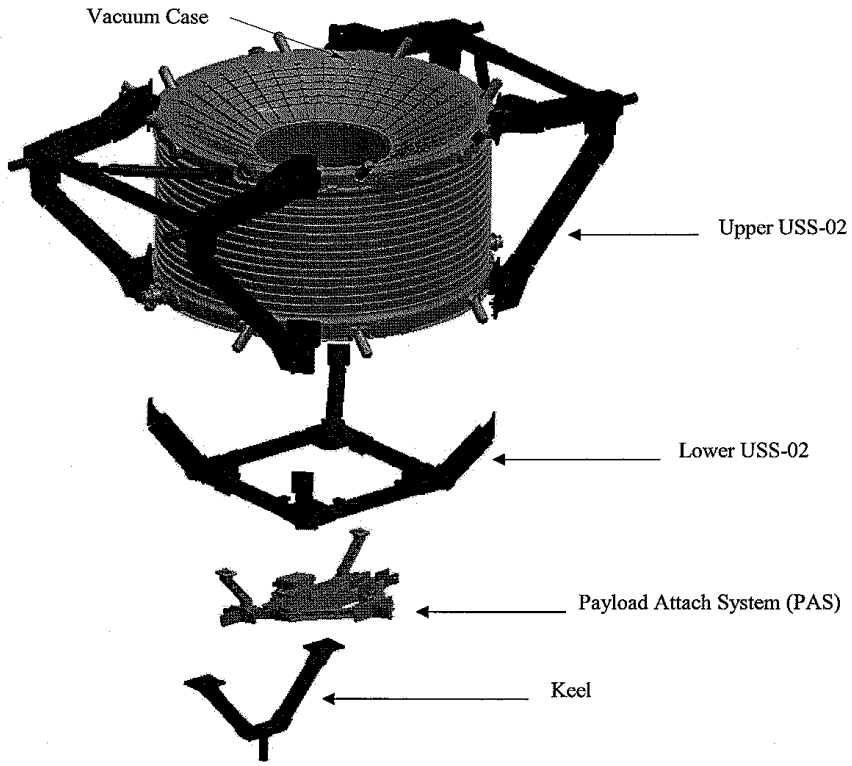

Figure 2: An explored view of USS-02 showing its subassemblies

Attachment 1 (Cont.)

Table I: List of 7050-T7451/T7452 Parts Provided by JSC for AMS-02 Payload

Item No.	Subsystem	Part Name	Part Number	Material	Specification	Dimensions, Inches (LxWxH)	Engineering Drawing	Yield Stress, Fty (ksi)*	SCC Threshold Stress (ksi)**	Sustained Tensile Stress (ksi)
1	VC	Outer Cylinder, Vacuum Case Assy	SDG39135779	AL 7050-T7452 Rolled Ring Forging	AMS 4108	OD= 109", ID=105", L=53"	https://edcc.jsc.nasa.gov/dbase/edrspub/repository/39/SDG39135779__A_0.PDF	S-basis 55 in ST or Radial dir	35 in ST dir	6.9
2	VC	Lower Support Ring, Vacuum Case Assy	SDG39135785	AL 7050-T7452 Rolled Ring Forging	AMS 4108	OD= 110", ID=98", L=6.5"	https://edcc.jsc.nasa.gov/dbase/edrspub/repository/39/SDG39135785_NC_0.PDF	S-basis 52 in ST or Radial dir	35 in ST dir	22.0
3	VC	Upper Support Ring, Vacuum Case Assy	SDG39135784	AL 7050-T7452 Rolled Ring Forging	AMS 4108	OD= 110", ID=98", L=6.5"	https://edcc.jsc.nasa.gov/dbase/edrspub/repository/39/SDG39135784_NC_0.PDF	S-basis 52 in ST or Radial dir	35 in ST dir	20.6
4	VC	Interface Plate Assy, Upper, VCA	SDG39135788	AL 7050-T7451	AMS 4050	10.5 x 8.0 x 2.8	https://edcc.jsc.nasa.gov/dbase/edrspub/repository/39/SDG39135788__A_0.PDF	A-basis 59 in ST dir	35 in ST dir	19.7
5	VC	Interface Plate Assy, Lower, VCA	SDG39135789	AL 7050-T7451	AMS 4050	11.0 x 8.0 x 2.8	https://edcc.jsc.nasa.gov/dbase/edrspub/repository/39/SDG39135789__A_0.PDF	A-basis 59 in ST dir	35 in ST dir	13.3
6	USS	Interface Joint Assy, Upper VC, Upper USS-02 Assy	SDG39135727	AL 7050-T7451	BMS 7-323C	21.1 x 15.7 x 6.9	https://edcc.jsc.nasa.gov/dbase/edrspub/repository/39/SDG39135727__C_0.PDF	Min. 56 in ST dir	35 in ST dir	5.6
7	USS	Sill Joint Assy, Upper USS-02 Assy	SDG39135730	AL 7050-T7451	BMS 7-323C	16.5 x 15.5 x 6.5	https://edcc.jsc.nasa.gov/dbase/edrspub/repository/39/SDG39135730__C_0.PDF	Min. 56 in ST dir	35 in ST dir	26.7
8	USS	Bridge Beam Elbow, Lower Trunnion	SDG39135734	AL 7050-T7451	BMS 7-323C	14.2 x 10.0 x 6.0	https://edcc.jsc.nasa.gov/dbase/edrspub/repository/39/SDG39135734__C_0.PDF	Min. 56 in ST dir	35 in ST dir	5.9
9	USS	Interface Joint Assy, Lower VC, Lower USS-02 Assy	SDG39135737	AL 7050-T7451	BMS 7-323C	18.4 x 17.9 x 7.6	https://edcc.jsc.nasa.gov/dbase/edrspub/repository/39/SDG39135737__A_0.PDF	Min. 55 in ST dir	35 in ST dir	7.9
10	USS	Bracket, Sill, Upper USS-02 Assy	SDG39135738	AL 7050-T7451	BMS 7-323C	9.0 x 5.8 x 5.8	https://edcc.jsc.nasa.gov/dbase/edrspub/repository/39/SDG39135738__B_0.PDF	Min. 56 in ST dir	35 in ST dir	31.0
11	USS	Diagonal Bracket, Sill, Upper USS-02 Assy	SDG39135740	AL 7050-T7451	BMS 7-323C	23.1 x 10.0 x 5.8	https://edcc.jsc.nasa.gov/dbase/edrspub/repository/39/SDG39135740__B_0.PDF	Min. 56 in ST dir	35 in ST dir	25.0
12	USS	Centerbody Box Joint Keel Interface Assy, Lower USS-02 Assy	SDG39135759	AL 7050-T7451	BMS 7-323C	14.9 x 14.9 x 6.0	https://edcc.jsc.nasa.gov/dbase/edrspub/repository/39/SDG39135759__D_0.PDF	Min. 56 in ST dir	35 in ST dir	8.8
13	USS	Centerbody Box Joint Assy, Lower USS-02 Assy	SDG39135760	AL 7050-T7451	BMS 7-323C	14.9 x 14.9 x 6.0	https://edcc.jsc.nasa.gov/dbase/edrspub/repository/39/SDG39135760__B_0.PDF	Min. 56 in ST dir	35 in ST dir	8.8
14	USS	Joint Assy, Lower USS to Upper USS, Lower USS-02 Assy	SDG39135762	AL 7050-T7451	BMS 7-323C	11.9 x 7.5 x 7.2	https://edcc.jsc.nasa.gov/dbase/edrspub/repository/39/SDG39135762__A_0.PDF	Min. 55 in ST dir	35 in ST dir	10.9
15	USS	RICH Mounting Bracket, Lower USS-02 Assy	SDG39135763	AL 7050-T7451	BMS 7-323C	6.4 x 4.1 x 4.0	https://edcc.jsc.nasa.gov/dbase/edrspub/repository/39/SDG39135763_NC_0.PDF	Min. 57 in ST dir	35 in ST dir	21.4
16	USS	PAS RICH Bracket Assy, Lower USS-02 Assy	SDG39135766	AL 7050-T7451	BMS 7-323C	7.5 x 6.9 x 5.3	https://edcc.jsc.nasa.gov/dbase/edrspub/repository/39/SDG39135766__B_0.PDF	Min. 57 in ST dir	35 in ST dir	27.5
17	USS	Lower Angle Beam Flange, Lower USS-02 Assy	SDG39135767	AL 7050-T7451	BMS 7-323C	7.5 x 7.4 x 6.4	https://edcc.jsc.nasa.gov/dbase/edrspub/repository/39/SDG39135767__A_0.PDF	Min. 56 in ST dir	35 in ST dir	18.4
18	USS	Keel Angle Joint, Keel Assy	SDG39135769	AL 7050-T7451	BMS 7-323C	11.6 x 8.8 x 5.8	https://edcc.jsc.nasa.gov/dbase/edrspub/repository/39/SDG39135769__B_0.PDF	Min. 56 in ST dir	35 in ST dir	1.8
19	USS	Keel Block Assy, Keel Assy	SDG39135770	AL 7050-T7451	BMS 7-323C	20.7 x 7.0 x 5.0	https://edcc.jsc.nasa.gov/dbase/edrspub/repository/39/SDG39135770__A_0.PDF	Min. 57 in ST dir	35 in ST dir	0.6
20	PAS	PAS Platform Assy, PAS Base Assy	SDG39135817	AL 7050-T7451	BMS 7-323C	44.8 x 45.4 x 2.8	https://edcc.jsc.nasa.gov/dbase/edrspub/repository/39/SDG39135817__A_0.PDF	Min. 58 in ST dir	35 in ST dir	21.3
21	PAS	Bridge Assy, PAS Bridge Assy	SDG39135837	AL 7050-T7451	BMS 7-323C	37.6 x 3.6 x 2.1	https://edcc.jsc.nasa.gov/dbase/edrspub/repository/39/SDG39135837__B_0.PDF	Min. 59 in ST dir	35 in ST dir	28.2
22	PAS	PAS Vertex Bracket	SDG39135813	AL 7050-T7451	BMS 7-323C	16.5 x 10.7 x 7.9	https://edcc.jsc.nasa.gov/dbase/edrspub/repository/39/SDG39135813_NC_0.PDF	Min. 55 in ST dir	35 in ST dir	23.0
23	PAS	PAS Aft Bracket	SDG39135814	AL 7050-T7451	BMS 7-323C	14.6 x 12.0 x7.5	https://edcc.jsc.nasa.gov/dbase/edrspub/repository/39/SDG39135814_NC_0.PDF	Min. 55 in ST dir	35 in ST dir	26.8
24	PAS	PAS Guide Pins	SDG39135818	AL 7050-T7451	BMS 7-323C	14.0 x 3.8 x 3.0	https://edcc.jsc.nasa.gov/dbase/edrspub/repository/39/SDG39135818_NC_0.PDF	Min. 58 in ST dir	35 in ST dir	1.7

Attachment 1 (Cont.)

Table I: List of 7050-T7451/T7452 Parts Provided by JSC for AMS-02 Payload

25	ROEU	Clevis, ROEU Assembly	SDG39137676	AL 7050-T7451	BMS 7-323C	12.0 x 8.6 x 4.6	https://edcc.jsc.nasa.gov/dbase/edrspub/repository/39/SDG39137676_A_0.PDF	Min. 57 in ST dir	35 in ST dir	4.4
26	ROEU	PDA Mounting Bracket, ROEU Assembly	SEG39137678	AL 7050-T7451	BMS 7-323C	25.8 x 7.8 x 4.6	https://edcc.jsc.nasa.gov/dbase/edrspub/repository/39/SDG39137678_A_0.PDF	Min. 57 in ST dir	35 in ST dir	negligible
27	ROEU	PDA Harness Bracket, ROEU Assembly	SEG39135865	AL 7050-T7451	BMS 7-323C	8.8 x 7.5 x 3.0	https://edcc.jsc.nasa.gov/dbase/edrspub/repository/39/SDG39135865_NC_0.PDF	Min. 58 in ST dir	35 in ST dir	5.5
28	USS	FRGF Bracket	SDG39135861	AL 7050-T7451	BMS 7-323C	12.0 x 10.7 x 5.5	https://edcc.jsc.nasa.gov/dbase/edrspub/repository/39/SDG39135861_A_0.PDF	Min. 57 in ST dir	35 in ST dir	17.2
29	USS	Scuff Plate	SDG39135867	AL 7050-T7451	BMS 7-323C	26.0 x 18.8 x 3.8	https://edcc.jsc.nasa.gov/dbase/edrspub/repository/39/SDG39135867_A_0.PDF	Min. 57 in ST dir	35 in ST dir	21.4

NOTES:

* - The tensile yield stress values were obtained from Table 3.7.4.0 (b) in MMPDS-03 for 7050-T7451plates and Table 3.7.4.0 (d) in MMPDS-03 for 7050-T7452 rolled ring forging.

** - The SCC threshold stress values were obtained from Table 3.1.2.3.1(b) in MMPDS-03 for 7050-T7451 plates per AMS4050 and Table 3.1.2.3.1 (e) in MPDS-03 for 7050-T7452 rolled ring forging per AMS 4108.

ST- Short Transverse, dir- direction

(1) Boeing material specification BMS 7-323C, High Strength Fatigue Tolerant, Stress Corrosion Resistant 7050 Aluminum Alloy Plate, meets the technical requirements of AMS4050.

(2) The manufacturing processes used for these parts were not susceptible to generating residual stresses.

(3) These parts have all been checked by quality personnel to ensure that the part meets the tolerances on the drawings, thus, minimizing stress due to misalignments during assembly. During assembly, the procedures ensure that the parts are not forced to fit and fasteners are not over-torqued.

ISS MATERIALS USAGE AGREEMENT	USAGE AGREEMENT NO.	REV.	PAGE 1 OF 2
	AG 594		

TITLE:	CATEGORY:	EFFECTIVITY:
Al 5083-H111 and 5083-H321Parts Used in Helium Tank of Alpha Magnetic Spectrometer- 02 (AMS-02)	2	STS-134

TYPE OF DEVIATION:	REQUIREMENT DEVIATED:
☒ MATERIAL ☒ EQUIPMENT (NO. PER VEHICLE: 1)	☐ FLAMMABILITY ☐ TVS ☒ SCC ☐ OFFGASSING ☐ O_2 COMPATIBILITY ☒ OTHER Corrosion

EQUIPMENT	PART NUMBER	MANUFACTURER
Helium Tank	See Table I of Attachment 1	Space Cryomagnetics

MATERIAL	TRADE NAME	SPECIFICATION	MANUFACTURER
See Table I of Attachment 1			

THICK (in.)	WEIGHT (lbs.)	AREA (in^2)	LOCATION	ENVIRONMENT		
				TEMPERATURE (°F)	PRESS (PSIA)	MEDIA
			☐ HABITABLE ☒ NONHABITABLE	-58 F to +140 F	Space Vacuum	Vacuum

APPLICATION (use second sheet if required)

The AMS-02 is an ISS experiment payload, which will be attached to ISS S3 Zenith Inboard Payload Attachment System (PAS). It uses a large cryogenic superconducting magnet and several high energy particle detector systems to collect cosmic ray data. Its major subsystems include the Unique Support Structure (USS)-02, Vacuum Case (VC), Synchrotron Radiation Dector (SRD), Transition Radiation Detector (TRD), Anti-Coincidence Counter (ACC), Time of Flight (TOF) Detector, Silicon Tracker, Cryogenic Superconducting Magnet, Ring Imaging Cherenkov Counter (RICH), and Electromagnetic Calorimeter (ECAL). The superconducting magnet and helium tank are enclosed in the vacuum sealed VC as shown in Figure 1, Attachment 1. The magnet coils are cooled by conduction to the helium tank, which is a fully welded toroidal Al 5083 pressure vessel.

(Continued on next page)

RATIONALE (use second sheet if required)

Stress-Corrosion Cracking (SCC) is a failure phenomenon that occurs in SCC sensitive materials when they are subjected to sustained tensile stress in the presence of a corrosive environment. SCC failure will not occur if the SCC sensitive materials are not exposed to a corrosive environment. After fabrication, the welded Al 5083 helium tank is not exposed to a corrosive environment because it is installed in the VC, which is either under vacuum of 1.0 x 10E(-6) torr or pressurized to 15.4 psi with dry nitrogen or argon gas. The liquid helium in the helium tank is kept at 1.8 degrees Kevin. No moisture is present in the liquid helium at 1.8 degrees Kevin. The liquid helium is an inert enviroment for bare Al 5083-H111 and Al 5083-H321. No corrosion and SCC problem is expected for these Al 5083-H111 and Al 5083-H321 parts because the helium tank is not exposed to a corrosive environment after its fabrication through its flight use. The use of bare Al 5083-H111 and Al 5083-H321 parts in the helium tank is acceptable for corrosion and SCC.

APPROVALS

ORIGINATOR/ORGANIZATION	DATE	JSC MATERIALS AND PROCESSES TECHNOLOGY BRANCH	DATE
Chia-Chang 10/30/09	10/30/09	Julie A. Henkener	11-3-09
PROJECT MANAGER	**DATE**	**PROGRAM MANAGER**	**DATE**
	30 Oct 2009		

JSC Form 1466 (Rev June 93) NASA-JSC

ISS MATERIALS USAGE AGREEMENT	USAGE AGREEMENT NO.	REV.	PAGE 2 OF 2
	AG594		

TITLE:	CATEGORY:	EFFECTIVITY:
Al 5083-H111 and 5083-H321Parts Used in Helium Tank of Alpha Magnetic Spectrometer- 02 (AMS-02)	2	STS-134

APPLICATION (Cont.)

The main structural components of the helium tank are made of Al 5083-H111 and Al 5083-H321. Al 5083-H111 is Table I material and Al 5083-H321 is Table II material for Stress Corrosion Cracking (SCC) per MSFC-STD-3029, Guidelines for the Selection of Metallic Materials for Stress Corrosion Resistance in Sodium Chloride Environments. A list of Al 5083-H111 and Al 5083-H321 parts used in the helium tank is shown is Table I, Attachment 1. These Al 5083-H111 and Al 5083-H321 parts have no corrosion protective surface finish. This MUA provides the acceptance rationale for the use of these bare Al 5083-H111 and Al 5083-H321 parts in the helium tank.

JSC Form 1466 (Rev June 93) NASA-JSC

ATTACHMENT 1

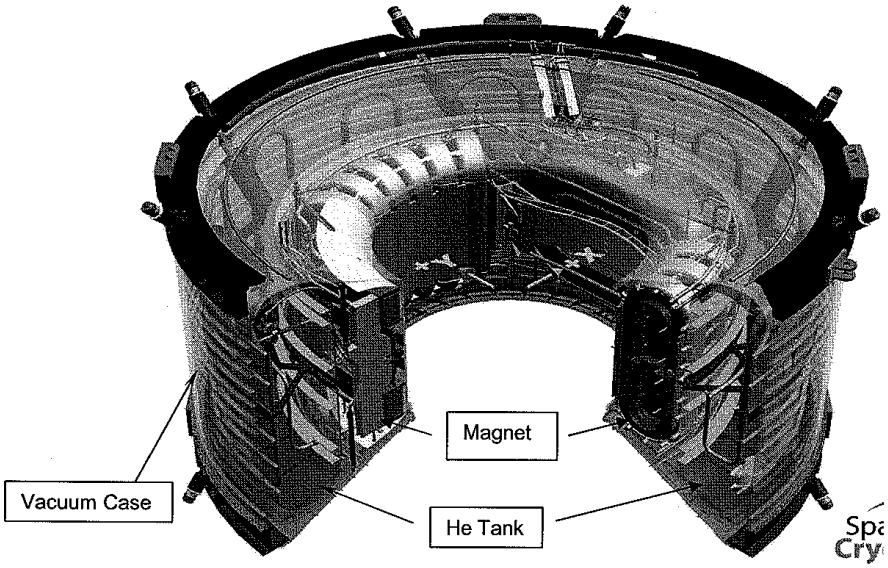

Figure 1: Helium Tank and Magnet Shown in Cut-away View of Vacuum Case

ATTACHMENT 1 (Cont.)

Table I: List of Al 5083-H111 and Al 5083-H321 Parts Used in Helium Tank

Item No.	Subsystem	Part Name	Part Number	Material	Corrosion Protective Finish	Dimensions, inches (LxWxH)
1	Helium Tank	Inner Central Ring	SCD0905-01	AL 5083-H111	None	OD= 1976 mm, ID=1922 mm, H=74 mm
2	Helium Tank	Outer Central Ring	SCD0905-01	AL 5083-H111	None	OD= 2580 mm, ID=2520 mm, H=66 mm
3	Helium Tank	Thro Tube	SCD0902-01	AL 5083-H321	None	OD= 113 mm, ID=102 mm, H=438 mm
4	Helium Tank	Thro Tube	SCD0903-01	AL 5083-H321	None	OD= 113 mm, ID=102 mm, H=420 mm
5	Helium Tank	Top Inner Ring	SCD0905-04	AL 5083-H321	None	OD= 2058 mm, ID=1922 mm, H=395 mm
6	Helium Tank	Bottom Inner Ring	SCD0905-05	AL 5083-H321	None	OD= 2058 mm, ID=1922 mm, H=435 mm
7	Helium Tank	Top Outer Ring	SCD0905-02	AL 5083-H321	None	OD= 2580 mm, ID=2436 mm, H=399 mm
8	Helium Tank	Buttom Outer Ring	SCD0905-03	AL 5083-H321	None	OD= 2580 mm, ID=2436 mm, H=439 mm
9	Helium Tank	Bottom End Dish	SCD0905-06	AL 5083-H321	None	OD= 2580 mm, ID=1922 mm, H=140 mm
10	Helium Tank	Top End Dish	SCD0905-07	AL 5083-H321	None	OD= 2580 mm, ID=1922 mm, H=140 mm
11	Helium Tank	Porous Plug	SCD0905-21	AL 5083-H321	None	126 mm x 131mm x 93 mm
12	Helium Tank	Burst Disc	SCD0905-10	AL 5083-H321	None	OD= 112 mm, ID=80 mm, L=43.6 mm
13	Helium Tank	Central Plate (Spoke)	SCD0905-01	AL 5083-H321	None	644 mm L, 20 mm x 20 mm I-beam, 3mm web thickness, 2 mm flange thickness
14	Helium Tank	Instrument Cable Support Bar	SCD0905-05	AL 5083-H321	None	244 mm x 25 mm x 3 mm

JSC MATERIALS AND FRACTURE CONTROL CERTIFICATION

PROJECT/SUBSYSTEM MANAGER: **T. Martin/EA321**	REF: MATL – **09** – **036** **p.1 of 4**
HARDWARE NAME: **Alpha Magnetic Spectrometer (AMS-02) Data Interface Hardware**	PART NUMBER: **See Attachment 2**

APPLICABLE REQUIREMENTS:

Materials Requirements:

- ☒ NSTS 1700.7B, Safety Policy and Requirements for Payloads Using the Space Transportation System
- ☒ SE-R-0006D, Space Shuttle System Requirements for Materials and Processes
- ☒ SSP 30233G, Space Station Requirements for Materials and Processes
- ☒ JSC 27301E, Materials Control Plan for JSC Flight Hardware
- ☒ JSC 49774A, Standard Manned Spacecraft Requirements for Materials and Processes
- ☐ Other:

Fracture Control Requirements:

- ☐ NASA-STD-5003, Fracture Control Requirements for Payloads Using the Space Shuttle
- ☐ SSP 30558C, Fracture Control Requirements for Space Station
- ☐ SSP 52005B, ISS Payload Flight Equipment Requirements and Guidelines for Safety-Critical Structures

SPECIFIC ASSESSMENTS:

- ☒ Flammability
- ☒ Toxicity
- ☒ Stress Corrosion Cracking
- ☒ General Corrosion
- ☐ Fracture Control (☒ Not Applicable; Concurrence: **M.S.**)
- ☒ Age Life ☐ Other:
- ☐ Atomic Oxygen/Ultraviolet
- ☐ Thermal Vacuum Stability
- ☐ Fluid Compatibility:
- ☒ Microbiological Resistance

LOCATION:

- ☒ Orbiter Crew Cabin
- ☐ Orbiter Payload Bay
- ☒ Progress
- ☒ Spacehab
- ☒ MPLM
- ☒ Soyuz
- ☒ ATV
- ☒ HTV
- ☒ Space Station: ☒ Internal ☐ External
- ☐ Other:

MATERIALS USAGE AGREEMENTS (MUAs):

- ☒ No MUAs
- ☐ MUA Number(s):

Deviation:

LIMITATIONS: ☒ No Limitations

- ☐ Materials:
- ☐ Fracture Control:

This JSC Materials and Fracture Control Certification is consistent with existing Materials or Fracture Control Reciprocal Agreements.

APPROVALS

M.D. Pedley	3/25/09	M.D. Pedley	3/25/09
Fracture Control Manager, S. Forth	Date	GFE Materials Control Manager, M. Pedley	Date

June 2005A

ATTACHMENT 1

Hardware Acceptance Summary Report for Materials

The following data interface hardware will be used in the crew compartment during various stages of data transmission from the AMS-02 payload in the Shuttle Cargo Bay to the T0 umbilical and theNext Generation Laptop System (NGLS):

1. AMS-02 RS422 T-0/PDIP Cable Assembly (SED39136112-302)
2. DDRS-02 Assembly (SED39136116-301)
3. USB 422 Assembly (SED39137921-301)
4. AMS-02 USB-422/PDIP Cable Assembly (SED39136111-301)
5. USB A/B Cable Assembly (SED39136130-801)

The AMS-02 RS422 T-0/PDIP cable will be used to patch RS422 signal from the payload to the Shuttle T0 umbilical for GSE monitoring and control prior to launch. The cable is connected between the Payload Data Interface Panel (PDIP) connectors J103 and J105. The cable is made of flight approved materials including nonflammable HR Plus Expando sleeving, Teflon-coated lacing cord, Scotch Weld 2216, P213 glass cloth tape, FEP Type C tape, Velcro fastener straps, Vibratite Formula 3, Teflon-insulated data bus cable, Twinax plug connector, and NLS plug connector. The use of Vibratite Formula 3 on non-structural, non-critical fasteners on soft-stowed hardware is acceptable.

The DDRS-02 Assembly will be used to patch RS422 signal from the payload to the NGLS A31P hard drive for data storage during on-orbit operations. It consists of one USB 422 unit connected to the USB A/B cable at one end and the USB-422/PDIP cable at the other end.

The USB 422 Assembly provides in-line conversion of RS422 synchronous serial signals to a USB 2.0 interface. The USB 422 unit consists of a single PCB housed in an anodized 6063-T6 enclosure with Twinax and USB type B connectors. The unit draws less than 0.5 amps and is powered by the NGLS USB 5.0 VDC source. The materials used in the USB 422 unit include RTV 3145 adhesive, RTV 3140 conformal coating, Kynar shrink tubing, Velcro fasteners, and Loctite 21463. The use of Loctite 21463 on non-critical fasteners of soft-stowed hardware is acceptable.

The USB-422/PDIP Cable Assembly is connected between the PDIP connector J105 and the USB 422 Assembly. The cable is made of flight approved materials including Teflon-insulated cable (M27500-22RE2S06), HR plus Expando sleeve, FEP Type C tape, P213 glass cloth tape, Vibratite Formula 3, and NLS plug connectors. The use of Vibratite Formula 3 on non-critical fasteners of soft-stowed hardware is acceptable.

The USB A/B Cable Assembly is connected between the USB 422 Assembly and NGLS. The cable is made of flight approved materials including the USB 2.0 cable wrapped with FEP Type C tape, P213 glass cloth tape, and Velcro fastener straps. No thread locking compound or adhesive is used in the USB A/B cable Assembly.

The AMS-02 data interface hardware will be soft stowed in crew cabin for launch and landing.

Stress Corrosion Cracking:
All metallic materials were evaluated for SCC and found acceptable.

General Corrosion:
All metallic materials were evaluated for corrosion and found acceptable.

Flammability:
All non-metallic materials are "A" rated for flammability or used in non-flammable configuration by analysis.

Toxicity:
All non-metallic materials are "A' rated or better for toxicity, or used in quantities below their maximum allowable limits for Shuttle and ISS per MAPTIS>

June 2005A

Aging:
The AMS-02 data interface hardware was evaluated for aging and found acceptable. It is replaceable as needed.

Microbiological Resistance:
The AMS-02 data interface hardware was evaluated for microbiological resistance and found acceptable based on its accessibility for cleaning.

Conclusion:
There are no limitations on the use of the AMS-02 data interface hardware in Orbiter and ISS habitable areas.

MPE - C. Chang

ATTACHMENT 2

Attachment to MATL – **09-036**

AMS-02 RS422 T-0/PDIP Cable Assembly	SED39136112-302
DDRS-02 Assembly	SED39136116-301
USB422 Assembly	SED39137921-301
AMS-02 USB-422/PDIP Cable Assembly	SED39136111-301
USB A/B Cable Assembly	SED39136130-801

ISS MATERIALS USAGE AGREEMENT	USAGE AGREEMENT NO. PI 217	REV.	PAGE 1 OF 1

TITLE:	CATEGORY:	EFFECTIVITY:
Utilization of Aluminum Alloy 7175 T 7351	2	AMS02 FLIGHT

TYPE OF DEVIATION: SCC	REQUIREMENT DEVIATED:		
☒ MATERIAL ☐ EQUIPMENT (NO. PER VEHICLE: 1)	☐ FLAMMABILITY	☐ TVS	☒ SCC
	☐ OFFGASSING	☐ O_2 COMPATIBILITY	☐ OTHER

EQUIPMENT	PART NUMBER	MANUFACTURER
N/A		

MATERIAL	TRADE NAME	SPECIFICATION	MANUFACTURER
See Annex A		see Annex A / B / C	

THICK (in.)	WEIGHT (lbs.)	AREA (in²)	LOCATION	ENVIRONMENT		
				TEMPERATURE (°F)	PRESS (PSIA)	MEDIA
N/A	N/A	N/A	☐ HABITABLE ☒ NONHABITABLE	-220 to +212	Space Vacuum	Vacuum

APPLICATION (use second sheet if required)

The Aluminium Alloy 7175 T7351 will be utilized for the manufacturing of the CGS parts related to the production of the AMS02 TCS (Thermal Control System) FM subsystems and of the AMS02-PDS (Power Distribution System) FM box as equivalent option to Al 7075 T7351 in order to minimize procurement time of raw material in case of unavailability of Al 7075 T7351 from European suppliers.

RATIONALE (use second sheet if required)

MAPTIS reports data concerning the Stress Corrosion Cracking only for Al 7175 T73511 extrusions (" A " rated) and no SCC data concerning Al 7175 T7351 rolled sheet/ plate .

As shown in Annex A Al 7175 T7351 has been graded class 1 (High Resistance to stress-corrosion) with respect to ECSS-Q-70-37A par .7.3 (see Annex B).
Moreover the chemical compositions of Al 7075 and Al 7175 are very similar and considering this aspect the specification AMS QQ-A-250/12 (applicable to Al 7075) is also referenced for the Al 7175 as shown by the certificate of the material delivered by the manufacturer in the frame of another project (Annex C)

For these reasons CGS asks for the authorisation of its use.

C.C. 11/20/07

APPROVALS

ORIGINATOR/ORGANIZATION	DATE	JSC MATERIALS AND PROCESSES TECHNOLOGY BRANCH	DATE
L. Cremonesi CARLO GAVAZZI SPACE	16.11.2007		11-27-07
PROJECT MANAGER	**DATE**	**PROGRAM MANAGER**	**DATE**
Chris Tutt ESCG	27 Nov 2007		

JSC Form 1468 (Rev June 93) NASA-JSC

CARLO GAVAZZI SPACE SpA	01 **AMS02**	02 N°: AMS02-RA-CGS-001
	Request For Approval of PMP **(Part, Materials and Process)**	RFA ref Issue 1 Date 13.11.2007
		Page **1** of **1** attach.

03 System and Subsystem	04 Applicant
AMS02	**CARLO GAVAZZI SPACE SpA**

05 Full Designation of Request PMP	06 Quantity per Model
Utilization of Aluminium alloy 7175 T7351 See ISS Materials Usage Agreement in the next page	N/A

07 Desired Characteristics

N/A

08 Essential Deviation from Similar Approved PMP

N/A

09 Application Details / Function

N/A

10 Available Reliability Data	11 Known failure Modes
N/A	N/A

12 Qualification Status	13 Classification:
N/A	Class No.: N/A per Spec. No.: N/A

14 Experience with the Requested PMP

N/A

15 Proposed Manufacturers	16 History of Production Line
N/A	N/A

17 Procurement Specification and/or Standard	18 Process Specification / Handling Specification
N/A	N/A

19 Test Procedures	20 Alternative PMP
N/A	N/A

Mod. N° RFA-10/01

Annex C 3/3

ALCOA

Alcoa Europe Flat Rolled Products

A Division of Alcoa MANUFACTURING (GB) Limited
PO Box 383, Kitts Green Road, Kitts Green, Birmingham B33 9QR England
Telephone: +44 (0)121 252 8000 Facsimile: +(0)121 252 8001
Email: sales.KIT@alcoa.com

Material Safety Data Sheets available at www.alcoa.com

This single document represents the combined **Certificate of Conformity and Inspection Certificate**
Certificate conforms to EN 10204 type 3.1
Approval numbers:- RM12976(BSI) - For BS EN ISO 9001:2000 AUKISA00162 BAe/AG/50192/AERO BAe/AG/10644/AERO others available on request

DELIVER TO DESTINATAIRE - EMPFANGER	INVOICE	SERIAL NUMBER
ALIMEX GMBH KARL-ARNOLD-STRASSE 14-16 D-47877 WILLICH DEUTSCHLAND (AEROSPACE)	ALIMEX METALLGESELLSCHAFT MBH DAIMLERSTR. 21-23 D-47877 WILLICH DEUTSCHLAND (AEROSPACE)	0390049 CUST. ACCT. No. 2AX645W002

OUR ORDER No. No. de commande - Auftrag Nr	CUSTOMER'S ORDER No. Commande client - Kundenbestellung	ITEM	INSPECTION	DATE	SHEET
00084311/0016	WL15500911		MCERT EXPORT	19/10/05	3 / 3

Further information :

Percent Stretch : 1.9 % 2.0 %
Conductivity : 23.0 23.9 MS/m
Ultrasonic inspec Cl.A & exceeds Cl.B for AMS(MIL)-STD-2154, PS21211J, DPS4.713, NDTS5101A, CSTI006, BSS7055, QSS16100Q for plate>=1inch only, AMS2630B, FPS0018D, ASTMB594-02.TYPE I.
FSR=<3mm.K.Green procedures:WI-TQ-871iss8 & 872iss7
Conductivity : 23.600 MS/m
CONDUCTIVITY TEST
END: A DIRN : LT THICK POSN: C WIDTH POSN: .3W
RESULT :0023.80 MS/m
CONDUCTIVITY TEST
END: A DIRN : LT THICK POSN: Q WIDTH POSN: .3W
RESULT :0023.90 MS/m
STRESS CORROSION FACTOR SATISFACTORY

THIS IS TO CERTIFY THAT THE WHOLE OF THE SUPPLIES DETAILED HEREON HAVE BEEN INSPECTED, TESTED AND UNLESS OTHERWISE STATED ABOVE, CONFORM IN ALL RESPECTS TO SPECIFICATION(S) AND ORDER REQUIREMENTS

* CERTIFIED THAT THE WHOLE OF THE SUPPLIES DETAILED HEREON HAVE BEEN MANUFACTURED, INSPECTED, TESTED AND UNLESS OTHERWISE STATED ABOVE, CONFORM IN ALL RESPECTS TO SPECIFICATIONS, DRAWINGS AND CONTRACTORS REVISED DATED AND USE ARRANGEMENTS XXXXXXXXXXXX

*Delete if not applicable

SIGNED FOR AND ON BEHALF OF ALCOA MANUFACTURING (G.B.) LIMITED, TRADING AS:-
ALCOA EUROPE FLAT ROLLED PRODUCTS

Refer to our Conditions Of Sale as per the original Order Acknowledgment for product liability statements

J B V 348

Identification on material

Annex A 1/14

ESA/ESTEC, Noordwijk, The Netherlands

STRESS-CORROSION CRACKING TESTING OF ALUMINIUM ALLOY 7175-T7351

E. Semerad, T. Gross, H. Lichtl

METALLURGY REPORT No. 3318

April 2002

Distribution:

- ESTEC Library (1 copy)
- TOS-QM (4 copies)
- ARC (2 copies)
- MSM-GUL – J. Jimenez (3 copies)

Approved by:

G. Bussu

Material Mechanics and Processes

Annex A 2/14

Table of Contents

1 OBJECTIVE 1
2 SAMPLES : 1
3 TEST MATRIX 3
4 TEST PROCEDURE 3
5 RESULTS 4
5.1 Mechanical properties - 7175-T7351 in short transverse direction 4
5.2 Metallography - 7175-T7351 in short transverse direction 5
5.3 SCC resistance - 7175-T7351 in short transverse direction 5

Annex A 3/14

SCC testing of Aluminium alloy 7175-T7351

1 OBJECTIVE

The present program covers SCC testing of the alloy 7175-T7351 at 75% of the material 0.2% proof stress in short transverse (ST) direction. The test procedure was according to the space standard ECSS-Q-70-37, however the specimen geometry deviates due to the limitations of the available plate thickness of 100 mm.

2 SAMPLES :

Ready machined specimens of alloy 7175-T7351 in short transverse direction were delivered for SCC testing by Astruim Space (Toulouse). Astrium ordered the material in form of 100mm thick plates, machining of the specimens was arranged in Astrium. 16 specimens were delivered.

Turned specimens with 8 mm diam. within the gage section were used. The specimen geometry which was agreed with ESTEC is shown below. This geometry was chosen due to the limitations of the material (100mm thick plates). The diameters of the gage section and threaded ends correspond to ECSS-Q-70-37, however the length of the gage section and threaded ends is shortened. Considering a low stress concentration the chosen geometry has smooth shoulders with R=16mm however a gage length of 38,75 mm only. For the fixation of the specimens with shortened threaded ends an adaptation of the available jigs had to be made.

Annex 4/14

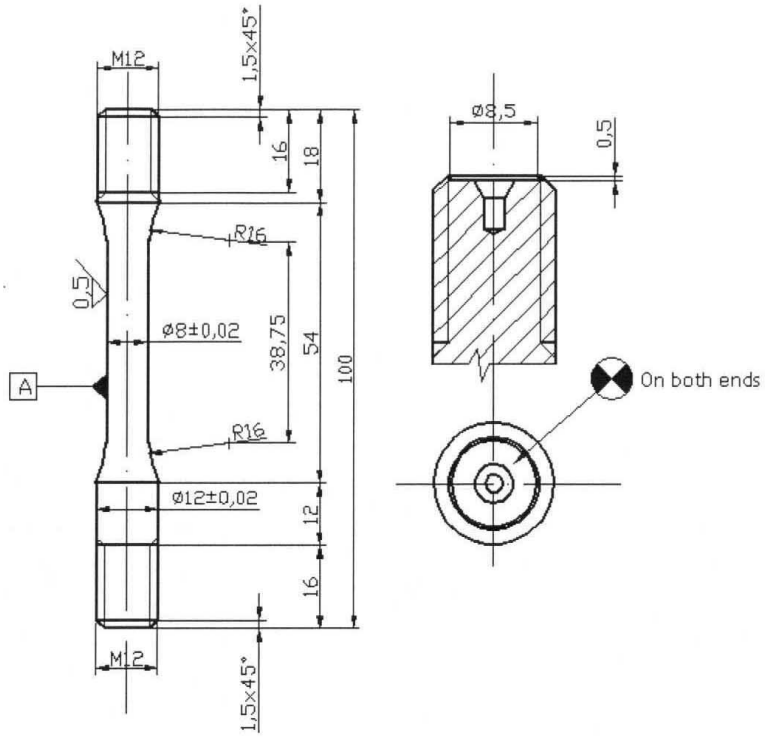

Notes:
1, Remove all sharp edges
2, The specimen should be fully symetric
3, Sample identification by 1 to 9
Letter height is 1,5 and location is marked
4, Dimensions of drawing in mm and not to scale

Overall geometric tolerances	
General dimensions	JS13;js13
Surface roughness	1,6 µm
Cylindricity	⌭ 0,01
Symetry	⌯ 0,1
Concentricity	◎ 0,03 A

Fig. 1, Specimen geometry

Annex A 5/14

3 TEST MATRIX

Stress corrosion test acc. to ECSS-Q-70-37A

Material type	SCC test direction	SCC stress level	Specimens	Specimen notation
7175-T7351	Short transverse direction	75% Rp0.2, i.e. 280 MPa	turned specimens	7175-T7351 #1 to 7175-T7351 #9

Tab.1, Test Matrix of stress corrosion tests acc. to ECSS-Q-70-37A

4 TEST PROCEDURE

Stress corrosion tests

The tests are carried out in accordance to ECSS-Q-70-37A over a period of 30 days at a stress level at 75% of the yield strength Rp0.2 in short transverse direction.

The initial tensile properties of the as received material were evaluated from three parallel specimens.

Three parallel specimens were subjected to a stress level of 75% of Rp0.2 and immersed in 3.5 % NaCl solution. The stress was maintained by connecting the 3 testing rigs to a hydraulic pressure regulator. Three parallel specimens were used as unstressed control specimens. The control and the stressed specimens were immersed in 3.5 % NaCl solution for ten minutes and dried for 50 minutes, which was repeated over a period of 30 days. The sodium chloride solution was renewed after 7, 15 and 21 days. The tests were performed at 23 ± 2°C.

For the metallographic examination sections of approx. 20 mm in length were cut from the centre of the specimens from all stress corrosion and unstressed control specimens. Axial microsections across the full thickness were examined at magnifications up to x500. For evaluation of the grain structure the surface was etched with HF (1ml) : H_2O (50ml). Examination for SCC cracks was made on non-etched specimens.

Tensile tests

The tensile tests were performed with a universal testing machine, type Shimadzu AGC-10/TC with a 100 kN calibrated load cell. The initial strain rate was measured with an extensometer with 25 mm gauge length. The strain rate was 0.5 mm/min up to the fracture.

Annex A 6/14

5 RESULTS

5.1 Mechanical properties - 7175-T7351 in short transverse direction

The mechanical properties of the as received, stress corrosion and unstressed control specimens are summarised in Tab.2. The stress corrosion specimens were loaded at 280 MPa, i.e. 75% of the mean 0.2 proof stress of the as received state. No specimen failed during the 30 days SCC test. In the subsequent tensile test a moderate decrease of the tensile strength from 459 MPa was seen for the unstressed control (440 MPa) and stress corrosion specimens (418 MPa). The material fulfils the 90% criterion of the average tensile strength of the stress corrosion specimens with respect to the unstressed control specimens. A significant decrease of the elongation with respect to the as received state (7,1%) was found for the unstressed control (4,7%) and stress corrosion specimens (2,5%).

Sample	Exposure time in SCC test [d]	Test No.	Young's Modulus [GPa]	F_{max} [N]	R_m [MPa]	$Rp_{0.2}$ [MPa]	Elongation after frac. [%]	d [mm]
Initial mechanical test specimens								
7175-T7351 #1	-	1	71,0	22817	457	373	7,2	7,97
7175-T7351 #2	-	2	71,0	22952	459	373	7,0	7,98
7175-T7351 #3	-	3	70,3	22814	460	373	7,0	7,95
Average			**70,7**	**22861**	**459**	**373**	**7,1**	
Std. Dev.:			0,4	79	1	0	0,1	
Stress corrosion specimens – 75% Rp0.2 test at a stress level of 280 MPa								
7175-T7351 #4	30	5	67,0	20480	412	363	1,8	7,96
7175-T7351 #5	30	7	68,4	21151	425	363	3,2	7,96
7175-T7351 #6	30							
Average			**67,7**	**20816**	**418**	**363**	**2,5**	
Std. Dev.:			1,0	474	10	0	1,0	
Unstressed control specimens – 75% Rp0.2 test								
7175-T7351 #7	30	6	66,9	21962	440	355	4,9	7,97
7175-T7351 #8	30	8	69,4	21908	439	358	4,5	7,97
7175-T7351 #9	30							
Average			**68,1**	**21935**	**440**	**357**	**4,7**	
Std. Dev.:			1,8	38	1	2	0,3	

Table 2, Mechanical properties of 7175-T7351 in short transverse direction

5.2

Annex A 7/14

Metallography - 7175-T7351 in short transverse direction

Cross sections of unstressed control specimens are given in Fig. 2 – 8. Cross sections of stress corrosion specimens are given in Fig. 9 – 14.

The grain structure of 7175-T7351 is shown in Fig.2 on an etched surface. The longitudinal grains perpendicular to ST-direction show a hard inner kernel (dark areas).

Both for the unstressed control specimens as well as for the stress corrosion specimens corrosion pits were observed. They show a preferred corrosion along longitudinal orientation of the grains (Fig. 3, 4, 7, 8, 9, 11 and 13) . The maximum depth of these corrosion pits is in the range of 500µm, both for the stress corrosion and the unstressed control specimens. Tensile cracks of the tensile tested specimens originate from corrosion pits (Fig. 5, 10 and 12). No signs of stress corrosion cracking were found for the stress corrosion specimens..

5.3 SCC resistance - 7175-T7351 in short transverse direction

No specimens failed during the SCC test. Metallographic inspection showed no evidence of stress corrosion cracking on all of the SCC test specimens. The material was graded Class 1 with respect to SCC. The results are summarised in Tab. 3.

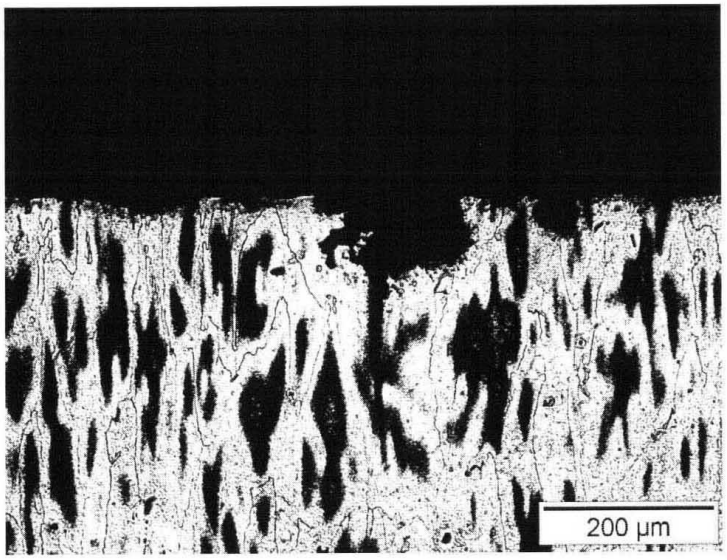

Fig. 2, Stress corrosion specimen (7175-T7351 - #4). Grain structure of 7175-T7351. Longitudinal grains perpendicular to ST-direction show a hard inner kernel (dark areas). Corrosion pit (148µm). Etched surface HF (1ml) : H_2O (50ml).

Annex A 8/14

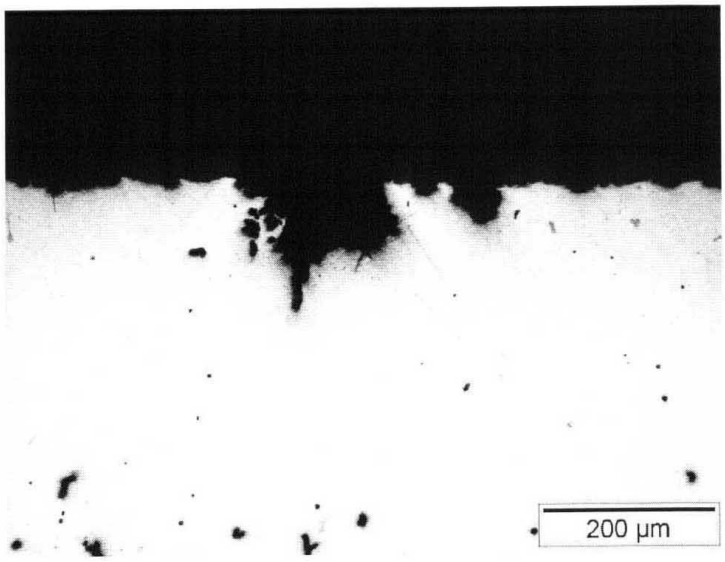

Fig. 3, Stress corrosion specimen (7175-T7351 - #4). Corrosion pit (148µm). Same area as figure 2.

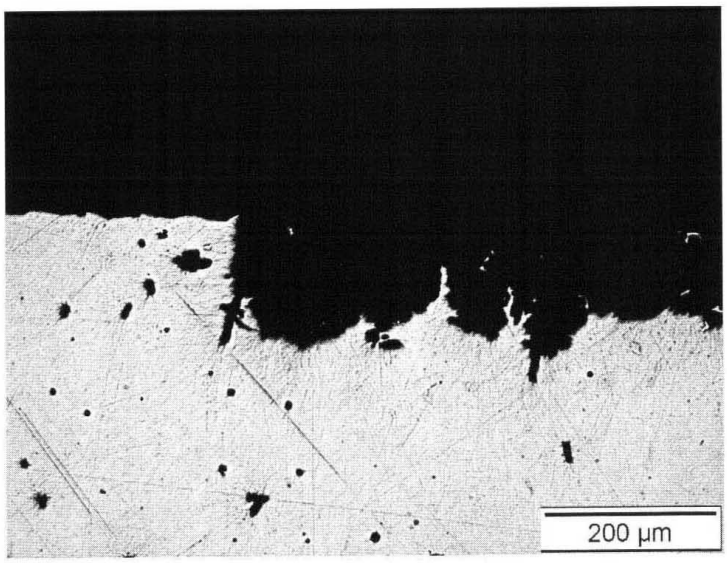

Fig. 4, Stress corrosion specimen (7175-T7351 - #4). Corrosion pits (181µm).

Annex A 8/14

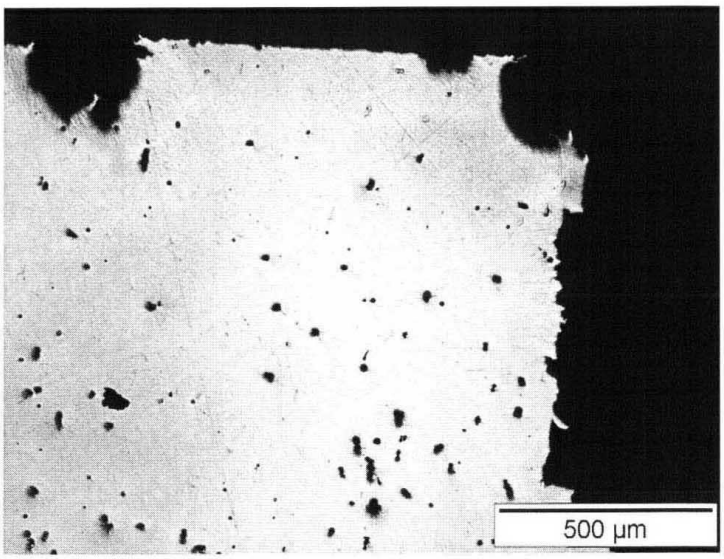

Fig. 5, Stress corrosion specimen (7175-T7351 - #4). Area of tensile crack starting form a corrosion pit 224µm.

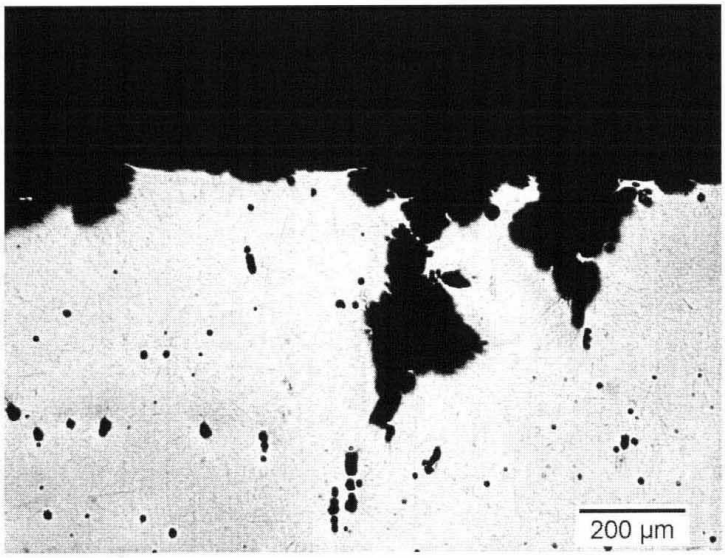

Fig. 6, Stress corrosion specimen (7175-T7351 - #5). Corrosion pits (505µm).

Annex A 10/14

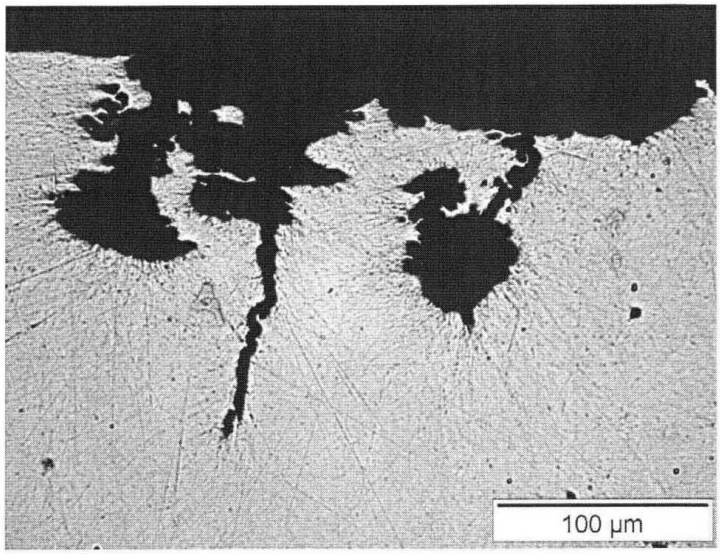

Fig. 7, Stress corrosion specimen (7175-T7351 - #6). Corrosion pits (179µm). Preferred corrosion along longitudinal orientation of grains.

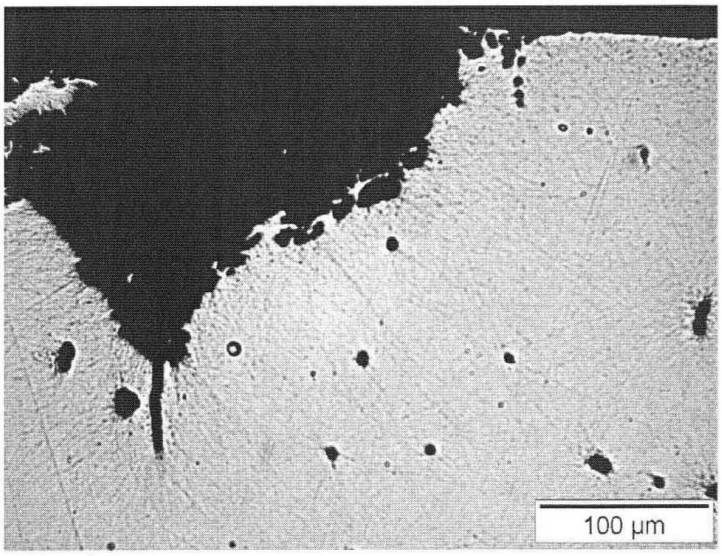

Fig. 8, Stress corrosion specimen (7175-T7351 - #6). Corrosion pit (252µm). Preferred corrosion along longitudinal orientation of grains.

Annex A 11/14

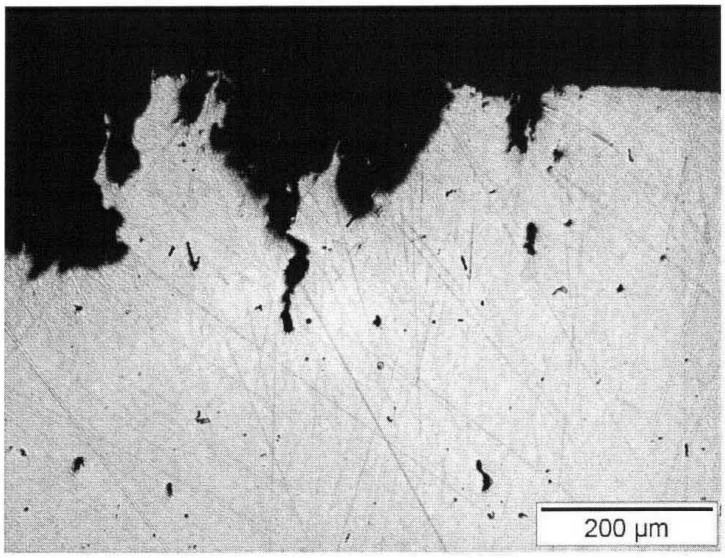

Fig. 9, Unstressed control specimen (7175-T7351 - #7). Corrosion pit (297µm). Preferred corrosion along longitudinal orientation of grains.

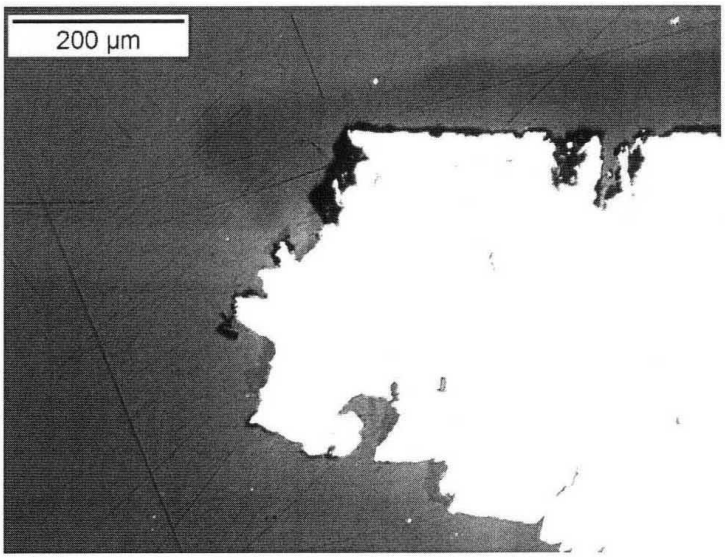

Fig. 10, Unstressed control specimen (7175-T7351 - #7). Area of tensile crack starting form a corrosion pit.

Annex A 12/14

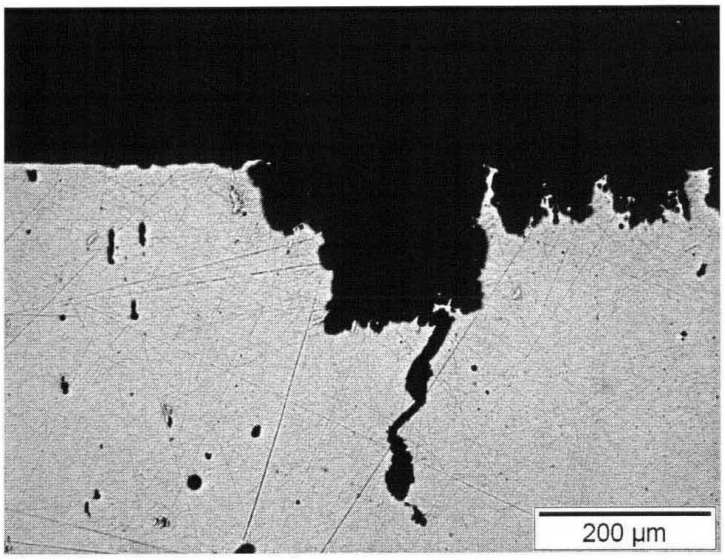

Fig. 11, Unstressed control specimen (7175-T7351 - #8). Corrosion pit (380µm). Preferred corrosion along longitudinal orientation of grains.

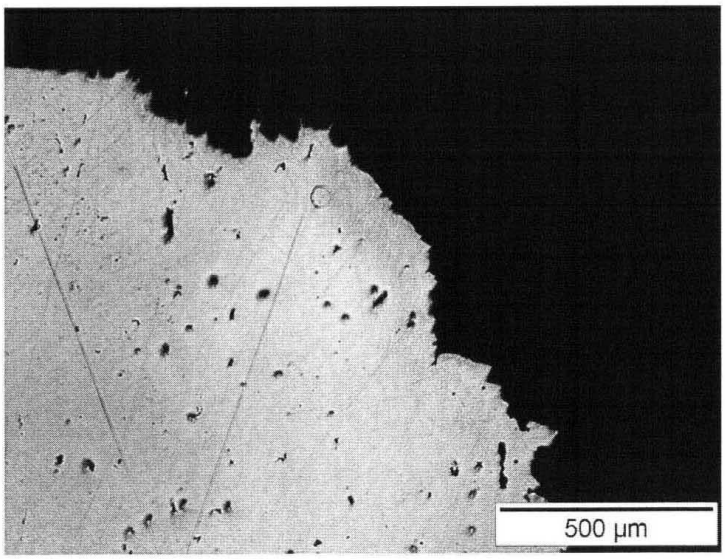

Fig. 12, Unstressed control specimen (7175-T7351 - #8). Area of tensile crack starting form a corrosion pit.

Annex A 13|14

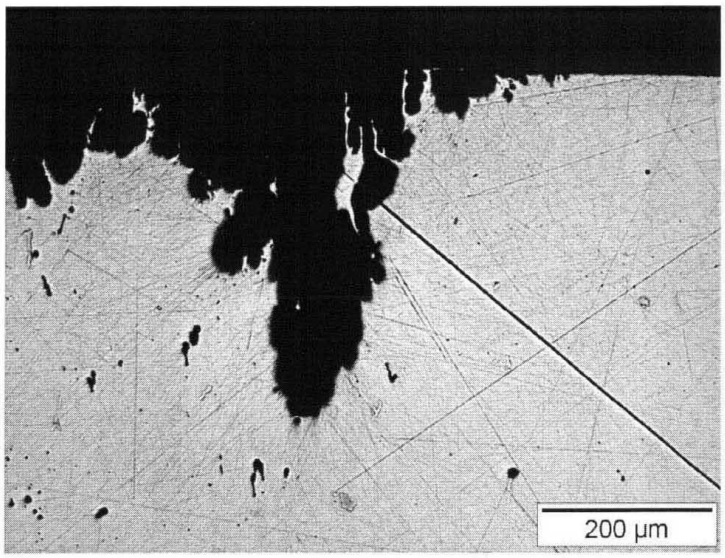

Fig. 13, Unstressed control specimen (7175-T7351 - #9). Corrosion pits (406µm). Preferred corrosion along longitudinal orientation of grains.

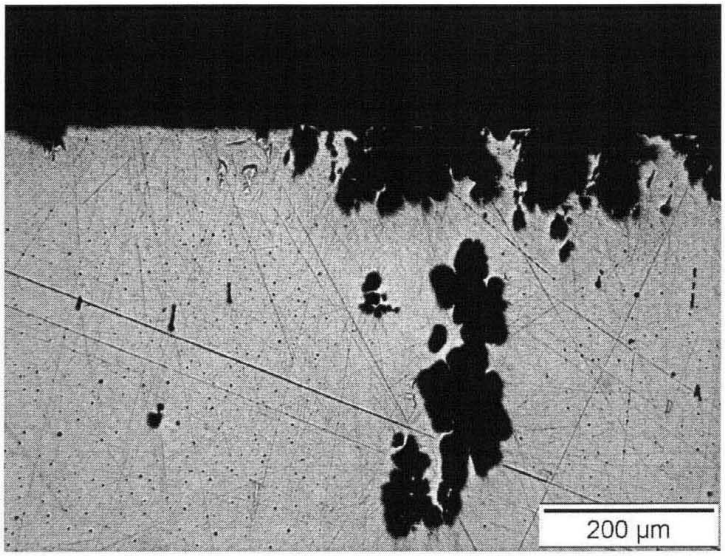

Fig. 14, Unstressed control specimen (7175-T7351 - #9). Corrosion pit (478µm).

Annex A 14/14

Table 3, Summary of SCC Test Results - ARC-Seibersdorf Ref. Call-off Order 42, Contract No 11760/95

Alloy Designation:	**7175-T7351**	SCC test direction:	**short transverse direction**
Supplied by:	ESTEC	Material Type:	Al-alloy
Processed by:	Astruim Space (Toulouse)	Product form: 100mm thick plates	
Conditions:	-		
Composition:	(nominal) Si: 0.15; Fe: 0.2; Cu: 1.2-2.0; Mn: 0.1; Mg: 2.1-2.9; Cr: 0.18-0.28; Zn: 5.1-6.1; Ti: 0.1; others: total 0.15, each 0.05		

Turned specimens were tested in short transverse direction at 75 % of the 0.2% proof stress. Exposure is in accordance to ECSS-Q-70-37A. The specimen geometry was adjusted to the available material (100mm thick plates). The diameters of the gage section and threaded ends correspond to ECSS-Q-70-37, however the length of the gage section and threaded ends is shortened.

No specimen failed during the SCC test. Metallographic inspection showed no evidence of stress corrosion cracking. The material was graded Class 1 with respect to SCC.

Description	$R_{p0.2}$ [MPa]	R_m [MPa]	Elongation [%]	E [GPa]	Time to Failure [d]	Max. Depth of Cracks [µm]
Tensile Test Specimens	373	457	7,2	71,0	-	
	373	459	7,0	71,0	-	
	373	460	7,0	70,3	-	
Average	**373**	**459**	**7,1**	**70,7**		
Stress Corrosion Specimens loaded at 280 MPa, 75% of the mean 0.2 Proof Stress	363	412	1,8	67,0	no failure	0, (286 for pits)
	363	425	3,2	68,4	no failure	0, (505 for pits)
	-	-	-	-	no failure	0, (252 for pits)
Average	**363**	**418**	**2,5**	**67,7**		
Corresponding unstressed Controls	355	440	4,9	66,9	no failure	0, (297 for pits)
	358	439	4,5	69,4	no failure	0, (420 for pits)
	-	-	-	-	no failure	0, (478 for pits)
Average	**357**	**440**	**4,7**	**68,1**		

Annex B 1/1

7.3 Assessment of stress-corrosion susceptibility

The materials tested shall be classified as showing resistance to stress-corrosion; either:

- high;
- moderate; or
- low.

7.3.1 Class 1

Alloys or weldments show *high* resistance to stress-corrosion if:

a. none of the three stress-corrosion specimens fails in the thirty-day test. Any failure is disregarded if the tensile strength of the unstressed control specimen removed from test at the time of failure of the stress-corrosion specimen does not exceed the stress-corrosion test stress; and

b. the average tensile strength of two of the three stress-corrosion specimens after the thirty-day test is not less than 90 % of that of the unstressed control specimens; and

c. none of the three stress-corrosion specimens shows evidence of stress-corrosion on metallographic examination at X50 magnification.

7.3.2 Class 2

Alloys or weldments show *moderate* resistance to stress-corrosion if:

a. none of the three stress-corrosion specimens fails in the thirty-day test. Any failure is disregarded if the tensile strength of the unstressed control specimen removed from test at the time of failure of the stress-corrosion specimen does not exceed the stress-corrosion test stress; and

b. the average tensile strength of the two stress-corrosion specimens after the thirty-day test is not less than 90 % of that of the unstressed control specimens; and

c. metallographic examination at X50 magnification shows evidence of stress-corrosion in any of the three stress-corrosion specimens.

7.3.3 Class 3

Alloys or weldments show *low* resistance to stress-corrosion if:

a. any of the three stress-corrosion specimens fails in the thirty-day test at a test stress below the tensile strength of the unstressed control specimen removed from test when the stress-corrosion specimen fails; and

b. the average tensile strength of the stress-corrosion specimens after the thirty-day test is less than 90 % of that of the unstressed control specimens; and

c. metallographic examination at X50 magnification shows evidence of stress-corrosion.

Amex C 1/3

Alcoa Europe Flat Rolled Products
A Division of Alcoa MANUFACTURING (GB) Limited
PO Box 383, Kitts Green Road, Kitts Green, Birmingham B33 9QR England
Telephone: +44 (0)121 252 8000 Facsimile: +(0)121 252 8001
Email: sales.KIT@alcoa.com

ALCOA

Material Safety Data Sheets available at www.alcoa.com

This single document represents the combined **Certificate of Conformity and Inspection Certificate**
Certificate conforms to EN 10204 type 3.1
Approval numbers:- FM12976(BSI) - For BS EN ISO 9001:2000 AUK/SA/30152 BAe/AG/30192/AERO BAe/AG/10644/AERO others available on request

DELIVER TO (DESTINATARE - EMPFANGER)	INVOICE	SERIAL NUMBER
ALIMEX GMBH KARL-ARNOLD-STRASSE 14-16 D-47877 WILLICH DEUTSCHLAND (AEROSPACE)	ALIMEX METALLGESELLSCHAFT MBH DAIMLERSTR. 21-23 D-47877 WILLICH DEUTSCHLAND (AEROSPACE)	0390049 CUST. ACCT. No. 2AX645W002

OUR ORDER No. (No. de commande - Auftrag Nr)	CUSTOMER'S ORDER No. (Commande client - Kundenbestellung)	ITEM	INSPECTION	DATE	SHEET
0008431170016	WL155000911		MCERT EXPORT	19/10/05	1 / 3

ALUMINIUM ALLOY PLATE

DIMENSIONS:	QUANTITY	THICK	WIDTH	LENGTH	NET WEIGHT
	8 PLATES	16.000 mm	1250.00 mm	2500.00 mm	1130.00 Kgs

8 PLATES NO 3976701 1 TO 4.3976702 1 TO 4.
International alloy code EN AW-7175
Specifications : DAN422 3.4364 T7351
AMS-QQ-A-250/12 T7351
WL3.4364>12T7351
ABS5064 CODE A ISSUE 1
ULTRASONIC SCAN TO AMS(MIL)-STD-2154, BSS 7055, PS21211
CLASS A /WI-EN-807 CAT 1+2
BSS 7055 replaces BAC 5439-3 which is now obsolete
Plate ultrasonically tested to BSS 7055 also meets
the requirements of BAC 5439.
T7351 SOL. TREATED, CONTROL STRETCHED, PRECIPITATED
COMPLIES WITH VFN13327.
MEETS CHEMICAL COMPOSITION OF 7075
PLEASE OIL VERY VERY LIGHTLY
TOLERANCES TO DAN26 & LN9073.

Plate No	No. Plates	Case No.
3976701	4	15857
3976702	4	15857

Lot Number : 41-412-3976

Analysis :

Cast Number	Cu	Fe	Mg	Mn	Si	Zn
1Q287205	1.63	.18	2.35	.01	.07	5.83

Ti	Cr	Li	Totl Othrs	Remainder
.039	.20	.0000	.00	Al

THIS IS TO CERTIFY THAT THE WHOLE OF THE SUPPLIES DETAILED HEREON HAVE BEEN INSPECTED, TESTED AND UNLESS OTHERWISE STATED ABOVE, CONFORM IN ALL RESPECTS TO SPECIFICATION(S) AND ORDER REQUIREMENTS

* CERTIFIED THAT THE WHOLE OF THE SUPPLIES DETAILED HEREON HAVE BEEN MANUFACTURED, INSPECTED, TESTED AND UNLESS OTHERWISE STATED ABOVE, CONFORM IN ALL RESPECTS TO SPECIFICATION(S), DRAWING(S) AND CONTRACT/ORDER, SAVE FOR DEVIATIONS ACCEPTED BY THE CUSTOMER AS STATED XXXXXXXXXXXXXX

*Delete if not applicable

SIGNED FOR AND ON BEHALF OF ALCOA MANUFACTURING (G.B.) LIMITED, TRADING AS:-
ALCOA EUROPE FLAT ROLLED PRODUCTS

Refer to our Conditions Of Sale as per the original Order Acknowledgment for product liability statements

J B V 348

Identification on material

Annex C 2/3

ALCOA

Material Safety Data Sheets available at www.alcoa.com

Alcoa Europe Flat Rolled Products
A Division of Alcoa MANUFACTURING (GB) Limited
PO Box 383, Kitts Green Road, Kitts Green, Birmingham B33 9QR England
Telephone: +44 (0)121 252 8000 Facsimile: +(0)121 252 8001
Email: sales.KIT@alcoa.com

This single document represents the combined **Certificate of Conformity and Inspection Certificate**
Certificate conforms to EN 10204 type 3.1
Approval numbers:- FM12978(BSI) - For BS EN ISO 9001:2000 AUK/SA/00152 BAe/AG/30192/AERO BAe/AG/10644/AERO others available on request

DELIVER TO DESTINATAIRE - EMPFANGER	INVOICE	SERIAL NUMBER
ALIMEX GMBH KARL-ARNOLD-STRASSE 14-16 D-47877 WILLICH DEUTSCHLAND (AEROSPACE)	ALIMEX METALLGESELLSCHAFT MBH DAIMLERSTR. 21-23 D-47877 WILLICH DEUTSCHLAND (AEROSPACE)	0390049 CUST. ACCT. No. 2AX645W002

OUR ORDER No. No. de commande - Auftrag Nr	CUSTOMER'S ORDER No. Commande client - Kundenbestellung	ITEM	INSPECTION	DATE	SHEET
00084311/0016	WL155000911		MCERT EXPORT	9/10/05	2 / 3

Tensile Properties :

Plate No	Cast number	Test Direction and Pos'n	Gauge Length (D)	0.2% Proof Stress (MPa)	Ultimate Stress (MPa)	Elong-ation (%)
3976701	1G287205	L BC.3W	5.00	443	512	12.1
3976701	1G287205	L AC.3W	5.00	442	514	12.0
3976701	1G287205	LTBC.3W	5.00	447	515	11.0
3976701	1G287205	LTAC.3W	5.00	448	517	12.8
3976701	1G287205	L AC.5W	5.00	444	515	12.2
3976701	1G287205	LTAC.5W	5.00	444	512	11.7
3976702	1G287205	LTAC.3W	5.00	453	517	10.8
3976702	1G287205	LTAC.5W	5.00	446	514	11.3
3976702	1G287205	L AC.5W	5.00	445	514	11.9
3976702	1G287205	L BC.3W	5.00	446	515	12.4
3976702	1G287205	LTBC.3W	5.00	446	517	11.9
3976702	1G287205	L AC.3W	5.00	451	518	11.2

Further information :

Plate No.: 3976701
Percent Stretch : 2.0 % 2.1 %
Conductivity : 23.3 23.8 MS/m
Ultrasonic inspec Cl.A & exceeds Cl.B for AMS(MIL)-STD-2154, PS21211J, DPS4.713, NDTS5101A, CSTI006, BSS7055, GSS16100Q for plate>=1inch only, AMS2630B, FPS0018D, ASTMB594-02.TYPE I.
FSR=<3mm.K.Green procedures:WI-TQ-871iss8 & 872iss7
Conductivity : 23.600 MS/m
CONDUCTIVITY TEST
END: A DIRN : LT THICK POSN: C WIDTH POSN: .3W
RESULT :0023.90 MS/m
CONDUCTIVITY TEST
END: A DIRN : LT THICK POSN: Q WIDTH POSN: .3W
RESULT :0024.00 MS/m
STRESS CORROSION FACTOR SATISFACTORY

Plate No.: 3976702

THIS IS TO CERTIFY THAT THE WHOLE OF THE SUPPLIES DETAILED HEREON HAVE BEEN INSPECTED, TESTED AND UNLESS OTHERWISE STATED ABOVE, CONFORM IN ALL RESPECTS TO SPECIFICATION(S) AND ORDER REQUIREMENTS

* CERTIFIED THAT THE WHOLE OF THE SUPPLIES DETAILED HEREON HAVE BEEN MANUFACTURED, INSPECTED, TESTED AND UNLESS OTHERWISE STATED ABOVE, CONFORM IN ALL RESPECTS TO THE SPECIFICATIONS, DRAWINGS AND CONTRACT ORDER RELATING THERETO AND THE REQUIREMENTS OF X X X X X X X X X X X X

J B V 348

Identification on material

*Delete if not applicable

SIGNED FOR AND ON BEHALF OF ALCOA MANUFACTURING (G.B.) LIMITED, TRADING AS:-
ALCOA EUROPE FLAT ROLLED PRODUCTS

Refer to our Conditions Of Sale as per the original Order Acknowledgment for product liability statements

Annex C 3/3

Alcoa Europe Flat Rolled Products
A Division of Alcoa MANUFACTURING (GB) Limited
PO Box 383, Kitts Green Road, Kitts Green, Birmingham B33 9QR England
Telephone: +44 (0)121 252 8000 Facsimile: +(0)121 252 8001
Email: sales.KIT@alcoa.com

ALCOA

Material Safety Data Sheets available at www.alcoa.com

This single document represents the combined **Certificate of Conformity and Inspection Certificate**
Certificate conforms to EN 10204 type 3.1
Approval numbers:- RM12976(BSI) - For BS EN ISO 9001:2000 AUKISA00162 BAe/AG/50192/AERO BAe/AG/10644/AERO others available on request

DELIVER TO DESTINATAIRE - EMPFANGER	INVOICE	SERIAL NUMBER
ALIMEX GMBH KARL-ARNOLD-STRASSE 14-16 D-47877 WILLICH DEUTSCHLAND (AEROSPACE)	ALIMEX METALLGESELLSCHAFT MBH DAIMLERSTR. 21-23 D-47877 WILLICH DEUTSCHLAND (AEROSPACE)	0390049 CUST. ACCT. No. 2AX645W002

OUR ORDER No. No. de commande - Auftrag Nr	CUSTOMER'S ORDER No. Commande client - Kundenbestellung	ITEM	INSPECTION	DATE	SHEET
00084311/0016	WL15500911		MCERT EXPORT	19/10/05	3 / 3

Further information :

Percent Stretch : 1.9 % 2.0 %
Conductivity : 23.0 23.9 MS/m
Ultrasonic inspec Cl.A & exceeds Cl.B for AMS(MIL)-STD-2154, PS21211J, DPS4.713, NDTS5101A, CSTI006, BSS7055, QSS16100Q for plate>=1inch only, AMS2630B, FPS0018D, ASTMB594-02.TYPE I.
FSR=<3mm.K.Green procedures:WI-TQ-871iss8 & 872iss7
Conductivity : 23.600 MS/m
CONDUCTIVITY TEST
END: A DIRN : LT THICK POSN: C WIDTH POSN: .3W
RESULT :0023.80 MS/m
CONDUCTIVITY TEST
END: A DIRN : LT THICK POSN: Q WIDTH POSN: .3W
RESULT :0023.90 MS/m
STRESS CORROSION FACTOR SATISFACTORY

THIS IS TO CERTIFY THAT THE WHOLE OF THE SUPPLIES DETAILED HEREON HAVE BEEN INSPECTED, TESTED AND UNLESS OTHERWISE STATED ABOVE, CONFORM IN ALL RESPECTS TO SPECIFICATION(S) AND ORDER REQUIREMENTS

* CERTIFIED THAT THE WHOLE OF THE SUPPLIES DETAILED HEREON HAVE BEEN MANUFACTURED, INSPECTED, TESTED AND UNLESS OTHERWISE STATED ABOVE, CONFORM IN ALL RESPECTS TO SPECIFICATIONS, DRAWINGS AND CONTRACTORS RELATED DEFINED AND USE ARRANGEMENTS XXXXXXXXXXXX

J B V 348

Identification on material

*Delete if not applicable

SIGNED FOR AND ON BEHALF OF ALCOA MANUFACTURING (G.B.) LIMITED, TRADING AS:-
ALCOA EUROPE FLAT ROLLED PRODUCTS

Refer to our Conditions Of Sale as per the original Order Acknowledgment for product liability statements

ISS MATERIALS USAGE AGREEMENT	USAGE AGREEMENT NO.	REV.	PAGE 1 OF 2
	ESCG/ISS-256		

TITLE:	CATEGORY:	EFFECTIVITY:
Electromagnetic Calorimeter (ECAL), Alpha Magnetic Spectrometer 02 (AMS-02)	2	STS-134

TYPE OF DEVIATION:	REQUIREMENT DEVIATED:
☒ MATERIAL ☒ EQUIPMENT (NO. PER VEHICLE: 1)	☐ FLAMMABILITY ☐ TVS ☒ SCC ☐ OFFGASSING ☐ O_2 COMPATIBILITY ☒ OTHER Material Pedigree

EQUIPMENT	PART NUMBER	MANUFACTURER
	See Table I of Attachment 3	IHEP, Beijing

MATERIAL	TRADE NAME	SPECIFICATION	MANUFACTURER
See Table I of Attachment 3			

THICK (in.)	WEIGHT (lbs.)	AREA (in^2)	LOCATION	ENVIRONMENT		
				TEMPERATURE (°F)	PRESS (PSIA)	MEDIA
			☐ HABITABLE ☒ NONHABITABLE	-58 F to +140 F	Space Vacuum	Vacuum

APPLICATION (use second sheet if required)

The AMS-02 is an ISS experiment payload, which will be attached to ISS S3 Zenith Inboard Payload Attachment System (PAS). It uses a Nd-Fe-B permanent magnet and several high energy particle detector systems to collect cosmic ray data. Its major subsystems include the Unique Support Structure (USS) with Vacuum Case (VC), Transition Radiation Detector (TRD), Anti-Coincidence Counter (ACC), Time of Flight (TOF) Detector, Silicon Tracker, Cryogenic Superconducting Magnet, Ring Imaging Cherenkov Counter (RICH), and Electromagnetic Calorimeter (ECAL). The AMS-02 payload configuration for launch and landing is shown in Figure 1, Attachment 1. The ECAL located at the bottom of the experiment stack is mounted to lower USS-02 via four 7050-T7451 Al alloy Support Beams and brackets (see Figure 1, Attachment 2).

(Continued on next page)

RATIONALE (use second sheet if required)

Sustained stresses in all identified parts are well below the SCC threshold stress and yield levels of the parent material. The individual pieces were machined out of plate stock and were not reheated during machining. Significant amounts of material were removed from the Side Panels and I-Frame without inducing warpage outside of drawing tolerances, which gives confidence that residual stresses in the parent material were low. The I-Frame, Side Panel, and Face Plate are secondary structure which are connected by a highly redundant bolted interface. The support brackets are primary structure for this detector, but each are mounted to the main AMS-02 support structure by a pair of bolts in slotted holes. Each bracket in turn bears on Teflon-coated shim plates (see Figure 3, Attachment 2). This gives the ECAL the ability to deform as necessary along the main bracket axis to limit the buildup of assembly stresses.

(Continued on next page)

APPROVALS

ORIGINATOR/ORGANIZATION	DATE	JSC MATERIALS AND PROCESSES TECHNOLOGY BRANCH	DATE
Chin Chang	5/25/10		5/25/10
PROJECT MANAGER	DATE	PROGRAM MANAGER	DATE
	27 May 2010		

JSC Form 1466 (Rev June 93) NASA-JSC

ISS MATERIALS USAGE AGREEMENT	USAGE AGREEMENT NO. ESCG/ISS-256	REV.	PAGE 2 OF 2

TITLE:	CATEGORY:	EFFECTIVITY:
Electromagnetic Calorimeter (ECAL), Alpha Magnetic Spectrometer 02 (AMS-02)	2	STS-134

APPLICATION (Cont.): The ECAL measures the energy and coordinates of electrons, positrons, and gamma rays. The support beams and brackets made of 7050-T7451 Al alloy are attached to the 2014-T6 Al alloy I-beam/2024-T4 face plate and 2014-T6 side panels at four conners of ECAL (see Figure 2, Attachment 2). The 7050-T7451 (or its equivalent 7050-T73651designation) Al alloy is a Table II material with moderate resistance to stress corrosion cracking (SCC) per MSFC-STD-3029, Guidelines for the Selection of Metallic Materials for Stress Corrosion Resistance in Sodium Chloride Environments. The 2014-T6 Al alloy and 2024-T4 Al alloy are Table III materials with low resistance to SCC per MSFC-STD-3029. This MUA provides the acceptance rationale for the use of the 7050-T7451 support beams/brackets, 2014-T6 I-beam/side panels, and 2024-T4 face plate in the ECAL.

In addition to the SCC issue, there is only informal documentation of the material pedigree and properties used for structural/strength analysis of the 2014 and 2024 parts. This is due to a lack of formal documentation from the hardware provider, IHEP, Beijing, China.

The 2014 and 2024 alloys, along with alloy 7050, are the only aluminum alloys used in the ECAL structure. The 2014 and 2024 alloys are the only ones with a pedigree concern. All other materials, including the 7050, are per specification and the pedigrees are known. The 7050 material used in the ECAL structure was provided to IHEP by American partners on the AMS project (Lockheed Martin and NASA).

RATIONALE (Cont.):
The SCC acceptance rationale is documented in Attachment 3, Table II. The system is not pressurized, nor does it have any magnetic parts that would be loaded when the magnet is charged. Loads induced by the gravity environment are provided in Table I, Attachment 3.

The robustness in the design (low launch loads, high structural margins) provides enough confidence that the structures are safe and the the informal documentation of the material pedigrees is acceptable. Details on the structural robustness or the 2014 and 2024 parts are provided below. The 2014 parts are not subject to impact loading so good toughness (which might be compromised by the unknown pedigree) is not required.

Part: I-Frame
Alloy: 2014-T6
Max Stress in service: 18 ksi
Calculated Structural Margin: 1.36
>>The reported strength in the IHEP documentation is 65 ksi. For a zero margin the strength would have to be 25.2 ksi, which is 38% of the reported strength.

Part: Side Panels 1 & 2
Alloy: 2014-T6
Max Stress in service: 20 ksi
Calculated Structural Margin: 1.59
>> The reported strength in the IHEP documentation is 65 ksi. For a zero margin the material strength would have to be 28.0 ksi, which is 43% of the reported strength.

Part: Face Plates
Alloy: 2024-T4
Max Stress in service: 15 ksi
Calculated Structural Margin: 2.04
>> The reported strength in the IHEP documentation is 61 ksi. For a zero margin the material strength would have to be 21.0 ksi, which is 34% of the reported strength.

Attachment 1

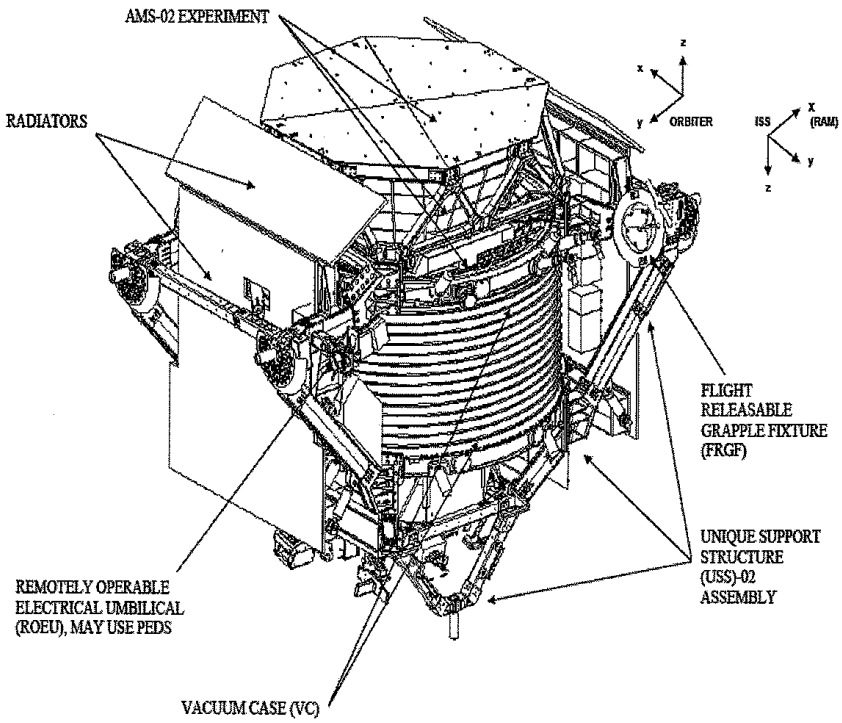

Figure 1 : AMS-02 Payload Configuration- Launch, Landing, and On-Orbit

Attachment 2

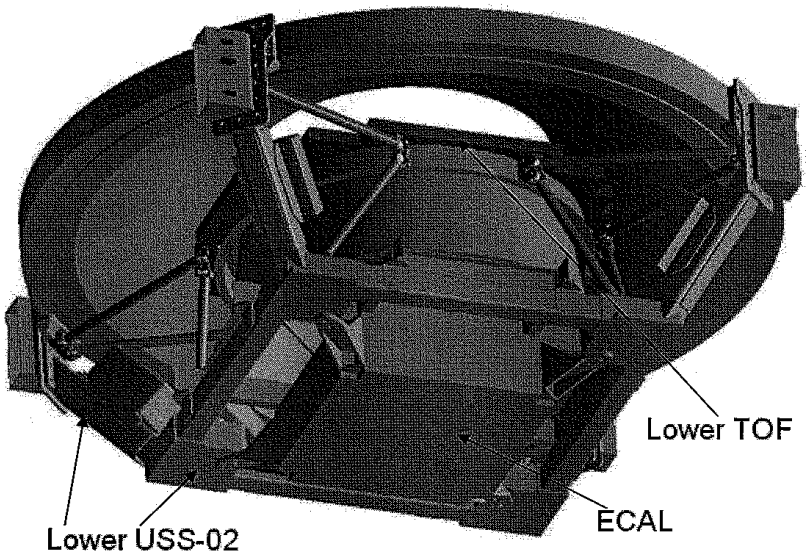

Figure 1: Fight configuration of ECAL showing attachment to Lower USS-02 at four locations via the 7050-T7451 Al alloy Support Beams and Brackets

Attachment 2 (Cont.)

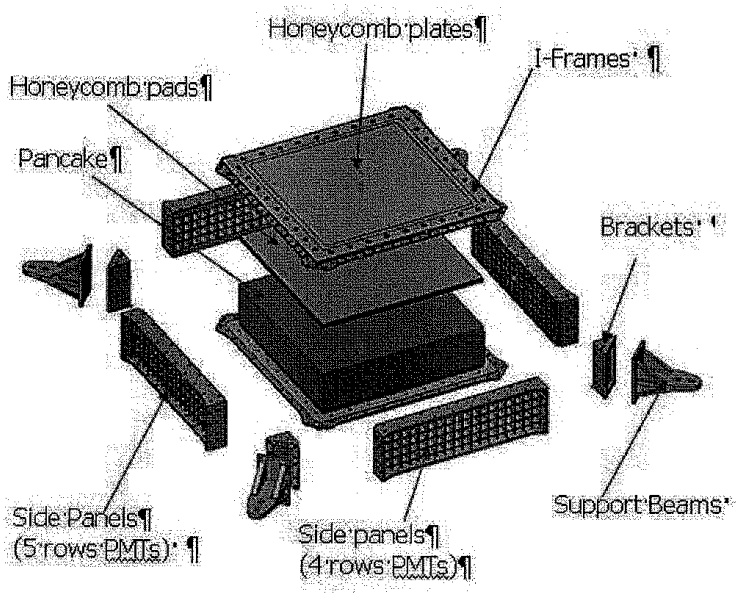

Figure 2: Explored View of Electromagnetic Calorimeter (ECAL)

Attachment 2 (Cont.)

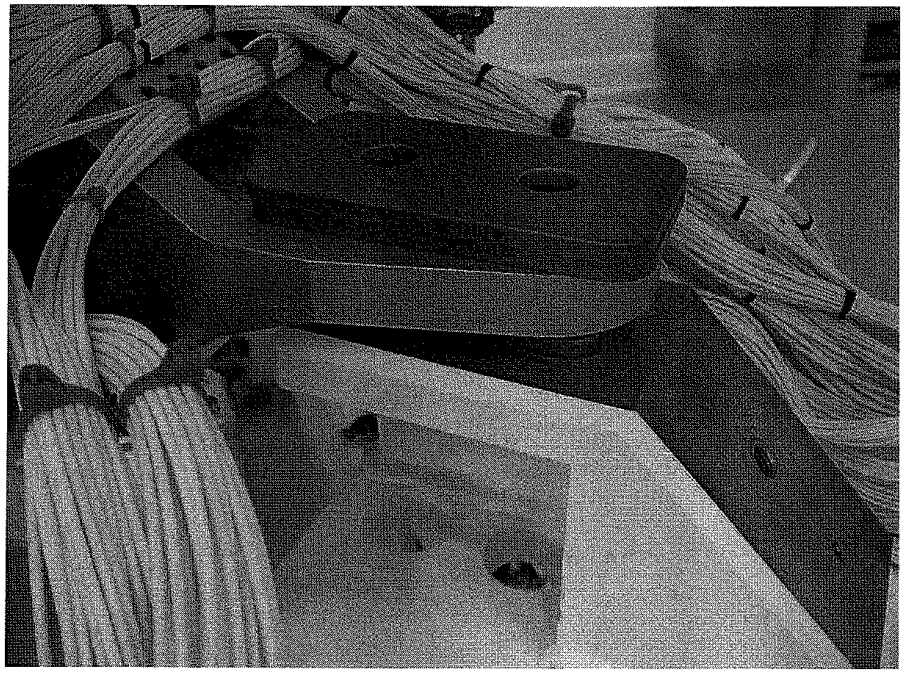

Figure 3: ECAL Support and Shim Plates Prior to Installation

Attachment 3

Table I: Listing of Non-Table I SCC Materials in ECAL Structural Components

Subsystem	Part Name	Part Number	Material	Sustained Tensile Stress
ECAL	Support	ECAL-0-42-E	Al 7050-T7451	Max Prin: 1.9 ksi Von Mises: 1.8 ksi
ECAL	Bracket	ECAL-0-41-E	Al 7050-T7451	Max Prin: 0.6 ksi Von Mises: 0.7 ksi
ECAL	I-Frame	ECAL-0-11-E	Al 2014-T6	Max Prin: 0.6 ksi Von Mises: 0.5 ksi
ECAL	Side Panel	ECAL-0-20-E ECAL-0-30-E	Al 2014-T6	Max Prin: 1.2 ksi Von Mises: 1.1 ksi
ECAL	Face Plate	ECAL-0-51-E ECAL-0-52-E	Al 2024-T4	Max Prin: 0.5 ksi Von Mises: 0.5 ksi

Note: Maximum Principal stress is the worst-case stress in any direction due to gravity loads.

Attachment 3 (Cont.)

Table II: SCC Evaluation for ECAL Structural Components per MSFC-STD-3029

1	
Part Number	ECAL 0-41-E
Part Name	Bracket
Next Assembly Number	ECAL 0-40-E
Manufacturer's Name, Address, Phone Number	IHEP, Beijing
Material	AL 7050
Heat Treatment	T7451
Size and Form	Plate, 0.8" x 7.9" x 4.7"
Sustained Tensile Stresses-	
a. Process Residual Contribution	T7451 temper is mechanically stress relieved.
b. Assembly Contribution	Negligible, no press fit, no over- torque fasteners
c. Design (Static) Contribution	0.6 ksi
Special Processing (to reduce tensile stresses)	
Weldments	N/A
Environment	fab - controlled / shipping & storage - container, dessicant, etc / testing - controlled / pre-launch - controlled / use – space vacuum
Protective Finish	Exposed surfaces anodized per MIL-A-8625 Type II
Function of Part	Structural support for the ECAL
Effect of Failure	Release of ECAL if all four brackets failed
Evaluation of Stress Corrosion Cracking Susceptibility	The risk of SCC failure is minimal because the part's sustained tensile stress is low and is used in space vacuum.
Remarks	The part drawing does not have materials specification, corrosion protection finish, and heat-treatment temper information. However the raw material was provided to IHEP by JSC and the specification and pedigree are known to be Boeing specification BMS 7-323C.

2	
Part Number	ECAL 0-42-E
Part Name	Support
Next Assembly Number	ECAL 0-40-E
Manufacturer's Name, Address, Phone Number	IHEP, Beijing
Material	AL 7050
Heat Treatment	T7451
Size and Form	Plate, 9.4" x 7.9" x 4.7"
Sustained Tensile Stresses-	
a. Process Residual Contribution	Negligible, T7451 temper is mechanically stress relieved. No re-heat treatment is used during and after machining.
b. Assembly Contribution	Negligible, no press fit, no over- torque fasteners
c. Design (Static) Contribution	1.9 ksi
Special Processing (to reduce tensile stresses)	
Weldments	N/A
Environment	fab - controlled / shipping & storage - container, dessicant, etc / testing - controlled / pre-launch - controlled / use – space vacuum
Protective Finish	Exposed surfaces anodized per MIL-A-8625 Type II
Function of Part	Structural support for the ECAL
Effect of Failure	Release of ECAL if all four supports failed
Evaluation of Stress Corrosion Cracking Susceptibility	The risk of SCC failure is minimal because the part's sustained tensile stress is low and is used in space vacuum.
Remarks	The part drawing does not have materials specification, corrosion protection finish, and heat-treatment temper information. However the raw material was provided to IHEP by JSC and the specification and pedigree are known to be Boeing specification BMS 7-323C.

3	
Part Number	ECAL 0-11-E
Part Name	I-Frame
Next Assembly Number	ECAL 0-10-E
Manufacturer's Name, Address, Phone Number	IHEP, Beijing
Material	AL 2014
Heat Treatment	T6
Size and Form	Plate, 31" x 3" x 0.9"
Sustained Tensile Stresses-	

a. Process Residual Contribution	-T7451 temper is mechanically stress relieved.
b. Assembly Contribution	Negligible, no press fit, no over-torque fasteners
c. Design (Static) Contribution	Max Principal: 0.2728 ksi, Von Mises: 0.2322 ksi
Special Processing (to reduce tensile stresses)	
Weldments	N/A
Environment	fab - controlled / shipping & storage - container, dessicant, etc / testing - controlled / pre-launch - controlled/ use - space
Protective Finish	Anodized per MIL-A-8625, Type II
Function of Part	It attaches the mixing tank to Box S plate.
Effect of Failure	Mixing tank will not be securely attached to the Box plate.
Evaluation of Stress Corrosion Cracking Susceptibility	The risk of SCC failure is minimal because the part's sustained tensile stress is low and the part is used in space vacuum.
Remarks	The raw material was provided to INFN by JSC. The material specification for the raw material is Boeing specification BMS 7-323C.

4

Part Number	TRD_GAS_SYS_BOX_S_0013
Part Name	Mixing Tank Fixed Bracket
Next Assembly Number	
Manufacturer's Name, Address, Phone Number	INFN
Material	AL 7050
Heat Treatment	T7451
Size and Form	Plate, 2.7" x 2.5" x 0.4"
Sustained Tensile Stresses-	
a. Process Residual Contribution	-T7451 temper is mechanically stress relieved.
b. Assembly Contribution	Negligible, no press fit, no over-torque fasteners
c. Design (Static) Contribution	Max Principal: 0.2728 ksi, Von Mises: 0.2322 ksi
Special Processing (to reduce tensile stresses)	
Weldments	N/A
Environment	fab - controlled / shipping & storage - container, dessicant, etc / testing - controlled / pre-launch - controlled/ use - space
Protective Finish	Anodized per MIL-A-8625, Type II
Function of Part	It attaches the mixing tank to Box S plate.
Effect of Failure	Mixing tank will not be securely attached to the Box plate.
Evaluation of Stress Corrosion Cracking Susceptibility	The risk of SCC failure is minimal because the part's sustained tensile stress is low and the part is used in space vacuum.
Remarks	The raw material was provided to INFN by JSC. The material specification for the raw material is Boeing specification BMS 7-323C.

ISS MATERIALS USAGE AGREEMENT	USAGE AGREEMENT NO.	REV.	PAGE 1 OF 2
	ESCG/ISS-255		

TITLE:	CATEGORY:	EFFECTIVITY:
Lexan Decals, Alpha Magnetic Spectrometer 02 (AMS-02)	2	STS-134

TYPE OF DEVIATION:	REQUIREMENT DEVIATED:
☒ MATERIAL ☒ EQUIPMENT (NO. PER VEHICLE: 2)	☐ FLAMMABILITY ☐ TVS ☐ SCC ☐ OFFGASSING ☐ O_2 COMPATIBILITY ☒ OTHER ao/vuv, use T range

EQUIPMENT	PART NUMBER	MANUFACTURER
Decals	SDG39135888-004 and -005	NASA JSC

MATERIAL	TRADE NAME	SPECIFICATION	MANUFACTURER
Lexan 8A13-112, 3M 966, and 9900 Series Inks			GE Plastics, 3M, and Coates, Inc.

THICK (in.)	WEIGHT (lbs.)	AREA (in^2)	LOCATION	ENVIRONMENT		
				TEMPERATURE (°F)	PRESS (PSIA)	MEDIA
0.015 0.015		384 for -004 700 for -005 decal	☐ HABITABLE ☒ NONHABITABLE	-190 F to +200 F	Space Vacuum	Vacuum

APPLICATION (use second sheet if required)

The AMS-02 logo is reverse screen printed on the polished surface of Lexan 8A13-112 film of 0.015" thick using 9900 series color inks. Two large AMS-02 logo decals will be attached to the external surface of AMS-02 payload: one (SDG39135888-005, 26" W x 35" L) on the Port Debris Shield (7075-T73 Al alloy) and the other (SDG39135888-004, 19" W x 26" L) on the Starboard Debris Shield (7075-T73 Al alloy) as shown in Figure 1 and Figure 2, Attachment 1. The Lexan color decal is adhesive bonded to the 7075-T73 debris shields via 3M 966 adhesive transfer tape and also mechanically attached to the debris shields via 1/4" dia. fasteners/washers. One fastener/washer is used for mounting the Lexan decal (SDG39135888-05) to the Port Debris Shield and three fasteners/washers are used for mounting the Lexan decal (SDG39135888-04) to the Starboard Debris Shield.

(Continued on next page)

RATIONALE (use second sheet if required)

The acceptance rationale for Atomic Oxygen/Vacuum Ultraviolet Radiation (AO/VUV):
- The color pattern of AMS-02 logo is too complicate for the approved metalphoto decal process, which does not have the colors needed for the AMS-02 logo design. The AMS-02 logo can be made cost effectively by reverse screen printed on Lexan 8A13-112 film.
- The effects of AO/VUV on the Lexan decals were evaluated by JSC Contamination Group. The contamination to ISS caused by AO/VUV degradation debris was determined to be minimum and considered acceptable. Lexan decals will be unreadable after 1.5 years or sooner because of AO erosion of Lexan surface and color change or yellowing of Lexan decal due to VUV exposure. Since the legibility of Lexan decals is not a safety issue, the Project will accept this consequence.

(Continued on next page)

APPROVALS

ORIGINATOR/ORGANIZATION	DATE	JSC MATERIALS AND PROCESSES TECHNOLOGY BRANCH	DATE
Chia-Chang Chen 4/9/10	4/8/10		4-19-10
PROJECT MANAGER	**DATE**	**PROGRAM MANAGER**	**DATE**
TRENT MARTIN	4/21/10		

JSC Form 1466 (Rev June 93) NASA-JSC

ISS MATERIALS USAGE AGREEMENT	USAGE AGREEMENT NO.	REV.	PAGE 2 OF 2
	ESCG/ISS-255		

TITLE:	CATEGORY:	EFFECTIVITY:
Lexan Decals, Alpha Magnetic Spectrometer 02 (AMS-02)	2	STS-134

APPLICATION (Cont.)

Lexan 8A13-112 (Material Code: 08097) is "A" rated for Thermal Vacuum Stability with Total Mass Loss (TML) of 0.19% and Volatile Condensable Material (VCM) of 0%. 3M966 adhesive (Material Code: 06531) is considered "A" rated for TVS and has VCM of 0.04%. The 9900 series ink (Material Code: 69967) is "C" rated for TVS with TML of 1.59% and VCM of 0.25%. Since the inks are sandwiched between the Lexan film and the debris shield, outgassing contamination of the Lexan decals is not an issue. Lexan 8A13-112 does not contain UV stabilizer additive and is not protected by any Atomic Oxygen (AO) resistant coating. The long term exposure of the Lexan decals in Atomic Oxygen/Vacuum Ultraviolet Radiation (AO/VUV) environment is a concern. 3M 966 adhesive has a use temperature range of -40 F to +300 F. The use temperature of -190 F for 3M 966 adhesive is a concern.

RATIONALE (Cont.)

The acceptance rationale for the use temperature range of Lexan decal and 3M 966 adhesive:
- Standard Lexan polycarbonate starts to melt at 300 F. The shrinkage of Lexan 8A13 film at 302 F is 1.4% per ASTM D1204 test. The heat deflection temperature of Lexan 8A13 film is 290 F by Thermalmechanical Analysis (TMA) at 1.8MPa. The worst case hot temperature of 200 F is below the heat deflection temperature of 290 F and should not be an issue for the Lexan 8A13 decals. The worst case cold temperature of -190 F is above the brittle temperature of Lexan 8A13 film (-211 F per ASTM D746 test). The Lexan 8A13 decals are dimensional stable in the use temperature range of -190 F to +200F.
- Based on the experience with aluminum Space Vision System (SVS) targets, which are bonded with 3M 966 to aluminum structure and exposed to the temperature range of -238 F to +350 F, 3M 966 adhesive is deemed acceptable for bonding the Lexan decals for use in the temperature range of -190 F to +200 F. To provide additional margin to assure that the decals will not come off the debris shield due to adhesive failure, 1/4" dia. fasteners and washers are used to mechanically attach the decals to the debris shields. This mitigation to reduce the risk of debris shield falling off is acceptable to the Project.

JSC Form 1466 (Rev June 93) NASA-JSC

Attachment 1

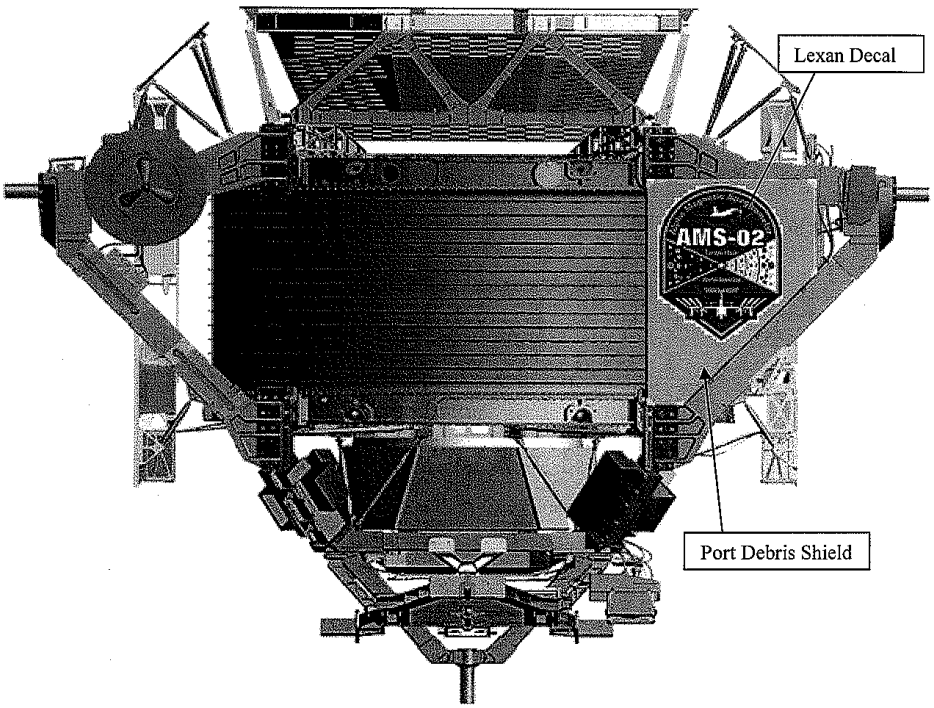

Figure 1: Location of AMS-02 Logo Decal on Port Debris Shield

Attachment 1 (Cont.)

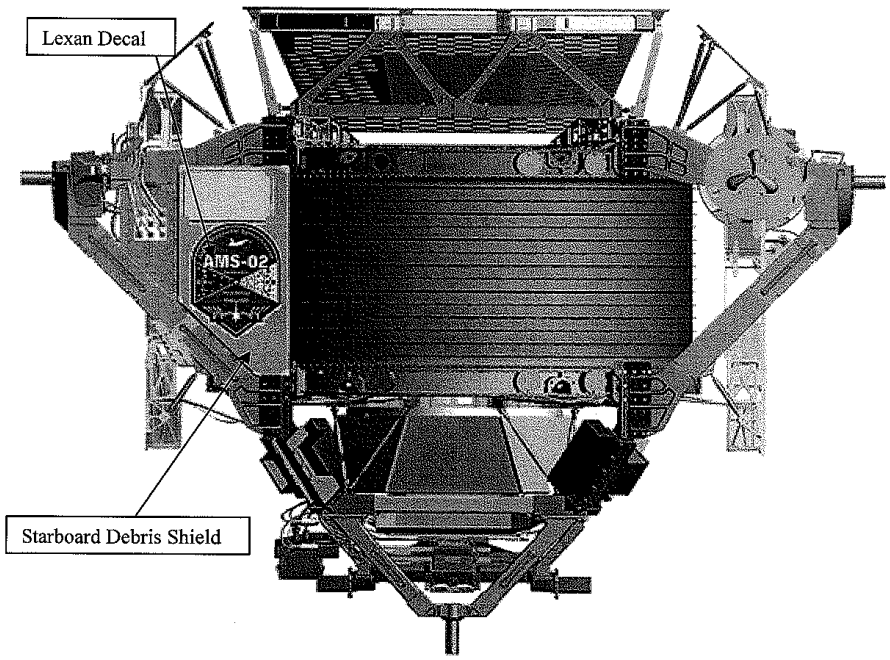

Figure 2: Location of AMS-02 Logo Decal on Starboard Debris Shield

ISS MATERIALS USAGE AGREEMENT	USAGE AGREEMENT NO. PI 524	REV.	PAGE 1 OF 2

TITLE:	CATEGORY:	EFFECTIVITY:
Utilization of SYNOLITE 0612-N-1	2	AMS-02 FLIGHT

TYPE OF DEVIATION: TVS	REQUIREMENT DEVIATED:
☒ MATERIAL ☐ EQUIPMENT (NO. PER VEHICLE: 1)	☐ FLAMMABILITY ☒ TVS ☐ SCC ☐ OFFGASSING ☐ O_2 COMPATIBILITY ☐ OTHER

EQUIPMENT	PART NUMBER	MANUFACTURER
N/A		

MATERIAL	TRADE NAME	SPECIFICATION	MANUFACTURER
Unsaturated Polyester	SYNOLITE 0612-N-1	NONE	DSM Composite Resins AG

THICK (in.)	WEIGHT (lbs.)	AREA (in²)	LOCATION	ENVIRONMENT		
				TEMPERATURE (°F)	PRESS (PSIA)	MEDIA
N/A	N/A	N/A	☐ HABITABLE ☒ NONHABITABLE	-191 to +82	Space Vacuum	Vacuum

APPLICATION (use second sheet if required)

SYNOLITE 0612-N-1 is an unsaturated Polyester resin made by DSM Composite Resins AG . It will be utilized for manufacturing the CGS Zenith Radiator spokes. The spokes are manufactured by single-end continuous roving E glass fiber pultruded with the Polyester resin. The spokes are used to attach the Zenith radiator (Aluminum face sheets with ROHACELL core) to the Transition Radiation Detector (TRD) upper honeycomb panel (carbon fiber skin/5056 3/16 cell). No outgassing test data is available for SYNOLITE 0612-N-1. This MUA documents the support rationale for the use of SYNOLITE 0612-N-1.

RATIONALE (use second sheet if required)

See next page

APPROVALS Rajib Dasgupta 02/21/08

ORIGINATOR/ORGANIZATION	DATE	JSC MATERIALS AND PROCESSES TECHNOLOGY BRANCH	DATE
L. Cremonesi CARLO GAVAZZI SPACE	08.02.2008		2/21/08
PROJECT MANAGER	**DATE**	**PROGRAM MANAGER**	**DATE**
(CHRIS TUTT)	21 Feb 2008		2

JSC Form 1466 (Rev. June 93) NASA-JSC

ISS MATERIALS USAGE AGREEMENT	USAGE AGREEMENT NO.	REV.	PAGE 2 OF 2
	PI 524		

TITLE:	CATEGORY:	EFFECTIVITY:
Utilization of SYNOLITE 0612-N-1	2	AMS-02 FLIGHT

RATIONALE (Cont.)

The acceptance rationale for the use of SYNOLITE 0612-N-1 in the Zenith Radiator spokes is as follows:

1. Polyester resins of similar compositions to SYNOLITE 0612-N-1 have Volatile Condensable Material (VCM) less than 0.1%. HETRON 92FR/Fiberglass Style 7781 (Matl Code: 00059) is "A" rated for TVS when cured at 250 F for 6 hours. P-16-A/P-102 (Matl Code: 05755) is "C" rated for TVS but has a VCM value less than 0.1% when cured at room temperature for 8 hours. SYNOLITE 0612-N-1 will be cured at 266 F for 5 minutes minimum.
2. In the worst hot case, the TRD temperature is about 28 C while the Zenith radiator is about -6 C. The spoke temperature is somewhere between the -6 C and 28 C. The worst case hot temperature for the spoke is about 28 C (82 F). Outgassing is not expected to be an issue at 82 F for the spoke.
3. TRD is covered with MLI and the exposed surface areas of the spoke are limited as shown in Figure 1. The total exposed area for the 56 spokes is about 140 cm^2. The potential contaminated area will be the interior side of the Zenith radiator (facing the TRD MLI). Outgassing contamination on the interior side of the Zenith Radiator will not affect the performance and function of the Zenith Radiator. Outgassing contamination on the Zenith Radiator from the exposed surface of the Zenith Radiator spokes is not an issue in this configuration (see Figure 1).
4. No other suitable material is immediately available for this application in order to meet the time/schedule constraints.

JSC Form 1466 (Rev June 93) NASA-JSC

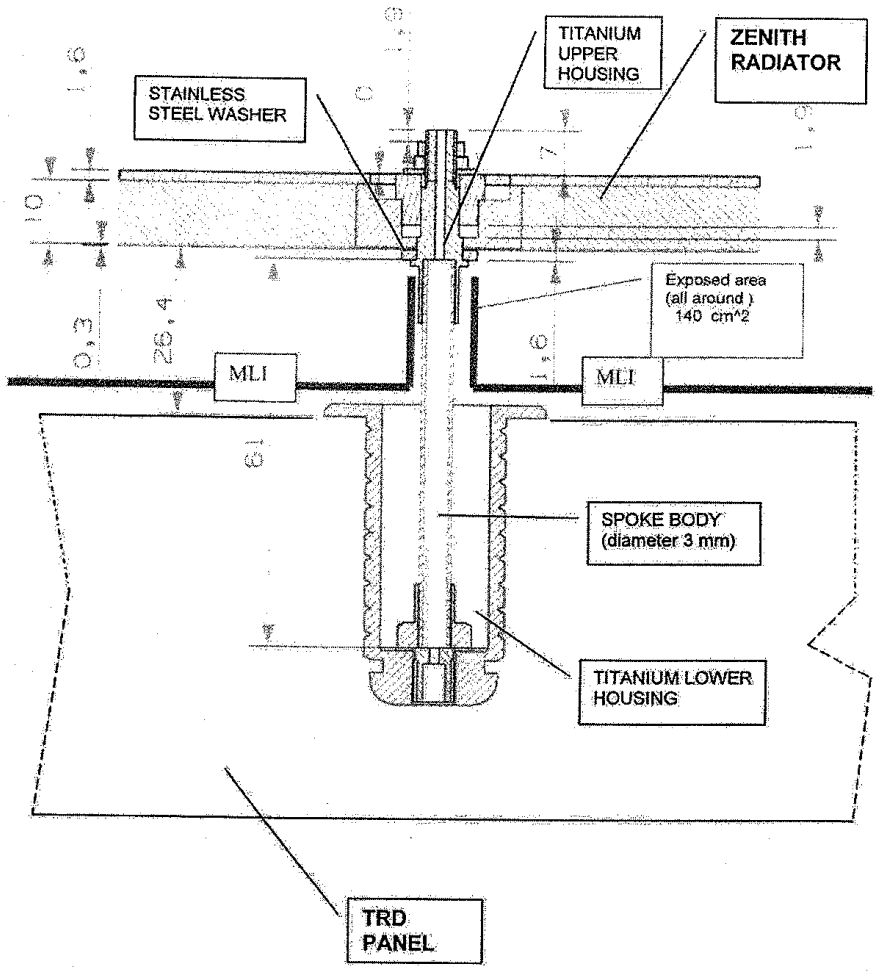

All dimensions are in mm

Figure 1: Zenith Radiator Spoke Joint Configuration

ISS MATERIALS USAGE AGREEMENT	USAGE AGREEMENT NO.	REV.	PAGE 1 OF 2
	ESCG/ISS-257		

TITLE:	CATEGORY:	EFFECTIVITY:
Al 7050-T7451Parts in Transition Radiation Detector (TRD) Gas Supply System, AMS-02	2	STS-134

TYPE OF DEVIATION:	REQUIREMENT DEVIATED:
☒ MATERIAL ☐ EQUIPMENT (NO. PER VEHICLE:)	☐ FLAMMABILITY ☐ TVS ☒ SCC ☐ OFFGASSING ☐ O_2 COMPATIBILITY ☐ OTHER

EQUIPMENT	PART NUMBER	MANUFACTURER
	See Table I of Attachment 2	INFN

MATERIAL	TRADE NAME	SPECIFICATION	MANUFACTURER
See Table I of Attachment 2			

THICK (in.)	WEIGHT (lbs.)	AREA (in^2)	LOCATION	ENVIRONMENT		
				TEMPERATURE (°F)	PRESS (PSIA)	MEDIA
			☐ HABITABLE ☒ NONHABITABLE	-58 F to +140 F	Space Vacuum	Vacuum

APPLICATION (use second sheet if required)

Alpha Magnetic Spectrometer-02 (AMS-02) is an ISS experiment payload, which will be attached to ISS S3 Zenith Inboard Payload Attachment System (PAS). It uses a Nd-Fe-B permanent magnet and several high energy particle detector systems to collect cosmic ray data. The TRD, one of AMS-02 experiment hardware, is designed to discriminate between electrons/anti-protons and positrons/protons over the Energy range E= 1 - 500 GeV. This is accomplished by detecting X-ray photons emitted by highly energetic electrons and positrons when they pass through a radiator. The radiation is detected in straw tubes filled with 80% Xenon (Xe) and 20% Carbon Dioxide (CO2). Xe gas ionizes very easily and is thus very sensitive to the passage of photons. The TRD Gas Supply System supplies a mixture of 80% Xenon (Xe) and 20% Carbon Dioxide (CO2) to the straw tube modules of TRD.

(Continued on next page)

RATIONALE (use second sheet if required)

Sustained tensile stresses in all identified parts are well below the yield levels of the parent material. The individual pieces were all machined out of 8" thick 7050 plate stock and were not reheated during machining. All pieces showed no signs of significant warpage, which gives confidence that residual stresses in the parent metal were low. The Box S plate and lower bracket form the primary structure for this assembly, but are connected by a large spring. While the primary purpose of the spring is vibration isolation during launch, it has the secondary effect of allowing both the plate and the bracket to deform as needed to prevent the buildup of assembly stresses in the unit. The mixing tank brackets support a sliding interface along the tank axis, which limits buildup of stresses either from tank assembly or from tank pressurization loads.

(Continued on next page)

APPROVALS

ORIGINATOR/ORGANIZATION	DATE	JSC MATERIALS AND PROCESSES TECHNOLOGY BRANCH	DATE
Chuahang 6/11/10	6/11/10		6-15-10
PROJECT MANAGER	**DATE**	**PROGRAM MANAGER**	**DATE**
Chris Tutt	14 Jun 2010		

JSC Form 1466 (Rev June 93) NASA-JSC

ISS MATERIALS USAGE AGREEMENT	USAGE AGREEMENT NO.	REV.	PAGE 2 OF 2
	ESCG/ISS-257		

TITLE:	CATEGORY:	EFFECTIVITY:
Al 7050-T7451Parts in Transition Radiation Detector (TRD) Gas Supply System, AMS-02	2	STS-134

APPLICATION (Cont.)

The TRD Gas Box S contains the gas reserves for the TRD. The Box S has three tanks: one Xe tank, one CO2 tank, and one mixing tank. The gas released from the Xe and CO2 tanks is mixed in the mixing tank for distribution to the straw tubes. The three tanks are mounted on the Box S plate, which is attached to the Upper Unique Support Structure-02 (USS-02) (see Figure 1, Attachment 1). The Box S plate, the lower bracket, and the mixing tank brackets (see Figure 2, Attachment 1) are made of 7050-T7451 Al alloy, which is a Table II material with moderate resistance to SCC per MSFC-STD-3029, Guidelines for the Selection of Metallic Materials for Stress Corrosion Resistance in Sodium Chloride Environments. This MUA provides the acceptance rationale for the use of the 7050-T7451 plate and brackets.

Rationale (cont.)

The system contains no magnetic materials and will not be loaded by operation of the AMS-02 magnet. Loads included by the gravity environment are provided in Table I of Attachment 2. SCC susceptibility was evaluated for each of these Al 7050-T7451 parts per MSFC-STD-3029, Section 5.4 (see Table II, Attachment 2). The risk of SCC failure is considered minimal for each of these Al 7050-T7451 parts.

Attachment 1

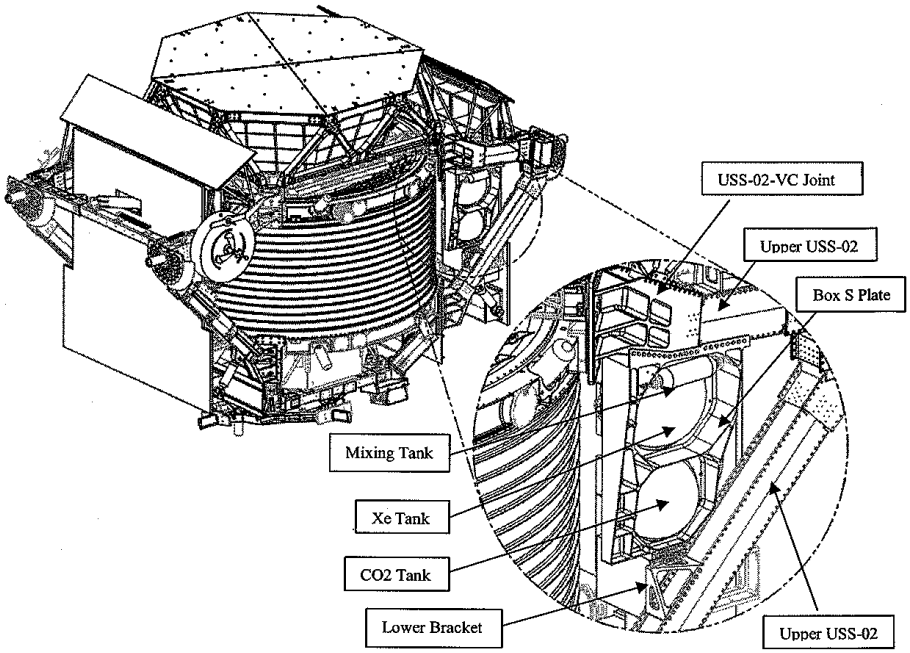

Figure 1: Location of TRD Box S Plate in AMS-02

Attachment 1 (Cont.)

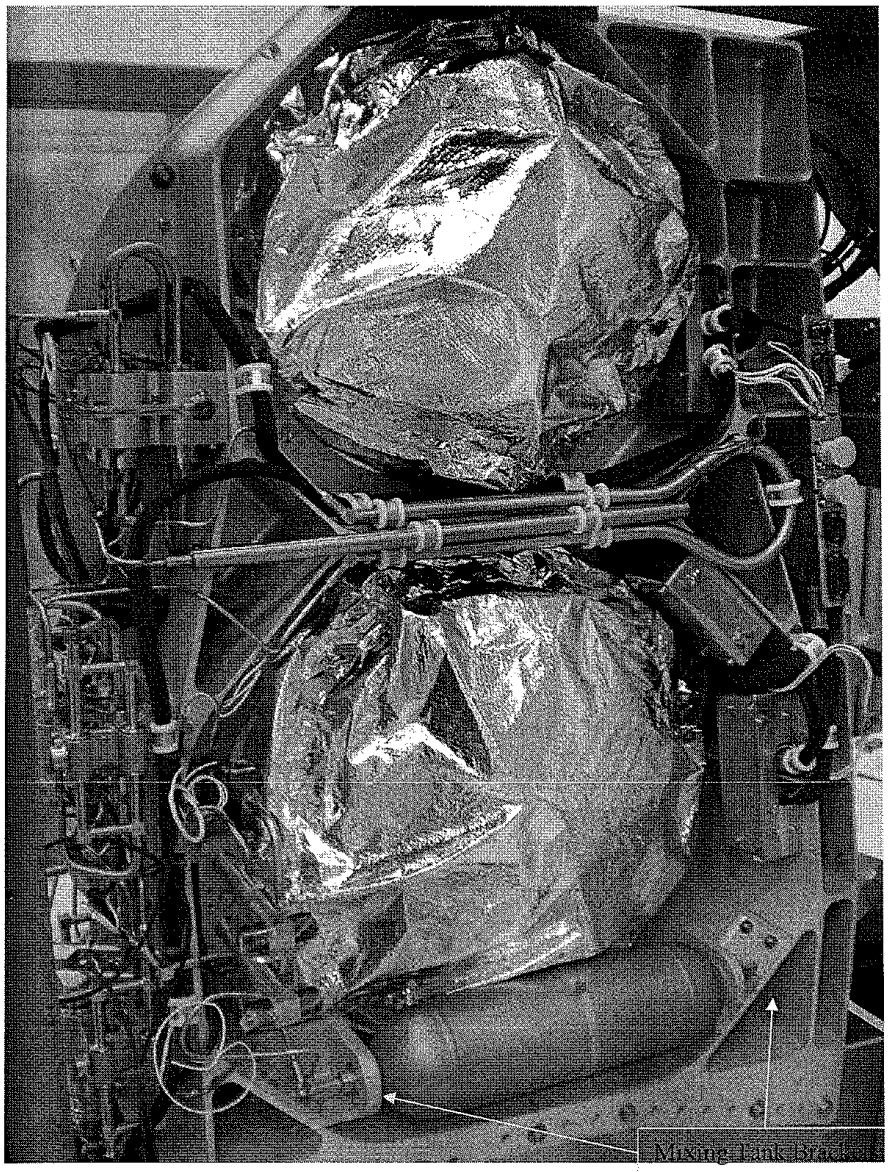

Figure 2: Box S Plate Pre-Installation (Upside Down) showing mixing tank brackets

Attachment 2

Table I: List of 7050-T7451 Al Alloy Parts in TRD Gas Supply System (GSS)

Subsystem	Part Name	Part Number	Material	Sustained Tensile Stress
TRD GSS	Plate	TRD_GAS_SYS_BOX_S_0001	Al 7050-T7451	Max Prin: 0.9290 ksi Von Mises: 0.7378 ksi
TRD GSS	Lower Bracket	TRD_GAS_SYS_BOX_S_0011	Al 7050-T7451	Max Prin: 0.0073 ksi Von Mises: 0.0067 ksi
TRD GSS	Mixing Tank Sliding Bracket	TRD_GAS_SYS_BOX_S_0012	Al 7050-T7451	Max Prin: 0.2728 ksi Von Mises: 0.2322 ksi
TRD GSS	Mixing Tank Fixed Bracket	TRD_GAS_SYS_BOX_S_0013	Al 7050-T7451	

Note: The sustained stress reported for the brackets are the highest stress in either bracket.

Attachment 2 (Cont.)

Table II: SCC Evaluation for Al 7050-T7451 Parts per MSFC-STD-3029

1	
Part Number	TRD_GAS_SYS_BOX_S_0001
Part Name	Plate
Next Assembly Number	
Manufacturer's Name, Address, Phone Number	INFN
Material	AL 7050
Heat Treatment	T7451
Size and Form	Plate, 6.1" x 21.9" x 34"
Sustained Tensile Stresses-	
a. Process Residual Contribution	-T7451 temper is mechanically stress relieved.
b. Assembly Contribution	Negligible, no press fit, no over-torque fasteners
c. Design (Static) Contribution	Max Principal: 0.9290 ksi, Von Mises: 0.7378 ksi
Special Processing (to reduce tensile stresses)	
Weldments	N/A
Environment	fab - controlled / shipping & storage - container, dessicant, etc / testing - controlled / pre-launch – controlled/ use - space
Protective Finish	Anodized per MIL-A-8625, Type II
Function of Part	It provides structural support for Xe tank, CO2 tank, and the mixing tank.
Effect of Failure	Release of gas tanks
Evaluation of Stress Corrosion Cracking Susceptibility	The risk of SCC failure is minimal because the part's sustained tensile stress is low and the part is used in space vacuum.
Remarks	The raw material was provided to INFN by JSC. The material specification for the raw material is Boeing specification BMS 7-323C.

2	
Part Number	TRD_GAS_SYS_BOX_S_0011
Part Name	Lower Bracket
Next Assembly Number	
Manufacturer's Name, Address, Phone Number	INFN
Material	AL 7050
Heat Treatment	T7451
Size and Form	Plate, 4.4" x 7.2" x 7.7"
Sustained Tensile Stresses-	
a. Process Residual Contribution	-T7451 temper is mechanically stress relieved.
b. Assembly Contribution	Negligible, no press fit, no over-torque fasteners
c. Design (Static) Contribution	Max Principal: 0.0073 ksi, Von Mises: 0.0067 ksi
Special Processing (to reduce tensile stresses)	
Weldments	N/A
Environment	fab - controlled / shipping & storage - container, dessicant, etc / testing - controlled / pre-launch - controlled/ use - space
Protective Finish	Anodized per MIL-A-8625, Type II
Function of Part	It is one of the two structural interfaces to Upper USS.
Effect of Failure	Box S will be released from one end of attachment to Upper USS.
Evaluation of Stress Corrosion Cracking Susceptibility	The risk of SCC failure is minimal because the part's sustained tensile stress is low and the part is used in space vacuum.
Remarks	The raw material was provided to INFN by JSC. The material specification for the raw material is Boeing specification BMS 7-323C.

3	
Part Number	TRD_GAS_SYS_BOX_S_0012
Part Name	Mixing Tank Sliding Bracket
Next Assembly Number	
Manufacturer's Name, Address, Phone Number	INFN
Material	AL 7050
Heat Treatment	T7451
Size and Form	Plate, 1.8" x 0.4" x 2.5" for bracket (item 2) and 1.8" x 2.2" x 3.1" for plate (item 3)
Sustained Tensile Stresses-	

JSC MATERIALS AND FRACTURE CONTROL CERTIFICATION

PROJECT/SUBSYSTEM MANAGER: Trent Martin/EA3	REF: MATL – 11 – 009A
HARDWARE NAME: Alpha Magnetic Spectrometer -02 (AMS-02) Payload Assembly	PART NUMBER: SEG39135720-304

APPLICABLE REQUIREMENTS:

Materials Requirements:

- ☒ JSC 27301F, Materials Control Plan for JSC Flight Hardware
- ☒ NASA-STD-6016, Standard Materials and Processes Requirements for Spacecraft
- ☒ NSTS 1700.7B, Safety Policy and Requirements for Payloads Using the Space Transportation System
- ☐ Other:

Fracture Control Requirements:

- ☐ JSC 25863B, Fracture Control Plan for JSC Space-Flight Hardware
- ☐ NASA-STD-5019, Fracture Control Requirements for Spaceflight Hardware
- ☒ Other: NASA-STD-5003, JSC 25863A

SPECIFIC ASSESSMENTS:

- ☒ Flammability
- ☒ Toxicity
- ☒ Stress Corrosion Cracking
- ☒ General Corrosion
- ☒ Fracture Control (☐ Not Applicable; Concurrence:)
- ☒ Age Life ☐ Other:
- ☒ Atomic Oxygen/Ultraviolet
- ☒ Thermal Vacuum Stability
- ☒ Fluid Compatibility: See fluid compatibility assessment in Attachment 1
- ☒ Microbiological Resistance

LOCATION:

- ☐ Orbiter Crew Cabin
- ☒ Orbiter Payload Bay
- ☐ Progress
- ☐ Spacehab
- ☐ MPLM
- ☐ Soyuz
- ☐ ATV
- ☐ HTV
- ☒ Space Station: ☐ Internal ☒ External
- ☐ Other:

MATERIALS USAGE AGREEMENTS (MUAs):

- ☐ No MUAs
- ☒ MUA Number(s): PI 217, AG 577, ISS-256, and ISS-257 for SCC; ISS-255 for AO/VUV and Use Temp Range.

Deviation: SCC, AO/VUV and Use Temperature Range

LIMITATIONS: ☐ No Limitations

- ☒ Materials: Compliance with requirements for external environment survivability is excluded from this certification
- ☐ Fracture Control:

This JSC Materials and Fracture Control Certification is consistent with existing Materials or Fracture Control Reciprocal Agreements. Materials Certification to JSC 27301 or NASA-STD-6016 and Fracture Control Certifications to JSC 25863 or NASA-STD-5019 comply with applicable materials and processes and fracture control requirements in the following program-specific documents: SE-R-0006D, Space Shuttle System Requirements for Materials and Processes; SSP 30233G, Space Station Requirements for Materials and Processes; NASA-STD-5003, Fracture Control Requirements for Payloads Using the Space Shuttle; SSP 30558C, Fracture Control Requirements for Space Station; SSP 52005B, ISS Payload Flight Equipment Requirements and Guidelines for Safety-Critical Structures.

APPROVALS

Fracture Control Manager, S. Forth	4/15/11 Date	GFE Materials Control Manager, M. Pedley	4/15/11 Date

MATL– 11 – 009A

ATTACHMENT 1

Hardware Acceptance Summary Report for Materials

Note for Revision A (Materials):
Revision A updates the on-orbit life of the AMS-02 payload from 10 years to 20 years. The potential safety hazards associated with the degradation of the non-metallic materials exposed to the space environment over 20 years were evaluated. Based on ES4's analysis, only 2.3 square meters of the silver FEP (Teflon) thermal tape on one of the face of the RAM box tube may generate silver oxide particles (Foreign Object Debris) after 17.9 years (see Attachment 2). The thermal tape was added to the payload to improve thermal performance when its design included a cryogenically cooled superconducting magnet. It is no longer required for functionality because the superconducting magnet was replaced by a permanent magnet. The silver oxide particles will not present an external contamination hazard in the projected 20-year life for AMS-02 payload. According to the Project Thermal Analyst there are no safety issues with the complete degradation of the 5-mil thick silver FEP tapes on the AMS-02 payload. Based on the above-mentioned external contamination and thermal control assessments of the degradation of the silver FEP tapes, it is acceptable to extend the on-orbit life of the AMS-02 payload to 20 years. Revision A updates only the Aging and AO/VUV assessments of the original materials and fracture control certification.

Note for Revision A (Fracture Control):
Fracture control assessments for all fracture critical parts that see significant loading on-orbit were re-run with an on-orbit spectrum scaled for the 20 year life. As with the baseline 10 year analysis, critical crack sizes were not reached for any of the fracture critical parts. The fracture control analysis for the 20 year life is documented in two reports that are now part of the AMS-02 acceptance data package (ADP):

- ESCG-4450-11-STAN-DOC-0007, Revised Fatigue and Fracture Control Assessment of the Alpha Magnetic Spectrometer-02 (AMS-02) Unique Support Structure (USS-02), Vacuum Case, and Payload Attach System (PAS) related to on-orbit 20 year Life Extension, February 2011.
- ESCG-4450-09-STAN-DOC-0032B, Revised Fracture Control Summary of the Alpha Magnetic Spectrometer-02 (AMS-02) for 20 Year On-Orbit Life, February 2011.

The pressurized systems for the AMS-02 are not affected by the 20 year life extension. The gas supplies will be depleted during the original 10 year baseline life.

Original Assessment from MATL-11-009:

Hardware Descriptions

The Alpha Magnetic Spectrometer -02 (AMS-02) payload is designed to measure the cosmic rays spectrum and their charge, momentum, and velocity in space. It will be attached to ISS S3 Zenith Inboard Payload Attachment System (PAS). It uses a Neodymium-Iron-Boron (Nd-Fe-B) permanent magnet and several high energy particle detector systems to collect cosmic ray data.

The AMS-02 payload consists of the AMS-02 experiment hardware provided by the International AMS Collaborators and the AMS-02 payload integration hardware provided by the National Aeronautics and Space Administration (NASA). The AMS-02 experiment hardware is certified to meet the materials safety requirements of NSTS 1700.7B only. The NASA provided Government-Furnished Equipment for the AMS-02 payload integration is certified to meet NSTS 1700.7B, JSC 27301F, and NASA-STD-6016. This certification only covers the AMS-02 payload mounted in the Orbiter payload bay and ISS external structure. The Shuttle Digital Data Recording System (DDRS) was certified on MATL-09-036 and ISS DDRS was certified on MATL-10-065A.

The AMS experiment hardware provided by Massachusetts Institute of Technology (MIT) and International Collaborators include the Permanent Magnet System, Transition Radiation Detector (TRD), TRD Gas System, Upper and Lower Time-Of-Flight (TOF) Scintillator Assembly, AMS-02 Silicon Tracker Assembly, Tracker Plane 1N, Tracker Plane 6, Tracker Alignment System (TAS), Anti-Coincidence Counters (ACC), Ring Imaging Cerenkov Counter (RICH), Electromagnetic Calorimeter (ECAL), Thermal Control System (TCS), thermal blankets, Global Positioning System (GPS) Receiver and antenna, and Star Tracker.

The AMS-02 payload integration hardware include the previously certified Shuttle and ISS hardware, Vacuum Case (VC), Micrometeoroid and Orbital Debris (MMOD) Shields, Payload Attach System (PAS), EVA Interface Panel, Interface Panel A, Shuttle and ISS DDRS and associated cables, power and data cables from interface panels to various electrical boxes, J-Crate, and Power Distribution System (PDS), thermal blankets, and Unique Support Structure-02 (USS-02).

Permanent Magnet (PM):
In the AMS-02 experiment, the PM provides the magnetic field to bend the trajectories of incoming electrically charged particles. The particle trajectories are recorded by the AMS high energy particle detector system for search of anti-matter and dark matter in space. The PM is constructed of neodymium-iron-boron (Nd-Fe-B) magnets arranged in a cylindrical structure and capable of producing a uniform 1400 Gauss field in the interior bore. The same Nd-Fe-B PM was used on AMS-01flown on STS-91. It was refurbished and

its structural integrity was verified to be acceptable for AMS-02. No signs of corrosion and structural damage were found. The closeout weld was re-inspected and no flaws/cracks were found. All accessible fasteners were removed and replaced with new fasteners provided by NASA/JSC. The epoxy adhesives used in the PM are J-39 (Material Code: 03493) and FA-56/BA99 (Material Code: 03500). The J-39 adhesive was used to bond the individual blocks of magnetic material to each other. The FA-56/BA99 adhesive was used to fill in all the interior spaces of the magnet casing and completely encapsulate the magnet blocks and J-39 joints. The adhesives are sealed inside the magnet casing to prevent any outgassing issue. The degradation of the epoxy adhesives over time will not affect the structural integrity of the PM because its structural integrity was qualified without the adhesives. The PM is supported inside the VC by the Double X (DX) 7075-T7351 Al alloy structure and sixteen Ti-6Al-4V support struts. The upper and lower flanges of the PM are bolted to the upper and lower conical flanges of the VC.

Transition Radiation Detector (TRD):
The TRD detector comprises 5248 proportional tubes (straws) which are made from a multi-layer wound composite structure. The composite includes layers of polyurethane, carbon-polyimide, aluminum, and Kapton. The TRD is constructed from 20 layers of straw modules where a gap of 0.91 inch between the layers is filled with a radiator material (LRP 375 BK, polyethylene/polypropylene fleece). A straw module consists of 16 straws bonded together with 6 stiffeners running alongside the straws using EA934NA adhesive. The straw ends are bonded into polycarbonate end pieces with EA934NA adhesive. The end pieces contain the wire fixation pieces, the gas distributor, and the gas seal. The 20 layers of straw modules and radiators are mounted in an octagon structure, which consists of 8 honeycomb side panels (1.18" thick, carbon fiber skin/ Al 5056 honeycomb), a lower honeycomb support plate (carbon fiber skin/ Al 5056 honeycomb), and upper honeycomb support plate (carbon fiber skin/ Al 5056 honeycomb). The straw modules will be filled with a Xenon (Xe)/CO2 (80:20) mixture to detect Transition Radiation (TR) photons generated inside the radiator material. The TRD M-structure, corner brackets, and upper brackets are made of 7075-T7351 Al alloy.

The TRD Gas Supply System supplies a mixture of 80% Xe and 20% CO2 to the straw modules of TRD detector. The TRD gas supply system includes three tanks: one Xe tank, one CO2 tank, and one mixing tank. These tanks are mounted to a support bracket and covered by a Micrometeorites and Orbital Debris (MMOD) shield. The support bracket is mounted to the wake side of the USS-02. The fittings, tubing, connections, manifolds in the gas supply system are made of CRES 316/CRES 304. Other structural parts include 7050-T7451 box S plate and lower bracket, and 6061-T6 Xe tank bracket, box C base plate, and valve bracket. The Xe and CO2 tanks are made of the carbon fiber Composite Overwrapped CRES 301pressure vessels. The mixing tank is made of CRES 321 cylinder and CRES 304L dome.

Time-Of-Flight (TOF) Scintillator Assembly:
The TOF scintillator counters comprise four planes of detectors: two atop the AMS tracker core, and two below. Planes 1, 2, and 4 have eight detector paddles per plane and Plane3 has ten detector paddles. Each detector paddle made of polyvinyl toluene is enclosed in a cover made of carbon fiber. At the end of each paddle are Lucite light guides, which direct the light of scintillation to photo multipliers. The TOF measures the particle trajectory and the absolute charge of the particle when a particle crosses the bore of PM and Silicon Tracker. The upper TOF honeycomb (2024-T81skin/5052 core) structure attaches to the TRD corner joints via 7075-T7351 brackets. The lower TOF honeycomb structure attaches to the lower USS-02 via 7075-T7351 struts. Non-metallic materials used include Plexiglass for light guides, Araldite AV138, CV1146, and CV1152 for adhesives and conformal coating, and DC93-500 for potting/encapsulant.

Anti-Coincidence Counters (ACC), Ring Imaging Cerenkov Counter (RICH), Electromagnetic Calorimeter (ECAL):
The ACC comprises sixteen interlocking scintillating panels that are between the Silicon Tracker shell and the PM. The ACC detects and identifies particles that enters or exits the Trackers through the side or that have not cleanly traversed the Tracker. The panels fabricated from BICRON BC414 are supported by a M40J/CE Carbon Fiber Composite (CFC) support cylinder.

The RICH is used to measure the velocity of the particles that traverse the AMS-02. The materials used in RICH include 7075-T7351, 6061-T651, CRES A286, 304, 316, 15-5PH H1025, EX15115 cyanate ester/graphite for reflector, Vacoflux 50 Co-Fe alloy and ARMCO soft iron for PMT shielding, silica aerogel, and Sodium Fluorite, CV1152 silicone, AV138, and 2216 epoxy adhesives.

The ECAL is a fine grained lead-scintillating fiber sampling calorimeter. It measures the energy of electrons, positrons, and gamma rays up to 1Tera Electron Volt (TeV). The major materials used in ECAL include 2014-T6 I-beam and side panel, 2024-T4 face plate, 7050-T7451 bracket and support beam. Non-metallic materials used include Acrylic (PMMA) light guides, polycarbonate Photo Multiplier Tube (PMT) support, DC93-500 potting compound, Therm-A-gap A274, and T274 silicone elastomer.

Unique Support Structure-02 (USS-02):
The USS-02 is the primary structural element of the AMS-02 payload. It supports the PM and the AMS-02 experiment hardware during launch, landing, and on-orbit loading, and integrates them with Shuttle and ISS. The USS-02 consists of five primary subassemblies- the upper USS-02, Vacuum Case (VC), lower USS-02, Keel, and PAS. Metallic materials used in upper and lower USS-02 include Custom 455 H1000, 7050-T7451, 7075-T73411, and 6061-T6511. Metallic materials used in VC include CRES A286, 7050-T7451 plate, 2219-T62 conical flange, 7050-T7451 rolled ring forging, and 7050-T7452 rolled ring forging. Metallic materials used in PAS include 7050-T7451, CRES 15-5PH H1025, and CRES A286.

SPECIFIC MATERIALS ASSESSMENTS

Stress Corrosion Cracking (SCC):
Many non-Table I materials for SCC were used for major structural components of both AMS payload integration hardware and AMS experiment hardware. The non-Table I materials used in the payload integration hardware include Al alloy 7050-T7452 rolled ring forging for the outer cylinder, lower support ring, and upper support ring of vacuum case assembly, Al alloy 7050-T7451 interface plates of vacuum case assembly, Al alloy 7050-T7451 structural parts of lower and upper USS, Al alloy 7050-T7451 guide pins, aft and vertex brackets, bridge, and platform of Payload Attach System (PAS), Al alloy 7050-T7451 clevis, Payload Disconnect Assembly (PDA) mounting bracket, PDA harness bracket of Remotely Operated Electrical Umbilical (ROEU). The non-Table I materials used in the AMS-02 experiment hardware include the Al alloy 7050-T7451 bracket and support, Al alloy 2014-T6 I-frame and side panel, and Al alloy 2024-T4 face plate of Electromagnetic Calorimeter (ECAL), and Al alloy 7050-T7451 plate and brackets of TRD Gas Supply System. The acceptance rationale for the use of these non-Table I materials are documented in the following NASA MUAs:

- AG 577, 7050-T7451/T7452 Parts in USS, VC, PAS, and ROEU of AMS-02
- ISS-256, Electromagnetic Calorimeter (ECAL), AMS-02
- ISS-257, Al 7050-T7451Parts in Transition Radiation Detector (TRD) Gas Supply System, AMS-02

Al alloy 7175-T7351used in some structural parts of AMS-02 Thermal Control System (TCS) and Power Distribution System (PDS) is not listed in Table I materials for SCC in MSFC-STD-3029, Guidelines for the Selection of Metallic Materials for Stress Corrosion Cracking Resistance in Sodium Chloride Environments. Test specimens of 7175-T7351 Al alloy were tested for SCC. As a result of the SCC testing, 7175-T7351 Al alloy was classified as Table I material for SCC. The SCC test results are documented in AMS02-RA-CGS-001, which is part of the ISS MUA#PI 217 (Utilization of Aluminum Alloy 7175-T7351).

All other metallic structural parts are made of Table I materials for SCC.

General Corrosion:
The metallic materials used in the NASA-provided payload integration hardware were evaluated for general corrosion and found acceptable. Complete verification of acceptable corrosion protection finishes on metallic parts of some AMS experiment hardware is not possible because of incomplete paperwork/traceability and missing drawings. However, the International Collaborators followed the same AMS-02 corrosion control plan for their hardware and consulted with the Materials Engineers in the AMS-02 Project team. Furthermore, the AMS-02 experiment hardware is stored in a controlled laboratory environment, protected from moisture during transportation on the ground, and used in space vacuum. General corrosion is not expected to be an issue with the AMS-02 experiment hardware.

Flammability:
The AMS-02 payload has no flammable exposed surfaces. Most of the exterior surfaces of the AMS-02 payload are covered with 1) MLI blankets with a non-flammable outer layer of Teflon-coated beta-cloth, 2) non-flammable silver Teflon tape, and 3) non-flammable SG121FD white paint. The 0.015" thick Lexan 8A13-112 film used for the STS134 decal (10" W x 10" L) on the Starboard Debris Shield, and the AMS-02 logo decals (26"W x 35" L, 19"W x 26" L) on the Port and Starboard Debris Shields passed the flammability test in 20.9% oxygen (Reference: WSTF# 10-44147). The aluminum foil covered part of the 1N tracker plane for Atomic Oxygen (AO) protection is not flammable.

The external electrical and optical wiring/cables have either non-flammable Teflon insulation or covered with non-flammable Teflon tape or Permacel P 213 glass cloth tape. There are no ignition sources for flammability because the AMS-02 payload is powered off for launch and all entry phases. The fire hazard of ammonia leakage from the AMS-02 thermal control system in the payload bay has been evaluated. The total amount of ammonia in the AMS-02 thermal control system is 1377.8 grams. The leakage of 1377.8 grams (3.03 lbs) of ammonia in the payload bay will not form a flammable gas mixture to support a fire (Reference: ESCG-4480-09-MAAN-MEMO-0039). The flammability of the AMS-02 payload in the payload bay is not an issue.

Toxicity:
Offgassing toxicity in the open environment of payload bay is not an issue.

Aging:
The NASA-provided payload integration hardware was evaluated for aging and found acceptable with few exceptions. Except for the 5 mil thick silver Teflon tape and the 15 mil thick Lexan decal, the external MLI blanket and SG121FD silicone paint used for the passive thermal control system will have acceptable material degradation for 20 years. The Atomic Oxygen erosion analysis of the silver FEP tapes on the AMS-02 payload showed that only the silver FEP tapes on the RAM box tube are in direct RAM Atomic Oxygen (AO) flux and may be completely eroded in 18 years. Using the AO flux of 5.0 x 10E21 atoms/cm^2 per year and the Materials International Space Station Experiment (MISSE) -2 AO erosion yield data for polycarbonate, the 15 mil thick Lexan decal will be completely eroded in 2 years in the worst case scenario. This certification does not cover the age life of AMS experiment hardware. The International Collaborators are responsible for the age life of their hardware.

Atomic Oxygen/Vacuum Ultraviolet (AO/VUV):
Except for the Teflon-coated Beta cloth, 5 mil thick silver Teflon tape, aluminum foil, SG121FD white silicone paint, Lexan 8A13-112 decal, and Permacel P 213 glass cloth tape, all non-metallic materials are protected from AO/VUV exposure. The Teflon-insulated and Teflon-covered wiring/cables are wrapped with Permacel P 213 glass-cloth tape for long term AO/VUV protection. Most of the external cables/wiring are covered with the Teflon-coated Beta cloth MLI blanket for additional AO/VUV protection. The Teflon-coated Beta cloth, aluminum foil, Scotch 79 glass cloth tape, and Permacel P 213 glass cloth tape have acceptable AO resistance for 20 years based on past flight experience. The Lexan 8A13-112 decal does not contain any UV stabilizer additive and is not protected by any AO resistant coating. The Lexan 8A13-112 decal is expected to become illegible soon after exposure to the on-orbit environment because of AO erosion of the Lexan surface and color changes (bleaching) due to VUV exposure. Since the legibility of the Lexan decals is not a safety issue, the Project has accepted the consequence of Lexan decal degradation (Reference: ISS-255 MUA). The degradation of the SG121FD white silicone paint and the Lexan decal due to AO/VUV exposure of 20 years will not cause an external contamination hazard. The AO erosion of the 5 mil thick silver FEP tape on the AMS-02 payload was evaluated for potential Foreign Object Debris (FOD) hazard and hot temperature hazard. It was concluded that no FOD and thermal safety hazards will occur due to AO erosion of the 5 mil thick silver FEP tape in a projected 20-year life for the AMS-02 payload. However, The silver Teflon tape does not meet the JSC 27301 external environment survivability requirements for functionality, so compliance with the external environment survivability requirements is excluded from this certification.

Thermal Vacuum Stability (TVS):
All exposed materials on the external surfaces of the AMS-02 payload are "A" rated for thermal vacuum stability. These materials include the Teflon-coated Beta cloth, silver Teflon tape, SG121FD white silicone paint, Teflon wire insulation, Lexan 8A13-112, Tefzel cable tie, Scotch 79 glass cloth tape, and Pamacel 213 glass cloth tape. The AMS-02 payload meets the materials and processes requirements for outgassing in SSP30233 (Total Mass Loss (TML) < 1.0% and Collected Volatile Condensable Materials (CVCM) <0.1%). However, the overall external contamination impact of the AMS-02 payload is the responsibility of the ISS Space Environments Team and is not covered by this certification. A list of major exposed materials along with their outgassing test data per ASTM E595 and the outgassing rate data per ASTM E1559 if available have been provided to the ISS Space Environments Team for the outgassing contamination analysis of AMS-02 payload.

Fluid Compatibility:
Anhydrous ammonia and Carbon Dioxide (CO_2) are used as heat transfer fluids for the AMS-02 thermal control system. Xenon and CO_2 gasses are used to provide a mixture of 80% Xenon (Xe)/20% CO_2 for use in the TRD straw tubes. The 6063-T5 heat pipes used in the main and track radiators and other components of the AMS-02 thermal control system are compatible with the anhydrous ammonia refrigerant. The wetted CRES 316L line, CRES 304L pump, Al alloy 6061 condenser, CRES 316LN accumulator are compatible with the CO_2 cooling fluid in the Tracker Thermal Control System (TTCS). The carbon fiber composite overwrapped CRES 301tanks are compatible with the Xenon and CO_2 gases. The mixing tank made of CRES 321 cylinder and CRES 304L dome is compatible with the 80% Xenon/20% CO_2 gas mixture. The compatibility of anhydrous ammonia, carbon dioxide, Xenon gas, and Xe/CO_2 mix gas with the wetted components of the AMS-02 payload has been evaluated and found acceptable.

Microbiological Resistance:
The AMS-02 payload was evaluated for fungus resistance and found acceptable based on its accessibility for cleaning and its use environment in space vacuum.

Conclusion

The AMS-02 payload meets the materials safety requirements of NSTS 1700.7B and is safe to fly for 20 years on ISS.