PAYLOAD FLIGHT HAZARD REPORT			a. NO: AMS-02-F20
b. PAYLOAD	Alpha Magnetic Spectrometer-02 (AMS-02)		c. PHASE: II
d. SUBSYSTEM:	Tracker Alignment System	e. HAZARD GROUP: Injury/Illness	f. DATE: May 22, 2006
g. HAZARD TITLE:	Crew Exposure to Coherent Light		i. HAZARD CATASTROPHIC **X** CATEGORY: CRITICAL
h. APPLICABLE SAFETY REQUIREMENTS:	NSTS 1700.7B and ISS Addendum, 200.1b, 212.3		
j. DESCRIPTION OF HAZARD:	Operation of the Laser for the Tracker Alignment System makes use of coherent light pulses. Should these irradiate the Crew, there is a potential for ocular damage.		
k. CAUSES *(list)*	1. Laser Power Output Exceeds Design Capability 2. Loss of Beam Path Containment and Integrity		

o. APPROVAL	PAYLOAD ORGANIZATION	SSP/ISS
PHASE I		
PHASE II		
PHASE III		

PAYLOAD FLIGHT HAZARD REPORT	a. NO: AMS-02-F20
b. PAYLOAD Alpha Magnetic Spectrometer-02 (AMS-02)	c. PHASE: II

l. HAZARD CONTROL (CONTROL), m. SAFETY VERIFICATION METHODS (SVM), n. STATUS OF VERIFICATIONS (STATUS)	OPS CONTROL
1. CAUSE: Laser Power Output Exceeds Design Capability	
1.1 CONTROL: The Tracker Alignment System (TAS) generates laser energy from ten independent laser diodes, pairs of the diodes contained within five Laser Fiber Coupler (LFCR) boxes. This energy is generated by Eagleyard EYP-RWL-1083 infrared (1083 nm) laser diodes with a maximum power output of 80 mW. Each laser will emit at a 1 Hz interval with a 4 µs pulse duration when operating. Each laser diode's emissions are split into four output fibers, each with approximately one quarter of the total power output. The operation of the TAS consists of less than 1% of the AMS-02 operational time. The LFCR boxes are light tight and can not release any laser emissions with the exception of the fiber ports where laser emission are nominal design features. 1.1.1 SVM: Review of design. 1.1.2 SVM: Inspection of as-built hardware. 1.1.1 STATUS: Open 1.1.2 STATUS: Open	
1.2 CONTROL: The laser energy is carried from the LFCR boxes by fibers that interface with the LFCR by way of FC-type connectors. These fibers are routed from the M-structure mounted LFCR boxes to the rim of the outer tracker plate where there are subminiature fiber-fiber connectors. From these connectors the fibers are routed to the beam port boxes (positioned within the tracker at the "top" and "bottom" of the tracker. The connectors are securely held in place and should there be a release of a fiber, either through connector failure or fiber breakage, the NOHD for the laser energy has been established to be 1 inch. The fibers are routed under the MLI of the AMS-02 and are not exposed to the exterior environment. 1.2.1 SVM: Review of design. 1.2.2 SVM: Inspection of as-built hardware. 1.2.3 SVM: Laser Safety Analysis 1.2.1 STATUS: Open	

PAYLOAD FLIGHT HAZARD REPORT	a. NO: AMS-02-F20
b. PAYLOAD Alpha Magnetic Spectrometer-02 (AMS-02)	c. PHASE: II

1.2.2 STATUS: Open
1.2.3 STATUS: Open

2. CAUSE: Loss of Beam Path Containment and Integrity

2.1 CONTROL: The connectors used by the TAS at the LFCR are FC-type and will not inadvertently release. The fiber optics cables are restrained.

2.1.1 SVM: Review of design.
2.1.2 SVM: Inspection of as built hardware.
2.1.1 STATUS: Open
2.1.2 STATUS: Open

2.2 CONTROL: The connectors to make fiber to fiber connections are clamped subminiature fiber connectors. The connectors are attached to Patch Panels at the rim of the tracker plate, restraining the fibers and connectors.

2.2.1 SVM: Review of Design
2.2.2 SVM: Inspection of as built hardware
2.2.1 STATUS: Open
2.2.2 STATUS: Open

2.3 CONTROL: Fibers are fixed within the beamport boxes by use of standard fiber connectors to provide careful alignment with the optics of the beamport boxes.

2.3.1 SVM: Review of Design
2.3.2 SVM: Inspection of as built hardware
2.3.1 STATUS: Open
2.3.2 STATUS: Open

2.4 CONTROL: Fibers that interconnect the LFCR, patch panels and beamport boxes are Corning HI 1060RC type with cladding (0.08mm diameter) and jacket (diameter 0.165 mm). In addition the fibers are “armored” with Nylon (diameter 0.9 mm). Routed fibers are bundled in standard braided installation sleeves and fixed with tie wraps to cable fixation

PAYLOAD FLIGHT HAZARD REPORT	a. NO: AMS-02-F20
b. PAYLOAD Alpha Magnetic Spectrometer-02 (AMS-02)	c. PHASE: II

points. Cable routing considers the minimum bending radius of the individual fibers and bundled fibers, 20 mm and 40 mm respectively.

2.4.1 SVM: Review of Design

2.4.2 SVM: Inspection of as built hardware

2.4.1 STATUS: Open

2.4.2 STATUS: Open

2.5 CONTROL: Laser beams are emitted across the interior of the Tracker. The Tracker is designed to be light tight, and vent ports are specifically designed to preclude the entry and exit of light.

2.5.1 SVM: Review of Design

2.5.2 SVM: Inspection of As Built Hardware

2.5.1 STATUS: Open

2.5.2 STATUS: Open

NOTES:

ACRONYMS	
AMS-02 – Alpha Magnetic Spectrometer	MLI – Multilayer Insulation
ANSI – American National Standards Institute	mm – millimeter
CFC – Carbon Fiber Composite	mW – milliWatt
CW – Continuous Wave	nm – nanometer
Hz – Hertz	NOHD – Nominal Ocular Hazard Distance
LASER – Light Amplification by Stimulated Emission of Radiation	OD – Outer Diameter
LBBX – Laser Beamport Boxes	Si – Silicon
LDDR – Laser Diode DriveR	TAS – Tracker Alignment System
LFCR – Laser Fiber (Fibre) Coupler	TRD – Transition Radiation Detector
LFIB – Laser Fibers (Fibres)	

System Feature	Control Type	Verification method
Laser light sources generated within five light tight boxes exterior to the Tracker, mounted to the M-Frame. Each box contains two lasers diodes that operate at: • 1043 nm • 1 Hertz pulse frequency • 4 nanosecond pulse duration. • 80mW continuous operation power (not an operations mode supported on AMS-02) • 4×10^{-3} Duty Factor	DESIGN	Review of Design Inspection of As Built Hardware
Software control of the laser diodes allows only two diodes to be firing simultaneously	Not Directly Relevant to Safety Controls	Safety Controls provide for control of continuosly powered lasers without threat, an operational mode that can not occur in the AMS-02 TAS Design
Within each laser source box, the emissions from the two laser diodes are split into four beams, each with approximately 20mW of power if the lasers were to be continuously powered. Each of these split beams is guided by a single fiber matched and bundled and taken to a FC-type connector. *Internal optics misalignment or fault results in no laser emission through fiber and contained beam.*	CONTAINMENT	Review of Design Inspection of As Built Hardware
Outside of the box fiber optics cables connected with a FC-type Connectors contain and direct the laser energy, with a single fiber per split beam. All fibers are routed the laser energy from each box to the interior of the Tracker. The fibers are split between the top and bottom of the Tracker and terminate at five beam ports. Each beam port takes the energy from four fibers and directs it along the central axis of the Tracker to illuminate the silicon sensors.	CONTAINMENT	Review of Design Inspection of As Built Hardware
Tracker volume is design to be light tight, including shielded vents that preclude exterior light from entering, or interior laser sources from exiting. Tracker Structure acts as beam stop if misalignment occurs.	CONTAINMENT	Review of Design
Rupture/breakage of fiber path. System is design to minimize the potential for breakage (clad, jacketed and armored fibers that are bundled within a sleeve). Routed under the MLI of the AMS-02. Should a broken fiber be exposed and allowed to emit, the NOHD has been established to be 1 inch.	DESIGN	Review of Design Inspection of As Built Hardware Laser Safety Analysis

Ridge Waveguide Laser

GaAs Semiconductor Laser Diode

Characteristics at T_{amb} 25°C

Parameter	Symbol	Unit	min	typ	max	Measurement Condition
Center Wavelength	λ_C	nm	1070	1080	1090	
Spectral Width (FWHM)	$\Delta\lambda$	nm			1	
Temp. Coeff. of Wavelength	TC_λ	nm / K		0,4		
Output Power	P_{opt}	mW		80		
Slope Efficiency	η_d	W / A	0,5	0,7		
Threshold Current	I_{th}	mA		20	30	
Operational Current @ 80 mW	I_{Op}	mA		100	130	
Cavity Length	l_C	µm		750		
Divergence parallel (FWHM)	$\Theta_{\parallel}$	°		10		
Divergence perpendicular (FWHM)	$\Theta_{\perp}$	°		40		
Polarization				TE		
Mode Structure			Fundamental Mode			

Laser Diode Specifications

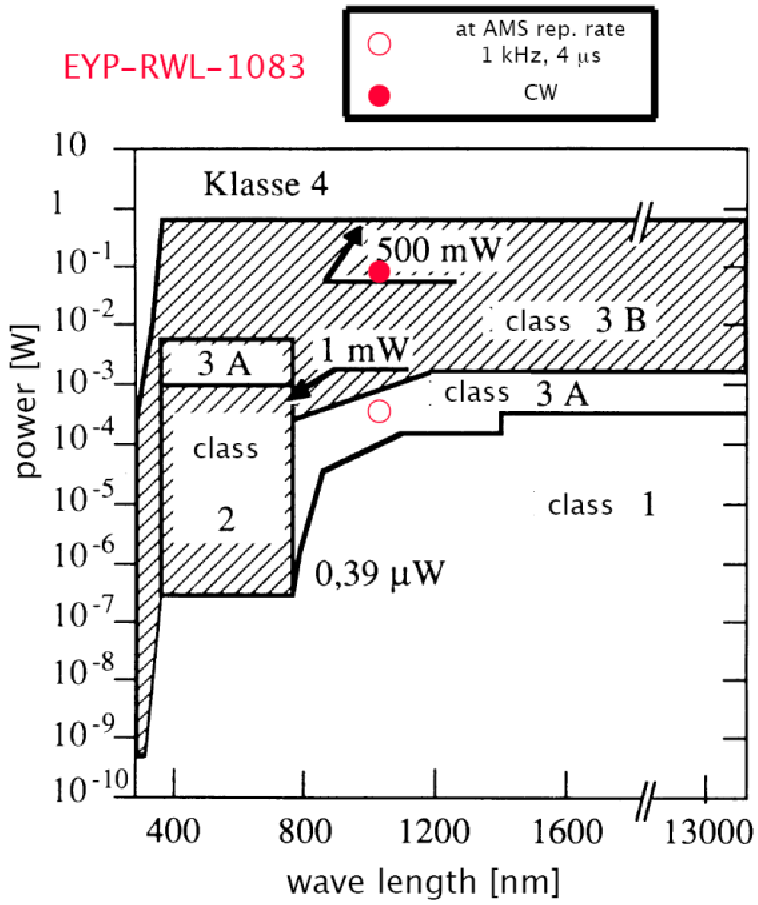

Laser Diode Output Classification (CW and AMS-02 Operational)

GRAPHIC OF VENTING PATHS AND LIGHT TRAP OF AMS-02 Tracker Volume

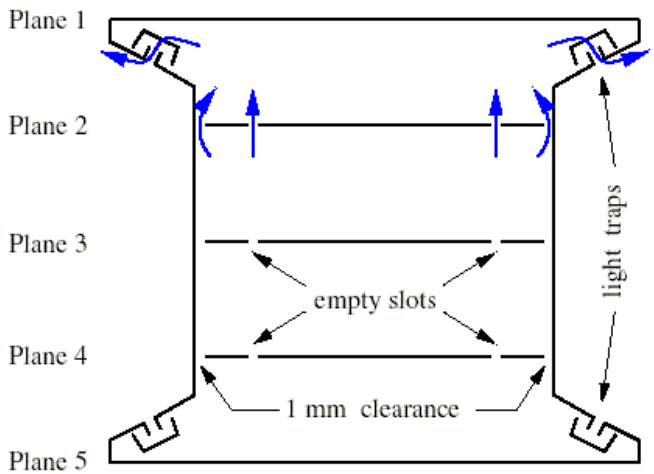

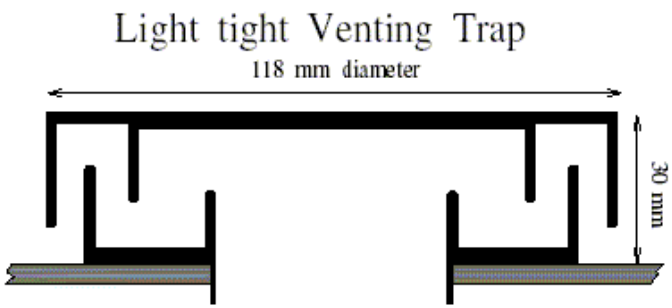

Tracker Volume vents designed to preclude light passage

(Laser path down center of Silicon Sensor Planes, Filter mesh not shown in Tracker Vent Trap)

AMS-02 tracker alignment control system (TAS)

document for
phase II AMS Safety report
MS-word TAS_sysSaf_v2.1 181kB

v2.1 30-Jul-2005

in response to information request #51
of the Phase II action item list
(AMS-02_TIM_Safety_Act#B4F7E.xls)

Author : W. Wallraff AMS-RWTH-Aachen
1.Physikalisches Institut Ib
e-mail wallraff@physik.rwth-aachen.de

0 Document overview

1 The *introduction* describes the purpose and the basic operation principles of TAS
2 The *TAS system components* and their layout are introduced
2.0 *System geometry*
2.1 *Laser beam parameters*
2.2 *Laser beam port box* LBBX
2.3 *Fibres* LFIB
2.4 *Laser fibre coupler* LFCR
2.4.1 Laser diode
2.4.2 diode fibre coupling optics
2.4.3 fibre splitter
2.4.4 optical output connectors
2.4.5 electrical input connectors
2.5 *Laser diode driver* (LDDR in M-Crate)
3 The IR radiation levels *** *updated July 2005* ***
3.1 *TAS Laser power basics*
3.2 *Maximum Permissible Exposure Data* (ANSI Z136.1)
3.3 *Summary MPE*
4 Figures
5 Appendices
5.1 KSC authorization for AMS-01 TAS Laser utilization (1998)
5.2 AMS-01 TAS Laser safety document (1997)

1 Introduction

With the AMS-02 Si-Detector charged particle tracks are traced at 8 space points in a $1m^3$ size B-field to an accuracy of better than 10µm in the most important axis perpendicular to the main component of the field.

The AMS tracker has to cope with a wide range of environmental conditions. Of major concern are the vibrations during the transport before deployment and the rapid periodic changes of the detector temperature due to solar radiation and cooling while in the shadow of Earth.

The Tracker Alignment Control System (TAS) provides optically generated signals in the 8 layers of the Si - Tracker, that mimic straight (infinite rigidity) tracks. It has been shown with AMS-01 [1, 2, 3], that these artificial straight tracks allow to follow up changes of the tracker geometry with a position (angular) accuracy of better than 5 µm (2 µrad).

The AMS approach to Si-tracker alignment control using IR laser beams fulfills the requirements of a space born experiment:

1. Light weight (3 kg)
2. Low power (<100mW peak, ca. 1mW averaged)
3. Proven as being safe in use both on ground and in space
4. Fast, autonomous and low overhead operation (< 1% of tracker running time)
5. Precision exceeding the tracker resolution (8µm) with a small number (<100) of laser shots

The particle tracker and the TAS use the same Si-sensors both for particle detection and alignment beam recording. The TAS can generate position control data within seconds at regular time intervals (4 – 6 / orbit), for example while the ISS flies into the shadow of Earth or coming back into the sunlight.

The realization of the TAS is based on:

1. The experience gained with AMS-01
2. A series of rigorous space qualification (thermal, vacuum, vibration) tests (most at the 1. Physikalisches Institut 1b, RWTH Aachen, Aachen, Germany)
3. The use of space flight compliant components
4. The application of documented space flight compliant working procedures at our manufacturer

2 TAS system components

After an overview of the system geometry (2.0) the description of the TAS starts with the beams (2.1) as they are used for alignment control. This is followed by the optical components (LBBX; 2.2) that deliver the beams into the tracker volume. Then the fibres (LFIB; 2.3) delivering the optical signal to the LBBX are described. We continue with the generation of the optical signal and its coupling into the fibres (LFCR, 2.4). We finish with an overview of the driving electronics (LDDR, 2.5).

2.0 *TAS geometry*

The AMS02 - tracker is equipped with 2 x 10 pairs of alignment control beams (altogether 40, see fig. 1). 2 pairs of alignment beams originate in each of the 5 beam port boxes (LBBX) on both of the outer tracker plates (#1 and #5). Both upward and downward going beams use the same roads defined by the anti-reflective areas on the Si and the cutouts in the ladder cladding (see fig.2).
TAS has 10 laser diodes mounted in pairs inside the Laser fibre couplers (LFCR). The optical output of one laser diode is split equally on four output fibres. The parameters of the driving signals are individually controlled for each diode. While operating in space no more than 2 diodes are operated concurrently.

2.1 *Laser beam parameters*

The wave length (lambda = 1082nm) of these beams has been chosen such as to penetrate all 8 Si detector layers of the tracker at once. At this wavelength only a small fraction (approx. 10% / 300 µm Si) of the generated photons are absorbed. The effective transparency of the Si (approx. 50%) is however dominated by the amount of the surface fraction not covered with Al (traces) for contacting the readout electrodes.

The beams are circular (radius <.7 mm) and have small divergence (ε < 1 mrad). The requirement on parallelism (ϕ < 5 mrad) is set by the diameter of the openings for the roads (7 mm) in the Si ladder shields and the ladder mounting precision.
As we have LBBX on both ends of the roads these are terminated and no IR radiation can directly escape from the tracker volume (for electrical reasons the tracker volume is designed for light tightness such that no scattered IR beams can exit the volume). From layer to layer The signal I_0 is attenuated by a factor of 2 due to the optical properties of the Si, i.e. after 8 layers the remaining intensity will be 4 10^{-3} I_0.
Connected to the driver circuit (LDDR) the lasers can only be pulsed. With the best possible control of all coupling losses the maximum pulse energy per beam (at the LBBX output port) will be 30 nJ. Judging by the experience from recent laboratory tests we expect to run at 8 nJ or less. The Si response is strongly temperature dependent. In consequence we will adjust the diode pulse current at low ambient temperature such that the signal remains sufficient for analysis. Repetition rates are limited by the capacity of the tracker readout system to 1 kHz.

2.2 *Laser beam port boxes* (LBBX's)

The beams enter the tracker volume through the bottom of the beam port boxes LBBX's (see fig. 3) mounted on the outer face of the two outer tracker support plates (see fig. 4). Four (2x2) optical fibres connect to each LBBX. The divergent fibre outputs are collimated by projection optics (parallel to the tracker endplate surface) at each of the 4 input ports. The beams are redirected perpendicularly into the tracker volume by the mirrored surfaces of the 2 quadrilateral prisms at the center of the LBBX (see fig. 3). It is mandatory that the beams remain inside a cylindrical tube of 6 mm diameter and 1 m length centered on each of the output ports.
LBBX bodies are made from standard Aluminum (AlSi1MgMn - AW 6082). Lens- and mirror - holders are fabricated from "German Silver" Cu Ni12 Zn24 (Ns 6512). The manufacturer will provide documentation about the materials used for the lenses and the mirrors (typical transverse dimensions 3mm, typical mass 100mg).
LBBX are fixed into a recess (see fig. 3/4) with 3 M2.5 screws to the upper / lower flange of the tracker (for details see tracker drawings). The weight of a LBBX (without fibres connected) is <40g.

2.3 *Laser fibres* (LFIB's)

The fibres do run from the LBBX's (see fig. 3) to the rim of the tracker plate at (x=0, y= -700), where they are held in small patchpanels (LFIB-P4) holding subminiaturized fibre connectors (see fig. 5 < 5g /connection). At the upper tracker plate (#1) connecting fibres run directly from this transition point to the Laser Fibre Couplers (LFCR). These will have to be installed after tracker insertion into the magnet bore (and TCCS preparations) and before the mounting of the upper ToF-TRD assembly. At the lower tracker plate (#5) the connecting fibres have to be in place before tracker and ACC insertion.
Fibres are of the Corning HI 1060RC type with cladding (diameter 0.08 mm) and jacket (diameter 0.165 mm). They are "armed" with Nylon (diameter 0.9 mm). Beside the subminiature connection at the tracker flange rim we use standard fibre connectors (FC). Vendor specific details will be provided by our manufacturer. For routing fibres (4 – 8) will be bundled in standard braided installation sleeves and fixed with tie wraps to cable fixation points (see fig. 6). The bending radius for individual fibres / fibrebundles must exceed 20 mm / 40 mm. At their LFCR end the LFIB's pass through the MLI enclosure of the TRD.

2.4 *Laser fibre couplers* (LFCR's)

There are 5 Laser fibre couplers (fig. 7) mounted as a block against the lower x=0,-y node of the TRD M-structure (see fig. 6). Each coupler houses 2 diode coupling units and 2 4-fold splitters. The total weight of the 5 couplers is < 1500g. The fixation scheme (4 bolts M3 / LFCR) has been checked by Aachen engineering (report available).
LFCR bodies are made from standard Aluminum (AlSi1MgMn - AW 6082). Lens- and mirror - holders are fabricated from "German Silver" Cu Ni12 Zn24 (Ns 6512). The manufacturer will provide documentation about the materials used for the lenses (typical transverse dimensions 6mm, typical mass 750mg).
All glass parts are enclosed (coupling optics). The fibres including the splitters are cladded and jacketed as all our fibres.

The are several venting pathways (gaps in covers, optical connectors, etc.). During the vacuum test (Aachen, spring 2005) venting speeds will be tested (Vol. < 200 cm^3).

2.4.1 Laser diodes

We use Eagleyard EYP-RWL-1083 Laser diodes with 80mW max. output power. The diodes are mounted in a standard windowed TO-9 package. The driving current is limited to 100mA at typically 2 Volt. This Laser belongs to category 3b (a detailed account of safety aspects is given in section 3).

2.4.2 Diode fibre coupling optics

The coupling optics (fig. 9) adapts the (rotationally asymmetric) diode emission pattern to the acceptance of the signal transporting fibre (core diameter 6.0 µm). In addition to a perfect optics design a reliably adjustable diode position is essential for achieving high (>60%) coupling efficiency. Furthermore optical back-termination is required for preventing diode damage through back-reflection in the fibres. The AMS-02 design by Schäfter & Kirchhoff is derived from the design successfully used with AMS-01 (see appendix 5.2). Besides of intensive tests in Aachen the current design has been used with other (ESA) ISS experiments.

2.4.3 Fibre splitters

The fibre splitters provide a highly stable equipartitioning of the optical output power of a single Laser diode into 4 outputs. The splitters are delicate in handling. Therefore they have been incorporated into the LFCR. Both input and output lines of the splitters are coiled up (see cylindrical part in the center of fig. 7) and fixed to the body of the LFCR

2.4.4 Optical output connectors

The splitters end in FC type optical feedthroughs (fig. 8/9). There will be fibres (LFIB) connected to each of the 8 output connectors.
The maximum output energy per connector per pulse will be 55 nJ (in order to be able to deliver 32 nJ in spite of the unavoidable coupling losses between the LFCR output and the LBBX output).

2.4.5 Electrical input connectors

The switched diode driving current comes come from the laser diode driver (LDDR, fig.10) housed in the M-crate. The connector will use the standard d-sub 9 format

2.5 *Laser Diode Drivers* (LDDR's)

The Laser diodes are driven from a pulsed current source specifically designed to suppress spikes in the driving current. The pulse width can be set in steps of 0.5 µs from 0.5 µs to 8.0 µs. Rise/fall time are typically 60 ns. The output current (<200 mA) can be set with 8 bit resolution. All Control is through the USCM's via the M-crate backplane. The development of the LDDR [4] is approaching the construction of a set qualification modules (see fig.10). The M-crate houses 5 LDDR's (2 current sources each) serving the 5 LFCR's. The output cables run from the front panels of the LDDR's to the LFCR's mounted on the M-structure carrying the TRD. These cables have to pass the MLI of the TRD.

3 *The IR radiation levels*

3.1. TAS laser power basics

1. The LFCR diode *EYP-RWL-1083* operated at the maximum(tracker DAQ) LDDR setting delivers an average power of

P_{avg} = P_{CW} • duty factor

= 80 • 10^{-3} W • 8 • 10^{-3} (4 • 10^{-3}) = 400 (200) µW

duty $factor_{max}$ = rep rate • pulse length = 1000 s^{-1} • 8 10^{-6} s = 8 • 10^{-3}
(duty $factor_{DAQ}$ = rep rate • pulse length = 1000 s^{-1} • 4 10^{-6} s = 4 • 10^{-3})

max. pulse energy at diode window:

w_{pulse} = P_{avg} / rep rate = 400 nJ

max. pulse energy at a single LBBX output (1 laser diode feeds 4 beams on different LBBX):

w_{beam} = w_{pulse} • $\eta_{coupler}$ • $\eta_{splitter}$/ 4 • η_{FC} • η_{FC} • η_{LBBX}
= 400 nJ • 0.6 • 0.9/4 • 0.85 • 0.85 • 0.8 = 31.2 nJ

with η_i being the transfer efficiency at the various transitions in the light transport system (FC connector, LBBX beamport, etc.., these values can be achieved with careful adjustments, but they are somewhat smaller than the theoretical limits)

In ANSI Z136.1-2000 the power limits for a class 3b laser (see tables A1, A2 from that document) are defined as follows (see tables 1, 2):

a) P_{CW} (1.05µm < λ < 1.40µm) ≤ 125 • 10^{-3} W
b) P_{avg} (1.05µm < λ < 1.15µm) ≤ 500 • 10^{-3} W
c) w_{pulse} (1.05µm < λ < 1.4µm) ≤ 125 • 10^{-3} J

Hence the design safety factor of TAS at the beamport (LBBX) output is :

d) w_{pulse}^{limit}/ w_{beam} = 125 • 10^{-3}/31.2 • 10^{-9} = 4 • 10^{6}

2. general position measurement related laser power aspects:

The pulse length for alignment runs in space will be adapted to the tracker readout integration time (3 – 4µs) hence shorter than the maximum possible (8 µs) from the LDDR. For example the generation of a 22 mip equivalent signal in the AMS Si plane 1(8) (farthest from the LBBX on plate 5 (1)) requires an energy of approximately 15 nJ out of the beamport. Since the laser beam is ca. 1.4 mm in diameter the maximum signal strip then receives approximately 2.5(5) mips on the y (x) side.
Far above the read out noise the position measurement precision is proportional to the square root of the product of the pulse energy w_{pulse} and the number of pulses n_p . In consequence the alignment pulse energy can be traded with the number of pulses n_p observed.

3.2. Maximum Permissible Exposure data

(adapted from ANSI Z136.1,
see example 11 in appendix B3 of the 2000 edition as well as
examples 4, 19 in the appendix of the 1993 edition)

1. (see ANSI Z.136.1-2000, tables 5a, 6; figs 4, 8a,
for **1083nm** pulses of ≤ **4µs** duration with **1 kHz** rep. rate ,
the **AMS02** case)

(repetitive pulse limit Eq. B10)
MPE / Pulse = $n^{-1/4}$ • 5 • C_C • 10^{-6} J / cm^2
= **0.5 µJ / cm^2**

(1). n = *f* • T = 1000 s^{-1} • 10 s = 10^4
(2). C_C = 1 (see table 6)

2. **MPE(cumulative)** = n • MPE/pulse
= **5 mJ / cm^2**

3. average radiance = MPE(cumulative)/T
= 0.5 mW / cm^2

4. estimated **N**ominal **H**azard **Z**ones
(**N**ominal **O**cular **H**azard **D**istance, minimum distance for safe working)

(1). direct viewing

(a). at a LBBX output
(see fig. 1,
ε_{LBBX} = 1mrad divergence, a_{LBBX} = 1.4 mm diameter)
r_{NOHD} = [(1.27 • w_{beam} / (**MPE / Pulse**) - a_{LBBX}^2)$^{1/2}$] / ε_{LBBX}
= [(1.27 • 0.031 µJ / (**0.5**µJ/cm^2) - 0.14^2)$^{1/2}$] / 10^{-3}
= 2.43 m

(b). from an open LFCR output (or broken LFIB)
(see fibre specs,
ε_{LFIB} = 0.15 rad divergence, a_{LFIB} = 0.006 mm diameter)
r_{NOHD} = [(1.27 • w_{pulse} / (**MPE / Pulse**) - a_{LFIB}^2)$^{1/2}$] / ε_{LFIB}
= [(1.27 • 0.4 µJ • 0.6 • 0.9/4 / (**0.5**µJ/cm^2) - 0.0006^2)$^{1/2}$] / 0.15
= 2.5 cm

(c). at the diode window
(see fig 1 and diode specs,
ε_{diode} = 0.5 rad divergence, a_{diode} = 0.020 mm diameter)
r_{NOHD} = [(1.27 • w_{pulse} / (**MPE / Pulse**) - a_{diode}^2)$^{1/2}$] / ε_{diode}
= [(1.27 • 0.4 µJ / (**0.5**µJ/cm^2) - 0.002^2)$^{1/2}$] / 0.5
= 2.0 cm

3.3. Summary Maximum Permissible Exposure data

The data shown in the preceding subsections do clearly demonstrate that AMS TAS power levels are far below the limiting levels imposed by ANSI Z.136.1 (see 3.1.1.d).
The TAS IR radiation is completely contained under all conceivable circumstances. The system is designed such that it is gracefully degrading even in cases were sub-components are destroyed (broken fibres etc.) during handling in the shuttle or on ISS.
Furthermore TAS is generally active for only 1% of the AMS data-taking.
The highest power densities occur in the tracker volume itself (see 3.2.4.1.a), which is a closed light tight inaccessible sub-volume of the AMS-02 experiment. At these small direct viewing power levels we have not evaluated the indirect (i.e. reflected) intensities.
Each of the LBBX that deliver the IR beams is controlled separately and its output is monitored by the signals from the Si-detectors, so the proper function of this component is permanently checked.
Due to the optical properties of our fibres there is no risk in case of a fibre rupture beyond the limits of a tiny keep out zone (see 3.2.4.1.b) with radius $r_{NOHD} \approx 1$inch.

References

1 J. Vandenhirtz et al. Space flight experience with the AMS infrared tracker alignment system, Proceedings of the 27th International Cosmic Ray Conference, (ICRC2001), Hamburg , Germany, 2001, Vol.5, session OG, pp 2197-2200 (paper icc 1574) (http://www.copernicus.org/icrc/papers/icc1574_p.pdf)

2 W. Wallraff et al. The AMS Infrared Tracker Alignment Sytem – From STS91 to ISS, 7th International Conferenceon Advanced Technology and Particle Physics, (ICATPP-7), Villa Olmo Como Italy 2001, M. Barone et al. (Eds.), World Scientific, Singapore 2002, ISBN 981-238-180-5. pp. 149-153 (http://nss2000.mi.infn.it/Manuscript/5_tracking/Wallraff.pdf)

3 J. Vandenhirtz, Ein Infrarot Laser Positions-Kontroll-System für das AMS Experiment, 2001 PhD thesis, RWTH-Aachen (http://sylvester.bth.rwth-aachen.de/dissertationen/2002/137/02_137.pdf)

4 A. Gross, AMSII Laser Driver, LDDR v: 4.0, Sep.2004 RWTH-Aachen 1. Physikalisches Institut 1b, electronics development (gross@physik.rwth-aachen.de)

4 *Figures*

Figure Captions

Fig. 1 AMS-02 Tracker Alignment System, basic components, see text for details.
- a) LFCR laser fibre couplers (5, mounted on the TDR M-frame). Each coupler holds 2 diodes for 8 fibres. Diodes are driven by pulsed current sources on the LDDR boards located in the M-crate
- b) LFIB fibers carry the optical signals (40) to the beamport boxes LBBX (5 on the upper(# 1), 5 on the lower tracker plate (# 5). The 20 laser beams from above use the same roads as those from below. For simplicity only part of the Si sensors are shown.
- c) Surface micrograph of an AMS AR (antireflective) Si sensors at the Laser impact point. The improved transparency due to the coating makes the implantations inside the Si visible..

Fig. 2 Laser beam roads superimposed on the the tracker Si-ladders of the two lowermost tracker plates

Fig. 3 Beam port box LBBX basic design (Al), shown are:
- a) Cut through the beamport channels in the outer tracker plate (lower left). Fibres arrive parallel to the plate surface and end with a ferule clamped into a german silver sleeve that holds the projection optics. The IR beams are redirected into the tracker volume by quadrilateral prisms mounted into the side walls of the LBBX (the rotation angle of the prism can be adjusted).
- b) Center left: LBBX seen from below (side towards the tracker plate). The beam holes are 10.5(6.75) mm apart in x(y). At most 1 of the 2 beams in each channel is fired in one run.
- c) Upper left : cut through the LBX at the level of the incoming fibres.
- d) Cut through 2 of the 3 fixation channels (lower right). The cut out in the carbon fibre sheets of the tracker plate is sealed with a CFC pocket piece ("baignoire", see fig. 4)
- e) Center right: view of the LBBX from above. The inner dimensions of the "baignoire" are indicated. LBBX carry alignment marks for survey.

Fig. 4 beam port box LBBX prototype onto tracker plate simulator with "baignoire" glued into the surface cutout.

Fig. 5 View of the Vacuum Container (VC) together with the M structure of the TRD. Also indicated are the upper frames of the electronics crates (not up to date, for orientation purposes only). The 5 LDDR's (Laser diode drivers) are located in the M-crate. The electrical output lines (10) run to the 5 LFCR's grouped together at the lower x=0, -y node of the TRD. From there 40 LFIB's (optical fibres) are strung to the outer plates of the tracker at x=0, -y location. The 20 fibres serving the lower tracker are run in between the ACC and the VC.

Fig.6 Subminiature fibre fibre connection (to be mounted at the rim of the outer tracker plate)

Fig.7 Laser fibre coupler (LFCR) box with 2 electro optical systems: view from above (b, lower part), view from the side (a, upper part), for more details and further views see fig 8. Fibres and splitters are shown in red. Optical outputs via FC connectors are seen on the right, electrical control signals are delivered from the left. For details see text.

Fig. 8 LFCR, detailed views, for example: fixation holes to rails on the M-structure, lower panel center.

Fig. 9 Diode fibre coupler over all dimensions and interface surfaces, on the right: Laser diode in TO-9 housing, on the left: angled fibre output (for minimizing back reflections), lens fixations and adjustment elements not shown. IR rays in red.

5 *Appendices* (file KSC&LASSAF_AMS1a.pdf)

In order to help engineers unfamiliar with AMS Laser use in understanding the background of IR Laser use at AMS-02 we have joined 2 of the essential documents exchanged between the collaboration and NASA in 1997/8

5.1 NASA Laser use authorization for AMS-01 (pages KSC1 – KSC3) , issued Feb. 18 1998 at KSC 15 weeks before STS-91 lift-off.

5.2 AMS-01 Laser system description,

outline of laser based procedures,
ground support equipment for work at KSC,
authorization requests for potential Laser operators,

dated Sep. 4 1997, submitted 17 weeks after feasibility had been proven and 6 weeks before AMS-01 TAS was installed at ETH Zürich (pages AMS01_1 – AMS01_28)

Figures not republished with new assessment to ANSI Z 136.1 (2000) Previously published figures referenced.

Those figures are provided in the following pages

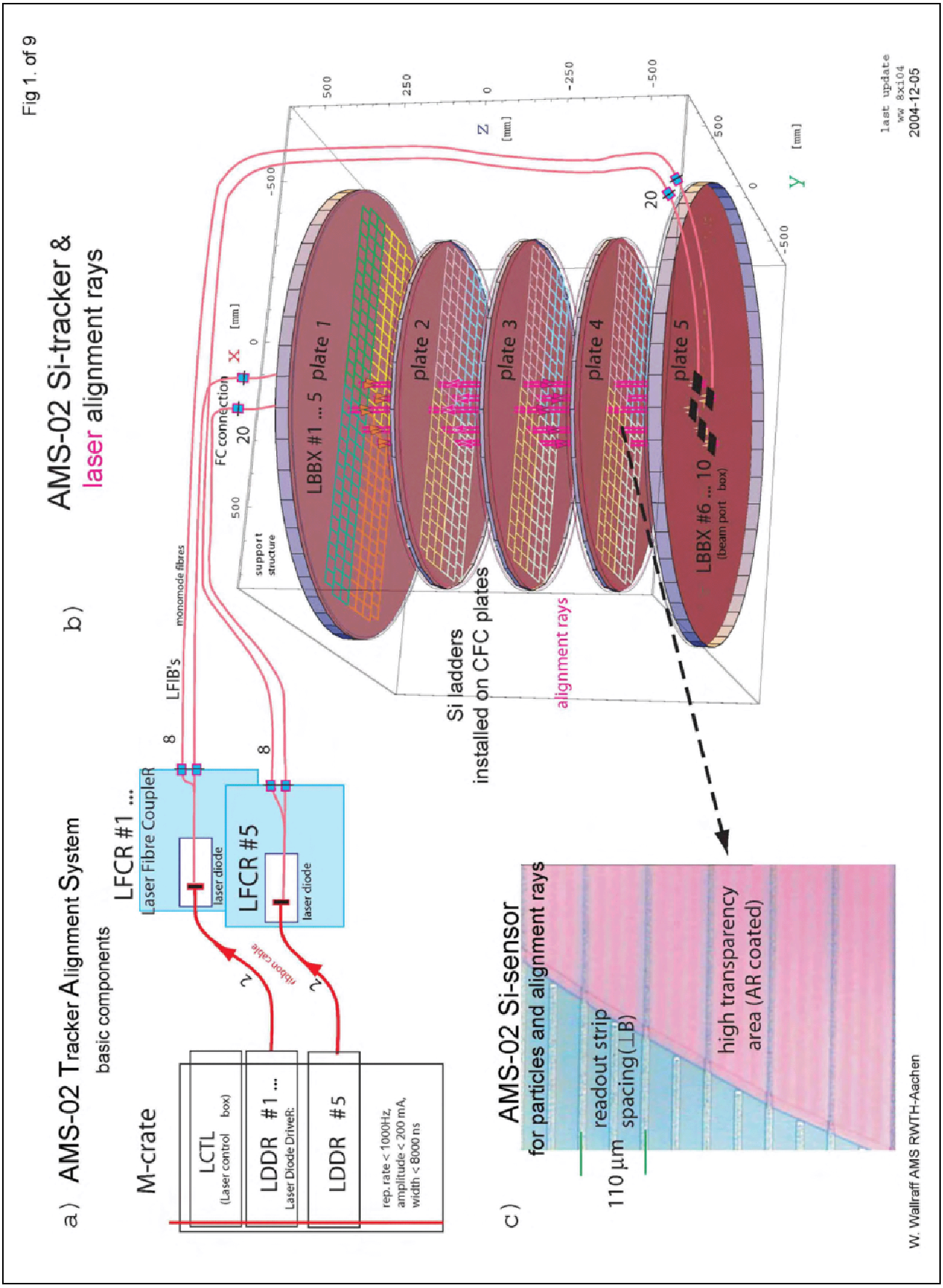
Fig 1. of 9
a) AMS-02 Tracker Alignment System
basic components
M-crate
LCTL
(Laser control box)
LDDR #1 ...
Laser Diode Driver
LDDR #5
rep. rate < 1000Hz,
amplitude < 200 mA,
width < 8000 ns
ribbon cable
LFCR #1 ...
Laser Fibre Coupler
laser diode
LFCR #5
laser diode
8
LFIB's
monomode fibres
b)
AMS-02 Si-tracker &
laser alignment rays
FC connection
20
X [mm]
support structure
LBBX #1 ... 5 plate 1
plate 2
plate 3
plate 4
plate 5
LBBX #6 ... 10
(beam port box)
Si ladders
installed on CFC plates
alignment rays
Z [mm]
Y [mm]
last update
ww 8xi04
2004-12-05
c)
AMS-02 Si-sensor
for particles and alignment rays
readout strip
spacing(⊥B)
110 µm
high transparency
area (AR coated)
W. Wallraff AMS RWTH-Aachen

Fig. 2 of 9
Si Geometry AMS-02 with
alignment rays fired from beamports LBBX #n
or
layer 8 (on plate 5)
layer 6 (on plate 4)
#8
#7
#6
#9
#10
y
200
100
0
-100
-200
-400
-200
0
200
400
x
Si upward facing
ladders layer 8 (stiffeners for y>0, K7 Kapton for center 7 rows)
seen through layer 6 (K5 Kapton for center 6 rows)
from SnsrsTiling_20.2.nb by ww @ MacOS 1 macwalll 3/7/01 09:41
2004-12-05
W. Wallraff AMS RWTH-AAchen

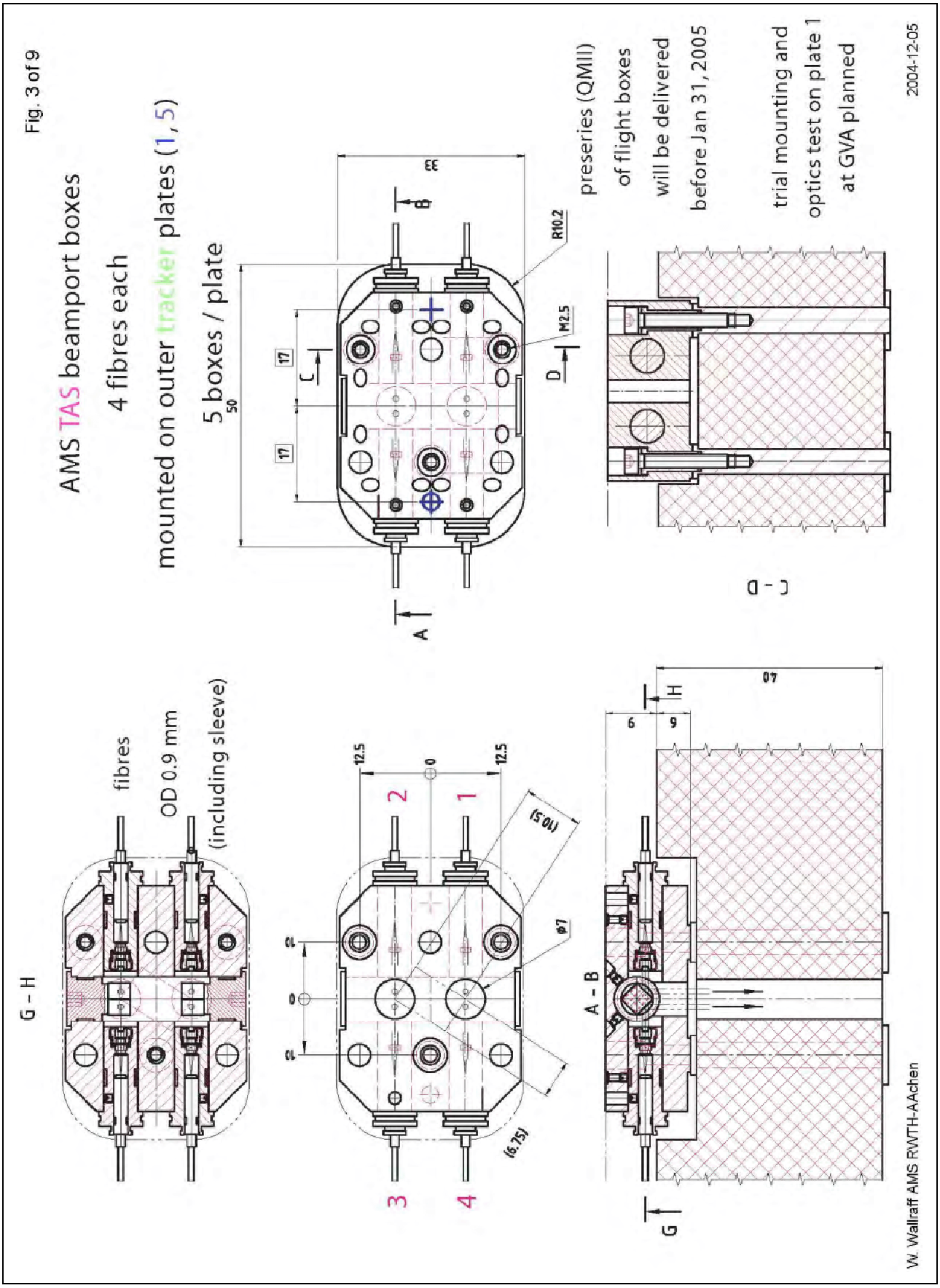
Fig. 3 of 9
AMS TAS beamport boxes
4 fibres each
mounted on outer tracker plates (1, 5)
5 boxes / plate
preseries (QMII)
of flight boxes
will be delivered
before Jan 31, 2005
trial mounting and
optics test on plate 1
at GVA planned
2004-12-05
G - H
fibres
OD 0.9 mm
(including sleeve)
A - B
C - D
W. Wallraff AMS RWTH-AAchen

Beamport box (without optics) mounted in a CFC pocket in plate 1 (specimen)

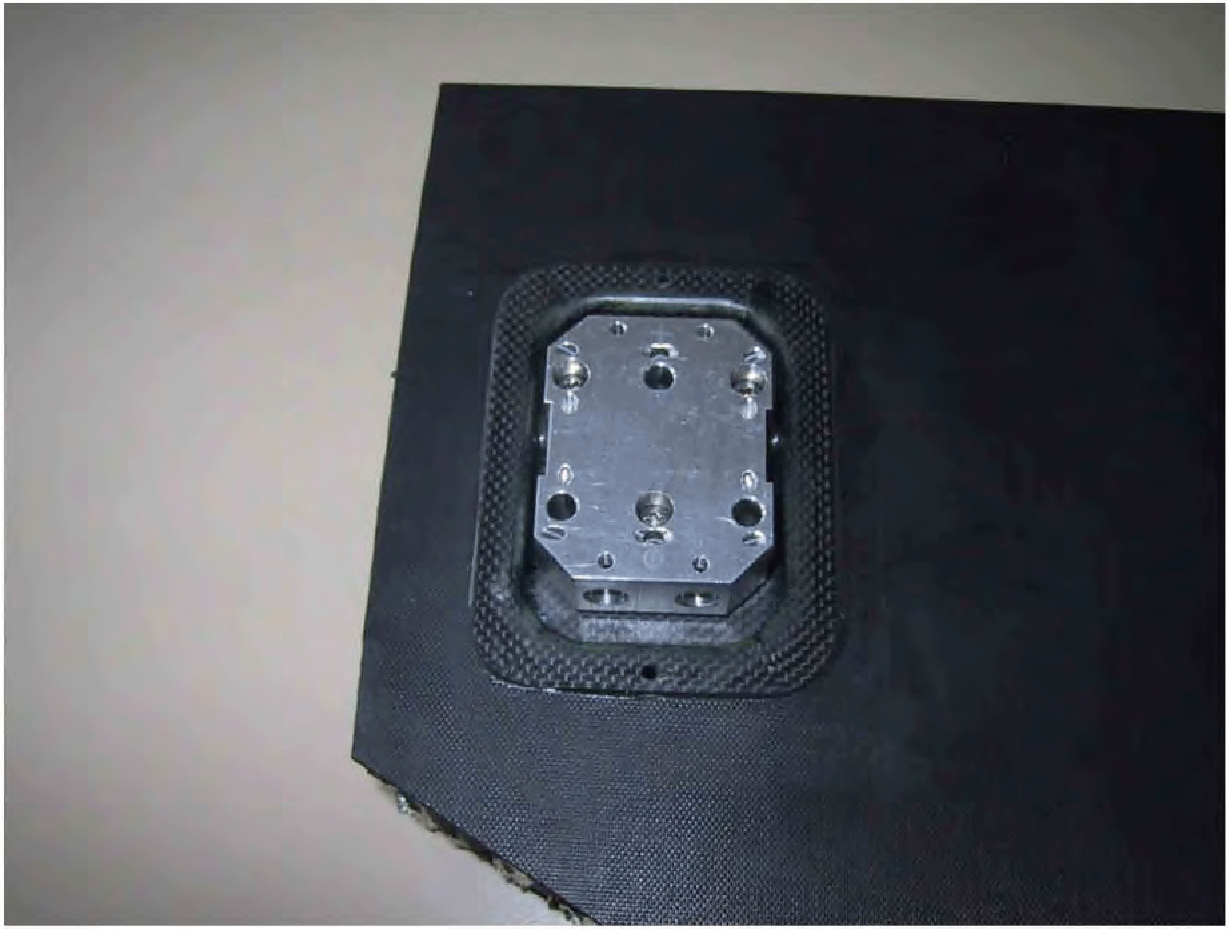

W. Wallraff AMS RWTH-AAchen

2004-12-05

Fig. 5 of 9

TAS LFCR's will be mounted on the lower -y beam of the TRD M-structure (inside MLI):

well stabilized thermal environment, reasonably close to LDDR's in M-crate, not too difficult access to tracker plate 1(5)

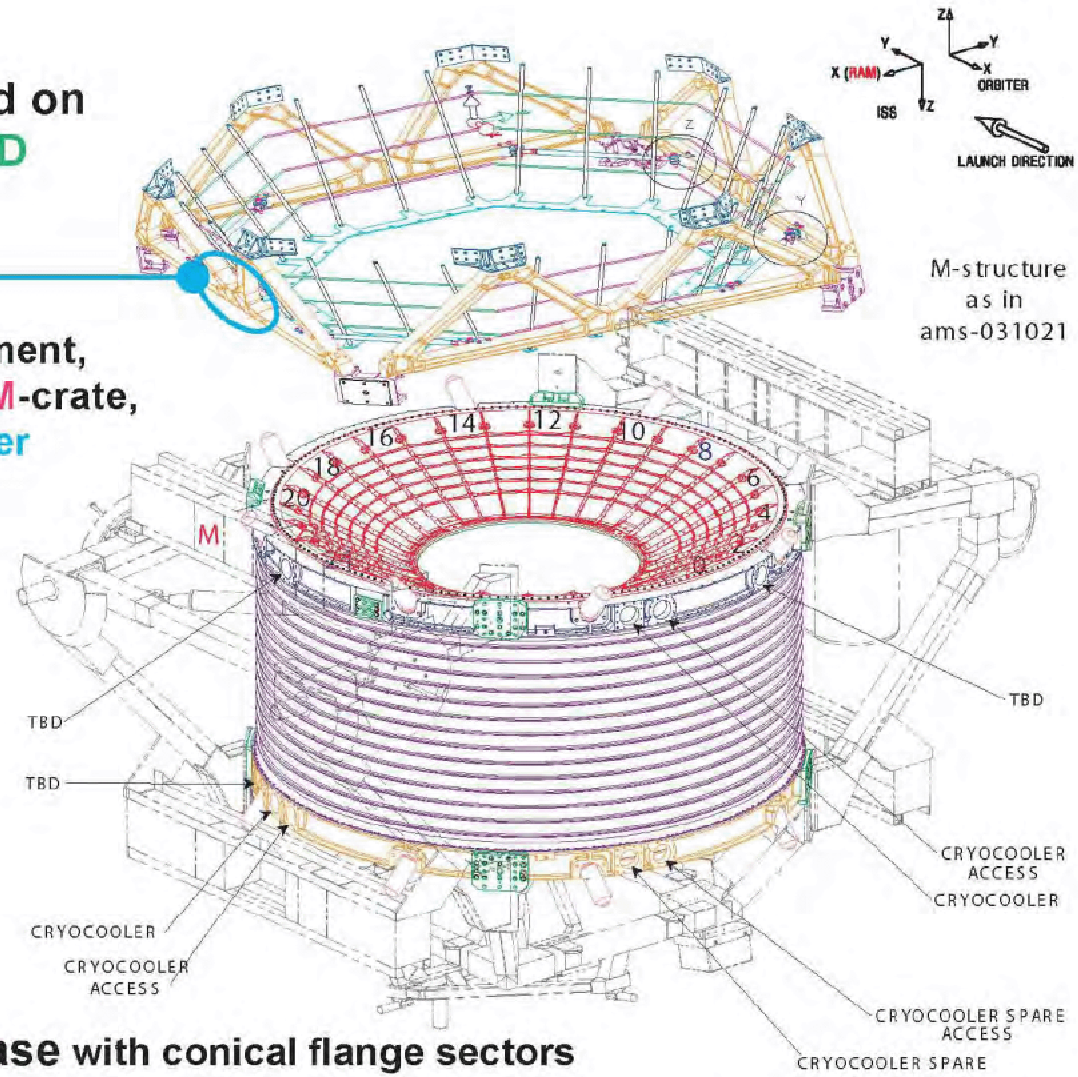

Vacuum Case with conical flange sectors

used for ACC PMT's

VC Port locations ÐBack ISO View

W. Wallraff AMS RWTH-AAchen

2004-12-05

Fig. 6 of 9

AMS TAS LFIB's
subminiature fibre to **fibre connector**
with **0.5** μ**m positioning accuracy** at the **fibre joint**

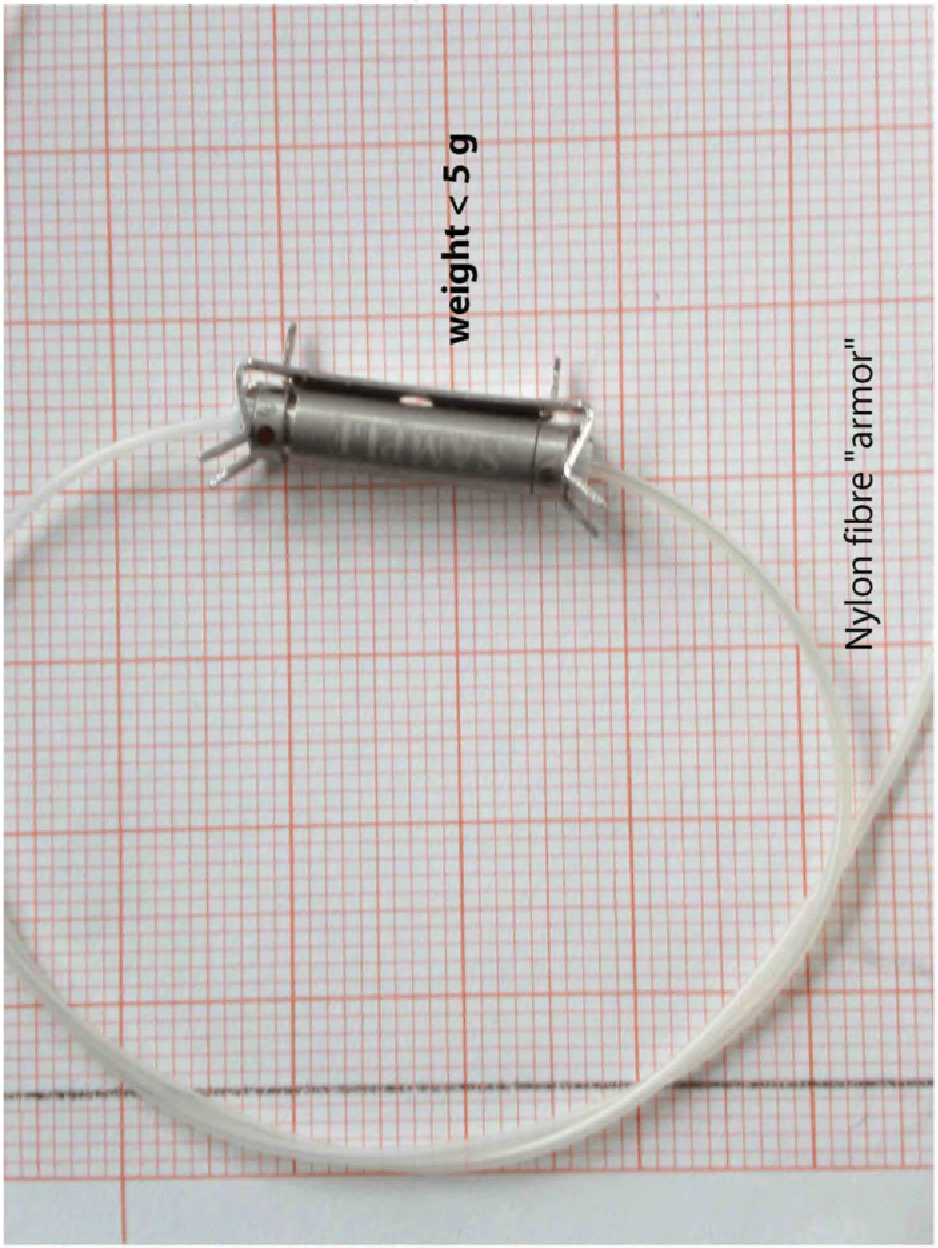

2004-12-05

W. Wallraff AMS RWTH-AAchen

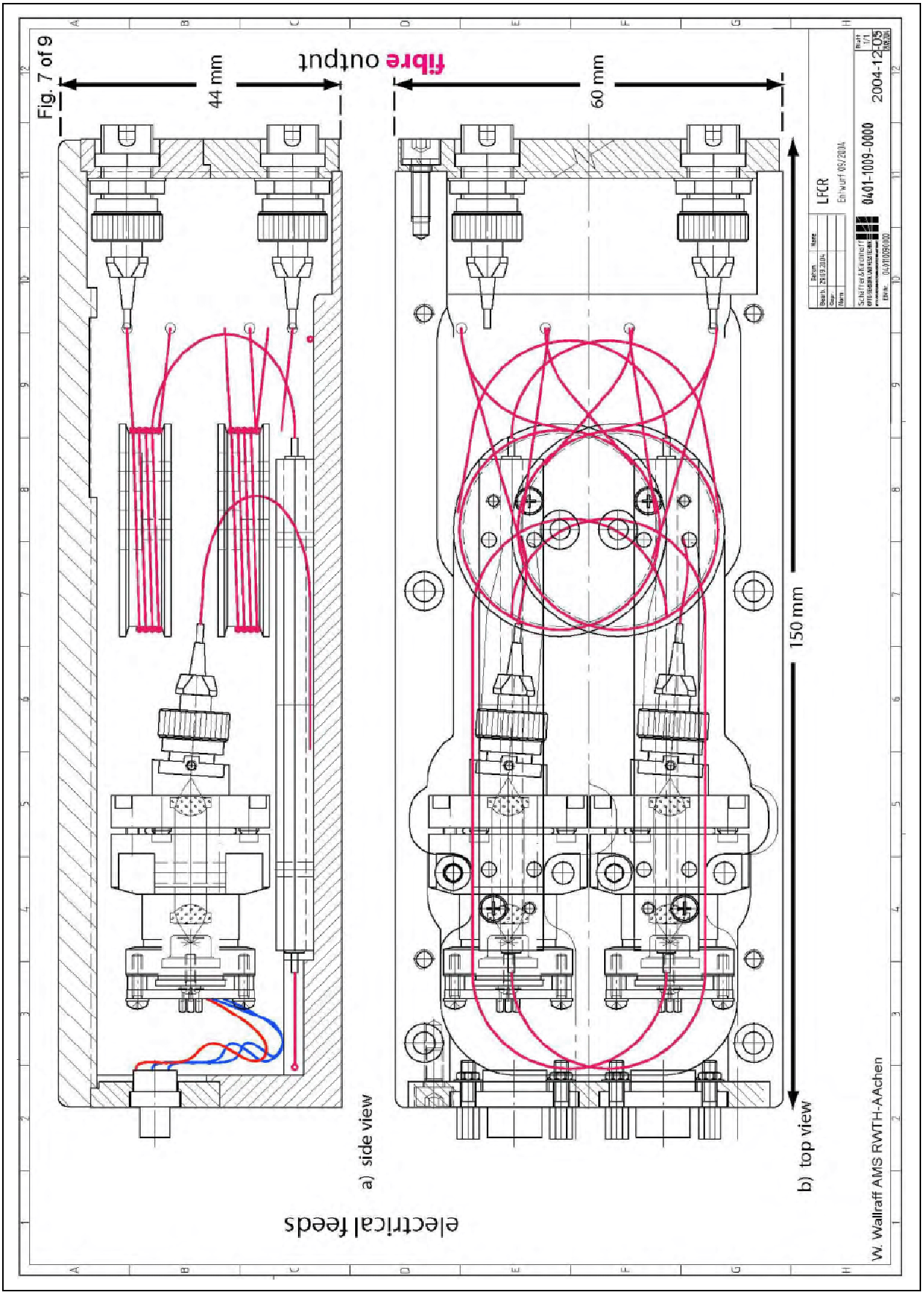
Fig. 7 of 9
44 mm
fibre output
60 mm
150 mm
a) side view
b) top view
electrical feeds
W. Wallraff AMS RWTH-AAchen
LFCR
0401-1009-0000
2004-12-05

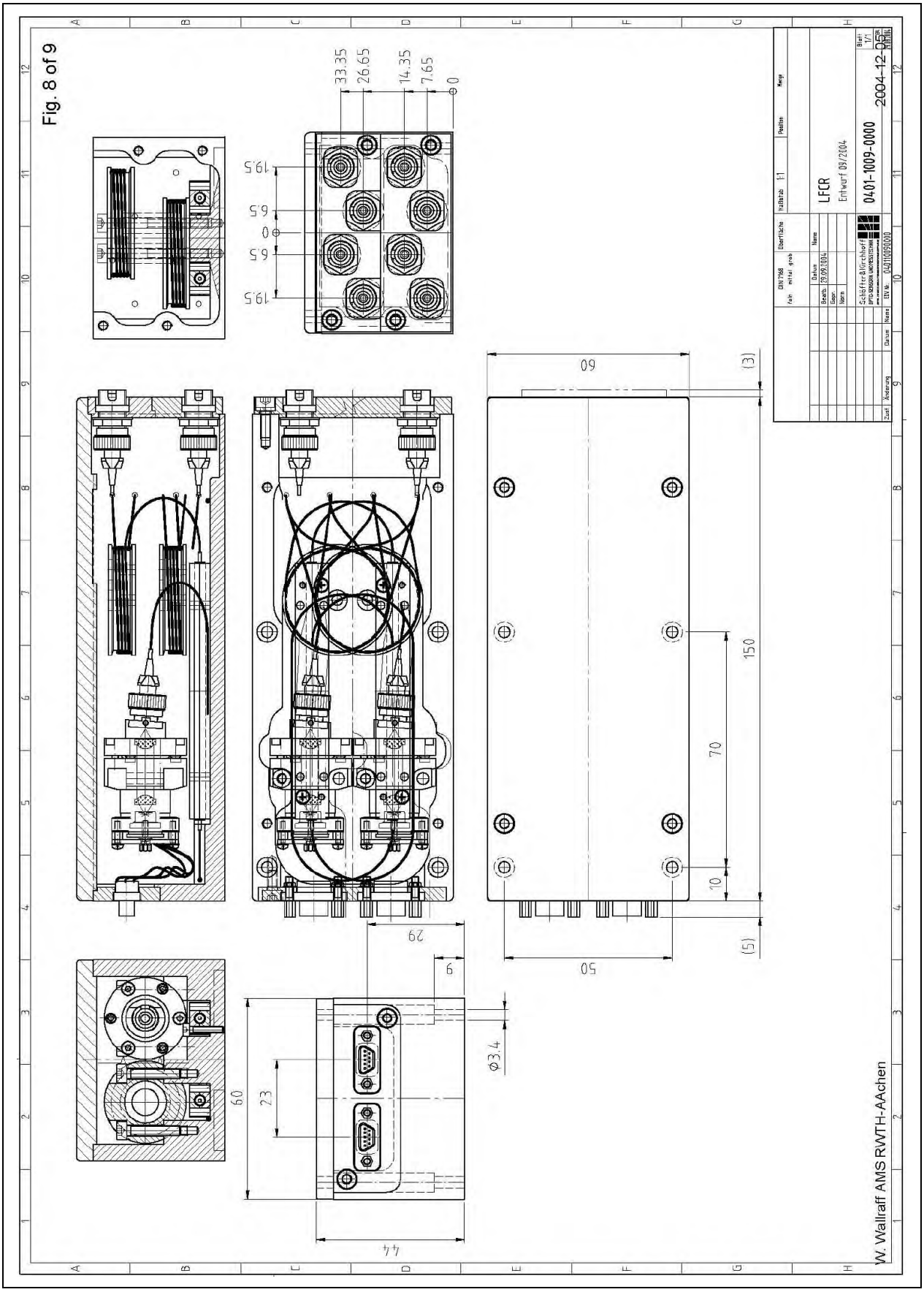
Fig. 8 of 9
33.35
26.65
14.35
7.65
0
19.5
6.5
0
6.5
19.5
60
(3)
150
70
10
(5)
50
29
9
Ø3.4
60
23
44
LFCR
Entwurf 09/2004
0401-1009-0000
2004-12-05
W. Wallraff AMS RWTH-AAchen

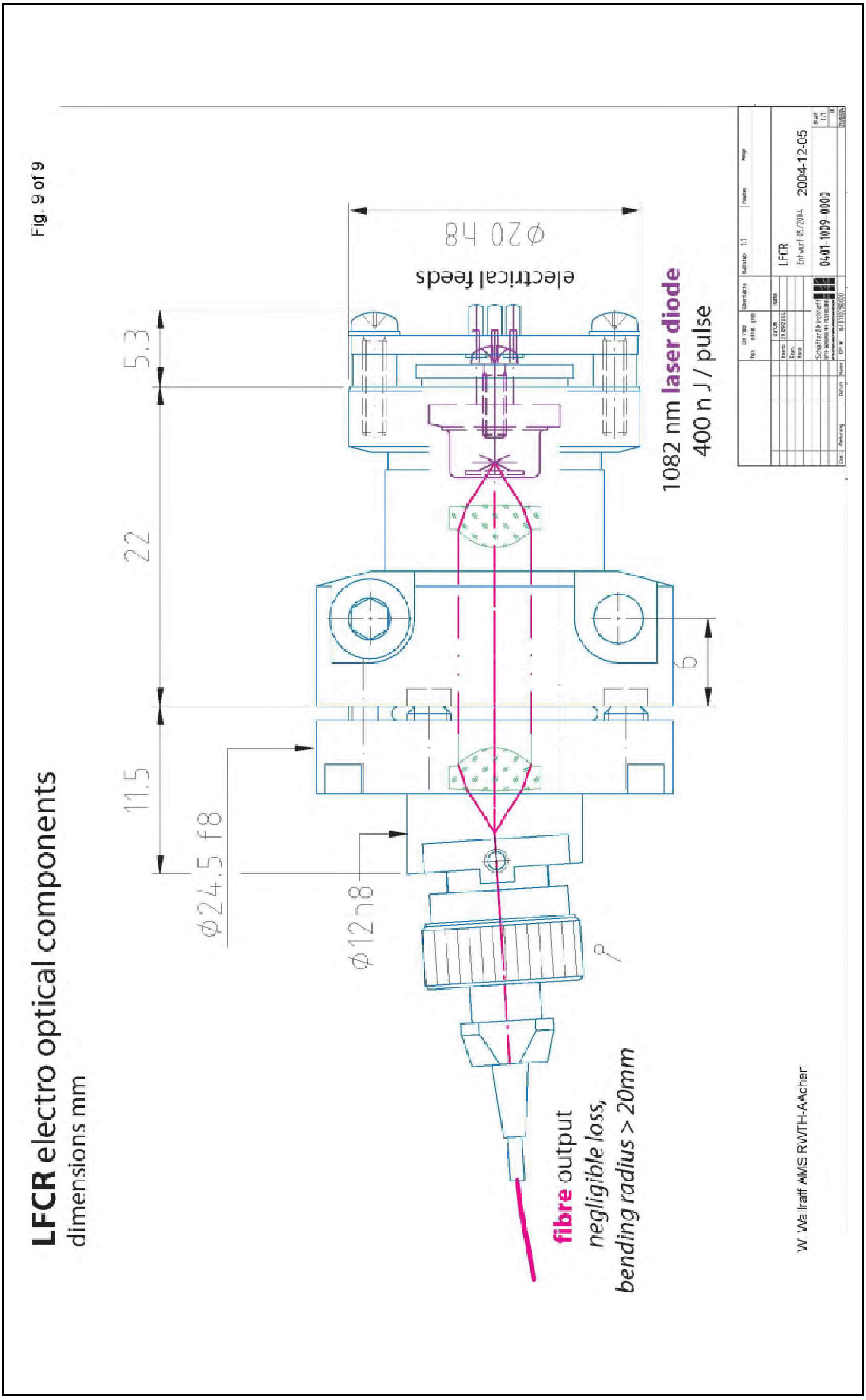
Fig. 9 of 9
LFCR electro optical components
dimensions mm
5.3
22
11.5
ϕ24.5 f8
ϕ12h8
ϕ20 h8
electrical feeds
6
1082 nm laser diode
400 n J / pulse
fibre output
negligible loss,
bending radius > 20mm
W. Wallraff AMS RWTH-AAchen
LFCR
2004-12-05
0401-1009-0000