ISS: 108x80m 420T 86KW 400km AMS: 3x3x3m 7T 2KW 3+ years

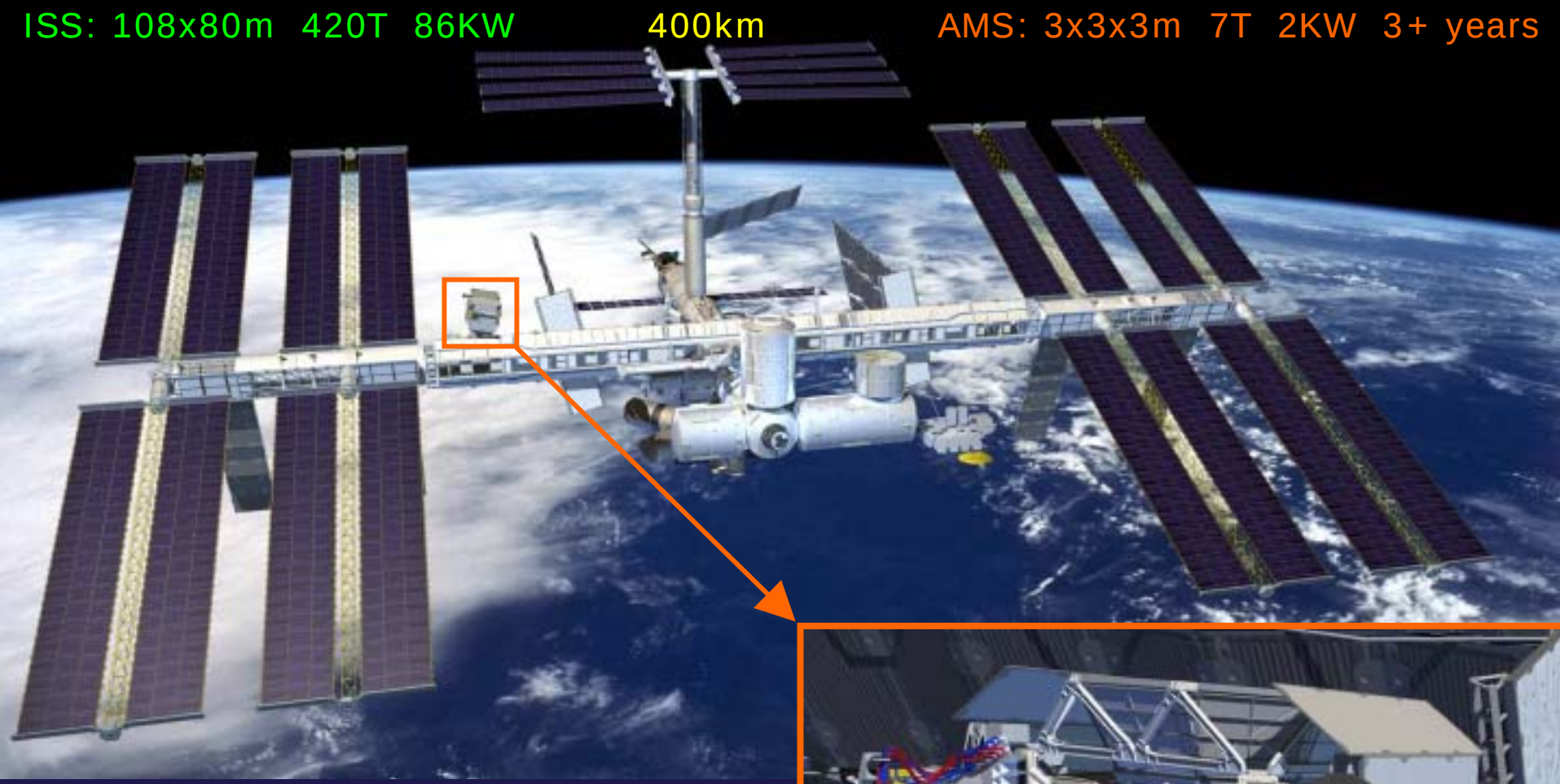

AMS-02 Activation

AMS Thermal CDR

Carlo Gavazzi Space, Milano - 9 Mar 2004

Mike Capell

Senior Research Scientist

AMS as 12 Functional Blocks

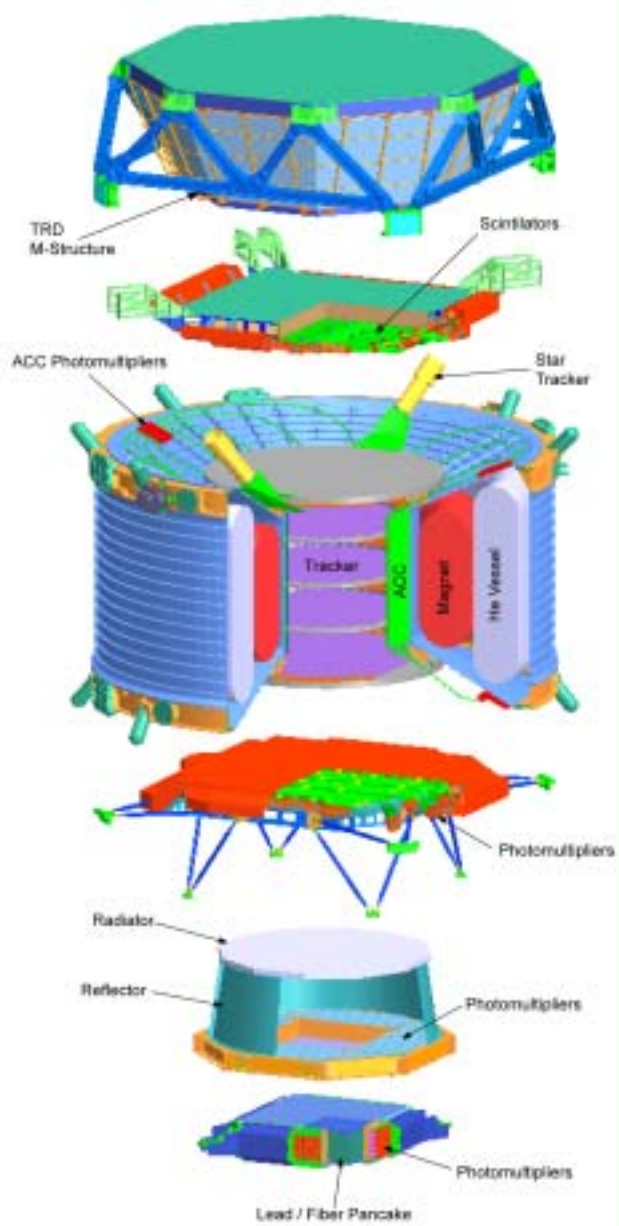

1. Cryomagnet
2. Cryocoolers
3. ECal
4. Monitoring (Misc.)
5. RICH
6. Scintillators
7. Silicon Tracker
8. TRD
9. PDS
10. “J”: DAQ & Trigger
11. Thermal Control System
12. USS & Integration H/W

1. Cryomagnet - “C”

a. Things inside the Vacuum Case
   Coils, He Tank (Dewar), Cold Valves, etc
b. CAB: external electronics
c. CAB 120V heater
d. Charge & Discharge Cabling
e. UPS (qty=2)
f. CDDP, CDDS: Dump Diodes
g. CVB: Cryo(warm) Valve Box
   & Warm He Supply
h. Interconnecting Cabling
i. Interconnecting Plumbing

2. Cryocoolers - "CC"

a. Cryocoolers themselves (qty=4)
b. Body (substitution) Heaters each cc
c. ¼ Zenith Radiator Panel 1/cc
d. CPL between the above, 1/cc
e. Zenith Heaters, 1/cc
f. Thermal Sensors (PTS) on panels
g. Magnetic Field Sensors
   mounted on tracker thermal bars *(moved from M-)*
h. CCEB containing electronics & PS
i. Interconnecting Cabling

3. ECal – Electromagnetic Calorimeter - "E"

a. Calorimeter, Support, Radiators
b. EIB electronics+PMTs around sides
c. Dallas Temp Sensors (DTS) needed for "physics" on above
d. E-Crates (qty=2 "½"): readout elect.
e. EHV (qty=6, 2/ ½): HV Bricks
f. 120V Heaters for the above
g. ErPD (qty=2, 1/ ½): Power Supplies
h. Interconnecting Cabling

4. Monitoring (miscellaneous) subsystems - "M" - 1/3

Amica Star Tracker (AST)

a. Cameras, attached elect. (qty=2)
b. Baffles, 1/camera
c. Control & readout elect in M-Crate
d. Interconnecting Cabling

GPS

e. GPS box mounted on radiator
f. Antenna(e) mounted on USS
g. Readout board in M-Crate
h. Interconnecting Cabling

4. Monitoring (miscellaneous) subsystems - "M" - 2/3

(Tracker) Laser Alignment System

i. LBBX: beamport boxes (qty=10)

   mounted in tracker planes

j. LFCR: diode boxes near TRD (qty=5)

k. LFIB: Interconnecting fibers

l. Electronics in M-Crate

m. Interconnecting Cabling

4. Monitoring (miscellaneous) subsystems - "M" - 4/4

M-Crate + MPD

n. M-Crate boards for AST, GPS, LAS

o. tMPD Power Supplies for above

p. DTS & readout for above

q. Interconnecting Cabling

r. DTS readout for other items as part of Global Temp Sensor Net (GTSN)

s. DTS readout for other items, subdetector specific (for "physics")

5. RICH – Ring Imaging Cherenkov - "R"

a. "Radiator", reflector, image plane grids, thermal radiators, shielding
b. RFE electronics+PMTs underneath
c. Electronics around edge (RLVPP, RCDP, JINR)
d. DTS on above, for "physics"
e. RHV (qty=4, 2/ ½): HV Bricks
f. 120V Heaters for the above
g. eRPD (qty=2, 1/ ½): Power Supplies
h. DTS on above for GTSN
i. Interconnecting Cabling

6. Scintillators - "S"

Time of Flight

a. Upper and Lower double planes
b. Electronics+PMT around edge, DTS

Anticoincidence Counters

c. Paddles inside Magnet
d. Electronics+PMTs on V/C flange

External Electronics

e. S-Crates (qty=4 "¼")
f. SHV(qty=4, 1/ ¼): HV Brick
g. tSPD (qty=4, 1/ ¼): Power Supplies
h. DTS on above, for "physics", GTSN
i. Interconnecting Cabling

7. Silicon microstrip Tracker - "T" - 1/2

The Tracker

a. Ladders (192=24*8), support structure
b. TFE electronics (hybrids), 1pr/ladder
c. T-Crates (qty=8): readout elect.
d. T(,m,s)PD (1/crate): Power supplies
e. Interconnecting Cabling

7. Silicon microstrip Tracker - "T" - 2/2

Tracker Thermal Control System "TT"

f. Evaporators connected to TFE
   (thermally connected)

g. Primary & Secondary Loops

h. TTCB-P, -S, (Pri=Port, Sec=Starb)
   equipment like pumps, heat exchangers, valves, ...

i. Wake & Ram Condensers, each

j. Wake & Ram TT Radiators

k. DTS, PTS & readout for the above

l. TT-Crate: electronics for above

m. TTPD: Power Supplies

n. Interconnecting Cabling

8. TRD – Transition Radiation Detector - "U" - 1/2

Detector (Octagon)

a. Tubes, fiber radiator, support struct

b. UFE, UHVD electronics on sides

c. DTS buried within Octagon

Electronics

d. U-Crates (qty=2): readout elect., HV

e. UPD: Power Supplies, each

f. Interconnecting Cabling

8. TRD – Transition Radiation Detector - "U" - 2/2

TRD Gas System "UG"

g. UGBS: supply box with Xe, $C0_2$ vessels
h. UGBC: circulation box with pump
i. 120V Heaters for above (tanks, valves)
j. Manifolds & flipper valves on Octagon
k. Interconnecting gas plumbing
l. Electronics & sensors near Octagon
m. UG-Crate to monitor & control above
n. UGPD: Power Supplies
o. Interconnecting Cabling

9. PDS – Power Distribution System

a. PDS box

b. 124V Cabling to CAB, CCEB, heaters,
28V Cabling to xPDs (x=ER,J,M,S,T,TT,U,UG)

10. Trigger & Data Acquisition - "J"

a. JT-Crate: Trigger & intermediate DAQ

b. J-Crate: JMDC computers (qty=4), interface boards JxIF, x=L,H

c. JPD: Power Supplies for J-,JT- & cabling

d. Interconnecting DAQ & trigger cables
   (JT- to J-, E-, M-, JINR, T-, S-, U-)

e. Connections to, readout of, GTSN DTS

f. CAN bus cable (J-,JPD,CAB,CCEB,M-,UG-,PDS)

11. Thermal Control System

a. Ram, Wake (main) radiators,
b. 120V heaters on radiators
c. MLI all over the place

12. Unique Support Structure & Integration Hardware

a. Upper USS, including vacuum case
b. Lower USS, support ECal, RICH
   & their elect. except ERPD
c. Keel USS
d. ½ PAS - Payload Attach System, includes main bond to ISS (STS=?)
e. ½ UMA – ISS Power & Data connector
f. Other: handholds, footrests, EVA panel, IFPA, ROEU (STS P&D plug), FRGF, PVGF, EBCS, some MLI
g. Interface Cabling to J- and PDS

States of AMS – Power Steps

Power Steps	
0	Undefined/Transitional (Power Off)
1	Communication Established
2	Magnet Monitoring
3	Stable Standby
4	Nominal Data Taking *(FlightDesign)*
Side Steps	
2A	Magnet Charging
3A	Tracker Thermal Studies
4A	Max Power for pre-heating *(tbc)*

Power Step Implementation

- In fact, can only set switches in PDS to enable/disable power flow.
- Scan switches to determine Power Step, cannot really verify if associated equipment is operating OK.
- Critical to not power electronics, etc when T is outside operational range
- Also need to keep max load < 2KW.

Power Management Strategy (keep max load < limit)

- When too cold and get power, want to heat at max and get into operation as soon as possible
- When operating do not want to lose any power budget to unneeded heaters
- Strategy - balance heaters & equip

At power up: max heaters, min equip.

Stepping up: disable heater when T OK, enable associated equipment

Nominal Op: min heaters, max equip.

Thermal Management Strategy (except Magnet!)

- CC & TT active cooling
- Rest: Passive thermal control with heaters, “dumb” (OoR) thermostats & radiators
- Methods for thermal interlocking such that:

T (op. min) < T (at turn on) < T (op.max)

Complication: Power flows automatically to several places (xPD -> crate -> detector)

Analysis: Worst cold, hot cases within limits

(extend testing over worst case range)

Hardware: CoR Themostat (CoR) at 1 point

Software: make it someone else's problem !

Software Thermal Interlocking

- Assumes access to representative temperatures of all equipment (about) to be powered => GTSN
- Survival/Op: -55C < DTS < +125C,

  radiators get colder => use PTS (PT100) for TT & CC (Zenith radiators)
- Requires computer running software !

  Can't be used for PDS & JPD+J-Crate.

  PDS: Thermostat (+ Relay, tbd)

  JPD+J: Thermostat(s)

  Else: "MCT" program in JMDC

  + GTSN readout

PDS

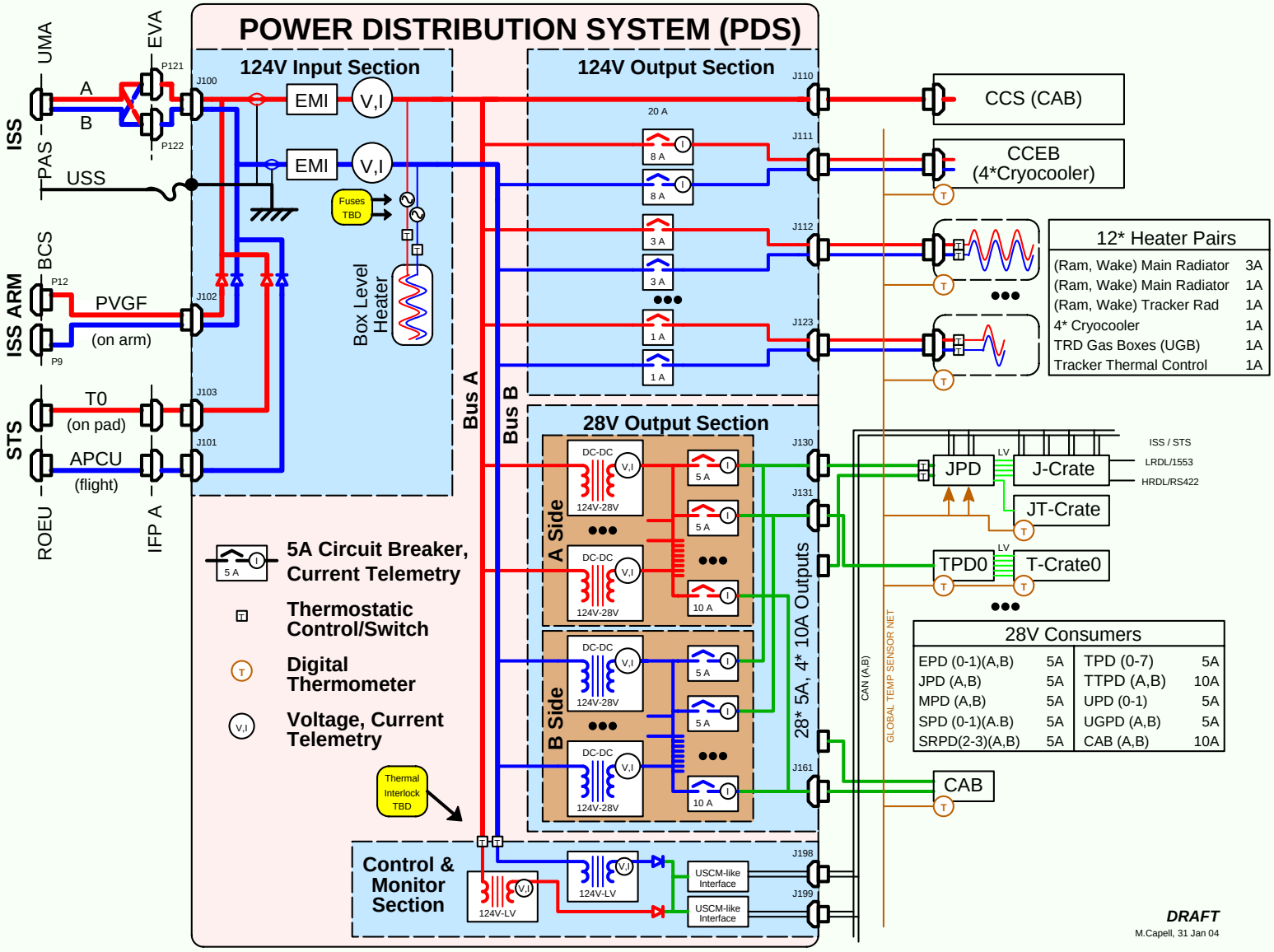
POWER DISTRIBUTION SYSTEM (PDS)
124V Input Section
124V Output Section
28V Output Section
ISS
UMA
EVA
A
B
P121
P122
J100
EMI
V,I
PAS
USS
Fuses TBD
Box Level Heater
ISS ARM
BCS
P12
PVGF
(on arm)
P9
J102
STS
T0
(on pad)
APCU
(flight)
J103
J101
ROEU
IFP A
Bus A
Bus B
20 A
8 A
3 A
1 A
J110
J111
J112
J123
CCS (CAB)
CCEB
(4*Cryocooler)
12* Heater Pairs
(Ram, Wake) Main Radiator 3A
(Ram, Wake) Main Radiator 1A
(Ram, Wake) Tracker Rad 1A
4* Cryocooler 1A
TRD Gas Boxes (UGB) 1A
Tracker Thermal Control 1A
DC-DC
124V-28V
5 A
10 A
A Side
B Side
J130
J131
J161
28* 5A, 4* 10A Outputs
ISS / STS
LRDL/1553
HRDL/RS422
JPD
LV
J-Crate
JT-Crate
TPD0
T-Crate0
28V Consumers
EPD (0-1)(A,B) 5A
JPD (A,B) 5A
MPD (A,B) 5A
SPD (0-1)(A.B) 5A
SRPD(2-3)(A,B) 5A
TPD (0-7) 5A
TTPD (A,B) 10A
UPD (0-1) 5A
UGPD (A,B) 5A
CAB (A,B) 10A
CAB
CAN (A,B)
GLOBAL TEMP SENSOR NET
5A Circuit Breaker, Current Telemetry
Thermostatic Control/Switch
Digital Thermometer
Voltage, Current Telemetry
Thermal Interlock TBD
Control & Monitor Section
124V-LV
USCM-like Interface
J198
J199
DRAFT
M.Capell, 31 Jan 04

Powering up AMS: Power Step 0 =>1

- Power applied from any source
  {ISS/(UMA, PVGF) A or B or A&B, STS/(APCU A, T0 B)}
- When T(PDS) OK(local), PDS enables:
  124V Heaters - except CC substitution htr.
  2*28V JPD+J+JT
- When T(JPD+J+JT) OK(local), JPD powers:
  J-Crate => 4*JMDC + JxIF activate
- When “Command received”:
  One JMDC selected to start MCT
  (Starts read out of GTSN, other JMDC may be powered OFF)

✓ POWER STEP 1 !

Powering up AMS: Power Step 1 => 2

- When T(CAB) OK(GTSN):

  MCT -> PDS: “disable CAB heaters”

  MCT -> PDS: “enable CAB 28V feed(s)”

- When CAB <-> MCT

  MCT -> CAB: “Reset watch dog
  auto-ramp-down timer!”

✓ POWER STEP 2 !

Powering up AMS: Power Step 2 => 3

In parallel or sequentially,

When T(x) OK(GTSN):

MCT -> PDS: enable x, where x=

- Activate Cryocoolers (tricky, see next)

  CC Zenith & Subs heaters disabled when done.

- Activate M-Crate (tbc)
- Activate Tracker-Thermal (see TT pitch?)
- Activate TRD-Gas

  UG 120V heaters (valves, tanks) always enabled

- POWER STEP 3 !

Powering up AMS: Power Step 3 => 4

When T(Main Wake, Ram Rad) OK(GTSN):

MCT -> PDS: disable those 120V heaters

In parallel or sequentially,

When T(x) OK(GTSN):

MCT -> PDS: enable x, where x=

- ERPD+E+EHV+ECal+R+RHV+RICH (*2)
  - E, EHV, RHV 120V heaters always enabled
- SPD+S+SHV+Scint(ToF,ACC) (*4)
- When (TT OK) TPD+T+Tracker/8 (*8)
- When (UG OK) UPD+U+TRD (*2)
- M(AST, GPS)

- Take data

- POWER STEP 4 !

Charging the Magnet: Power Step => 2A

Turn OFF: E, R, M?, S, TT, U, UG

Leave ON: PDS, J+J+JT(min), CAB N&R

Leave ON: CCEB, 4*CC (for now), UG?, TT?

Disable Heaters

Enable 120V to CAB

Command CAB to ramp to current XXX
(where XXX <460A max)

When P(CAB) getting too large,
switch off 4*CC, ER heaters, UG heaters,

Finish ramp, goto power step 3, to 4, ...