Radiator Design Status

Bert Hollenbach,
Dr. Reinhard Schlitt

OHB-System AG, Bremen, Germany

1. Introduction
2. Zenith Radiator
3. Tracker Radiator
4. Main Radiator

1. Introduction

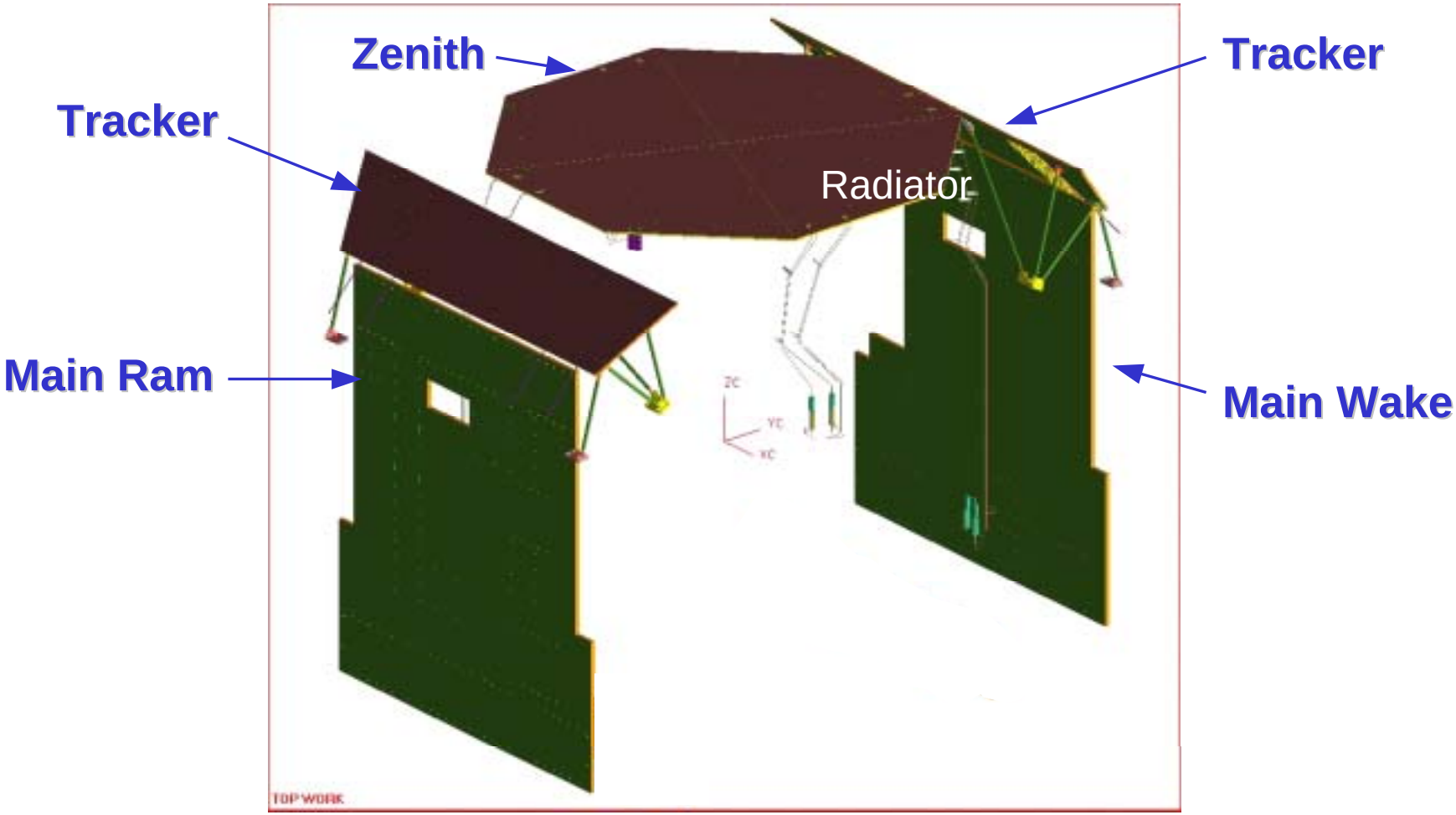

2. Zenith Radiator

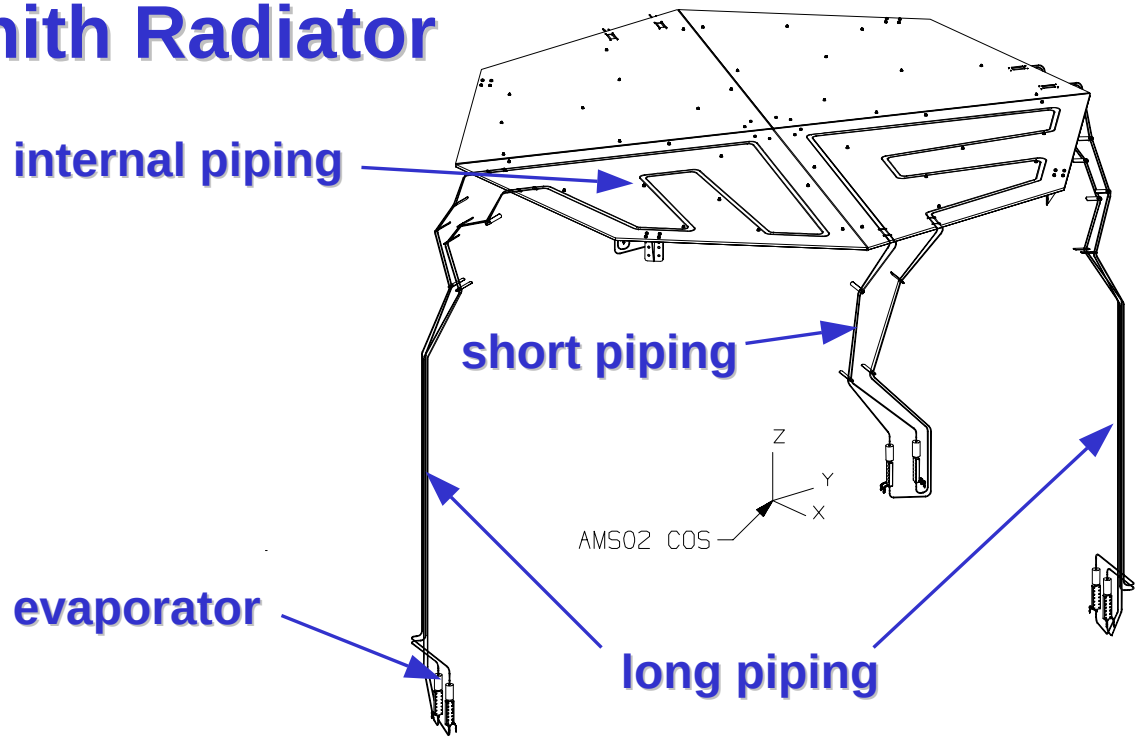

- 4 equal sandwich panels with approx.~4,7m internal piping of 3x2mm Al each
- 2 equipped with a long cryocooler piping (approx. 2x 2,9m of 3x2mm steel pipe and evaporator each)
- 2 equipped with a short cryocooler piping (approx. 2x 1,4m of 3x2mm steel pipe and evaporator each)

2. Zenith Radiator- sandwich layout

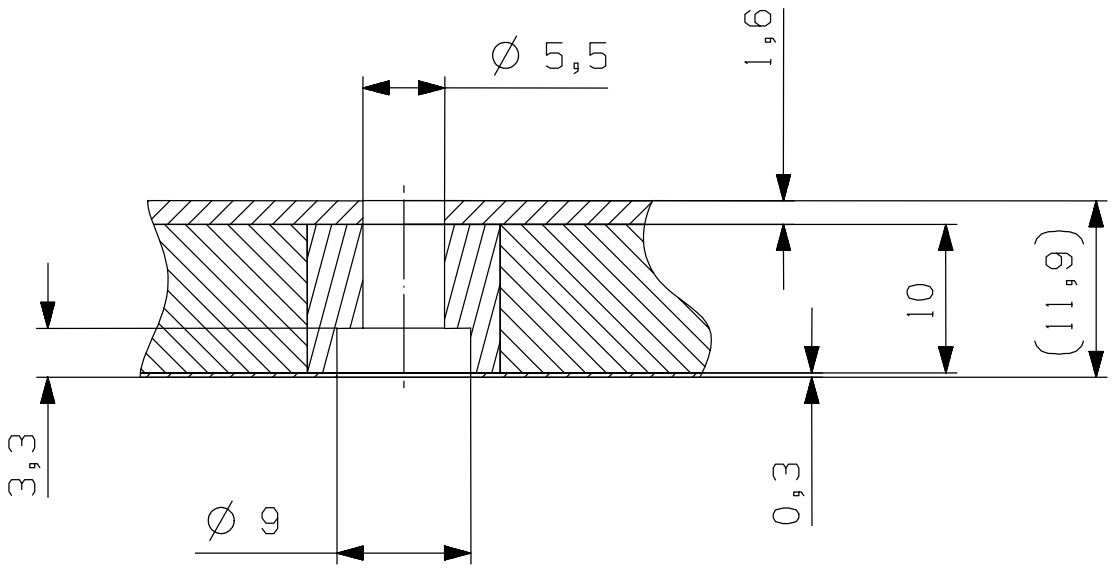

- face sheet 1 t=1,8mm Al
  core t=10mm Rohacell 51WF
  face sheet 2 t=0,3mm Al

2. Zenith Radiator – pipe connection

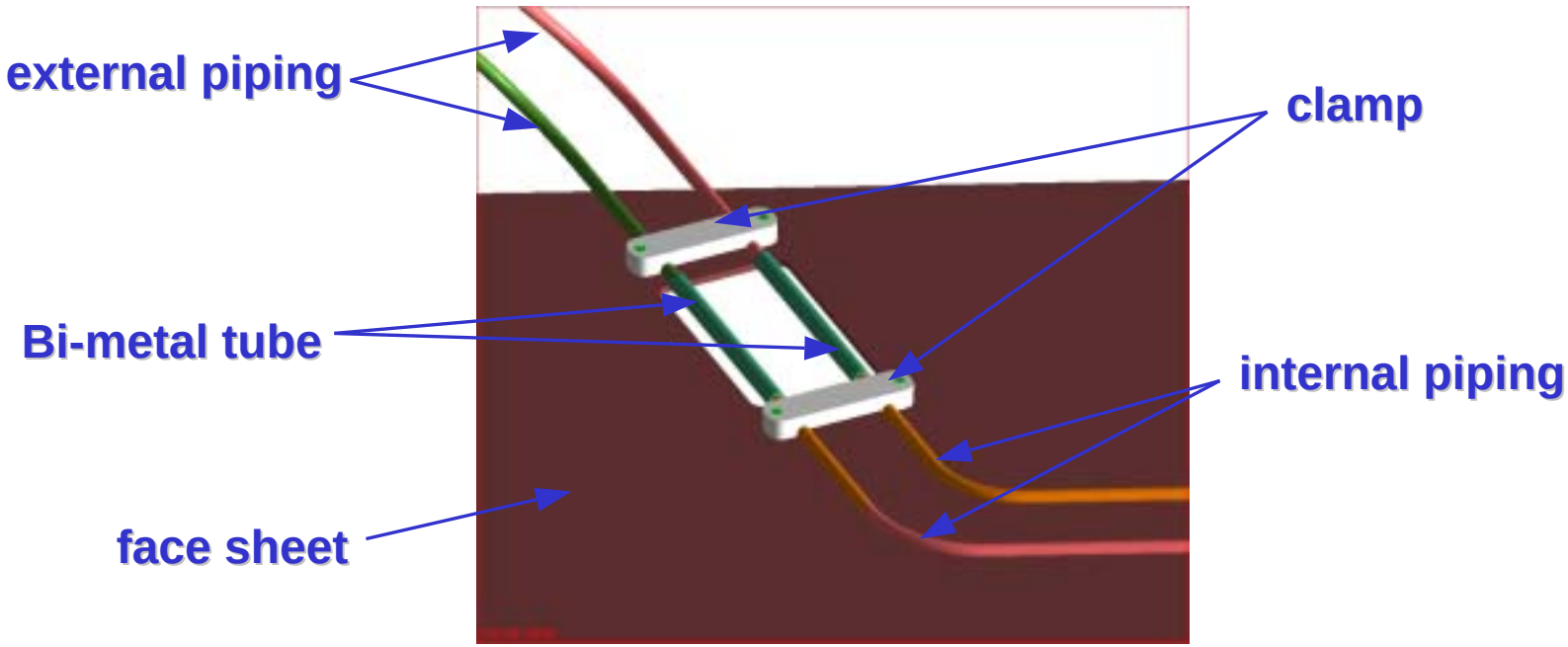

- external Loop Heat Pipe connected to internal Loop Heat Pipe by bi-metal sleeve and clamped to face sheet 1 (foam and face sheet 2 removed in view)
- internal piping is soldered to face sheet

2. Zenith Radiator – external routing

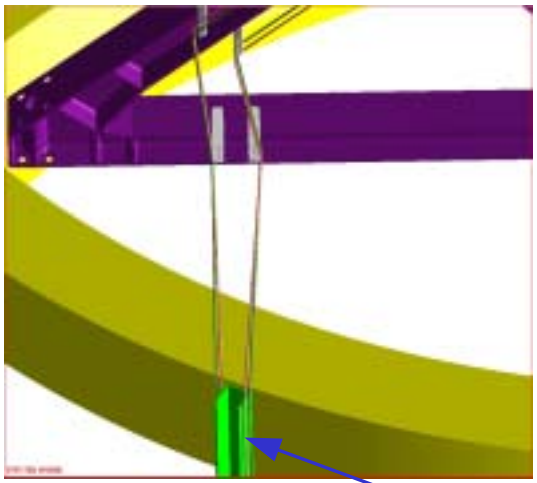

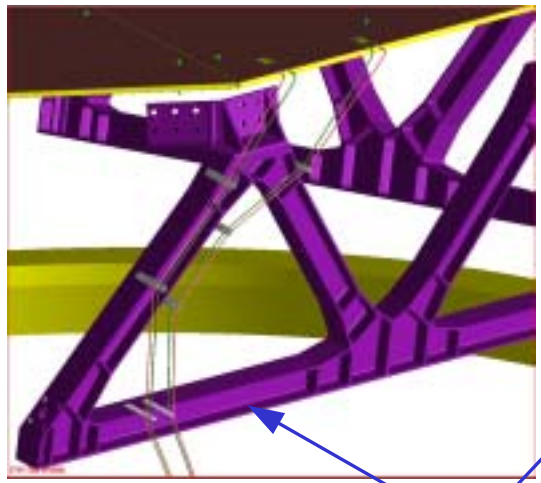

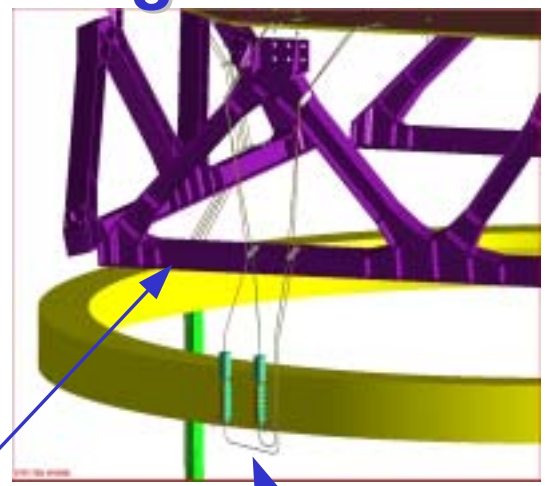

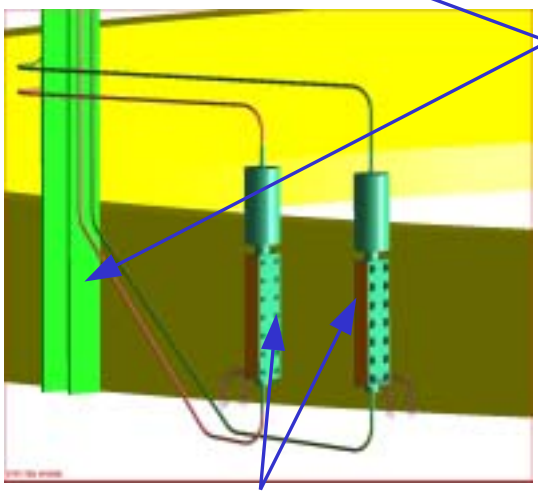

C-profile

M-structure

short piping

evaporator

- external Loop Heat Pipe routing along M-structure via tbd brackets (carbon or glass fibre) and tywraps, long piping uses C-profiles along vacuum case

2. Zenith Radiator – mounting to TRD

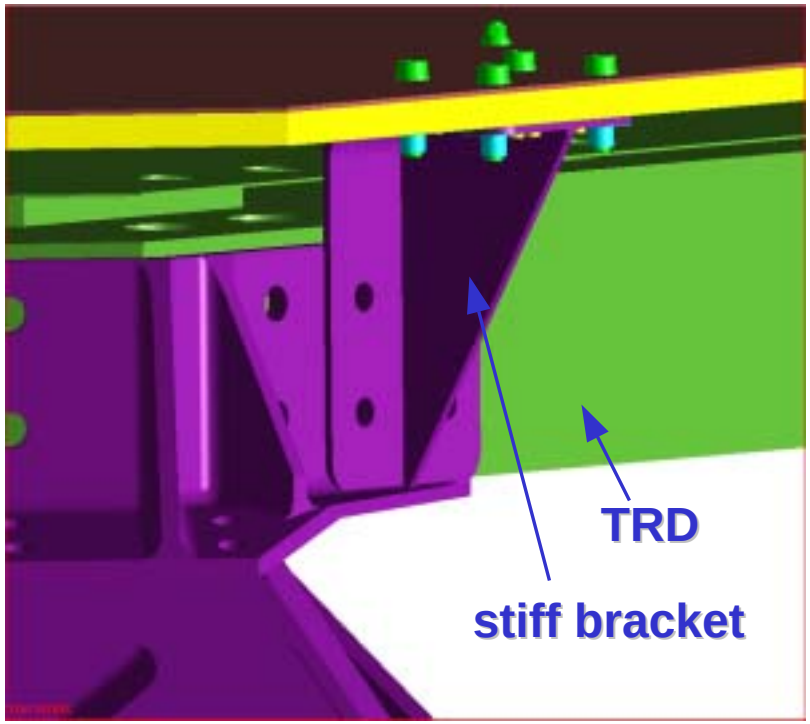

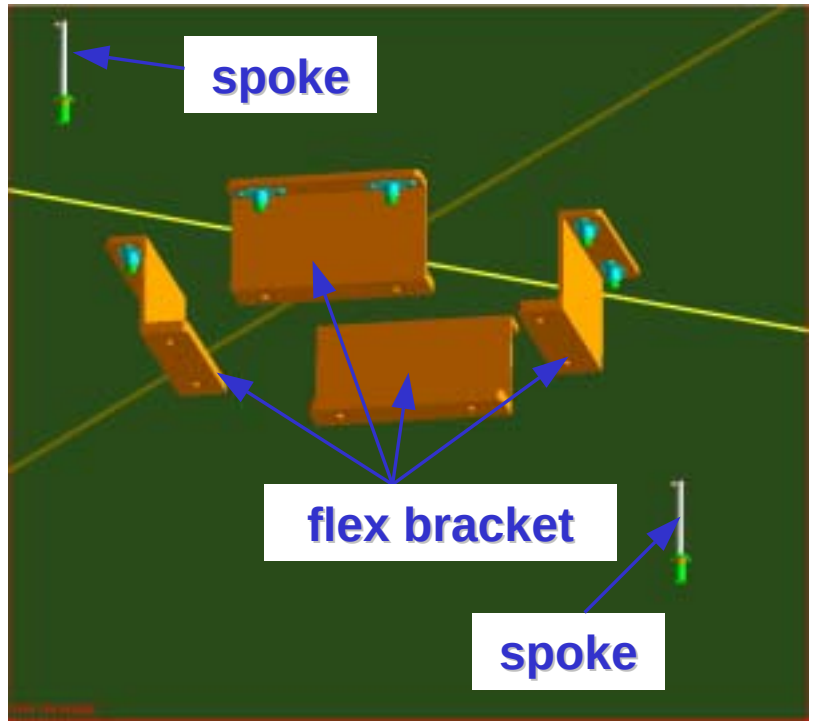

- each panel is mounted on TRD by 1 stiff bracket, 1 flexible bracket and 10 spokes

2. Zenith Radiator – open points

- routing along M-structure/bracket design
- bonding
- “curling” of Loop Heat Pipes
- insulation of Loop Heat Pipes

3. Tracker Radiator

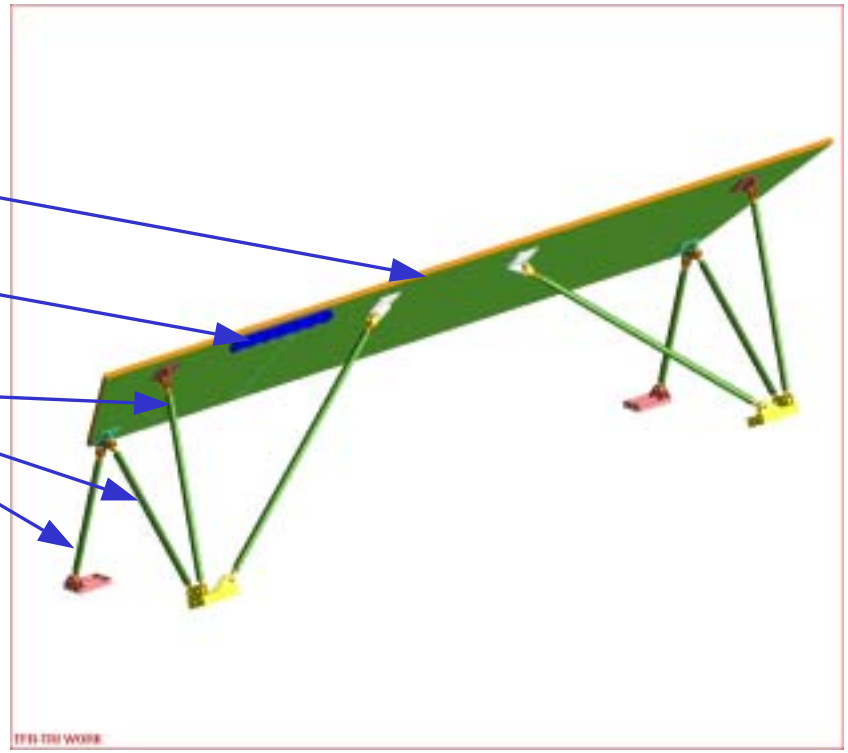

- 2 equal sandwich panels
- face sheet 1 t=0,8mm Al (0,7 for procurement reason to avoid mass impact)

  core t=14mm Rohacell 51WF

  face sheet 2 t=0,2mm Al (0,3 for procurement reason)

  8x (tbc) Heat Pipe based on AGHP 14 (tbc)

3. Tracker Radiator – condenser mounting

outside mounting **inside mounting**

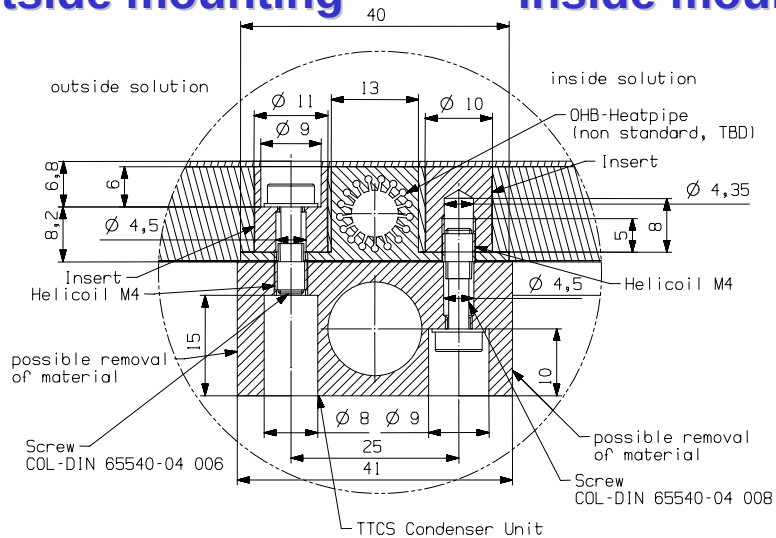

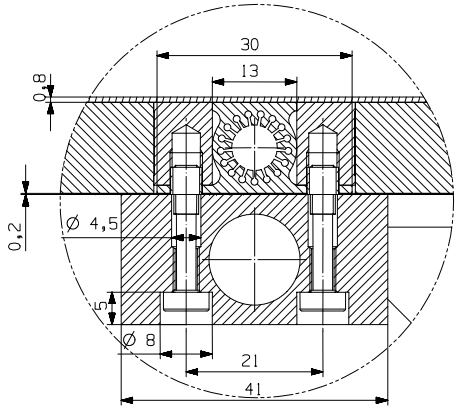

Based on standard AGHP14

- **condenser mounted to panel from outside or inside combining rod attachment for whole panel**
- **mass impact negligible**

3. Tracker Radiator – open points

- bonding
- number of heat pipes
- equal length of heat pipes or length following trapezoidal shape
- mounting sequence
- number of bolts
- face sheet thickness

4. Main Radiators

main wake radiator

(face sheet not shown)

main ram radiator

(face sheet not shown)

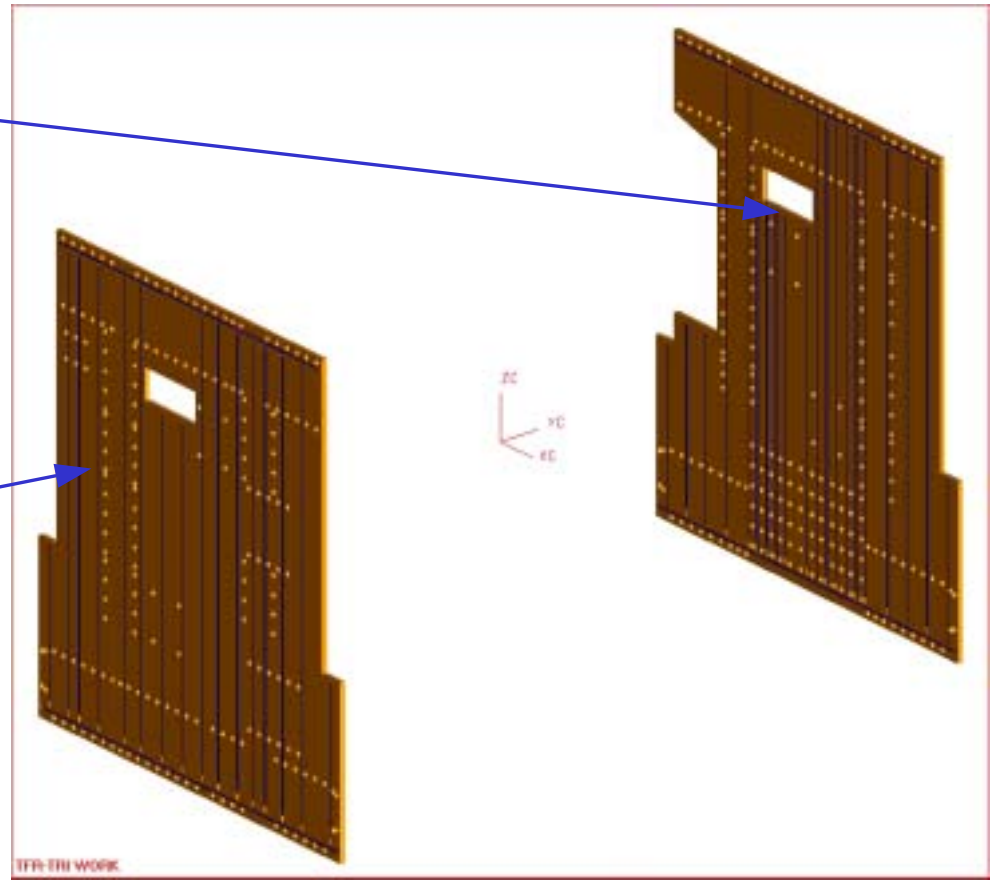

- 2 different sandwich panels according to box i/f's and shape requirements

4. Main Radiator – heatpipe and insert layout

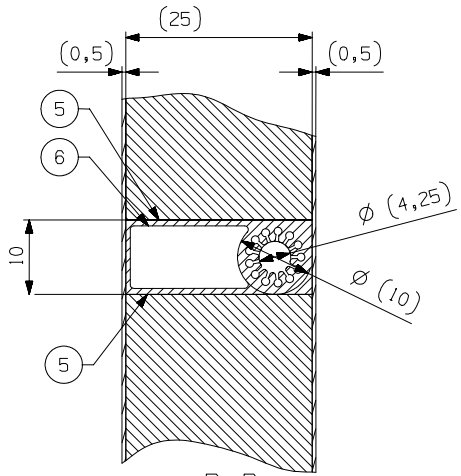

SECTION B-B

Scale 2:1
typical heatpipe design

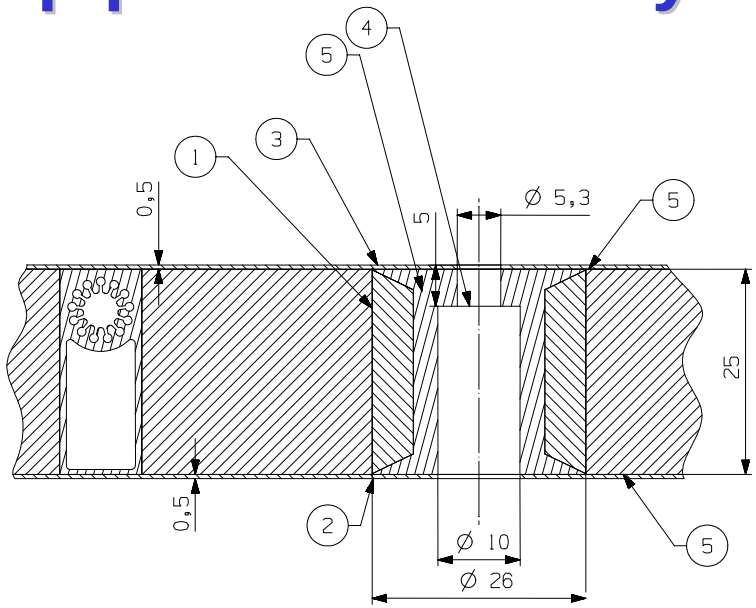

SECTION A-A

Scale 1:1
typical insert design

- face sheet 1 t=0,5mm Al (box side 0,6 for thermal reason)
  core t=25mm Rohacell 51WF
  face sheet 2 t=0,5mm Al (0,4 see above to avoid mass impact)
- heat Pipe based on AGHP 10E

4. Main Radiator – open points

- bonding and bonding i/f's
- additional bracket i/f's
- face sheet thickness