* ACOP CSYS ORIGIN
* ACOP OVERALL DIMENSIONS : CLOSED

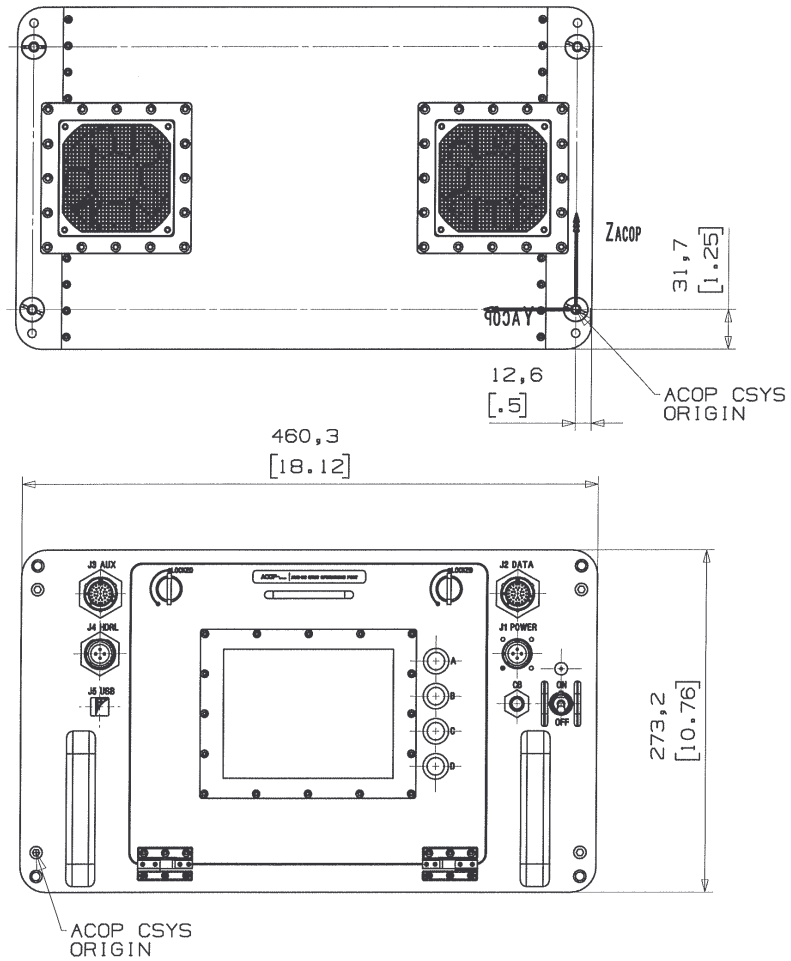

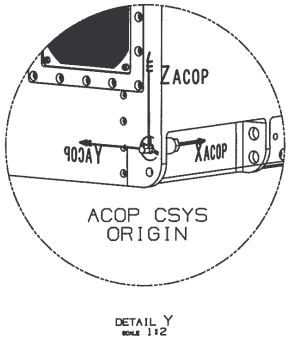

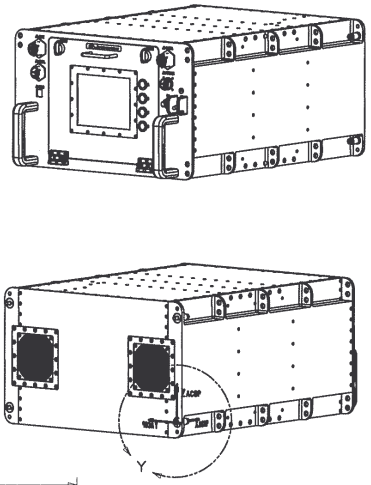

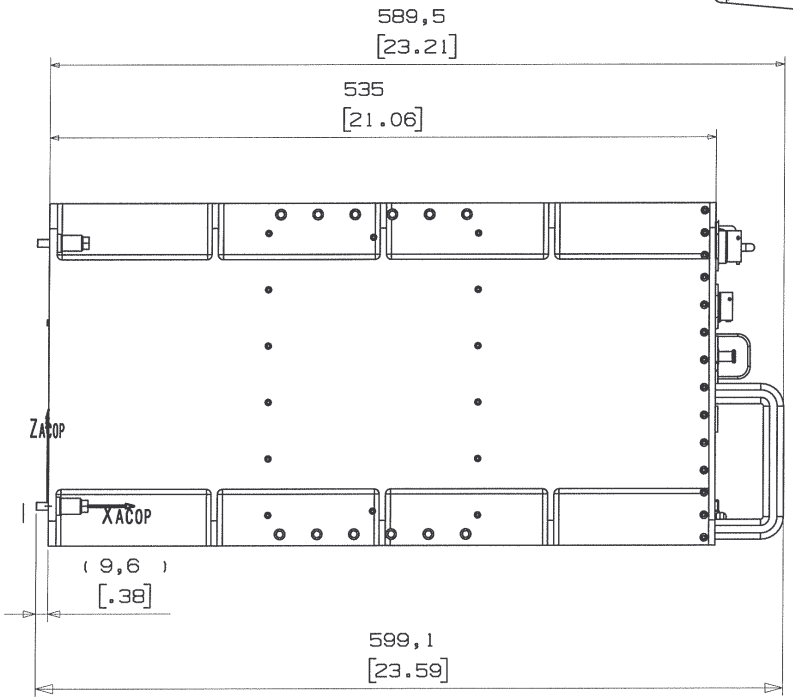

NOTES :

-MASS (±5%):
- * On Orbit configuration : 30,8 kg
- * Launch configuration : 26 kg

-DIMENSIONS(±0,5mm) :
- * ACOP CLOSED(included handles and bolt protrusion) : X=599,1mm; Y=460,3mm;Z=273,2mm
- * ACOP OPEN : See sheet 2/6 & 3/6

⚠-COG (±5%):
- * Launch configuration : X=271,5mm; Y=208,8mm;Z=99,7mm

-MATERIALS :
- * AL7075 T7351 for main parts LOCKER
- * AL6061 T6 for main parts CHASSIS

-SURFACE TREATMENTS :
- * ALODINE 1200 MIL-C-5541 CLASS 3 ; CLEAR ANODIZE MIL-A-8625,TYPE II, CLASS1
- * PAINT acc . FED-STD-595B : OFF WHITE SEMI-GLOSS COLOUR 27722

FLAGS :

⚠ DIMENSION ARE REFERRED TO ACOP CSYS ORIGIN

FILE MODEL: ACOP_ASSY
FILE DRAWING: ACOP_ICD1

REV	DRAWN	DATE	CHECK	DATE	CHECK	DATE	SYST ENG	DATE	PA	DATE	CoC	DATE	CHANGE AUTHORITY
draft	AA oct2005												

CARLO GAVAZZI SPACE

DRAWING TITLE: ACOP MECHANICAL ICD

SCALE 1:2 — PROJECTION — ISO 2768- — CARLO GAVAZZI

DRAWN NUMBER: N.A. — NEXT ASSY — APPLICATION

SIZE A1 — CAGE CODE N.A. — DRAWING NUMBER 00-ACP-00.002 — REV draft — SHEET 1 OF 8

THIS IS A CAD DRAWING NO MANUAL ALTERATION ALL RIGHTS RESERVED - COPYRIGHT ACC. TO DIN 34

* ACOP OVERALL DIMENSIONS : OPEN 120°

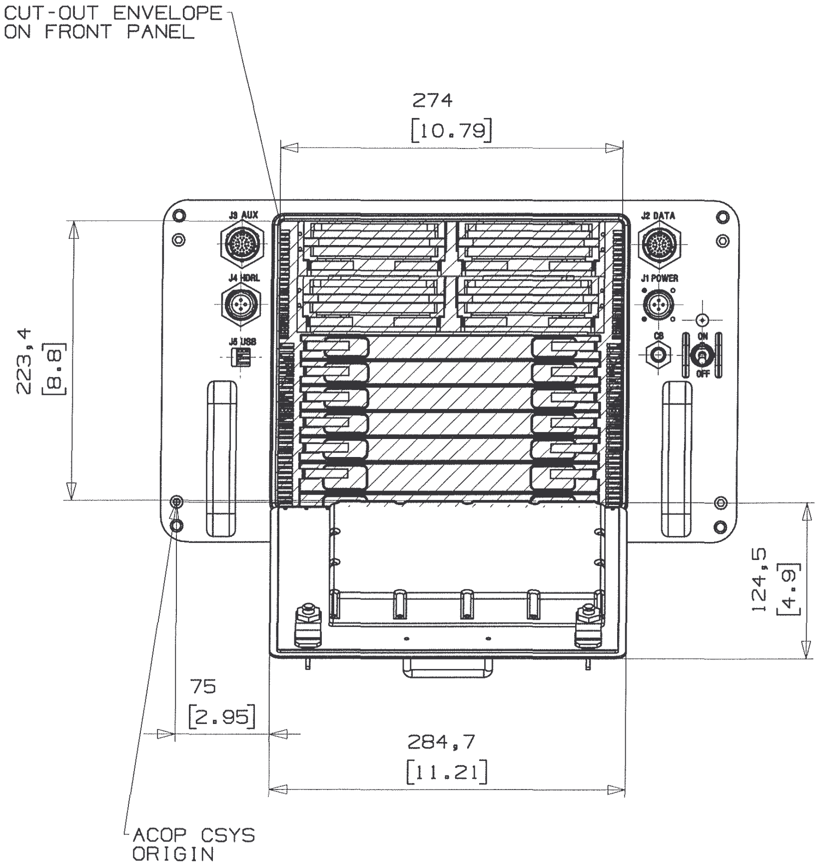

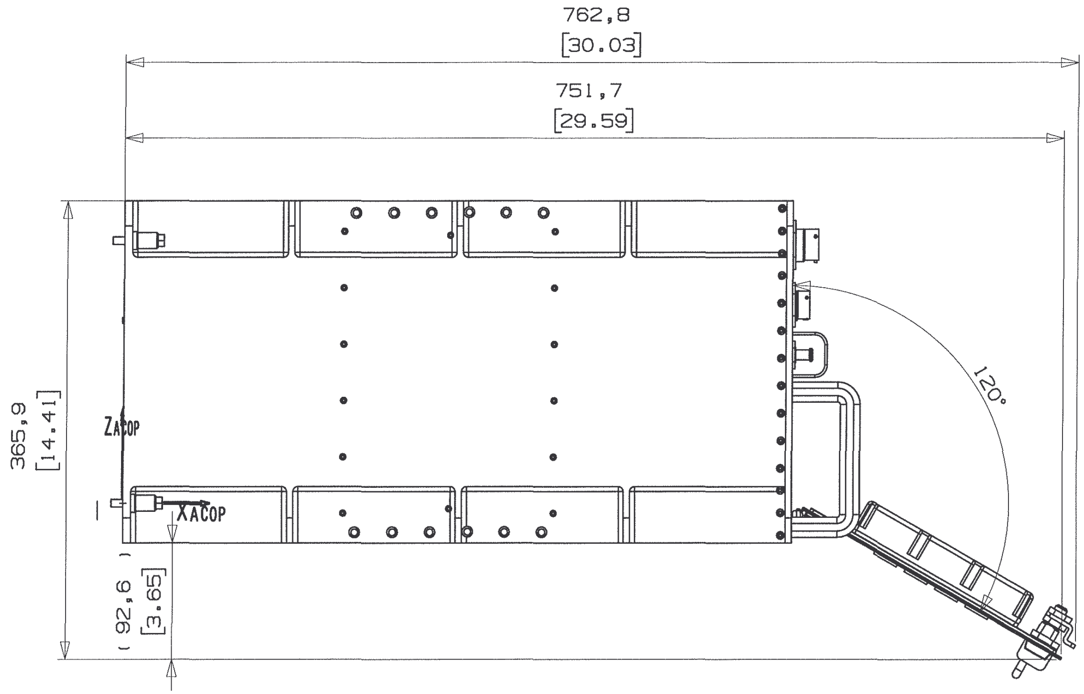

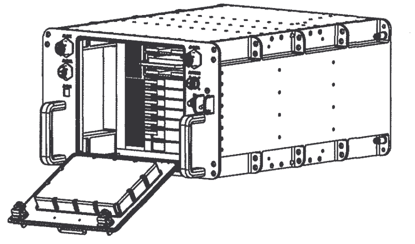

FILE MODEL: ACOP_ASSY
FILE DRAWING: ACOP_ICD1

DASH NUMBER	NEXT ASSY: N.A.
APPLICATION	

draft AA oct2005

REV | DRAWN DATE | NEC CHECK DATE | EL CHECK DATE | SYST ENG DATE | PA DATE | DoC DATE | CHANGE AUTHORITY

CARLO GAVAZZI SPACE

DRAWING TITLE: ACOP MECHANICAL ICD

SCALE 1:2 — PROJECTION — ISO 2768-

SIZE A1 — CAGE CODE N.A. — DRAWING NUMBER 00-ACP-00.002 — REV draft — SHEET 2 OF 6

CARLO GAVAZZI

THIS IS A CAD DRAWING NO MANUAL ALTERATION

ALL RIGHTS RESERVED - COPYRIGHT ACC. TO DIN 34

* ACOP OVERALL DIMENSIONS : OPEN 170°

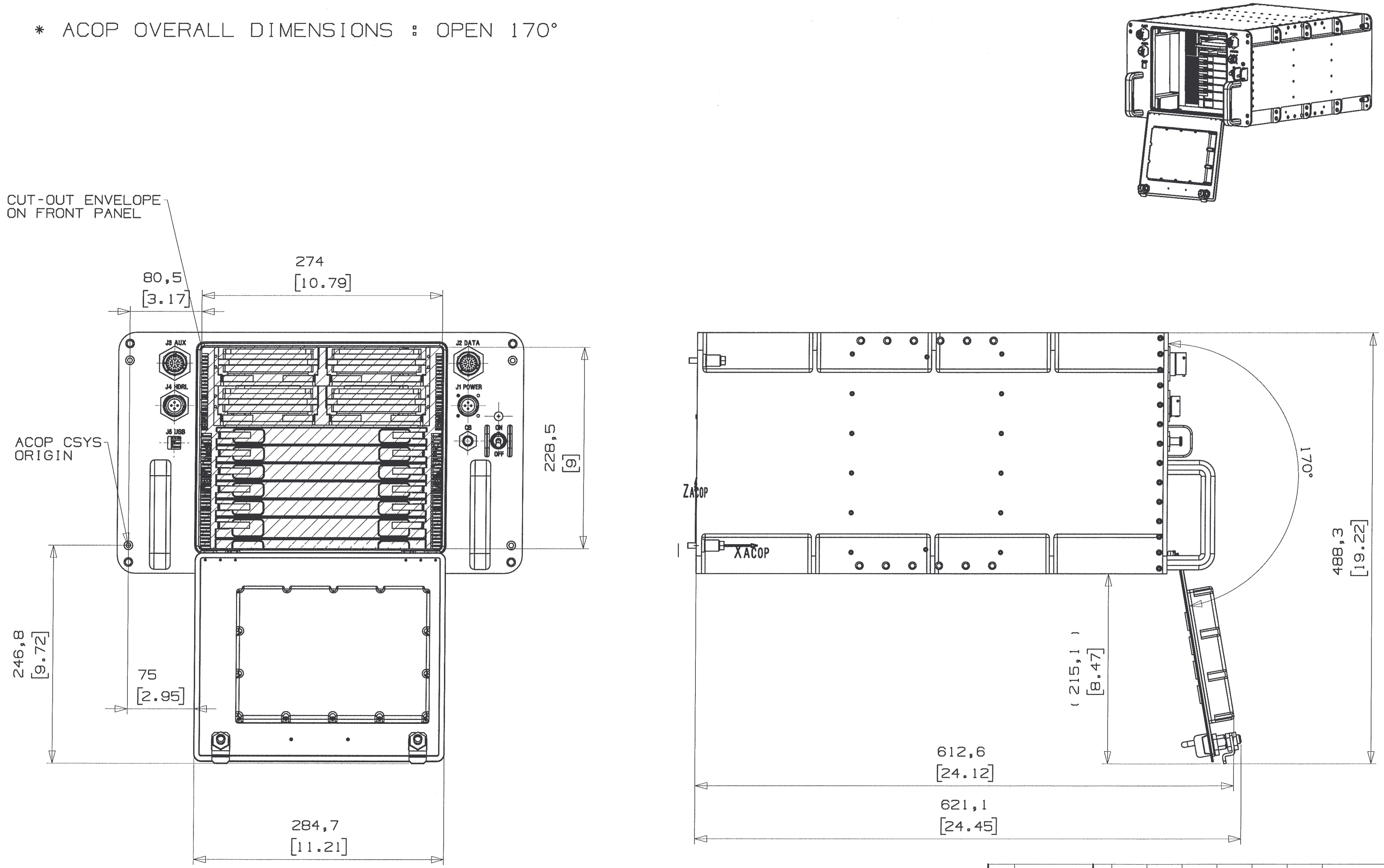

FILE MODEL: ACOP_ASSY
FILE DRAWING: ACOP_ICD1

NEXT ASSY	N.A.
DASH NUMBER	
APPLICATION	

REV	DRAWN	DATE	MEC CHECK	DATE	EL CHECK	DATE	SYST ENG	DATE	PA	DATE	QC	DATE	CHANGE AUTHORITY
draft	AA	oct2005											

UNLESS OTHERWISE SPECIFIED DIMENSIONS AND TOLERANCES ARE IN mm

IDENTIFICATION MARKING PER

CARLO GAVAZZI SPACE

DRAWING TITLE: ACOP MECHANICAL ICD

SCALE 1:2 — PROJECTION — GEN. TOLERANCES PER ISO 2768-

SIZE A1 — CAGE CODE N.A. — DRAWING NUMBER 00-ACP-00.002 — REV draft — SHEET 3 OF 6

CARLO GAVAZZI

THIS IS A CAD DRAWING NO MANUAL ALTERATION

ALL RIGHTS RESERVED - COPYRIGHT ACC. TO DIN 34

COG & Express Rack I/F(Payload Attach Points); All dimensions are from ACOP CSYS ORIGIN

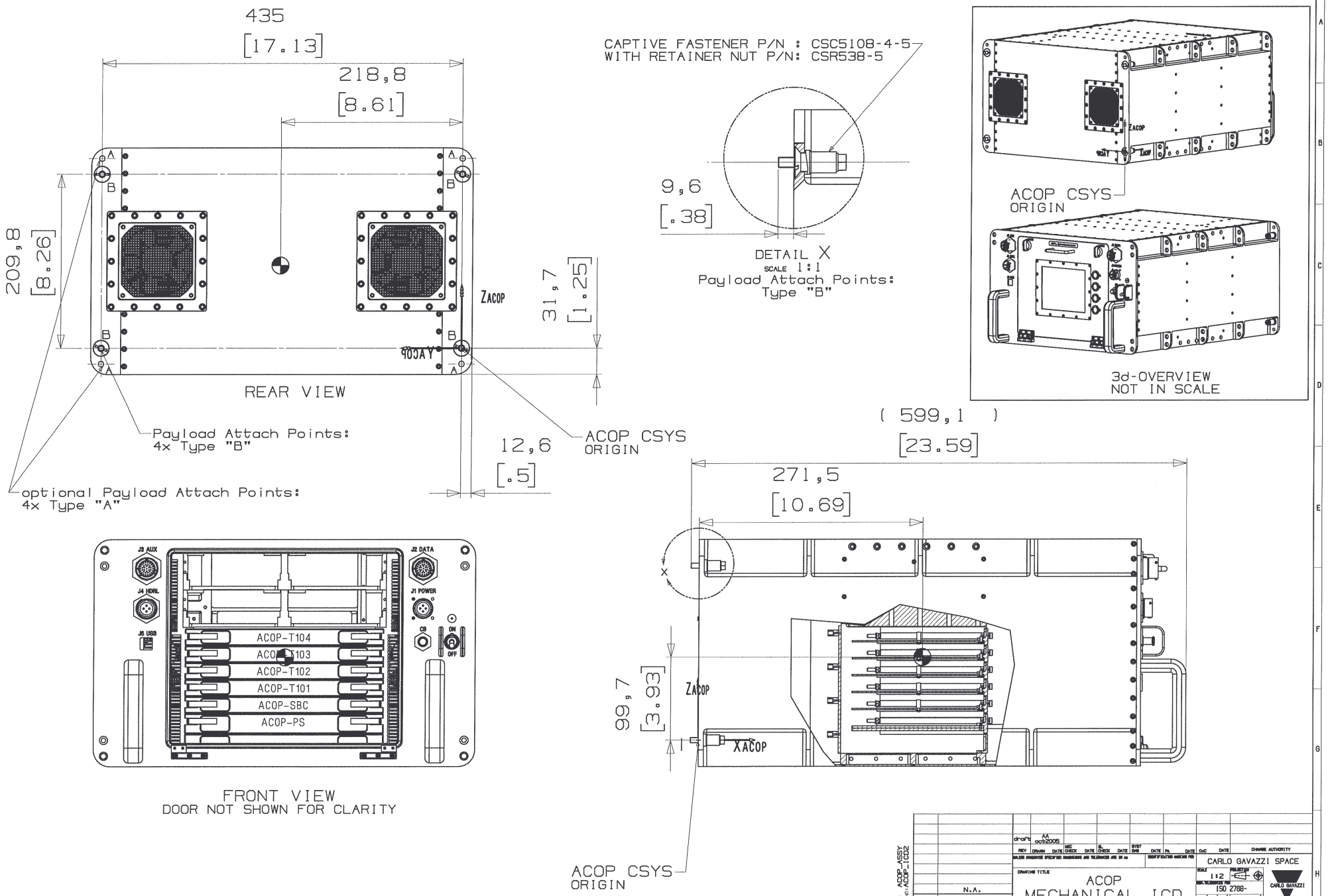

				draft	AA oct/2005									
				REV	DRAWN DATE	MEC CHECK DATE	EL CHECK DATE	SYST ENG DATE	PA DATE	CoC DATE	CHANGE AUTHORITY			
				UNLESS OTHERWISE SPECIFIED DIMENSIONS AND TOLERANCES ARE IN mm										
				DRAWING TITLE	ACOP MECHANICAL ICD							CARLO GAVAZZI SPACE		
												SCALE 1:2	PROJECTION	CARLO GAVAZZI
												GEN. TOLERANCES PER ISO 2768-		
												SPECIAL TOL.	SEAL	
				DASH NUMBER	N.A.	NEXT ASSY							REV draft	
				APPLICATION			SIZE A1	CAGE CODE N.A.	DRAWING NUMBER 00-ACP-00.002				SHEET 4 OF 8	

FILE MODEL: ACOP_ASSY
FILE DRAWING: ACOP_ICD2

THIS IS A CAD DRAWING NO MANUAL ALTERATION

ALL RIGHTS RESERVED - COPYRIGHT ACC. TO DIN 34

REAR PANEL : AAA I/F
FRONT PANEL : ELECTRONICS I/F; All dimensions are from ACOP CSYS ORIGIN

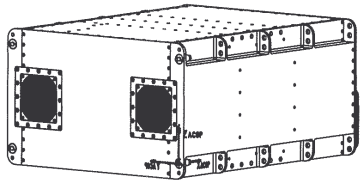

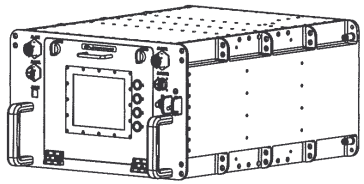

ID	LOCATION	P/N	FUNCTION	REMARKS
J1	FRONT PANEL	NBOE14-4PNT	POWER	
J2	FRONT PANEL	MS27468T15F35P	DATA	
J3	FRONT PANEL	MS27468T15F35P	AUX	
J4	FRONT PANEL	D38999/24FC4SN	HRDL	
J5	FRONT PANEL	TBD	USB	
CB	FRONT PANEL	MS3320-71/2	CIRCUIT BREAKER	
SWITCH	FRONT PANEL	M880593-012	PWR SWITCH	
LED	FRONT PANEL	JANTXM19500/521	PWR STATUS	
LCD	FRONT DOOR	T-5170AA-V350	LCD -LED BACKLIGHT	APOLLO DISPLAY
FAN1	BACK PANEL	SAN ACE 92W (TBC)	AAA INLET	SANYO FAN
FAN2	BACK PANEL	SAN ACE 92W (TBC)	AAA OUTLET	SANYO FAN

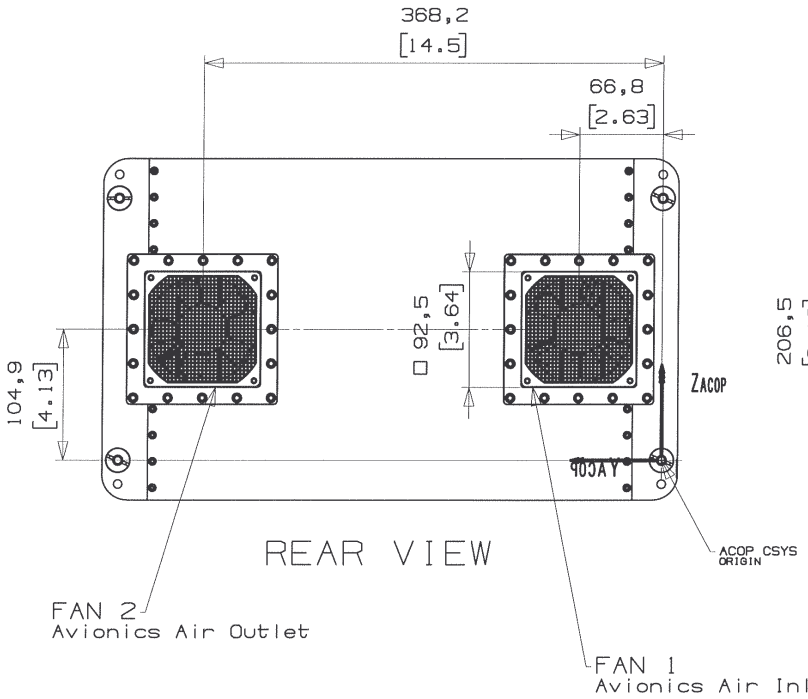

REAR VIEW

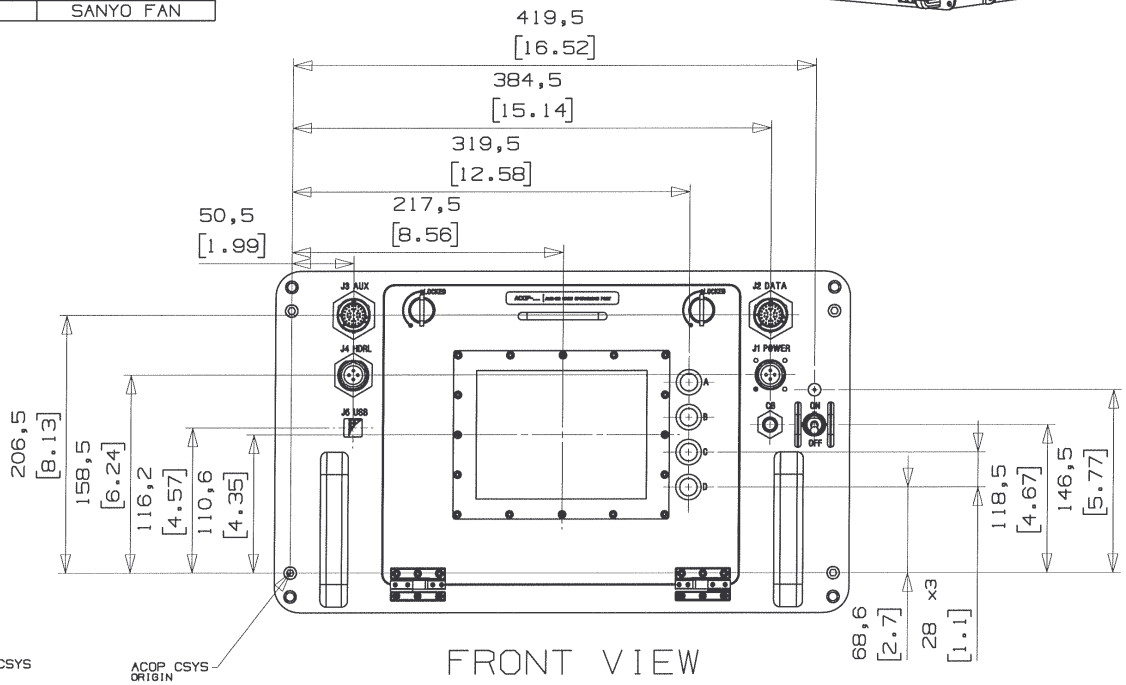

FRONT VIEW

FILE MODEL: ACOP_ASSY
FILE DRAWING: ACOP_ICD2

REV	DRAWN	DATE	MFG CHECK	DATE	EL CHECK	DATE	SYST ENG	DATE	PA	DATE	QoC	DATE	CHANGE AUTHORITY
draft	AA	oct2005											

UNLESS OTHERWISE SPECIFIED DIMENSIONS AND TOLERANCES ARE IN mm — IDENTIFICATION MARKING PER

DRAWING TITLE: ACOP MECHANICAL ICD

CARLO GAVAZZI SPACE

SCALE: 1:2 — PROJECTION — ISO 2768- — CARLO GAVAZZI

DASH NUMBER: N.A. — NEXT ASSY — APPLICATION

SIZE: A1 — CAGE CODE: N.A. — DRAWING NUMBER: 00-ACP-00.002 — REV: draft — SHEET 5 OF 6

THIS IS A CAD DRAWING NO MANUAL ALTERATION

ALL RIGHTS RESERVED - COPYRIGHT ACC. TO DIN 34

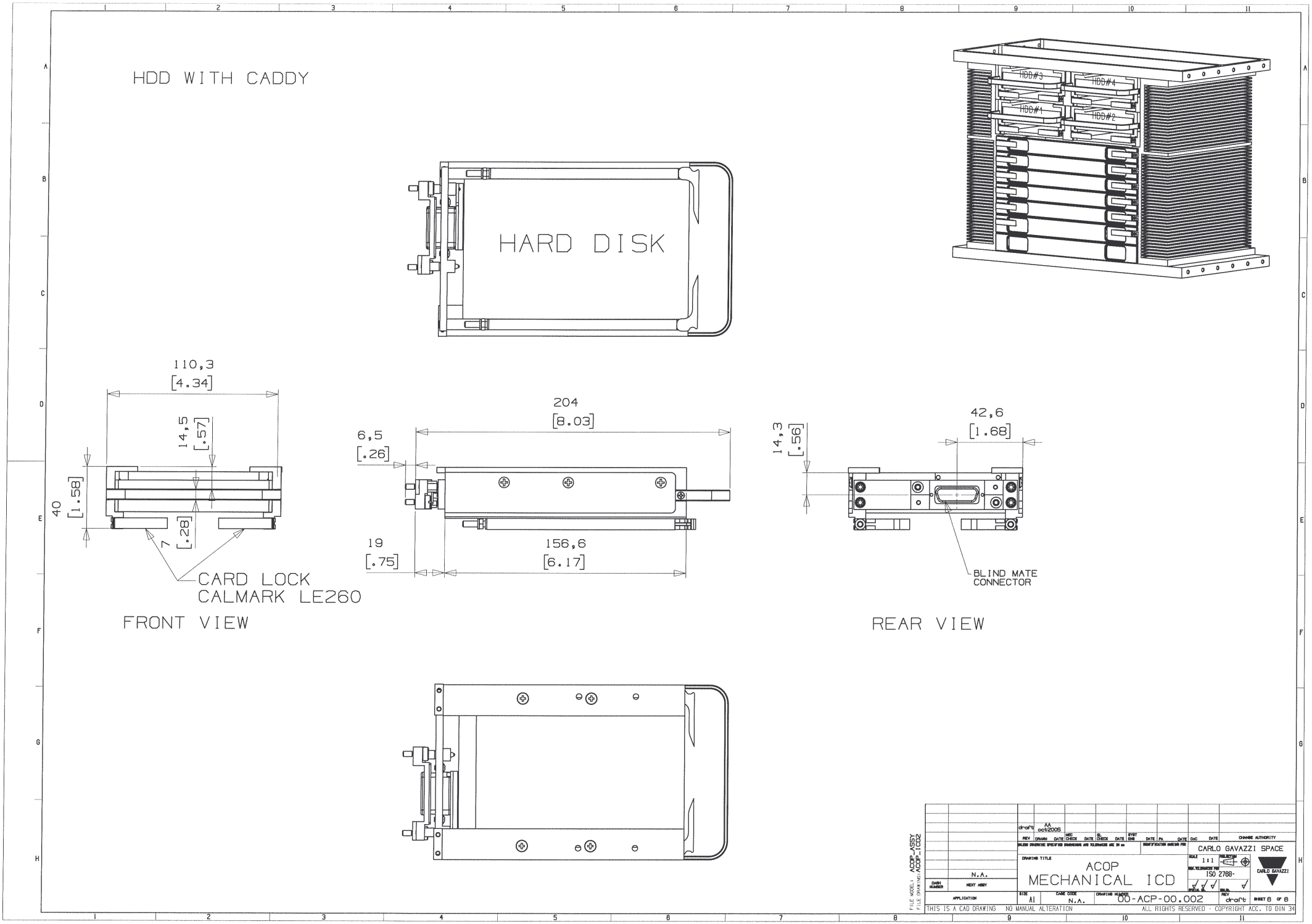
HDD WITH CADDY
HARD DISK
HDD#3
HDD#4
HDD#1
HDD#2
110,3
[4.34]
14,5
[.57]
40
[1.58]
7
[.28]
CARD LOCK
CALMARK LE260
FRONT VIEW
204
[8.03]
6,5
[.26]
19
[.75]
156,6
[6.17]
42,6
[1.68]
14,3
[.56]
BLIND MATE
CONNECTOR
REAR VIEW
FILE MODEL: ACOP_ASSY
FILE DRAWING: ACOP_ICD2
draft
AA
oct2005
REV
DRAWN
DATE
MED CHECK
DATE
EL CHECK
DATE
SYST ENG
DATE
PA
DATE
CoC
DATE
CHANGE AUTHORITY
CARLO GAVAZZI SPACE
DRAWING TITLE
ACOP
MECHANICAL ICD
SCALE
1:1
ISO 2768-
CARLO GAVAZZI
N.A.
DASH NUMBER
NEXT ASSY
APPLICATION
SIZE
A1
CAGE CODE
N.A.
DRAWING NUMBER
00-ACP-00.002
REV
draft
SHEET 6 OF 6
THIS IS A CAD DRAWING NO MANUAL ALTERATION
ALL RIGHTS RESERVED - COPYRIGHT ACC. TO DIN 34