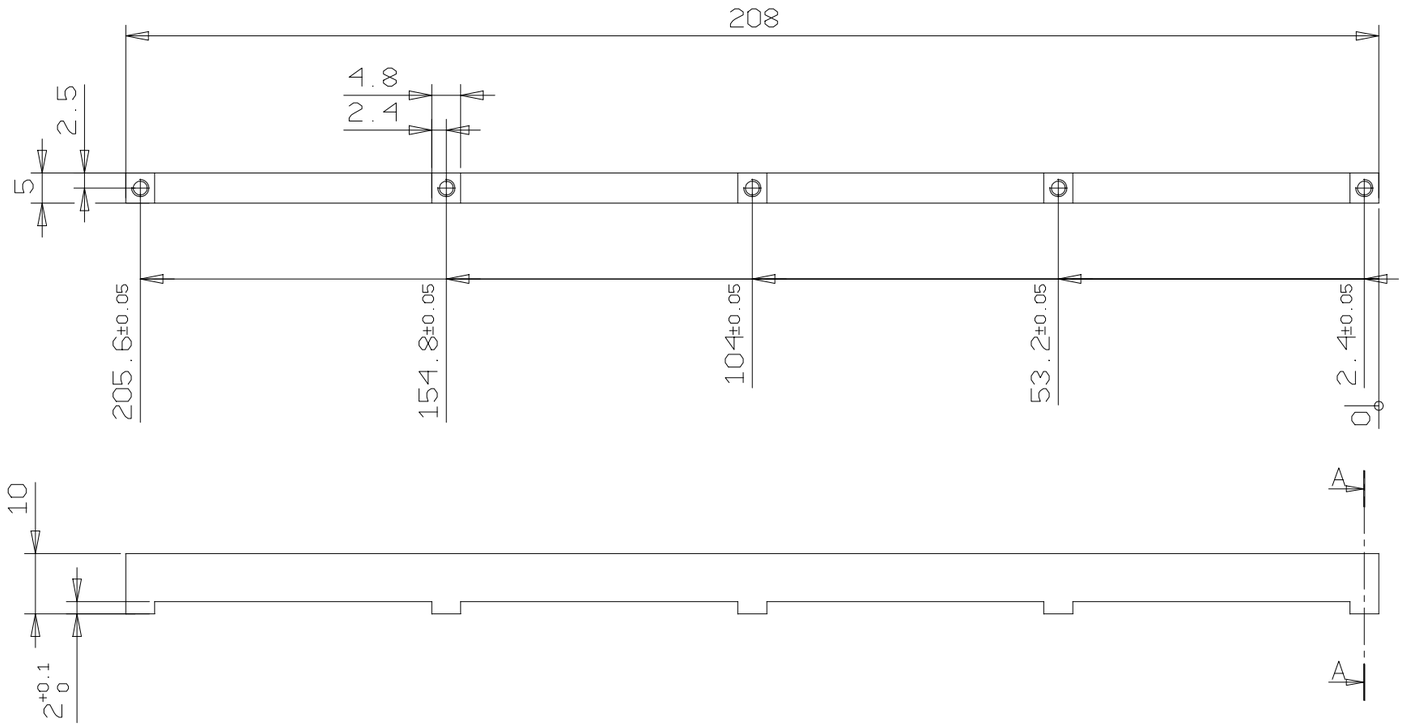

A-A

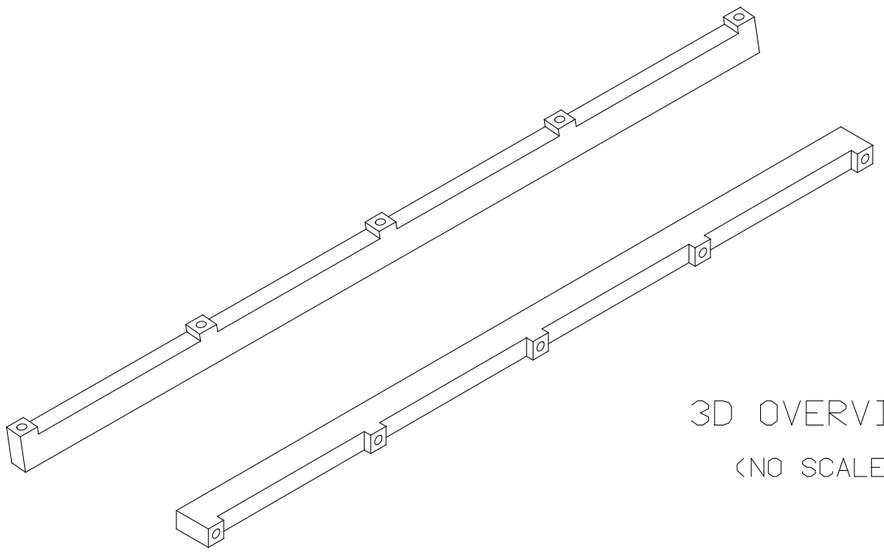

3D OVERVIEWS

(NO SCALE)

NOTES:

- MATERIAL : AL ALLOY 6061 T6 SPEC. QQ-A-250/11
- SURFACE TREATMENT : ALODINE 1200 SPEC. MIL-C-5541 CLASS 3
- REMOVE BURRS AND BREAK SHARP EDGES 0.5X45° ACC. TO DIN 6784
- HELI-COIL INSERTION DIRECTION
- INSERT HELI-COIL ACC. TO SPEC. GD-PR-CGS-060
- INSERT HELI-COIL AFTER SURFACE TREATMENT

REV	DATE	DRAWN	CHECK	ENG.	PR. ASS.	C. of C.	CHANGE AUTHORITY
/	23/05/2002	HIGHFTECH					

CUSTOMER ID

EFFECTIVITY

CARLO GAVAZZI SPACE

DRAWING TITLE

AMS 02 - CRATES

BOARD STIFFENER

SCALE 1:1

GEN. TOL. f ISO 2768 T1

GEN. RA. 3.2

CARLO GAVAZZI

HIGHER ASSEMBLY

DRAWING NUMBER 04-AMS-111.06.00

SHEET 1 OF 1

FILE DRAWING: BOARD_STIFFENER

All information contained in this document are property of CARLO GAVAZZI SPACE.
All rights reserved.