Sect 0.0 FINITE ELEMENT MODEL DESCRIPTION

0.0 Finite Element Model Description

Introduction

A finite element model of the AMS-02 payload was built to determine both the dynamic and static loads for all major structural components that make up the total payload. The model was built using both FEMAP 8.0 and MSC/NASTRAN. The actual dynamic and static analysis is performed using MSC/NASTRAN version 2001. The model is currently maintained on the ecf system at NASA/JSC. The actual directory where the model is currently located is shown in this report.

Most of the current stress analysis for the USS-02 and the Vacuum Case is based on the AMS-02 model version 6-02 and 6-02a. The USS-02 Center Body Joint and the Primary Sill Trunnion Joint analysis was done using the 11-02 AMS-02 model. A new loads comparison is performed each time that a new model is released to determine if there needs to be any revisions to the current stress analysis. Model updates are sent out with each new model release detailing the changes made from the previous version.

The final assessment of the loads for the VAR will be performed at a later time. The VLA load factors are expected to be lower than the design load factors.

Model Description

The full AMS-02 Model version 6-02a along with some sub components are shown in Figures 0.0-1 and 0.0-7. The element ranges and types are listed in Table 0.0-1 through Table 0.0- 7. The important locations in the model are the five trunnion attach locations, vacuum case to USS-02 attachments and the ISS-PAS attachment locations to the International Space Station truss segment. Various other attachments locations for the experiment components are represented in the model as well. The key interface locations are shown on Table 0.0-8.

The AMS-02 payload currently has an Orbiter manifest weight of 14809 lbs. The AMS-02 6-02a math model weighs 14997 lbs. The distribution of the mass is shown in Table 0.0-9 through Table 0.0-12 .

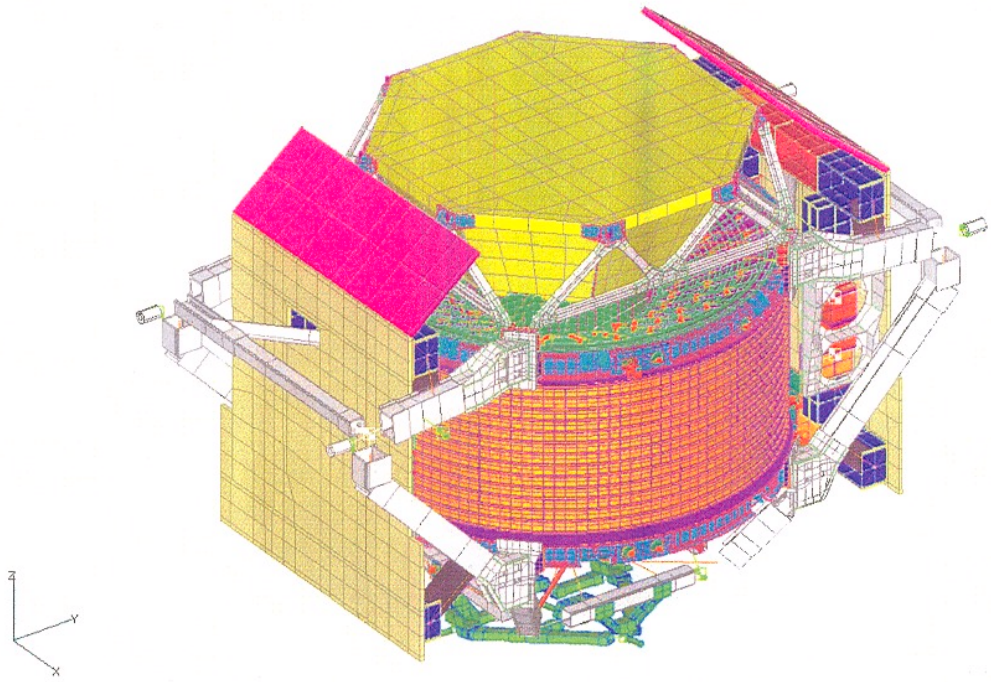

Figure 0.0-1: AMS-02 Model 6-02a

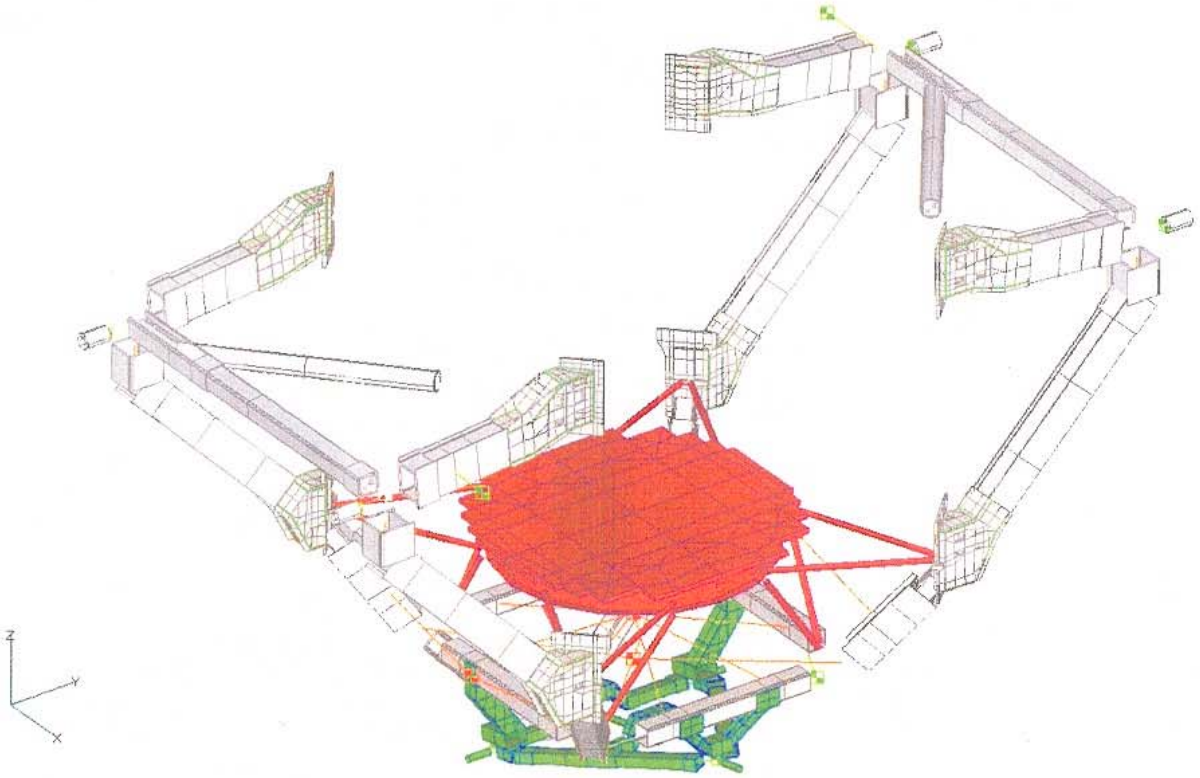

Figure 0.0-2: USS-02 with Payload Attach System (PAS) and Lower Time of Flight

Model Location and File Description

All of the different releases of the AMS-02 loads model are located on the ecf system at JSC. The directory location is:

/hsm/bsommer/ams/bulk/(*insert model version here*)

Model 6-02a is found in the directory /hsm/bsommer/ams/bulk/6-02a/ and contains the following files:

cord.dat	coordinate systems for nonlinear straps, USS-02, and Vacuum Case models
ip-uss-springs.dat	CBUSH elements that connect the vacuum case to the USS-02 at 10 locations, the lower USS-02 to the lower Vacuum Case Joint and the TRD to the upper Vacuum Case Joint.
ip-vc-springs.dat	CBUSH elements that connect the vacuum case to the interface plates.
magassy.dat	Magnet with full Helium Tank
magassyslosh.dat	Magnet with half full Helium Tank
magassyempty.dat	Magnet with empty Helium Tank
mpc2.dat - mpc8.dat	Magnet strap, Helium Tank and Vacuum Case connectivity equations for sub cases 2 through 8.
nlstraps.dat	nonlinear strap grids, elements, materials, property and temperature cards.
oc-vc-springs.dat	Vacuum Case Support Rings attachment to the Conical Flanges and Outer Cylinder.
parame.dat	Model parameters with empty Helium Tank center of gravity (CG) location
paramhf.dat	Model parameters with half-full Helium Tank CG location
pramf.dat	Model parameters with full Helium Tank CG location
preload.dat	strap preload force cards
radiators.dat	WAKE and RAM radiator model
spc1.dat -- spc8.dat	Model constraints for sub cases 1 thru 8.
trd.dat	Transition Radiation Detector (TRD) model
trdgas.dat	TRD Gas Supply Model
uss.dat	USS-02 model
vc.dat	Vacuum Case Model

Table 0.0-1: USS-02 Finite Element Numbering

USS-02		
Component	**Element Range**	**Element Type**
Upper Trunnion Bridge, Main Cross Section	1101-1112	CBEAM
Upper Trunnion Bridge, Upper VC Joint Insert	1117-1120	CBEAM
Upper Trunnion Bridge, Sill Joint Insert	1113-1116	CBEAM
Lower Trunnion Bridge, Main Cross Section	1201-1212	CBEAM
Lower Trunnion Bridge, Lower VC Joint Insert	1213-1216	CBEAM
Lower Trunnion Bride Elbow, Upper	1217-1220	CBEAM
Lower Trunnion Bride Elbow, Lower	1221-1224	CBEAM
Keel 4x4x1/4 7075 Tubes	1301-1303	CBEAM
Keel, Centerbody Stubs	1305-1306	CBEAM
Keel, Trunnion Joint Stubs	1307-1308	CBEAM
Trunnions	1401-1405	CBEAM
Lower Centerbody 4x4x1/4	1501-1517	CBEAM
Lower Diagonal Corner FLANGE BOX Beams	1601-1620	CBEAM
Lower USS to Upper USS joints	1605 1610 1615 1620	CBEAM
RBE's for Lower Centerbody Joints	1621-1624	RBE2
Sill Bridge 4x4x1/4,	1701-1704	CBEAM
Sill Bracket	1705-1706	CBEAM
Diagional Sill Bracket, I Section	1707-1709	CBEAM
Diagional Sill Bracket, Tube Section	1711-1712	CBEAM
Horizontal Diagonal Strut	1801-1804	CBEAM
RBE END A Upper Trunnioin Beridge to Upper VC JOINT	2001-2004	RBE2
RBE END B Upper Trunnioin Beridge to Upper VC JOINT	2011-2014	RBE2
RBE END A LOWER VC JOINT	2021-2024	RBE2
RBE END B LOWER VC JOINT	2031-2034	RBE2
UPPER VC JOINTS	3001-4304	CQUAD4, CTRIA3, CBAR
LOWER VC JOINTS	4401-5420	CQUAD4, CTRIA3, CBAR
RBE END B of LTB BEAM TO LOWER VC JT	2021-2024	RBE2
RBE END A of LTB BEAM TO LOWER VC JT	2031-2034	RBE3
RBE LOWER DIAGONAL BEAM TO LOWER VC JT	2041-2044	RBE4
MASSES	2101-2131	
Mass-Primary Block	2101-2102	CONM2
Mass-Secondary Block	2103-2104	CONM2
Joint Mass, 3#, upper VC interface	4305-4308	CONM2
Joint Mass, 3#, Lower VC interface	4309-4312	CONM2
Joint mass, 26#, Keel	2111	CONM2
Joint Mass, 54#, RICH/ECAL, forward	2112-2113	CONM2
Joint Mass, 45.55#, RICH/ECAL, aft	2114-2115	CONM2
Fastener Mass, 7#, lower diagonal	2124-2127	CONM2
Joint Mass, 3#,End Fittings for Diag. Strut	2120-2123	CONM2

Table 0.0-1 cont. : USS-02 Finite Element Numbering

COMPONENT	ELEMENT RANGE	ELEMENT TYPE
PAS Fasteners	2135-2138	CONM2
Sill Joint Fasteners	2139-2142	CONM2
Contengcy Weight	4313-4332	CONM2
RBE2 Connection at Primary	1901-1902	RBE2
RBE2 Connection at Secondary	1903-1904	RBE2
RBE2 Connection at Keel	1905	RBE2
TRD and Upper TOF RBE 's to Upper VC Joint	65061-65064	RBE2
UPPER INTERFACE MPC's TO USS RBE'S	65101-65104	MPC
LOWER INTERFACE MPC's TO USS RBE'S	65111-65114	MPC
UPPER USS TO VC IP CBUSH ELEMENTS	66001-66006	CBUSH
LOWER VC JOINT TO IP CBUSH ELEMENTS	66011-66014	CBUSH
LOWER USS TO LOWER VC JOINT CBUSH ELEMENTS	66041-66044	CBUSH
TRD and Upper TOF Interface CBUSH ELEMENTS	66061-66064	CBUSH
Upper Interface Plate RBE to CBUSH nodes	65001-65006	
Lower Interface Plate RBE to CBUSH nodes	65011-65014	
Lower USS to Lower CBUSH Nodes	65041-65044	
Lower CBUSH elemnt to Lower VC Joint Nodes	65051-65054	
Upper VC Joint to CBUSH for TRD and Upper TOF	66061-66064	
Upper TOF and TRD to CBUSH Nodes	65071-65074	
Upper CBUSH element to MPC nodes	65021-65026	
Lower CBUSH element to MPC nodes	65031-65034	
Upper MPC to RBE to USS Nodes	65101-65106	
Lower MPC to RBE to USS Nodes	65111-65114	
ISS Integration Hardware		
PAS		
PAS Beams	9001-9027	CBEAM
PAS Front Attachment Bracket (PLATE & Beams)	9217 9155-9283	CBEAM, CQUAD4
PAS Back Attachment Members (PLATE & Beams)	9001-9283	CBEAM, CQUAD4
PAS Trunnions	9032-9034	CBEAM
PAS Capture Bar	9035-9036	CBEAM
PAS Lumped Mass	9309-9311	CONM2
PAS RBE's	9042-9048 9285-9288	RBE2
Mass - UMA and RBE	9101-9102	CONM2
Mass- EVA Panel/ Panel A	9153	CONM2
Mass - ISS Camera	9103	CONM2
Mass - ROEU and RBE	9104-9105	CONM2
Mass - Debree Shields	9106-9113	CONM2

Table 0.0-1 cont. : USS-02 Finite Element Numbering

COMPONENT	ELEMENT RANGE	ELEMENT TYPE
Mass- EVA Handrails	9313	CONM2
Mass - FGRF	9601	CONM2
Mass - PVGRF + Bracket Mass	9312, 9602	CONM2
Mass - Scuff Plates	9701-9704	CONM2

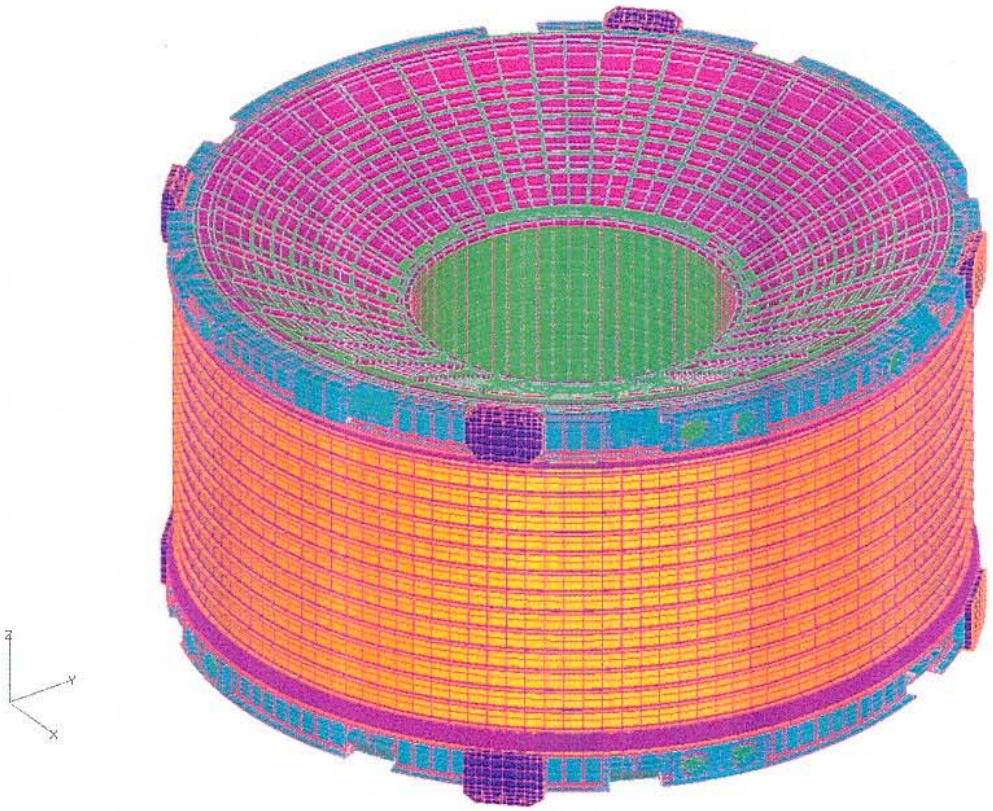

Figure 0.0-3: AMS -02 Vacuum Case Loads Model

Table 0.0-2: Vacuum Case Element Numbering

VACUUM CASE		
Component	Element Range	Element Type
UPPER FLANGE .08" PLATE	10001-11128	CQUAD4
UPPER FLANGE .5" PLATE	11129-11256	CQUAD4
UPPER FLANGE .736" PLATE	11257-11320	CQUAD4
UPPER FLANGE TPR .08"-.827" PLATE	11321-11328	CQUAD4
UPPER FLANGE .827 th PLATE	11329-11336	CQUAD4
UPPER FLANGE TPR .08"-.5" PLATE	11337-11400	CQUAD4
UPPER FLANGE 1.022"x.1" BEAM	11401-11976	CBEAM
UPPER FLANGE TPR .1" BEAM	11977-12041	CBEAM
UPPER FLANGE TPR .735"-.41" PLATE	12042-12049	CQUAD4
UPPER FLANGE TPR BOSS BEAM	12050-12081	CBEAM
UPPER FLANGE .174" PLATE	12082-12137	CQUAD4
UPPER FLANGE TPR .174"-.08" PLATE	12138-12193	CQUAD4
UPPER FLANGE 1ST STEP BEAM	12194-12249	CBEAM
UPPER FLANGE 2ND STEP BEAM	12250-12305	CBEAM
UPPER FLANGE INNER RADIUS BEAM	12306-12369	CBEAM
UPPER FLANGE MASSLESS BAR	12370-13319	CBAR
UPPER FLANGE CIRC. RIBS BEAM	13320-13703	CBEAM
UPPER FLANGE TRACKER RBE'S	13704-13743	RBE2
LOWER FLANGE .08" PLATE	70001-71128	CQUAD4
LOWER FLANGE .5" PLATE	71129-71256	CQUAD4
LOWER FLANGE .736" PLATE	71257-71320	CQUAD4
LOWER FLANGE TPR .08"-.827" PLATE	71321-71328	CQUAD4
LOWER FLANGE .827 th PLATE	71329-71336	CQUAD4
LOWER FLANGE TPR .08"-.5" PLATE	71337-71400	CQUAD4
LOWER FLANGE 1.022"x.1" BEAM	71401-71976	CBEAM
LOWER FLANGE TPR .1" BEAM	71977-72041	CBEAM
LOWER FLANGE TPR .735"-.41" PLATE	72042-72049	CQUAD4
LOWER FLANGE TPR BOSS BEAM	72050-72081	CBEAM
LOWER FLANGE .174" PLATE	72082-72137	CQUAD4
LOWER FLANGE TPR .174"-.08" PLATE	72138-72193	CQUAD4
LOWER FLANGE 1ST STEP BEAM	72194-72249	CBEAM
LOWER FLANGE 2ND STEP BEAM	72250-72305	CBEAM
LOWER FLANGE INNER RADIUS BEAM	72306-72369	CBEAM
LOWER FLANGE MASSLESS BAR	72370-73319	CBAR
LOWER FLANGE CIRC. RIBS	73320-73703	CBEAM
LOWER FLANGE TRACKER RBE'S	73704-73743	RBE2
UPPER IP 1" SOLID	13800-14391	CHEXA, CPENTA, CTETRA
LOWER IP 1" SOLID	14400-14999	CHEXA, CPENTA, CTETRA
OC .375" PLATE	16001-16512	CQUAD4
OC RING 1 0.250" PLATE	16513-16768	CQUAD4

Table 0.0-2: Vacuum Case Element Numbering Cont.

COMPONENT	ELEMENT RANGE	ELEMENT TYPE
OC RING 2 0.232" PLATE	16769-17024	CQUAD4
OC RING 3 0.213" PLATE	17025-17280	CQUAD4
OC RING 4 0.199" PLATE	17281-17536	CQUAD4
OC RING 5 0.187" PLATE	17537-17792	CQUAD4
OC RING 6 0.177" PLATE	17793-18048	CQUAD4
OC RING 7 0.169" PLATE	18049-18304	CQUAD4
OC RING 8 0.161" PLATE	18305-18560	CQUAD4
OC RING 9 0.154" PLATE	18561-18816	CQUAD4
OC RING 10 0.149" PLATE	18817-19072	CQUAD4
OC RING 11 0.148" PLATE	19073-19328	CQUAD4
OC RING 12 0.149" PLATE	19329-19584	CQUAD4
OC RING 13 0.156" PLATE	19585-19840	CQUAD4
OC RING 14 0.169" PLATE	19841-20096	CQUAD4
OC RING 15 0.196" PLATE	20097-20352	CQUAD4
OC FLANGE RADIUS BEAM	20353-20608	CBEAM
OC .365"x.353" BEAM	20609-20864	CBEAM
OC RIB 1 BEAM	20865-20992	CBEAM
OC RIB 2 BEAM	20993-21120	CBEAM
OC RIB 3 BEAM	21121-21248	CBEAM
OC RIB 4 BEAM	21249-21376	CBEAM
OC RIB 5 BEAM	21377-21504	CBEAM
OC RIB 6 BEAM	21505-21632	CBEAM
OC RIB 7 BEAM	21633-21760	CBEAM
OC RIB 8 BEAM	21761-21888	CBEAM
OC RIB 9 BEAM	21889-22016	CBEAM
OC RIB 10 BEAM	22017-22144	CBEAM
OC RIB 11 BEAM	22145-22272	CBEAM
OC RIB 12 BEAM	22273-22400	CBEAM
OC RIB 13 BEAM	22401-22528	CBEAM
OC RIB 14 BEAM	22529-22656	CBEAM
OC MASSLESS BAR	22657-26496	CBAR
IC .25" PLATE	27001-27128	CQUAD4
IC TPR .25"-.125" PLATE	27129-27256	CQUAD4
IC .125" PLATE	27257-28216	CQUAD4
IC MASSLESS BAR	28217-29432	CBAR
UPPER SR .25" PLATE	30001-31049	CQUAD4
UPPER SR .164" PLATE	31050-31607	CQUAD4
UPPER SR SOLID SECTION BEAM	31608-31643	CBEAM
UPPERSR .75" PLATE	31644-32376	CQUAD4
UPPER SR .25" RADIUS BEAM	32375-32531	CBEAM
UPPER SR .5" RADIUS BEAM	32532-32602	CBEAM
UPPER SR .50" PLATE	32603-32807	CQUAD4

Table 0.0-2: Vacuum Case Element Numbering Cont.

COMPONENT	ELEMENT RANGE	ELEMENT TYPE
UPPER SR 1.859" PLATE	32808-33243	CQUAD4
UPPER SR OC BEAM FOR J SECTION	33244-33419	CBEAM
UPPER SR MASSLESS BAR	33420-33898	CBAR
UPPER SR PORT SIDE BEAMS	33899-33992	CBEAM
UPPER SR PORT TOP & BOTTOM BEAMS	33993-34024	CBEAM
UPPER SR POCKETS 0.375"	34025-34141	CQUAD4
LOWER SR .25" PLATE	34142-35234	CQUAD4
LOWER SR .164" PLATE	35235-35805	CQUAD4
LOWER SR SOLID SECTION BEAM	35806-35841	CBEAM
LOWER SR .75" PLATE	35842-36536	CQUAD4
LOWER SR .25" RADIUS BEAM	36537-36699	CBEAM
LOWER SR .5" RADIUS BEAM	36700-36764	CBEAM
LOWER SR 0.5" PLATE	36765-36962	CQUAD4
LOWER SR 1.859" PLATE	36963-37311	CQUAD4
LOWER SR OC BEAM FOR J SECTION	37312-37493	CBEAM
LOWER SR MASSLESS BAR	37494-37973	CBAR
LOWER SR PORT SIDE BEAMS	37974-38054	CBEAM
LOWER SR PORT TOP & BOTTOM BEAMS	38055-38083	CBEAM
LOWER SR POCKETS 0.375"	38084-38231	CQUAD4
CONM2 LUMPED MASS Upper SR	39001-39008	CONM2
CONM2 LUMPED MASS Lower SR	39009-39016	CONM2
Upper SR Fastener OC RBE's	39101-39228	RBE2
Lower SR Fastener OC RBE's	39301-39428	RBE2
Upper SR Fastener Flange RBE's	39501-39564	RBE2
Lower SR Fastener Flange RBE's	39601-39664	RBE2
Upper Flange to SR CBUSH Elements	39701-39764	CBUSH
Lower Flange to SR CBUSH Elements	39801-39864	CBUSH
Upper OC to SR CBUSH Elements	40001-40128	CBUSH
Lower OC to SR CBUSH Elements	40201-40328	CBUSH
UPPER SR RBE'S	60001-61054	RBE2
LOWER SR RBE'S unless otherwise noted	65115-65997	RBE2
UPPER FLANGE TO IC AND TRACKER STEP RBE'S	62083-62226	RBE2
LOWER FLANGE TO IC AND TRACKER STEP RBE'S	62227-62373	RBE2
UPPER VC TO INTERFACE SPRINGS RBE'S	62001-62004	RBE2
LOWER VC TO INTERFACE SPRINGS RBE'S	62011-62014	RBE2
UPPER INTERFACE SPRINGS TO IP RBE'S	63001-63004	RBE2
LOWER INTERFACE SPRINGS TO IP RBE'S	63011-63014	RBE2
UPPER VC TO IP CBUSH ELEMENTS	64001-64004	CBUSH
LOWER VC TO IP CBUSH ELEMENTS	64011-64014	CBUSH
CONTENGY MASS ON RINGS	64201-64216	CONM2
UPPER IP TO INTERFACE SPRINGS RBE'S	65001-65004	RBE2

Table 0.0-2: Vacuum Case Element Numbering Cont.

COMPONENT	ELEMENT RANGE	ELEMENT TYPE
Upper RBE Connection, Horizontal Diagonal Strut	65005-65006	RBE2
CONNECTION OF USS-02 TO VACUUM CASE		
LOWER IP TO INTERFACE SPRINGS RBE'S	65011-65014	RBE2
UPPER VC TO CBUSH Nodes	40001-40004	
LOWER VC TO CBUSH Nodes	40011-40014	
UPPER CUBSH TO IP Nodes	40101-40104	
LOWER CBUSH TO IP Nodes	40111-40114	
Top Flange Nodes	11001-12828	
Bottom Flange Nodes	12829-14659	
OC Nodes	15001-19480	
IC Nodes	20001-21281	
USS Interface Nodes	22001-22304	
Upper Support Ring Nodes	25001-28597	
Lower Support Ring Nodes	28601-32171	
Upper & LowerInterface Plate Nodes	37001-39136	
Magnet Interface Nodes	10101-10116	
Tracker Mass Nodes	10201-10216	
Upper Flange Fastener Nodes	32201-32264	
Upper Flange Contact to SR Nodes	32301-32364	
Upper Flange to Inner Cylinder Nodes	32401-32464	
Upper Flange Outer Tracker Diameter Nodes	32501-32564	
Lower Flange Fastener Nodes	32601-32664	
Lower Flange Contact to SR Nodes	32701-32764	
Lower Flange to Inner Cylinder Nodes	32801-32864	
Lower Flange Outer Tracker Diameter Nodes	32901-32964	
Upper OC Fastener to SR Nodes	33001-33128	
Upper OC Mid Rbe's to Upper SR Nodes	33201-33328	
Upper OC Inner Diameter to Upper SR Nodes	33401-33528	
Lower OC Fastener to SR Nodes	33601-33728	
Lower OC Mid Rbe's to Lower SR Nodes	33801-33928	
Lower OC Inner Diameter to Lower SR Nodes	34001-34127	
Upper SR Fastener to OC Nodes	35001-35128	
Lower SR Fastener to OC Nodes	35601-35728	
Upper SR Fastener to Flange Nodes	35801-35864	
Lower SR Fastener to Flange Nodes	35901-35964	
Upper SR Coincident Nodes for CBUSH OC	36001-36128	
Lower SR Coincident Nodes for CBUSH OC	36201-36328	
Upper SR Coincident Nodes for CBUSH to Flange	36401-36464	

Table 0.0-2: Vacuum Case Element Numbering Cont.

COMPONENT	ELEMENT RANGE	ELEMENT TYPE
Lower SR Coincident Nodes for CBUSH to Flange	36501-36564	
Joint Mass, 5#, horizontal diagonal lug	2109-2110	CONM2

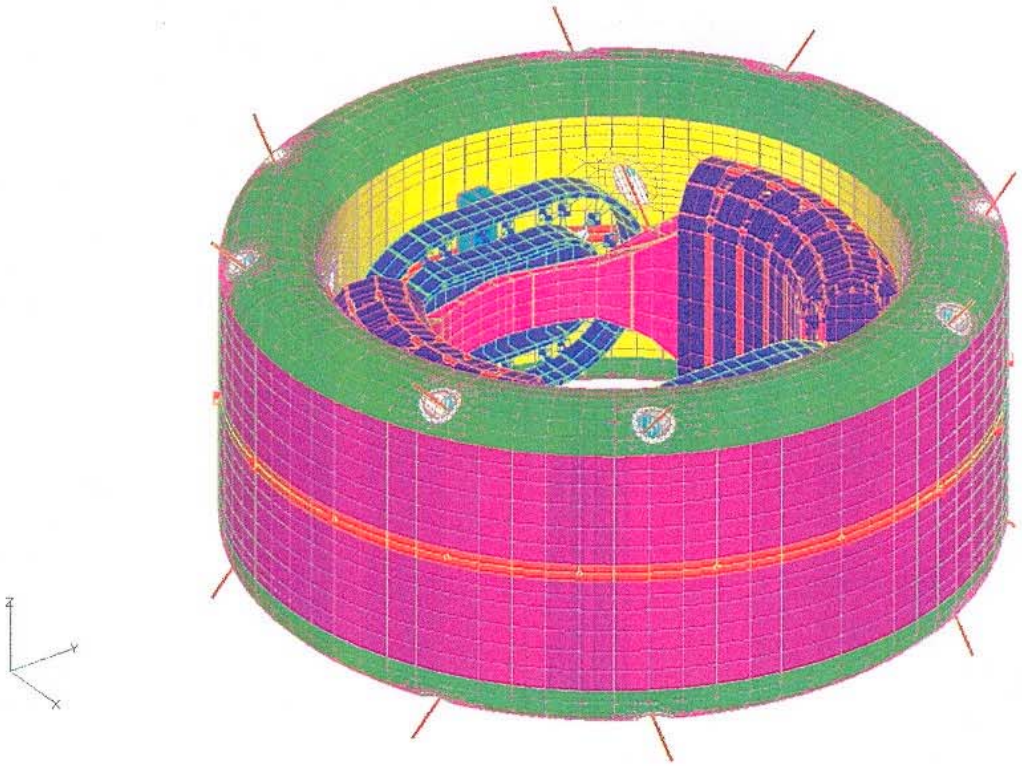

Figure 0.0-4: Magnet and He Tank Assembly

Table 0.0-3: Various Experiment Components Located in USS-02 and Vacuum Case Models

VARIOUS EXPERIMENT COMPONENTS		
Component	**Element Range**	**Element Type**
e-CAL, slotted connection modeled -	53001-53002	CONM2, RBE3
Tracker	54001-54016	CONM2
Tracker Cables	54201-54392	CONM2
ACC	54101-54108	CONM2
Electronics	57001-57008	CONM2
RICH	50001-50002	CONM2, RBE3
TOF, TRD ATTACHMENT	58001	CONM2, RBE3
TOF, BOTTOM HONEYCOMB, C CHANNELS	58002-58086	CBEAM
TOF, BOTTOM ATTACHMENT STRUTS	58087-58102	CBEAM
CAB	55003-55004	CONM2
Ther/Rad	56001-56013	CONM2
Magnet Avionics	59001-59027	CONM2
Magnet Avionics 20 lbs +RBE3	59028-59029	CONM2
Magnet Avionics 10 lbs+ RBE3's	59030-59033	CONM2
Magnet Avionics 5 lbs	59034-59041	CONM2
CVB	56109	CONM2
Cryo. Coolers	59051-59054	CONM2
Star Tracker	56116	CONM2
Lower WAKE and RAM Radiators with RBE's	56119-56122	CONM2, RBE3
Busbars, cabels, vent pump	56116	CONM2
TTCS	56112-56113	CONM2
Additional AMS Mass	56101-56108	CONM2

Table 0.0-4: Magnet and He Tank Element Numbering

MAGNET AND HE TANK		
Component	**Element Range**	**Element Type**
Straps	90001-90016	CROD
Strap connection to Magnet, RBE's	94163-94180	MPC
Magnet Elements	91001-99724	CBEAM, CQUAD4, CTIRA3
Magnet Contengency Weight	99801-99804	CONM2
He Tank Portion		
Outer Cylinder (OC) Plates	100001-100864	CQUAD4
OC Ribs	100865-101224	CBEAM
Inner Cylinder (IC) Plates	101225-102936	CQUAD4
IC Ribs	102937-103368	CBEAM
Top and Bottom Caps	103369-105552	CQUAD4, CTRIA3, CBAR
Strap Tubes	105553-109160	CQUAD4, CTRIA3, CBAR
Massless Bars	109161-112425	CBAR
Helium Mass	112426-112497	CONM2
Support Ring (SR) Beam	112498-112645	CBEAM
SR Plate	112646-112949	CQUAD4
SR Spokes	112950-112985	CBEAM
RBE3's for He Mass	112986-113057	RBE3
SR Lumped Mass	113061-113096	CONM2
Y Struts	114001-114002	CROD
He Tank Nodes	100001-107133	
Helium Nodes	112001-112072	
Magnet Attachment Nodes	100001-100108	

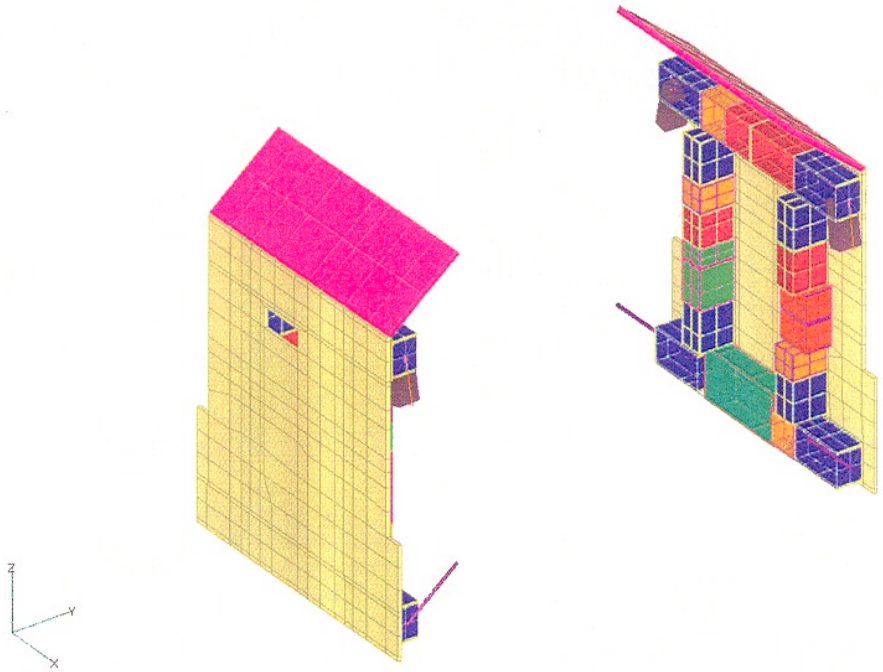

Figure 0.0-5: WAKE and RAM Radiator Model

WAKE AND RAM RADIATORS		
Component	**Element Range**	**Element Type**
WAKE Honeycomb	120001-120261	CQUAD4 (LAMINATE)
RAM Honeycomb	120301-120550	CQUAD4 (LAMINATE)
Crate Plate Elements	120601-121615	CQUAD4
Crate Beam Elements	120701-122322	CBEAM
Tracker Radiators	122401-122432	CQUAD4 (LAMINATE)
Mass Elements	122501-122543	CONM2
RBE's for Lower Centerbody Joints	122601-122928	RBE2
Radiator Nodes	120001-121952	

Table 0.0-5: WAKE and RAM Radiator Loads Model Element Numbering

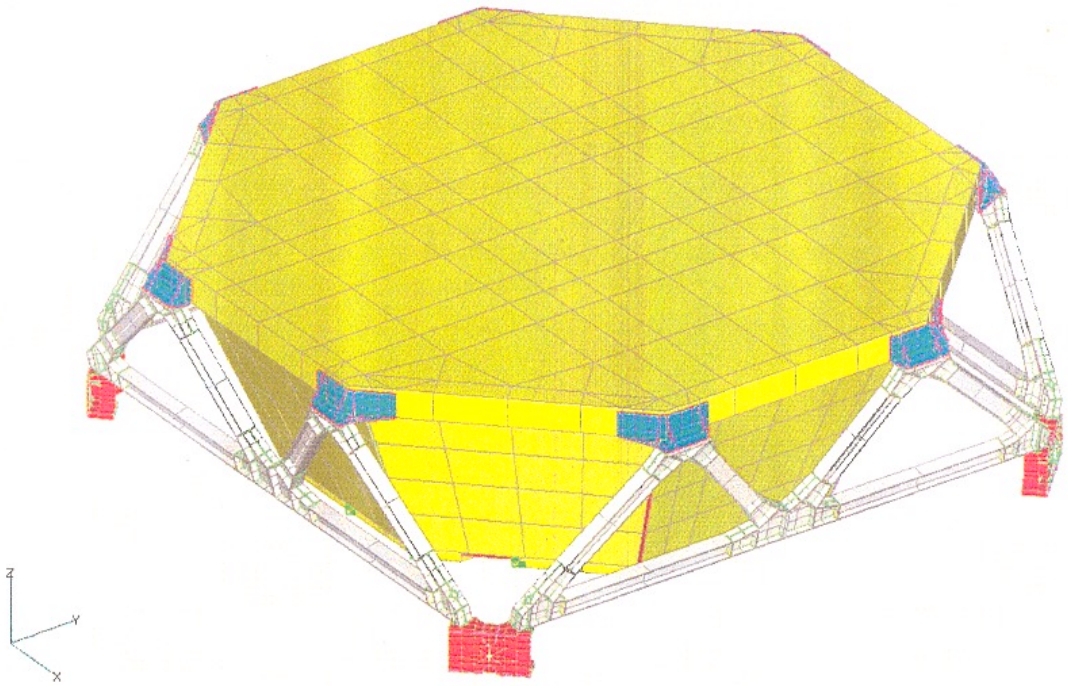

Figure 0.0-6: TRD Loads Model

Table 0.0-6: TRD Loads Model Element Numbering

TRD		
Component	**Element Range**	**Element Type**
M Structure Beams	130001-130048	CBEAM
M Structure Plates	130049-131648	CQUAD4
M Structure Massless Bars	131651-132726	CBAR
Top Bracket Plates	133001-133552	CBEAM
Top Bracket Bars	133561-132726	CBAR
Top Pannel CID 130001	133801-133976	CQUAD4 (LAMINATE)
Side Panel 1 CID 130003	134001-134024	CQUAD4 (LAMINATE)
Side Panel 2 CID 130004	134025-134040	CQUAD4 (LAMINATE)
Side Panel 3 CID 130005	134041-134064	CQUAD4 (LAMINATE)
Side Panel 4 CID 130006	134065-134080	CQUAD4 (LAMINATE)
Side Panel 5 CID 130007	134081-134104	CQUAD4 (LAMINATE)
Side Panel 6 CID 130008	134105-134120	CQUAD4 (LAMINATE)
Side Panel 7 CID 130008	134121-134144	CQUAD4 (LAMINATE)
Side Panel 8 CID 130010	134145-134160	CQUAD4 (LAMINATE)
Bottom Panel CID 130002	134201-134316	CQUAD4 (LAMINATE)
USS Interface RBE's	134651-134654	RBE2
Massless Bars for Octogon	134661-134692	CBAR
Other RBE's	134401-134640	RBE2
Corner Bracket Plates	136001-136416	CQUAD4, CTRIA3
Corner Bracket Bars	136421-136612	CBAR
Corner Bracket RBE's	136621-136644	RBE2
UTOF Interface RBE's	136651-136658	RBE2
Node ID's	130001-133271	
USS Interface Nodes	65061-65064	

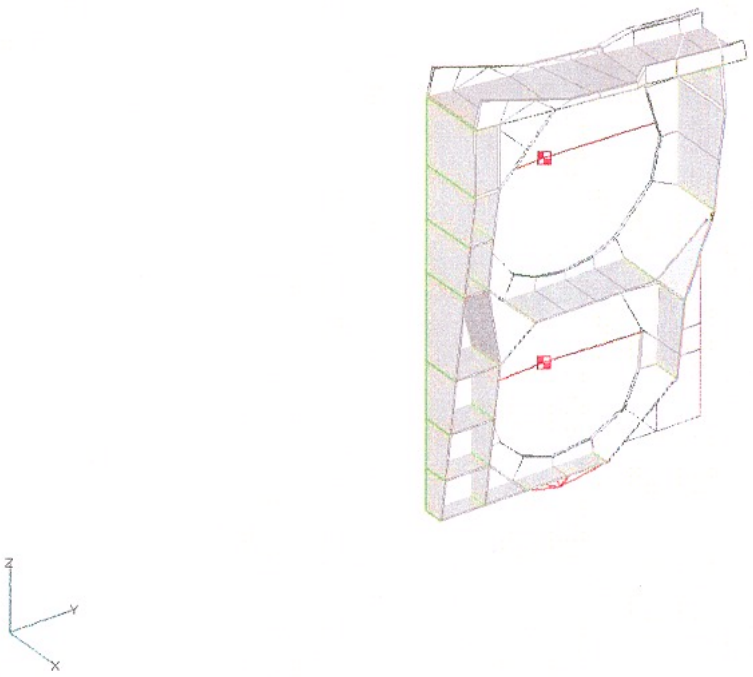

Figure 0.0-7: TRD Gas Supply Loads Model

TRD GAS SUPPLY		
Component	**Element Range**	**Element Type**
Sbox Plates, Bars, RBE's, Concentrated Masses	140001-140241	CQUAD4, CTRIA3, CBAR, RBE2, RBE3, CONM2

Table 0.0-7: TRD Gas Supply Model Numbering

Table 0.0-8: Key Interface Grid Locations

NODE ID	LOCATION
1	Primary Trunnion, Forward Starboard
2	Primary Trunnion, Forward Port
3	Secondary Trunnion, Aft Starboard
4	Secondary Trunnion, Aft Port
5	Keel Trunnion
65071-65074	TRD to Upper Vacuum Case Joint (USS-02 Side)
65061-65064	TRD to Upper Vacuum Case Joint (TRD Side)
40001-40004	Vacuum Case to Interface Plates (Vacuum Case Side)
40101-40104	Vacuum Case to Interface Plates (Interface Plate Side)
65101-65106	Interface Plate to Upper Vacuum Case Joint (Interface Plate Side)
65021-65026	Interface Plate to Upper Vacuum Case Joint (Spring Element)
65001-65006	Interface Plate to Upper Vacuum Case Joint (USS-02 Side)
65111-65114	Interface Plate to Lower Vacuum Case Joint (Interface Plate Side)
65031-65034	Interface Plate to Lower Vacuum Case Joint (Spring Element)
65011-65014	Interface Plate to Lower Vacuum Case Joint (USS-02 Side)
65051-65054	Lower USS-02 to Lower Vacuum Case Joint (Lower Vacuum Case Joint Side)
65041-65044	Lower USS-02 to Lower Vacuum Case Joint (Lower USS-02 Side)

Table 0.0-9: AMS-02 Experiment Weight

AMS EXPERIMENT WEIGHT	CONTROL WEIGHT (lbs)	MODEL 6-02 WEIGHT (lbs)	HOW WEIGHT IS MODELED
ANTICOINCIDENCE COUNTER (ACC) (w/ STRUCTURE TO VC)	117	117	Concentrated Mass Elements
TRACKER	403	403	Concentrated Mass Elements
TIME OF FLIGHT (TOF) (BOTH UPPER & LOWER)	525	525	RBEs, Concentrated Masses, Beam and Laminate Elements
TRANSITION RADIATION DETECTOR (TRD)	723	723	RBEs, Concentrated Masses, Beam, Bar, Laminate and Plate Elements
TRD GAS SUPPLY SYSTEM	258	258	RBEs, Concentrated Masses, Bar, Spring and Plate Elements
RING IMAGING CHERENKOV COUNTER (RICH)	406	406	RBE3, Concentrated Mass Elements
ELECTROMAGNETIC CALORIMETER (ECAL)	1407	1407	RBE3, Concentrated Mass Elements
ALL AVIONICS CRATES	1014	1177	RBE3, Concentrated Masses, Bar, Spring and Plate Elements
CRYOMAGNET SYSTEM	5196	5233	RBEs, Concentrated Masses, Bar, Spring and Plate Elements
THERMAL CONTROL SYSTEM (TCS)	686	554	RBEs, Concentrated Masses, Beam, Rod and Laminate Elements
CONTINGENCY	247	368	Concentrated Mass Elements
AMS EXPERIMENT HARDWARE TOTAL:	10982	11171	

Table 0.0-10: Space Shuttle Integration Hardware Weight

SPACE SHUTTLE INTEGRATION HARDWARE	CONTROL WEIGHT (lbs)	MODEL 6-02 WEIGHT (lbs)	HOW THE WEIGHT IS MODELED
UNIQUE SUPPORT STRUCTURE - 02 (USS-02)	1571	1602	RBEs, Beams, Bars, Plates Concentrated Mass Elements
CRYOMAGNET VACUUM CASE (VC)	1508	1598	RBEs, Beams, Bars, Plates, Solids Concentrated Mass Elements
BRACKETS, MISC. FASTENERS & HARDWARE, SAFETY WIRE	23	23	Concentrated Mass Elements
THERMAL BLANKETS	35	35	Concentrated Mass Elements
ADDITIONAL WEIGHT	121	0	
SHUTTLE INTEGRATION HARDWARE TOTAL:	3259	3258	

Table 0.0-11: ISS Integration Hardware Weight

ISS INTEGRATION HARDWARE	CONTROL WEIGHT (LBS)	MODEL 6-02 WEIGHT (LBS)	HOW THE WEIGHT IS MODELED
ISS PAS/UMA INTERFACE HARDWARE WITH CABLES	203	203	RBEs, Beams, Plates and Concentrated Mass Elements
GRAPPLE FIXTURES (1 FRGF & 1 PVGF) & BRACKETS	131	131	RBEs and Concentrated Mass Elements
MICROMETEORITE/ORBITAL DEBRIS (M/OD) SHIELDS & SUPPORTS	102	102	RBEs and Concentrated Mass Elements
EVA CONNECTOR PANEL, SCUFF PLATES & BRACKETS	55	55	RBEs and Concentrated Mass Elements
PAYLOAD DISCONNECT ASSEMBLY (PDA)	36	36	RBEs and Concentrated Mass Elements
EVA HANDRAILS & PORTABLE FOOT RESTRAINT (PFR) INTERFACE	16	16	RBEs and Concentrated Mass Elements
BERTHING CAMERA SYSTEM (BCS) WITH MOUNTING BRACKETS & CABLES	25	25	Concentrated Mass Element
ISS INTEGRATION HARDWARE TOTAL:	568	568	

Table 0.0-12: AMS-02 Total Weight Summary

TOTAL AMS-02 WEIGHT SUMMARY	CONTROL WEIGHT (LBS)	MODEL 6-02 WEIGHT (LBS)
AMS EXPERIMENT HARDWARE TOTAL:	525	525
SHUTTLE INTEGRATION HARDWARE TOTAL:	1571	1602
TOTAL EXPERIMENT & SHUTTLE INTEGRATION HARDWARE WEIGHT:	2096	2127
ISS INTEGRATION HARDWARE TOTAL:	36	36
TOTAL PAYLOAD WEIGHT:	14809	14997

Section 1.1.1 CONICAL FLANGE

Prepared By	Name/Date SaikeWang 1/03/03	LOCKHEED MARTIN	Page/Section No. 1.1.1 - 1	File Name Flanges
Checked By	1/14/03	ENGINEERING & SCIENCES *Hardware Development & Integration Dept.*	Drawing No.	
Title	**Conical Flanges - AMS02, SEG39135778**			

The Stress Analysis of the Conical Flanges

1. Introduction of the Conical Flanges

   The Figure on Page 6 shows the Conical Flanges. The section view of the assembly on Page 7 shows how the Conical flanges are assembled within the Vacuum Case System.

   The design of the Flange Skin is 0.095 inch thick. The Radial Ribs are 0.983 inch high with the thickness of 0.14 inch. The Circle Ribs are 0.491 inch high with the thickness of 0.135 inch. Some of the details show on Page 8.

2. The Method Used to Perform the Stress Analysis of the Conical Flanges

   The FEA math models of the Flanges were made using FEMAP software. The FEA models of the Flanges consist of the CQUAD4, CTRIA3, and also RBE's of SPC/MPC. Then, the models of the Flanges were connected to the whole FEA model of AMS02 by RBE2s. The solutions of the Flange FEA math models are obtained from running the NASTRAN model. The modifications, design changes, and engineering judgments were made based on these solutions. The NASTRAN was run several times when a final solution was reached.

3. The information of the Flange FEA models and assumptions

   When the NASTRAN was run for the Flange FEA models, the assumptions were made that the rest of the FEA math models are correct; the connections, which put the Flange math models on the Support Rings and Inner Cylinder are correct; all the boundary conditions including the constrains and loading cases are correct. In other words, the stress analysis of the Conical Flanges only focuses on the Flange FEA math model itself.

Pages 9 - 10 of the report show how the Flange math models are within the Vacuum Case FEA models. Page 11 shows the FEA models of the Conical Flanges by hiding the math models of the Outer Cylinder, Inner Cylinder, and Support Rings.

The NASTRAN data file of the Conical Flanges is put under the directory:
/hsm/bsommer/ams/bulk/3-01, and named as "vc-hifi.dat" on May 7, 2001.

The results of the Flange model check for the KGG, KNN, KAA and Six Rigid Body Modes are listed below. The math model has nothing to do with the A-set reduction. Therefore, the KNN shall be same as the KAA. The results give confidence that the flange model is correct because the underlined translation values of each matrix are less than E-05, and the underlined rotation values of each matrix are less than E-03. The first six modes are very close to zero and transition modes are well separated. The more details of the output for the model check of the flanges are attached in Appendix A. The output file of NASTRAN for the flange model check is put under the directory:
/hsm/bsommer/ams/checks/3-01, and named as "checkamsflanges.f06" on May 7, 2001.

MATRIX CHECK KGG - 6 X 6 SQUARE MATRIX

-8.4800D-07	5.6607D-08	-2.4359D-08	-5.6598D-06	-7.7791D-06	-5.0772D-06
-8.7993D-08	**-2.1127D-08**	6.0552D-08	1.7569D-05	-1.6976D-07	-3.5314D-05
-9.6800D-09	1.2030D-08	**4.6775D-07**	-1.0982D-05	-1.7730D-05	7.1068D-06
-4.0676D-07	1.3530D-05	-1.5092D-05	**-4.6816D-04**	9.8786D-04	-9.4268D-05
-1.5214D-05	-4.6048D-06	-8.5047D-07	1.8870D-04	**-7.0571D-04**	1.1854D-04
-2.5233D-05	-3.5430D-05	8.8610D-06	-5.5004D-05	-4.4023D-04	**-5.2839D-03**

Prepared By	Name/Date Saike Wang 1/03/03	LOCKHEED MARTIN	Page/Section No. 1.1.1-2	File Name Flanges
Checked By	1/14/03	ENGINEERING & SCIENCES *Hardware Development & Integration Dept.*	Drawing No.	
Title	**Conical Flanges - AMS02, SEG39135778**			

MATRIX CHECK KNN - 6 X 6 SQUARE MATRIX.

-8.2943D-07	-1.2442D-07	4.4710D-08	1.6216D-05	-3.5647D-05	4.4811D-05
6.7537D-07	**2.3723D-07**	6.8612D-09	2.5061D-05	-8.0928D-06	-1.4793D-05
-3.5929D-09	-1.6223D-08	**2.1329D-08**	-1.0320D-05	-1.9622D-05	1.1193D-05
-9.7322D-06	3.4268D-05	-2.1670D-06	**-8.0765D-05**	-2.5649D-03	-7.2146D-04
-2.7887D-05	-1.6477D-05	-1.8767D-05	3.1161D-03	**-2.4291D-03**	-2.4835D-04
7.9334D-06	-2.6788D-05	8.5138D-06	-8.3960D-04	-5.5407D-04	**-3.5242D-03**

MATRIX CHECK KAA - 6 X 6 SQUARE MATRIX.

-8.2943D-07	-1.2442D-07	4.4710D-08	1.6216D-05	-3.5647D-05	4.4811D-05
6.7537D-07	**2.3723D-07**	6.8612D-09	2.5061D-05	-8.0928D-06	-1.4793D-05
-3.5929D-09	-1.6223D-08	**2.1329D-08**	-1.0320D-05	-1.9622D-05	1.1193D-05
-9.7322D-06	3.4268D-05	-2.1670D-06	**-8.0765D-05**	-2.5649D-03	-7.2146D-04
-2.7887D-05	-1.6477D-05	-1.8767D-05	3.1161D-03	**-2.4291D-03**	-2.4835D-04
7.9334D-06	-2.6788D-05	8.5138D-06	-8.3960D-04	-5.5407D-04	**-3.5242D-03**

EIGENVALUE ANALYSIS SUMMARY (READ MODULE)

MODE NO.	EXTRA. ORDER	EIGENVALUE	RADIANS	CYCLES	GENERALIZED MASS	GENERALIZED STIFFNESS
1	1	7.346718E-08	2.710483E-04	4.313868E-05	1.000000E+00	7.346718E-08
2	2	1.741550E-07	4.173189E-04	6.641836E-05	1.000000E+00	1.741550E-07
3	3	2.010880E-07	4.484284E-04	7.136959E-05	1.000000E+00	2.010880E-07
4	4	2.410430E-07	4.909613E-04	7.813892E-05	1.000000E+00	2.410430E-07
5	5	3.412148E-07	5.841359E-04	9.296812E-05	1.000000E+00	3.412148E-07
6	6	3.685538E-07	6.070863E-04	**9.662079E-05**	1.000000E+00	3.685538E-07
7	7	7.302433E+02	2.702301E+01	**4.300846E+00**	1.000000E+00	7.302433E+02

WEIGHT SUMMARY

DIRECTION	MASS	X-C.G.	Y-C.G.	Z-C.G.
X	3.677921E+01	-4.980716E-17	3.396014E-02	-3.702117E-02
Y	3.679269E+01	2.039517E-04	4.677141E-17	-3.471487E-02
Z	3.677921E+01	1.410616E-04	3.396527E-02	-7.414474E-17

I(S)

9.223871E+04	-2.808297E+02	2.212755E+02
-2.808297E+02	6.513497E+04	8.145423E+02
2.212755E+02	8.145423E+02	8.321372E+04

I(Q)

6.509564E+04		
	8.324427E+04	
		9.224748E+04

Q

9.972480E-03	-2.595862E-02	9.996133E-01
-9.989467E-01	4.451689E-02	1.112187E-02
-4.478838E-02	-9.986713E-01	-2.548733E-02

Total weight = 386.0886 x Mass = 14200 lbf
The actual hardware is 14187 lbf (ref. VC 3-01)

4. The Loads and Constrains.

   The VC FEA assembly math model is connected with the USS-02 FEA math models. The entire AMS02 FEA math model is constrained at the five Trunion locations.

   A number of load cases under the launch and landing conditions were investigated in order to identify the worst load cases. Based on these investigation, the worst ones were Load Cases R1016, R1032 and R2016 under the landing cold condition.

   The Load Factors for R1016, R1032 and R2016 are listed below. The Load Factors are applied at the C.G. of the entire AMS02 math model when we run NASTRAN. The Load Factors are taken from Table 4.1 of Page 16 in AMS02 Structural Verification Plan for STS and ISS (JSC-28792, Rev.B). The data files of NASTRAN for these load cases are put under directory:

   /hsm/swang/ams02/nonlin/flange-new/1000, and named as "R1016.dat" on June 5, 2002.
   /hsm/swang/ams02/nonlin/flange-new/1000, and named as "R1032.dat" on June 5, 2002.
   /hsm/swang/ams02/nonlin/flange-new/2000, and named as "R2024.dat" on June 5, 2002.

Load Case	Event	Nx	Ny	Nz	Rx	Ry	Rz
R1016	Liftoff	5.7	1.6	-5.9	-10.0	-25.0	-18.0
R1032	Liftoff	5.7	-1.6	-5.9	-10.0	-25.0	-18.0
R2016	Landing	4.5	2.0	-6.5	-20.0	-35.0	-15.0

5. The results

   The maximum stresses of the elements for each of the Load Cases R1016, 1032 and 2016 are listed below. The NASPOST was used to sort out these information from the f06 and pch data files of the three load cases. A part of the sorted data for the three cases is attached in Appendix B. The f06 data files of NASTRAN for these load cases are put under directory:

   /hsm/swang/ams02/nonlin/flange-new/1000/6-02, and named as "R2053.pch" on June 8, 2002.
   /hsm/swang/ams02/nonlin/flange-new/1000/6-02, and named as "R2020.pch" on June 8, 2002.
   /hsm/swang/ams02/nonlin/flange-new/2000/6-02, and named as "R2016.pch" on June 8, 2002.

   The sorted file of NASPOST from these pch files are put under same directories above.

Load Case	Elem. ID	Elem. Type	MAX-MAX PRIN(KSI)	MAX-VONM STRESS (KSI)	MAX-MAX-SHR STRESS (KSI)
R1016	218235	Quad4-plate	28.080	27.853	14.040
R1016	212434	Quad4-plate	4.281	27.225	15.038
R1032	213623	Quad4-plate	-28.711	27.740	14.355
R2016	218197	Quad4-plate	27.52	27.258	13.379

   The maximum stress on the Conical flanges is located at the intersection of the first ring and a radial rib. The details of the geometric area with this stress level are shown on Pages 12 and 13.

$\sigma t := 28711 \cdot psi$ (max. tensile)

$\sigma y := 27853 \cdot psi$ (max. yield)

$\tau s := 15038 \cdot psi$ (max. shear)

Note: *The Von Mises stress distribution for each of the load cases R1016, R1032 and R2016 is attached from Pages 8 to 10. The worst stresses 43.02KSI and 35.28 KSI on Page 8, 42.78 KSI, 34.98 KSI on Page 9, 42.53 KSI and 34.86 KSI on Page 10 are located at the top tips of the radial ribs,, which are artificially high due to the sharp corner of the tips. Therefore, they will not be used to perform the stress analysis for the Conical Flanges.*

6. The stress analysis

Conical Flanges, 2219-T62 Al. Aly. (AMS-QQ-A-250/30)

$Ftu := 54000 \cdot psi$	ultimate tensile strength	$FSy := 1.1$	yield Factor of Safety
$Fty := 36000 \cdot psi$	tensile yield strength	$FSu := 1.4$	ultimate Factor of Safety
$Fsu := 31000 \cdot psi$	shear strength		
$\eta ult := 0.97$	(ultimate thermal factor at 140 F)		
$\eta yld := 0.97$	(uield thermal factor at 140 F)		

Margins of Safety

Ultimate	$MSu := \frac{\eta ult \cdot Ftu}{\sigma t \cdot FSu} - 1$	MSu = 0.303	#
Yield	$MSy := \frac{\eta yld \cdot Fty}{\sigma y \cdot FSy} - 1$	MSy = 0.14	#
Shear	$MSs := \frac{\eta ult \cdot Fsu}{\tau s \cdot FSu} - 1$	MSs = 0.428	#

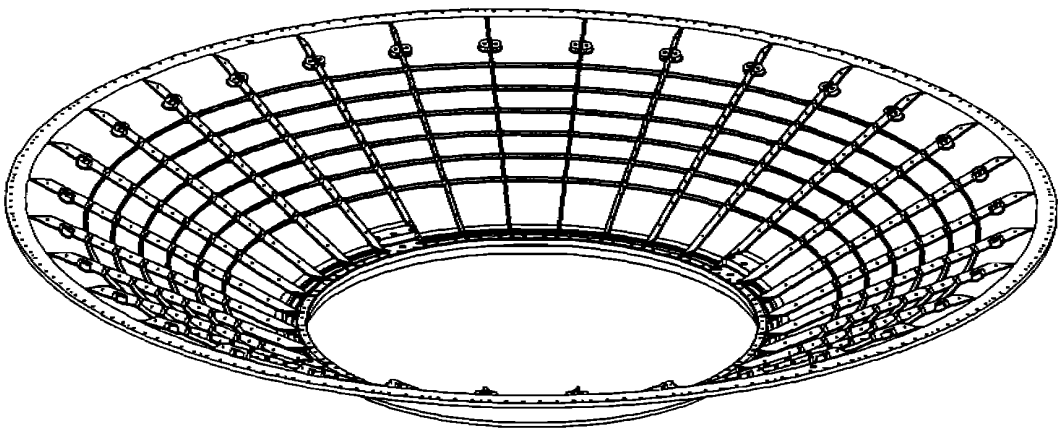

ISO VIEW
REF ONLY

PRELIMINARY
NOT FOR FABRICATION
FOR PLANNING PURPOSES ONLY

INSERTS NOT LISTED AT THIS TIME

1	-001	CONICAL FLANGE	2		3
					2
X	-301	CONICAL FLANGE ASSY			1

NATIONAL AERONAUTICS AND SPACE ADMINISTRATION
LYNDON B. JOHNSON SPACE CENTER HOUSTON, TEXAS

CONICAL FLANGE ASSY,
VACUUM CASE ASSY

ALPHA MAGNETIC SPECTROMETER (AMS)-02

E 21358 SEG39135778

5 CLEAN TO LEVEL GC PER NASA/JSC PRC-5001.

4 BREAK ALL EDGES AND CORNERS .04-.08.

3 ALL DIMENSIONS ARE IN INCHES.

2 ALL FABRICATION WILL CONFORM TO NASA/JSC DWG SK238103755 JSC FABRICATION TOLERANCES AND PRACTICE STANDARDS.

1 INTERPRET DRAWING PER NASA/JSC JPG8500.4, ENGINEERING DRAWING SYSTEM MANUAL.

NOTES: UNLESS OTHERWISE SPECIFIED

3 ANODIZE PER NASA/JSC PRC-5005, TYPE II, CLASS I. MASK ALL HOLES AND INDICATED SURFACES.

2 FINAL MATERIAL PROPERTIES AFTER SPIN FORMING: AL 2219-T62 PER THE DESIGN REQUIREMENT IN MIL-HDBK-5H.

1 ALL PART NUMBERS SHALL BE MARKED BY RUBBER STAMPING USING 73X BLACK INK IN ACCORDANCE WITH NASA/JSC PRC-9002. LOCATE APPROXIMATELY WHERE SHOWN.

FLAG NOTES:

6

1.1-5

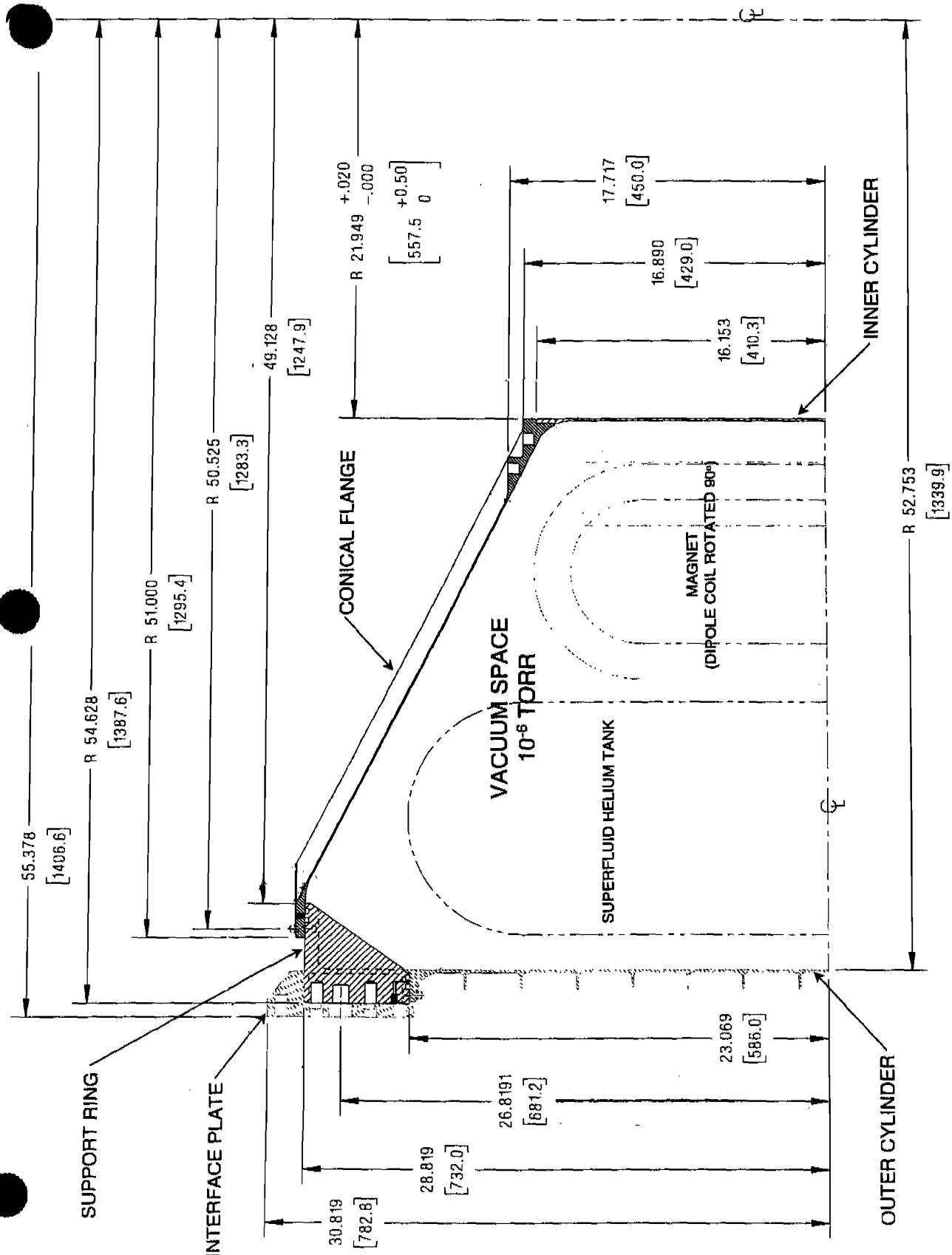
55.378
[1406.6]
R 54.628
[1387.6]
R 51.000
[1295.4]
R 50.525
[1283.3]
49.128
[1247.9]
R 21.949 +.020 -.000
[557.5 +0.50 0]
17.717
[450.0]
16.890
[429.0]
16.153
[410.3]
INNER CYLINDER
CONICAL FLANGE
VACUUM SPACE
10⁻⁶ TORR
MAGNET
(DIPOLE COIL ROTATED 90°)
SUPERFLUID HELIUM TANK
R 52.753
[1339.9]
SUPPORT RING
INTERFACE PLATE
23.069
[586.0]
26.8191
[681.2]
28.819
[732.0]
30.819
[782.8]
OUTER CYLINDER

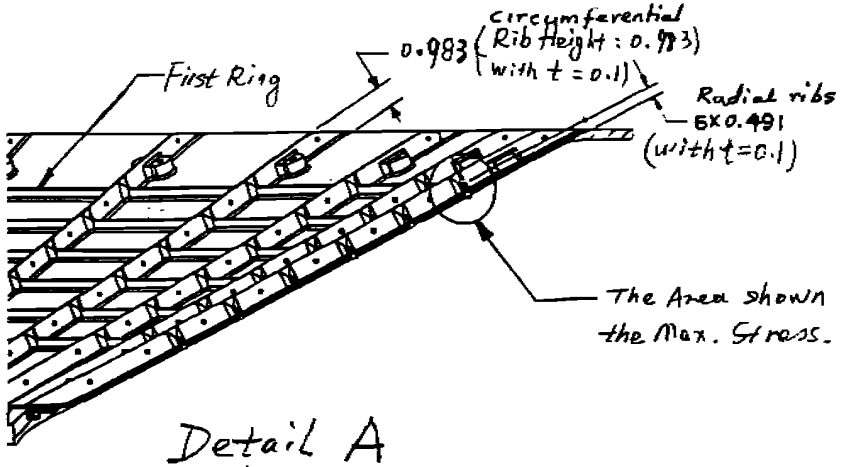

Detail A

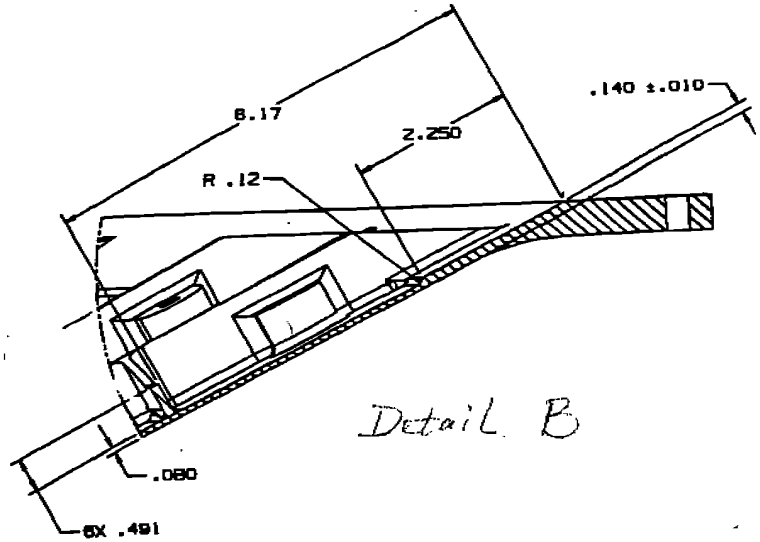

Detail B

CONICAL FLANGES - TOP SHOWN

V31

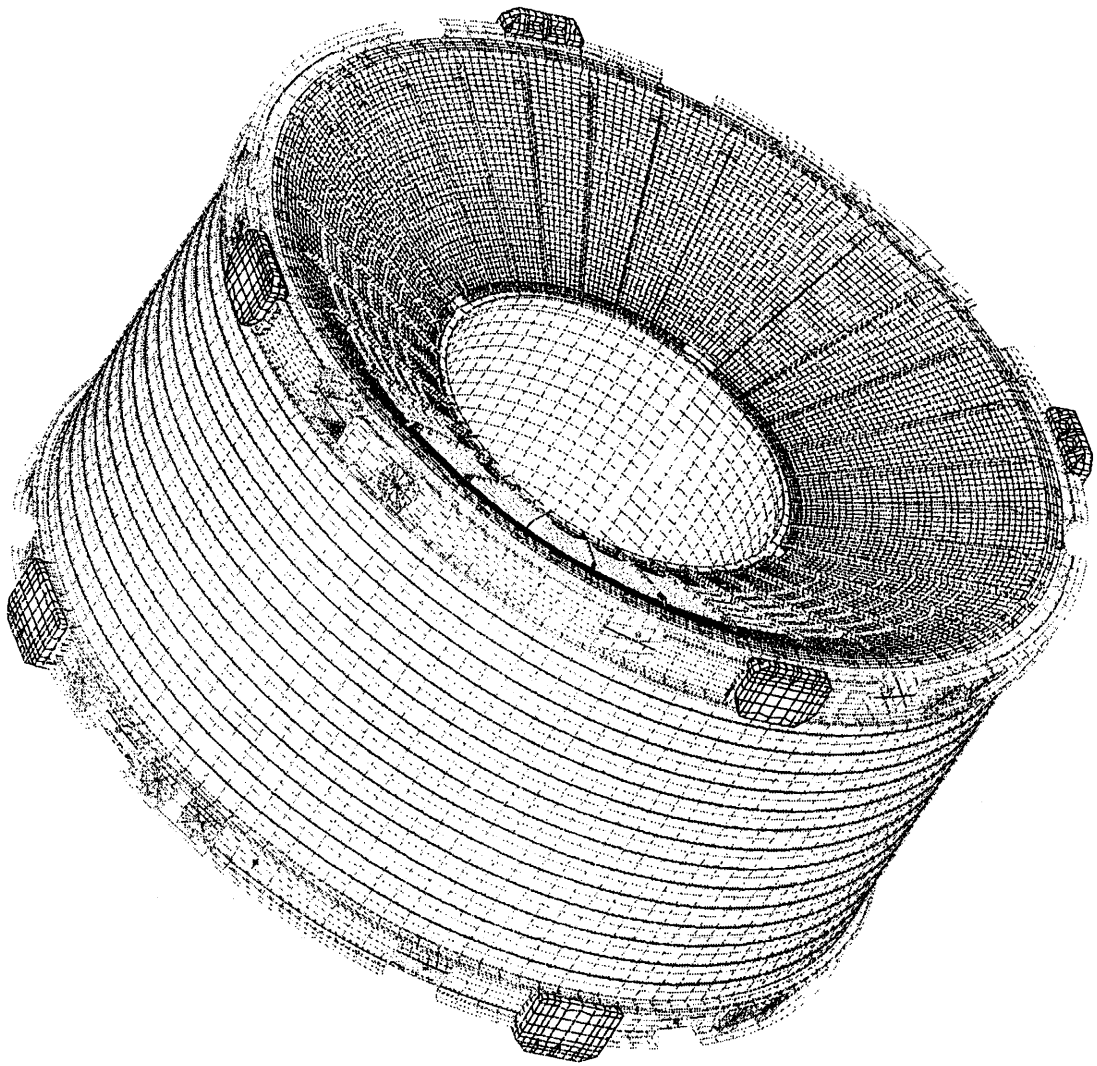

AMS02 - VC

8-101

CONICAL FLANGES - BOTTOM SHOWN

V31

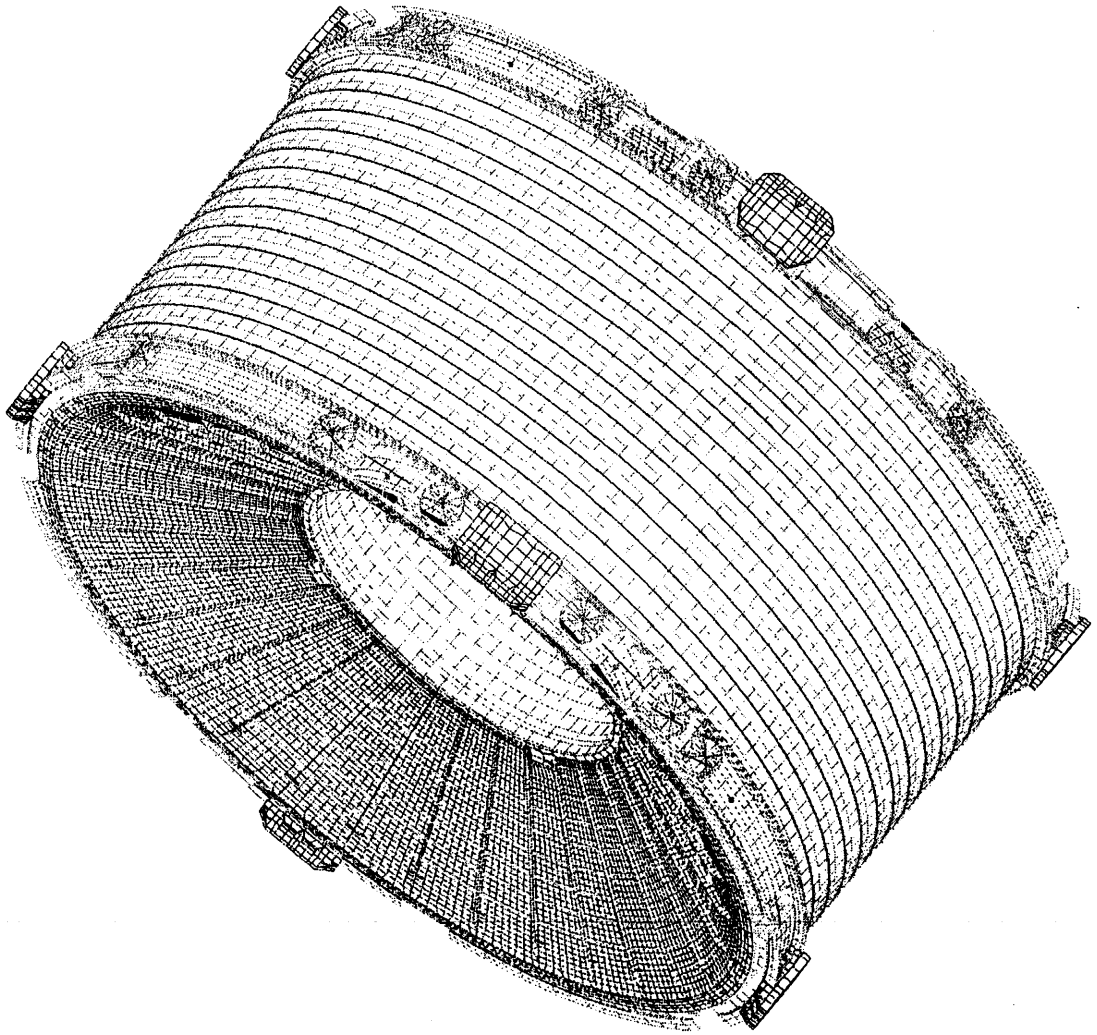

AMS02 - VC

6-1-1-1

CONICAL FLANGES

V31
G77

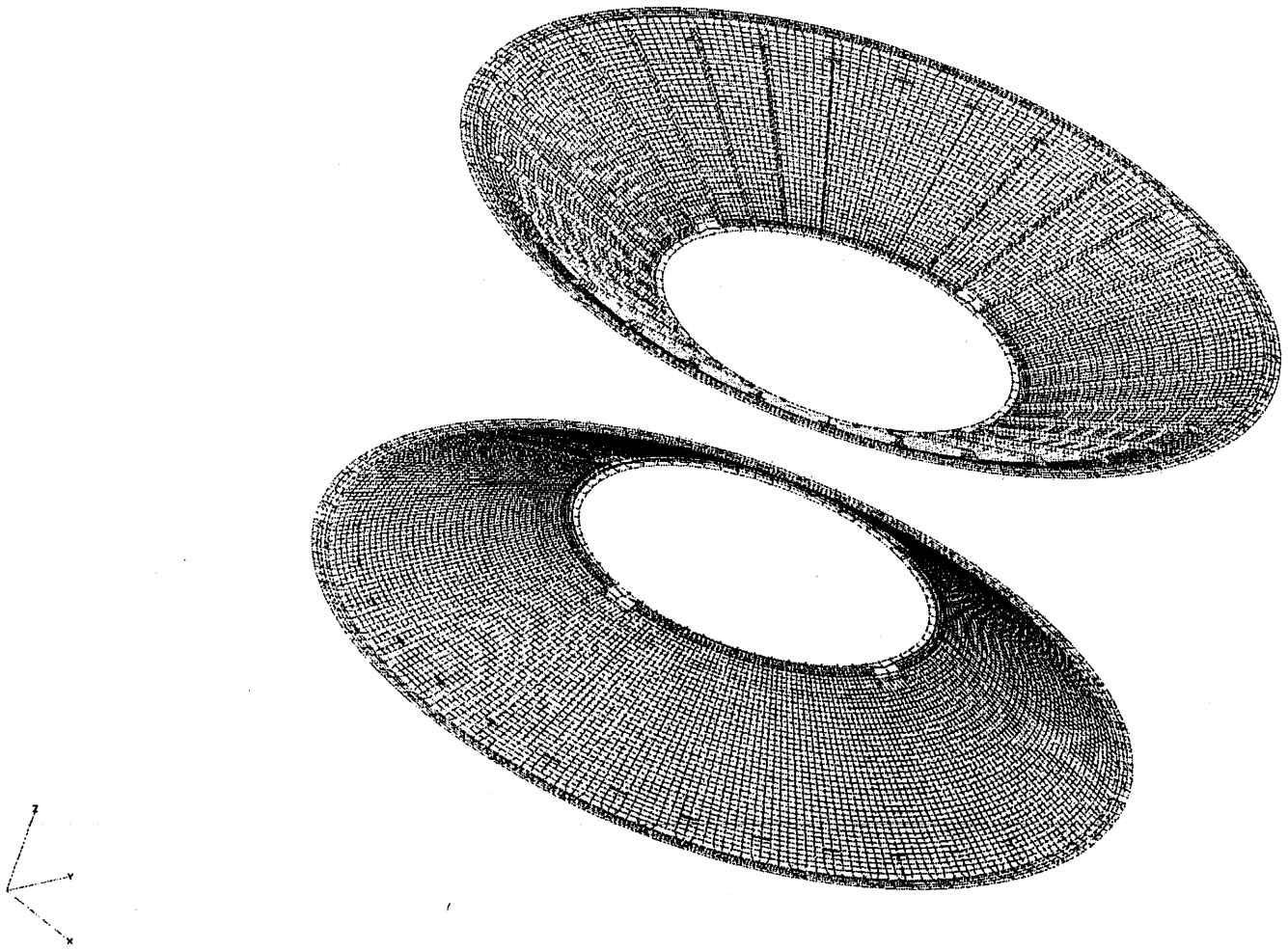

AMS02 - VC

APPENDIX A

The part of the output for checking the flange models

ESULTS OF D BODY CHECKS OF MATRIX KGG FOLLOW

^^^
^^^ ALL 6 DIRECTIONS ARE CHECKED, ONLY THOSE DOFS WHICH FAIL WILL BE PRINTED
^^^
^^^
^^^LARGEST STRAIN ENERGY OF 5.283931E-03 EXCEEDS LIMIT OF 1.000000E-03
^^^
^^^ THE FOLLOWING DIRECTIONS HAVE FAILED THE TEST
^^^
^^^
^^^DIRECTION 6 HAS STRAIN ENERGY = = 5.283931E-03
^^^
^^^
^^^ SOME POSSIBLE REASONS FOR THIS ARE -
^^^
^^^ 1) CELASI ELEMENTS CONNECTING TO ONLY ONE GRID POINT
^^^
^^^ 2) CELASI ELEMENTS CONNECTION TO NON-COINCIDENT POINTS
^^^
^^^ 3) CELASI ELEMENTS CONNECTING TO NON-COLINEAR DOF
^^^
^^^ 4) IMPROPERLY DEFINED DMIG MATRICES
^^^

0
0 MATRIX CHKKGG (GINO NAME 101) IS A DB PREC 6 COLUMN X 6 ROW SQUARE MATRIX.

0COLUMN 1	ROWS 1 THRU 6					
ROW						
1)	-8.4800D-07	5.6607D-08	-2.4359D-08	-5.6598D-06	-7.7791D-06	-5.0772D-06
0COLUMN 2	ROWS 1 THRU 6					
ROW						
1)	-8.7993D-08	-2.1127D-08	6.0552D-08	1.7569D-05	-1.6976D-07	-3.5314D-05
0COLUMN 3	ROWS 1 THRU 6					
ROW						
1)	-9.6800D-09	1.2030D-08	4.6775D-07	-1.0982D-05	-1.7730D-05	7.1068D-06
0COLUMN 4	ROWS 1 THRU 6					
ROW						
1)	-4.0676D-07	1.3530D-05	-1.5092D-05	-4.6816D-04	9.8786D-04	-9.4268D-05
0COLUMN 5	ROWS 1 THRU 6					
ROW						
1)	-1.5214D-05	-4.6048D-06	-8.5047D-07	1.8870D-04	-7.0571D-04	1.1854D-04
0COLUMN 6	ROWS 1 THRU 6					
ROW						
1)	-2.5233D-05	-3.5430D-05	8.8610D-06	-5.5004D-05	-4.4023D-04	-5.2839D-03

0THE NUMBER OF NON-ZERO TERMS IN THE DENSEST COLUMN = 6
0THE DENSITY OF THIS MATRIX IS 100.00 PERCENT.

0

0 MATRIX DIAGKGG (GINO NAME 102) IS A DB PREC 1 COLUMN X 6 ROW RECTANG MATRIX.

0COLUMN 1	ROWS 1 THRU 6					
ROW						
1)	-8.4800D-07	-2.1127D-08	4.6775D-07	-4.6816D-04	-7.0571D-04	-5.2839D-03

0THE NUMBER OF NON-ZERO TERMS IN THE DENSEST COLUMN = 6
0THE DENSITY OF THIS MATRIX IS 100.00 PERCENT.
^^^
^^^STRAIN ENERGY FOR DIRECTION 6 = 5.283931E-03
^^^

A-4-1-2

^^^REACT ●ORCES FOR THIS CHECK FOLLOW -

^^^ THESE TERMS ARE NORMALIZED TO A MAXIMUM VALUE OF
^^^1.0E+0. ONLY TERMS LARGER THAN   1.000000E-01 ARE PRINTED
^^^
^^^ USE PARAM,PRINTOL TO CHANGE THIS VALUE
^^

0
0 REACCOLG

POINT	VALUE	POINT	VALUE	POINT	VALUE	POINT	VALUE	POINT	VALUE
COLUMN 1									
17175 T2	-4.96171E-01	17176 T2	8.63305E-01	17177 T2	4.09241E-01	17182 T2	-3.17054E-01	17183 T2	2.96053E-01
17184 T2	5.90831E-01	17185 T2	6.36328E-01	17187 T2	-3.62521E-01	17188 T2	9.96796E-01	17189 T2	-1.00000E+00
17190 T2	-4.30196E-01	17191 T2	-8.39260E-01	17194 T2	3.40911E-01	17195 T2	-3.39229E-01	17196 T2	3.17825E-01
17198 T2	-5.89204E-01	17199 T2	-6.11756E-01	17200 T2	-3.17484E-01	17201 T2	7.26380E-01	17202 T2	-7.20172E-01
17203 T2	3.58031E-01	17208 T2	4.96502E-01	17244 T2	-9.95831E-01	17245 T2	9.99755E-01	17246 T2	4.97194E-01
17247 T2	-4.08949E-01	17251 T2	-3.17428E-01	17252 T2	-2.94599E-01	17253 T2	3.64536E-01	17254 T2	-7.25300E-01
17255 T2	-3.56369E-01	17256 T2	-5.03267E-01	17257 T2	4.30759E-01	17258 T2	-8.61607E-01	17259 T2	8.40612E-01
17263 T2	-3.41137E-01	17264 T2	3.40616E-01	17265 T2	3.18352E-01	17267 T2	5.90153E-01	17268 T2	-5.90054E-01
17269 T2	6.12776E-01	17270 T2	-6.36173E-01	17272 T2	7.20370E-01	17273 T2	3.18540E-01		

ESULTS OF RIGID BODY CHECKS OF MATRIX KNN FOLLOW

^^^
^^^ ALL 6 DIRECTIONS ARE CHECKED, ONLY THOSE DOFS WHICH FAIL WILL BE PRINTED
^^^
^^^LARGEST STRAIN ENERGY OF 3.524170E-03 EXCEEDS PROVIDED LIMIT OF   1.000000E-03
^^^
^^^
^^^ THE FOLLOWING DIRECTIONS HAVE FAILED THE TEST
^^^
^^^
^^^DIRECTION 5 HAS STRAIN ENERGY = =   2.429124E-03
^^^
^^^
^^^DIRECTION 6 HAS STRAIN ENERGY = =   3.524170E-03
^^^
^^^
^^^ SOME POSSIBLE CAUSES OF THIS ARE -
^^^
^^^ 1) MPC EQUATIONS WHICH DO NOT SATISFY RIGID-BODY MOTION
^^^
^^^ 2) RBE3 ELEMENTS FOR WHICH THE INDEPENDENT DOF CANNOT DESCRIBE ALL POSSIBLE RIGID-BODY MOTIONS
^^^

0
0 MATRIX CHKKNN (GINO NAME 101) IS A DB PREC 6 COLUMN X 6 ROW SQUARE MATRIX.

0COLUMN 1 ROWS 1 THRU 6

ROW					
1)	-8.2943D-07	-1.2442D-07	4.4710D-08	1.6216D-05	-3.5647D-05	4.4811D-05

0COLUMN 2 ROWS 1 THRU 6

ROW					
1)	6.7537D-07	2.3723D-07	6.8612D-09	2.5061D-05	-8.0928D-06	-1.4793D-05

0COLUMN 3 ROWS 1 THRU 6

```
 ROW
      1)  5929D-09 -1.6223D-08  2.1329D-08 -1.0320D-05 -1.962[redacted]  1.1193D-05
0COLUMN       4       ROWS       1 THRU       6      ------------------  --------------------------
 ROW
      1)   -9.7322D-06  3.4268D-05 -2.1670D-06 -8.0765D-05 -2.5649D-03 -7.2146D-04
0COLUMN       5       ROWS       1 THRU       6      ------------------------------------------------
 ROW
      1)   -2.7887D-05 -1.6477D-05 -1.8767D-05  3.1161D-03 -2.4291D-03 -2.4835D-04
0COLUMN       6       ROWS       1 THRU       6      ------------------------------------------------
 ROW
      1)    7.9334D-06 -2.6788D-05  8.5138D-06 -8.3960D-04 -5.5407D-04 -3.5242D-03
0THE NUMBER OF NON-ZERO TERMS IN THE DENSEST COLUMN =       6
0THE DENSITY OF THIS MATRIX IS 100.00 PERCENT.
 ^^^
 ^^^STRAIN ENERGY FOR DIRECTION          5 =    2.429124E-03
^^^


 ^^^NORMALIZED REACTIONS FOR THAT CHECK FOLLOW
 ^^^ONLY TERMS LARGER THAN    1.000000E-01 ARE PRINTED
 ^^^
 ^^^ USE PARAM,PRINTOL TO CHANGE THIS VALUE
1                                                                    MAY   7, 2001  MSC.NASTRAN 12/14/99   PAGE   123

0
0                REACCOLN
     POINT            VALUE      POINT            VALUE      POINT            VALUE      POINT            VALUE      POINT            VALUE


 COLUMN           1
      17175 T3  2.15301E-01      17176 T3 -3.73748E-01      17177 T3 -1.76872E-01      17182 T3  1.37733E-01      17183 T3 -1.27955E-01
      17184 T3 -2.55657E-01      17185 T3 -2.75231E-01      17187 T3  1.57298E-01      17188 T3 -4.68726E-01      17189 T3  5.05435E-01
      17190 T3  1.86428E-01      17191 T3  3.63740E-01      17194 T3 -1.47678E-01      17195 T3  1.47551E-01      17196 T3 -1.37784E-01
      17198 T3  2.55616E-01      17199 T3  2.65438E-01      17200 T3  1.37402E-01      17201 T3 -3.14805E-01      17202 T3  3.37842E-01
      17203 T3 -1.80668E-01      17208 T3 -2.53296E-01      17244 T3  4.68342E-01      17245 T3 -5.05705E-01      17246 T3 -2.15727E-01
      17247 T3  1.77077E-01      17251 T3  1.37746E-01      17252 T3  1.27784E-01      17253 T3 -1.57324E-01      17254 T3  3.14641E-01
      17255 T3  1.80535E-01      17256 T3  2.52441E-01      17257 T3 -1.86828E-01      17258 T3  3.73965E-01      17259 T3 -3.63899E-01
      17263 T3  1.47465E-01      17264 T3 -1.47639E-01      17265 T3 -1.37762E-01      17267 T3 -2.55963E-01      17268 T3  2.55617E-01
      17269 T3 -2.65554E-01      17270 T3  2.74943E-01      17272 T3 -3.38006E-01      17273 T3 -1.37112E-01      52001 R2 -1.00000E+00
 ^^^
 ^^^STRAIN ENERGY FOR DIRECTION          6 =    3.524170E-03
 ^^^
 ^^^NORMALIZED REACTIONS FOR THAT CHECK FOLLOW
 ^^^ONLY TERMS LARGER THAN    1.000000E-01 ARE PRINTED
 ^^^
 ^^^ USE PARAM,PRINTOL TO CHANGE THIS VALUE
1                                                                    MAY   7, 2001  MSC.NASTRAN 12/14/99   PAGE   124

0
0                REACCOLN
     POINT            VALUE      POINT            VALUE      POINT            VALUE      POINT            VALUE      POINT            VALUE


 COLUMN           1
      52001 R3  1.00000E+00


 ^^^RESULTS OF CHECK OF MGG

1                                                                    MAY   7, 2001  MSC.NASTRAN 12/14/99   PAGE   125

0
0      MATRIX WGHTG    (GINO NAME 101 ) IS A DB  PREC           6 COLUMN X           6 ROW SQUARE   MATRIX.
0COLUMN       1       ROWS       1 THRU       6      ------------------------------------------------
 ROW
```

A-1-1-4

```
      1)   [illegible]5779D+01 -1.3878D-16  1.7347D-17 -3.2752D-15 -1.361[illegible] -1.2490D+00
0COLUMN                ROWS       1 THRU       6     ----------------[illegible]----------------------------
 ROW
      1)   -1.5266D-16  3.6793D+01 -4.9440D-17  1.2773D+00  1.1657D-15  7.5039D-03
0COLUMN       3        ROWS       1 THRU       6     ----------------------------------------------------
 ROW
      1)    3.7730D-17 -4.3585D-17  3.6779D+01  1.2492D+00 -5.1881D-03 -2.3939D-15
0COLUMN       4        ROWS       1 THRU       6     ----------------------------------------------------
 ROW
      1)   -1.4433D-15  1.2773D+00  1.2492D+00  9.2239D+04  2.8083D+02 -2.2128D+02
0COLUMN       5        ROWS       1 THRU       6     ----------------------------------------------------
 ROW
      1)   -1.3616D+00  2.1094D-15 -5.1881D-03  2.8083D+02  6.5135D+04 -8.1450D+02
0COLUMN       6        ROWS       1 THRU       6     ----------------------------------------------------
 ROW
      1)   -1.2490D+00  7.5039D-03 -4.0939D-16 -2.2128D+02 -8.1450D+02  8.3214D+04
0THE NUMBER OF NON-ZERO TERMS IN THE DENSEST COLUMN =        6
0THE DENSITY OF THIS MATRIX IS 100.00 PERCENT.
0
                    MASSWT     CSP      1.000000E+00  0.000000E+00
0
                    GRDPNT     INT        999999
1                                                                                  MAY   7, 2001  MSC.NASTRAN 12/14/99   PAGE   126
0


 ^^^RESULTS OF CHECK OF MNN
1                                                                                  MAY   7, 2001  MSC.NASTRAN 12/14/99   PAGE   127
0
0      MATRIX WGHTN    (GINO NAME 101 ) IS A DB  PREC          6 COLUMN X          6 ROW SQUARE   MATRIX.
0COLUMN       1        ROWS       1 THRU       6     ----------------------------------------------------
 ROW
      1)    3.6779D+01 -6.5531D-17  3.0267D-18  3.9987D-15 -1.3616D+00 -1.2490D+00
0COLUMN       2        ROWS       1 THRU       6     ----------------------------------------------------
 ROW
      1)   -7.9819D-17  3.6793D+01 -1.6315D-17  1.2773D+00  1.1315D-14  7.5039D-03
0COLUMN       3        ROWS       1 THRU       6     ----------------------------------------------------
 ROW
      1)   -4.1794D-19 -3.5783D-17  3.6779D+01  1.2492D+00 -5.1881D-03  5.2917D-16
0COLUMN       4        ROWS       1 THRU       6     ----------------------------------------------------
 ROW
      1)    3.6233D-15  1.2773D+00  1.2492D+00  9.2239D+04  2.8083D+02 -2.2128D+02
0COLUMN       5        ROWS       1 THRU       6     ----------------------------------------------------
 ROW
      1)   -1.3616D+00 -3.4833D-14 -5.1881D-03  2.8083D+02  6.5135D+04 -8.1450D+02
0COLUMN       6        ROWS       1 THRU       6     ----------------------------------------------------
 ROW
      1)   -1.2490D+00  7.5039D-03 -5.4994D-16 -2.2128D+02 -8.1450D+02  8.3214D+04
0THE NUMBER OF NON-ZERO TERMS IN THE DENSEST COLUMN =        6
0THE DENSITY OF THIS MATRIX IS 100.00 PERCENT.
0
                    MASSWT     CSP      1.000000E+00  0.000000E+00
0
                    GRDPNT     INT        999999
1                                                                                  MAY   7, 2001  MSC.NASTRAN 12/14/99   PAGE   128

0
 ^^^
 ^^^ RESULTS OF RIGID BODY CHECKS OF MATRIX KAA FOLLOW
 ^^^
 ^^^ ALL 6 DIRECTIONS ARE CHECKED, ONLY THOSE DOFS WHICH FAIL WILL BE PRINTED
 ^^^
 ^^^LARGEST STRAIN ENERGY OF  3.524170E-03 EXCEEDS PROVIDED LIMIT OF    1.000000E-03
```

A - 1.1 - 6

```
^^^
^^^ IF T.      OR N- CHECKS HAVE FAILED, THEY   SHOULD BE RESOLVE      RE LOOKING AT THE A- SET CHECKS
^^^
^^^ THE FOLLOWING DIRECTIONS HAVE FAILED THE TEST
^^^
^^^
^^^DIRECTION            5 HAS STRAIN ENERGY = =    2.429124E-03
^^^
^^^
^^^DIRECTION            6 HAS STRAIN ENERGY = =    3.524170E-03
^^^
^^^ IF THE MODEL HAS PASSED THE PREVIOUS G AND N CHECKS POSSIBLE REASONS FOR FAILING THIS TEST ARE -
^^^
^^^ 1) THE STRUCTURE IS NOT INTENDED TO BE FREE-FREE
^^^     - IF THIS IS THE CASE (A CONSTRAINED STRUCTURE) FAILING THIS CHECK IS A SIGN THAT THE STRUCTURE
^^^       IS PROPERLY CONSTRAINED TO GROUND
^^^
^^^ 2) PARAM,GRDPNT IS LOCATED FAR FROM THE CG OF THE   MODEL. MSC RECOMMENDS THAT GRDPNT SHOULD BE LOCATED
^^^ AS CLOSE AS POSSIBLE TO THE GEOMETRIC CENTER OF THE MODEL (SEE GPWG OUTPUT)
^^^
^^^ 3) AUTOSPC CONSTRAINS NEAR-SINGULAR DOF.
^^^    WHEN A FINITE ELEMENT MODEL WITH AUTOSPC FAILS
^^^    THE KAA TEST, IT IS NOT EVIDENCE THAT GROUNDING
^^^    HAS OCCURRED.  THE USE OF PARAM,SNORM WILL NOT
^^^    ELIMINATE THE SPURIOUS FAILURE
^^^
1                                                                                  MAY   7, 2001  MSC.NASTRAN 12/14/99   PAGE   129
0
0      MATRIX CHKKAA   (GINO NAME 101 ) IS A DB  PREC           6 COLUMN X           6 ROW SQUARE   MATRIX.
0COLUMN      1       ROWS       1 THRU      6     ------------------------------------------------
 ROW
     1)   -8.2943D-07 -1.2442D-07  4.4710D-08  1.6216D-05 -3.5647D-05  4.4811D-05
0COLUMN      2       ROWS       1 THRU      6     ------------------------------------------------
 ROW
     1)    6.7537D-07  2.3723D-07  6.8612D-09  2.5061D-05 -8.0928D-06 -1.4793D-05
0COLUMN      3       ROWS       1 THRU      6     ------------------------------------------------
 ROW
     1)   -3.5929D-09 -1.6223D-08  2.1329D-08 -1.0320D-05 -1.9622D-05  1.1193D-05
0COLUMN      4       ROWS       1 THRU      6     ------------------------------------------------
 ROW
     1)   -9.7322D-06  3.4268D-05 -2.1670D-06 -8.0765D-05 -2.5649D-03 -7.2146D-04
0COLUMN      5       ROWS       1 THRU      6     ------------------------------------------------
 ROW
     1)   -2.7887D-05 -1.6477D-05 -1.8767D-05  3.1161D-03 -2.4291D-03 -2.4835D-04
0COLUMN      6       ROWS       1 THRU      6     ------------------------------------------------
 ROW
     1)    7.9334D-06 -2.6788D-05  8.5138D-06 -8.3960D-04 -5.5407D-04 -3.5242D-03
0THE NUMBER OF NON-ZERO TERMS IN THE DENSEST COLUMN =       6
0THE DENSITY OF THIS MATRIX IS 100.00 PERCENT.
^^^
^^^STRAIN ENERGY FOR DIRECTION          5 =    2.429124E-03


^^^NORMALIZED REACTIONS FOR THAT CHECK FOLLOW
^^^ONLY TERMS LARGER THAN    1.000000E-01 ARE PRINTED
^^^
^^^ USE PARAM,PRINTOL TO CHANGE THIS VALUE
1                                                                                  MAY   7, 2001  MSC.NASTRAN 12/14/99   PAGE   130
0
0                REACCOLA
    POINT           VALUE      POINT           VALUE      POINT           VALUE      POINT           VALUE      POINT           VALUE
```

A-1-1-7

```
COLUMN          1
     17173 T3  2.15301E-01     17176 T3 -3.73748E-01     17177 T3 -1.76872E-01     17182 T3  1.37733E-01     17183 T3 -1.27955E-01
     17184 T3 -2.55657E-01     17185 T3 -2.75231E-01     17187 T3  1.57298E-01     17188 T3 -4.68726E-01     17189 T3  5.05435E-01
     17190 T3  1.86428E-01     17191 T3  3.63740E-01     17194 T3 -1.47678E-01     17195 T3  1.47551E-01     17196 T3 -1.37784E-01
     17198 T3  2.55616E-01     17199 T3  2.65438E-01     17200 T3  1.37402E-01     17201 T3 -3.14805E-01     17202 T3  3.37842E-01
     17203 T3 -1.80668E-01     17208 T3 -2.53296E-01     17244 T3  4.68342E-01     17245 T3 -5.05705E-01     17246 T3 -2.15727E-01
     17247 T3  1.77077E-01     17251 T3  1.37746E-01     17252 T3  1.27784E-01     17253 T3 -1.57324E-01     17254 T3  3.14641E-01
     17255 T3  1.80535E-01     17256 T3  2.52441E-01     17257 T3 -1.86828E-01     17258 T3  3.73965E-01     17259 T3 -3.63899E-01
     17263 T3  1.47465E-01     17264 T3 -1.47639E-01     17265 T3 -1.37762E-01     17267 T3 -2.55963E-01     17268 T3  2.55617E-01
     17269 T3 -2.65554E-01     17270 T3  2.74943E-01     17272 T3 -3.38006E-01     17273 T3 -1.37112E-01     52001 R2 -1.00000E+00
^^^
^^^STRAIN ENERGY FOR DIRECTION          6 =    3.524170E-03
^^^NORMALIZED REACTIONS FOR THAT CHECK FOLLOW
^^^ONLY TERMS LARGER THAN    1.000000E-01 ARE PRINTED
^^^
^^^ USE PARAM,PRINTOL TO CHANGE THIS VALUE
1
                                                                                  MAY   7, 2001  MSC.NASTRAN 12/14/99   PAGE   131
0
0                REACCOLA
     POINT            VALUE      POINT            VALUE      POINT            VALUE      POINT            VALUE      POINT            VALUE

COLUMN          1
     52001 R3  1.00000E+00
^^^PASS=            1 CHECKDR=           -1QUITDR=          -1
^^^RESULTS OF CHECK OF MAA
1
                                                                                  MAY   7, 2001  MSC.NASTRAN 12/14/99   PAGE   132
0
0      MATRIX WGHTA    (GINO NAME 101 ) IS A DB  PREC          6 COLUMN X          6 ROW SQUARE   MATRIX.
0COLUMN      1       ROWS      1 THRU      6     ------------------------------------------------
 ROW
     1)    3.6779D+01  2.0817D-16  3.4694D-17  1.6431D-14 -1.3616D+00 -1.2490D+00
0COLUMN      2       ROWS      1 THRU      6     ------------------------------------------------
 ROW
     1)    3.6082D-16  3.6793D+01  8.3267D-17  1.2773D+00 -2.9005D-15  7.5039D-03
0COLUMN      3       ROWS      1 THRU      6     ------------------------------------------------
 ROW
     1)    2.9057D-17 -1.8041D-16  3.6779D+01  1.2492D+00 -5.1881D-03  8.8818D-16
0COLUMN      4       ROWS      1 THRU      6     ------------------------------------------------
 ROW
     1)   -3.9968D-15  1.2773D+00  1.2492D+00  9.2239D+04  2.8083D+02 -2.2128D+02
0COLUMN      5       ROWS      1 THRU      6     ------------------------------------------------
 ROW
     1)   -1.3616D+00 -4.3299D-14 -5.1881D-03  2.8083D+02  6.5135D+04 -8.1450D+02
0COLUMN      6       ROWS      1 THRU      6     ------------------------------------------------
 ROW
     1)   -1.2490D+00  7.5039D-03 -1.2212D-15 -2.2128D+02 -8.1450D+02  8.3214D+04
0THE NUMBER OF NON-ZERO TERMS IN THE DENSEST COLUMN =       6
0THE DENSITY OF THIS MATRIX IS 100.00 PERCENT.
0
                    MASSWT     CSP      1.000000E+00  0.000000E+00
0
                    GRDPNT     INT        999999

*** SYSTEM INFORMATION MESSAGE 6916 (DFMSYN)
     DECOMP ORDERING METHOD CHOSEN: BEND, ORDERING METHOD USED: BEND
  INSUFFICIENT CORE FOR FBSMEM IN REIGL
  INCREASE MEMORY BY AT LEAST      1157283 WORDS
1                                                                                 MAY   7, 2001  MSC.NASTRAN 12/14/99   PAGE   133

0
 *** USER INFORMATION MESSAGE 5010 (LNCILD)
```

A-1-1-8

STUR[redacted]UENCE DATA FOR EIGENVALUE EXTRACTION.
TRIA[redacted]ENVALUE = 2.031666D+01, CYCLES = 7.173751D-01 NUM[redacted] EIGENVALUES BELOW THIS VALUE = 6
*** USER INFORMATION MESSAGE 5010 (LNCILD)
STURM SEQUENCE DATA FOR EIGENVALUE EXTRACTION.
TRIAL EIGENVALUE = 3.879597D+04, CYCLES = 3.134826D+01 NUMBER OF EIGENVALUES BELOW THIS VALUE = 20

TABLE OF SHIFTS: (LNNRIGL)

SHIFT #	SHIFT VALUE	FREQUENCY, CYCLES	# EIGENVALUES BELOW	# NEW EIGENVALUES FOUND
1.	2.0316662E+01	7.1737510E-01	6	22
2.	3.8795965E+04	3.1348257E+01	20	0

0
0

E I G E N V A L U E A N A L Y S I S S U M M A R Y (READ MODULE)

BLOCK SIZE USED 7

NUMBER OF DECOMPOSITIONS 2

NUMBER OF ROOTS FOUND 20

NUMBER OF SOLVES REQUIRED 11

0

R E A L E I G E N V A L U E S

MODE NO.	EXTRACTION ORDER	EIGENVALUE	RADIANS	CYCLES	GENERALIZED MASS	GENERALIZED STIFFNESS
1	1	7.346718E-08	2.710483E-04	4.313868E-05	1.000000E+00	7.346718E-08
2	2	1.741550E-07	4.173189E-04	6.641836E-05	1.000000E+00	1.741550E-07
3	3	2.010880E-07	4.484284E-04	7.136959E-05	1.000000E+00	2.010880E-07
4	4	2.410430E-07	4.909613E-04	7.813892E-05	1.000000E+00	2.410430E-07
5	5	3.412148E-07	5.841359E-04	9.296812E-05	1.000000E+00	3.412148E-07
6	6	3.685538E-07	6.070863E-04	9.662079E-05	1.000000E+00	3.685538E-07
7	7	7.302433E+02	2.702301E+01	4.300846E+00	1.000000E+00	7.302433E+02
8	8	1.001325E+03	3.164371E+01	5.036253E+00	1.000000E+00	1.001325E+03
9	9	1.021691E+03	3.196390E+01	5.087213E+00	1.000000E+00	1.021691E+03
10	10	1.089291E+03	3.300440E+01	5.252814E+00	1.000000E+00	1.089291E+03
11	11	1.433703E+03	3.786428E+01	6.026287E+00	1.000000E+00	1.433703E+03
12	12	2.218011E+03	4.709577E+01	7.495524E+00	1.000000E+00	2.218011E+03
13	13	7.317770E+03	8.554397E+01	1.361475E+01	1.000000E+00	7.317770E+03
14	14	1.647421E+04	1.283519E+02	2.042784E+01	1.000000E+00	1.647421E+04
15	15	1.970419E+04	1.403716E+02	2.234084E+01	1.000000E+00	1.970419E+04
16	16	2.215076E+04	1.488313E+02	2.368724E+01	1.000000E+00	2.215076E+04
17	17	3.075416E+04	1.753687E+02	2.791079E+01	1.000000E+00	3.075416E+04
18	18	3.532885E+04	1.879597E+02	2.991471E+01	1.000000E+00	3.532885E+04
19	19	3.830115E+04	1.957068E+02	3.114770E+01	1.000000E+00	3.830115E+04
20	20	3.835326E+04	1.958399E+02	3.116889E+01	1.000000E+00	3.835326E+04

0
1

* * * * D B D I C T P R I N T * * * * SUBDMAP = PRTSUM , DMAP STATEMENT NO. 25

```
0
0 SEID  P[illegible]ROJ VERS APRCH        * * * *  A N A L Y S I S  S U[illegible]A R Y  T A B L E  * * * *
 ------------------------------------------------------------------------------------------------------------------------------
     0     0    1    1 '          '    T    T    T    F    F    T    F    T    0    F    -1          0          F
0SEID = SUPERELEMENT ID.
 PEID = PRIMARY SUPERELEMENT ID OF IMAGE SUPERELEMENT.
 PROJ = PROJECT ID NUMBER.
 VERS = VERSION ID.
 APRCH = BLANK FOR STRUCTURAL ANALYSIS.  HEAT FOR HEAT TRANSFER ANALYSIS.
 SEMG = STIFFNESS AND MASS MATRIX GENERATION STEP.
 SEMR = MASS MATRIX REDUCTION STEP (INCLUDES EIGENVALUE SOLUTION FOR MODES).
 SEKR = STIFFNESS MATRIX REDUCTION STEP.
 SELG = LOAD MATRIX GENERATION STEP.
 SELR = LOAD MATRIX REDUCTION STEP.
 MODES = T (TRUE) IF NORMAL MODES OR BUCKLING MODES CALCULATED.
 DYNRED = T (TRUE) MEANS GENERALIZED DYNAMIC AND/OR COMPONENT MODE REDUCTION PERFORMED.
 SOLLIN = T (TRUE) IF LINEAR SOLUTION EXISTS IN DATABASE.
 PVALID = P-DISTRIBUTION ID OF P-VALUE FOR P-ELEMENTS
 LOOPID = THE LAST LOOPID VALUE USED IN THE NONLINEAR ANALYSIS.  USEFUL FOR RESTARTS.
 SOLNL = T (TRUE) IF NONLINEAR SOLUTION EXISTS IN DATABASE.
 DESIGN CYCLE = THE LAST DESIGN CYCLE (ONLY VALID IN OPTIMIZATION).
 SENSITIVITY = SENSITIVITY MATRIX GENERATION FLAG.
1
                                        * * * END OF JOB * * *
```

APPENDIX B

The Data of the Stresses for Subcases R1016, R1032 and R2016

B-1.1.1-1

$ punch files of load cases-1000 for sorting out
FILES '/hsm/swang/ams02/nonlin/flange-new/1000/6-02/R1016.pch'
SELECT QUAD4-STRESSES
SORT VAR = MAXABS(MAX-PRIN-TOP);OPT=12
PRINT 7 9 10 11 13 14;
HEADING = 'MAX TOP PRIN STRESSES BASED ALL CASES';
NCASES =15

ID	SUBCASE	MAX-PRIN-TOP	VON-MISES-TOP	MAX-SHEAR-TOP	MAX-PRIN-BOT	VON-MISES-BOT	MAX-SHEAR-BOT
218235	1016	2.808028E+04	2.785276E+04	1.404014E+04	2.732786E+04	2.677373E+04	1.366393E+04
218197	1016	2.790021E+04	2.766761E+04	1.395011E+04	2.706154E+04	2.652661E+04	1.353077E+04
217387	1016	2.748222E+04	2.720316E+04	1.374111E+04	2.617061E+04	2.567829E+04	1.308531E+04
218233	1016	2.741941E+04	2.767168E+04	1.395862E+04	2.696044E+04	2.682093E+04	1.348022E+04
217429	1016	2.725715E+04	2.705957E+04	1.362857E+04	2.669504E+04	2.615706E+04	1.3[illegible]
218199	1016	2.714270E+04	2.740313E+04	1.382817E+04	2.679734E+04	2.664419E+04	1.33[illegible]
217445	1016	2.712519E+04	2.686846E+04	1.356260E+04	2.605158E+04	2.552435E+04	1.302[illegible]
202516	1016	2.697744E+04	2.579956E+04	1.348872E+04	-1.818989E-12	1.683531E+04	9.5487[illegible]
217385	1016	2.677691E+04	2.703834E+04	1.364620E+04	2.623528E+04	2.607760E+04	1.3117[illegible]
218231	1016	2.662334E+04	2.687387E+04	1.355879E+04	2.634449E+04	2.617935E+04	1.31722[illegible]E+04
217371	1016	2.648185E+04	2.628593E+04	1.324093E+04	2.595090E+04	2.542193E+04	1.297545E+04
218201	1016	2.646815E+04	2.671335E+04	1.347598E+04	2.618129E+04	2.602046E+04	1.309065E+04
217431	1016	2.645259E+04	2.669525E+04	1.346573E+04	2.613601E+04	2.599915E+04	1.306801E+04
217447	1016	2.643547E+04	2.668359E+04	1.346248E+04	2.583277E+04	2.569388E+04	1.291638E+04
217383	1016	2.625195E+04	2.649936E+04	1.337001E+04	2.575086E+04	2.558964E+04	1.287543E+04

$
$
SELECT QUAD4-STRESSES
SORT VAR = MAXABS(MAX-PRIN-BOT);OPT=12
PRINT 7 9 10 11 13 14;
HEADING = 'MAX BOT PRIN STRESSES BASED ALL CASES';
NCASES =15

ID	SUBCASE	MAX-PRIN-TOP	VON-MISES-TOP	MAX-SHEAR-TOP	MAX-PRIN-BOT	VON-MISES-BOT	MAX-SHEAR-BOT
218235	1016	2.808028E+04	2.785276E+04	1.404014E+04	2.732786E+04	2.677373E+04	1.366393E+04
218197	1016	2.790021E+04	2.766761E+04	1.395011E+04	2.706154E+04	2.652661E+04	1.353077E+04
218233	1016	2.741941E+04	2.767168E+04	1.395862E+04	2.696044E+04	2.682093E+04	1.348022E+04
218199	1016	2.714270E+04	2.740313E+04	1.382817E+04	2.679734E+04	2.664419E+04	1.339867E+04
217429	1016	2.725715E+04	2.705957E+04	1.362857E+04	2.669504E+04	2.615706E+04	1.334752E+04
218231	1016	2.662334E+04	2.687387E+04	1.355879E+04	2.634449E+04	2.617935E+04	1.317224E+04
217385	1016	2.677691E+04	2.703834E+04	1.364620E+04	2.623528E+04	2.607760E+04	1.311764E+04
218201	1016	2.646815E+04	2.671335E+04	1.347598E+04	2.618129E+04	2.602046E+04	1.309065E+04
217387	1016	2.748222E+04	2.720316E+04	1.374111E+04	2.617061E+04	2.567829E+04	1.308531E+04
217431	1016	2.645259E+04	2.669525E+04	1.346573E+04	2.613601E+04	2.599915E+04	1.306801E+04

217445 1016 2.712519E+04 2.686846E+04 1.356260E+04 2.605158E+04 2.552435E+04 1.302579E+04

217371 1016 2.648185E+04 2.628593E+04 1.324093E+04 2.595090E+04 2.542193E+04 1.297545E+04

217447 1016 2.643547E+04 2.668359E+04 1.346248E+04 2.583277E+04 2.569388E+04 1.291638E+04

217383 1016 2.625195E+04 2.649936E+04 1.337001E+04 2.575086E+04 2.558964E+04 1.287543E+04

217433 1016 2.564476E+04 2.589348E+04 1.306762E+04 2.551207E+04 2.535394E+04 1.275604E+04

```
### $
### $
### SELECT QUAD4-STRESSES
### SORT VAR = MAXABS(VON-MISES-TOP);OPT=12
### PRINT 7 9 10 11 13 14;
### HEADING = 'MAX TOP YEILD STRESSES BASED ALL CASES';
### NCASES =15
```

ID SUBCASE MAX-PRIN-TOP VON-MISES-TOP MAX-SHEAR-TOP MAX-PRIN-BOT VON-MISES-BOT MAX-SHEAR-BOT

218235 1016 2.808028E+04 2.785276E+04 1.404014E+04 2.732786E+04 2.677373E+04 1.366393E+04

213536 1016 -1.091394E-11 2.767600E+04 1.434296E+04 -5.456968E-12 2.687451E+04 1.388281E+04

218233 1016 2.741941E+04 2.767168E+04 1.395862E+04 2.696044E+04 2.682093E+04 1.348022E+04

218197 1016 2.790021E+04 2.766761E+04 1.395011E+04 2.706154E+04 2.652661E+04 1.353077E+04

213623 1016 -3.637979E-12 2.748134E+04 1.420950E+04 0.000000E+00 2.766113E+04 1.431163E+04

213625 1016 -7.275958E-12 2.740965E+04 1.417285E+04 3.637979E-12 2.735323E+04 1.414066E+04

218199 1016 2.714270E+04 2.740313E+04 1.382817E+04 2.679734E+04 2.664419E+04 1.339867E+04

213621 1016 4.126848E+02 2.737201E+04 1.378801E+04 4.479221E+02 2.729752E+04 1.375936E+04

217387 1016 2.748222E+04 2.720316E+04 1.374111E+04 2.617061E+04 2.567829E+04 1.308531E+04

213627 1016 3.993749E+02 2.710134E+04 1.364941E+04 3.902262E+02 2.709783E+04 1.364542E+04

217429 1016 2.725715E+04 2.705957E+04 1.362857E+04 2.669504E+04 2.615706E+04 1.334752E+04

213538 1016 -1.637090E-11 2.704159E+04 1.397211E+04 -1.273293E-11 2.742826E+04 1.419931E+04

212385 1016 2.080089E+03 2.703967E+04 1.400982E+04 0.000000E+00 1.395237E+04 7.163542E+03

217385 1016 2.677691E+04 2.703834E+04 1.364620E+04 2.623528E+04 2.607760E+04 1.311764E+04

213540 1016 3.960877E+02 2.703616E+04 1.361602E+04 4.007606E+02 2.708968E+04 1.364392E+04

```
### $
### $
### SELECT QUAD4-STRESSES
### SORT VAR = MAXABS(VON-MISES-BOT);OPT=12
### PRINT 7 9 10 11 13 14;
### HEADING = 'MAX BOT YEILD STRESSES BASED ALL CASES';
### NCASES =15
```

ID SUBCASE MAX-PRIN-TOP VON-MISES-TOP MAX-SHEAR-TOP MAX-PRIN-BOT VON-MISES-BOT MAX-SHEAR-BOT

213956 1016 0.000000E+00 2.475988E+04 1.295045E+04 9.094947E-12 2.834287E+04 1.487459E+04

213623 1016 -3.637979E-12 2.748134E+04 1.420950E+04 0.000000E+00 2.766113E+04 1.431163E+04

213538 1016 -1.637090E-11 2.704159E+04 1.397211E+04 -1.273293E-11 2.742826E+04 1.419931E+04

213625 1016 -7.275958E-12 2.740965E+04 1.417285E+04 3.637979E-12 2.735323E+04 1.414066E+04

213621 1016 4.126848E+02 2.737201E+04 1.378801E+04 4.479221E+02 2.729752E+04 1.375936E+04

212434 1016 4.281181E+03 1.051642E+04 5.990880E+03 7.046368E+03 2.722458E+04 1.502752E+04

213627 1016 3.993749E+02 2.710134E+04 1.364941E+04 3.902262E+02 2.709783E+04 1.364542E+04

213540 1016 3.960877E+02 2.703616E+04 1.361602E+04 4.007606E+02 2.708968E+04 1.364392E+04

213536 1016 -1.091394E-11 2.767600E+04 1.434296E+04 -5.456968E-12 2.687451E+04 1.388281E+04

213534 1016 4.463118E+02 2.687626E+04 1.354832E+04 4.429713E+02 2.682457E+04 1.352186E+04

218233 1016 2.741941E+04 2.767168E+04 1.395862E+04 2.696044E+04 2.682093E+04 1.348022E+04

218235 1016 2.808028E+04 2.785276E+04 1.404014E+04 2.732786E+04 2.677373E+04 1.366393E+04

218199 1016 2.714270E+04 2.740313E+04 1.382817E+04 2.679734E+04 2.664419E+04 1.339867E+04

218197 1016 2.790021E+04 2.766761E+04 1.395011E+04 2.706154E+04 2.652661E+04 1.353077E+04

218231 1016 2.652334E+04 2.687387E+04 1.355879E+04 2.634449E+04 2.617935E+04 1.317224E+04

$
$
SELECT QUAD4-STRESSES
SORT VAR = MAXABS(MAX-SHEAR-TOP);OPT=12
PRINT 7 9 10 11 13 14;
HEADING = 'MAX TOP SHEAR STRESSES BASED ALL CASES';
NCASES =15

ID SUBCASE MAX-PRIN-TOP VON-MISES-TOP MAX-SHEAR-TOP MAX-PRIN-BOT VON-MISES-BOT MAX-SHEAR-BOT

213536 1016 -1.091394E-11 2.767600E+04 1.434296E+04 -5.456968E-12 2.687451E+04 1.388281E+04

213623 1016 -3.637979E-12 2.748134E+04 1.420950E+04 0.000000E+00 2.766113E+04 1.431163E+04

213625 1016 -7.275958E-12 2.740965E+04 1.417285E+04 3.637979E-12 2.735323E+04 1.414066E+04

218235 1016 2.808028E+04 2.785276E+04 1.404014E+04 2.732786E+04 2.677373E+04 1.366393E+04

212385 1016 2.080089E+03 2.703967E+04 1.400982E+04 0.000000E+00 1.395237E+04 7.163542E+03

212386 1016 2.202186E+03 2.692194E+04 1.397770E+04 -3.637979E-12 1.400390E+04 7.153398E+03

213538 1016 -1.637090E-11 2.704159E+04 1.397211E+04 -1.273293E-11 2.742826E+04 1.419931E+04

218233 1016 2.741941E+04 2.767168E+04 1.395862E+04 2.696044E+04 2.682093E+04 1.348022E+04

218197 1016 2.790021E+04 2.766761E+04 1.395011E+04 2.706154E+04 2.652661E+04 1.353077E+04

218199 1016 2.714270E+04 2.740313E+04 1.382817E+04 2.679734E+04 2.664419E+04 1.339867E+04

213621 1016 4.126848E+02 2.737201E+04 1.378801E+04 4.479221E+02 2.729752E+04 1.375936E+04

217387 1016 2.748222E+04 2.720316E+04 1.374111E+04 2.617061E+04 2.567829E+04 1.308531E+04

212384 1016 1.466157E+03 2.667201E+04 1.368742E+04 -6.366463E-12 1.410959E+04 7.110545E+03

213627 1016 3.993749E+02 2.710134E+04 1.364941E+04 3.902262E+02 2.709783E+04 1.364542E+04

217385 1016 2.677691E+04 2.703834E+04 1.364620E+04 2.623528E+04 2.607760E+04 1.311764E+04

```
### $
### $
### SELECT QUAD4-STRESSES
### SORT VAR = MAXABS(MAX-SHEAR-BOT);OPT=12
### PRINT 7 9 10 11 13 14;
### HEADING = 'MAX BOT SHEAR STRESSES BASED ALL CASES';
### NCASES =15
```

ID	SUBCASE	MAX-PRIN-TOP	VON-MISES-TOP	MAX-SHEAR-TOP	MAX-PRIN-BOT	VON-MISES-BOT	MAX-SHEAR-BOT
212434	1016	4.281181E+03	1.051642E+04	5.990880E+03	7.046368E+03	2.722458E+04	1.502752E+04
213956	1016	0.000000E+00	2.475988E+04	1.295045E+04	9.094947E-12	2.834287E+04	1.487459E+04
212436	1016	1.975590E+03	1.538566E+04	8.139016E+03	9.229614E+03	2.588557E+04	1.461770E+04
213623	1016	-3.637979E-12	2.748134E+04	1.420950E+04	0.000000E+00	2.766113E+04	1.431163E+04
213538	1016	-1.637090E-11	2.704159E+04	1.397211E+04	-1.273293E-11	2.742826E+04	1.419931E+04
213625	1016	-7.275958E-12	2.740965E+04	1.417285E+04	3.637979E-12	2.735323E+04	1.414066E+04
212319	1016	4.081332E+03	9.420392E+03	5.386419E+03	6.235595E+03	2.566606E+04	1.410466E+04
212318	1016	1.689926E+03	1.444299E+04	7.606804E+03	9.345216E+03	2.485585E+04	1.408698E+04
213536	1016	-1.091394E-11	2.767600E+04	1.434296E+04	-5.456968E-12	2.687451E+04	1.388281E+04
213621	1016	4.126848E+02	2.737201E+04	1.378801E+04	4.479221E+02	2.729752E+04	1.375936E+04
218235	1016	2.808028E+04	2.785276E+04	1.404014E+04	2.732786E+04	2.677373E+04	1.366393E+04
213627	1016	3.993749E+02	2.710134E+04	1.364941E+04	3.902262E+02	2.709783E+04	1.364542E+04
213540	1016	3.960877E+02	2.703616E+04	1.361602E+04	4.007606E+02	2.708968E+04	1.364392E+04
218197	1016	2.790021E+04	2.766761E+04	1.395011E+04	2.706154E+04	2.652661E+04	1.353077E+04
213534	1016	4.463118E+02	2.687626E+04	1.354832E+04	4.429713E+02	2.682457E+04	1.352166E+04

```
### $
### $
### SELECT QUAD4-STRESSES
### SORT VAR = MAXABS(MIN-PRIN-TOP);OPT=12
### PRINT 8 9 10 12 13 14;
### HEADING = 'MAX MIN-PRIN TOP STRESSES BASED ALL CASES';
### NCASES =15
```

ID	SUBCASE	MIN-PRIN-TOP	VON-MISES-TOP	MAX-SHEAR-TOP	MIN-PRIN-BOT	VON-MISES-BOT	MAX-SHEAR-BOT
213536	1016	-2.868592E+04	2.767600E+04	1.434296E+04	-2.776562E+04	2.687451E+04	1.388281E+04
213623	1016	-2.841899E+04	2.748134E+04	1.420950E+04	-2.862326E+04	2.766113E+04	1.431163E+04
213625	1016	-2.834571E+04	2.740965E+04	1.417285E+04	-2.828132E+04	2.735323E+04	1.414066E+04
213538	1016	-2.794421E+04	2.704159E+04	1.397211E+04	-2.839863E+04	2.742826E+04	1.419931E+04
213621	1016	-2.716333E+04	2.737201E+04	1.378801E+04	-2.707080E+04	2.729752E+04	1.375936E+04
213627	1016	-2.689944E+04	2.710134E+04	1.364941E+04	-2.690061E+04	2.709783E+04	1.364542E+04
213540	1016	-2.683594E+04	2.703616E+04	1.361602E+04	-2.688708E+04	2.708968E+04	1.364392E+04
213534	1016	-2.665032E+04	2.687626E+04	1.354832E+04	-2.660034E+04	2.682457E+04	1.352166E+04
213633	1016	-2.640713E+04	2.556931E+04	1.320356E+04	-2.628996E+04	2.546765E+04	1.314498E+04

214043 1016 -2.639208E+04 2.516500E+04 1.319604E+04 -2.685567E+04 2.561445E+04 1.342783E+04

213546 1016 -2.627309E+04 2.547251E+04 1.313654E+04 -2.682770E+04 2.594928E+04 1.341385E+04

212385 1016 -2.593955E+04 2.703967E+04 1.400982E+04 -1.432708E+04 1.395237E+04 7.163542E+03

212384 1016 -2.590869E+04 2.667201E+04 1.368742E+04 -1.422109E+04 1.410959E+04 7.110546E+03

213347 1016 -2.590429E+04 2.459726E+04 1.295215E+04 -2.236421E+04 2.128175E+04 1.118210E+04

213956 1016 -2.590089E+04 2.475988E+04 1.295045E+04 -2.974919E+04 2.834287E+04 1.487459E+04

```
### $
### $
### SELECT QUAD4-STRESSES
### SORT VAR = MAXABS(MIN-PRIN-BOT);OPT=12
### PRINT 8 9 10 12 13 14;
### HEADING = 'MAX MIN-PRIN BOT STRESSES BASED ALL CASES';
### NCASES =15
```

ID SUBCASE MIN-PRIN-TOP VON-MISES-TOP MAX-SHEAR-TOP MIN-PRIN-BOT VON-MISES-BOT MAX-SH

213956 1016 -2.590089E+04 2.475988E+04 1.295045E+04 -2.974919E+04 2.834287E+04 1.487459E+04

213623 1016 -2.841899E+04 2.748134E+04 1.420950E+04 -2.862326E+04 2.766113E+04 1.431163E+04

213538 1016 -2.794421E+04 2.704159E+04 1.397211E+04 -2.839863E+04 2.742826E+04 1.419931E+04

213625 1016 -2.834571E+04 2.740965E+04 1.417285E+04 -2.828132E+04 2.735323E+04 1.414066E+04

213536 1016 -2.868592E+04 2.767600E+04 1.434296E+04 -2.776562E+04 2.687451E+04 1.388281E+04

213621 1016 -2.716333E+04 2.737201E+04 1.378801E+04 -2.707080E+04 2.729752E+04 1.375936E+04

213627 1016 -2.689944E+04 2.710134E+04 1.364941E+04 -2.690061E+04 2.709783E+04 1.364542E+04

213540 1016 -2.683594E+04 2.703616E+04 1.361602E+04 -2.688708E+04 2.708968E+04 1.364392E+04

214043 1016 -2.639208E+04 2.516500E+04 1.319604E+04 -2.685567E+04 2.561445E+04 1.342783E+04

213546 1016 -2.627309E+04 2.547251E+04 1.313654E+04 -2.682770E+04 2.594928E+04 1.341385E+04

213534 1016 -2.665032E+04 2.687626E+04 1.354832E+04 -2.660034E+04 2.682457E+04 1.352166E+04

213633 1016 -2.640713E+04 2.556931E+04 1.320356E+04 -2.628996E+04 2.546765E+04 1.314498E+04

213869 1016 -2.005221E+04 1.941305E+04 1.002610E+04 -2.620680E+04 2.508951E+04 1.310340E+04

213619 1016 -2.585886E+04 2.587234E+04 1.294290E+04 -2.567068E+0

213542 1016 -2.572510E+04 2.584348E+04 1.298013E+04 -2.558986E+0

```
### SELECT TRIA3-STRESSES
### SORT VAR = MAXABS(MAX-PRIN-TOP);OPT=12
### PRINT 7 9 10 11 13 14;
### HEADING = 'MAX TOP PRIN STRESSES BASED ALL CASES';
### NCASES =15
```

ID SUBCASE MAX-PRIN-TOP VON-MISES-TOP MAX-SHEAR-TOP MA EAR-BOT

251669 1016 2.152724E+04 4.065905E+04 2.344830E+04 2.205881E+04 4.302254E+04 2.478901E+04

251664 1016 1.961143E+04 3.808588E+04 2.194749E+04 1.894334E+04 3.527804E+04 2.035155E+04

251752 1016 1.562155E+04 1.724490E+04 9.252399E+03 1.162547E+04 1.083066E+04 5.812736E+03

251751 1016 1.368001E+04 1.533708E+04 8.290036E+03 1.025902E+04 8.958514E+03 5.129510E+03

212445	1016	1.238096E+04	1.156776E+04	6.190481E+03	5.118414E-01	1.285463E+04	6.427444E+03
212335	1016	1.094474E+04	1.006523E+04	5.472371E+03	1.818989E-12	1.259410E+04	6.381910E+03
251740	1016	1.037187E+04	1.416869E+04	8.071791E+03	9.053170E+03	8.154529E+03	4.526585E+03
251662	1016	1.021691E+04	1.106477E+04	5.876135E+03	9.427841E+03	1.088466E+04	5.956011E+03
251761	1016	9.820149E+03	1.095962E+04	5.911439E+03	5.865078E+03	7.349433E+03	3.676547E+03
251738	1016	9.743128E+03	2.028574E+04	1.165959E+04	1.385856E+04	1.203188E+04	6.929282E+03
212444	1016	9.638521E+03	8.840808E+03	4.819261E+03	-6.366463E-12	1.307869E+04	5.904708E+03
251657	1016	9.216105E+03	9.724672E+03	5.081921E+03	7.976082E+03	9.743143E+03	5.429694E+03
251617	1016	9.028977E+03	9.180184E+03	4.662132E+03	7.063074E+03	8.395811E+03	4.641285E+03
212336	1016	8.648115E+03	7.946516E+03	4.324057E+03	-6.366463E-12	1.270903E+04	6.733458E+03
251667	1016	8.407123E+03	9.833692E+03	5.406766E+03	9.739490E+03	1.088196E+04	5.872672E+03

```
### $
### $
### SELECT TRIA3-STRESSES
### SORT VAR = MAXABS(MAX-PRIN-BOT);OPT=12
### PRINT 7 9 10 11 13 14;
### HEADING = 'MAX BOT PRIN STRESSES BASED ALL CASES';
### NCASES =15
```

ID	SUBCASE	MAX-PRIN-TOP	VON-MISES-TOP	MAX-SHEAR-TOP	MAX-PRIN-BOT	VON-MISES-BOT	MAX-SHEAR-BOT
251669	1016	2.152724E+04	4.065905E+04	2.344830E+04	2.205881E+04	4.302254E+04	2.478901E+04
251664	1016	1.961143E+04	3.808588E+04	2.194749E+04	1.894334E+04	3.527804E+04	2.035155E+04
251741	1016	-4.547474E-12	1.078680E+04	5.792118E+03	1.648621E+04	1.446443E+04	8.243103E+03
251738	1016	9.743128E+03	2.028574E+04	1.165959E+04	1.385856E+04	1.203188E+04	6.929282E+03
251739	1016	6.949164E+03	1.581232E+04	9.048433E+03	1.235826E+04	1.071106E+04	6.179129E+03
251752	1016	1.562155E+04	1.724490E+04	9.252399E+03	1.162547E+04	1.083066E+04	5.812736E+03
212366	1016	1.379524E+03	1.948940E+04	1.007125E+04	1.096560E+04	2.015589E+04	1.163067E+04
251743	1016	-2.728484E-12	8.150065E+03	4.542302E+03	1.092844E+04	1.020507E+04	5.464219E+03
251672	1016	7.652882E+03	9.784550E+03	5.512265E+03	1.086517E+04	1.090759E+04	5.474759E+03
251751	1016	1.368001E+04	1.533708E+04	8.290036E+03	1.025902E+04	8.958514E+03	5.129510E+03
251667	1016	8.407123E+03	9.833692E+03	5.406766E+03	9.739490E+03	1.088196E+04	5.872672E+03
251662	1016	1.021691E+04	1.106477E+04	5.876135E+03	9.427841E+03	1.088466E+04	5.956011E+03
251740	1016	1.037187E+04	1.416869E+04	8.071791E+03	9.053170E+03	8.154529E+03	4.526585E+03
212402	1016	2.253996E+03	1.929029E+04	1.015913E+04	8.979003E+03	2.027389E+04	1.160642E+04
212482	1016	-1.818989E-12	6.420508E+03	3.701678E+03	8.017625E+03	7.178448E+03	4.008812E+03

```
### $
### $
### SELECT TRIA3-STRESSES
### SORT VAR = MAXABS(VON-MISES-TOP);OPT=12
### PRINT 7 9 10 11 13 14;
### HEADING = 'MAX TOP YEILD STRESSES BASED ALL CASES';
### NCASES =15
```

ID	SUBCASE	MAX-PRIN-TOP	VON-MISES-TOP	MAX-SHEAR-TOP	MAX-PRIN-BOT	VON-MISES-BOT	MAX-SHEAR-BOT
251669	1016	2.152724E+04	4.065905E+04	2.344830E+04	2.205881E+04	4.302254E+04	2.478901E+04
251664	1016	1.961143E+04	3.808588E+04	2.194749E+04	1.894334E+04	3.527804E+04	2.035155E+04
212389	1016	2.557926E+03	2.876376E+04	1.497865E+04	-2.728484E-12	1.486702E+04	7.653404E+03
212391	1016	2.532107E+03	2.863982E+04	1.491090E+04	-6.366463E-12	1.469940E+04	7.615104E+03
212388	1016	1.200140E+03	2.788674E+04	1.423372E+04	5.588119E+02	1.527037E+04	7.771054E+03
212419	1016	1.042869E+03	2.763643E+04	1.407155E+04	3.969501E+02	1.517214E+04	7.683362E+03
212418	1016	3.224873E+03	2.676001E+04	1.411315E+04	7.479249E+02	1.590713E+04	8.133952E+03
212392	1016	1.905894E+03	2.629247E+04	1.359676E+04	6.873593E+02	1.505795E+04	7.694931E+03
212390	1016	1.621366E+03	2.614656E+04	1.345976E+04	3.637979E-12	1.311176E+04	7.167041E+03
241244	1016	2.259063E+03	2.611506E+04	1.358561E+04	-5.456968E-12	1.293814E+04	7.387851E+03
212416	1016	2.909237E+03	2.569702E+04	1.351392E+04	-1.027729E-10	1.546219E+04	7.737638E+03
212361	1016	1.479244E+03	2.492905E+04	1.281787E+04	6.093932E+02	1.515104E+04	7.723272E+03
241241	1016	3.150803E+03	2.452352E+04	1.297332E+04	-2.728484E-12	1.351489E+04	7.601640E+03
212417	1016	2.528271E+03	2.441361E+04	1.278968E+04	-5.456968E-12	1.489468E+04	7.641561E+03
212378	1016	1.723488E+03	2.140561E+04	1.110762E+04	-2.728484E-12	1.001328E+04	5.048743E+03

```
### $
### $
### SELECT TRIA3-STRESSES
### SORT VAR = MAXABS(VON-MISES-BOT);OPT=12
### PRINT 7 9 10 11 13 14;
### HEADING = 'MAX BOT YEILD STRESSES BASED ALL CASES';
### NCASES =15
```

ID	SUBCASE	MAX-PRIN-TOP	VON-MISES-TOP	MAX-SHEAR-TOP	MAX-PRIN-BOT	VON-MISES-BOT	MAX-SHEAR-BOT
251669	1016	2.152724E+04	4.065905E+04	2.344830E+04	2.205881E+04	4.302254E+04	2.478901E+04
251664	1016	1.961143E+04	3.808588E+04	2.194749E+04	1.894334E+04	3.527804E+04	2.035155E+04
212447	1016	2.837878E+03	1.558853E+04	8.406254E+03	7.001342E+03	2.521151E+04	1.398610E+04
212321	1016	2.702548E+03	1.508091E+04	8.124729E+03	7.252473E+03	2.460547E+04	1.370829E+04
212433	1016	3.610898E+03	1.515726E+04	8.323421E+03	7.187528E+03	2.336548E+04	1.305744E+04
200547	1016	3.030725E+02	1.442213E+04	7.285637E+03	3.242072E+03	2.189983E+04	1.167007E+04
212323	1016	3.432991E+03	1.414884E+04	7.774723E+03	6.137034E+03	2.098981E+04	1.168715E+04
212431	1016	-1.728040E-11	1.363715E+04	6.870278E+03	6.072049E+03	2.050974E+04	1.143009E+04
212325	1016	6.331713E+02	1.218585E+04	6.245047E+03	4.880067E+03	2.036860E+04	1.118268E+04
200545	1016	2.881841E+03	1.247408E+04	6.831389E+03	8.803069E+02	2.030166E+04	1.036375E+04

212402 1016 2.253996E+03 1.929029E+04 1.015913E+04 8.979003E+03 2.027389E+04 1.160542E+04

212366 1016 1.379524E+03 1.948940E+04 1.007125E+04 1.096560E+04 2.015589E+04 1.163067E+04

200511 1016 4.228778E+02 1.303549E+04 6.620892E+03 2.643114E+03 2.008828E+04 1.063950E+04

212432 1016 3.120562E+03 1.375223E+04 7.522182E+03 3.348238E+03 1.927277E+04 1.036375E+04

212352 1016 4.178947E+03 1.711654E+04 9.409517E+03 2.856592E+03 1.896854E+04 1.011741E+04

```
### $
### $
### SELECT TRIA3-STRESSES
### SORT VAR = MAXABS(MAX-SHEAR-TOP);OPT=12
### PRINT 7 9 10 11 13 14;
### HEADING = 'MAX TOP SHEAR STRESSES BASED ALL CASES';
### NCASES =15
```

ID SUBCASE MAX-PRIN-TOP VON-MISES-TOP MAX-SHEAR-TOP MAX-PRIN-BOT VON-MISES-BOT MAX-SHEAR-BOT

251669 1016 2.152724E+04 4.065905E+04 2.344830E+04 2.205881E+04 4.302254E+04 2.478901E+04

251664 1016 1.961143E+04 3.808588E+04 2.194749E+04 1.894334E+04 3.527804E+04 2.035155E+04

212389 1016 2.557926E+03 2.876376E+04 1.497865E+04 -2.728484E-12 1.486702E+04 7.653404E+03

212391 1016 2.532107E+03 2.863982E+04 1.491090E+04 -6.366463E-12 1.469940E+04 7.615104E+03

212388 1016 1.200140E+03 2.788674E+04 1.423372E+04 5.588119E+02 1.527037E+04 7.771054E+03

212418 1016 3.224873E+03 2.676001E+04 1.411315E+04 7.479249E+02 1.590713E+04 8.133952E+03

212419 1016 1.042869E+03 2.763643E+04 1.407155E+04 3.969501E+02 1.517214E+04 7.683362E+03

212392 1016 1.905894E+03 2.629247E+04 1.359678E+04 6.873593E+02 1.505795E+04 7.694931E+03

241244 1016 2.259063E+03 2.611506E+04 1.358561E+04 -5.456968E-12 1.293814E+04 7.387851E+03

212416 1016 2.909237E+03 2.569702E+04 1.351392E+04 -1.027729E-10 1.546219E+04 7.737638E+03

212390 1016 1.621366E+03 2.614656E+04 1.345976E+04 3.637979E-12 1.311176E+04 7.167041E+03

241241 1016 3.150803E+03 2.452352E+04 1.297332E+04 -2.728484E-12 1.351489E+04 7.601640E+03

212361 1016 1.479244E+03 2.492905E+04 1.281787E+04 6.093932E+02 1.515104E+04 7.723272E+03

212417 1016 2.528271E+03 2.441361E+04 1.278968E+04 -5.456968E-12 1.489468E+04 7.641561E+03

251738 1016 9.743128E+03 2.028574E+04 1.165959E+04 1.385856E+04 1.203188E+04 6.929282E+03

```
### $
### $
### SELECT TRIA3-STRESSES
### SORT VAR = MAXABS(MAX-SHEAR-BOT);OPT=12
### PRINT 7 9 10 11 13 14;
### HEADING = 'MAX BOT SHEAR STRESSES BASED ALL CASES';
### NCASES =15
```

ID SUBCASE MAX-PRIN-TOP VON-MISES-TOP MAX-SHEAR-TOP MAX-PRIN-BOT VON-MISES-BOT MAX-SHEAR-BOT

251669 1016 2.152724E+04 4.065905E+04 2.344830E+04 2.205881E+04 4.302254E+04 2.478901E+04

251664 1016 1.961143E+04 3.808588E+04 2.194749E+04 1.894334E+04 3.527804E+04 2.035155E+04

212447 1016 2.837878E+03 1.558853E+04 8.406254E+03 7.001342E+03 2.521151E+04 1.398610E+04

212321 1016 2.702548E+03 1.508091E+04 8.124729E+03 7.252473E+03 2.460547E+04 1.370829E+04

212433	1016	3.610898E+03	1.516726E+04	8.323421E+03	7.187528E+03	2.336548E+04	1.305744E+04
212323	1016	3.432991E+03	1.414884E+04	7.774723E+03	6.137034E+03	2.098981E+04	1.168715E+04
200547	1016	3.030725E+02	1.442213E+04	7.285637E+03	3.242072E+03	2.189983E+04	1.167007E+04
212366	1016	1.379524E+03	1.948940E+04	1.007125E+04	1.096560E+04	2.015589E+04	1.163067E+04
212402	1016	2.253996E+03	1.929029E+04	1.015913E+04	8.979003E+03	2.027389E+04	1.160642E+04
212431	1016	-1.728040E-11	1.363715E+04	6.870278E+03	6.072049E+03	2.050974E+04	1.143009E+04
212325	1016	6.331713E+02	1.218585E+04	6.245047E+03	4.880067E+03	2.036860E+04	1.118268E+04
200511	1016	4.228778E+02	1.303549E+04	6.620892E+03	2.643114E+03	2.008828E+04	1.063950E+04
212432	1016	3.120562E+03	1.375223E+04	7.522182E+03	3.348238E+03	1.927277E+04	1.036375E+04
200545	1016	2.881841E+03	1.247408E+04	6.831389E+03	8.803069E+02	2.030166E+04	1.036375E+04
251549	1016	7.759663E+03	1.738967E+04	9.959289E+03	7.945378E+03	1.803381E+04	1.032108E+04

```
### $
### $
### SELECT TRIA3-STRESSES
### SORT VAR = MAXABS(MIN-PRIN-TOP);OPT=12
### PRINT 8 9 10 12 13 14;
### HEADING = 'MAX MIN-PRIN TOP STRESSES BASED ALL CASES';
### NCASES =15
```

ID	SUBCASE	MIN-PRIN-TOP	VON-MISES-TOP	MAX-SHEAR-TOP	MIN-PRIN-BOT	VON-MISES-BOT	MAX-SHEAR-BOT
212389	1016	-2.739936E+04	2.876376E+04	1.497865E+04	-1.530681E+04	1.486702E+04	7.653404E+03
212391	1016	-2.728969E+04	2.863982E+04	1.491090E+04	-1.523021E+04	1.469940E+04	7.615104E+03
212388	1016	-2.726729E+04	2.788674E+04	1.423372E+04	-1.498330E+04	1.527037E+04	7.771054E+03
212419	1016	-2.710024E+04	2.763643E+04	1.407155E+04	-1.496977E+04	1.517214E+04	7.683362E+03
251669	1016	-2.536936E+04	4.065905E+04	2.344830E+04	-2.751920E+04	4.302254E+04	2.478901E+04
212390	1016	-2.529815E+04	2.614656E+04	1.345976E+04	-1.433408E+04	1.311176E+04	7.167041E+03
212392	1016	-2.528767E+04	2.629247E+04	1.359678E+04	-1.470250E+04	1.505795E+04	7.694931E+03
212418	1016	-2.500144E+04	2.676001E+04	1.411315E+04	-1.551998E+04	1.590713E+04	8.133952E+03
241244	1016	-2.491215E+04	2.611506E+04	1.358561E+04	-1.477570E+04	1.293814E+04	7.387851E+03
251664	1016	-2.428355E+04	3.808588E+04	2.194749E+04	-2.175976E+04	3.527804E+04	2.035155E+04
212361	1016	-2.415649E+04	2.492905E+04	1.281787E+04	-1.483715E+04	1.515104E+04	7.723272E+03
212416	1016	-2.411859E+04	2.569702E+04	1.351392E+04	-1.547528E+04	1.546219E+04	7.737638E+03
212417	1016	-2.305109E+04	2.441361E+04	1.278968E+04	-1.528312E+04	1.489468E+04	7.641561E+03
241241	1016	-2.279584E+04	2.452352E+04	1.297332E+04	-1.520328E+04	1.351489E+04	7.601640E+03
212378	1016	-2.049176E+04	2.140561E+04	1.110762E+04	-1.009749E+04	1.001328E+04	5.048743E+03

```
  ### $
  ### $
  ### SELECT TRIA3-STRESSES
  ### SORT VAR = MAXABS(MIN-PRIN-BOT);OPT=12
  ### PRINT 8 9 10 12 13 14;
  ### HEADING = 'MAX MIN-PRIN BOT STRESSES BASED ALL CASES';
  ### NCASES =15
```

ID	SUBCASE	MIN-PRIN-TOP	VON-MISES-TOP	MAX-SHEAR-TOP	MIN-PRIN-BOT	VON-MISES-BOT	MAX-SHEAR-BOT
251669	1016	-2.536936E+04	4.065905E+04	2.344830E+04	-2.751920E+04	4.302254E+04	2.478901E+04
251664	1016	-2.428355E+04	3.808588E+04	2.194749E+04	-2.175976E+04	3.527804E+04	2.035155E+04
212447	1016	-1.397463E+04	1.558853E+04	8.406254E+03	-2.097087E+04	2.521151E+04	1.398610E+04
212321	1016	-1.354691E+04	1.508091E+04	8.124729E+03	-2.016410E+04	2.460547E+04	1.370829E+04
200547	1016	-1.426820E+04	1.442213E+04	7.285637E+03	-2.009807E+04	2.189983E+04	1.167007E+04
200545	1016	-1.078094E+04	1.247408E+04	6.831389E+03	-1.984719E+04	2.030166E+04	1.036375E+04
212433	1016	-1.303594E+04	1.516726E+04	8.323421E+03	-1.892734E+04	2.336548E+04	1.305744E+04
200511	1016	-1.281891E+04	1.303549E+04	6.620692E+03	-1.863589E+04	2.008828E+04	1.063950E+04
212298	1016	-3.631505E+03	8.569759E+03	4.893786E+03	-1.782963E+04	1.648365E+04	8.914815E+03
212325	1016	-1.185692E+04	1.218585E+04	6.245047E+03	-1.748530E+04	2.036860E+04	1.118268E+04
212432	1016	-1.192380E+04	1.375223E+04	7.522182E+03	-1.737927E+04	1.927277E+04	1.036375E+04
212352	1016	-1.464009E+04	1.711654E+04	9.409517E+03	-1.737823E+04	1.896854E+04	1.011741E+04
241247	1016	-1.613167E+04	1.995498E+04	1.115731E+04	-1.732088E+04	1.765088E+04	8.981668E+03
212323	1016	-1.211645E+04	1.414884E+04	7.774723E+03	-1.723726E+04	2.098981E+04	1.168715E+04
200510	1016	-1.006146E+04	1.126243E+04	6.083196E+03	-1.704952E+04	1.756989E+04	9.023852E+03

```
  ### $
  ### EXIT
*** NORMAL EXIT: EXIT
END OF JOB
```

$ punch files of load cases-1000 for sorting out
FILES '/hsm/swang/ams02/nonlin/flange-new/1000/6-02/R1032.pch'
SELECT QUAD4-STRESSES
SORT VAR = MAXABS(MAX-PRIN-TOP);OPT=12
PRINT 7 9 10 11 13 14;
HEADING = 'MAX TOP PRIN STRESSES BASED ALL CASES';
NCASES =15

ID	SUBCASE	MAX-PRIN-TOP	VON-MISES-TOP	MAX-SHEAR-TOP	MAX-PRIN-BOT	VON-MISES-BOT	MAX-SHEAR-BOT
218235	1032	2.714983E+04	2.693070E+04	1.357491E+04	2.643457E+04	2.590183E+04	1.321728E+04
202516	1032	2.704516E+04	2.594872E+04	1.352258E+04	-1.818989E-12	1.741891E+04	9.871914E+03
218197	1032	2.695424E+04	2.673060E+04	1.347712E+04	2.615844E+04	2.564381E+04	1.307922E+04
217387	1032	2.661109E+04	2.634108E+04	1.330554E+04	2.535418E+04	2.488060E+04	1.267709E+04
218233	1032	2.656575E+04	2.680963E+04	1.352352E+04	2.614065E+04	2.600459E+04	1.307032E+04
217429	1032	2.630843E+04	2.611872E+04	1.315421E+04	2.577932E+04	2.526195E+04	1.288966E+04
218199	1032	2.626800E+04	2.652004E+04	1.338255E+04	2.595519E+04	2.580592E+04	1.297759E+04
217445	1032	2.624918E+04	2.600086E+04	1.312459E+04	2.522426E+04	2.471696E+04	1.261213E+04
217385	1032	2.596722E+04	2.622090E+04	1.323372E+04	2.546669E+04	2.531279E+04	1.273334E+04
218231	1032	2.584655E+04	2.608911E+04	1.316254E+04	2.558558E+04	2.542629E+04	1.279279E+04
218201	1032	2.565633E+04	2.589352E+04	1.306218E+04	2.539045E+04	2.523502E+04	1.269522E+04
217447	1032	2.561733E+04	2.585766E+04	1.304574E+04	2.505826E+04	2.492270E+04	1.252913E+04
217431	1032	2.559640E+04	2.583087E+04	1.302956E+04	2.530822E+04	2.517487E+04	1.265411E+04
217383	1032	2.549719E+04	2.573708E+04	1.298522E+04	2.502643E+04	2.487023E+04	1.251322E+04
217371	1032	2.548488E+04	2.529784E+04	1.274244E+04	2.499343E+04	2.448473E+04	1.249671E+04

$
$
SELECT QUAD4-STRESSES
SORT VAR = MAXABS(MAX-PRIN-BOT);OPT=12
PRINT 7 9 10 11 13 14;
HEADING = 'MAX BOT PRIN STRESSES BASED ALL CASES';
NCASES =15

ID	SUBCASE	MAX-PRIN-TOP	VON-MISES-TOP	MAX-SHEAR-TOP	MAX-PRIN-BOT	VON-MISES-BOT	MAX-SHEAR-BOT
218235	1032	2.714983E+04	2.693070E+04	1.357491E+04	2.643457E+04	2.590183E+04	1.321728E+04
218197	1032	2.695424E+04	2.673060E+04	1.347712E+04	2.615844E+04	2.564381E+04	1.307922E+04
218233	1032	2.656575E+04	2.680963E+04	1.352352E+04	2.614065E+04	2.600459E+04	1.307032E+04
218199	1032	2.626800E+04	2.652004E+04	1.338255E+04	2.595519E+04	2.580592E+04	1.297759E+04
217429	1032	2.630843E+04	2.611872E+04	1.315421E+04	2.577932E+04	2.526195E+04	1.288966E+04
218231	1032	2.584655E+04	2.608911E+04	1.316254E+04	2.558558E+04	2.542629E+04	1.279279E+04
217385	1032	2.596722E+04	2.622090E+04	1.323372E+04	2.546669E+04	2.531279E+04	1.273334E+04
218201	1032	2.565633E+04	2.589352E+04	1.306218E+04	2.539045E+04	2.523502E+04	1.269522E+04
217387	1032	2.661109E+04	2.634108E+04	1.330554E+04	2.535418E+04	2.488060E+04	1.267709E+04
217431	1032	2.559640E+04	2.583087E+04	1.302956E+04	2.530822E+04	2.517487E+04	1.265411E+04

```
217445   1032 2.624918E+04 2.600086E+04 1.312459E+04 2.522426E+04 2.471696E+04 1.261213E+04

217447   1032 2.561733E+04 2.585766E+04 1.304574E+04 2.505826E+04 2.492270E+04 1.252913E+04

217383   1032 2.549719E+04 2.573708E+04 1.298522E+04 2.502643E+04 2.487023E+04 1.251322E+04

217371   1032 2.548488E+04 2.529784E+04 1.274244E+04 2.499343E+04 2.448473E+04 1.249671E+04

217433   1032 2.487872E+04 2.511966E+04 1.267693E+04 2.475845E+04 2.460606E+04 1.237922E+04

 ### $
 ### $
 ### SELECT QUAD4-STRESSES
 ### SORT VAR = MAXABS(VON-MISES-TOP);OPT=12
 ### PRINT 7 9 10 11 13 14;
 ### HEADING = 'MAX TOP YEILD STRESSES BASED ALL CASES';
 ### NCASES =15

 ID   SUBCASE  MAX-PRIN-TOP VON-MISES-TOP MAX-SHEAR-TOP  MAX-PRIN-BOT VON-MISES-BOT MAX-SHEAR-BOT

213623   1032 -3.637979E-12 2.753950E+04 1.423739E+04 0.000000E+00 2.774496E+04 1.435529E+04

213625   1032 0.000000E+00 2.751739E+04 1.422914E+04 -1.818989E-12 2.740006E+04 1.416231E+04

213536   1032 -1.091394E-11 2.745702E+04 1.422929E+04 -3.637979E-12 2.669577E+04 1.379326E+04

213621   1032 4.195762E+02 2.741620E+04 1.381179E+04 4.432895E+02 2.736072E+04 1.378984E+04

213627   1032 3.969700E+02 2.719190E+04 1.369411E+04 3.928329E+02 2.716783E+04 1.368106E+04

212385   1032 2.088730E+03 2.696011E+04 1.397186E+04 -5.456968E-12 1.390398E+04 7.143375E+03

218235   1032 2.714983E+04 2.693070E+04 1.357491E+04 2.643457E+04 2.590183E+04 1.321728E+04

213538   1032 -1.818989E-12 2.688553E+04 1.389458E+04 -1.455192E-11 2.720200E+04 1.408168E+04

213540   1032 3.916184E+02 2.686584E+04 1.352976E+04 4.016896E+02 2.689787E+04 1.354923E+04

218233   1032 2.656575E+04 2.680963E+04 1.352352E+04 2.614065E+04 2.600459E+04 1.307032E+04

218197   1032 2.695424E+04 2.673060E+04 1.347712E+04 2.615844E+04 2.564381E+04 1.307922E+04

212386   1032 2.202001E+03 2.672684E+04 1.387986E+04 -1.818989E-12 1.391085E+04 7.109672E+03

213534   1032 4.494158E+02 2.667040E+04 1.344613E+04 4.345726E+02 2.663956E+04 1.342710E+04

212384   1032 1.490648E+03 2.665802E+04 1.368603E+04 4.547474E-12 1.407985E+04 7.103392E+03

218199   1032 2.626800E+04 2.652004E+04 1.338255E+04 2.595519E+04 2.580592E+04 1.297759E+04

 ### $
 ### $
 ### SELECT QUAD4-STRESSES
 ### SORT VAR = MAXABS(VON-MISES-BOT);OPT=12
 ### PRINT 7 9 10 11 13 14;
 ### HEADING = 'MAX BOT YEILD STRESSES BASED ALL CASES';
 ### NCASES =15

 ID   SUBCASE  MAX-PRIN-TOP VON-MISES-TOP MAX-SHEAR-TOP  MAX-PRIN-BOT VON-MISES-BOT MAX-SHEAR-BOT

213623   1032 3.637979E-12 2.753950E+04 1.423739E+04 0.000000E+00 2.774496E+04 1.435529E+04

213956   1032 -9.094947E-12 2.434981E+04 1.275182E+04 -9.094947E-12 2.772438E+04 1.456636E+04

212434   1032 4.398824E+03 1.060165E+04 6.046492E+03 6.956686E+03 2.746930E+04 1.513941E+04

213625   1032 0.000000E+00 2.751739E+04 1.422914E+04 -1.818989E-12 2.740006E+04 1.416231E+04
```

213621 1032 4.195762E+02 2.741620E+04 1.381179E+04 4.432895E+02 2.736072E+04 1.378984E+04

213538 1032 -1.818989E-12 2.688553E+04 1.389458E+04 -1.455192E-11 2.720200E+04 1.408168E+04

213627 1032 3.969700E+02 2.719190E+04 1.369411E+04 3.928329E+02 2.716783E+04 1.368106E+04

213540 1032 3.916184E+02 2.686584E+04 1.352976E+04 4.016896E+02 2.689787E+04 1.354823E+04

213536 1032 -1.091394E-11 2.745702E+04 1.422929E+04 -3.637979E-12 2.669577E+04 1.379326E+04

213534 1032 4.494158E+02 2.667040E+04 1.344613E+04 4.345726E+02 2.663956E+04 1.342710E+04

212436 1032 2.053428E+03 1.545436E+04 8.189208E+03 9.284405E+03 2.618914E+04 1.478325E+04

218233 1032 2.656575E+04 2.680963E+04 1.352352E+04 2.614065E+04 2.600459E+04 1.307032E+04

200542 1032 1.613406E+03 1.258028E+04 6.644511E+03 6.583767E+02 2.598620E+04 1.315457E+04

218235 1032 2.714983E+04 2.693070E+04 1.357491E+04 2.643457E+04 2.590183E+04 1.321728E+04

218199 1032 2.626800E+04 2.652004E+04 1.338255E+04 2.595519E+04 2.580592E+04 1.297759E+04

$
$
SELECT QUAD4-STRESSES
SORT VAR = MAXABS(MAX-SHEAR-TOP);OPT=12
PRINT 7 9 10 11 13 14;
HEADING = 'MAX TOP SHEAR STRESSES BASED ALL CASES';
NCASES =15

ID SUBCASE MAX-PRIN-TOP VON-MISES-TOP MAX-SHEAR-TOP MAX-PRIN-BOT VON-MISES-BOT MAX-SHEAR-BOT

213623 1032 -3.637979E-12 2.753950E+04 1.423739E+04 0.000000E+00 2.774496E+04 1.435529E+04

213536 1032 -1.091394E-11 2.745702E+04 1.422929E+04 -3.637979E-12 2.669577E+04 1.379326E+04

213625 1032 0.000000E+00 2.751739E+04 1.422914E+04 -1.818989E-12 2.740006E+04 1.416231E+04

212385 1032 2.088730E+03 2.696011E+04 1.397186E+04 -5.456968E-12 1.390398E+04 7.143375E+03

213538 1032 -1.818989E-12 2.688553E+04 1.389458E+04 -1.455192E-11 2.720200E+04 1.408168E+04

212386 1032 2.202001E+03 2.672684E+04 1.387986E+04 -1.818989E-12 1.391085E+04 7.109672E+03

213621 1032 4.195762E+02 2.741620E+04 1.381179E+04 4.432895E+02 2.736072E+04 1.378984E+04

213627 1032 3.969700E+02 2.719190E+04 1.369411E+04 3.928329E+02 2.716783E+04 1.368106E+04

212384 1032 1.490648E+03 2.665802E+04 1.368603E+04 4.547474E-12 1.407985E+04 7.103392E+03

212413 1032 2.658544E+03 2.609200E+04 1.365975E+04 2.167476E+02 1.465037E+04 7.378773E+03

218235 1032 2.714983E+04 2.693070E+04 1.357491E+04 2.643457E+04 2.590183E+04 1.321728E+04

213540 1032 3.916184E+02 2.686584E+04 1.352976E+04 4.016896E+02 2.689787E+04 1.354823E+04

218233 1032 2.656575E+04 2.680963E+04 1.352352E+04 2.614065E+04 2.600459E+04 1.307032E+04

202516 1032 2.704516E+04 2.594872E+04 1.352258E+04 -1.818989E-12 1.741891E+04 9.871914E+03

201022 1032 2.897974E+03 2.570876E+04 1.351748E+04 5.147027E+02 1.428528E+04 7.267839E+03

$
$
SELECT QUAD4-STRESSES
SORT VAR = MAXABS(MAX-SHEAR-BOT);OPT=12
PRINT 7 9 10 11 13 14;
HEADING = 'MAX BOT SHEAR STRESSES BASED ALL CASES';
NCASES =15

ID	SUBCASE	MAX-PRIN-TOP	VON-MISES-TOP	MAX-SHEAR-TOP	MAX-PRIN-BOT	VON-MISES-BOT	MAX-SHEAR-BOT
212434	1032	4.398824E+03	1.060165E+04	6.046492E+03	6.956686E+03	2.746930E+04	1.513941E+04
212436	1032	2.053428E+03	1.545436E+04	8.189208E+03	9.284405E+03	2.618914E+04	1.478325E+04
213956	1032	-9.094947E-12	2.434981E+04	1.275182E+04	-9.094947E-12	2.772438E+04	1.456636E+04
213623	1032	-3.637979E-12	2.753950E+04	1.423739E+04	0.000000E+00	2.774496E+04	1.435529E+04
213625	1032	0.000000E+00	2.751739E+04	1.422914E+04	-1.818989E-12	2.740006E+04	1.416231E+04
213538	1032	-1.818989E-12	2.688553E+04	1.389458E+04	-1.455192E-11	2.720200E+04	1.408168E+04
212319	1032	3.969437E+03	9.232653E+03	5.276766E+03	6.261976E+03	2.518594E+04	1.386308E+04
212318	1032	1.622441E+03	1.421605E+04	7.478834E+03	9.218712E+03	2.433953E+04	1.380113E+04
213536	1032	-1.091394E-11	2.745702E+04	1.422929E+04	-3.637979E-12	2.669577E+04	1.379326E+04
213621	1032	4.195762E+02	2.741620E+04	1.381179E+04	4.432895E+02	2.736072E+04	1.378984E+04
213627	1032	3.969700E+02	2.719190E+04	1.369411E+04	3.928329E+02	2.716783E+04	1.368106E+04
213540	1032	3.916184E+02	2.686584E+04	1.352976E+04	4.016895E+02	2.689787E+04	1.354823E+04
212435	1032	9.048127E+03	1.136314E+04	6.376628E+03	4.603931E+03	2.502098E+04	1.350161E+04
213534	1032	4.494158E+02	2.667040E+04	1.344613E+04	4.345726E+02	2.663956E+04	1.342710E+04
213546	1032	1.818989E-12	2.536698E+04	1.308595E+04	5.456968E-12	2.575832E+04	1.331424E+04

```
### $
### $
### SELECT QUAD4-STRESSES
### SORT VAR = MAXABS(MIN-PRIN-TOP);OPT=12
### PRINT 8 9 10 12 13 14;
### HEADING = 'MAX MIN-PRIN TOP STRESSES BASED ALL CASES';
### NCASES =15
```

ID	SUBCASE	MIN-PRIN-TOP	VON-MISES-TOP	MAX-SHEAR-TOP	MIN-PRIN-BOT	VON-MISES-BOT	MAX-SHEAR-BOT
213623	1032	-2.847478E+04	2.753950E+04	1.423739E+04	-2.871058E+04	2.774496E+04	1.435529E+04
213536	1032	-2.845859E+04	2.745702E+04	1.422929E+04	-2.758652E+04	2.669577E+04	1.379326E+04
213625	1032	-2.845828E+04	2.751739E+04	1.422914E+04	-2.832462E+04	2.740006E+04	1.416231E+04
213538	1032	-2.778917E+04	2.688553E+04	1.389458E+04	-2.816337E+04	2.720200E+04	1.408168E+04
213621	1032	-2.720400E+04	2.741620E+04	1.381179E+04	-2.713638E+04	2.736072E+04	1.378984E+04
213627	1032	-2.699124E+04	2.719190E+04	1.369411E+04	-2.696928E+04	2.716783E+04	1.368106E+04
213540	1032	-2.666789E+04	2.686584E+04	1.352976E+04	-2.669478E+04	2.689787E+04	1.354823E+04
213633	1032	-2.653648E+04	2.569272E+04	1.326824E+04	-2.633245E+04	2.551508E+04	1.316623E+04
213534	1032	-2.644285E+04	2.667040E+04	1.344613E+04	-2.641962E+04	2.663956E+04	1.342710E+04
213347	1032	-2.643135E+04	2.512455E+04	1.321567E+04	-2.299073E+04	2.190375E+04	1.149536E+04
213546	1032	-2.617190E+04	2.536698E+04	1.308595E+04	-2.662847E+04	2.575832E+04	1.331424E+04
213619	1032	-2.590319E+04	2.591531E+04	1.296371E+04	-2.569445E+04	2.575149E+04	1.290408E+04
212384	1032	-2.588142E+04	2.665802E+04	1.368603E+04	-1.420678E+04	1.407985E+04	7.103392E+03
214043	1032	-2.587828E+04	2.465665E+04	1.293914E+04	-2.552247E+04	2.432711E+04	1.276124E+04

212385 1032 -2.585499E+04 2.696011E+04 1.397186E+04 -1.428675E+04 1.390398E+04 7.143375E+03

```
### $
### $
### SELECT QUAD4-STRESSES
### SORT VAR = MAXABS(MIN-PRIN-BOT);OPT=12
### PRINT 8 9 10 12 13 14;
### HEADING = 'MAX MIN-PRIN BOT STRESSES BASED ALL CASES';
### NCASES =15
```

ID SUBCASE MIN-PRIN-TOP VON-MISES-TOP MAX-SHEAR-TOP MIN-PRIN-BOT VON-MISES-BOT MAX-SHEAR-BOT

213956 1032 -2.550365E+04 2.434981E+04 1.275182E+04 -2.913273E+04 2.772438E+04 1.456636E+04

213623 1032 -2.847478E+04 2.753950E+04 1.423739E+04 -2.871058E+04 2.774496E+04 1.435529E+04

213625 1032 -2.845828E+04 2.751739E+04 1.422914E+04 -2.832462E+04 2.740006E+04 1.416231E+04

213538 1032 -2.778917E+04 2.688553E+04 1.389458E+04 -2.816337E+04 2.720200E+04 1.408168E+04

213536 1032 -2.845859E+04 2.745702E+04 1.422929E+04 -2.758652E+04 2.669577E+04 1.379326E+04

213621 1032 -2.720400E+04 2.741620E+04 1.381179E+04 -2.713638E+04 2.736072E+04 1.378984E+04

213627 1032 -2.699124E+04 2.719190E+04 1.369411E+04 -2.696928E+04 2.716783E+04 1.368106E+04

213540 1032 -2.666789E+04 2.686584E+04 1.352976E+04 -2.669478E+04 2.689787E+04 1.354823E+04

213546 1032 -2.617190E+04 2.536698E+04 1.308595E+04 -2.662847E+04 2.575832E+04 1.331424E+04

213534 1032 -2.644285E+04 2.667040E+04 1.344613E+04 -2.641962E+04 2.663956E+04 1.342710E+04

213633 1032 -2.653648E+04 2.569272E+04 1.326824E+04 -2.633245E+04 2.551508E+04 1.316623E+04

213869 1032 -1.919504E+04 1.856572E+04 9.597521E+03 -2.580519E+04 2.467340E+04 1.290259E+04

213619 1032 -2.590319E+04 2.591531E+04 1.296371E+04 -2.569445E+04 2.575149E+04 1.290408E+04

213629 1032 -2.568613E+04 2.579988E+04 1.295607E+04 -2.567924E+04 2.580194E+04 1.296145E+04

200542 1032 -1.167562E+04 1.256028E+04 6.644511E+03 -2.565076E+04 2.598620E+04 1.315457E+04

```
### $
### SELECT TRIA3-STRESSES
### SORT VAR = MAXABS(MAX-PRIN-TOP);OPT=12
### PRINT 7 9 10 11 13 14;
### HEADING = 'MAX TOP PRIN STRESSES BASED ALL CASES';
### NCASES =15
```

ID SUBCASE MAX-PRIN-TOP VON-MISES-TOP MAX-SHEAR-TOP MAX-PRIN-BOT VON-MISES-BOT MAX-SHEAR-BOT

251669 1032 2.141053E+04 4.047449E+04 2.334135E+04 2.193426E+04 4.278199E+04 2.465037E+04

251664 1032 1.945020E+04 3.784049E+04 2.180488E+04 1.877685E+04 3.498808E+04 2.018403E+04

251752 1032 1.433960E+04 1.574033E+04 8.420699E+03 1.074760E+04 1.005031E+04 5.373799E+03

251751 1032 1.256315E+04 1.397530E+04 7.526403E+03 9.481747E+03 8.296864E+03 4.740873E+03

212445 1032 1.234025E+04 1.151750E+04 6.170124E+03 -1.000444E-11 1.309304E+04 6.572198E+03

251761 1032 1.159232E+04 1.293429E+04 6.975747E+03 8.440592E+03 8.899129E+03 4.647952E+03

212335 1032 1.096296E+04 1.007987E+04 5.481478E+03 0.000000E+00 1.221161E+04 6.173121E+03

251662 1032 1.024501E+04 1.108630E+04 5.884879E+03 9.226745E+03 1.068145E+04 5.850831E+03

```
251752   1032 9.966429E+03 1.084811E+04 5.777342E+03 6.953409E+03 6.606037E+03 3.476705E+03

212444   1032 9.608979E+03 8.833092E+03 4.804490E+03 -5.456968E-12 1.332827E+04 7.043276E+03

251740   1032 9.583099E+03 1.281854E+04 7.280398E+03 8.390715E+03 7.469081E+03 4.195358E+03

251700   1032 9.297447E+03 1.316344E+04 7.531191E+03 -9.094947E-13 1.123131E+04 6.422359E+03

251657   1032 9.293411E+03 9.745133E+03 5.070715E+03 7.746986E+03 9.509693E+03 5.306554E+03

251738   1032 9.130210E+03 1.824593E+04 1.050437E+04 1.252281E+04 1.090103E+04 6.261407E+03

251705   1032 8.973377E+03 9.386385E+03 4.875507E+03 -6.366463E-12 8.759086E+03 5.050141E+03

 ### $
 ### $
 ### SELECT TRIA3-STRESSES
 ### SORT VAR = MAXABS(MAX-PRIN-BOT);OPT=12
 ### PRINT 7 9 10 11 13 14;
 ### HEADING = 'MAX BOT PRIN STRESSES BASED ALL CASES';
 ### NCASES =15

 ID   SUBCASE  MAX-PRIN-TOP VON-MISES-TOP MAX-SHEAR-TOP  MAX-PRIN-BOT VON-MISES-BOT MAX-SHEAR-BOT

251669   1032 2.141053E+04 4.047449E+04 2.334135E+04 2.193426E+04 4.278199E+04 2.465037E+04

251664   1032 1.945020E+04 3.784049E+04 2.180488E+04 1.877685E+04 3.498808E+04 2.018403E+04

251741   1032 -4.547474E-12 9.295861E+03 4.992687E+03 1.442744E+04 1.272698E+04 7.213721E+03

251738   1032 9.130210E+03 1.824593E+04 1.050437E+04 1.252281E+04 1.090103E+04 6.261407E+03

251739   1032 6.531085E+03 1.413105E+04 8.107632E+03 1.108211E+04 9.600203E+03 5.541056E+03

251752   1032 1.433960E+04 1.574033E+04 8.420699E+03 1.074760E+04 1.005031E+04 5.373799E+03

251672   1032 7.807927E+03 9.935164E+03 5.591511E+03 1.072190E+04 1.082609E+04 5.463672E+03

212366   1032 1.369417E+03 1.920535E+04 9.926701E+03 1.069948E+04 1.969218E+04 1.136283E+04

251667   1032 8.521527E+03 9.955088E+03 5.471095E+03 9.633522E+03 1.079756E+04 5.835615E+03

251751   1032 1.256315E+04 1.397530E+04 7.526403E+03 9.481747E+03 8.296864E+03 4.740873E+03

251759   1032 -4.547474E-13 6.415833E+03 3.505887E+03 9.354017E+03 8.198577E+03 4.677009E+03

251743   1032 -2.728484E-12 6.924790E+03 3.866432E+03 9.314848E+03 8.695288E+03 4.657424E+03

251662   1032 1.024501E+04 1.108630E+04 5.884879E+03 9.226745E+03 1.068145E+04 5.850831E+03

212402   1032 2.274628E+03 1.936780E+04 1.020234E+04 9.159088E+03 2.056319E+04 1.177566E+04

251761   1032 1.159232E+04 1.293429E+04 6.975747E+03 8.440592E+03 8.899129E+03 4.647952E+03

 ### $
 ### $
 ### SELECT TRIA3-STRESSES
 ### SORT VAR = MAXABS(VON-MISES-TOP);OPT=12
 ### PRINT 7 9 10 11 13 14;
 ### HEADING = 'MAX TOP YEILD STRESSES BASED ALL CASES';
 ### NCASES =15

 ID   SUBCASE  MAX-PRIN-TOP VON-MISES-TOP MAX-SHEAR-TOP  MAX-PRIN-BOT VON-MISES-BOT MAX-SHEAR-BOT

251669   1032 2.141053E+04 4.047449E+04 2.334135E+04 2.193426E+04 4.278199E+04 2.465037E+04

251664   1032 1.945020E+04 3.784049E+04 2.180488E+04 1.877685E+04 3.498808E+04 2.018403E+04

212389   1032 2.567964E+03 2.862968E+04 1.491358E+04 -2.728484E-12 1.479996E+04 7.621215E+03
```

212391	1032	2.523405E+03	2.847482E+04	1.482627E+04	-1.818989E-12	1.462036E+04	7.578914E+03
212388	1032	1.233902E+03	2.792896E+04	1.426273E+04	5.213427E+02	1.527350E+04	7.763749E+03
212419	1032	1.098962E+03	2.771148E+04	1.412231E+04	3.588252E+02	1.518037E+04	7.678300E+03
212418	1032	3.258926E+03	2.690995E+04	1.419551E+04	7.716002E+02	1.605596E+04	8.213923E+03
241244	1032	2.284763E+03	2.614180E+04	1.360459E+04	-7.275958E-12	1.294897E+04	7.397194E+03
212390	1032	1.627801E+03	2.601223E+04	1.339395E+04	-1.818989E-12	1.304913E+04	7.134933E+03
212392	1032	1.904005E+03	2.599890E+04	1.344928E+04	6.591660E+02	1.489297E+04	7.605807E+03
212416	1032	2.953508E+03	2.585842E+04	1.360418E+04	6.093615E-11	1.558735E+04	7.798781E+03
212361	1032	1.460951E+03	2.461931E+04	1.265863E+04	5.840205E+02	1.498331E+04	7.633392E+03
212417	1032	2.548825E+03	2.452714E+04	1.285101E+04	0.000000E+00	1.501997E+04	7.705077E+03
241241	1032	3.143771E+03	2.426434E+04	1.284150E+04	-1.818989E-12	1.338266E+04	7.528344E+03
212378	1032	1.725012E+03	2.129568E+04	1.105286E+04	0.000000E+00	9.970435E+03	5.029446E+03

```
### $
### $
### SELECT TRIA3-STRESSES
### SORT VAR = MAXABS(VON-MISES-BOT);OPT=12
### PRINT 7 9 10 11 13 14;
### HEADING = 'MAX BOT YEILD STRESSES BASED ALL CASES';
### NCASES =15
```

ID	SUBCASE	MAX-PRIN-TOP	VON-MISES-TOP	MAX-SHEAR-TOP	MAX-PRIN-BOT	VON-MISES-BOT	MAX-SHEAR-BOT
251669	1032	2.141053E+04	4.047449E+04	2.334135E+04	2.193428E+04	4.278199E+04	2.465037E+04
251664	1032	1.945020E+04	3.784049E+04	2.180488E+04	1.877685E+04	3.498808E+04	2.018403E+04
212447	1032	2.955018E+03	1.563633E+04	8.451500E+03	7.041594E+03	2.556953E+04	1.417624E+04
212321	1032	2.589815E+03	1.488006E+04	8.002482E+03	7.156775E+03	2.403147E+04	1.339843E+04
212433	1032	3.702215E+03	1.527784E+04	8.394367E+03	7.014845E+03	2.339389E+04	1.304937E+04
200547	1032	3.602765E+02	1.447046E+04	7.323616E+03	3.161033E+03	2.200245E+04	1.170600E+04
212431	1032	3.993201E+01	1.372726E+04	6.873593E+03	5.787042E+03	2.073804E+04	1.150843E+04
212323	1032	3.356689E+03	1.388450E+04	7.627559E+03	6.221865E+03	2.073797E+04	1.156833E+04
212402	1032	2.274628E+03	1.936780E+04	1.020234E+04	9.159088E+03	2.056319E+04	1.177566E+04
200545	1032	2.818664E+03	1.252703E+04	6.848115E+03	9.427290E+02	2.032587E+04	1.039041E+04
212325	1032	4.215073E+02	1.193746E+04	6.071316E+03	5.086059E+03	1.991399E+04	1.098190E+04
200511	1032	3.752124E+02	1.280524E+04	6.494360E+03	2.694233E+03	1.979655E+04	1.050284E+04
212366	1032	1.369417E+03	1.920535E+04	9.926701E+03	1.069948E+04	1.969218E+04	1.136283E+04
212432	1032	3.206388E+03	1.380807E+04	7.564588E+03	3.235308E+03	1.946718E+04	1.044107E+04
212352	1032	4.122527E+03	1.690804E+04	9.294034E+03	2.758409E+03	1.871901E+04	9.972579E+03

```
### $
### $
### SELECT TRIA3-STRESSES
### SORT VAR = MAXABS(MAX-SHEAR-TOP);OPT=12
### PRINT 7 9 10 11 13 14;
```

HEADING = 'MAX TOP SHEAR STRESSES BASED ALL CASES';
NCASES =15

ID	SUBCASE	MAX-PRIN-TOP	VON-MISES-TOP	MAX-SHEAR-TOP	MAX-PRIN-BOT	VON-MISES-BOT	MAX-SHEAR-BOT
251669	1032	2.141053E+04	4.047449E+04	2.334135E+04	2.193426E+04	4.278199E+04	2.465037E+04
251664	1032	1.945020E+04	3.784049E+04	2.180488E+04	1.877685E+04	3.498808E+04	2.018403E+04
212389	1032	2.567964E+03	2.862968E+04	1.491358E+04	-2.728484E-12	1.479996E+04	7.621215E+03
212391	1032	2.523405E+03	2.847482E+04	1.482627E+04	-1.818989E-12	1.462036E+04	7.578914E+03
212388	1032	1.233902E+03	2.792896E+04	1.426273E+04	5.213427E+02	1.527350E+04	7.763749E+03
212418	1032	3.258926E+03	2.690996E+04	1.419551E+04	7.716002E+02	1.605596E+04	8.213923E+03
212419	1032	1.098952E+03	2.771148E+04	1.412231E+04	3.588252E+02	1.518037E+04	7.678300E+03
241244	1032	2.284763E+03	2.614180E+04	1.360459E+04	-7.275958E-12	1.294897E+04	7.397194E+03
212416	1032	2.953508E+03	2.585842E+04	1.360418E+04	6.093615E-11	1.558735E+04	7.798781E+03
212392	1032	1.904005E+03	2.599890E+04	1.344928E+04	6.591660E+02	1.489297E+04	7.605807E+03
212390	1032	1.627801E+03	2.601223E+04	1.339395E+04	-1.818989E-12	1.304913E+04	7.134933E+03
212417	1032	2.548825E+03	2.452714E+04	1.285101E+04	0.000000E+00	1.501997E+04	7.705077E+03
241241	1032	3.143771E+03	2.426434E+04	1.284150E+04	-1.818989E-12	1.338266E+04	7.528344E+03
212361	1032	1.460951E+03	2.461931E+04	1.265863E+04	5.840205E+02	1.498331E+04	7.633392E+03
212415	1032	5.020788E+03	2.066854E+04	1.135819E+04	2.487680E+03	1.717929E+04	9.143753E+03

$
$
SELECT TRIA3-STRESSES
SORT VAR = MAXABS(MAX-SHEAR-BOT);OPT=12
PRINT 7 9 10 11 13 14;
HEADING = 'MAX BOT SHEAR STRESSES BASED ALL CASES';
NCASES =15

ID	SUBCASE	MAX-PRIN-TOP	VON-MISES-TOP	MAX-SHEAR-TOP	MAX-PRIN-BOT	VON-MISES-BOT	MAX-SHEAR-BOT
251669	1032	2.141053E+04	4.047449E+04	2.334135E+04	2.193426E+04	4.278199E+04	2.465037E+04
251664	1032	1.945020E+04	3.784049E+04	2.180488E+04	1.877685E+04	3.498808E+04	2.018403E+04
212447	1032	2.955018E+03	1.563633E+04	8.451500E+03	7.041594E+03	2.556953E+04	1.417624E+04
212321	1032	2.589815E+03	1.488006E+04	8.002482E+03	7.156775E+03	2.403147E+04	1.339843E+04
212433	1032	3.702215E+03	1.527784E+04	8.394367E+03	7.014845E+03	2.339389E+04	1.304937E+04
212402	1032	2.274628E+03	1.936780E+04	1.020234E+04	9.159088E+03	2.056319E+04	1.177566E+04
200547	1032	3.602765E+02	1.447046E+04	7.323616E+03	3.161033E+03	2.200245E+04	1.170600E+04
212323	1032	3.356689E+03	1.388450E+04	7.627559E+03	6.221865E+03	2.073797E+04	1.156833E+04
212431	1032	3.993201E+01	1.372726E+04	6.873593E+03	5.787042E+03	2.073804E+04	1.150843E+04
212366	1032	1.369417E+03	1.920535E+04	9.926701E+03	1.069948E+04	1.969218E+04	1.136283E+04
212325	1032	4.215073E+02	1.193746E+04	6.071316E+03	5.086059E+03	1.991399E+04	1.098190E+04
200511	1032	3.752124E+02	1.280524E+04	6.494360E+03	2.694233E+03	1.979655E+04	1.050284E+04

212432 1032 3.206388E+03 1.380807E+04 7.564588E+03 3.235308E+03 1.946718E+04 1.044107E+04

200545 1032 2.818664E+03 1.252703E+04 6.848115E+03 9.427290E+02 2.032587E+04 1.039041E+04

251549 1032 7.707940E+03 1.726216E+04 9.886619E+03 7.923595E+03 1.801489E+04 1.030930E+04

```
### $
### $
### SELECT TRIA3-STRESSES
### SORT VAR = MAXABS(MIN-PRIN-TOP);OPT=12
### PRINT 8 9 10 12 13 14;
### HEADING = 'MAX MIN-PRIN TOP STRESSES BASED ALL CASES';
### NCASES =15
```

ID SUBCASE MIN-PRIN-TOP VON-MISES-TOP MAX-SHEAR-TOP MIN-PRIN-BOT VON-MISES-BOT MAX-SHEAR-BOT

212388 1032 -2.729156E+04 2.792896E+04 1.426273E+04 -1.500616E+04 1.527350E+04 7.763749E+03

212389 1032 -2.725919E+04 2.862968E+04 1.491358E+04 -1.524243E+04 1.479996E+04 7.621215E+03

212419 1032 -2.714565E+04 2.771148E+04 1.412231E+04 -1.499778E+04 1.518037E+04 7.678300E+03

212391 1032 -2.712914E+04 2.847482E+04 1.482627E+04 -1.515783E+04 1.462036E+04 7.578914E+03

251669 1032 -2.527218E+04 4.047449E+04 2.334135E+04 -2.736648E+04 4.278199E+04 2.465037E+04

212390 1032 -2.516011E+04 2.601223E+04 1.339395E+04 -1.426987E+04 1.304913E+04 7.134933E+03

212418 1032 -2.513209E+04 2.690996E+04 1.419551E+04 -1.565625E+04 1.605596E+04 8.213923E+03

212392 1032 -2.499455E+04 2.599890E+04 1.344928E+04 -1.455245E+04 1.489297E+04 7.605807E+03

241244 1032 -2.492443E+04 2.614180E+04 1.360459E+04 -1.479439E+04 1.294897E+04 7.397194E+03

212416 1032 -2.425485E+04 2.585842E+04 1.360418E+04 -1.559756E+04 1.558735E+04 7.798781E+03

251664 1032 -2.415955E+04 3.784049E+04 2.180488E+04 -2.159121E+04 3.498808E+04 2.018403E+04

212361 1032 -2.385630E+04 2.461931E+04 1.265863E+04 -1.468276E+04 1.498331E+04 7.633392E+03

212417 1032 -2.315320E+04 2.452714E+04 1.285101E+04 -1.541015E+04 1.501997E+04 7.705077E+03

241241 1032 -2.253922E+04 2.426434E+04 1.284150E+04 -1.505669E+04 1.338266E+04 7.528344E+03

212378 1032 -2.038071E+04 2.129568E+04 1.105286E+04 -1.005889E+04 9.970435E+03 5.029446E+03

```
### $
### $
### SELECT TRIA3-STRESSES
### SORT VAR = MAXABS(MIN-PRIN-BOT);OPT=12
### PRINT 8 9 10 12 13 14;
### HEADING = 'MAX MIN-PRIN BOT STRESSES BASED ALL CASES';
### NCASES =15
```

ID SUBCASE MIN-PRIN-TOP VON-MISES-TOP MAX-SHEAR-TOP MIN-PRIN-BOT VON-MISES-BOT MAX-SHEAR-BOT

251669 1032 -2.527218E+04 4.047449E+04 2.334135E+04 -2.736648E+04 4.278199E+04 2.465037E+04

251664 1032 -2.415955E+04 3.784049E+04 2.180488E+04 -2.159121E+04 3.498808E+04 2.018403E+04

212447 1032 -1.394798E+04 1.563633E+04 8.451500E+03 -2.131089E+04 2.556953E+04 1.417624E+04

200547 1032 -1.428696E+04 1.447046E+04 7.323616E+03 -2.025096E+04 2.200245E+04 1.170600E+04

200545 1032 -1.097757E+04 1.252703E+04 6.848115E+03 -1.983810E+04 2.032587E+04 1.039041E+04

212321 1032 -1.341515E+04 1.488006E+04 8.002482E+03 -1.964008E+04 2.403147E+04 1.339843E+04

212433 1032 -1.308652E+04 1.527784E+04 8.394367E+03 -1.908390E+04 2.339389E+04 1.304937E+04

```
 200511    1032 -1.261351E+04  1.280524E+04  6.494360E+03 -1.831145E+04  1.979655E+04  1.050284E+04
 212432    1032 -1.192279E+04  1.380807E+04  7.564588E+03 -1.764684E+04  1.946718E+04  1.044107E+04
 241247    1032 -1.617414E+04  2.005379E+04  1.121905E+04 -1.760868E+04  1.793662E+04  9.123744E+03
 212431    1032 -1.370725E+04  1.372726E+04  6.873593E+03 -1.722982E+04  2.073804E+04  1.150843E+04
 200546    1032 -1.236483E+04  1.247498E+04  6.291142E+03 -1.720075E+04  1.719550E+04  8.600373E+03
 212352    1032 -1.446554E+04  1.690804E+04  9.294034E+03 -1.718675E+04  1.871901E+04  9.972579E+03
 251702    1032 -4.606285E+03  9.896682E+03  5.680117E+03 -1.714828E+04  1.485272E+04  8.574142E+03
 212323    1032 -1.189843E+04  1.388450E+04  7.627559E+03 -1.691479E+04  2.073797E+04  1.156833E+04

   ### $
   ### EXIT
*** NORMAL EXIT: EXIT
END OF JOB
```

$ punch files of load cases-2000 for sorting out
FILES '/hsm/swang/ams02/nonlin/flange-new/2000/6-02/R2016.pch'
SELECT QUAD4-STRESSES
SORT VAR = MAXABS(MAX-PRIN-TOP);OPT=12
PRINT 7 9 10 11 13 14;
HEADING = 'MAX TOP PRIN STRESSES BASED ALL CASES';
NCASES =15

ID	SUBCASE	MAX-PRIN-TOP	VON-MISES-TOP	MAX-SHEAR-TOP	MAX-PRIN-BOT	VON-MISES-BOT	MAX-SHEAR-BOT
218235	2016	2.763490E+04	2.741366E+04	1.381745E+04	2.691980E+04	2.637333E+04	1.345990E+04
218197	2016	2.751716E+04	2.728680E+04	1.375858E+04	2.668000E+04	2.615562E+04	1.334000E+04
217387	2016	2.711918E+04	2.684234E+04	1.355959E+04	2.581027E+04	2.532899E+04	1.290513E+04
218233	2016	2.701060E+04	2.725776E+04	1.374918E+04	2.655890E+04	2.642231E+04	1.327945E+04
202516	2016	2.696324E+04	2.579836E+04	1.348162E+04	-9.094947E-12	1.651018E+04	9.369169E+03
218199	2016	2.679120E+04	2.704908E+04	1.364989E+04	2.646407E+04	2.631144E+04	1.323203E+04
217429	2016	2.678819E+04	2.659586E+04	1.339410E+04	2.625660E+04	2.572668E+04	1.312830E+04
217445	2016	2.671295E+04	2.546363E+04	1.335647E+04	2.568608E+04	2.516511E+04	1.284304E+04
217385	2016	2.643703E+04	2.669620E+04	1.347401E+04	2.591701E+04	2.575964E+04	1.295850E+04
218231	2016	2.622841E+04	2.647615E+04	1.335856E+04	2.596809E+04	2.580439E+04	1.298404E+04
218201	2016	2.616520E+04	2.640646E+04	1.332064E+04	2.587674E+04	2.571910E+04	1.293837E+04
217371	2016	2.608896E+04	2.589541E+04	1.304448E+04	2.556025E+04	2.504095E+04	1.278012E+04
217447	2016	2.606273E+04	2.630582E+04	1.327117E+04	2.546977E+04	2.533373E+04	1.273489E+04
217431	2016	2.601835E+04	2.625608E+04	1.324376E+04	2.570694E+04	2.557309E+04	1.285347E+04
217383	2016	2.595524E+04	2.619859E+04	1.321768E+04	2.545587E+04	2.529773E+04	1.272793E+04

$
$
SELECT QUAD4-STRESSES
SORT VAR = MAXABS(MAX-PRIN-BOT);OPT=12
PRINT 7 9 10 11 13 14;
HEADING = 'MAX BOT PRIN STRESSES BASED ALL CASES';
NCASES =15

ID	SUBCASE	MAX-PRIN-TOP	VON-MISES-TOP	MAX-SHEAR-TOP	MAX-PRIN-BOT	VON-MISES-BOT	MAX-SHEAR-BOT
218235	2016	2.763490E+04	2.741366E+04	1.381745E+04	2.691980E+04	2.637333E+04	1.345990E+04
218197	2016	2.751716E+04	2.728680E+04	1.375858E+04	2.668000E+04	2.615562E+04	1.334000E+04
218233	2016	2.701060E+04	2.725776E+04	1.374918E+04	2.655890E+04	2.642231E+04	1.327945E+04
218199	2016	2.679120E+04	2.704908E+04	1.364989E+04	2.646407E+04	2.631144E+04	1.323203E+04
217429	2016	2.678819E+04	2.659586E+04	1.339410E+04	2.625660E+04	2.572668E+04	1.312830E+04
218231	2016	2.622841E+04	2.647615E+04	1.335856E+04	2.596809E+04	2.580439E+04	1.298404E+04
217385	2016	2.643703E+04	2.669620E+04	1.347401E+04	2.591701E+04	2.575964E+04	1.295850E+04
218201	2016	2.616520E+04	2.640646E+04	1.332064E+04	2.587674E+04	2.571910E+04	1.293837E+04
217387	2016	2.711918E+04	2.684234E+04	1.355959E+04	2.581027E+04	2.532899E+04	1.290513E+04

```
217431   2016 2.601835E+04 2.625608E+04 1.324376E+04 2.570694E+04 2.557309E+04 1.285347E+04

217445   2016 2.671295E+04 2.646363E+04 1.335647E+04 2.568608E+04 2.516511E+04 1.284304E+04

217371   2016 2.608896E+04 2.589541E+04 1.304448E+04 2.556025E+04 2.504095E+04 1.278012E+04

217447   2016 2.606273E+04 2.630582E+04 1.327117E+04 2.546977E+04 2.533373E+04 1.273489E+04

217383   2016 2.595524E+04 2.619859E+04 1.321768E+04 2.545587E+04 2.529773E+04 1.272793E+04

217433   2016 2.522633E+04 2.547198E+04 1.285536E+04 2.510885E+04 2.495245E+04 1.255443E+04

 ### $
 ### $
 ### SELECT QUAD4-STRESSES
 ### SORT VAR = MAXABS(VON-MISES-TOP);OPT=12
 ### PRINT 7 9 10 11 13 14;
 ### HEADING = 'MAX TOP YEILD STRESSES BASED ALL CASES';
 ### NCASES =15

 ID   SUBCASE  MAX-PRIN-TOP VON-MISES-TOP MAX-SHEAR-TOP  MAX-PRIN-BOT VON-MISES-BOT MAX-SHEAR-BOT

213536   2016 -1.091394E-11 2.748974E+04 1.424787E+04 7.275958E-12 2.668065E+04 1.378325E+04

218235   2016 2.763490E+04 2.741366E+04 1.381745E+04 2.691980E+04 2.637333E+04 1.345990E+04

218197   2016 2.751716E+04 2.728680E+04 1.375858E+04 2.668000E+04 2.615562E+04 1.334000E+04

218233   2016 2.701060E+04 2.725776E+04 1.374918E+04 2.655890E+04 2.642231E+04 1.327945E+04

213623   2016 -1.818989E-12 2.724396E+04 1.408814E+04 -1.818989E-12 2.742597E+04 1.419128E+04

213625   2016 -3.637979E-12 2.716700E+04 1.404863E+04 9.094947E-12 2.712295E+04 1.402321E+04

213621   2016 4.094272E+02 2.714617E+04 1.367429E+04 4.463752E+02 2.707208E+04 1.364625E+04

218199   2016 2.679120E+04 2.704908E+04 1.364989E+04 2.646407E+04 2.631144E+04 1.323203E+04

213627   2016 3.978477E+02 2.686201E+04 1.352936E+04 3.880148E+02 2.686425E+04 1.352808E+04

213538   2016 -1.637090E-11 2.684687E+04 1.387218E+04 -3.637979E-12 2.724167E+04 1.410419E+04

213540   2016 3.949935E+02 2.684357E+04 1.351944E+04 3.987875E+02 2.689844E+04 1.354781E+04

217387   2016 2.711918E+04 2.684234E+04 1.355959E+04 2.581027E+04 2.532899E+04 1.290513E+04

212385   2016 2.088583E+03 2.676200E+04 1.387255E+04 -2.728484E-12 1.380591E+04 7.097622E+03

213534   2016 4.434163E+02 2.669706E+04 1.345800E+04 4.425624E+02 2.663851E+04 1.342852E+04

217385   2016 2.643703E+04 2.669620E+04 1.347401E+04 2.591701E+04 2.575964E+04 1.295850E+04

 ### $
 ### $
 ### SELECT QUAD4-STRESSES
 ### SORT VAR = MAXABS(VON-MISES-BOT);OPT=12
 ### PRINT 7 9 10 11 13 14;
 ### HEADING = 'MAX BOT YEILD STRESSES BASED ALL CASES';
 ### NCASES =15

 ID   SUBCASE  MAX-PRIN-TOP VON-MISES-TOP MAX-SHEAR-TOP  MAX-PRIN-BOT VON-MISES-BOT MAX-SHEAR-BOT

213956   2016 1.818989E-12 2.375919E+04 1.241557E+04 -1.818989E-11 2.794068E+04 1.465445E+04

213623   2016 -1.818989E-12 2.724396E+04 1.408814E+04 -1.818989E-12 2.742597E+04 1.419128E+04

213538   2016 -1.637090E-11 2.684687E+04 1.387218E+04 -3.637979E-12 2.724167E+04 1.410419E+04

213625   2016 -3.637979E-12 2.716700E+04 1.404863E+04 9.094947E-12 2.712295E+04 1.402321E+04
```

213621 2016 4.094272E+02 2.714617E+04 1.367429E+04 4.463752E+02 2.707208E+04 1.364625E+04

213540 2016 3.949935E+02 2.684357E+04 1.351944E+04 3.987875E+02 2.689844E+04 1.354781E+04

212434 2016 4.066078E+03 1.042538E+04 5.922864E+03 7.127410E+03 2.687819E+04 1.486177E+04

213627 2016 3.978477E+02 2.686201E+04 1.352936E+04 3.880148E+02 2.686425E+04 1.352808E+04

213536 2016 -1.091394E-11 2.748974E+04 1.424787E+04 7.275958E-12 2.668065E+04 1.378325E+04

213534 2016 4.434163E+02 2.669706E+04 1.345800E+04 4.425624E+02 2.663851E+04 1.342852E+04

218233 2016 2.701060E+04 2.725776E+04 1.374918E+04 2.655890E+04 2.642231E+04 1.327945E+04

218235 2016 2.763490E+04 2.741366E+04 1.381745E+04 2.691980E+04 2.637333E+04 1.345990E+04

218199 2016 2.679120E+04 2.704908E+04 1.364989E+04 2.646407E+04 2.631144E+04 1.323203E+04

218197 2016 2.751716E+04 2.728680E+04 1.375858E+04 2.668000E+04 2.615562E+04 1.334000E+04

218231 2016 2.622841E+04 2.647615E+04 1.335856E+04 2.596809E+04 2.580439E+04 1.298404E+04

```
### $
### $
### SELECT QUAD4-STRESSES
### SORT VAR = MAXABS(MAX-SHEAR-TOP);OPT=12
### PRINT 7 9 10 11 13 14;
### HEADING = 'MAX TOP SHEAR STRESSES BASED ALL CASES';
### NCASES =15
```

ID SUBCASE MAX-PRIN-TOP VON-MISES-TOP MAX-SHEAR-TOP MAX-PRIN-BOT VON-MISES-BOT MAX-SHEAR-BOT

213536 2016 -1.091394E-11 2.748974E+04 1.424787E+04 7.275958E-12 2.668065E+04 1.378325E+04

213623 2016 -1.818989E-12 2.724396E+04 1.408814E+04 -1.818989E-12 2.742597E+04 1.419128E+04

213625 2016 -3.637979E-12 2.716700E+04 1.404863E+04 9.094947E-12 2.712295E+04 1.402321E+04

212385 2016 2.088583E+03 2.676200E+04 1.387255E+04 -2.728484E-12 1.380591E+04 7.097622E+03

213538 2016 -1.637090E-11 2.684687E+04 1.387218E+04 -3.637979E-12 2.724157E+04 1.410419E+04

212386 2016 2.211601E+03 2.665356E+04 1.384523E+04 0.000000E+00 1.385907E+04 7.089157E+03

218235 2016 2.763490E+04 2.741366E+04 1.381745E+04 2.691980E+04 2.637333E+04 1.345990E+04

218197 2016 2.751716E+04 2.728680E+04 1.375858E+04 2.668000E+04 2.615562E+04 1.334000E+04

218233 2016 2.701060E+04 2.725776E+04 1.374918E+04 2.655890E+04 2.642231E+04 1.327945E+04

213621 2016 4.094272E+02 2.714617E+04 1.367429E+04 4.463752E+02 2.707208E+04 1.364625E+04

218199 2016 2.679120E+04 2.704908E+04 1.364989E+04 2.646407E+04 2.631144E+04 1.323203E+04

217387 2016 2.711918E+04 2.684234E+04 1.355959E+04 2.581027E+04 2.532899E+04 1.290513E+04

212384 2016 1.477014E+03 2.639181E+04 1.354965E+04 4.547474E-12 1.395640E+04 7.045094E+03

213627 2016 3.978477E+02 2.686201E+04 1.352936E+04 3.880148E+02 2.686425E+04 1.352808E+04

213540 2016 3.949935E+02 2.684357E+04 1.351944E+04 3.987875E+02 2.689844E+04 1.354781E+04

```
### $
### $
### SELECT QUAD4-STRESSES
### SORT VAR = MAXABS(MAX-SHEAR-BOT);OPT=12
### PRINT 7 9 10 11 13 14;
### HEADING = 'MAX BOT SHEAR STRESSES BASED ALL CASES';
### NCASES =15
```

ID	SUBCASE	MAX-PRIN-TOP	VON-MISES-TOP	MAX-SHEAR-TOP	MAX-PRIN-BOT	VON-MISES-BOT	MAX-SHEAR-BOT
212434	2016	4.066078E+03	1.042538E+04	5.922864E+03	7.127410E+04	2.687819E+04	1.486177E+04
213956	2016	1.818989E-12	2.375919E+04	1.241557E+04	-1.818989E-11	2.794068E+04	1.465445E+04
212436	2016	1.869888E+03	1.529783E+04	8.073411E+03	9.128501E+03	2.547283E+04	1.438964E+04
213623	2016	-1.818989E-12	2.724396E+04	1.408814E+04	-1.818989E-12	2.742597E+04	1.419128E+04
213538	2016	-1.637090E-11	2.684687E+04	1.387218E+04	-3.637979E-12	2.724167E+04	1.410419E+04
213625	2016	-3.637979E-12	2.716700E+04	1.404863E+04	9.094947E-12	2.712295E+04	1.402321E+04
212319	2016	3.963014E+03	9.358308E+03	5.343880E+03	6.222329E+03	2.542634E+04	1.397996E+04
212318	2016	1.643364E+03	1.436740E+04	7.559210E+03	9.251372E+03	2.459985E+04	1.394213E+04
213536	2016	-1.091394E-11	2.748974E+04	1.424787E+04	7.275958E-12	2.668065E+04	1.378325E+04
213621	2016	4.094272E+02	2.714617E+04	1.367429E+04	4.463752E+02	2.707208E+04	1.364625E+04
213540	2016	3.949935E+02	2.684357E+04	1.351944E+04	3.987875E+02	2.689844E+04	1.354781E+04
213627	2016	3.978477E+02	2.686201E+04	1.352936E+04	3.880148E+02	2.686425E+04	1.352808E+04
218235	2016	2.763490E+04	2.741366E+04	1.381745E+04	2.691980E+04	2.637333E+04	1.345990E+04
213534	2016	4.434163E+02	2.669706E+04	1.345800E+04	4.425624E+02	2.663851E+04	1.342852E+04
218197	2016	2.751716E+04	2.728680E+04	1.375858E+04	2.668000E+04	2.615562E+04	1.334000E+04

```
### $
### $
### SELECT QUAD4-STRESSES
### SORT VAR = MAXABS(MIN-PRIN-TOP);OPT=12
### PRINT 8 9 10 12 13 14;
### HEADING = 'MAX MIN-PRIN TOP STRESSES BASED ALL CASES';
### NCASES =15
```

ID	SUBCASE	MIN-PRIN-TOP	VON-MISES-TOP	MAX-SHEAR-TOP	MIN-PRIN-BOT	VON-MISES-BOT	MAX-SHEAR-BOT
213536	2016	-2.849573E+04	2.748974E+04	1.424787E+04	-2.756650E+04	2.668065E+04	1.378325E+04
213623	2016	-2.817628E+04	2.724396E+04	1.408814E+04	-2.838257E+04	2.742597E+04	1.419128E+04
213625	2016	-2.809726E+04	2.716700E+04	1.404863E+04	-2.804641E+04	2.712295E+04	1.402321E+04
213538	2016	-2.774436E+04	2.684687E+04	1.387218E+04	-2.820837E+04	2.724167E+04	1.410419E+04
213621	2016	-2.693914E+04	2.714617E+04	1.367429E+04	-2.684613E+04	2.707208E+04	1.364625E+04
213627	2016	-2.666088E+04	2.686201E+04	1.352936E+04	-2.666814E+04	2.686425E+04	1.352808E+04
213540	2016	-2.664389E+04	2.684357E+04	1.351944E+04	-2.669683E+04	2.689844E+04	1.354781E+04
213534	2016	-2.647259E+04	2.669706E+04	1.345800E+04	-2.641447E+04	2.663851E+04	1.342852E+04
213633	2016	-2.615269E+04	2.532112E+04	1.307634E+04	-2.605798E+04	2.523950E+04	1.302899E+04
213546	2016	-2.606509E+04	2.526968E+04	1.303255E+04	-2.662803E+04	2.575356E+04	1.331401E+04

212385 2016 -2.565652E+04 2.676200E+04 1.387255E+04 -1.419524E+04 1.380591E+04 7.097622E+03

213619 2016 -2.564288E+04 2.565694E+04 1.283548E+04 -2.546117E+04 2.551571E+04 1.278495E+04

212384 2016 -2.562229E+04 2.639181E+04 1.354965E+04 -1.409019E+04 1.395640E+04 7.045094E+03

213542 2016 -2.553967E+04 2.565686E+04 1.288623E+04 -2.539764E+04 2.551985E+04 1.282017E+04

213347 2016 -2.553050E+04 2.425006E+04 1.276525E+04 -2.148356E+04 2.044870E+04 1.074178E+04

$
$
SELECT QUAD4-STRESSES
SORT VAR = MAXABS(MIN-PRIN-BOT);OPT=12
PRINT 8 9 10 12 13 14;
HEADING = 'MAX MIN-PRIN BOT STRESSES BASED ALL CASES';
NCASES =15

ID SUBCASE MIN-PRIN-TOP VON-MISES-TOP MAX-SHEAR-TOP MIN-PRIN-BOT VON-MISES-BOT MAX-SHEAR-BOT

213956 2016 -2.483115E+04 2.375919E+04 1.241557E+04 -2.930889E+04 2.794068E+04 1.465445E+04

213623 2016 -2.817628E+04 2.724396E+04 1.408814E+04 -2.838257E+04 2.742597E+04 1.419128E+04

213538 2016 -2.774436E+04 2.684687E+04 1.387218E+04 -2.820837E+04 2.724167E+04 1.410419E+04

213625 2016 -2.809726E+04 2.716700E+04 1.404863E+04 -2.804641E+04 2.712295E+04 1.402321E+04

213536 2016 -2.849573E+04 2.748974E+04 1.424787E+04 -2.756650E+04 2.668065E+04 1.378325E+04

213621 2016 -2.693914E+04 2.714617E+04 1.367429E+04 -2.684613E+04 2.707208E+04 1.364625E+04

213540 2016 -2.664389E+04 2.684357E+04 1.351944E+04 -2.669683E+04 2.689844E+04 1.354781E+04

213627 2016 -2.666088E+04 2.686201E+04 1.352936E+04 -2.666814E+04 2.686425E+04 1.352808E+04

213546 2016 -2.606509E+04 2.526968E+04 1.303255E+04 -2.662803E+04 2.575356E+04 1.331401E+04

213534 2016 -2.647259E+04 2.669706E+04 1.345800E+04 -2.641447E+04 2.663851E+04 1.342852E+04

214043 2016 -2.492817E+04 2.378175E+04 1.246408E+04 -2.632270E+04 2.511450E+04 1.316135E+04

213869 2016 -1.991619E+04 1.929931E+04 9.958096E+03 -2.630699E+04 2.519936E+04 1.315350E+04

213633 2016 -2.615269E+04 2.532112E+04 1.307634E+04 -2.605798E+04 2.523950E+04 1.302899E+04

213619 2016 -2.564288E+04 2.565694E+04 1.283548E+04 -2.546117E+04 2.551571E+04 1.278495E+04

213542 2016 -2.553967E+04 2.565686E+04 1.288623E+04 -2.539764E+04 2.551985E+04 1.282017E+04

$
$
$
SELECT TRIA3-STRESSES
SORT VAR = MAXABS(MAX-PRIN-TOP);OPT=12
PRINT 7 9 10 11 13 14;
HEADING = 'MAX TOP PRIN STRESSES BASED ALL CASES';
NCASES =15

ID SUBCASE MAX-PRIN-TOP VON-MISES-TOP MAX-SHEAR-TOP MAX-PRIN-BOT VON-MISES-BOT MAX-SHEAR-BOT

251669 2016 2.127274E+04 4.023993E+04 2.320572E+04 2.178766E+04 4.253108E+04 2.450516E+04

251664 2016 1.933888E+04 3.759225E+04 2.166240E+04 1.868584E+04 3.485512E+04 2.010688E+04

251752 2016 1.468255E+04 1.622190E+04 8.707177E+03 1.081132E+04 1.006214E+04 5.405661E+03

251751 2016 1.281685E+04 1.438099E+04 7.776119E+03 9.514256E+03 8.297155E+03 4.757128E+03

212445 2016 1.216468E+04 1.137717E+04 6.082339E+03 6.837048E+01 1.273593E+04 6.384990E+03

212335	2016	1.076523E+04	9.899425E+03	5.382613E+03	-1.000444E-11	1.254814E+04	6.360870E+03
251662	2016	1.010443E+04	1.095697E+04	5.823098E+03	9.383253E+03	1.084016E+04	5.933115E+03
251740	2016	9.673267E+03	1.328608E+04	7.574400E+03	8.352872E+03	7.576576E+03	4.176436E+03
212444	2016	9.617621E+03	8.863419E+03	4.808811E+03	-5.456968E-12	1.294901E+04	6.833763E+03
251738	2016	9.142590E+03	1.906877E+04	1.095928E+04	1.290620E+04	1.120644E+04	6.453101E+03
251657	2016	9.142393E+03	9.655716E+03	5.048990E+03	7.989427E+03	9.756855E+03	5.436943E+03
251713	2016	8.723035E+03	8.764001E+03	4.402201E+03	-9.094947E-13	8.054327E+03	4.636611E+03
212336	2016	8.620047E+03	7.954742E+03	4.310024E+03	9.094947E-13	1.267284E+04	6.717416E+03
251617	2016	8.584385E+03	8.794024E+03	4.494825E+03	6.564234E+03	7.947365E+03	4.417916E+03
251667	2016	8.319388E+03	9.744900E+03	5.360621E+03	9.650189E+03	1.079186E+04	5.826474E+03

```
### $
### $
### SELECT TRIA3-STRESSES
### SORT VAR = MAXABS(MAX-PRIN-BOT);OPT=12
### PRINT 7 9 10 11 13 14;
### HEADING = 'MAX BOT PRIN STRESSES BASED ALL CASES';
### NCASES =15
```

ID	SUBCASE	MAX-PRIN-TOP	VON-MISES-TOP	MAX-SHEAR-TOP	MAX-PRIN-BOT	VON-MISES-BOT	MAX-SHEAR-BOT
251669	2016	2.127274E+04	4.023993E+04	2.320572E+04	2.178766E+04	4.253108E+04	2.450516E+04
251664	2016	1.933888E+04	3.759225E+04	2.166240E+04	1.868584E+04	3.485512E+04	2.010688E+04
251741	2016	0.000000E+00	1.024401E+04	5.527239E+03	1.559309E+04	1.366983E+04	7.796545E+03
251738	2016	9.142590E+03	1.906877E+04	1.095928E+04	1.290620E+04	1.120644E+04	6.453101E+03
251739	2016	6.460496E+03	1.482646E+04	8.480259E+03	1.153658E+04	9.997441E+03	5.768289E+03
251672	2016	7.623614E+03	9.749504E+03	5.492797E+03	1.086573E+04	1.088553E+04	5.452608E+03
251752	2016	1.468255E+04	1.622190E+04	8.707177E+03	1.081132E+04	1.006214E+04	5.405661E+03
212366	2016	1.349172E+03	1.930649E+04	9.972845E+03	1.080360E+04	1.990228E+04	1.148387E+04
251743	2016	-9.094947E-13	7.747155E+03	4.333853E+03	1.030580E+04	9.659739E+03	5.152902E+03
251667	2016	8.319388E+03	9.744900E+03	5.360621E+03	9.650189E+03	1.079186E+04	5.826474E+03
251751	2016	1.281685E+04	1.438099E+04	7.776119E+03	9.514256E+03	8.297155E+03	4.757128E+03
251662	2016	1.010443E+04	1.095697E+04	5.823098E+03	9.383253E+03	1.084016E+04	5.933115E+03
212402	2016	2.197617E+03	1.906797E+04	1.003578E+04	8.722268E+03	1.986021E+04	1.136438E+04
251740	2016	9.673267E+03	1.328608E+04	7.574400E+03	8.352872E+03	7.576576E+03	4.176436E+03
251657	2016	9.142393E+03	9.655716E+03	5.048990E+03	7.989427E+03	9.756855E+03	5.436943E+03

```
### $
### $
### SELECT TRIA3-STRESSES
### SORT VAR = MAXABS(VON-MISES-TOP);OPT=12
### PRINT 7 9 10 11 13 14;
### HEADING = 'MAX TOP YEILD STRESSES BASED ALL CASES';
### NCASES =15
```

ID	SUBCASE	MAX-PRIN-TOP	VON-MISES-TOP	MAX-SHEAR-TOP	MAX-PRIN-BOT	VON-MISES-BOT	MAX-SHEAR-BOT
251669	2016	2.127274E+04	4.023993E+04	2.320572E+04	2.178766E+04	4.253108E+04	2.450516E+04
251664	2016	1.933888E+04	3.759225E+04	2.166240E+04	1.868584E+04	3.485512E+04	2.010688E+04
212389	2016	2.559405E+03	2.846609E+04	1.482968E+04	-5.456968E-12	1.471543E+04	7.583783E+03
212391	2016	2.535304E+03	2.834397E+04	1.476323E+04	-9.094947E-13	1.454856E+04	7.545721E+03
212388	2016	1.216473E+03	2.759252E+04	1.409032E+04	4.839036E+02	1.508403E+04	7.660079E+03
212419	2016	1.061057E+03	2.734753E+04	1.393131E+04	3.288618E+02	1.498918E+04	7.575454E+03
212418	2016	3.190143E+03	2.651201E+04	1.398137E+04	6.476983E+02	1.565839E+04	7.986094E+03
212392	2016	1.931405E+03	2.603263E+04	1.347227E+04	6.107936E+02	1.489020E+04	7.593097E+03
212390	2016	1.634799E+03	2.588491E+04	1.333178E+04	-2.728484E-12	1.298685E+04	7.103379E+03
241244	2016	2.266599E+03	2.585072E+04	1.345469E+04	-1.818989E-12	1.279225E+04	7.310613E+03
212416	2016	2.882768E+03	2.547465E+04	1.339670E+04	6.366463E-12	1.522683E+04	7.639554E+03
212361	2016	1.511041E+03	2.467825E+04	1.269953E+04	5.378289E+02	1.498669E+04	7.624182E+03
241241	2016	3.166857E+03	2.428477E+04	1.285642E+04	-7.275958E-12	1.338388E+04	7.535991E+03
212417	2016	2.495642E+03	2.418802E+04	1.266954E+04	-9.094947E-13	1.464428E+04	7.536507E+03
212378	2016	1.720178E+03	2.121344E+04	1.101058E+04	-2.273737E-12	9.922032E+03	5.007597E+03

```
### $
### $
### SELECT TRIA3-STRESSES
### SORT VAR = MAXABS(VON-MISES-BOT);OPT=12
### PRINT 7 9 10 11 13 14;
### HEADING = 'MAX BOT YEILD STRESSES BASED ALL CASES';
### NCASES =15
```

ID	SUBCASE	MAX-PRIN-TOP	VON-MISES-TOP	MAX-SHEAR-TOP	MAX-PRIN-BOT	VON-MISES-BOT	MAX-SHEAR-BOT
251669	2016	2.127274E+04	4.023993E+04	2.320572E+04	2.178766E+04	4.253108E+04	2.450516E+04
251664	2016	1.933888E+04	3.759225E+04	2.166240E+04	1.868584E+04	3.485512E+04	2.010688E+04
212447	2016	2.726067E+03	1.546995E+04	8.325888E+03	6.856650E+03	2.467828E+04	1.369078E+04
212321	2016	2.663712E+03	1.496927E+04	8.061157E+03	7.132461E+03	2.429146E+04	1.352962E+04
212433	2016	3.391271E+03	1.498059E+04	8.192755E+03	7.358239E+03	2.320802E+04	1.299756E+04
200547	2016	2.410437E+02	1.434786E+04	7.233430E+03	3.286707E+03	2.167853E+04	1.156710E+04
212323	2016	3.314623E+03	1.401813E+04	7.689191E+03	6.141189E+03	2.083111E+04	1.160567E+04
212431	2016	3.637979E-12	1.350451E+04	6.852760E+03	5.292591E+03	2.034041E+04	1.137155E+04
212325	2016	5.986514E+02	1.208386E+04	6.186032E+03	4.878712E+03	2.026485E+04	1.112943E+04
200545	2016	2.841210E+03	1.239660E+04	6.785276E+03	8.159759E+02	2.009147E+04	1.024351E+04

200511 2016 4.087282E+02 1.297239E+04 6.585961E+03 2.628860E+03 1.994635E+04 1.056521E+04

212366 2016 1.349172E+03 1.930649E+04 9.972845E+03 1.080360E+04 1.990228E+04 1.148387E+04

212402 2016 2.197617E+03 1.906797E+04 1.003578E+04 8.722268E+03 1.986021E+04 1.136438E+04

212432 2016 2.930296E+03 1.358326E+04 7.404626E+03 3.433950E+03 1.905488E+04 1.026918E+04

212352 2016 4.121837E+03 1.694400E+04 9.312322E+03 2.775485E+03 1.873051E+04 9.981695E+03

```
 ### $
 ### $
 ### SELECT TRIA3-STRESSES
 ### SORT VAR = MAXABS(MAX-SHEAR-TOP);OPT=12
 ### PRINT 7 9 10 11 13 14;
 ### HEADING = 'MAX TOP SHEAR STRESSES BASED ALL CASES';
 ### NCASES =15
```

ID SUBCASE MAX-PRIN-TOP VON-MISES-TOP MAX-SHEAR-TOP MAX-PRIN-BOT VON-MISES-BOT MAX-SHEAR-BOT

251669 2016 2.127274E+04 4.023993E+04 2.320572E+04 2.178766E+04 4.253108E+04 2.450516E+04

251664 2016 1.933888E+04 3.759225E+04 2.166240E+04 1.868584E+04 3.485512E+04 2.010688E+04

212389 2016 2.559405E+03 2.845609E+04 1.482968E+04 -5.456968E-12 1.471543E+04 7.583783E+03

212391 2016 2.535304E+03 2.834397E+04 1.476323E+04 -9.094947E-13 1.454856E+04 7.545721E+03

212388 2016 1.216473E+03 2.759252E+04 1.409032E+04 4.839036E+02 1.508403E+04 7.660079E+03

212418 2016 3.190143E+03 2.651201E+04 1.398137E+04 5.476983E+02 1.565839E+04 7.986094E+03

212419 2016 1.061057E+03 2.734753E+04 1.393131E+04 3.288618E+02 1.498918E+04 7.575454E+03

212392 2016 1.931405E+03 2.603253E+04 1.347227E+04 6.107936E+02 1.489020E+04 7.593097E+03

241244 2016 2.266599E+03 2.585072E+04 1.345469E+04 -1.818989E-12 1.279225E+04 7.310613E+03

212416 2016 2.882768E+03 2.547465E+04 1.339670E+04 6.366463E-12 1.522683E+04 7.639554E+03

212390 2016 1.634799E+03 2.588491E+04 1.333178E+04 -2.728484E-12 1.298685E+04 7.103379E+03

241241 2016 3.166867E+03 2.428477E+04 1.285642E+04 -7.275958E-12 1.338388E+04 7.535991E+03

212361 2016 1.511041E+03 2.467825E+04 1.269953E+04 5.378289E+02 1.498669E+04 7.624182E+03

212417 2016 2.495642E+03 2.418802E+04 1.266954E+04 -9.094947E-13 1.464428E+04 7.536507E+03

212362 2016 3.764315E+03 2.098791E+04 1.130767E+04 1.523706E+03 1.591698E+04 8.312022E+03

```
 ### $
 ### $
 ### SELECT TRIA3-STRESSES
 ### SORT VAR = MAXABS(MAX-SHEAR-BOT);OPT=12
 ### PRINT 7 9 10 11 13 14;
 ### HEADING = 'MAX BOT SHEAR STRESSES BASED ALL CASES';
 ### NCASES =15
```

ID SUBCASE MAX-PRIN-TOP VON-MISES-TOP MAX-SHEAR-TOP MAX-PRIN-BOT VON-MISES-BOT MAX-SHEAR-BOT

251669 2016 2.127274E+04 4.023993E+04 2.320572E+04 2.178766E+04 4.253108E+04 2.450516E+04

251664 2016 1.933888E+04 3.759225E+04 2.166240E+04 1.868584E+04 3.485512E+04 2.010688E+04

212447 2016 2.726067E+03 1.546995E+04 8.325888E+03 6.856650E+03 2.467828E+04 1.369078E+04

212321 2016 2.663712E+03 1.496927E+04 8.061157E+03 7.132461E+03 2.429146E+04 1.352962E+04

212433 2016 3.391271E+03 1.498059E+04 8.192755E+03 7.358239E+03 2.320802E+04 1.299756E+04

212323 2016 3.314623E+03 1.401813E+04 7.689191E+03 6.141189E+03 2.083111E+04 1.160587E+04

200547 2016 2.410437E+02 1.434786E+04 7.233430E+03 3.286707E+03 2.167853E+04 1.156710E+04

212366 2016 1.349172E+03 1.930649E+04 9.972845E+03 1.080360E+04 1.990228E+04 1.148387E+04

212431 2016 3.637979E-12 1.350451E+04 6.852760E+03 6.292591E+03 2.034041E+04 1.137155E+04

212402 2016 2.197617E+03 1.906797E+04 1.003578E+04 8.722268E+03 1.986021E+04 1.136438E+04

212325 2016 5.986514E+02 1.208386E+04 6.186032E+03 4.878712E+03 2.026485E+04 1.112943E+04

200511 2016 4.087282E+02 1.297239E+04 6.585961E+03 2.628860E+03 1.994535E+04 1.056521E+04

212432 2016 2.930296E+03 1.358326E+04 7.404626E+03 3.433950E+03 1.905488E+04 1.026918E+04

200545 2016 2.841210E+03 1.239660E+04 6.785276E+03 8.159759E+02 2.009147E+04 1.024351E+04

212352 2016 4.121837E+03 1.694400E+04 9.312322E+03 2.775485E+03 1.873051E+04 9.981695E+03

```
### $
### $
### SELECT TRIA3-STRESSES
### SORT VAR = MAXABS(MIN-PRIN-TOP);OPT=12
### PRINT 8 9 10 12 13 14;
### HEADING = 'MAX MIN-PRIN TOP STRESSES BASED ALL CASES';
### NCASES =15
```

ID SUBCASE MIN-PRIN-TOP VON-MISES-TOP MAX-SHEAR-TOP MIN-PRIN-BOT VON-MISES-BOT MAX-SHEAR-BOT

212389 2016 -2.709996E+04 2.846609E+04 1.482988E+04 -1.516757E+04 1.471543E+04 7.583783E+03

212391 2016 -2.699115E+04 2.834397E+04 1.476323E+04 -1.509144E+04 1.464856E+04 7.545721E+03

212388 2016 -2.696416E+04 2.759252E+04 1.409032E+04 -1.483625E+04 1.508403E+04 7.660079E+03

212419 2016 -2.680156E+04 2.734753E+04 1.393131E+04 -1.482205E+04 1.498918E+04 7.575454E+03

251669 2016 -2.513870E+04 4.023993E+04 2.320572E+04 -2.722266E+04 4.253108E+04 2.450516E+04

212390 2016 -2.502876E+04 2.588491E+04 1.333178E+04 -1.420676E+04 1.298685E+04 7.103379E+03

212392 2016 -2.501314E+04 2.603263E+04 1.347227E+04 -1.457540E+04 1.489020E+04 7.593097E+03

212418 2016 -2.477259E+04 2.651201E+04 1.398137E+04 -1.532449E+04 1.565839E+04 7.986094E+03

241244 2016 -2.464279E+04 2.585072E+04 1.345469E+04 -1.462123E+04 1.279225E+04 7.310613E+03

251664 2016 -2.398592E+04 3.759225E+04 2.166240E+04 -2.152792E+04 3.485512E+04 2.010688E+04

212416 2016 -2.391063E+04 2.547465E+04 1.339670E+04 -1.527911E+04 1.522683E+04 7.639554E+03

212361 2016 -2.388801E+04 2.467825E+04 1.269953E+04 -1.471054E+04 1.498669E+04 7.624182E+03

212417 2016 -2.284345E+04 2.418802E+04 1.266954E+04 -1.507301E+04 1.464428E+04 7.536507E+03

241241 2016 -2.254597E+04 2.428477E+04 1.285642E+04 -1.507198E+04 1.338388E+04 7.535991E+03

212378 2016 -2.030098E+04 2.121344E+04 1.101058E+04 -1.001519E+04 9.922032E+03 5.007597E+03

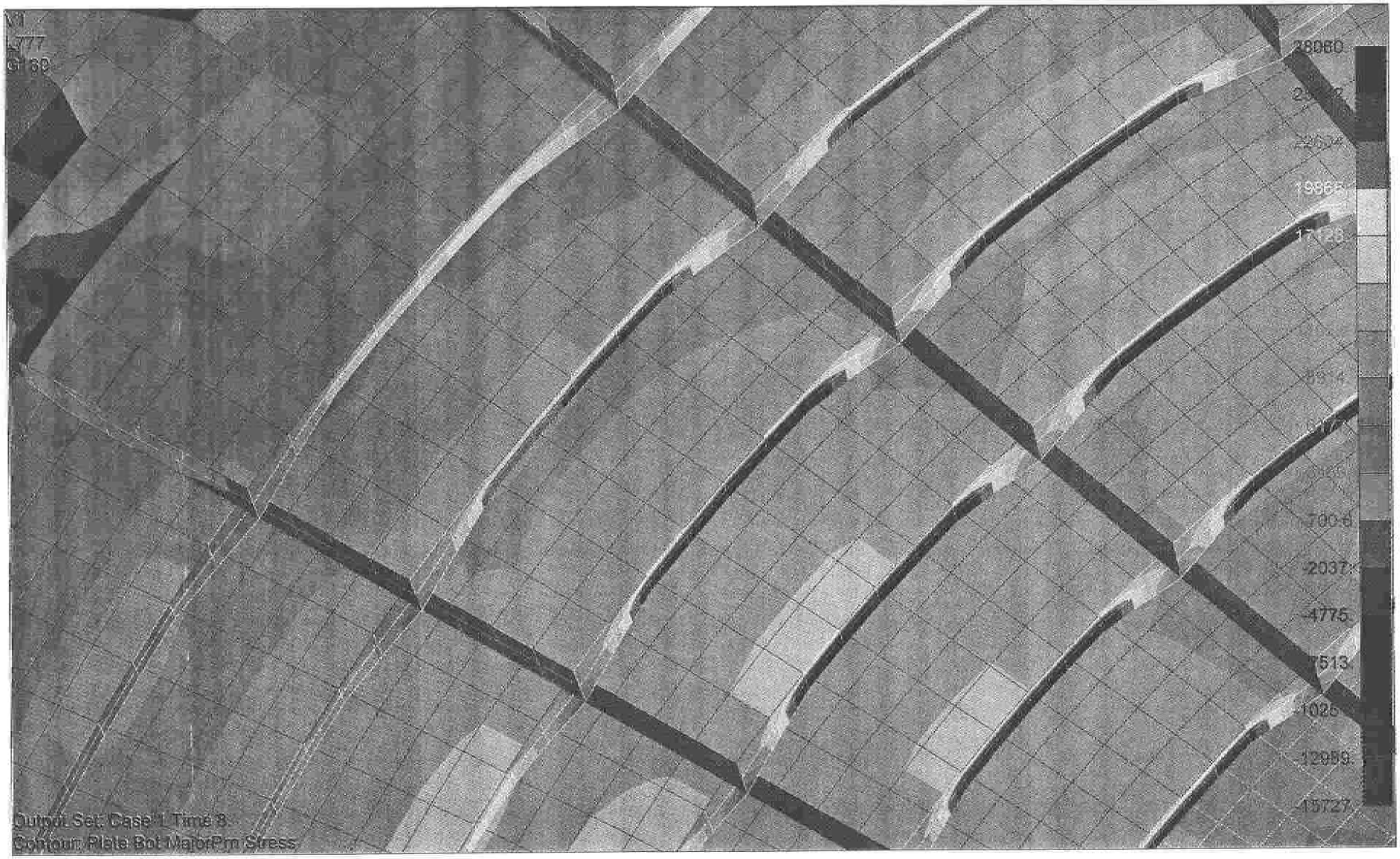
28060.
19866.
17128.
-700.6
-2037.
-4775.
-1025.
-12959.
-15727.
Output Set: Case 1 Time 8.
Contour: Plate Bot MajorPrn Stress

```
  ### $
  ### SELECT TRIA3-STRESSES
  ### SORT VAR = MAXABS(MIN-PRIN-BOT);OPT=12
  ### PRINT 8 9 10 12 13 14;
  ### HEADING = 'MAX MIN-PRIN BOT STRESSES BASED ALL CASES';
  ### NCASES =15

 ID   SUBCASE  MIN-PRIN-TOP VON-MISES-TOP MAX-SHEAR-TOP  MIN-PRIN-BOT VON-MISES-BOT MAX-SHEAR-BOT

 251669    2016 -2.513870E+04 4.023993E+04 2.320572E+04 -2.722266E+04 4.253108E+04 2.450516E+04

 251664    2016 -2.398592E+04 3.759225E+04 2.166240E+04 -2.152792E+04 3.485512E+04 2.010688E+04

 212447    2016 -1.392571E+04 1.546995E+04 8.325888E+03 -2.052490E+04 2.467828E+04 1.369078E+04

 212321    2016 -1.345860E+04 1.496927E+04 8.061157E+03 -1.992677E+04 2.429146E+04 1.352962E+04

 200547    2016 -1.422582E+04 1.434786E+04 7.233430E+03 -1.984750E+04 2.167853E+04 1.156710E+04

 200545    2016 -1.072934E+04 1.239660E+04 6.785276E+03 -1.967105E+04 2.009147E+04 1.024351E+04

 212433    2016 -1.299424E+04 1.498059E+04 8.192755E+03 -1.863689E+04 2.320802E+04 1.299756E+04

 200511    2016 -1.276319E+04 1.297239E+04 6.585961E+03 -1.850157E+04 1.994635E+04 1.056521E+04

 212298    2016 -3.764913E+03 8.515790E+03 4.874667E+03 -1.747364E+04 1.617455E+04 8.736818E+03

 212325    2016 -1.177341E+04 1.208386E+04 6.186032E+03 -1.738015E+04 2.026485E+04 1.112943E+04

 212352    2016 -1.450281E+04 1.694400E+04 9.312322E+03 -1.718790E+04 1.873051E+04 9.981695E+03

 212432    2016 -1.187896E+04 1.358326E+04 7.404626E+03 -1.710441E+04 1.905488E+04 1.026918E+04

 212323    2016 -1.206376E+04 1.401813E+04 7.689191E+03 -1.707015E+04 2.083111E+04 1.160567E+04

 241247    2016 -1.612507E+04 1.987311E+04 1.110105E+04 -1.706746E+04 1.733535E+04 8.795687E+03

 200510    2016 -1.003883E+04 1.120511E+04 6.044215E+03 -1.690359E+04 1.741086E+04 8.938634E+03

  ### $
  ### $
  ### $
  ### EXIT
*** NORMAL EXIT: EXIT
END OF JOB
```

Section 1.1.2 INNER CYLINDER

1.1.2 Stress Analysis for Vacuum Case Inner Cylinder

Introduction

The Inner Cylinder, shown in Figure 1.1.2A-1, is the central core of the Vacuum Case. The 43.898-inch outer diameter x 32.306-inch length cylinder is manufactured from 2219-T852 hand-forged aluminum. The thickness for the majority of the cylinder's length is 0.125 inch thick, which tapers to 0.25 inch for the final 0.961 inches at each end shown in Figure 1.1.2A-2. The 0.25 inch thickness at the ends to is needed to provide the proper cross sectional dimensions necessary to weld the Inner Cylinder to the top and bottom Conical Flanges of the Vacuum Case.

Analysis Method Used to Perform the Stress Analysis for the Inner Cylinder

MSC NASTRAN v2001 is used for the finite element analysis of the Inner Cylinder. The pre/post processing software used in building and analyzing the NASTRAN input and output is FEMAP version 8.2. The hi-fi Inner Cylinder model is built entirely out of CQUAD4 and CTRIA3 elements. The ends of the cylinder are connected to the top and bottom Conical Flanges with RBE2 elements. The entire Vacuum Case model, including the high fidelity Inner Cylinder, is integrated with the USS and magnet assembly model to make up the total AMS-02 payload as shown on figure 1.1.2A-3. The results from this model were used to determine the critical stresses for this component.

Stability analysis for the Inner Cylinder is located in section 1.1.2.3.

Inner Cylinder Finite Element Model Checks

Strain energy and rigid body modes were checked using the high fidelity Inner Cylinder Vacuum Case model combined with the remaining components to make up the full payload model. The overall payload model used in the analysis is version 6-02 found in the /hsm/bsommer/ams/bulk/6-02 directory. The Vacuum Case model used for the Inner Cylinder analysis is located in the /hsm/bsommer/ams/bulk/stressmods/innercylinder directory and titled vc-inner.dat. Figure 1.1.2A-4 shows the fine meshed Inner Cylinder model. The top and bottom of the Inner Cylinder contains rigid elements that attach the cylinder, with all six degrees of freedom (DOF), to the Conical Flanges. This simulates a full penetration welded joint. The weld interface is meshed with CQUAD4 elements rotated about the z-axis every 0.9375° and spaced 0.125" apart along the vertical z-axis. A second ring of rigid

elements, 0.75" below the weld and constrained only in the radial direction, simulates the last point of contact that the Inner Cylinder makes with the conical flanges.

Figure 1.1.2A-5 shows a schematic of the Inner Cylinder to Conical Flange weld interface. The rigid element attachment details are shown in Figure 1.1.2A-6.

The strain energy and rigid body modes checks for this model are found in the /hsm/bsommer/ams/checks/6-02 directory entitled checkamsinner.f06. The strain energy check limits that are acceptable are for values of 1.0E-5 for translations and 1.0E-3 for rotations. The results for the strain energy checks for the KGG, KNN, KFF matrices are found in Tables 1.1.2-1 through 1.1.2-3. Only the diagonal terms of the 6x6 matrix are listed. The results for the rigid body modes, listed in Table 1.1.2-4 shows six rigid body modes with a good separation between the last rigid body mode 6 and the first real mode mode 7. The total model Mass and CG location is shown in Table 1.1.2-5. The mass units are in slinches and the z coordinate is in the orbiter coordinate system.

RESULTS OF RIGID BODY CHECKS OF MATRIX KGG (G-SET) FOLLOW:
PRINT RESULTS IN ALL SIX DIRECTIONS AGAINST THE LIMIT OF 1.000000E-02

DIRECTION	STRAIN ENERGY	PASS/FAIL
1	6.542705E-07	PASS
2	1.937173E-07	PASS
3	2.267855E-07	PASS
4	2.125848E-04	PASS
5	6.424041E-04	PASS
6	1.145163E-03	PASS

Table 1.1.2-1: KGG for Inner Cylinder Model

RESULTS OF RIGID BODY CHECKS OF MATRIX KNN (N-SET) FOLLOW:
PRINT RESULTS IN ALL SIX DIRECTIONS AGAINST THE LIMIT OF 1.000000E-02

DIRECTION	STRAIN ENERGY	PASS/FAIL
1	7.519208E-07	PASS
2	5.946093E-07	PASS
3	2.948599E-07	PASS
4	8.092135E-04	PASS
5	3.437674E-04	PASS
6	1.161289E-03	PASS

Table 1.1.2-2: KNN for Inner Cylinder Model

RESULTS OF RIGID BODY CHECKS OF MATRIX KFF (F-SET) FOLLOW:
PRINT RESULTS IN ALL SIX DIRECTIONS AGAINST THE LIMIT OF 1.000000E-02

DIRECTION	STRAIN ENERGY	PASS/FAIL
1	7.519208E-07	PASS
2	5.946093E-07	PASS
3	2.948599E-07	PASS
4	8.092135E-04	PASS
5	3.437674E-04	PASS
6	1.161289E-03	PASS

Table 1.1.2-3: KFF for Inner Cylinder Model

MODE NO.	EXTRACTION ORDER	EIGENVALUE	RADIANS	CYCLES (Hz)	GENERALIZED MASS	GENERALIZED STIFFNESS
1	1	3.69E-08	1.92E-04	3.06E-05	1.00E+00	3.69E-08
2	2	7.36E-08	2.71E-04	4.32E-05	1.00E+00	7.36E-08
3	3	9.64E-08	3.11E-04	4.94E-05	1.00E+00	9.64E-08
4	4	1.11E-07	3.34E-04	5.31E-05	1.00E+00	1.11E-07
5	5	1.63E-07	4.04E-04	6.44E-05	1.00E+00	1.63E-07
6	**6**	**2.00E-07**	**4.48E-04**	**7.13E-05**	**1.00E+00**	**2.00E-07**
7	**7**	**6.60E+02**	**2.57E+01**	**4.09E+00**	**1.00E+00**	**6.60E+02**
8	8	9.86E+02	3.14E+01	5.00E+00	1.00E+00	9.86E+02

Table 1.1.2-4: Rigid Body Modes for Inner Cylinder Model

Dircetion Mass Axis System (m)	Stress Model Mass (slinches)	X-C.G. (in)	Y-C.G. (in)	Z-C.G. (in)
X	3.8847E+01	-1.51E-15	1.03E-02	-1.09E-02
Y	3.8847E+01	-1.64E-02	2.74E-16	-1.09E-02
Z	3.8847E+01	-1.64E-02	1.03E-02	-2.29E-17
Loads Model Mass =	**3.8851E+01**			

Table 1.1.2-5: Mass for Stress and Loads Model and CG For Inner Cylinder Model

- The cg coordinates for Table 1.1.2-5 should be close to zero since the cg is defined around node 999999

X (in)	Y (in)	Z (in)
-2.46E-01	2.58E+00	3.86E+02

Table 1.1.2-6: CG Location for AMS-02 in the Orbiter Z location

Loads and Constraints

The AMS-02 payload model is constrained at five trunnion locations. A total of 256 load cases for multiple launch/landing scenarios were run using NASTRAN. The critical load cases for the Inner Cylinder were determined by sorting the element stresses from the Inner Cylinder loads model. The high fidelity Inner Cylinder model is incorporated into the loads Vacuum Case model for use in determining the peak stresses. A total of seventeen load cases were chosen as the critical load cases, which included a contingency load case for an internal pressure of 0.8 atmospheres.

The list of the critical load cases with the corresponding load factors is shown in Table 1.1.2-7. Note that the R2### load cases are for landing with a full helium tank. R1### are launch load cases. The Load Factors used for this analysis are listed in Table 1, Page 14 of the AMS-02 Structural Verification Plan for STS and ISS(JSC-28792, Rev.B). The NASTRAN run streams for these load cases can be found in the /hsm/bsomer/ams/nonlin/innercylinder/2000 directory and labeled R20##.dat or /hsm/bsommer/ams/nonlin/innercylinder/1000 with the titles R10##.dat.

Load Case	Event	Nx (g)	Ny (g)	Nz (g)	Rx (rad/s^2)	Ry (rad/s^2)	Rz (rad/s^2)
1008	Launch	5.7	1.6	5.9	-10.0	-25.0	-18.0
1041	Launch	-5.7	1.6	-5.9	10.0	25.0	18.0
1045	Launch	-5.7	1.6	-5.9	-10.0	25.0	18.0
1062	Launch	-5.7	-1.6	-5.9	-10.0	25.0	-18.0
2007	Landing Full	4.5	2.0	6.5	-20.0	-35.0	15.0
2008	Landing Full	4.5	2.0	6.5	-20.0	-35.0	-15.0
2016	Landing Full	4.5	2.0	-6.5	-20.0	-35.0	-15.0
2019	Landing Full	4.5	-2.0	6.5	20.0	-35.0	15.0
2020	Landing Full	4.5	-2.0	6.5	20.0	-35.0	-15.0
2027	Landing Full	4.5	-2.0	-6.5	20.0	-35.0	15.0
2033	Landing Full	-4.5	2.0	6.5	20.0	35.0	15.0
2037	Landing Full	-4.5	2.0	6.5	-20.0	35.0	15.0
2041	Landing Full	-4.5	2.0	-6.5	20.0	35.0	15.0
2042	Landing Full	-4.5	2.0	-6.5	20.0	35.0	-15.0
2053	Landing Full	-4.5	-2.0	6.5	-20.0	35.0	15.0
2054	Landing Full	-4.5	-2.0	6.5	-20.0	35.0	-15.0
2061	Landing Full	-4.5	-2.0	-6.5	-20.0	35.0	15.0

Table 1.1.2-7: Critical Load Case Load Factors for Inner Cylinder Model

An interface loads comparison between the stress and loads model, shown on Tables 1.1.2- 8 and 1.1.2-9, show a close correlation between strap forces and reaction forces at the trunnion attachment points. Only one load case is shown in the tables to illustrate the similarities between the two models.

Strap ID	Strap Forces (lbs) Loads Model 6-02	Strap Forces (lbs) Stress Model 6-02	Abs Difference (lbs)
90001	21302.40	21311.43	9.030
90002	1743.94	1743.55	0.390
90003	5393.41	5374.05	19.361
90004	1494.33	1496.18	1.855
90005	11598.83	11600.79	1.960
90006	7667.55	7658.07	9.478
90007	4434.85	4421.56	13.286
90008	5654.60	5674.39	19.793
90009	1833.66	1831.71	1.948
90010	6762.57	6729.07	33.499
90011	1212.03	1213.04	1.016
90012	1504.58	1506.37	1.790
90013	1833.09	1835.46	2.371
90014	8681.50	8691.17	9.673
90015	1516.15	1518.04	1.892
90016	1829.39	1831.41	2.025

Table 1.1.2-8: Strap Force Loads Comparison of 6-02 Loads Model vs. Inner Cylinder Stress Model for Load Case 1045

Axis	Total Trunnion Load	Load Factor	Mass from Trunnion Reaction Load LC 1045	Mass Stress Model
X	85517.77	5.7	1.5003E+04	1.4998E+04
Y	-23983.46	1.6	-1.4990E+04	1.4998E+04
Z	88486.95	5.9	1.4998E+04	1.4998E+04

Table 1.1.2-9: Mass Calculated from Trunnion Forces vs. Mass of Stress Model

The discrepancies in strap loads are not seen as a problem for the Inner Cylinder model itself. The differences in the resultant mass at the trunnions and the actual model mass is due to a slight imbalance in the pressure load. The imbalance primarily occurs in the support rings and not at the Inner Cylinder itself. The bulk of the

imbalanced force is transferred directly to the USS-02 by way of the interface plates and diagonal strut attachments and not through the Inner Cylinder.

1.1.2.1 Stress Analysis Results for Inner Cylinder

The maximum stresses for the Inner Cylinder are shown below. NASPOST was used to sort the maximum stresses from the load cases listed in Table 1.1.2-7. The punch files containing the analysis results are found in the /hsm/bsommer/ams/nonlin/innercylinder/2000/6-02/ directory. The files are named according to the load case. (i.e.. R2019.pch, R2020.pch, etc.....) The NASPOST list file can be found in /hsm/bsommer/ams/naspost/inner/6-02/ directory and titled innerstress.lis. A copy of this list file is located in appendix 1.1.2C. The load case containing the highest stress for principle, VonMises and shear are shown below in Table 1.1.2-10. Contour plots of the highest principal stress are shown in Figures 1.1.2B-1 through 1.1.2B-4.

Load Case ID	Elem. ID	Elem. Type	Stress Type	MAX Stress [ksi]	Appendix 1.1.2C Reference Page
R1045	202937	Quad4-plate	Max Principal	-36.28	1.1.2C-9
R1045	202937	Quad4-plate	Max Vonm	33.77	1.1.2C-13
R1045	202937	Quad4-plate	Max Shear	18.14	1.1.2C-15

Table 1.1.2.1-1: Highest Stresses for Inner Cylinder Model

Prepared By	Name/Date Bruce R Sommer / 3-12-03	LOCKHEED MARTIN Science, Engineering, Analysis, & Test *Mechanical Systems Analysis Department*	File Name IC Stress.doc
Checked By	3/27/03		Drawing No. SDG39135781-001
Title: AMS-02 VACUUM CASE INNER CYLINDER STRESS ANALYSIS			

Margins of Safety

INNER CYLINDER, VACUUM CASE, AMS-02 2219-T852 (AMS 4144)

Material allowables are from MIL-HBK-5H Table 3.2.7.0(c) for 2.0" to 4.0" thick Hand forging

$Ftu := 60000psi$ Ultimate tensile strength
$Fty := 46000psi$ Compressive yield strength
$Fsu := 32000psi$ Ultimate shear strength

$FSy := 1.1$ Yield Factor of Safety
$FSu := 1.4$ Ultimate Factor of Safety
$\gamma := 0.96$ Thermal reduction factor at 140 F.

The maximum stresses for the inner cylinder occur in load case 1045. Margins for the inner cylinder will be calculated based on the stress values shown below.

$\sigma_{ult} := 36284.0psi$ (max. principal) Element 202937

$\sigma_{yield} := 33776.8psi$ (max. Von-Mises) Element 202937

$\tau_{shear} := 18142.0psi$ (max. shear) Element 202937

Margins of Safety

Ultimate $MSu := \frac{\gamma \cdot Ftu}{\sigma_{ult} \cdot FSu} - 1$ $MSu = 0.134$

Yield $MSy := \frac{\gamma \cdot Fty}{\sigma_{yield} \cdot FSy} - 1$ $MSy = 0.189$

Shear $MSs := \frac{\gamma \cdot Fsu}{\tau_{shear} \cdot FSu} - 1$ $MSs = 0.210$

The Inner Cylinder is acceptable for both vacuum and maximum expected flight loads with a 0.96 temperature reduction factor.

1.1.2.2 Inner Cylinder Weld Analysis

INNER CYLINDER WELD

$Ftu := 32000 psi$ Ultimate tensile strength Provided by Weld Testing conducted by Dan Rybicki. A copy of the weld allowables is shown on page 20 in Appendix 1.1.2.C.

$FSu := 1.4$ Ultimate Factor of Safety

$\gamma := 0.96$ Thermal reduction factor at 140 F.

The stresses for the welded interface between the Inner Cylinder to Conical Flange is calculated using the edge stresses for the Quad4-plate elements located at each end of the conical flanges. The critical weld load cases were determined by sort for the max positive principal stress at the Inner Cylinder to conical flange interface. All 256 load cases were sorted using the loads model to determine the worst load cases for the weld. The worst load cases for the weld coincided with the worst load cases for the Inner Cylinder. The critical weld load case is shown in Table 1.1.2.2-1. The highest weld stress is shown in Table 1.1.2.2-2. The stress contour plot for the weld is shown on Figure 1.1.2B-3.

Load Case	Event	Nx (g)	Ny (g)	Nz (g)	Rx (rad/s^2)	Ry (rad/s^2)	Rz (rad/s^2)
1045	Launch	-5.7	1.6	-5.9	-10	25	18

Table 1.1.2.2-1: Critical Load Case Load Factor Combinations for Inner Cylinder to Conical Flange Weld

Load Case	Elem. ID	Elem. Type	MAX PRIN Bottom (ksi)	Appendic 1.1.2C
R1045	300224	Quad4-plate	22769.4	1.1.2C-2

Table 1.1.2.2-2: Highest Weld Stress for Inner Cylinder to Conical Flange

Prepared By	Name/Date Bruce R. Sommer / 3-12-03	LOCKHEED MARTIN Science, Engineering, Analysis, & Test *Mechanical Systems Analysis Department*	File Name IC Stress doc
Checked By	3/27/03		Drawing No. SDG39135781-001
Title: AMS-02 VACUUM CASE INNER CYLINDER STRESS ANALYSIS			

Margin of Safety for Weld

Ultimate $MSu := \frac{\gamma \cdot Ftu}{\sigma_{ult} \cdot FSu} - 1$ $MSu = -0.036$

The negative margin for the inner cylinder weld is not seen as a major issue for the following reasons:

1. The latest AMS-02 model 2-03 gives max tensile stresses in the weld lower than 20 ksi which would result in positive margins of safety. This is due in large part to the fact that the Vacuum Case is now attached to the USS-02 prior to pulling a vacuum. The AMS-02 model 6-02 has the Vacuum Case detached for the vacuum load. This allows for larger displacements in the conical flanges causing increased bending at the inner cylinder weld interface. Future analysis is expected to use the AMS-02 2-03 model.

2. The 140 deg F temperature used for temperature reduction on the material strength is a conservative number. The inner cylinder is shaded from the sun, so maximum temperatures can probably be expected to remain less than 140 deg.

3. The results of this analysis are based on load factors with an uncertainty factor of 1.5. This is expected to be reduced sometime after the CDR.

4. The vendor for the vacuum case will test weld coupons. The allowable weld stress will be based on the minimum test value, which will not be less than 32 ksi.

Inner Cylinder Analysis Conclusions

The inner Cylinder for the AMS-02 Vacuum Case is acceptable for the loading conditions defined in the ASM-02 Structural Verification Plan for STS and ISS(JSC-28792, Rev.B) and for a total payload weight of 15000lbs. There are several factors that could change the analysis for the Inner Cylinder. Among them is an increase in the mass of the magnet, helium tank or tracker. Other possible impacts to the current analysis , such as changes in inertial load factors due to updated transient analysis, will have to be assessed when they occur.

1.1.2A Inner Cylinder Finite Element Model Details

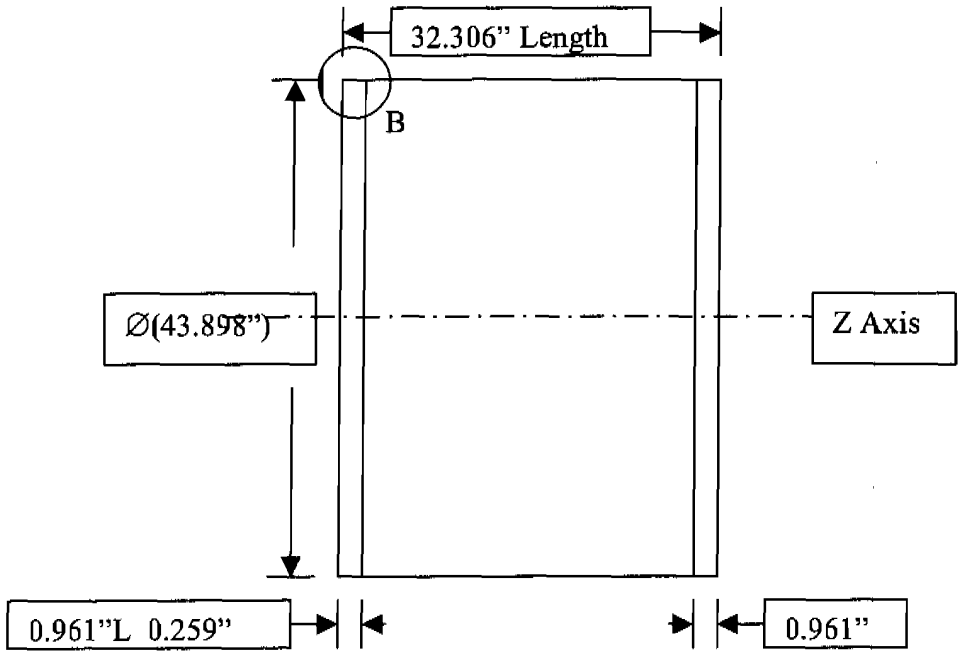

Figure 1.1.2A-1: Side View of Vacuum Case Inner Cylinder

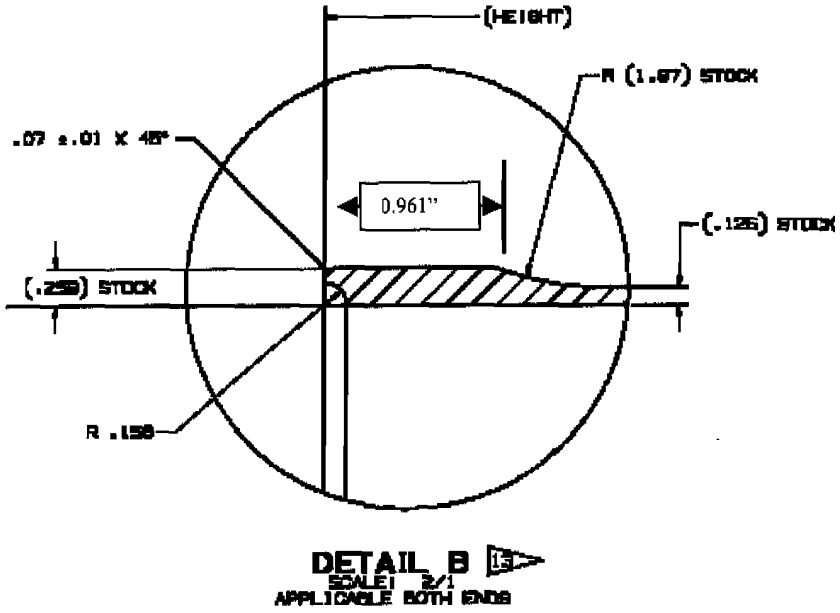

Figure 1.1.2A-2: End Detail of Inner Cylinder

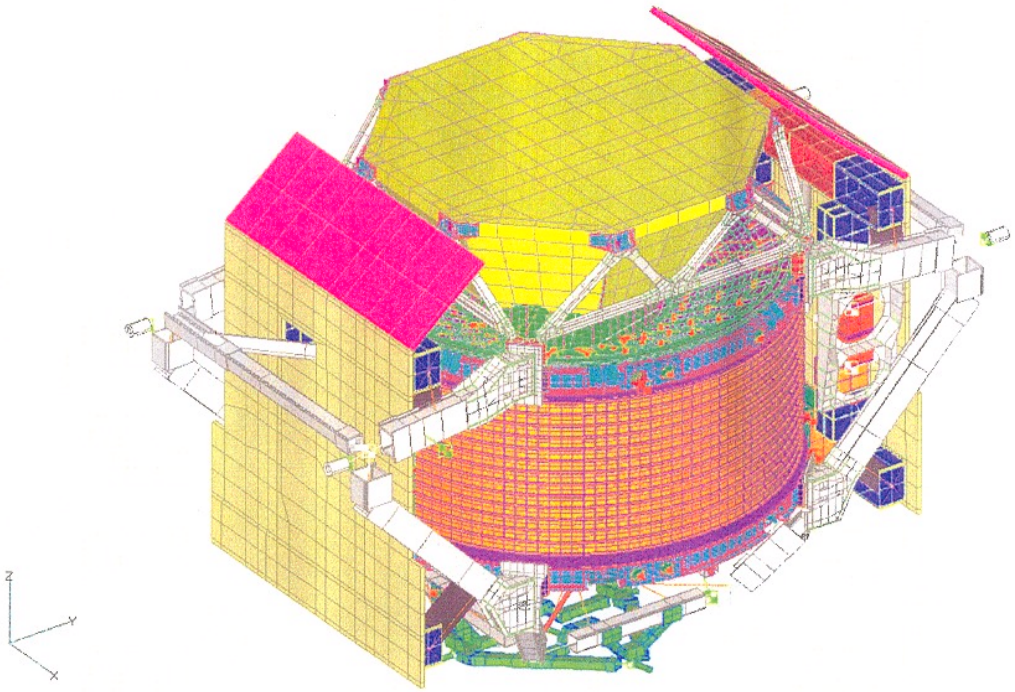

Figure 1.1.2A-2: AMS-02 Model 6-02a

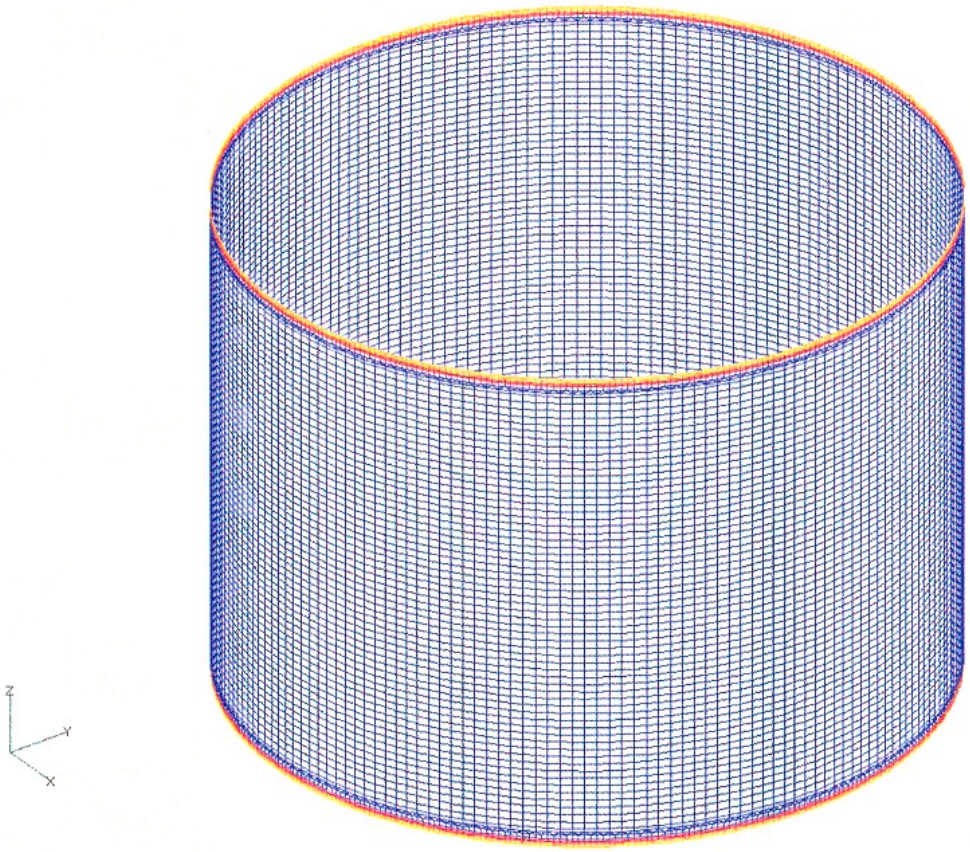

Figure 1.1.2A-4: Inner Cylinder Stress Model

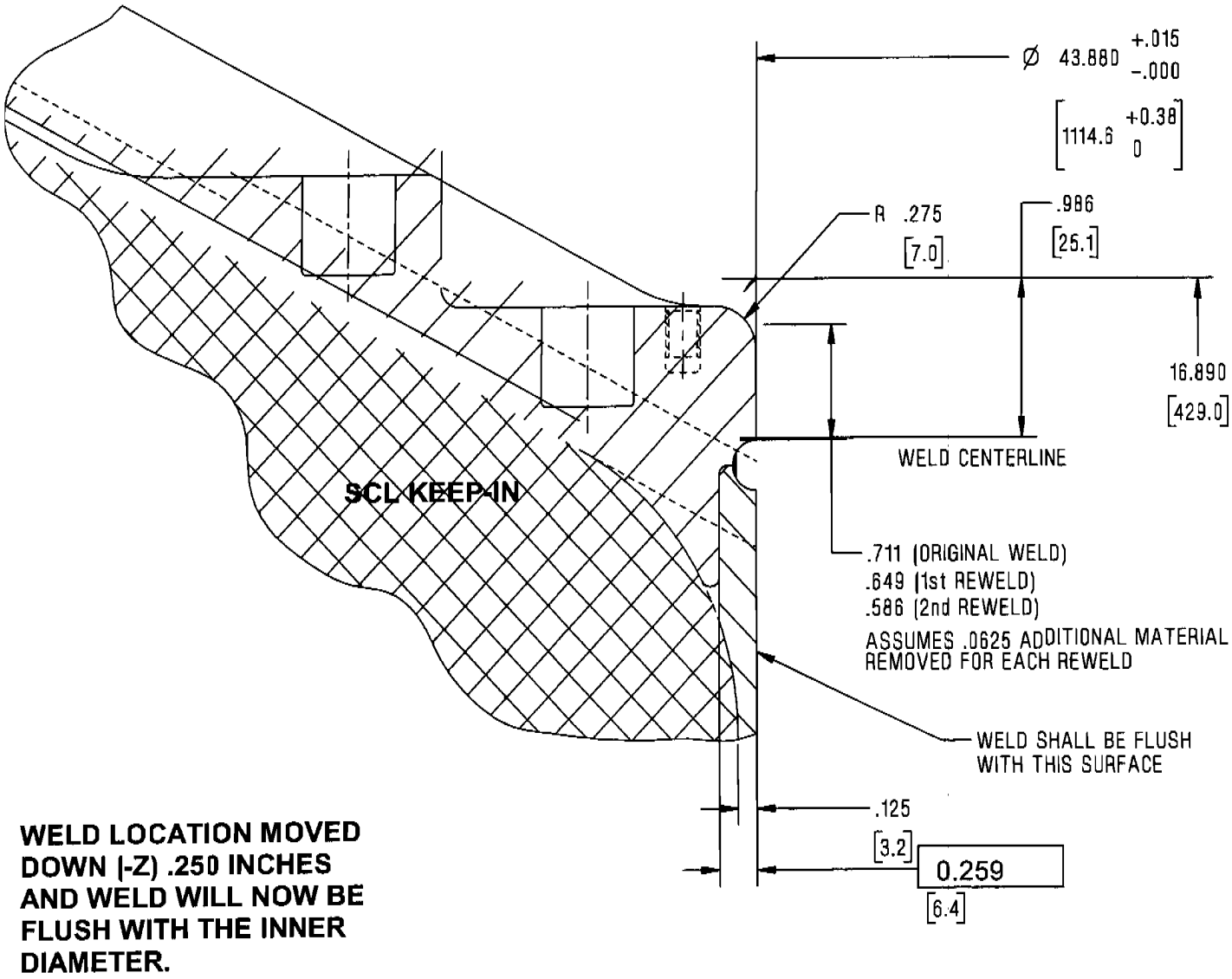

Closeout Weld Location

Figure 1.1.2A-5: Inner Cylinder to Conical Flange Weld Detail

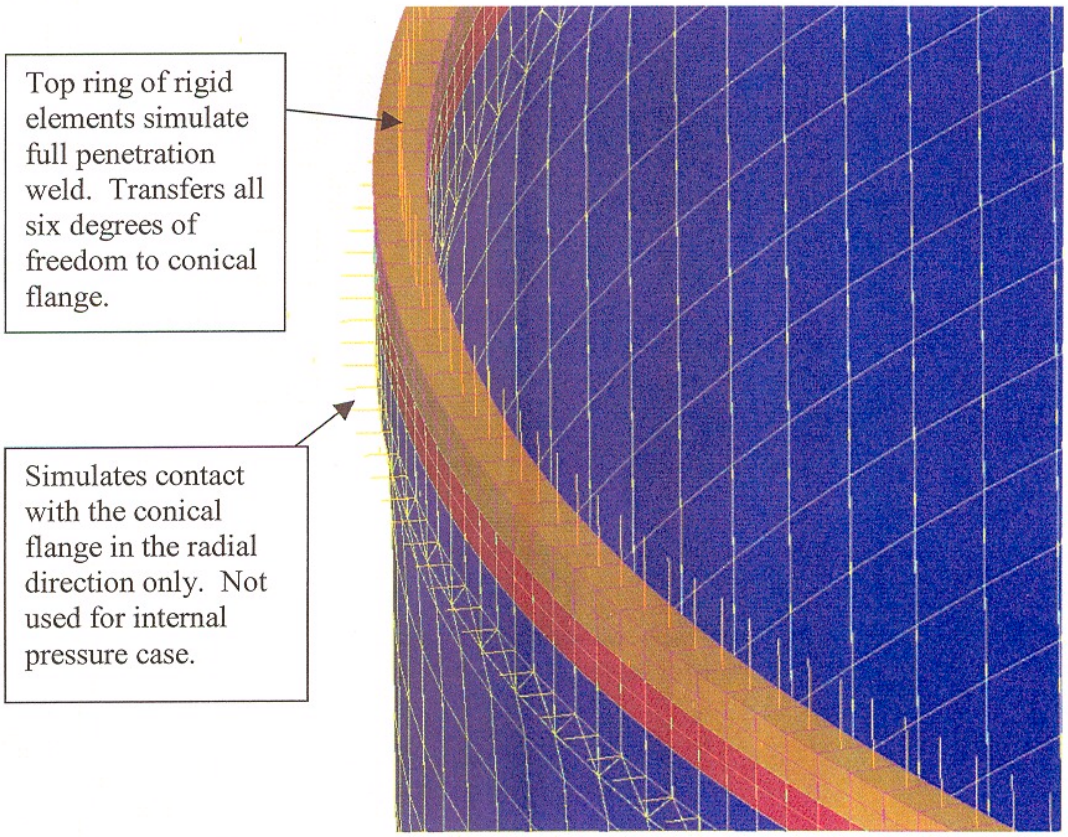

Figure 1.1.2A-6: Finite Element Model Detail for Conical Flange to Inner Cylinder Attachment

1.1.2B Inner Cylinder Stress Contours

Prepared By	Name/Date Bruce R. Sommer / 3-12-03	LOCKHEED MARTIN Science, Engineering, Analysis, & Test *Mechanical Systems Analysis Department*	File Name IC Stress.doc
Checked By	3/20/03		Drawing No. SDG39135781-001
Title: AMS-02 VACUUM CASE INNER CYLINDER STRESS ANALYSIS			

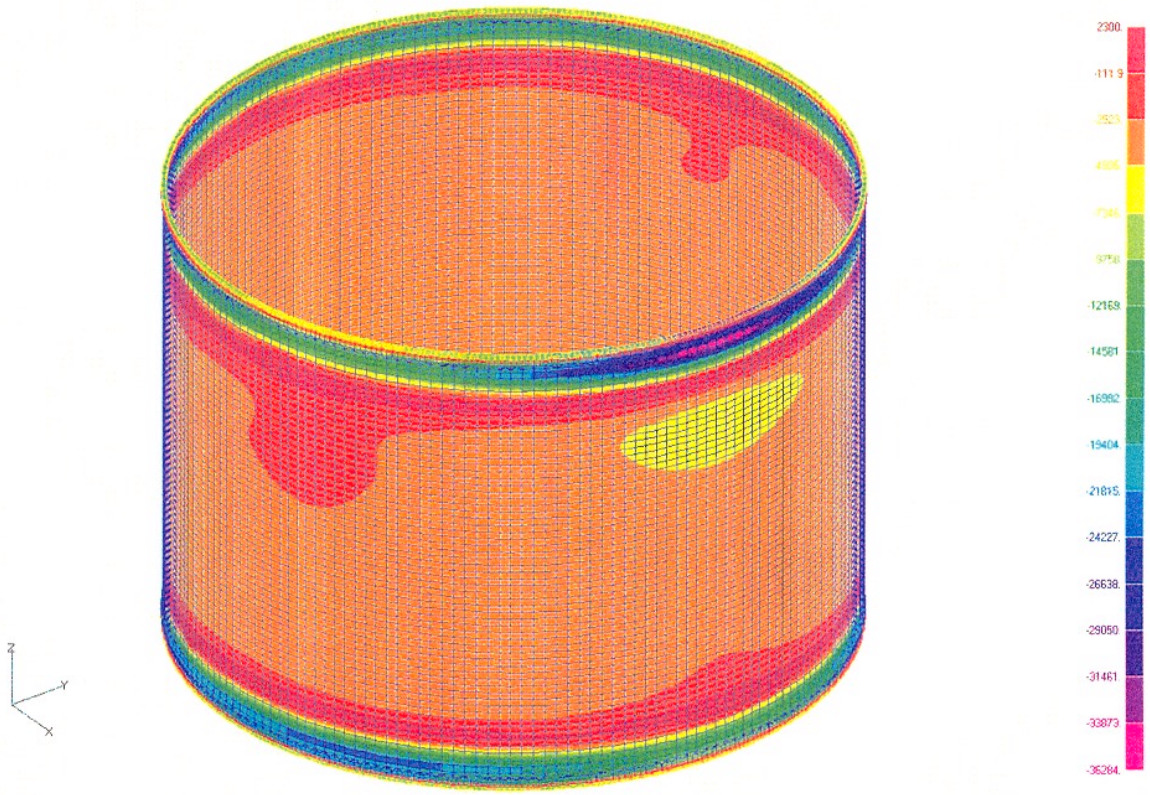

Figure 1.1.2B-1: Inner Cylinder Stress Contour for Load Case 1045

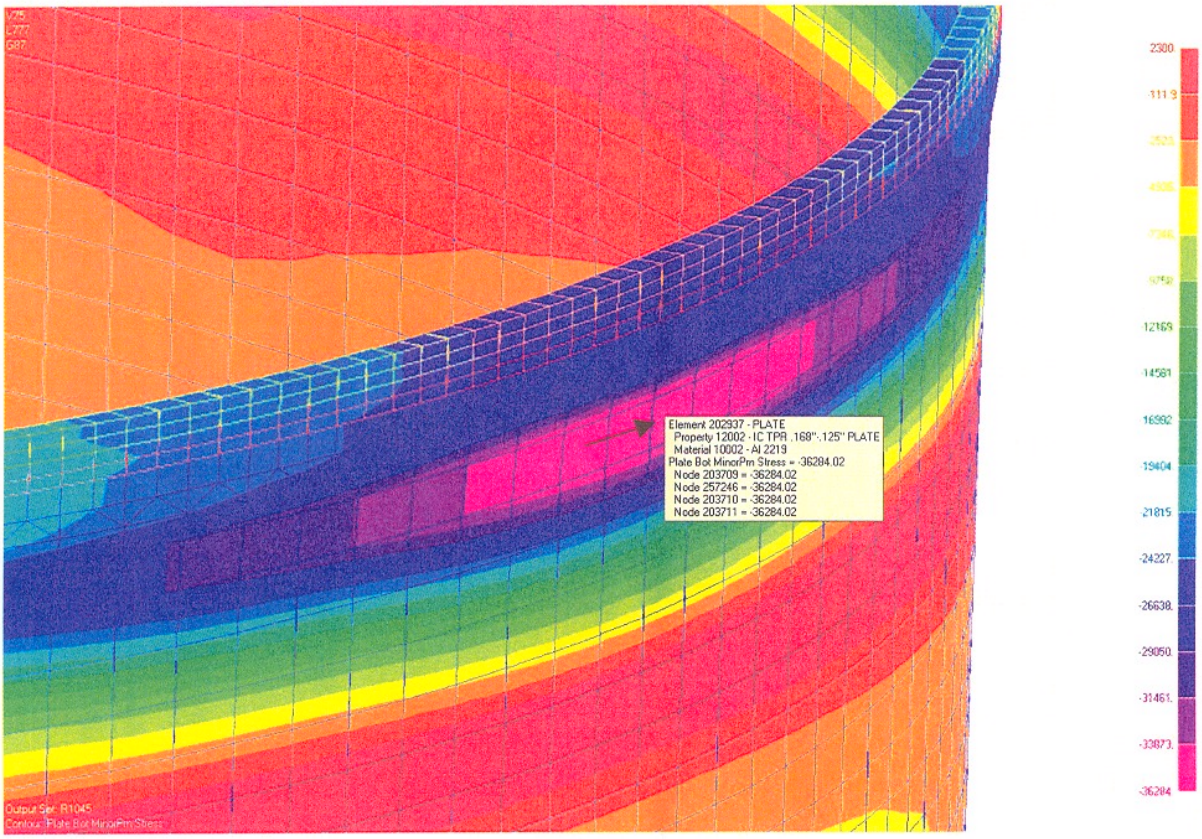

Figure 1.1.2B-2: Max Absolute Principal Stress of 36284psi in Element ID 202937

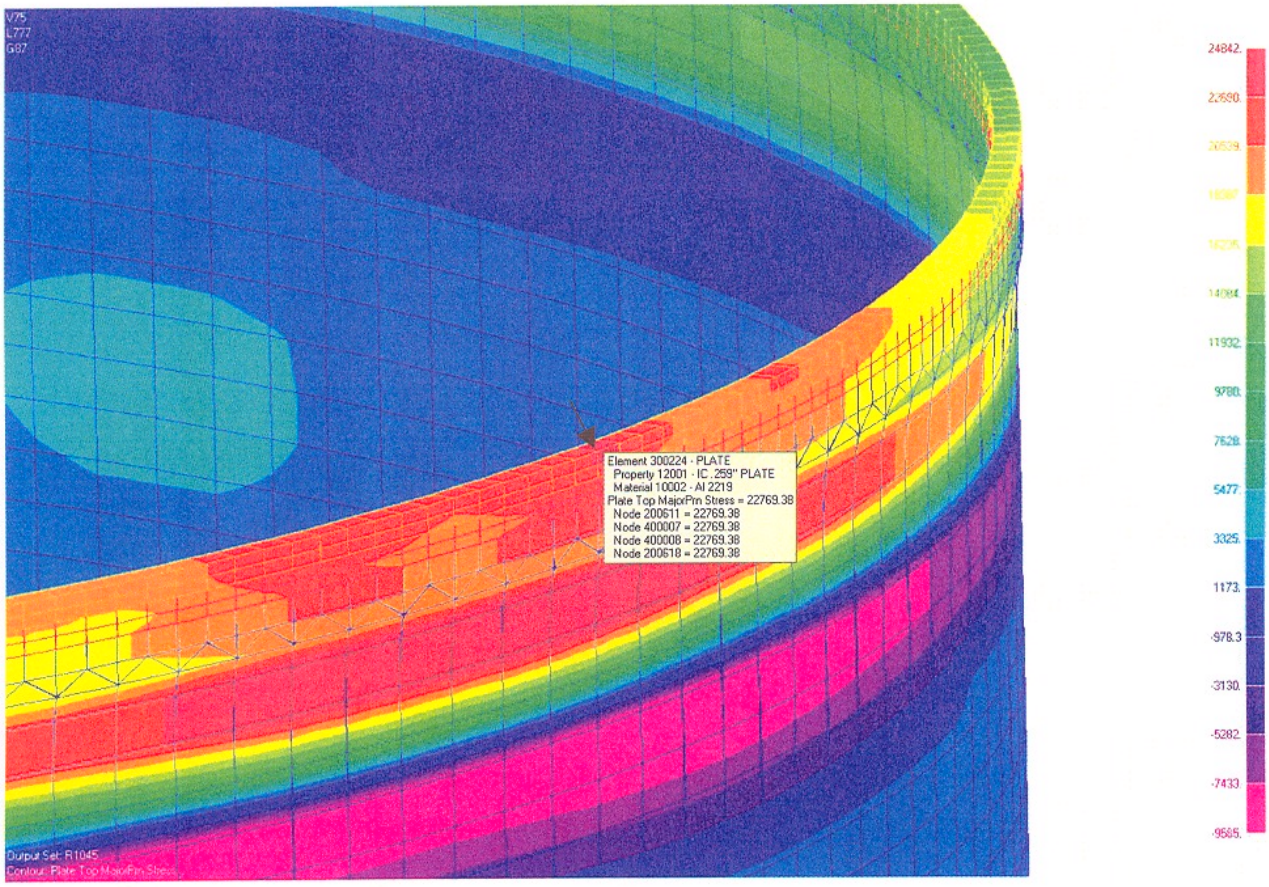

Figure 1.1.2B-3: Load Case 1045 Maximum Weld Stress of 22769.4psi

Prepared By	Name/Date Bruce R. Sommer / 3-12-03	LOCKHEED MARTIN Science, Engineering, Analysis, & Test *Mechanical Systems Analysis Department*	File Name IC Stress.doc
Checked By	3/24/03		Drawing No. SDG39135781-001

Title: AMS-02 VACUUM CASE INNER CYLINDER STRESS ANALYSIS

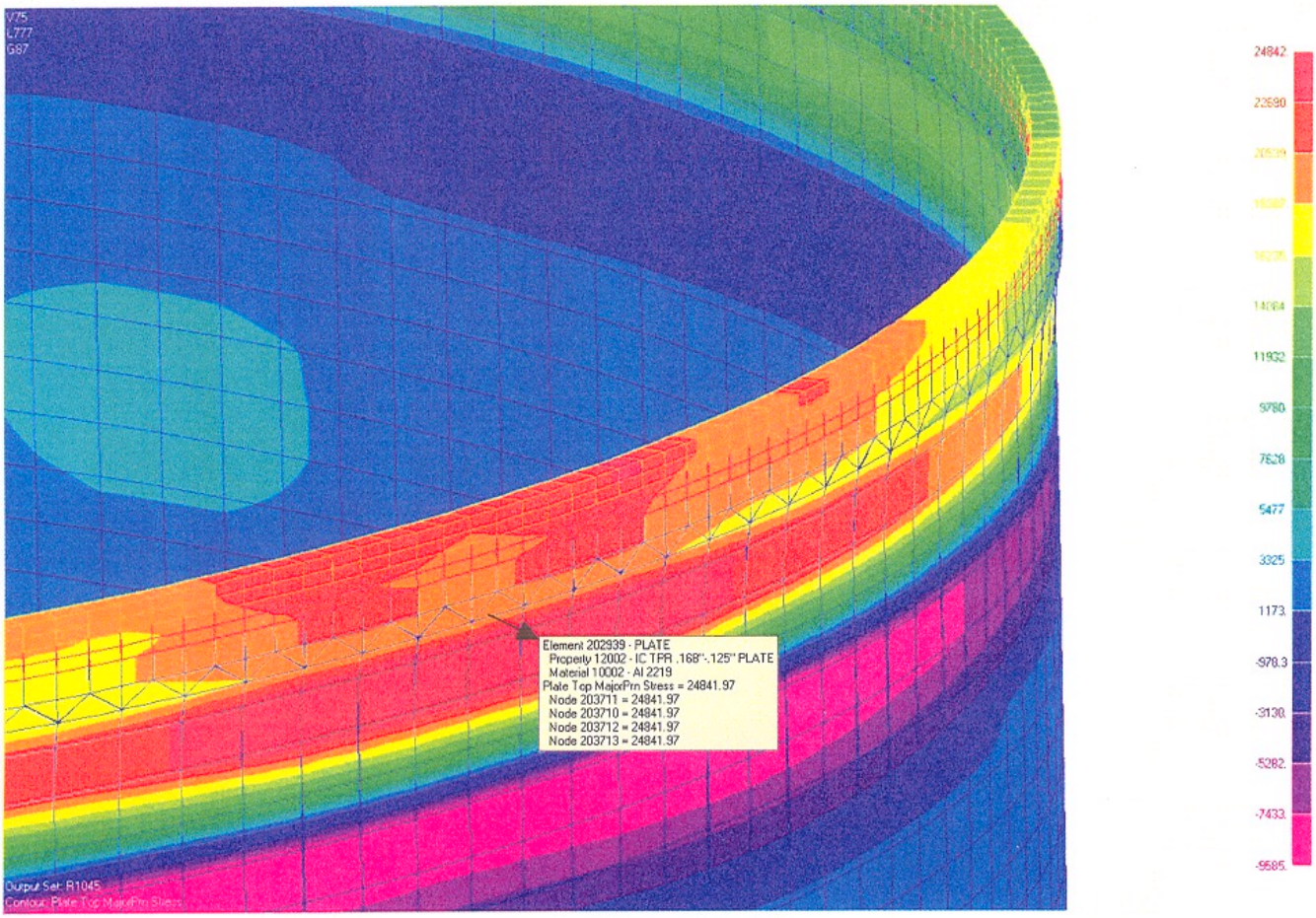

Figure 1.1.2B-4: Max Tensile Stress of 24842 psi In Element ID 202939

1.1.2C Inner Cylinder NASPOST List File and Weld Allowable

```
### $
### $
### $
### $ punch files for sorting
### FILES '/hsm/bsommer/ams/nonlin/innercylinder/1000/6-02/R1008.pch',
### '/hsm/bsommer/ams/nonlin/innercylinder/1000/6-02/R1041.pch',
### '/hsm/bsommer/ams/nonlin/innercylinder/1000/6-02/R1045.pch',
### '/hsm/bsommer/ams/nonlin/innercylinder/1000/6-02/R1062.pch',
### '/hsm/bsommer/ams/nonlin/innercylinder/2000/6-02/R2007.pch',
### '/hsm/bsommer/ams/nonlin/innercylinder/2000/6-02/R2008.pch',
### '/hsm/bsommer/ams/nonlin/innercylinder/2000/6-02/R2016.pch',
### '/hsm/bsommer/ams/nonlin/innercylinder/2000/6-02/R2019.pch',
### '/hsm/bsommer/ams/nonlin/innercylinder/2000/6-02/R2020.pch',
### '/hsm/bsommer/ams/nonlin/innercylinder/2000/6-02/R2027.pch',
### '/hsm/bsommer/ams/nonlin/innercylinder/2000/6-02/R2033.pch',
### '/hsm/bsommer/ams/nonlin/innercylinder/2000/6-02/R2037.pch',
### '/hsm/bsommer/ams/nonlin/innercylinder/2000/6-02/R2041.pch',
### '/hsm/bsommer/ams/nonlin/innercylinder/2000/6-02/R2042.pch',
### '/hsm/bsommer/ams/nonlin/innercylinder/2000/6-02/R2053.pch',
### '/hsm/bsommer/ams/nonlin/innercylinder/2000/6-02/R2054.pch',
### '/hsm/bsommer/ams/nonlin/innercylinder/2000/6-02/R2061.pch'
### $
### $
### $
### SELECT QUAD4-STRESSES; IDS = 200001 THRU 215360 300001 THRU 301536
###   SORT VAR = MAX(MAX-PRIN-TOP,MIN-PRIN-TOP,MAX-PRIN-BOT,
###              MIN-PRIN-BOT)/DESCENDING;OPT=12;
###   IDS = 300001 THRU 301536
###   PRINT 7 8 11 12 ; NCASES=20;
###   HEADING = 'INNER CYLINDER WELD STRESS'
```

Prepared By	Name/Date Bruce R. Sommer / 3-12-03	LOCKHEED MARTIN Science, Engineering, Analysis, & Test *Mechanical Systems Analysis Department*	File Name Appenendix C IC Stress.doc
Checked By	3/24/03		Drawing No. SDG39135781-001
Title: AMS-02 VACUUM CASE INNER CYLINDER STRESS ANALYSIS			

+++ INNER CYLINDER WELD STRESS +++

ID	SUBCASE	MAX-PRIN-TOP	MIN-PRIN-TOP	MAX-PRIN-BOT	MIN-PRIN-BOT
300224	**1045**	**-2.910383E-11**	**-2.856072E+04**	**2.276938E+04**	**-6.230447E+03**
300198	1045	-7.275958E-12	-2.791422E+04	2.266049E+04	-6.649315E+03
300222	1045	-7.275958E-12	-2.854286E+04	2.233575E+04	-6.547163E+03
300200	1045	3.637979E-12	-2.811640E+04	2.231661E+04	-6.915944E+03
300226	1045	-1.818989E-11	-2.770324E+04	2.195473E+04	-7.748580E+03
300204	1045	-3.637979E-12	-2.815632E+04	2.180650E+04	-6.464165E+03
300202	1045	3.637979E-12	-2.803249E+04	2.178903E+04	-7.063375E+03
300220	1045	3.637979E-12	-2.824791E+04	2.176055E+04	-6.875551E+03
300218	1045	-7.275958E-12	-2.823561E+04	2.172687E+04	-6.422218E+03
300196	1045	-2.728484E-11	-2.690570E+04	2.171416E+04	-7.902264E+03
300206	1045	0.000000E+00	-2.827923E+04	2.167653E+04	-6.249635E+03
300216	1045	-2.182787E-11	-2.829233E+04	2.158753E+04	-6.246217E+03
300223	1045	-7.275958E-12	-2.781821E+04	2.157247E+04	-8.149739E+03
300197	1045	-7.275958E-12	-2.728128E+04	2.146622E+04	-8.454465E+03
300221	1045	3.637979E-12	-2.797253E+04	2.145190E+04	-8.040249E+03
300199	1045	0.000000E+00	-2.760920E+04	2.140591E+04	-8.329695E+03
300208	1045	-2.182787E-11	-2.822457E+04	2.111992E+04	-6.619993E+03
300219	1045	-3.637979E-12	-2.773803E+04	2.110677E+04	-8.136816E+03

```
300201      1045 -7.275958E-12 -2.752976E+04  2.110132E+04 -8.290676E+03
300214      1045 -7.275958E-12 -2.822809E+04  2.107993E+04 -6.590840E+03
```

```
### $
### SORT VAR = MAXABS(MAX-PRIN-TOP,MIN-PRIN-TOP,MAX-PRIN-BOT,
###              MIN-PRIN-BOT)/DESCENDING;OPT=12;
###  IDS = 300001 THRU 301536
###  PRINT 7 8 11 12 ; NCASES=20;
###  HEADING = 'INNER CYLINDER WELD STRESS'
```

+++ INNER CYLINDER WELD STRESS +++

ID	SUBCASE	MAX-PRIN-TOP	MIN-PRIN-TOP	MAX-PRIN-BOT	MIN-PRIN-BOT
300224	1045	-2.910383E-11	-2.856072E+04	2.276938E+04	-6.230447E+03
300222	1045	-7.275958E-12	-2.854286E+04	2.233575E+04	-6.547163E+03
300216	1045	-2.182787E-11	-2.829233E+04	2.158753E+04	-6.246217E+03
300206	1045	0.000000E+00	-2.827923E+04	2.167653E+04	-6.249635E+03
300220	1045	3.637979E-12	-2.824791E+04	2.176055E+04	-6.875551E+03
300218	1045	-7.275958E-12	-2.823561E+04	2.172687E+04	-6.422218E+03
300214	1045	-7.275958E-12	-2.822809E+04	2.107993E+04	-6.590840E+03
300208	1045	-2.182787E-11	-2.822457E+04	2.111992E+04	-6.619993E+03
300212	1045	-2.910383E-11	-2.816387E+04	2.064660E+04	-6.920436E+03
300210	1045	-1.455192E-11	-2.816149E+04	2.064343E+04	-6.958839E+03
300204	1045	-3.637979E-12	-2.815632E+04	2.180650E+04	-6.464165E+03
300200	1045	3.637979E-12	-2.811640E+04	2.231661E+04	-6.915944E+03
300202	1045	3.637979E-12	-2.803249E+04	2.178903E+04	-7.063375E+03
300221	1045	3.637979E-12	-2.797253E+04	2.145190E+04	-8.040249E+03
300198	1045	-7.275958E-12	-2.791422E+04	2.266049E+04	-6.649315E+03
300223	1045	-7.275958E-12	-2.781821E+04	2.157247E+04	-8.149739E+03
300219	1045	-3.637979E-12	-2.773803E+04	2.110677E+04	-8.136816E+03
300226	1045	-1.818989E-11	-2.770324E+04	2.195473E+04	-7.748580E+03

300199	1045	0.000000E+00	-2.760920E+04	2.140591E+04	-8.329695E+03
300217	1045	-1.818989E-11	-2.757943E+04	2.098306E+04	-7.909034E+03

```
### $
### SORT VAR = MAXABS(MAX-PRIN-TOP,MIN-PRIN-TOP,MAX-PRIN-BOT,
### MIN-PRIN-BOT)/DESCENDING;OPT=12;
### IDS = 200001 THRU 215360
### PRINT 7 8 11 12 16 17 ; NCASES=10;
### HEADING = 'INNER CYLINDER STRESS'
```

+++ INNER CYLINDER STRESS +++

ID	SUBCASE	MAX-PRIN-TOP	MIN-PRIN-TOP	MAX-PRIN-BOT	MIN-PRIN-BOT	MAXABS-SHR	MAXABS-VON-MI
202937	**1045**	**-2.910383E-11**	**-3.628402E+04**	**2.480579E+04**	**-1.104668E+04**	**1.814201E+04**	**3.377675E+04**
202935	1045	-2.910383E-11	-3.623290E+04	2.476554E+04	-1.102578E+04	1.811645E+04	3.371614E+04
202939	1045	3.637979E-12	-3.597847E+04	2.484197E+04	-1.119222E+04	1.801710E+04	3.360989E+04
202933	1045	1.091394E-11	-3.580464E+04	2.471137E+04	-1.114082E+04	1.792610E+04	3.340833E+04
202941	1045	-3.637979E-12	-3.531302E+04	2.466120E+04	-1.153383E+04	1.809751E+04	3.315889E+04
202931	1045	-7.275958E-12	-3.498122E+04	2.443062E+04	-1.144923E+04	1.793993E+04	3.278475E+04
202943	1045	3.637979E-12	-3.433857E+04	2.407881E+04	-1.216960E+04	1.812421E+04	3.236404E+04
203127	2027	-3.637979E-12	-3.427497E+04	2.376650E+04	-9.043349E+03	1.713749E+04	3.153733E+04
203129	2027	-1.818989E-11	-3.425290E+04	2.377392E+04	-9.048785E+03	1.712645E+04	3.153786E+04
203125	2027	0.000000E+00	-3.385995E+04	2.374479E+04	-9.181589E+03	1.692998E+04	3.123292E+04

```
### $
### SORT VAR = MAX(MAX-PRIN-TOP,MIN-PRIN-TOP,MAX-PRIN-BOT,
### MIN-PRIN-BOT)/DESCENDING;OPT=12;
### IDS = 200001 THRU 215360
### PRINT 7 8 11 12 16 17 ; NCASES=10;
### HEADING = 'INNER CYLINDER STRESS'
```

+++ INNER CYLINDER STRESS +++

ID	SUBCASE	MAX-PRIN-TOP	MIN-PRIN-TOP	MAX-PRIN-BOT	MIN-PRIN-BOT	MAXABS-SHR	MAXABS-VON-MI
202939	1045	3.637979E-12	-3.597847E+04	2.484197E+04	-1.119222E+04	1.801710E+04	3.360989E+04
202937	1045	-2.910383E-11	-3.628402E+04	2.480579E+04	-1.104668E+04	1.814201E+04	3.377675E+04
202935	1045	-2.910383E-11	-3.623290E+04	2.476554E+04	-1.102578E+04	1.811645E+04	3.371614E+04
202933	1045	1.091394E-11	-3.580464E+04	2.471137E+04	-1.114082E+04	1.792610E+04	3.340833E+04
202941	1045	-3.637979E-12	-3.531302E+04	2.466120E+04	-1.153383E+04	1.809751E+04	3.315889E+04
202931	1045	-7.275958E-12	-3.498122E+04	2.443062E+04	-1.144923E+04	1.793993E+04	3.278475E+04
202943	1045	3.637979E-12	-3.433857E+04	2.407881E+04	-1.216960E+04	1.812421E+04	3.236404E+04
203129	2027	-1.818989E-11	-3.425290E+04	2.377392E+04	-9.048785E+03	1.712645E+04	3.153786E+04
203131	2027	7.275958E-12	-3.380718E+04	2.376755E+04	-9.201719E+03	1.690359E+04	3.123948E+04
203127	2027	-3.637979E-12	-3.427497E+04	2.376650E+04	-9.043349E+03	1.713749E+04	3.153733E+04

```
### $
### SORT VAR = 17/DESCENDING;OPT=12;
### IDS = 200001 THRU 215360
### PRINT 17 ; NCASES=10;
### HEADING = 'INNER CYLINDER VON-MISES STRESS'
```

+++ INNER CYLINDER VON-MISES STRESS +++

ID	SUBCASE	MAXABS-VON-MI
202937	**1045**	**3.377675E+04**
202935	1045	3.371614E+04
202939	1045	3.360989E+04
202933	1045	3.340833E+04
202941	1045	3.315889E+04
202931	1045	3.278475E+04
202943	1045	3.236404E+04
202929	1045	3.180745E+04
202945	1045	3.171103E+04
203129	2027	3.153786E+04

```
### $
### SORT VAR =MAXABS(10,14)/DESCENDING;OPT=12;
### IDS = 200001 THRU 215360
### PRINT 10 14; NCASES=10;
### HEADING = 'INNER CYLINDER MAXABS SHEAR STRESS'
```

+++ INNER CYLINDER MAXABS SHEAR STRESS +++

ID	SUBCASE	MAX-SHEAR-TOP	MAX-SHEAR-BOT
202937	**1045**	**1.814201E+04**	**1.792624E+04**
202943	1045	1.716929E+04	1.812421E+04
202935	1045	1.811645E+04	1.789566E+04
202941	1045	1.765651E+04	1.809751E+04
202945	1045	1.665001E+04	1.806459E+04
202939	1045	1.798923E+04	1.801710E+04
202931	1045	1.749061E+04	1.793993E+04
202933	1045	1.790232E+04	1.792610E+04
202947	1045	1.619782E+04	1.790150E+04
202929	1045	1.691196E+04	1.787413E+04

```
### $
### SELECT TRIA3-STRESSES; IDS = 200001 THRU 215360
###    SORT VAR = MAXABS(MAX-PRIN-TOP,MIN-PRIN-TOP,MAX-PRIN-BOT,
###                      MIN-PRIN-BOT)/DESCENDING;OPT=12
###    PRINT 7 8 11 12 ; NCASES=10;
###    HEADING = 'INNER CYLINDER STRESS'
```

+++ INNER CYLINDER STRESS +++

ID	SUBCASE	MAX-PRIN-TOP	MIN-PRIN-TOP	MAX-PRIN-BOT	MIN-PRIN-BOT
203649	1045	-7.275958E-12	-2.782980E+04	1.835888E+04	-1.334157E+04
203646	1045	0.000000E+00	-2.756885E+04	1.834583E+04	-1.305539E+04
203650	1045	0.000000E+00	-2.755677E+04	1.821287E+04	-1.279212E+04
204211	1045	0.000000E+00	-2.745629E+04	1.821849E+04	-1.333371E+04
204214	1045	-3.637979E-12	-2.741518E+04	1.826928E+04	-1.302784E+04
203652	1045	3.637979E-12	-2.736368E+04	1.796030E+04	-1.422167E+04
203651	1045	-2.910383E-11	-2.730379E+04	1.831196E+04	-1.250136E+04
203654	1045	-1.455192E-11	-2.730158E+04	1.816492E+04	-1.318930E+04
203647	1045	7.275958E-12	-2.729453E+04	1.828668E+04	-1.241145E+04
204213	1045	-2.182787E-11	-2.718514E+04	1.800586E+04	-1.283830E+04

```
### $
### EXIT
```

Prepared By	Name/Date Bruce R. Sommer / 3-12-03	**LOCKHEED MARTIN** **Science, Engineering, Analysis, & Test** *Mechanical Systems Analysis Department*	File Name Appenendix C IC Stress.doc
Checked By	3/20/03		Drawing No. SDG39135781-001
Title: AMS-02 VACUUM CASE INNER CYLINDER STRESS ANALYSIS			

```
*** NORMAL EXIT: EXIT
END OF JOB
```

Sommer, Bruce

From: RYBICKI, DANIEL (JSC-ES4) (LM) [daniel.rybicki@lmco.com]
Sent: Wednesday, March 19, 2003 4:59 PM
To: 'Carter, Howard'
Cc: Sommer, Bruce; Balas, Chittur; MARTINEZ, ADRIEN (NICK) (JSC-ES4) (LM); FIGERT, JOHN D. (JSC-ES4) (LM); 'phil.mott@lmco.com'; 'trent.martin@lmco.com'; 'r.dasgupta@lmco.com'
Subject: RE: AMS-02 VC Inner Cylinder weld temperatures for landing - Weld Allowable

Howard,

Based on our roundtable discussion yesterday with regarding the need for a new allowable for the VC closeout weld joints, I think we all are in agreement on an allowable of 32 ksi, provided the max environmental temperature issue can be resolved, and it appears it may have been according to Craig's message below. This value (32 ksi minimum) is compliant with the Class II weld requirement stated by MSFC-SPEC-504C (governing document) however, we agreed that the fabricators qualification data population shall exhibit NO DATA VALUES lower than 32 ksi which realistically will result in a population mean (average) greater than 32 ksi which is better than the the Class II stated minimum average strength of 32 ksi. So essentially, we are ignoring a minimum average requirement and just asking for a minimum absolute strength.

So, the drawing/SOW should state something to the tune of:

"Welding shall be per MSFC-SPEC-504C, Class II except that the weld process shall be qualified to show the capability to produce a weld strength whereas no single test value from the test sample population results in less than 32 ksi. All qualification test welds and test specimens shall conform to paragraph 3.3.2 of MSFC-SPEC-504C."

With the stated requirement written as such in the SOW, our current baselined welding process remains capable of achieving that as we always showed values higher than 32 ksi. So it's a good thing we don't have to deviate from that. Moreover, as a contingency position, we can always fall back on the weld procedure with an oscillated cover pass (wider weld bead) to gain more strength but we shouldn't reveal that hand unless the vendor shows to be in trouble with their weld process qualification efforts.

Does everyone agree with this new requirement and the way we need to state it as an engineering requirement?

Dan Rybicki
Materials & Processes
Welding and Brazing Applications
LMSO-NASA/JSC - ES4
(281) 244-5181 Phone
(281) 527-6581 Pager
(281) 244-1301 Fax
daniel.rybicki@jsc.nasa.gov

-----Original Message-----
From: Carter, Howard [mailto:howard.carter@lmco.com]
Sent: Wednesday, March 19, 2003 4:16 PM
To: RYBICKI, DANIEL (X-LM OPERATIONS SUPPORT)
Cc: Sommer, Bruce; Balas, Chittur
Subject: FW: AMS-02 VC Inner Cylinder weld temperatures for landing

Section 1.1.3.1 OUTER CYLINDER FLANGES

Prepared By	Name/Date V.Bulsara / 3-7-03	LOCKHEED MARTIN Science, Engineering, Analysis, & Test *Mechanical Systems Analysis Department*	File Name ocflg.mcd
Checked By	3/7/03		Drawing No. SDG391357779

Title: **Analysis of Outer Cylinder Flanges**

Note:
1) *A = Axial, S = Shear, B = Buckling, Bg = Bending*
2) *In structural analysis, factors of safety are 1.4 ,1.1 and 1.0 for ultimate, yield and fail-safe loads, respectively*
3) *Margin of Safety that is greater than 5.0 is defined as High M.S.*
4) *U = Ultimate, Y = Yield, F = Fail-Safe*
5) *Allowables includes temperature red. factors of 0.92 and 0.98 for ultimate and yield, respectively*

Part Information				Structural Analysis					
Member	DWG. No.	Specification	Material	Load Type	Load or Stress			M.S.	Ref. Page
					Applied	Allowable			
Upper Flange	SDG39135779	AMS 4108	7050-T7452	A, Bg	3.49e4psi	6.60e4psi	U	0.22	1.1.3.1-8
Lower Flange	SDG39135779	AMS 4108	7050-T7452	A, Bg	2.37e4psi	6.60e4psi	U	0.83	1.1.3.1-11
Upper Flange fail-safe	SDG39135779	AMS 4108	7050-T7452	A, Bg	3.59e4psi	6.60e4psi	F	0.69	1.1.3.1-19
Lower Flange fail-safe	SDG39135780	AMS 4109	7050-T7453	A, Bg	2.23e4psi	6.60e4psi	F	1.73	1.1.3.1-16

Prepared By	Name/Date V.Bulsara / 3-7-03	LOCKHEED MARTIN Science, Engineering, Analysis, & Test *Mechanical Systems Analysis Department*	File Name ocflg.mcd
Checked By	3/7/03		Drawing No. SDG391357779

Title: **Analysis of Outer Cylinder Flanges**

1. Introduction:

The picture shows the locations of the Upper and Lower Outer Cylinder (OC) Flanges in the Vacuum Case model.

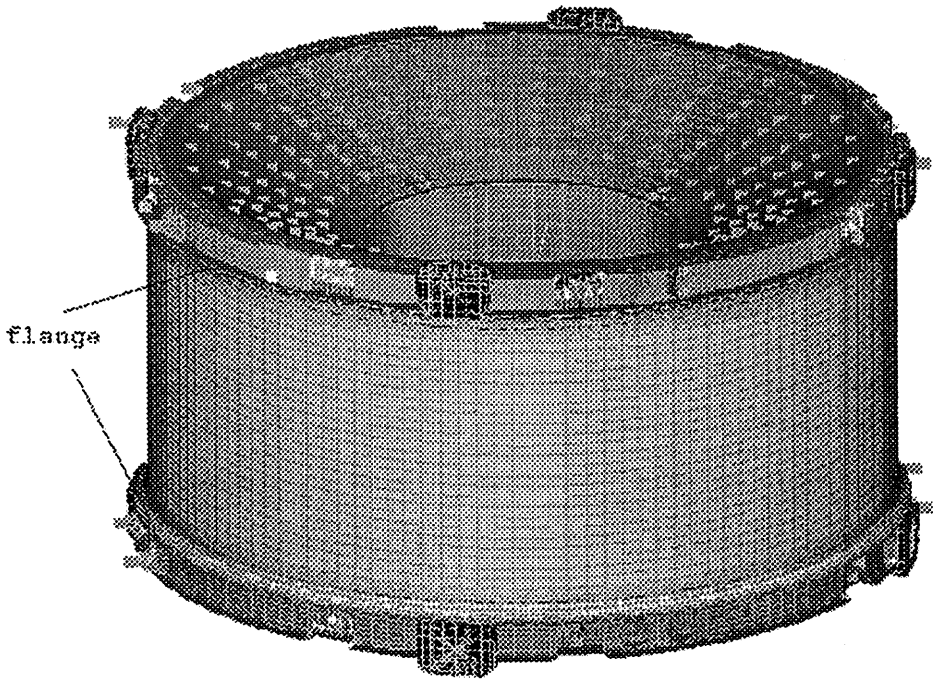

Prepared By	Name/Date V.Bulsara / 3-7-03	LOCKHEED MARTIN Science, Engineering, Analysis, & Test *Mechanical Systems Analysis Department*	File Name ocflg.mcd
Checked By	3/7/03		Drawing No. SDG391357779

Title: **Analysis of Outer Cylinder Flanges**

This picture shows the cross-section of the flanges.

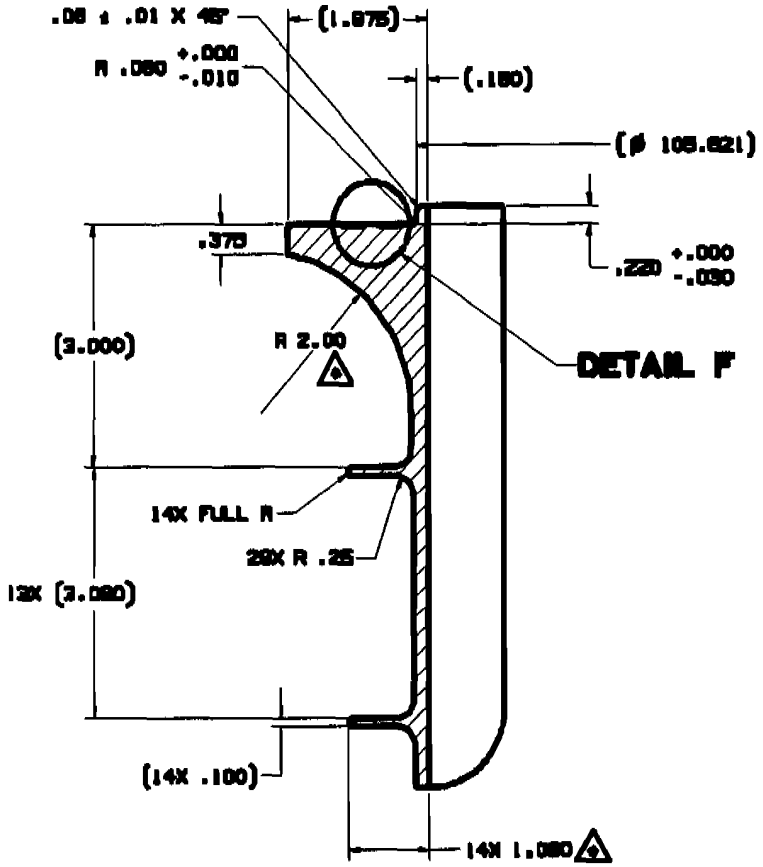

2. Method:

a. Two flanges which each have a 2" fillet radius are modeled.

b. These flanges are meshed as 8-noded CHEXA and 6-noded CPENTA elements in FEMAP V.8.0.

c. Material is 7050-T7452 AL rolled ring forging AMS 4108.

d. RSSCON elements are used for the connection between the OC wall and flanges.

e. To represent bolt connections between Flanges and Rings, 392 RBE2 (192 for the Upper and 200 for the Lower) elements associated with CBUSH element are used.

i. RBE2 has DOF(123000).

ii. CBUSH has stiffness (9.66e4, 9.66e5, 4.105e6, 0, 0, 0) and (6.79e4, 6.79e4, 4.105e6) lbs/in for A- and B-bolt, respectively (see Appendix B). The A-bolts are retained with nuts and the B-bolts are retained with inserts.

f. To represent bolt connection between Conical Flanges and Support Ring, CBUSH elements are used

i. CBUSH has stiffness (2.7e5, 2.7e5, 4.4e6, 0, 0, 0) lbs/in.

g. External 1-atm pressure is applied on flanges.

h. The model of Outer Cylinder Flanges is inserted into the model of VC-4-02.

i. The entire AMS-02 model is analyzed by using MSC/NASTRAN V.70.7.

3. Model Information:

a. The NASTRAN data file is at: /hsm/phoang/ams2/ocflg/ocflg402.blk.

b. The model check of Vacuum Case including Upper and Lower Flanges is performed. The results below show that the FEA math model is correct. NASTRAN output format is enclosed in Appendix A.

i. For matrix KGG:

RESULTS OF RIGID BODY CHECKS OF MATRIX KGG (G-SET) FOLLOW:

DIRECTION	STRAIN ENERGY	PASS/FAIL
1	2.626147E-07	PASS
2	1.219635E-07	PASS
3	1.014317E-06	PASS
4	2.217866E-03	PASS
5	4.882478E-04	PASS
6	1.046322E-03	PASS

ii. For matrix KNN:

RESULTS OF RIGID BODY CHECKS OF MATRIX KNN (N-SET) FOLLOW:

DIRECTION	STRAIN ENERGY	PASS/FAIL
1	7.900753E-08	PASS
2	4.105746E-07	PASS
3	1.525903E-06	PASS
4	4.349769E-03	PASS
5	2.323911E-03	PASS
6	3.658452E-04	PASS

iii.For matrix KFF:

RESULTS OF RIGID BODY CHECKS OF MATRIX KFF (F-SET) FOLLOW:

DIRECTION	STRAIN ENERGY	PASS/FAIL
1	7.900753E-08	PASS
2	4.105746E-07	PASS
3	1.525903E-06	PASS
4	4.349769E-03	PASS
5	2.323911E-03	PASS
6	3.658452E-04	PASS

3. Model Information: (Cont'd)

iv.Eigenvalue Summary: First six modes are zero; transition modes are well separated.

MODE NO.	EIGENVALUE	RADIANS	CYCLES	GENERALIZED MASS	GENERALIZED STIFFNESS
1	-3.83E-07	6.19E-04	9.85E-05	1.00E+00	-3.83E-07
2	7.77E-08	2.79E-04	4.44E-05	1.00E+00	7.77E-08
3	1.63E-07	4.04E-04	6.43E-05	1.00E+00	1.63E-07
4	2.74E-07	5.23E-04	8.32E-05	1.00E+00	2.74E-07
5	4.44E-07	6.67E-04	1.06E-04	1.00E+00	4.44E-07
6	7.01E-07	8.37E-04	1.33E-04	1.00E+00	7.01E-07
7	2.16E+05	4.64E+02	7.39E+01	1.00E+00	2.16E+05
8	3.31E+05	5.75E+02	9.15E+01	1.00E+00	3.31E+05
9	3.69E+05	6.07E+02	9.67E+01	1.00E+00	3.69E+05
10	3.88E+05	6.23E+02	9.91E+01	1.00E+00	3.88E+05

v. Weight Summary: (Total weight = 386.0886 * MASS = 386.0886 * 6.41079 = **2475.1 lbf**)

(The actual VC weighs **2474.48lbf** - Ref. *AMS-02 4-02 Weights.xls*)

OUTPUT FROM WEIGHT CHECK

0 DEGREES OF FREEDOM SET = G

0 REFERENCE POINT = 0

M O

```
* 6.410790E+00  2.775558E-17 -2.168404E-18 -8.881784E-14  2.515319E+03 -2.577948E+00 *
* 2.775558E-17  6.410790E+00 -1.387779E-17 -2.515319E+03  5.684342E-14 -2.100329E+00 *
* -2.168404E-18 -1.387779E-17  6.410790E+00  2.577948E+00  2.100329E+00 -1.110223E-15 *
* -8.881784E-14 -2.515319E+03  2.577948E+00  9.973527E+05 -1.172493E+02  8.379405E+02 *
* 2.515319E+03  5.684342E-14  2.100329E+00 -1.172493E+02  9.969594E+05 -9.187751E+02 *
* -2.577948E+00 -2.100329E+00 -1.110223E-15  8.379405E+02 -9.187751E+02  1.394058E+04 *
```

S

```
* 1.000000E+00  0.000000E+00  0.000000E+00 *
* 0.000000E+00  1.000000E+00  0.000000E+00 *
* 0.000000E+00  0.000000E+00  1.000000E+00 *
```

DIRECTION

MASS AXIS SYSTEM (S)	MASS	X-C.G.	Y-C.G.	Z-C.G.
X	6.410790E+00	-1.385443E-14	4.021265E-01	3.923571E+02
Y	6.410790E+00	-3.276241E-01	8.866835E-15	3.923571E+02
Z	6.410790E+00	-3.276241E-01	4.021265E-01	-1.731804E-16

I(S)

```
* 1.044806E+04  1.180939E+02 -1.386131E+01 *
* 1.180939E+02  1.005509E+04 -9.270132E+01 *
* -1.386131E+01 -9.270132E+01  1.393886E+04 *
```

I(Q)

```
* 1.394110E+04                *
*              1.002013E+04    *
*                           1.048078E+04 *
```

Q

```
* -3.164162E-03  2.666602E-01  9.637854E-01 *
* -2.375237E-02  9.634983E-01 -2.666587E-01 *
* -9.997129E-01 -2.373593E-02  3.285144E-03 *
```

3. Model Information: (Cont'd)

c. Additional model checks are based on the Trunnion loads. These loads in Strap Port model for each load case are closely matched with those in the Load model. Table 1 shows few samples for the comparision between these loads.

		TRUNNION FORCES (lbs)						Differences					
ID	SUBCASE	From Load Model			From OC Flange Model			FX		FY		FZ	
		FX	FY	FZ	FX	FY	FZ	(lbs)	(%)	(lbs)	(%)	(lbs)	(%)
1	2007	-23022.1	0.0	24998.7	-25855.6	0.0	25165.5	2833.5	12.3	-	-	166.8	0.7
2	2007	-44517.1	0.0	-18987.2	-46074.5	0.0	-16235.7	1557.4	3.5	-	-	2751.5	14.5
3	2007	0.0	0.0	-50963.9	0.0	0.0	-51525.5	-	-	-	-	561.6	1.1
4	2007	0.0	0.0	-52601.5	0.0	0.0	-52870.2	-	-	-	-	268.7	0.5
5	2007	0.0	-30016.8	0.0	0.0	-26644.8	0.0	-	-	3372.0	11.2	-	-
1	2020	-46318.3	0.0	-9221.9	-48943.8	0.0	-7096.2	2625.5	5.7	-	-	2125.7	23.1
2	2020	-21294.4	0.0	14536.4	-24762.2	0.0	14444.1	3467.8	16.3	-	-	92.3	0.6
3	2020	0.0	0.0	-64690.1	0.0	0.0	-65640.4	-	-	-	-	950.2	1.5
4	2020	0.0	0.0	-38284.1	0.0	0.0	-40059.6	-	-	-	-	1775.5	4.6
5	2020	0.0	30050.1	0.0	0.0	26338.8	0.0	-	-	3711.3	12.4	-	-
1	2031	-31721.7	0.0	52678.6	-34537.0	0.0	52560.2	2815.4	8.9	-	-	118.4	0.2
2	2031	-35779.5	0.0	51437.9	-37423.0	0.0	53992.8	1643.5	4.6	-	-	2554.9	5.0
3	2031	0.0	0.0	-4265.5	0.0	0.0	-4958.0	-	-	-	-	692.5	16.2
4	2031	0.0	0.0	-2350.5	0.0	0.0	-2962.5	-	-	-	-	612.0	26.0
5	2031	0.0	30000.0	0.0	0.0	33301.0	0.0	-	-	3301.0	11.0	-	-
1	2033	46162.7	0.0	-40520.5	50195.4	0.0	-40436.9	4032.7	8.736	-	-	83.64	0.2064
2	2033	21331.3	0.0	-63484.9	24181.1	0.0	-66210.5	2849.8	13.36	-	-	2725.54	4.2932
3	2033	0.0	0.0	-7832.5	0.0	0.0	-6766.0	-	-	-	-	1066.53	13.617
4	2033	0.0	0.0	14343.8	0.0	0.0	15555.8	-	-	-	-	1212.02	8.4498
5	2033	0.0	-29997.8	0.0	0.0	-33254.1	0.0	-	-	3256.3	10.855	-	-

Table 1: Check of the Trunnion Loads

4. Load and Constraint:

The entire AMS-02 math model is constrained at five Trunnion locations whose GRID IDs are 1 and 2 with DOF(13), 3 and 4 with DOF(3), and 5 with DOF(2).

All 192 load cases under the launch and landing situations were investigated in order to indentify the worst result.

5. Result:

Material Properties : 7050-T7452 AL, AMS 4108 Hand Forging)

$F_{tu} := 66 \cdot 10^3 \cdot psi$

$F_{ty} := 54 \cdot 10^3 \cdot psi$

$F_{su} := 41 \cdot 10^3 \cdot psi$

(MIL-HDBK-5H, Table 3.7.3.0(d), t = 4.001"-5.000")
conservatively using ST values

Factor of Safety, $FS_u := 1.4$ $FS_y := 1.1$

Temperature reduction factor at 140° F,

$\gamma_u := 0.92$ $\gamma_y := 0.98$ *(Ref. MIL-HDBK-5H, Figure 3.7.3.2.1)*

5. Result: *(Cont'd)*

ii. For Upper Flange:

Maximum Von-Mises, principal, and shear stresses are selected from 192 load cases for Upper Flange. NASPOST V.2.1 is used to sort out stresses within the load cases.

$\sigma_{uy} := 34937.03 \cdot psi$ *(Load Case 2020, Element 221528, See p. 1.1.3.1-10)*

$\sigma_{uu} := 35417.17 \cdot psi$ *(Load Case 2020, Element 221516, See p. 1.1.3.1-10)*

$\sigma_{us} := 20027.79 \cdot psi$ *(Load Case 2020, Element 221528, See p. 1.1.3.1-11)*

Margins of Safety,

yield $MS_y := \frac{F_{ty} \cdot \gamma_y}{FS_y \cdot \sigma_{uy}} - 1$ $MS_y = 0.38$

ultimate $MS_u := \frac{F_{tu} \cdot \gamma_u}{FS_u \cdot \sigma_{uu}} - 1$ $MS_u = 0.22$

shear $MS_s := \frac{F_{su} \cdot \gamma_u}{FS_u \cdot \sigma_{us}} - 1$ $MS_s = 0.35$

Prepared By	Name/Date V.Bulsara / 3-7-03	LOCKHEED MARTIN Science, Engineering, Analysis, & Test *Mechanical Systems Analysis Department*	File Name ocflg.mcd
Checked By	3/7/03		Drawing No. SDG391357779
Title:	**Analysis of Outer Cylinder Flanges**		

```
### $
### $SELECT HEXA-STRESSES,IDS = 220001 THRU 224608 502001 THRU 502364
###   SORT VAR = MAXABS(MAX-VONM),OPT=12
###   PRINT 64 84 94 74; NCASES = 500;
###   HEADING = 'UPPER OC FLANGES  VON-MISES STRESS'
```

01/16/2003 11:06 NASPOST 2.1 PAGE 23

+++ UPPER OC FLANGES : VON-MISES STRESS +++

ID	SUBCASE	MAX-VONM	MAX-MAX-PRIN	MAX-MIN-PRIN	MAX-MAX-SHR
221528*	**2020**	**3.493703E+04**	**8.041497E+03**	**3.472685E+04**	**2.002779E+04**
221516	2020	3.474432E+04	7.008274E+03	3.541717E+04	1.997332E+04
223076	2007	2.616376E+04	6.278782E+03	2.560313E+04	1.488867E+04
223088	2007	2.504982E+04	5.094770E+03	2.566494E+04	1.432277E+04
221406	2020	2.327116E+04	2.417852E+04	3.440007E+03	1.198635E+04
221430	2020	2.275204E+04	2.359848E+04	4.697250E+03	1.165554E+04
221454	2020	2.209498E+04	2.285919E+04	4.017681E+03	1.126583E+04

```
### SELECT HEXA-STRESSES;IDS = 220001 THRU 224608 502001 THRU 502384
###   SORT VAR = MAXABS(MAX-MAX-PRIN,MAX-MIN-PRIN);OPT=12
###   PRINT 64 84 94 74; NCASES = 500;
###   HEADING = ' UPPER OC FLANGES : PRINCIPAL STRESS '
```

01/16/2003 11:08 NASPOST 2.1 PAGE 1

+++ UPPER OC FLANGES : PRINCIPAL STRESS +++

221516*	**2020**	**3.474432E+04**	**7.008274E+03**	**3.541717E+04**	**1.997332E+04**
221528	2020	3.493703E+04	8.041497E+03	3.472685E+04	2.002779E+04
223088	2007	2.504982E+04	5.094770E+03	2.566494E+04	1.432277E+04
223076	2007	2.616376E+04	6.278782E+03	2.560313E+04	1.488867E+04
221406	2020	2.327116E+04	2.417852E+04	3.440007E+03	1.198635E+04
221430	2020	2.275204E+04	2.359848E+04	4.697250E+03	1.165554E+04
221405	2020	2.122979E+04	2.343961E+04	1.958747E+03	1.120915E+04

```
   ### $
   ### $SELECT HEXA-STRESSES,IDS = 220001 THRU 224608 502001 THRU 502384
   ###   SORT VAR = MAXABS(MAX-MAX-SHR);OPT=12
   ###   PRINT 64 84 94 74, NCASES = 500,
   ###   HEADING = 'UPPER OC FLANGES  SHEAR STRESS'
```

01/16/2003 11:08 NASPOST 2.1 PAGE 45

+++ UPPER OC FLANGES SHEAR STRESS +++

ID	SUBCASE	MAX-VONM	MAX-MAX-PRIN	MAX-MIN-PRIN	MAX-MAX-SHR
221528*	**2020**	**3.493703E+04**	**6.041497E+03**	**3.472685E+04**	**2.002779E+04**
221516	2020	3.474432E+04	7.008274E+03	3.541717E+04	1.997332E+04
223076	2007	2.616376E+04	6.278782E+03	2.560313E+04	1.488867E+04
223088	2007	2.504982E+04	5.094770E+03	2.566494E+04	1.432277E+04
224180	2031	2.197187E+04	4.806895E+03	2.177856E+04	1.243464E+04
224168	2031	2.141680E+04	4.401327E+03	2.173049E+04	1.229798E+04
221406	2020	2.327116E+04	2.417852E+04	3.440007E+03	1.198635E+04
221430	2020	2.275204E+04	2.359848E+04	4.697250E+03	1.165554E+04
221564	2031	2.055684E+04	5.397592E+03	1.898944E+04	1.145418E+04
221524	2020	2.158708E+04	1.329307E+04	2.165361E+04	1.141761E+04

5. Result: *(Cont'd)*

i. For Lower Flange:

Maximum Von-Mises, principal, and shear stresses are selected from 192 load cases for Lower Flange. NASPOST V.2.1 is used to sort out stresses within the load cases.

$\sigma_{ly} := 23795.52 \cdot psi$ *(Load Case 2031, Element ,203639, See p. 1.1.3.1-14)*

$\sigma_{lu} := 23719.90 \cdot psi$ *(Load Case 2031, Element 203650, See p. 1.1.3.1-15)*

$\sigma_{ls} := 12784.08 \cdot psi$ *(Load Case 2031,Element 203650,See p. 1.1.3.1-17)*

(Elements that had nodes connected in an RBE2 were not considered in the margin of safety calculation even if the stresses were higher)

Margins of Safety,

yield $MS_y := \frac{F_{ty} \cdot \gamma_y}{FS_y \cdot \sigma_{ly}} - 1$ $MS_y = 1.02$

ultimate $MS_u := \frac{F_{tu} \cdot \gamma_u}{FS_u \cdot \sigma_{lu}} - 1$ $MS_u = 0.83$

shear $MS_s := \frac{F_{su} \cdot \gamma_u}{FS_u \cdot \sigma_{ls}} - 1$ $MS_s = 1.11$

```
### $SELECT HEXA-STRESSES;IDS = 200001 THRU 204224 500001 THRU 500384
###  SORT VAR = MAXABS(MAX-VONM);OPT=12
###  PRINT 64 84 94 74; NCASES = 500;
###  HEADING = 'LOWER OC FLANGES : VON-MISES STRESS'

01/16/2003 11:06                    NASPOST 2.1                    PAGE  23
```

+++ LOWER OC FLANGES : VON-MISES STRESS +++

ID	SUBCASE	MAX-VONM	MAX-MAX-PRIN	MAX-MIN-PRIN	MAX-MAX-SHR
200565	2054	5.252897E+04	3.642125E+04	3.344998E+04	3.030804E+04
200576	2054	5.204498E+04	3.602076E+04	3.342571E+04	2.984149E+04
202688	2020	4.442433E+04	3.006864E+04	2.842301E+04	2.512462E+04
202677	2020	4.363042E+04	2.879242E+04	2.884843E+04	2.500107E+04
203656	2033	4.275092E+04	3.258023E+04	2.608946E+04	2.464605E+04
203645	2033	3.997870E+04	2.872865E+04	2.605331E+04	2.286175E+04
200587	2054	3.742119E+04	2.522786E+04	2.589486E+04	2.152450E+04
202699	2020	3.674054E+04	2.540598E+04	2.489717E+04	2.102843E+04
200554	2054	3.379265E+04	2.433578E+04	2.412444E+04	1.946206E+04
200488	2054	3.275089E+04	2.253505E+04	2.131338E+04	1.888514E+04
202666	2020	3.246491E+04	2.382522E+04	2.243046E+04	1.865164E+04
201544	2007	3.208967E+04	2.263987E+04	2.008864E+04	1.844316E+04
201533	2007	3.178836E+04	2.268984E+04	1.978718E+04	1.819990E+04
200477	2054	3.176228E+04	2.155438E+04	2.099245E+04	1.833320E+04
200586	2054	3.084178E+04	3.323880E+04	1.146592E+04	1.732052E+04
203634	2033	2.952035E+04	1.959666E+04	2.026353E+04	1.693318E+04
200532	2054	2.946760E+04	2.329695E+04	2.065508E+04	1.694560E+04
200575	2054	2.929932E+04	3.344756E+04	1.091673E+04	1.691504E+04
200543	2054	2.909336E+04	2.294798E+04	2.025309E+04	1.678920E+04
200510	2054	2.907565E+04	2.316307E+04	1.993271E+04	1.661432E+04
200521	2054	2.807056E+04	2.199269E+04	1.935112E+04	1.610978E+04
200564	2054	2.638270E+04	3.096100E+04	7.626938E+03	1.503997E+04
203633	2033	2.626353E+04	2.847498E+04	9.227407E+03	1.459710E+04

```
### $SELECT HEXA-STRESSES;IDS = 200001 THRU 204224 500001 THRU 500384
###  SORT VAR = MAXABS(MAX-VONM);OPT=12
###  PRINT 64 84 94 74; NCASES = 500;
###  HEADING = 'LOWER OC FLANGES : VON-MISES STRESS'
```

01/16/2003 11:06 NASPOST 2.1 PAGE 23

+++ LOWER OC FLANGES : VON-MISES STRESS +++

ID	SUBCASE	MAX-VONM	MAX-MAX-PRIN	MAX-MIN-PRIN	MAX-MAX-SHR
202687	2020	2.607685E+04	2.953535E+04	9.370791E+03	1.504760E+04
200499	2054	2.600186E+04	1.879616E+04	1.781922E+04	1.469914E+04
202644	2020	2.598206E+04	2.043304E+04	1.811165E+04	1.486721E+04
202698	2020	2.595119E+04	2.896686E+04	9.823248E+03	1.475481E+04
201522	2007	2.595074E+04	1.685986E+04	1.778342E+04	1.475516E+04
200553	2054	2.593309E+04	2.628437E+04	8.632547E+03	1.490047E+04
203644	2033	2.574404E+04	2.701389E+04	9.041308E+03	1.387207E+04
200556	2054	2.540124E+04	7.237628E+03	2.244021E+04	1.465104E+04
202655	2020	2.539805E+04	2.027049E+04	1.729466E+04	1.462643E+04
203733	2033	2.500588E+04	1.722904E+04	1.621880E+04	1.436771E+04
203667	2033	2.471149E+04	1.678834E+04	1.870363E+04	1.424178E+04
200466	2054	2.465549E+04	1.789778E+04	1.624085E+04	1.396173E+04
202676	2020	2.444086E+04	2.797945E+04	7.452435E+03	1.399852E+04
202622	2020	2.421987E+04	1.890973E+04	1.647192E+04	1.361041E+04
203689	2033	2.395584E+04	1.887530E+04	1.685288E+04	1.379962E+04
203744	2033	2.385228E+04	1.606695E+04	1.596814E+04	1.377112E+04
203639*	**2031**	**2.379552E+04**	**4.157151E+03**	**2.337267E+04**	**1.265365E+04**

Prepared By	Name/Date V.Bulsara / 3-7-03	LOCKHEED MARTIN	File Name ocflg.mcd
Checked By	[signature] 3/7/03	Science, Engineering, Analysis, & Test *Mechanical Systems Analysis Department*	Drawing No. SDG391357779

Title: **Analysis of Outer Cylinder Flanges**

```
### SELECT HEXA-STRESSES;IDS = 200001 THRU 204224 500001 THRU 500384
###   SORT VAR = MAXABS(MAX-MAX-PRIN,MAX-MIN-PRIN),OPT=12
###   PRINT 64 84 94 74; NCASES = 500,
###   HEADING = 'LOWER OC FLANGES . PRINCIPAL STRESS'
```

[illegible] NASPOST 2.1 PAGE 1

+++ LOWER OC FLANGES . PRINCIPAL STRESS +++

ID	SUBCASE	MAX-VONM	MAX-MAX-PRIN	MAX-MIN-PRIN	MAX-MAX-SHR
200565	2054	5.252897E+04	3.642125E+04	3.344998E+04	3.030804E+04
200576	2054	5.204498E+04	3.602076E+04	3.342571E+04	2.984149E+04
200575	2054	2.929932E+04	3.344756E+04	1.091673E+04	1.691504E+04
200586	2054	3.084178E+04	3.323880E+04	1.146592E+04	1.732052E+04
203656	2033	4.275092E+04	3.258023E+04	2.608946E+04	2.464605E+04
200564	2054	2.638270E+04	3.096100E+04	7.626938E+03	1.503997E+04
202688	2020	4.442433E+04	3.006864E+04	2.842301E+04	2.512462E+04
202687	2020	2.607685E+04	2.953535E+04	9.370791E+03	1.504760E+04
202698	2020	2.595119E+04	2.896686E+04	9.823248E+03	1.475481E+04
202677	2020	4.363042E+04	2.879242E+04	2.884843E+04	2.500107E+04
203645	2033	3.997870E+04	2.872865E+04	2.605331E+04	2.286175E+04
203633	2033	2.626353E+04	2.847498E+04	9.227407E+03	1.459710E+04
202676	2020	2.444086E+04	2.797945E+04	7.452435E+03	1.399852E+04
203644	2033	2.574404E+04	2.701389E+04	9.041308E+03	1.387207E+04
200553	2054	2.593309E+04	2.628437E+04	8.632547E+03	1.490047E+04
200587	2054	3.742119E+04	2.522786E+04	2.589486E+04	2.152450E+04
200567	2054	2.024449E+04	5.876217E+03	2.574405E+04	1.154544E+04
202699	2020	3.674054E+04	2.540598E+04	2.489717E+04	2.102843E+04
203655	2033	2.149364E+04	2.458584E+04	6.701732E+03	1.212542E+04
[illegible]	[illegible]	[illegible]	[illegible]	[illegible]	[illegible]
202679	2020	2.072837E+04	6.013503E+03	2.431830E+04	1.165005E+04
202666	2020	3.246491E+04	2.382522E+04	2.243046E+04	1.865164E+04
203650*	2031	2.375002E+04	4.885270E+03	2.371990E+04	1.278408E+04

```
   ### $SELECT HEXA-STRESSES;IDS = 200001 THRU 204224 500001 THRU 500384
   ###   SORT VAR = MAXABS(MAX-MAX-SHR);OPT=12
   ###   PRINT 64 84 94 74; NCASES = 500;
   ###   HEADING = 'LOWER OC FLANGES : SHEAR STRESS'
```

01/16/2003 11:06 NASPOST 2.1 PAGE 45

+++ LOWER OC FLANGES : SHEAR STRESS +++

ID	SUBCASE	MAX-VONM	MAX-MAX-PRIN	MAX-MIN-PRIN	MAX-MAX-SHR
200565	2054	5.252897E+04	3.642125E+04	3.344998E+04	3.030804E+04
200576	2054	5.204498E+04	3.602076E+04	3.342571E+04	2.984149E+04
202688	2020	4.442433E+04	3.006864E+04	2.842301E+04	2.512462E+04
202677	2020	4.363042E+04	2.879242E+04	2.884843E+04	2.500107E+04
203656	2033	4.275092E+04	3.258023E+04	2.608946E+04	2.464605E+04
203645	2033	3.997870E+04	2.872865E+04	2.605331E+04	2.286175E+04
200587	2054	3.742119E+04	2.522786E+04	2.589486E+04	2.152450E+04
202699	2020	3.674054E+04	2.540598E+04	2.489717E+04	2.102843E+04
200554	2054	3.379265E+04	2.433578E+04	2.412444E+04	1.946206E+04
200488	2054	3.275089E+04	2.253505E+04	2.131338E+04	1.888514E+04
202666	2020	3.246491E+04	2.382522E+04	2.243046E+04	1.865164E+04
201544	2007	3.208967E+04	2.263987E+04	2.008864E+04	1.844316E+04
200477	2054	3.176228E+04	2.155438E+04	2.099245E+04	1.833320E+04
201533	2007	3.178836E+04	2.268984E+04	1.978718E+04	1.819990E+04
200586	2054	3.084178E+04	3.323880E+04	1.146592E+04	1.732052E+04
200532	2054	2.946760E+04	2.329695E+04	2.065508E+04	1.694560E+04
203634	2033	2.952035E+04	1.959666E+04	2.026353E+04	1.693318E+04
200575	2054	2.929932E+04	3.344756E+04	1.091673E+04	1.691504E+04
200543	2054	2.909336E+04	2.294798E+04	2.025309E+04	1.678920E+04
200510	2054	2.907565E+04	2.316307E+04	1.993271E+04	1.661432E+04
200521	2054	2.807056E+04	2.199269E+04	1.935112E+04	1.610978E+04
202687	2020	2.607685E+04	2.953535E+04	9.370791E+03	1.504760E+04
200564	2054	2.638270E+04	3.096100E+04	7.626938E+03	1.503997E+04

```
### $SELECT HEXA-STRESSES;IDS = 200001 THRU 204224 500001 THRU 500384
###  SORT VAR = MAXABS(MAX-MAX-SHR);OPT=12
###  PRINT 64 84 94 74; NCASES = 500;
###  HEADING = 'LOWER OC FLANGES : SHEAR STRESS'
```

01/16/2003 11:06 NASPOST 2.1 PAGE 45

+++ LOWER OC FLANGES : SHEAR STRESS +++

ID	SUBCASE	MAX-VONM	MAX-MAX-PRIN	MAX-MIN-PRIN	MAX-MAX-SHR
200553	2054	2.593309E+04	2.628437E+04	8.632547E+03	1.490047E+04
202644	2020	2.598206E+04	2.043304E+04	1.811165E+04	1.486721E+04
201522	2007	2.595074E+04	1.685986E+04	1.778342E+04	1.475516E+04
202698	2020	2.595119E+04	2.896686E+04	9.823248E+03	1.475481E+04
200499	2054	2.600186E+04	1.879616E+04	1.781922E+04	1.469914E+04
200556	2054	2.540124E+04	7.237628E+03	2.244021E+04	1.465104E+04
202655	2020	2.539805E+04	2.027049E+04	1.729466E+04	1.462643E+04
203633	2033	2.626353E+04	2.847498E+04	9.227407E+03	1.459710E+04
203733	2033	2.500588E+04	1.722904E+04	1.621880E+04	1.436771E+04
203667	2033	2.471149E+04	1.678634E+04	1.870363E+04	1.424178E+04
202676	2020	2.444086E+04	2.797945E+04	7.452435E+03	1.399852E+04
200466	2054	2.465549E+04	1.789778E+04	1.624085E+04	1.398173E+04
203644	2033	2.574404E+04	2.701389E+04	9.041308E+03	1.387207E+04
203689	2033	2.395584E+04	1.887530E+04	1.685288E+04	1.379962E+04
203744	2033	2.385228E+04	1.606695E+04	1.596814E+04	1.377112E+04
202622	2020	2.421987E+04	1.890973E+04	1.647192E+04	1.361041E+04
203678	2033	2.349387E+04	1.837345E+04	1.637545E+04	1.356416E+04
202633	2020	2.348931E+04	1.822919E+04	1.555181E+04	1.320932E+04
202600	2020	2.293075E+04	1.667493E+04	1.562270E+04	1.300865E+04
202668	2020	2.248209E+04	6.458079E+03	1.974565E+04	1.297829E+04
202589	2020	2.288120E+04	1.469169E+04	1.513193E+04	1.289109E+04
200589	2054	2.273003E+04	1.019115E+04	2.114760E+04	1.284121E+04
203650*	2031	2.375002E+04	4.885270E+03	2.371990E+04	1.278408E+04

6.0 Fail Safe Analysis

i. For Lower Flange:

Maximum principal, and shear stresses are selected from load case 2054 for the Lower Flange. NASPOST V.2.1 is used to sort out stresses within the load case.

$\sigma_{flu} := 22272.47 \cdot psi$ *(Element 500053, See p. 1.1.3.1-19)*

$\sigma_{fls} := 11049.59 \cdot psi$ *(Element 500053,See p. 1.1.3.1-21)*

(Elements that had nodes connected in an RBE2 were not considered in the margin of safety calculation even if the stresses were higher)

$FS_F := 1.0$ Fail-Safe Factor of Safety

Margins of Safety,

ultimate $MS_u := \frac{F_{tu} \cdot \gamma_u}{FS_F \cdot \sigma_{flu}} - 1$ $MS_u = 1.73$

shear $MS_s := \frac{F_{su} \cdot \gamma_u}{FS_F \cdot \sigma_{fls}} - 1$ $MS_s = 2.41$

```
### FILES '/hsm/phoang/ams2/ocflg/200bgap/fail-safe/stress/fs2054s.pch'
### $
### SELECT HEXA-STRESSES; IDS = 200001 THRU 204224 500001 THRU 500384
###   SORT VAR = MAXABS(MAX-MAX-PRIN,MAX-MIN-PRIN); OPT=12
###   PRINT 64 84 94 74; NCASES = 500;
###   HEADING = ' LOWER OC FLANGES : PRINCIPAL STRESS '
```

02/28/2003 10:42 NASPOST 2.1 PAGE 1

+++ LOWER OC FLANGES : PRINCIPAL STRESS +++

ID	SUBCASE	MAX-VONM	MAX-MAX-PRIN	MAX-MIN-PRIN	MAX-MAX-SHR
200564	1	3.280614E+04	3.955928E+04	1.046790E+04	1.879105E+04
200565	1	5.344531E+04	3.870187E+04	3.423581E+04	3.062672E+04
200576	1	5.050783E+04	3.392227E+04	3.438762E+04	2.909913E+04
200553	1	3.204281E+04	3.166840E+04	1.042100E+04	1.825865E+04
200567	1	2.088258E+04	9.744732E+03	2.741712E+04	1.200356E+04
200510	1	3.068290E+04	2.446277E+04	2.138229E+04	1.764308E+04
200488	1	3.481814E+04	2.396408E+04	2.270478E+04	2.009593E+04
200542	1	2.240443E+04	2.379309E+04	8.488689E+03	1.268009E+04
200532	1	3.038220E+04	2.375550E+04	2.188900E+04	1.754114E+04
200543	1	3.060390E+04	2.371720E+04	2.157070E+04	1.766917E+04
200521	1	2.994203E+04	2.346015E+04	2.068312E+04	1.722204E+04
200531	1	2.331335E+04	2.309904E+04	8.691112E+03	1.340025E+04
200477	1	3.388654E+04	2.291718E+04	2.243639E+04	1.955467E+04
200575	1	2.481902E+04	2.278464E+04	1.204602E+04	1.410886E+04
500053	**1**	**1.941430E+04**	**2.227247E+04**	**1.154379E+04**	**1.104959E+04**

Prepared By	Name/Date V.Bulsara / 3-7-03	LOCKHEED MARTIN Science, Engineering, Analysis, & Test Mechanical Systems Analysis Department	File Name ocflg.mcd
Checked By	3/7/03		Drawing No. SDG391357779
Title:	**Analysis of Outer Cylinder Flanges**		

```
### $SELECT HEXA-STRESSES;IDS = 200001 THRU 204224 500001 THRU 500384
###  SORT VAR = MAXABS(MAX-MAX-SHR);OPT=12
###  PRINT 64 84 94 74; NCASES = 500;
###  HEADING = 'LOWER OC FLANGES : SHEAR STRESS'
```

02/28/2003 10:42 NASPOST 2.1 PAGE 45

+++ LOWER OC FLANGES : SHEAR STRESS +++

ID	SUBCASE	MAX-VONM	MAX-MAX-PRIN	MAX-MIN-PRIN	MAX-MAX-SHR
200565	1	5.344531E+04	3.870187E+04	3.423581E+04	3.062672E+04
200576	1	5.050783E+04	3.392227E+04	3.438762E+04	2.909913E+04
200554	1	3.489180E+04	2.287407E+04	2.532596E+04	2.014477E+04
200488	1	3.481814E+04	2.396408E+04	2.270478E+04	2.009593E+04
200477	1	3.388654E+04	2.291718E+04	2.243639E+04	1.955467E+04
200564	1	3.280614E+04	3.955928E+04	1.046790E+04	1.879105E+04
200553	1	3.204281E+04	3.166840E+04	1.042100E+04	1.825865E+04
200543	1	3.060390E+04	2.371720E+04	2.157070E+04	1.766917E+04
200510	1	3.068290E+04	2.446277E+04	2.138229E+04	1.764308E+04
200532	1	3.038220E+04	2.375550E+04	2.188900E+04	1.754114E+04
200521	1	2.994203E+04	2.346015E+04	2.068312E+04	1.722204E+04
200556	1	2.783718E+04	1.051189E+04	2.161789E+04	1.606489E+04
200499	1	2.795002E+04	2.031701E+04	1.911926E+04	1.585095E+04
200466	1	2.644368E+04	1.923128E+04	1.747753E+04	1.501975E+04
200575	1	2.481902E+04	2.278464E+04	1.204602E+04	1.410886E+04
200531	1	2.331335E+04	2.309904E+04	8.691112E+03	1.340025E+04
200545	1	2.291162E+04	5.108071E+03	2.134261E+04	1.322534E+04
200578	1	2.287424E+04	1.197537E+04	1.956099E+04	1.294261E+04
200534	1	2.210311E+04	8.886488E+03	1.920491E+04	1.275842E+04
200512	1	2.109798E+04	5.513182E+03	1.979762E+04	1.217957E+04
200567	1	2.088258E+04	9.744732E+03	2.741712E+04	1.200356E+04

Prepared By	Name/Date V.Bulsara / 3-7-03	LOCKHEED MARTIN Science, Engineering, Analysis, & Test *Mechanical Systems Analysis Department*	File Name ocflg.mcd
Checked By	3/7/03		Drawing No. SDG391357779
Title:	**Analysis of Outer Cylinder Flanges**		

+++ LOWER OC FLANGES : SHEAR STRESS +++

ID	SUBCASE	MAX-VONM	MAX-MAX-PRIN	MAX-MIN-PRIN	MAX-MAX-SHR
200509	1	2.044256E+04	1.978471E+04	7.861749E+03	1.165551E+04
200520	1	1.989474E+04	1.983169E+04	8.140453E+03	1.142788E+04
200501	1	1.991159E+04	6.016685E+03	1.679610E+04	1.140639E+04
200498	1	1.965703E+04	1.823604E+04	6.439982E+03	1.109403E+04
500053	**1**	**1.941430E+04**	**2.227247E+04**	**1.154379E+04**	**1.104959E+04**

ii. For Upper Flange:

Maximum principal, and shear stresses are selected from load case 2020 for the Upper Flange. NASPOST V.2.1 is used to sort out stresses within the load case.

$\sigma_{fuu} := 35909.54 \cdot psi$ *(Element 221516, See p. 1.1.3.1-23)*

$\sigma_{fus} := 20277.12 \cdot psi$ *(Element 500053,See p. 1.1.3.1-23)*

(Elements that had nodes connected in an RBE2 were not considered in the margin of safety calculation even if the stresses were higher)

Margins of Safety,

ultimate $MS_u := \frac{F_{tu} \cdot \gamma_u}{FS_F \cdot \sigma_{fuu}} - 1$ $MS_u = 0.69$

shear $MS_s := \frac{F_{su} \cdot \gamma_u}{FS_F \cdot \sigma_{fus}} - 1$ $MS_s = 0.86$

```
### FILES '/hsm/phoang/ams2/ocflg/200bgap/fail-safe/stress/fs2020s.pch'
### $
### SELECT HEXA-STRESSES;IDS = 220001 THRU 224608 502001 THRU 502384
###   SORT VAR = MAXABS(MAX-MAX-PRIN,MAX-MIN-PRIN);OPT=12
###   PRINT 64 84 94 74; NCASES = 500;
###   HEADING = ' UPPER OC FLANGES : PRINCIPAL STRESS '
```

02/28/2003 10:45 NASPOST 2.1 PAGE 1

+++ UPPER OC FLANGES : PRINCIPAL STRESS +++

ID	SUBCASE	MAX-VONM	MAX-MAX-PRIN	MAX-MIN-PRIN	MAX-MAX-SHR
221516	**1**	**3.525816E+04**	**7.147922E+03**	**3.590954E+04**	**2.027712E+04**
221528	1	3.529024E+04	8.142919E+03	3.513253E+04	2.025010E+04
221430	1	2.252616E+04	2.345527E+04	4.236198E+03	1.164311E+04
221454	1	2.246671E+04	2.319886E+04	4.100599E+03	1.154619E+04

```
### $SELECT HEXA-STRESSES;IDS = 220001 THRU 224608 502001 THRU 502384
###   SORT VAR = MAXABS(MAX-MAX-SHR);OPT=12
###   PRINT 64 84 94 74; NCASES = 500;
###   HEADING = 'UPPER OC FLANGES : SHEAR STRESS'
```

02/28/2003 10:45 NASPOST 2.1 PAGE 45

+++ UPPER OC FLANGES : SHEAR STRESS +++

ID	SUBCASE	MAX-VONM	MAX-MAX-PRIN	MAX-MIN-PRIN	MAX-MAX-SHR
221516	**1**	**3.525816E+04**	**7.147922E+03**	**3.590954E+04**	**2.027712E+04**
221528	1	3.529024E+04	8.142919E+03	3.513253E+04	2.025010E+04
221430	1	2.252616E+04	2.345527E+04	4.236198E+03	1.164311E+04
221454	1	2.246671E+04	2.319886E+04	4.100599E+03	1.154619E+04
221524	1	2.132104E+04	1.291519E+04	2.150968E+04	1.133327E+04

APPENDIX A

Details of Model Check

Prepared By	Name/Date V.Bulsara / 3-7-03	LOCKHEED MARTIN Science, Engineering, Analysis, & Test *Mechanical Systems Analysis Department*	File Name ocflg_A.mcd
Checked By	3/7/03		Drawing No. SDG391357779
Title:	**Analysis of Outer Cylinder Flanges**		

0

OUTPUT FROM WEIGHT CHECK

0 DEGREES OF FREEDOM SET = G

0 REFERENCE POINT = 0

M O

```
* 6.410790E+00  2.775558E-17 -2.168404E-18 -8.881784E-14  2.515319E+03 -2.577948E+00 *
* 2.775558E-17  6.410790E+00 -1.387779E-17 -2.515319E+03  5.684342E-14 -2.100329E+00 *
* -2.168404E-18 -1.387779E-17  6.410790E+00  2.577948E+00  2.100329E+00 -1.110223E-15 *
* -8.881784E-14 -2.515319E+03  2.577948E+00  9.973527E+05 -1.172493E+02  8.379405E+02 *
* 2.515319E+03  5.684342E-14  2.100329E+00 -1.172493E+02  9.969594E+05 -9.187751E+02 *
* -2.577948E+00 -2.100329E+00 -1.110223E-15  8.379405E+02 -9.187751E+02  1.394058E+04 *
```

S

```
* 1.000000E+00  0.000000E+00  0.000000E+00 *
* 0.000000E+00  1.000000E+00  0.000000E+00 *
* 0.000000E+00  0.000000E+00  1.000000E+00 *
```

DIRECTION MASS AXIS SYSTEM (S)	MASS	X-C.G.	Y-C.G.	Z-C.G.
X	6.410790E+00	-1.385443E-14	4.021265E-01	3.923571E+02
Y	6.410790E+00	-3.276241E-01	8.866835E-15	3.923571E+02
Z	6.410790E+00	-3.276241E-01	4.021265E-01	-1.731804E-16

I(S)

```
* 1.044806E+04  1.180939E+02 -1.386131E+01 *
* 1.180939E+02  1.005509E+04 -9.270132E+01 *
* -1.386131E+01 -9.270132E+01  1.393886E+04 *
```

I(Q)

```
* 1.394110E+04                  *
*          1.002013E+04          *
*                   1.048078E+04 *
```

Q

```
* -3.164162E-03  2.666602E-01  9.637854E-01 *
* -2.375237E-02  9.634983E-01 -2.666587E-01 *
* -9.997129E-01 -2.373593E-02  3.285144E-03 *
```

1 MODEL CHECK-OUT OF OC FLANGE AUGUST 2, 2002 MSC.NASTRAN
4/ 9/01 PAGE 10

0
0

*** USER INFORMATION MESSAGE 7570 (GPWG1D)
RESULTS OF RIGID BODY CHECKS OF MATRIX KGG (G-SET) FOLLOW:
PRINT RESULTS IN ALL SIX DIRECTIONS AGAINST THE LIMIT OF 1.000000E-02

DIRECTION	STRAIN ENERGY	PASS/FAIL
1	2.626147E-07	PASS
2	1.219635E-07	PASS
3	1.014317E-06	PASS
4	2.217866E-03	PASS
5	4.882478E-04	PASS
6	1.046322E-03	PASS

SOME POSSIBLE REASONS MAY LEAD TO THE FAILURE:
1. CELASI ELEMENTS CONNECTING TO ONLY ONE GRID POINT;
2. CELASI ELEMENTS CONNECTING TO NON-COINCIDENT POINTS;
3. CELASI ELEMENTS CONNECTING TO NON-COLINEAR DOF;
4. IMPROPERLY DEFINED DMIG MATRICES;

1 MODEL CHECK-OUT OF OC FLANGE AUGUST 2, 2002 MSC.NASTRAN
4/ 9/01 PAGE 11

0
0

*** USER INFORMATION MESSAGE 7570 (GPWG1D)
RESULTS OF RIGID BODY CHECKS OF MATRIX KNN (N-SET) FOLLOW:
PRINT RESULTS IN ALL SIX DIRECTIONS AGAINST THE LIMIT OF 1.000000E-02

DIRECTION	STRAIN ENERGY	PASS/FAIL
1	7.900753E-08	PASS
2	4.105746E-07	PASS
3	1.525903E-06	PASS
4	4.349769E-03	PASS
5	2.323911E-03	PASS
6	3.658452E-04	PASS

SOME POSSIBLE REASONS MAY LEAD TO THE FAILURE:
1. MULTIPOINT CONSTRAINT EQUATIONS WHICH DO NOT SATISFY RIGID-BODY MOTION;
2. RBE3 ELEMENTS FOR WHICH THE INDEPENDENT DEGREE-OF-FREEDOM CANNOT DESCRIBE
ALL POSSIBLE RIGID-BODY MOTIONS.

1 MODEL CHECK-OUT OF OC FLANGE AUGUST 2, 2002 MSC.NASTRAN 4/ 9/01
PAGE 1068

0
0

*** USER INFORMATION MESSAGE 7570 (GPWG1D)
RESULTS OF RIGID BODY CHECKS OF MATRIX KFF (F-SET) FOLLOW:
PRINT RESULTS IN ALL SIX DIRECTIONS AGAINST THE LIMIT OF 1.000000E-02

DIRECTION	STRAIN ENERGY	PASS/FAIL
1	7.900753E-08	PASS
2	4.105746E-07	PASS
3	1.525903E-06	PASS
4	4.349769E-03	PASS
5	2.323911E-03	PASS
6	3.658452E-04	PASS

SOME POSSIBLE REASONS MAY LEAD TO THE FAILURE:
1. CONSTRAINTS WHICH PREVENT RIGID-BODY MOTION.

APPENDIX B

Basis for Stiffness

Bolt stiffness:

$$k = \frac{24EI}{L^3 + L^2 x - Lx^2}$$

Where x is the distance between the end of the bolt and the interface between plates as shown below.

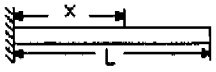

Derived from Bernoulli-Euler beam theory using the following assumptions:

1) Elongation of bolt due to shear deformation is small.
2) Total shear load in plates being joined is equal and opposite.
3) Shear load in plates being joined is in both cases constant throughout the thickness.
4) No rotation at either end of beam.

4/12/01

Minimum General Stability Margins for Outer Case (180 -360 deg) - Revised Thickness & Tolerance -

Panel	M.S.	Element Map																													
Thet/Sta	0.76	2.28	3.81	5.35	6.89	8.43	9.97	11.51	13.05	14.59	16.13	17.67	19.22	20.76	22.30	23.84	25.38	26.92	28.46	30.00	31.54	33.08	34.62	36.16	37.70	39.24	40.78	42.32	43.85	45.37	
181.406	8 48	5 84	4.51	3.64	3.81	3 67	3 81	3.84	4.02	4.01	4.12	4 02	4.09	3.97	4.04	3.96	3.86	3.78	3.65	3.63	3.55	3.53	3.54	3.48	3.52	3.49	3.47	4.25	6.15	6.46	
184.219	8.45	5 87	4 48	3 59	3.74	3.60	3 73	3.76	3.93	3.90	4.04	3.97	4.04	3.93	3.98	3.88	3.40	3.36	3.08	3.09	3.06	3.06	3.16	3 16	3 51	3.44	3.21	4.10	6.04	6.29	
187.031	8.35	5.92	4 49	3 58	3.71	3.56	3.68	3.69	3.83	3.80	3.91	3.86	3 73	3.60	3.12	3 06	2.68	2.68	2 46	2.50	2.51	2 59	2.72	2 82	3.27	3.30	3 35	3.44	6.15	3.21	
189.844	8 33	5 97	4 59	3 61	3 73	3.56	3 64	3.63	3.75	3.70	3.43	3.30	2 85	2.78	2.41	2 39	2.09	2.11	1 93	1.98	2 00	2 10	2.27	2 44	2.99	3.20	3.54	4.44	6.62	6.90	
192.656	8.41	6.11	4 80	3.73	3.79	3.57	3.62	3.59	3.12	3.04	2.60	2.55	2.20	2.18	1.88	1.88	1.63	1.54	1.49	1.52	1.53	1.60	1.73	1.88	2.39	2 72	3.95	4.67	7.62	8.26	
195.469	8.32	6.36	5 14	3.91	3.70	3.46	2.78	2.71	2.28	2.30	2.00	2.01	1.75	1.76	1.53	1.54	1.33	1.34	1.19	1.20	1.18	1.21	1.28	1.35	1.64	1 77	2.55	3.00	5.50	6.90	
198.281	8.05	4.36	3.42	3 19	2.40	2.36	1.96	2.01	1.75	1.83	1.63	1.67	1.48	1.52	1.33	1.36	1.16	1.17	1.02	1.01	0.95	0.89	0.86	0.81	0.96	0 96	1.36	1.48	2.51	3.27	
201.094	1.81	2.29	1.91	2.00	1.59	1.69	1.47	1.60	1.43	1.56	1.42	1.51	1.36	1.43	1.26	1.29	1.11	1.12	0.91	0.83	0.72	0.64	0.58	0.50	0.57	0.49	0.69	0.62	1.12	0.85	
203.906	1.30	1.31	1.17	1.39	1.17	1.35	1.23	1.41	1.29	1 45	1.35	1 48	1.36	1.45	1.29	1.31	1.07	1.00	0.80	0.72	0.61	0.52	0.45	0.36	0.38	0.28	0.38	0.26	0.55	0.70	
206.719	0.56	1.11	0.94	1.22	1.08	1.30	1.21	1.40	1 31	1 49	1.41	1 55	1.44	1.50	1.29	1.26	1.01	0.95	0.76	0.68	0.57	0.47	0.40	0.30	0.32	0.20	0.29	0.14	0.36	0.12	
209.531	1.15	1.23	1.22	1.50	1.30	1.51	1.40	1 61	1.51	1.70	1.60	1 86	1.47	1.46	1.23	1.20	0.96	0.89	0.70	0.63	0.55	0.48	0 42	0.35	0.39	0.30	0.42	0.30	0.58	0.43	
212.344	2.51	2.58	2.14	2.29	1.92	2 09	1 90	2 08	1.80	1.81	1.53	1 52	1.31	1.32	1.10	1.06	0.84	0.81	0.67	0.64	0.59	0.56	0 55	0.52	0.63	0.60	0.87	0.87	1.61	1.75	
215.156	4.00	4.15	3 70	3.24	2.45	1 97	1 89	1.87	1.56	1.55	1.32	1.34	1.13	1.12	0.92	0.92	0.76	0.77	0.67	0.68	0.68	0 71	0.77	0 82	1.04	1.04	1.46	1.54	2.69	3.20	
217.969	2.97	3.32	2.67	2.27	2.00	1 82	1.58	1.57	1.30	1.28	1.06	1.07	0 91	0.93	0.79	0 82	0.70	0.74	0 68	0.74	0.79	0.86	0.91	0 89	1.06	1.05	1 43	1.38	2.04	1.76	
220.781	2.14	2.14	1 72	1 77	1.36	1.42	1.13	1.15	0.94	0.97	0.82	0.86	0.74	0.79	0.68	0.74	0.65	0.72	0 69	0 78	0 86	0.94	0.95	0.93	1 09	1 03	1.34	1.25	1.88	1.76	
223.594	1 51	1 50	1.16	1.20	0 89	0 95	0 77	0.84	0.70	0.77	0.66	0.72	0.63	0.69	0.61	0.68	0 61	0.69	0 68	0.79	0.91	0 99	1.00	0 96	1.13	1.07	1 37	1.28	2.04	2.02	
226.406	0.71	0 80	0.65	0.77	0 59	0.70	0.58	0.67	0.57	0.65	0.56	0.64	0.56	0.63	0.56	0.64	0 57	0 66	0.65	0 76	0 87	1.00	1.05	1.06	1.21	1.23	1.41	1.54	2.43	2.65	
229.219	0.35	0 60	0 44	0 61	0 48	0.60	0.51	0.61	0.52	0.60	0 53	0.60	0.54	0.61	0.54	0.62	0.55	0 63	0.61	0.71	0.79	0.90	1.04	1.13	1.18	1.21	1.45	1.68	2.12	1.56	
232.031	0.49	0.75	0 56	0 72	0 55	0.67	0.55	0.65	0.55	0 63	0.55	0.62	0.55	0.62	0.55	0.62	0.54	0.61	0.58	0.65	0.70	0.77	0.86	0.91	1.14	1.16	1.53	1 50	2.38	1.15	
234.844	1.54	1.43	1.07	1.11	0 82	0.88	0.71	0.78	0 65	0 72	0.62	0 69	0.61	0.67	0.58	0.65	0.56	0.62	0.57	0.62	0.65	0.70	0.77	0.81	1.03	1.07	1.48	1.51	2.39	2.06	
237.656	3.13	2.64	1.88	1.74	1.24	1.23	0.98	1.01	0 84	0.89	0.76	0.82	0.71	0.77	0.66	0.71	0.61	0.66	0.59	0.63	0.65	0.69	0 73	0.73	0.88	0.85	1.16	1.19	2.33	1.88	
240.469	1.67	2.38	2.53	2.54	1.81	1.72	1.36	1 35	1.11	1 14	0.97	1 01	0 86	0 92	0.79	0 83	0.71	0.74	0.66	0.67	0.64	0.61	0 56	0.47	0.51	0.40	0.51	0.34	0.90	0.54	
243.281	1.51	1.92	1.84	2.37	1.96	1.72	1.79	1.80	1.49	1.49	1.27	1.29	1.12	1.14	0.99	1.01	0.86	0.87	0.74	0.70	0.60	0 52	0.46	0.37	0.40	0.29	0.38	0.23	0.73	0.56	
246.094	1.68	2.32	1.95	2.36	2.01	1.69	1.71	1.75	1.84	1.86	1.68	1.68	1.46	1.47	1.26	1.26	1.05	0.98	0.78	0.71	0.61	0.54	0.49	0.41	0.47	0.38	0.56	0.48	1.07	0.75	
248.906	2.75	3.20	3.03	3.07	2.32	1 92	1 88	1.87	1.92	1.90	1.94	1.92	1.80	1.79	1.53	1 44	1.15	1.08	0.87	0.80	0.72	0 86	0.62	0 58	0 69	0 68	1.01	0.99	1.51	1.27	
251.719	5.86	5.38	4 60	3.58	2.82	2.36	2.26	2.19	2.20	2.12	2.13	2.07	2.10	2.06	1.73	1 64	1.34	1.26	1 06	1.00	0 92	0 88	0.87	0 86	1.05	1 11	1.63	1.73	2.84	2 90	
254.531	6.99	6 68	5.45	3 99	3.41	2 90	2 78	2.66	2.56	2.51	2.32	2.38	2.18	2.25	2.01	1.95	1 63	1.56	1 35	1.30	1 24	1.22	1.25	1.27	1.53	1.61	2.21	2.42	3.87	4 40	
257.344	8 74	7.59	5.96	4.17	3.73	3.39	3.37	3.25	2.82	2.78	2.44	2.45	2.20	2.23	2.02	2.08	1 90	1 90	1 74	1 73	1 70	1.72	1.78	1.81	2.13	2 18	2 77	2.70	3.78	3.86	
260.156	7.46	7 85	6 09	4 20	3 82	3.52	3 60	3.62	3.15	3.07	2.68	2.64	2.35	2.35	2.11	2.14	1.94	2.00	1.89	1.96	2.01	2.10	2.19	2.24	2.53	2.53	2.96	2.72	3.22	2.82	
262.969	5.89	6.16	5.32	4.30	3 98	3.67	3.79	3.83	3.51	3.42	2 99	2.93	2.59	2.57	2.29	2.30	2.07	2.10	1.96	2.00	2.02	2.06	2.14	2.17	2.44	2.42	2.87	2.74	3.50	3.50	
265.781	6.65	6.97	6.20	4.54	4.20	3.88	4.00	4 06	3 97	3 78	3.33	3.26	2.89	2.85	2.53	2.51	2.24	2.25	2.07	2.08	2.06	2.06	2.09	2.06	2.26	2.18	2.55	2 36	3.13	3.24	
268.594	6.72	7.54	7.09	4.76	4.48	4.13	4.27	4 33	4 18	4.10	3.64	3.57	3.18	3.12	2.78	2.74	2.44	2.41	2.21	2.19	2.13	2.10	2.09	2.04	2.22	2.13	2.46	2.26	2.92	2.65	
271.406	8.00	8.54	8.31	4.99	4.61	4.24	4.45	4 51	4 41	4 34	3.88	3 81	3.41	3 35	2.98	2.94	2.61	2.57	2.34	2.30	2.22	2 18	2.17	2.12	2.32	2.29	2.75	2.77	3 78	3.87	
274.219	5.57	6.48	6.33	4.97	4.59	4.17	4.29	4.34	4 38	4.34	3.85	3 81	3.42	3.41	3.07	3.05	2.72	2.68	2.44	2.40	2.33	2.29	2.29	2.27	2.52	2.54	3.16	3.42	5.22	4.51	
277.031	5.45	6.27	5.91	4.87	4.44	4.04	4.16	4.20	4.01	3.96	3.50	3 47	3.11	3.11	2 80	2.83	2.58	2.61	2.40	2.39	2.36	2.37	2.43	2.44	2.72	2.74	3.30	3.26	4.19	3.55	
279.844	7.59	7.06	6.21	4.69	4.25	3 85	3.90	3 87	3.70	3.65	3.22	3.20	2 87	2.89	2.60	2 64	2.40	2.44	2.25	2.26	2.25	2.28	2 37	2.43	2.79	2.86	3.47	3.43	4.30	4.24	
282.656	5.98	6.24	5.72	4.58	4.04	3 80	3.55	3.45	3.20	3.18	2.81	2.85	2.57	2.63	2.39	2.45	2.21	2.19	2.01	1.98	1.88	1.87	1.89	1.91	2.25	2.36	3.11	3.23	4.13	4.23	
285.469	5.46	5.41	4.64	4.38	3.72	3.19	3.08	2.95	2.64	2.70	2.43	2.52	2.28	2.24	1.95	1 91	1.66	1.59	1.35	1.28	1.20	1.15	1.14	1.12	1.33	1.38	1.89	2.03	3.21	3 25	
288.281	4.48	4.12	3.44	3.56	2.78	2.66	2.40	2.47	2.24	2.31	2.00	1.97	1.70	1.68	1.44	1 41	1.16	1.09	0 90	0 84	0 75	0.70	0.67	0 62	0.74	0.71	1.01	1.04	1.96	2.26	
291.094	1.92	2.35	2.22	2.38	1.98	2.17	1 98	2.07	1.74	1.73	1.47	1.45	1.24	1.23	1.03	1.03	0 81	0.76	0.59	0 54	0 47	0 42	0.38	0.32	0 38	0 31	0.47	0.39	0.77	0.69	
293.906	1.27	1.57	1 49	1 81	1.63	1.92	1 57	1.56	1.28	1.27	1.06	1.06	0.89	0.89	0.74	0.74	0.57	0.53	0.39	0.35	0.29	0.25	0.22	0.16	0.21	0.13	0.24	0.13	0.39	0.21	
296.719	1.31	1.66	1.47	1.86	1.59	1.53	1 19	1.16	0.92	0.92	0.75	0.78	0.63	0.64	0.51	0.52	0.40	0 37	0.26	0.23	0.19	0.16	0.14	0.10	0.16	0.11	0.23	0.15	0.43	0.58	
299.531	1 64	2 05	2 08	1 82	1.23	1.15	0.86	0.84	0.64	0.66	0.52	0.54	0.43	0.45	0.34	0.36	0.26	0.27	0.17	0.16	0.13	0.12	0.12	0.10	0.20	0.18	0.39	0.38	0.85	0.70	
302.344	2.23	1 98	1.37	1.24	0.82	0.79	0.57	0.58	0.42	0.45	0.34	0.37	0.28	0.31	0.23	0.26	0.18	0.21	0.13	0.12	0.11	0.11	0.13	0.14	0.27	0.30	0.62	0.76	1.63	2.12	
305.156	1.02	0.96	0.67	0 69	0 44	0.47	0.33	0.37	0.25	0.25	0.21	0.25	0.18	0.22	0.16	0.20	0.13	0.17	0.11	0.11	0.11	0.12	0.15	0.17	0.33	0.38	0.72	0.85	1.81	2.17	
307.969	0.21	0.38	0.24	0.34	0.20	0.27	0.17	0.23	0.15	0.20	0.13	0.18	0.13	0.17	0.12	0.16	0.11	0.15	0.12	0.13	0.13	0.15	0.19	0.21	0.37	0.40	0.70	0.74	1.36	1.22	
310.781	0.10	0.26	0.10	0.21	0.10	0.18	0.10	0.17	0.10	0.16	0.10	0.16	0.10	0.16	0.10	0.16	0.11	0.18	0.15	0.17	0.18	0.20	0.24	0.27	0.42	0.44	0.73	0.74	1.39	1.41	
313.594	0.26	0.31	0.18	0.26	0.12	0.20	0.12	0.19	0.11	0.17	0.11	0.17	0.12	0.17	0.11	0.17	0.12	0.18	0.17	0.23	0.24	0.27	0 32	0.34	0.50	0.53	0.84	0.86	1 58	1.59	
316.406	0.63	0.63	0.42	0.47	0.27	0.33	0.22	0.28	0.19	0.24	0.17	0.22	0.16	0.21	0.15	0.20	0.15	0.21	0.19	0.26	0.32	0.36	0.42	0.46	0.64	0.67	1.03	1.08	1 92	1.98	
319.219	1.23	1.19	0.87	0.88	0.58	0.60	0.43	0.46	0.33	0.37	0.28	0.32	0.24	0.26	0.21	0.26	0.19	0.23	0.20	0.25	0.30	0.36	0 46	0.55	0.80	0.86	1.26	1.33	2.25	2.30	
322.031	2.26	2.23	1.69	1.60	1.10	1.05	0.77	0.76	0.57	0.58	0.44	0.46	0.35	0.38	0.28	0 31	0.22	0.25	0.20	0.23	0.25	0.29	0.35	0.40	0.61	0.71	1.16	1.34	2.50	2.23	
324.844	3.98	3.76	2.97	2.73	1.86	1.67	1.23	1.15	0.86	0.84	0.65	0.65	0.51	0.51	0.39	0 40	0.28	0.30	0.22	0.23	0.22	0.24	0.27	0.28	0.44	0.46	0.84	0.98	2.01	2.52	
327.656	2.59	2.65	2.05	2.05	1.60	1 67	1.42	1.40	1.12	1.10	0.87	0.85	0.67	0.66	0.51	0.50	0.36	0.36	0.26	0.26	0.23	0.22	0.22	0.20	0.31	0.30	0.54	0.59	1.32	1.72	
330.469	1.20	1.41	1.22	1.47	1.21	1 35	1 18	1.30	1.15	1.24	1.03	1.04	0.86	0.86	0.67	0.64	0.48	0.46	0.34	0 32	0.27	0.24	0.23	0 19	0.25	0.20	0 35	0.28	0.61	0.45	
333.281	0.56	1.10	0.91	1.19	1.03	1.24	1.11	1.25	1.11	1.21	1.09	1.17	1.02	1.02	0.84	0.83	0.65	0.62	0.48	0 44	0.36	0.34	0.31	0.26	0.32	0.25	0.37	0.23	0.46	0.21	
336.094	1.22	1.41	1.11	1.33	1.12	1.30	1.17	1.32	1.19	1.29	1.16	1.24	1.11	1.16	1.01	1.03	0.83	0.80	0.65	0.62	0.56	0.52	0.50	0.45	0.54	0.47	0.84	0.51	0.87	0.99	
338.906	1.62	2.17	1.79	1 91	1.51	1.62	1.40	1.52	1.35	1.46	1.32	1.41	1.26	1.31	1.15	1.19	1.02	1.05	0.90	0.87	0.81	0.78	0.77	0.74	0.89	0.84	1.12	1.10	1.82	1.60	
341.719	4.96	4.18	3.32	3 10	2 32	2.28	1.88	1.93	1.66	1.74	1.55	1.63	1.47	1.53	1.37	1.42	1.25	1.28	1.15	1.18	1.18	1.16	1.17	1.16	1.37	1.40	1.90	2.04	3.30	4.03	
344.531	7.08	5.74	5.10	4.08	3 67	3.39	2.70	2.63	2.20	2.22	1.94	2.00	1.80	1.85	1.64	1.69	1.51	1.56	1.45	1.52	1.54	1.60	1.69	1.73	2.07	2.19	2.96	3 15	4.68	4.35	
347.344	7.63	5 77	4 86	3 88	4 02	3.82	3.91	3.73	3.06	2.99	2.58	2.58	2.29	2.33	2.09	2.14	1.91	1.96	1.83	1.91	1.97	2.08	2.26	2.44	3.00	3.29	4.44	4 99	7.80	7.29	
350.156	7.70	5.87	4 69	3.77	3 97	3.83	3.95	3.93	3.99	3.83	3.27	3.20	2.80	2.79	2.46	2.48	2.21	2.25	2.11	2.20	2.27	2.41	2.65	2.91	3.67	4.07	4.23	5.74	10 52	13.05	
352.969	7.74	5 86	4.58	3.60	3.78	3.68	3.83	3.84	3.98	3.91	3.90	3.83	3.37	3.34	2.95	2.96	2.64	2.68	2.50	2.58	2.63	2.76	2.97	3.16	3.77	3.82	3.91	5.12	8 17	8.83	
355.781	7.89	5.83	4 42	3.53	3.68	3.57	3.72	3.76	3 91	3.86	3.96	3.87	3.94	3.84	3.54	3.54	3.15	3.17	2.94	2.99	3.00	3.07	3.20	3.26	3.55	3.55	3.56	4.41	6 16	5.61	
358.594	8.15	5.80	4.33	3.49	3.66	3.53	3.67	3.70	3 85	3 82	3.93	3.85	3.93	3.84	3.91	3.87	3.62	3.62	3.33	3.35	3.30	3.30	3.35	3.30	1.62	1.67	1.64	2.02	3.18	5.92	
was min t	0.250	0.250	0.230	0.230	0.210	0.210	0.200	0.200	0.190	0.190	0.180	0.180	0.170	0.170	0.160	0.160	0.160	0.160	0.150	0.150	0.150	0.150	0.150	0.150	0.160	0.160	0.170	0.170	0.190	0.190	+/-0.010
now min t	0.247	0.247	0.230	0.230	0.210	0.210	0 196	0.196	0.185	0.185	0.176	0.176	0.168	0.168	0.160	0.160	0.153	0.153	0.148	0.148	0.147	0.147	0.148	0.148	0.155	0.155	0.169	0.169	0.196	0.196	+/-0.005

Minimum General Stability Margins for Outer Case (0 -180 deg) - Revised Thickness & Tolerance -

Panel M.S. Element Map

Thet/Sta	0.76	2.28	3.81	5.35	6.89	8.43	9.97	11.51	13.05	14.59	16.13	17.67	19.22	20.76	22.30	23.84	25.38	26.92	28.46	30.00	31.54	33.08	34.62	36.16	37.70	39.24	40.78	42.32	43.85	45.37	
1.406	8.01	5.80	4.34	3.47	3.61	3.48	3.62	3.65	3.80	3.76	3.86	3.78	3.85	3.76	3.83	3.79	3.57	3.57	3.28	3.30	3.25	3.24	1.55	1.58	1.63	1.68	1.64	2.01	3.20	6.03	
4.219	7.75	5.80	4.43	3.49	3.62	3.50	3.64	3.66	3.79	3.74	3.82	3.72	3.77	3.67	3.41	3.40	3.02	3.04	2.82	2.86	2.86	2.91	3.01	3.03	3.26	3.19	1.65	3.79	5.81	6.04	
7.031	7.59	5.82	4.61	3.59	3.72	3.59	3.71	3.70	3.81	3.73	3.77	3.66	3.22	3.19	2.80	2.81	2.49	2.53	2.35	2.42	2.47	2.57	2.75	2.88	3.33	3.28	3.19	3.98	6.02	6.08	
9.844	7.50	5.83	4.74	3.75	3.90	3.70	3.77	3.73	3.80	3.89	3.16	3.08	2.67	2.65	2.32	2.34	2.07	2.12	1.98	2.06	2.12	2.25	2.48	2.70	3.37	3.50	3.50	4.56	6.81	6.71	
12.656	7.37	5.76	4.92	3.86	3.90	3.66	3.70	3.61	2.95	2.87	2.46	2.46	2.18	2.22	1.97	2.01	1.79	1.85	1.73	1.80	1.86	1.98	2.17	2.35	2.93	3.26	3.89	5.11	7.84	8.60	
15.469	5.66	5.90	5.08	4.04	3.69	3.37	2.67	2.58	2.15	2.16	1.88	1.93	1.72	1.76	1.56	1.60	1.42	1.47	1.36	1.41	1.43	1.48	1.54	1.58	1.91	2.04	2.84	3.21	5.29	5.66	
18.281	5.68	4.38	3.46	3.18	2.36	2.30	1.89	1.92	1.65	1.72	1.52	1.59	1.44	1.50	1.32	1.37	1.19	1.22	1.09	1.11	1.07	1.03	1.03	1.01	1.20	1.22	1.68	1.84	3.06	4.04	
21.094	1.62	2.32	1.82	1.94	1.54	1.65	1.43	1.54	1.37	1.48	1.34	1.41	1.26	1.32	1.16	1.19	1.03	1.04	0.86	0.82	0.75	0.70	0.68	0.64	0.75	0.70	0.96	0.91	1.53	1.27	
23.906	1.24	1.41	1.12	1.36	1.16	1.35	1.22	1.38	1.23	1.35	1.22	1.31	1.18	1.24	1.06	1.09	0.88	0.84	0.67	0.63	0.56	0.50	0.46	0.40	0.46	0.39	0.55	0.44	0.77	0.93	
26.719	0.57	1.12	0.95	1.25	1.11	1.32	1.19	1.34	1.21	1.34	1.22	1.32	1.18	1.18	0.98	0.96	0.75	0.71	0.55	0.49	0.42	0.37	0.33	0.26	0.31	0.23	0.35	0.21	0.45	0.18	
29.531	1.27	1.46	1.35	1.51	1.34	1.51	1.35	1.50	1.35	1.48	1.29	1.29	1.10	1.08	0.86	0.83	0.64	0.60	0.47	0.43	0.37	0.33	0.30	0.24	0.30	0.23	0.36	0.27	0.57	0.44	
32.344	2.97	3.08	2.41	2.40	1.91	2.00	1.75	1.83	1.49	1.48	1.20	1.16	0.95	0.93	0.74	0.73	0.57	0.56	0.44	0.43	0.39	0.37	0.36	0.34	0.43	0.40	0.61	0.58	1.14	1.15	
35.156	3.49	4.11	3.70	3.07	2.27	1.91	1.73	1.61	1.25	1.21	0.98	0.98	0.81	0.81	0.66	0.67	0.54	0.55	0.46	0.47	0.47	0.48	0.52	0.54	0.73	0.78	1.19	1.33	2.33	2.72	
37.969	1.78	2.56	2.11	2.06	1.51	1.46	1.14	1.13	0.90	0.92	0.75	0.78	0.65	0.69	0.57	0.61	0.51	0.55	0.49	0.54	0.58	0.65	0.75	0.86	1.21	1.45	1.70	1.85	1.52	1.38	
40.781	0.99	1.16	0.98	1.09	0.82	0.88	0.71	0.77	0.63	0.68	0.58	0.64	0.55	0.60	0.52	0.58	0.50	0.58	0.55	0.64	0.72	0.85	1.05	1.27	1.42	1.48	1.47	1.70	2.17	2.49	
43.594	0.83	0.83	0.61	0.70	0.49	0.58	0.47	0.55	0.45	0.53	0.45	0.52	0.45	0.53	0.46	0.54	0.49	0.58	0.58	0.70	0.83	0.97	1.08	1.16	1.36	1.40	1.57	1.96	2.90	4.73	
46.406	0.54	0.58	0.43	0.53	0.36	0.45	0.36	0.45	0.37	0.45	0.38	0.46	0.40	0.48	0.42	0.50	0.45	0.55	0.56	0.68	0.72	0.78	0.87	0.94	1.21	1.28	1.51	1.90	3.08	3.17	
49.219	0.38	0.57	0.38	0.51	0.36	0.46	0.36	0.45	0.36	0.44	0.37	0.44	0.38	0.46	0.40	0.48	0.43	0.51	0.51	0.56	0.58	0.62	0.68	0.73	0.96	1.01	1.43	1.46	2.39	2.20	
52.031	0.56	0.65	0.58	0.70	0.50	0.58	0.46	0.53	0.42	0.49	0.41	0.47	0.40	0.47	0.40	0.47	0.41	0.48	0.44	0.46	0.46	0.48	0.53	0.57	0.77	0.82	1.23	1.31	2.24	2.07	
54.844	1.80	1.60	1.16	1.15	0.81	0.84	0.65	0.69	0.55	0.59	0.49	0.54	0.46	0.51	0.43	0.49	0.41	0.47	0.38	0.38	0.37	0.38	0.41	0.43	0.61	0.66	1.07	1.20	2.31	2.71	
57.656	3.86	2.95	2.04	1.82	1.26	1.21	0.93	0.93	0.74	0.76	0.63	0.67	0.56	0.60	0.50	0.54	0.44	0.48	0.36	0.34	0.31	0.31	0.32	0.31	0.45	0.47	0.79	0.89	1.76	2.26	
60.469	1.69	2.34	2.33	2.28	1.81	1.53	1.19	1.18	0.95	0.96	0.80	0.82	0.70	0.73	0.60	0.62	0.50	0.49	0.36	0.34	0.29	0.26	0.25	0.22	0.31	0.28	0.49	0.46	0.94	0.78	
63.281	1.44	1.79	1.83	2.07	1.85	1.70	1.47	1.46	1.20	1.20	1.01	1.02	0.87	0.88	0.74	0.75	0.59	0.55	0.41	0.37	0.31	0.26	0.23	0.18	0.23	0.18	0.29	0.20	0.51	0.67	
66.094	1.41	2.02	1.69	2.05	1.86	1.76	1.75	1.75	1.51	1.51	1.28	1.29	1.10	1.10	0.92	0.93	0.72	0.67	0.50	0.45	0.36	0.32	0.28	0.21	0.25	0.17	0.28	0.16	0.42	0.22	
68.906	2.08	2.51	2.49	2.72	2.23	2.05	1.98	1.93	1.90	1.91	1.64	1.63	1.41	1.40	1.19	1.17	0.91	0.84	0.66	0.60	0.51	0.45	0.41	0.34	0.40	0.33	0.48	0.40	0.76	0.65	
71.719	4.48	4.21	3.57	3.72	3.01	2.53	2.40	2.29	2.28	2.18	2.10	2.07	1.82	1.79	1.54	1.48	1.19	1.11	0.90	0.83	0.75	0.69	0.65	0.60	0.71	0.68	0.98	1.01	1.90	2.21	
74.531	6.26	6.13	5.16	4.57	3.80	3.11	2.95	2.79	2.56	2.59	2.31	2.37	2.16	2.22	2.01	1.92	1.58	1.50	1.27	1.20	1.12	1.07	1.06	1.04	1.24	1.28	1.74	1.85	2.90	2.94	
77.344	8.05	7.56	6.20	5.05	4.24	3.60	3.49	3.35	2.96	2.91	2.56	2.57	2.32	2.35	2.13	2.18	1.98	2.02	1.79	1.75	1.68	1.66	1.69	1.71	2.02	2.11	2.70	2.71	3.35	3.28	
80.156	5.90	7.41	6.55	5.03	4.45	3.92	3.78	3.69	3.18	3.13	2.76	2.74	2.46	2.47	2.22	2.26	2.06	2.11	2.00	2.06	2.10	2.18	2.29	2.40	2.77	2.92	3.39	3.68	4.82	4.77	
82.969	6.06	4.33	5.75	4.65	4.43	4.04	3.89	3.85	3.38	3.35	2.97	2.95	2.66	2.65	2.41	2.45	2.24	2.30	2.20	2.26	2.35	2.47	2.64	2.67	3.01	3.00	3.29	3.64	5.05	5.13	
85.781	6.22	6.12	5.28	4.26	4.20	4.01	4.04	4.06	3.63	3.62	3.25	3.25	2.94	2.95	2.68	2.72	2.51	2.57	2.47	2.57	2.65	2.70	2.70	2.65	2.90	2.85	3.29	3.39	4.70	4.78	
88.594	6.82	6.50	5.00	3.89	3.99	3.92	4.18	4.24	3.93	3.95	3.58	3.58	3.27	3.28	2.99	3.03	2.80	2.86	2.75	2.83	2.74	2.69	2.69	2.63	2.88	2.82	3.30	3.30	4.57	4.61	
91.406	6.86	6.75	4.68	3.66	3.86	3.81	4.05	4.15	4.25	4.27	3.89	3.90	3.57	3.58	3.28	3.31	3.05	3.05	2.79	2.77	2.71	2.69	2.70	2.67	2.93	2.86	3.26	3.25	4.33	4.55	
94.219	6.75	6.74	4.52	3.52	3.70	3.64	3.86	3.96	4.17	4.17	4.12	4.11	3.68	3.61	3.20	3.17	2.83	2.84	2.63	2.86	2.64	2.66	2.72	2.72	3.01	2.96	3.25	3.31	4.29	4.25	
97.031	6.90	6.85	4.57	3.51	3.65	3.58	3.75	3.82	4.01	3.98	3.60	3.55	3.15	3.13	2.80	2.82	2.55	2.60	2.44	2.51	2.54	2.61	2.72	2.77	3.12	3.11	3.47	3.43	4.24	4.32	
99.844	7.36	7.17	4.85	3.64	3.72	3.58	3.72	3.75	3.46	3.42	3.00	3.00	2.69	2.72	2.46	2.52	2.31	2.39	2.27	2.37	2.43	2.52	2.59	2.62	2.93	2.89	3.38	3.11	3.78	2.65	
102.656	7.90	7.57	5.49	3.94	3.88	3.64	3.44	3.36	2.86	2.86	2.54	2.59	2.36	2.44	2.24	2.33	2.16	2.20	1.95	1.90	1.83	1.81	1.84	1.85	2.15	2.18	2.78	2.74	4.01	3.89	
105.469	7.05	6.71	5.25	4.26	3.52	3.33	2.78	2.78	2.41	2.49	2.26	2.37	2.20	2.31	2.15	2.07	1.72	1.64	1.41	1.35	1.28	1.25	1.26	1.26	1.51	1.57	2.14	2.29	3.64	3.97	
108.281	5.47	4.89	3.84	3.51	2.65	2.66	2.28	2.39	2.16	2.31	2.16	2.30	1.99	1.96	1.68	1.64	1.33	1.26	1.05	0.99	0.82	0.88	0.87	0.85	1.04	1.07	1.56	1.60	2.61	2.53	
111.094	2.28	2.75	2.31	2.44	2.01	2.20	2.01	2.21	2.06	2.04	1.75	1.73	1.48	1.47	1.24	1.22	1.02	1.01	0.82	0.77	0.69	0.64	0.61	0.57	0.69	0.67	0.99	0.92	1.45	1.26	
113.906	1.34	1.92	1.59	1.94	1.76	1.99	1.89	1.88	1.56	1.55	1.31	1.31	1.11	1.11	0.93	0.93	0.77	0.76	0.65	0.64	0.56	0.51	0.47	0.41	0.48	0.41	0.59	0.49	0.97	0.89	
116.719	1.36	1.74	1.60	2.06	1.91	1.85	1.48	1.46	1.19	1.19	0.99	1.00	0.84	0.86	0.71	0.72	0.59	0.60	0.51	0.51	0.49	0.46	0.42	0.38	0.41	0.32	0.44	0.30	0.84	0.62	
119.531	1.62	2.29	2.36	2.12	1.48	1.39	1.07	1.06	0.85	0.87	0.72	0.76	0.64	0.68	0.56	0.59	0.48	0.50	0.42	0.44	0.43	0.45	0.48	0.42	0.49	0.42	0.58	0.47	1.20	0.89	
122.344	2.08	1.89	1.37	1.29	0.90	0.90	0.69	0.73	0.58	0.62	0.52	0.57	0.48	0.53	0.44	0.48	0.40	0.44	0.39	0.42	0.43	0.46	0.52	0.56	0.75	0.75	1.06	1.15	2.12	1.95	
125.156	0.95	0.92	0.68	0.73	0.51	0.57	0.44	0.50	0.40	0.46	0.38	0.44	0.37	0.43	0.36	0.41	0.34	0.39	0.35	0.39	0.43	0.48	0.55	0.61	0.84	0.94	1.44	1.66	3.16	2.57	
127.969	0.20	0.42	0.27	0.40	0.27	0.37	0.29	0.37	0.29	0.37	0.30	0.37	0.31	0.37	0.31	0.37	0.30	0.36	0.33	0.39	0.44	0.51	0.60	0.67	0.91	0.98	1.42	1.48	2.28	1.24	
130.781	0.11	0.31	0.17	0.31	0.20	0.31	0.24	0.33	0.26	0.33	0.28	0.35	0.29	0.35	0.29	0.35	0.30	0.36	0.34	0.42	0.48	0.57	0.66	0.70	0.91	0.95	1.38	1.47	2.29	1.91	
133.594	0.39	0.45	0.33	0.43	0.28	0.37	0.29	0.37	0.29	0.36	0.30	0.36	0.30	0.36	0.30	0.37	0.31	0.38	0.36	0.45	0.52	0.61	0.64	0.65	0.81	0.80	1.11	1.10	1.89	1.95	
136.406	1.00	1.00	0.74	0.78	0.53	0.58	0.45	0.51	0.40	0.46	0.37	0.42	0.35	0.41	0.34	0.40	0.33	0.40	0.39	0.47	0.56	0.62	0.63	0.62	0.75	0.71	0.95	0.87	1.46	1.44	
139.219	1.60	1.60	1.24	1.27	0.92	0.95	0.74	0.76	0.58	0.61	0.49	0.53	0.44	0.48	0.40	0.45	0.38	0.44	0.41	0.49	0.56	0.61	0.63	0.63	0.76	0.70	0.92	0.81	1.31	1.31	
142.031	2.61	2.63	2.09	2.01	1.41	1.35	1.03	1.02	0.81	0.81	0.64	0.66	0.54	0.58	0.47	0.51	0.42	0.47	0.41	0.46	0.50	0.57	0.61	0.61	0.76	0.75	1.07	0.98	1.53	1.22	
144.844	3.53	3.52	2.92	2.78	1.97	1.82	1.38	1.33	1.04	1.04	0.85	0.85	0.69	0.70	0.57	0.59	0.48	0.51	0.42	0.44	0.43	0.46	0.50	0.54	0.74	0.78	1.14	1.22	2.22	2.83	
147.656	2.27	2.23	1.79	1.86	1.50	1.61	1.41	1.54	1.28	1.29	1.07	1.07	0.89	0.86	0.71	0.71	0.56	0.56	0.46	0.44	0.40	0.37	0.37	0.34	0.45	0.43	0.89	0.71	1.44	1.65	
150.469	0.89	1.06	1.03	1.26	1.08	1.27	1.15	1.31	1.20	1.34	1.22	1.25	1.08	1.10	0.88	0.86	0.67	0.65	0.51	0.47	0.40	0.35	0.30	0.24	0.29	0.21	0.34	0.24	0.53	0.40	
153.281	0.49	0.99	0.82	1.09	0.96	1.17	1.08	1.25	1.15	1.30	1.20	1.32	1.21	1.22	1.03	1.03	0.82	0.78	0.61	0.54	0.45	0.38	0.32	0.24	0.26	0.16	0.24	0.16	0.32	0.16	
156.094	1.26	1.46	1.13	1.35	1.13	1.32	1.19	1.36	1.24	1.37	1.26	1.37	1.26	1.33	1.17	1.16	0.94	0.89	0.70	0.63	0.54	0.46	0.40	0.32	0.35	0.25	0.36	0.24	0.52	0.66	
158.906	2.20	2.55	2.04	2.09	1.64	1.74	1.51	1.63	1.45	1.56	1.41	1.49	1.34	1.39	1.22	1.26	1.09	1.07	0.86	0.79	0.69	0.62	0.56	0.49	0.56	0.49	0.69	0.63	1.14	0.91	
161.719	6.04	4.78	3.61	3.36	2.53	2.49	2.06	2.10	1.81	1.89	1.67	1.71	1.51	1.54	1.34	1.37	1.18	1.19	1.06	1.03	0.94	0.86	0.86	0.81	0.96	0.96	1.36	1.47	2.48	3.22	
164.531	6.09	6.05	5.01	4.03	3.83	3.60	2.89	2.82	2.37	2.37	2.06	2.06	1.80	1.81	1.57	1.58	1.37	1.38	1.24	1.25	1.24	1.28	1.33	1.34	1.62	1.73	2.42	2.69	4.45	4.76	
167.344	6.67	6.02	4.88	3.91	3.99	3.78	3.87	3.81	3.15	3.07	2.65	2.60	2.26	2.23	1.94	1.94	1.68	1.69	1.54	1.57	1.58	1.65	1.78	1.93	2.43	2.74	3.90	4.33	6.42	6.58	
170.156	7.50	5.96	4.78	3.86	3.99	3.81	3.91	3.91	4.06	4.03	3.46	3.35	2.91	2.86	2.49	2.47	2.16	2.17	1.99	2.03	2.05	2.14	2.31	2.49	3.08	3.38	4.48	5.35	9.10	10.41	
172.969	6.41	5.69	4.71	3.83	3.98	3.81	3.93	3.95	4.11	4.06	4.21	4.14	3.76	3.67	3.19	3.15	2.76	2.77	2.54	2.58	2.59	2.67	2.83	2.95	3.50	3.67	4.25	5.06	7.97	9.01	
175.781	6.20	5.85	4.64	3.79	3.97	3.80	3.94	3.95	4.11	4.06	4.22	4.12	4.19	4.07	4.04	3.95	3.46	3.43	3.13	3.14	3.11	3.14	3.23	3.25	3.68	3.67	3.94	4.41	6.21	5.91	
178.594	6.28	5.86	4.58	3.70	3.90	3.76	3.89	3.92	4.09	4.06	4.16	4.06	4.13	4.01	4.06	4.02	3.90	3.83	3.67	3.64	3.56	3.54	3.55	3.49	3.62	3.66	3.70	4.36	6.26	6.44	
was min t	0.250	0.250	0.230	0.230	0.210	0.210	0.200	0.200	0.190	0.190	0.180	0.180	0.170	0.170	0.160	0.160	0.160	0.160	0.150	0.150	0.150	0.150	0.150	0.150	0.160	0.160	0.170	0.170	0.190	0.190	+/-0.010
now min t	0.247	0.247	0.230	0.230	0.210	0.210	0.196	0.196	0.185	0.185	0.176	0.176	0.168	0.168	0.160	0.160	0.153	0.153	0.148	0.148	0.147	0.147	0.148	0.148	0.155	0.155	0.169	0.169	0.196	0.196	+/-0.005

Wi iam Torres 4/9/-1

Existing thickness negative M.S.

Minimum General Stability Margins for Outer Case (0 -180 deg) - Revised Thickness / 1 Full Iteration -

Panel M.S. Element Map

Thet/Sta	0.76	2.28	3.81	5.35	6.89	8.43	9.97	11.51	13.05	14.59	16.13	17.67	19.22	20.76
1.406	7.80	5.72	4.26	3.40	3.47	3.34	3.50	3.53	3.68	3.84	3.73	3.65	3.45	3.43
4.219	7.63	5.71	4.34	3.42	3.48	3.36	3.52	3.54	3.67	3.82	3.53	3.49	2.91	2.88
7.031	7.47	5.73	4.52	3.51	3.57	3.44	3.59	3.58	3.66	3.56	2.97	2.90	2.37	2.34
9.844	7.30	5.74	4.64	3.67	3.74	3.55	3.65	3.60	3.15	3.00	2.46	2.39	1.93	1.91
12.656	7.27	5.68	4.82	3.76	3.74	3.51	3.08	2.87	2.34	2.27	1.88	1.88	1.54	1.57
15.469	5.62	5.82	4.97	3.95	2.86	2.80	2.06	2.01	1.86	1.87	1.40	1.44	1.17	1.20
18.281	5.39	4.12	3.10	2.83	1.77	1.71	1.43	1.46	1.24	1.30	1.10	1.16	0.95	0.99
21.094	1.49	2.14	1.58	1.69	1.09	1.18	1.04	1.14	1.00	1.09	0.94	1.00	0.81	0.88
23.906	1.14	1.30	0.84	1.15	0.77	0.93	0.86	1.00	0.89	0.98	0.84	0.92	0.74	0.79
26.719	0.48	1.02	0.78	1.06	0.73	0.91	0.84	0.97	0.87	0.97	0.85	0.93	0.74	0.74
29.531	1.17	1.33	1.15	1.36	0.93	1.06	0.97	1.10	0.99	1.10	0.90	0.91	0.67	0.67
32.344	2.80	2.89	2.13	2.12	1.40	1.46	1.32	1.38	1.10	1.09	0.83	0.80	0.58	0.54
35.156	3.26	3.89	3.32	2.98	2.00	1.73	1.29	1.20	0.90	0.87	0.65	0.65	0.44	0.45
37.969	1.73	2.38	1.86	1.80	1.07	1.03	0.81	0.80	0.61	0.62	0.46	0.48	0.32	0.35
40.781	0.87	1.04	0.81	0.91	0.50	0.55	0.44	0.49	0.37	0.42	0.31	0.36	0.24	0.28
43.594	0.73	0.72	0.47	0.55	0.23	0.30	0.23	0.30	0.23	0.29	0.21	0.26	0.16	0.22
46.406	0.45	0.50	0.31	0.39	0.12	0.20	0.14	0.22	0.15	0.22	0.15	0.21	0.12	0.18
49.219	0.31	0.48	0.26	0.38	0.12	0.20	0.14	0.21	0.15	0.21	0.14	0.20	0.11	0.16
52.031	0.49	0.56	0.44	0.55	0.24	0.30	0.22	0.28	0.20	0.26	0.17	0.22	0.12	0.17
54.844	1.86	1.46	0.98	0.97	0.49	0.52	0.39	0.42	0.31	0.35	0.24	0.29	0.17	0.21
57.656	3.43	2.74	1.79	1.58	0.86	0.82	0.62	0.63	0.47	0.50	0.36	0.39	0.25	0.28
60.469	1.59	2.21	2.11	2.00	1.15	1.09	0.85	0.84	0.65	0.66	0.50	0.52	0.36	0.38
63.281	1.33	1.66	1.42	1.83	1.35	1.33	1.08	1.08	0.86	0.87	0.68	0.69	0.50	0.51
66.094	1.27	1.88	1.46	1.79	1.36	1.58	1.35	1.37	1.13	1.13	0.91	0.91	0.69	0.69
68.906	1.93	2.32	2.20	2.40	1.86	1.80	1.67	1.74	1.47	1.48	1.21	1.21	0.94	0.93
71.719	4.23	3.97	3.22	3.36	2.31	2.27	1.97	2.03	1.80	1.80	1.61	1.60	1.28	1.26
74.531	5.96	5.83	4.72	4.57	3.09	2.91	2.43	2.38	2.04	2.06	1.79	1.86	1.58	1.63
77.344	7.67	7.17	5.71	4.94	3.76	3.45	2.95	2.83	2.39	2.36	2.01	2.02	1.70	1.74
80.156	5.63	7.10	6.07	4.92	3.83	3.67	3.16	3.07	2.63	2.58	2.21	2.19	1.85	1.86
82.969	5.93	4.24	5.33	4.55	3.76	3.69	3.26	3.23	2.82	2.78	2.40	2.38	2.02	2.03
85.781	5.90	5.82	4.87	4.16	3.74	3.77	3.41	3.43	3.05	3.04	2.66	2.65	2.27	2.28
88.594	6.50	6.19	4.90	3.81	3.83	3.75	3.65	3.70	3.32	3.34	2.95	2.95	2.56	2.57
91.406	6.55	6.44	4.57	3.58	3.70	3.65	3.91	4.01	3.63	3.64	3.25	3.25	2.84	2.84
94.219	6.46	6.57	4.43	3.45	3.55	3.49	3.73	3.82	3.89	3.86	3.46	3.39	2.82	2.76
97.031	6.60	6.77	4.49	3.44	3.51	3.42	3.63	3.70	3.46	3.39	2.89	2.84	2.37	2.35
99.844	7.06	7.07	4.76	3.57	3.57	3.43	3.39	3.31	2.82	2.77	2.36	2.36	1.98	2.01
102.656	7.82	7.27	5.39	3.86	3.46	3.30	2.77	2.69	2.26	2.29	1.97	2.02	1.72	1.79
105.469	6.78	6.44	4.73	4.18	2.74	2.61	2.19	2.19	1.90	1.97	1.73	1.83	1.59	1.69
108.281	5.21	4.63	3.42	3.12	2.01	2.02	1.77	1.87	1.66	1.82	1.66	1.78	1.43	1.40
111.094	2.12	2.54	2.03	2.14	1.48	1.64	1.54	1.74	1.61	1.60	1.31	1.29	1.01	0.90
113.906	1.20	1.79	1.37	1.69	1.29	1.56	1.45	1.44	1.18	1.17	0.94	0.93	0.70	0.70
116.719	1.25	1.62	1.39	1.82	1.41	1.36	1.09	1.08	0.86	0.86	0.67	0.67	0.48	0.49
119.531	1.52	2.16	2.14	1.86	1.07	0.90	0.76	0.74	0.57	0.59	0.45	0.47	0.32	0.35
122.344	1.94	1.75	1.18	1.10	0.58	0.58	0.43	0.46	0.34	0.38	0.27	0.31	0.19	0.23
125.156	0.85	0.82	0.54	0.59	0.24	0.29	0.21	0.27	0.16	0.24	0.15	0.20	0.10	0.15
127.969	0.15	0.35	0.16	0.28	0.05	0.13	0.08	0.15	0.09	0.16	0.09	0.14	0.05	0.10
130.781	0.06	0.25	0.06	0.20	-0.01	0.08	0.04	0.11	0.06	0.13	0.08	0.12	0.03	0.08
133.594	0.31	0.37	0.21	0.31	0.05	0.13	0.08	0.15	0.09	0.15	0.08	0.13	0.04	0.09
136.406	0.86	0.89	0.59	0.62	0.26	0.30	0.22	0.27	0.18	0.23	0.14	0.18	0.08	0.12
139.219	1.46	1.45	1.05	1.07	0.58	0.60	0.46	0.48	0.34	0.38	0.24	0.27	0.15	0.19
142.031	2.41	2.43	1.83	1.75	0.98	0.93	0.71	0.70	0.53	0.53	0.37	0.38	0.23	0.26
144.844	3.34	3.32	2.80	2.45	1.44	1.31	1.00	0.95	0.73	0.72	0.54	0.54	0.35	0.36
147.656	2.12	2.07	1.57	1.83	1.08	1.17	1.04	1.14	0.93	0.94	0.72	0.72	0.51	0.50
150.469	0.79	0.95	0.86	1.07	0.72	0.87	0.81	0.95	0.86	0.98	0.85	0.87	0.66	0.67
153.281	0.40	0.89	0.86	0.91	0.61	0.78	0.75	0.90	0.82	0.94	0.84	0.94	0.77	0.77
156.094	1.15	1.34	0.96	1.14	0.75	0.80	0.84	0.98	0.89	1.00	0.88	0.97	0.80	0.88
158.906	2.04	2.35	1.78	1.82	1.17	1.25	1.11	1.21	1.07	1.16	1.00	1.07	0.87	0.91
161.719	5.70	4.48	3.21	2.98	1.90	1.87	1.57	1.61	1.38	1.44	1.22	1.25	1.00	1.03
164.531	6.02	5.97	4.90	3.95	2.97	2.78	2.27	2.21	1.84	1.85	1.55	1.55	1.24	1.24
167.344	6.59	5.93	4.78	3.83	3.82	3.62	3.23	3.04	2.50	2.44	2.04	2.00	1.60	1.58
170.156	7.43	5.87	4.66	3.78	3.82	3.84	3.78	3.78	3.39	3.25	2.71	2.63	2.12	2.09
172.969	6.37	5.74	4.61	3.74	3.81	3.64	3.80	3.81	3.98	3.94	3.80	3.46	2.81	2.73
175.781	8.01	5.77	4.54	3.71	3.80	3.64	3.80	3.81	3.98	3.94	4.06	3.97	3.62	3.52
178.594	8.17	5.78	4.49	3.82	3.73	3.60	3.76	3.78	3.96	3.93	4.01	3.91	3.91	3.84
min t	0.34	0.34	0.22	0.22	0.19	0.19	0.18	0.18	0.17	0.17	0.16	0.16	0.15	0.15
req min t	0.25	0.25	0.23	0.23	0.21	0.21	0.20	0.20	0.19	0.19	0.18	0.18	0.17	0.17
	1		2		3		4		5		6		7	

Thet/Sta	22.30	23.84	25.38	26.92	28.46	30.00	31.54	33.08	34.62	36.16	37.70	39.24	40.78	42.32	43.85	45.37
1.406	2.85	2.84	2.83	2.83	2.32	2.33	2.34	2.33	1.52	1.54	1.56	1.61	1.59	1.97	3.02	4.30
4.219	2.37	2.37	2.37	2.39	1.96	1.99	2.03	2.07	2.59	2.61	2.60	2.56	1.61	3.40	4.13	4.31
7.031	1.91	1.91	1.93	1.96	1.60	1.65	1.72	1.81	2.36	2.48	2.58	2.65	3.14	3.60	4.29	4.35
9.844	1.54	1.55	1.58	1.62	1.31	1.37	1.45	1.56	2.12	2.32	2.57	2.63	3.43	4.23	4.90	4.70
12.656	1.27	1.30	1.34	1.39	1.12	1.18	1.25	1.35	1.85	2.01	2.21	2.48	3.80	4.53	5.78	6.40
15.469	0.96	0.99	1.03	1.07	0.83	0.87	0.91	0.85	1.29	1.32	1.38	1.50	2.47	2.81	3.79	4.05
18.281	0.78	0.82	0.84	0.86	0.62	0.64	0.63	0.60	0.82	0.81	0.80	0.82	1.42	1.57	2.12	2.93
21.094	0.65	0.68	0.70	0.71	0.44	0.41	0.37	0.34	0.51	0.47	0.43	0.39	0.77	0.72	0.93	0.74
23.906	0.59	0.60	0.57	0.54	0.30	0.26	0.22	0.18	0.31	0.25	0.19	0.14	0.40	0.30	0.33	0.53
26.719	0.51	0.50	0.47	0.43	0.20	0.16	0.12	0.08	0.19	0.13	0.07	0.00	0.21	0.09	0.09	-0.11
29.531	0.43	0.40	0.37	0.34	0.14	0.11	0.06	0.04	0.16	0.12	0.06	0.00	0.23	0.14	0.18	0.10
32.344	0.33	0.33	0.32	0.31	0.12	0.11	0.10	0.08	0.23	0.20	0.17	0.14	0.46	0.42	0.62	0.64
35.156	0.27	0.28	0.29	0.30	0.14	0.15	0.16	0.17	0.37	0.39	0.42	0.46	0.96	1.11	1.56	1.80
37.969	0.20	0.23	0.27	0.30	0.16	0.20	0.24	0.30	0.57	0.67	0.81	1.01	1.86	1.80	1.40	1.28
40.781	0.16	0.21	0.26	0.32	0.20	0.27	0.36	0.46	0.84	1.04	1.30	1.41	1.43	1.86	2.04	2.32
43.594	0.12	0.18	0.25	0.33	0.23	0.32	0.44	0.55	0.87	0.96	1.06	1.17	1.52	1.91	2.73	3.31
46.406	0.09	0.15	0.22	0.30	0.21	0.30	0.35	0.40	0.68	0.74	0.80	0.87	1.46	1.61	2.06	2.13
49.219	0.07	0.13	0.20	0.27	0.17	0.21	0.24	0.27	0.51	0.55	0.60	0.64	1.19	1.22	1.54	1.40
52.031	0.07	0.13	0.18	0.24	0.12	0.13	0.15	0.17	0.38	0.41	0.45	0.49	1.01	1.08	1.44	1.32
54.844	0.10	0.14	0.19	0.23	0.07	0.07	0.08	0.08	0.27	0.29	0.32	0.36	0.86	0.98	1.49	1.79
57.656	0.15	0.18	0.21	0.23	0.05	0.04	0.03	0.03	0.16	0.18	0.19	0.20	0.62	0.70	1.08	1.47
60.469	0.23	0.25	0.27	0.25	0.06	0.04	0.01	-0.01	0.12	0.10	0.07	0.05	0.34	0.31	0.47	0.35
63.281	0.34	0.35	0.34	0.30	0.09	0.06	0.03	-0.01	0.11	0.06	0.01	-0.06	0.16	0.08	0.13	0.32
66.094	0.48	0.40	0.44	0.40	0.17	0.13	0.08	0.04	0.15	0.09	0.02	-0.05	0.15	0.04	0.06	-0.08
68.906	0.69	0.66	0.60	0.55	0.29	0.24	0.19	0.14	0.26	0.21	0.14	0.09	0.34	0.26	0.33	0.25
71.719	0.97	0.90	0.83	0.77	0.46	0.42	0.37	0.33	0.48	0.44	0.40	0.36	0.79	0.82	1.21	1.46
74.531	1.32	1.24	1.17	1.10	0.76	0.71	0.67	0.63	0.85	0.83	0.84	0.87	1.49	1.59	2.01	2.06
77.344	1.46	1.50	1.55	1.57	1.19	1.16	1.13	1.11	1.43	1.45	1.50	1.59	2.40	2.41	2.54	2.42
80.156	1.57	1.60	1.64	1.69	1.43	1.49	1.55	1.62	2.03	2.13	2.26	2.38	3.25	3.37	3.77	3.98
82.969	1.72	1.75	1.80	1.86	1.59	1.67	1.76	1.87	2.30	2.33	2.35	2.35	3.22	3.24	3.70	3.85
85.781	1.95	1.98	2.03	2.10	1.82	1.91	2.02	1.98	2.30	2.31	2.27	2.22	3.03	3.01	3.50	3.59
88.594	2.21	2.25	2.29	2.38	2.05	2.05	2.02	1.98	2.35	2.30	2.24	2.19	2.97	2.93	3.41	3.47
91.406	2.46	2.49	2.49	2.46	2.01	2.00	1.95	1.97	2.36	2.33	2.28	2.23	2.90	2.89	3.22	3.65
94.219	2.28	2.27	2.25	2.27	1.86	1.90	1.93	1.94	2.37	2.37	2.35	2.31	3.10	2.94	3.19	3.23
97.031	1.96	1.98	2.01	2.06	1.72	1.78	1.84	1.91	2.37	2.42	2.46	2.44	3.28	3.06	3.15	3.41
99.844	1.69	1.74	1.81	1.88	1.59	1.67	1.76	1.85	2.26	2.29	2.29	2.25	3.00	2.74	2.73	2.37
102.656	1.52	1.60	1.68	1.70	1.29	1.26	1.23	1.21	1.55	1.56	1.58	1.60	2.41	2.37	2.77	3.18
105.469	1.43	1.35	1.28	1.22	0.87	0.83	0.79	0.77	1.03	1.03	1.05	1.10	1.83	1.96	2.40	2.74
108.281	1.08	1.02	0.96	0.90	0.59	0.55	0.51	0.47	0.66	0.65	0.66	0.70	1.31	1.36	1.73	1.71
111.094	0.74	0.72	0.71	0.69	0.42	0.37	0.33	0.29	0.45	0.41	0.38	0.37	0.79	0.73	0.84	0.72
113.906	0.40	0.40	0.40	0.49	0.29	0.27	0.23	0.18	0.32	0.26	0.21	0.15	0.43	0.34	0.40	0.28
116.719	0.32	0.33	0.34	0.35	0.18	0.18	0.18	0.15	0.28	0.22	0.15	0.07	0.29	0.17	0.45	0.28
119.531	0.20	0.22	0.24	0.26	0.11	0.12	0.13	0.14	0.32	0.28	0.22	0.16	0.43	0.33	0.75	0.51
122.344	0.11	0.14	0.18	0.21	0.08	0.11	0.13	0.16	0.36	0.40	0.43	0.43	0.87	0.94	1.36	1.80
125.156	0.04	0.08	0.12	0.17	0.05	0.09	0.13	0.17	0.40	0.45	0.52	0.59	1.20	1.41	2.13	2.35
127.969	0.00	0.05	0.10	0.15	0.04	0.09	0.14	0.19	0.44	0.50	0.57	0.63	1.19	1.24	1.47	1.13
130.781	-0.01	0.04	0.09	0.15	0.04	0.10	0.16	0.23	0.49	0.52	0.56	0.60	1.14	1.22	1.49	1.22
133.594	0.00	0.04	0.10	0.16	0.08	0.12	0.20	0.27	0.48	0.48	0.48	0.47	0.90	0.90	1.17	1.22
136.406	0.02	0.07	0.12	0.18	0.08	0.14	0.22	0.27	0.46	0.45	0.43	0.40	0.76	0.88	0.85	0.83
139.219	0.07	0.11	0.15	0.20	0.09	0.15	0.22	0.27	0.46	0.46	0.44	0.39	0.73	0.84	0.74	0.74
142.031	0.13	0.16	0.19	0.23	0.10	0.14	0.18	0.24	0.45	0.44	0.43	0.43	0.86	0.79	0.90	0.88
144.844	0.20	0.22	0.24	0.28	0.11	0.12	0.13	0.15	0.35	0.38	0.43	0.45	0.93	1.00	1.42	1.74
147.656	0.31	0.31	0.31	0.31	0.13	0.11	0.10	0.08	0.23	0.21	0.19	0.17	0.52	0.55	0.88	1.05
150.469	0.44	0.42	0.40	0.38	0.18	0.14	0.10	0.06	0.17	0.11	0.05	-0.01	0.21	0.12	0.16	0.06
153.281	0.55	0.55	0.53	0.49	0.25	0.19	0.14	0.08	0.18	0.11	0.03	-0.06	0.12	-0.01	-0.01	-0.18
156.094	0.86	0.85	0.83	0.59	0.32	0.27	0.21	0.15	0.26	0.18	0.10	0.02	0.22	0.11	0.14	0.31
158.906	0.70	0.73	0.75	0.73	0.44	0.39	0.33	0.27	0.40	0.34	0.27	0.22	0.53	0.47	0.63	0.47
161.719	0.79	0.81	0.83	0.84	0.59	0.58	0.53	0.49	0.67	0.63	0.61	0.61	1.13	1.23	1.67	2.29
164.531	0.97	0.97	0.98	0.99	0.73	0.75	0.76	0.79	1.09	1.10	1.15	1.24	2.10	2.34	3.20	3.42
167.344	1.25	1.25	1.25	1.26	0.97	0.99	1.03	1.08	1.50	1.62	1.80	2.05	3.42	3.84	4.77	4.91
170.156	1.57	1.65	1.65	1.66	1.32	1.35	1.40	1.47	1.97	2.13	2.33	2.59	4.12	4.72	6.60	8.49
172.969	2.21	2.18	2.16	2.16	1.75	1.78	1.82	1.80	2.43	2.55	2.88	2.82	4.15	4.46	5.76	6.52
175.781	2.86	2.79	2.74	2.71	2.21	2.22	2.23	2.26	2.79	2.81	2.83	2.82	3.86	3.85	4.42	4.19
178.594	3.36	3.35	3.28	3.22	2.62	2.60	2.59	2.57	3.09	3.03	2.96	2.88	3.82	3.83	4.46	4.61
min t	0.14	0.14	0.14	0.14	0.13	0.13	0.13	0.13	0.14	0.14	0.14	0.14	0.16	0.16	0.17	0.17
req min t	0.16	0.16	0.16	0.16	0.15	0.15	0.15	0.15	0.15	0.15	0.16	0.16	0.17	0.17	0.19	0.19
	8		9		10		11		12		13		14		15	

General Stability 22.3° Case 2031

Mint = 0.25 Maxt = 0.27

Nomt = 0.25 + .01 = 0.26

Tolerance : 0.26 ± .01

William Torres

4/9/9

Existing thickness shows negative M.S

Minimum General Stability Margins for Outer Case (180 -360 deg) - Revised Thickness / 1 Full Iteration -

Panel	M.S.	Element Map																												
Thet/Sta	0.76	2.28	3.81	5.35	6.89	8.43	9.97	11.51	13.05	14.59	16.13	17.67	19.22	20.76	22.30	23.84	25.38	26.92	28.46	30.00	31.54	33.08	34.62	36.16	37.70	39.24	40.78	42.32	43.86	45.37
181.406	6.37	5.76	4.42	3.56	3.65	3.51	3.68	3.71	3.89	3.87	3.97	3.87	3.91	3.80	3.31	3.31	3.26	3.21	2.62	2.60	2.59	2.57	3.08	3.02	2.93	2.83	3.40	3.74	4.40	4.62
184.219	8.34	5.79	4.39	3.52	3.59	3.45	3.61	3.63	3.80	3.78	3.90	3.83	3.46	3.44	2.83	2.75	2.70	2.67	2.17	2.18	2.20	2.22	2.73	2.73	2.70	2.64	3.15	3.61	4.31	4.48
187.031	8.24	5.83	4.41	3.50	3.56	3.42	3.56	3.56	3.71	3.68	3.50	3.44	2.79	2.69	2.16	2.12	2.09	2.09	1.69	1.72	1.76	1.82	2.34	2.43	2.50	2.53	3.29	3.38	4.37	2.17
189.844	8.22	5.89	4.51	3.54	3.58	3.41	3.52	3.51	3.44	3.30	2.70	2.59	2.08	2.03	1.62	1.60	1.60	1.61	1.28	1.31	1.36	1.44	1.94	2.09	2.26	2.44	3.47	3.91	4.74	4.93
192.656	8.30	6.02	4.70	3.65	3.64	3.42	3.20	3.02	2.48	2.41	2.00	1.96	1.56	1.54	1.21	1.20	1.20	1.21	0.93	0.95	0.99	1.04	1.45	1.58	1.77	2.03	3.46	4.11	5.52	5.96
195.469	7.90	6.28	5.04	3.83	2.87	2.67	2.18	2.12	1.77	1.79	1.50	1.50	1.20	1.21	0.94	0.94	0.95	0.96	0.70	0.71	0.72	0.74	1.05	1.11	1.17	1.28	2.21	2.62	4.02	5.09
198.281	5.71	4.08	3.05	2.84	1.80	1.77	1.49	1.53	1.32	1.39	1.19	1.23	0.99	1.02	0.78	0.81	0.81	0.82	0.57	0.56	0.53	0.49	0.67	0.63	0.61	0.61	1.13	1.25	1.69	2.35
201.094	1.67	2.12	1.66	1.74	1.13	1.21	1.08	1.18	1.05	1.16	1.01	1.09	0.89	0.94	0.73	0.75	0.77	0.78	0.48	0.42	0.35	0.29	0.42	0.35	0.28	0.22	0.53	0.46	0.60	0.42
203.906	1.19	1.17	0.99	1.18	0.78	0.93	0.87	1.02	0.94	1.07	0.95	1.06	0.88	0.95	0.75	0.77	0.74	0.68	0.39	0.33	0.27	0.20	0.30	0.22	0.13	0.04	0.25	0.14	0.16	0.35
206.719	0.47	1.01	0.77	1.03	0.71	0.89	0.85	1.02	0.95	1.10	1.01	1.12	0.95	1.00	0.76	0.73	0.69	0.64	0.37	0.30	0.23	0.16	0.26	0.17	0.08	-0.02	0.16	0.03	0.02	-0.16
209.531	1.05	1.11	1.03	1.29	0.90	1.08	1.03	1.20	1.13	1.29	1.16	1.21	0.97	0.97	0.71	0.69	0.64	0.58	0.32	0.27	0.22	0.16	0.28	0.21	0.14	0.06	0.28	0.18	0.20	0.09
212.344	2.35	2.41	1.90	2.02	1.43	1.57	1.46	1.60	1.36	1.37	1.10	1.10	0.85	0.86	0.60	0.57	0.55	0.52	0.29	0.27	0.25	0.23	0.39	0.36	0.33	0.31	0.69	0.69	1.00	1.14
215.156	3.80	3.93	3.33	3.20	2.04	1.84	1.50	1.45	1.16	1.16	0.93	0.95	0.70	0.69	0.47	0.47	0.48	0.49	0.30	0.31	0.33	0.35	0.59	0.63	0.66	0.67	1.21	1.29	1.77	2.15
217.969	2.90	3.08	2.36	2.19	1.47	1.45	1.17	1.16	0.94	0.93	0.72	0.72	0.52	0.54	0.37	0.39	0.43	0.46	0.31	0.35	0.41	0.48	0.71	0.70	0.68	0.68	1.19	1.14	1.34	1.08
220.781	1.96	1.97	1.49	1.53	0.94	0.99	0.80	0.81	0.64	0.67	0.51	0.55	0.39	0.43	0.29	0.33	0.38	0.44	0.31	0.38	0.48	0.53	0.75	0.73	0.70	0.66	1.10	1.02	1.16	1.07
223.594	1.37	1.36	0.96	1.01	0.55	0.61	0.49	0.55	0.44	0.49	0.36	0.43	0.30	0.35	0.23	0.28	0.35	0.42	0.30	0.39	0.50	0.56	0.80	0.78	0.74	0.69	1.14	1.06	1.28	1.27
226.406	0.61	0.70	0.50	0.62	0.30	0.39	0.33	0.41	0.32	0.39	0.30	0.36	0.25	0.30	0.19	0.25	0.32	0.40	0.28	0.37	0.47	0.58	0.84	0.85	0.84	0.82	1.33	1.29	1.61	1.74
229.219	0.29	0.53	0.31	0.47	0.21	0.32	0.27	0.35	0.28	0.35	0.27	0.33	0.23	0.29	0.18	0.24	0.30	0.37	0.25	0.32	0.41	0.49	0.83	0.91	0.97	1.02	1.39	1.62	1.86	1.44
232.031	0.42	0.67	0.43	0.57	0.28	0.37	0.31	0.38	0.31	0.38	0.29	0.35	0.24	0.30	0.18	0.24	0.29	0.35	0.23	0.28	0.34	0.40	0.67	0.72	0.75	0.77	1.29	1.25	1.54	1.05
234.844	1.41	1.30	0.90	0.93	0.50	0.55	0.44	0.50	0.40	0.46	0.35	0.41	0.29	0.34	0.21	0.26	0.31	0.36	0.22	0.26	0.30	0.34	0.59	0.63	0.66	0.69	1.24	1.27	1.57	1.82
237.656	2.93	2.45	1.84	1.51	0.86	0.85	0.67	0.70	0.56	0.60	0.47	0.52	0.37	0.41	0.28	0.31	0.35	0.39	0.24	0.27	0.30	0.33	0.55	0.55	0.54	0.51	0.95	0.98	1.53	1.74
240.469	1.58	2.26	2.32	2.24	1.32	1.25	0.99	0.99	0.79	0.82	0.65	0.68	0.51	0.54	0.38	0.41	0.44	0.47	0.30	0.30	0.30	0.27	0.40	0.32	0.24	0.14	0.36	0.21	0.50	0.21
243.281	1.39	1.79	1.62	2.12	1.67	1.67	1.39	1.37	1.11	1.11	0.90	0.92	0.70	0.72	0.53	0.55	0.57	0.57	0.35	0.32	0.26	0.20	0.31	0.23	0.14	0.05	0.24	0.11	0.37	0.24
246.094	1.53	2.17	1.70	2.08	1.64	1.85	1.68	1.71	1.49	1.51	1.25	1.25	0.98	0.99	0.74	0.74	0.73	0.66	0.38	0.33	0.27	0.21	0.33	0.27	0.20	0.14	0.41	0.33	0.58	0.32
248.906	2.56	2.98	2.68	2.73	1.91	1.86	1.84	1.83	1.87	1.86	1.58	1.57	1.25	1.24	0.94	0.87	0.81	0.75	0.46	0.40	0.35	0.31	0.46	0.42	0.39	0.38	0.81	0.79	0.89	0.71
251.719	5.37	5.11	4.18	3.52	2.49	2.28	2.11	2.14	1.94	2.04	1.85	1.96	1.56	1.47	1.10	1.03	0.97	0.90	0.60	0.55	0.51	0.48	0.68	0.67	0.69	0.73	1.38	1.46	1.88	1.93
254.531	6.67	6.32	4.97	3.92	3.07	2.79	2.44	2.39	2.06	2.08	1.81	1.87	1.61	1.67	1.34	1.27	1.21	1.16	0.83	0.80	0.77	0.76	1.02	1.04	1.06	1.15	1.90	2.09	2.69	3.06
257.344	8.38	7.20	5.47	4.09	3.52	3.25	2.81	2.71	2.28	2.25	1.92	1.92	1.62	1.65	1.39	1.44	1.49	1.49	1.16	1.16	1.15	1.16	1.50	1.53	1.58	1.61	2.41	2.35	2.63	2.91
260.156	7.17	7.49	5.63	4.12	3.67	3.37	3.16	3.05	2.58	2.51	2.12	2.10	1.75	1.75	1.45	1.48	1.52	1.57	1.32	1.38	1.45	1.53	1.91	1.96	1.98	1.98	2.63	2.41	2.34	2.14
262.969	5.61	5.86	5.19	4.22	3.82	3.52	3.49	3.40	2.92	2.83	2.40	2.35	1.96	1.94	1.60	1.61	1.63	1.65	1.37	1.41	1.45	1.49	1.86	1.89	1.90	1.88	2.54	2.43	2.62	2.76
265.781	6.30	6.61	5.74	4.45	4.03	3.71	3.81	3.74	3.25	3.17	2.71	2.65	2.22	2.18	1.80	1.79	1.78	1.79	1.46	1.47	1.48	1.49	1.81	1.79	1.74	1.88	2.25	2.09	2.27	2.43
268.594	6.43	7.18	6.62	4.66	4.28	3.95	4.10	4.04	3.55	3.48	3.01	2.94	2.48	2.43	2.02	1.98	1.96	1.94	1.58	1.56	1.54	1.52	1.82	1.77	1.71	1.63	2.17	2.00	2.11	1.89
271.406	5.76	6.27	5.89	4.88	4.41	4.06	4.28	4.25	3.75	3.70	3.23	3.16	2.69	2.64	2.20	2.16	2.12	2.08	1.69	1.66	1.63	1.59	1.89	1.85	1.81	1.78	2.45	2.47	2.90	3.03
274.219	5.27	6.15	5.86	4.86	4.39	3.99	4.13	4.15	3.65	3.61	3.12	3.09	2.62	2.61	2.21	2.23	2.20	2.18	1.78	1.75	1.72	1.69	2.01	1.99	1.98	2.00	2.83	3.07	4.05	3.52
277.031	5.13	5.92	5.42	4.76	4.25	3.86	3.85	3.82	3.32	3.27	2.82	2.79	2.36	2.36	1.99	2.02	2.06	2.10	1.72	1.72	1.73	1.74	2.13	2.14	2.16	2.18	2.96	2.92	3.15	2.60
279.844	7.28	6.72	5.71	4.59	4.07	3.68	3.62	3.54	3.05	2.99	2.56	2.55	2.16	2.17	1.83	1.87	1.91	1.95	1.59	1.60	1.62	1.65	2.07	2.13	2.19	2.26	3.12	3.09	3.38	3.35
282.656	5.72	5.98	5.30	4.48	3.88	3.45	3.15	3.04	2.56	2.55	2.18	2.22	1.88	1.93	1.63	1.68	1.74	1.74	1.36	1.31	1.28	1.26	1.60	1.62	1.67	1.76	2.76	2.86	3.11	3.30
285.469	5.19	5.14	4.26	4.21	3.09	2.91	2.43	2.42	2.08	2.14	1.87	1.95	1.67	1.66	1.32	1.29	1.24	1.17	0.82	0.77	0.73	0.69	0.92	0.90	0.91	0.94	1.61	1.74	2.22	2.26
288.281	4.23	3.89	3.12	3.23	2.11	2.13	1.86	1.95	1.75	1.85	1.54	1.51	1.20	1.18	0.90	0.88	0.81	0.76	0.47	0.42	0.38	0.34	0.50	0.45	0.42	0.39	0.81	0.84	1.23	1.47
291.094	1.78	2.18	1.94	2.08	1.45	1.61	1.51	1.61	1.35	1.33	1.08	1.07	0.82	0.81	0.58	0.57	0.52	0.47	0.24	0.20	0.16	0.11	0.24	0.19	0.13	0.07	0.33	0.25	0.34	0.28
293.906	1.14	1.42	1.27	1.57	1.17	1.42	1.18	1.17	0.94	0.94	0.73	0.73	0.52	0.53	0.34	0.35	0.31	0.28	0.08	0.05	0.02	-0.02	0.09	0.04	-0.01	-0.06	0.12	0.01	0.04	-0.09
296.719	1.20	1.54	1.26	1.63	1.14	1.09	0.85	0.83	0.63	0.63	0.47	0.47	0.31	0.32	0.17	0.17	0.17	0.15	-0.03	-0.05	-0.07	-0.09	0.02	-0.01	-0.05	-0.10	0.11	0.03	0.07	0.25
299.531	1.54	1.91	1.83	1.59	0.84	0.78	0.57	0.56	0.40	0.41	0.27	0.29	0.15	0.16	0.03	0.05	0.07	0.06	-0.09	-0.10	-0.11	-0.12	0.00	-0.01	-0.02	-0.09	0.26	0.25	0.40	0.29
302.344	2.08	1.83	1.18	1.06	0.51	0.48	0.33	0.33	0.21	0.23	0.12	0.14	0.03	0.05	-0.06	-0.03	-0.01	0.01	-0.13	-0.13	-0.13	-0.13	0.01	0.02	0.04	0.07	0.46	0.56	1.03	1.41
305.156	0.92	0.86	0.53	0.55	0.19	0.22	0.12	0.15	0.08	0.10	0.01	0.04	-0.05	-0.02	-0.11	-0.08	-0.05	-0.02	-0.14	-0.14	-0.13	-0.12	0.03	0.05	0.08	0.13	0.55	0.67	1.11	1.38
307.969	0.16	0.30	0.13	0.23	-0.01	0.04	-0.01	0.04	-0.03	0.02	-0.05	-0.01	-0.10	-0.06	-0.16	-0.11	-0.07	-0.03	-0.13	-0.12	-0.11	-0.10	0.07	0.09	0.12	0.14	0.54	0.57	0.77	0.67
310.781	0.05	0.20	0.00	0.11	-0.10	-0.03	-0.07	-0.01	-0.07	-0.02	-0.06	-0.04	-0.12	-0.06	-0.16	-0.12	-0.07	-0.02	-0.11	-0.09	-0.08	-0.06	0.11	0.14	0.16	0.18	0.56	0.57	0.80	0.81
313.594	0.19	0.23	0.08	0.15	-0.06	-0.02	-0.06	0.00	-0.03	-0.01	-0.07	-0.03	-0.11	-0.07	-0.15	-0.11	-0.06	-0.01	-0.10	-0.05	-0.02	0.00	0.18	0.21	0.23	0.25	0.66	0.68	0.93	0.95
316.406	0.54	0.54	0.30	0.34	0.05	0.09	0.02	0.07	0.00	0.05	-0.03	0.01	-0.07	-0.03	-0.12	-0.08	-0.04	0.01	-0.08	-0.03	0.03	0.07	0.27	0.30	0.34	0.37	0.83	0.87	1.19	1.24
319.219	1.10	1.07	0.71	0.72	0.30	0.31	0.20	0.23	0.13	0.16	0.06	0.10	-0.01	0.03	-0.07	-0.04	0.00	0.03	-0.07	-0.03	0.02	0.07	0.31	0.39	0.47	0.52	1.04	1.10	1.44	1.48
322.031	2.08	2.05	1.46	1.38	0.73	0.69	0.49	0.48	0.33	0.33	0.20	0.21	0.08	0.10	-0.02	0.00	0.02	0.05	-0.07	-0.04	-0.02	0.01	0.21	0.26	0.32	0.39	0.95	1.11	1.62	1.63
324.844	3.78	3.51	2.64	2.41	1.35	1.20	0.87	0.80	0.57	0.55	0.37	0.37	0.20	0.21	0.06	0.07	0.08	0.09	-0.05	-0.04	-0.04	-0.03	0.14	0.15	0.17	0.21	0.86	0.78	1.27	1.78
327.656	2.42	2.47	1.80	1.79	1.14	1.20	1.03	1.01	0.79	0.78	0.55	0.54	0.33	0.33	0.15	0.15	0.14	0.14	-0.02	-0.03	-0.03	-0.04	0.09	0.08	0.07	0.06	0.39	0.43	0.75	1.08
330.469	1.11	1.28	1.04	1.26	0.82	0.93	0.83	0.93	0.82	0.89	0.69	0.70	0.49	0.48	0.28	0.26	0.24	0.22	0.04	0.02	0.00	-0.02	0.10	0.06	0.02	-0.02	0.22	0.15	0.22	0.10
333.281	0.47	1.00	0.75	1.00	0.67	0.84	0.77	0.89	0.76	0.87	0.74	0.80	0.62	0.61	0.41	0.40	0.38	0.36	0.15	0.12	0.09	0.05	0.18	0.13	0.08	0.02	0.23	0.11	0.10	-0.08
336.094	1.11	1.30	0.93	1.13	0.74	0.89	0.82	0.95	0.85	0.93	0.79	0.86	0.68	0.72	0.54	0.55	0.53	0.51	0.28	0.26	0.23	0.20	0.36	0.30	0.25	0.20	0.48	0.37	0.41	0.58
338.906	1.48	2.00	1.56	1.86	1.07	1.15	1.02	1.12	0.98	1.07	0.93	1.00	0.80	0.85	0.64	0.67	0.70	0.72	0.47	0.45	0.42	0.40	0.59	0.56	0.54	0.50	0.92	0.90	1.15	1.01
341.719	4.89	3.92	2.96	2.75	1.73	1.70	1.42	1.46	1.25	1.31	1.12	1.19	0.97	1.03	0.81	0.86	0.88	0.91	0.67	0.69	0.71	0.70	0.95	0.94	0.94	0.97	1.82	1.75	2.30	2.89
344.531	6.99	5.65	4.98	3.99	2.84	2.61	2.11	2.05	1.71	1.72	1.45	1.49	1.23	1.28	1.02	1.06	1.11	1.15	0.91	0.96	1.00	1.05	1.42	1.45	1.52	1.62	2.58	2.77	3.39	3.13
347.344	7.52	5.68	4.76	3.80	3.85	3.66	3.17	2.97	2.43	2.37	1.97	1.98	1.63	1.66	1.37	1.40	1.44	1.48	1.20	1.26	1.33	1.43	1.93	2.09	2.27	2.51	3.93	4.44	5.90	5.56
350.156	7.59	5.78	4.80	3.89	3.81	3.67	3.81	3.79	3.21	3.08	2.55	2.50	2.03	2.02	1.64	1.66	1.69	1.74	1.42	1.48	1.57	1.68	2.28	2.61	2.82	3.22	4.13	5.58	7.83	10.92
352.969	7.63	5.77	4.50	3.53	3.63	3.53	3.70	3.71	3.74	3.65	3.08	3.02	2.49	2.47	2.02	2.03	2.05	2.09	1.72	1.78	1.86	1.96	2.56	2.73	2.94	3.17	3.83	4.85	5.96	6.48
355.781	7.78	5.74	4.34	3.45	3.54	3.43	3.60	3.63	3.79	3.74	3.63	3.60	3.01	2.99	2.47	2.47	2.48	2.50	2.06	2.10	2.15	2.20	2.76	2.82	2.87	2.89	3.49	3.89	4.40	3.98
358.594	8.03	5.72	4.25	3.42	3.51	3.39	3.55	3.58	3.73	3.70	3.80	3.72	3.49	3.48	2.90	2.89	2.88	2.88	2.36	2.37	2.36	2.36	2.90	2.86	1.55	1.60	1.60	1.97	3.00	4.24
min t	0.34	0.34	0.22	0.22	0.19	0.19	0.18	0.18	0.17	0.17	0.16	0.16	0.16	0.15	0.14	0.14	0.14	0.14	0.13	0.13	0.13	0.13	0.14	0.14	0.14	0.14	0.16	0.16	0.17	0.17
req min t	0.25	0.25	0.23	0.23	0.21	0.21	0.20	0.20	0.19	0.19	0.18	0.18	0.17	0.17	0.16	0.16	0.16	0.16	0.15	0.15	0.15	0.15	0.15	0.15	0.16	0.16	0.17	0.17	0.19	0.19

1 2 3 4 5 6 7 8 9 10 11 12 13 14 15

General instability Case 2031

Section 1.1.4 SUPPORT RINGS

Prepared By	Name/Date M. Gutierrez /Jan-03	LOCKHEED MARTIN Science, Engineering, Analysis, & Test *Mechanical Systems Analysis Department*	Page No. 1.1.4-1	File Name
Checked By	2/11/03		Drawing No. SDG39135784 SDG39135785	
Title	**Stress Analysis for Support Rings**			

COMPONENT: Vacuum Case Support Rings, SDG39135784 (Upper) and SDG39135785 (Lower)

MARGINS OF SAFETY:

PART	Material	Elem ID	Subcase	MSu	Page
Upper Ring	Al 7050-T7452	335196	Lnch 1016	0.075	8
Lower Ring	Al 7050-T7452	352047	Lndg 2020	0.03	9

INTRODUCTION:

The Support Rings, manufactured from Al Aly 7050-T7452, are connected to the Outer Cylinder and the Conical Flange. One at the top and another at the bottom of the Vacuum Case (VC). Figure 1 shows the VC. The ring segments between the USS-02 interface plates and the strap ports are machined into a "J" shape cross-section (Figure 5). The upper support ring is shown on Figure 2 and the lower support ring is shown on Figure 3. A model of the USS-02 is also included.

LOADS:

Load factors were applied as specified in the Structural Verification Plan for the launch and landing scenarios, plus an external 1-atm pressure load. Jobs were run for a selected 12 of 64 launch cases and 19 of 64 landing cases. These were compared to select the worst case for each ring. The results from these two cases were examined in detail and the lowest margins of safety were calculated for each ring.

CONSTRAINTS:

The AMS-02 FEM shown in Figure 4 is constrained at four trunnion and one keel locations, as it would be constrained in the shuttle cargo bay. The keel is fixed in the AMS-02 y-direction. The primary trunnions, located on the positive side of the x-axis, are fixed in the x- and z-directions. The secondary trunnions are fixed in the z-directions.

FACTORS OF SAFETY

A factor of safety of 1.4 is used on ultimate and 1.1 on yield. The temperature reduction factor at 140 def F is 0.92 for ultimate and 0.98 for yield.

MATH MODEL METHOD:

a. The Finite Element Model (FEM), composed primarily of CHEXA and CPENTA solid elements, was originally generated in IDEAS and modified with FEMAP. The gussets on the inside of the USS-02 interface plates are modeled with 2-D CQUAD4 and CTRIA3 elements. See Table 1.
b. Using CBUSH's, the "J-section" model was then respectively attached to the Conical Flanges at both ends of the Vacuum Case (VC) and to the Outer Cylinder. In the AMS-02 coordinate system, translations were fixed while rotations were set free for the CBUSH's representing bolts. Contact is simulated only in the z-direction using RBE2's. 64 bolt connections were modeled at each Conical Flange joint. 128 bolt connections were modeled at each end of the VC for the Outer Cylinder joints.
c. The strap ports are modeled as a point at the center of of the strap load-path with multiple rigid element "legs" fanning out to connect to the open "J-section" faces at the edge of the strap ports. This configuration was based on the assumption that the strap port sections will be considerably stiffer than the rest of the ring. Six of the plumbing ports are modeled in a similar manner. The rest are modeled as straight gussets on the outside face, making them look like boxed in holes.
d. The "J-section" design will employ 3/8" deep "pockets" along the inside surface of the conical flange attachment end. The model takes a conservative approach by modeling 1/2" deep pockets instead.

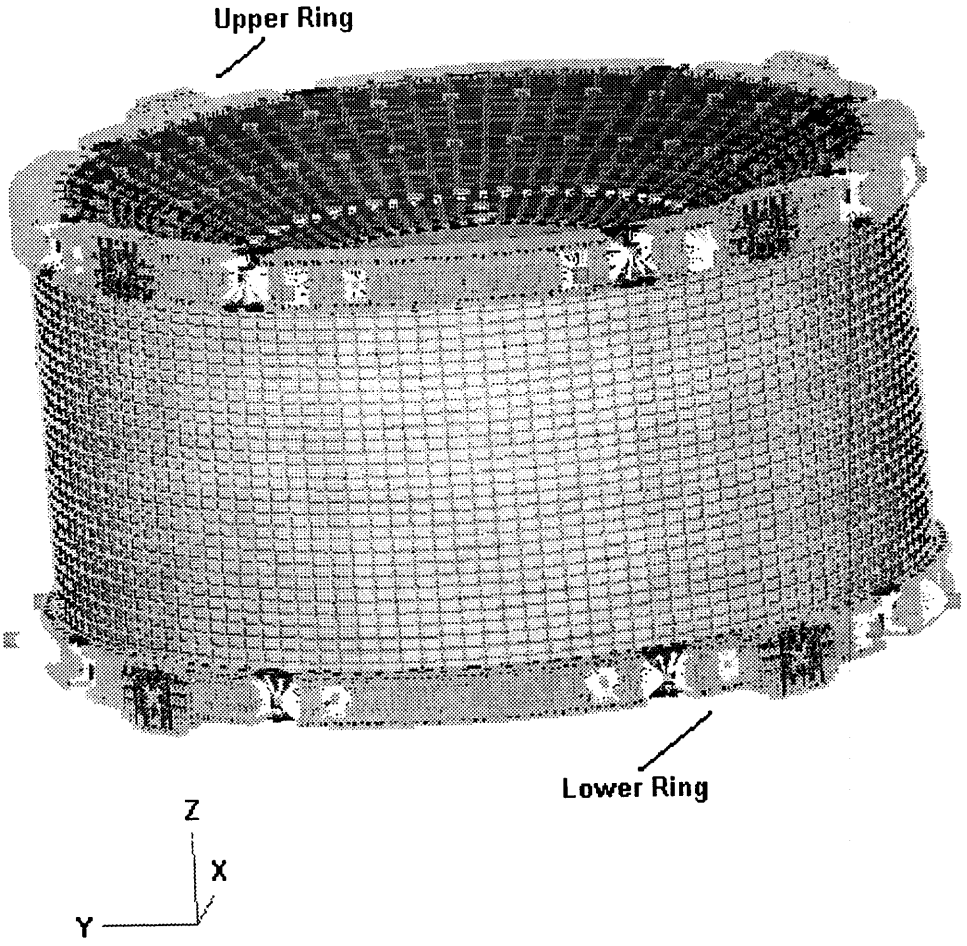

Figure 1. Vacuum Case Model

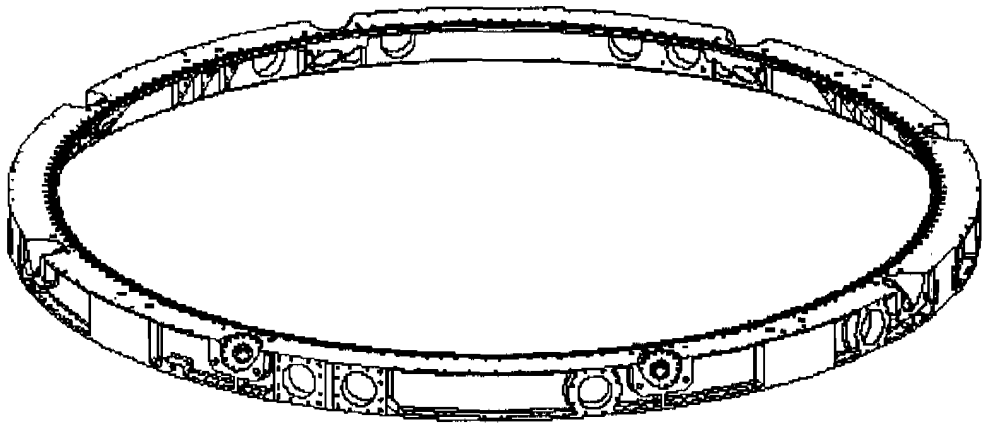

Figure 2. Upper Support Ring

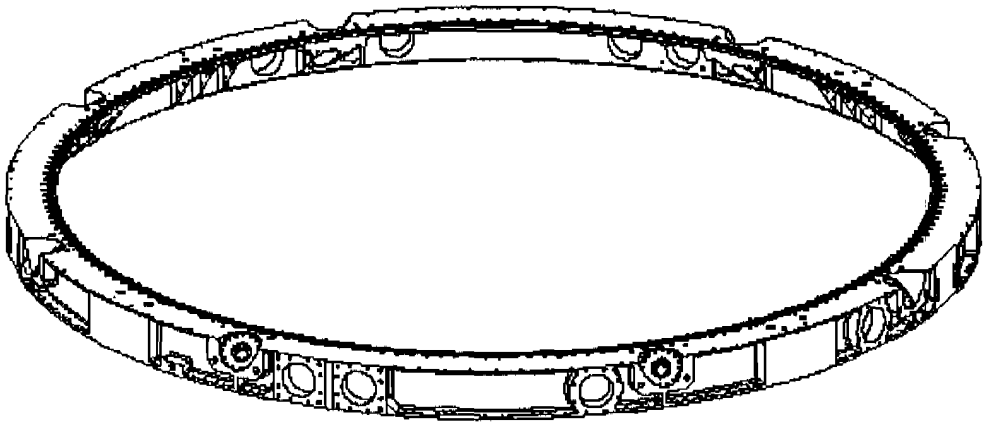

Figure 3. Lower Support Ring

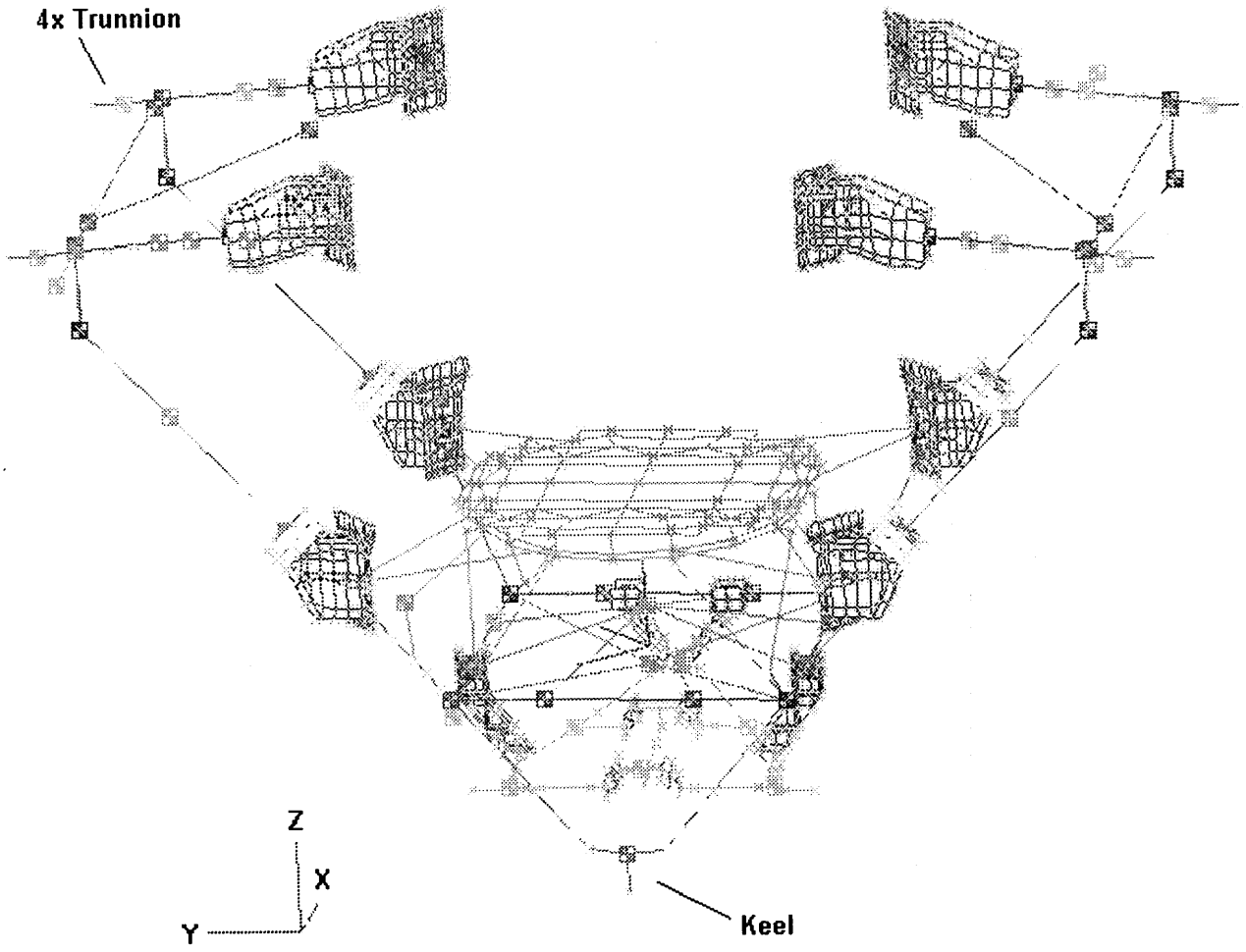

Figure 4. USS-02 Model

MODEL CHECKS:

The results of the Support Rings model check for the KGG, KNN, KAA and Six Rigid Body Modes and Weight are listed below:

MATRIX CHECK KGG - 6 X 6 SQUARE MATRIX

-1.5972D-06	-3.1791D-07	8.6282D-08	-7.0392D-06	-1.0779D-05	2.9280D-05
-1.0020D-06	-1.4864D-06	5.4602D-07	1.6210D-05	2.1070D-05	-2.2836D-06
4.8282D-08	1.8339D-07	4.0349D-06	-2.6387D-05	3.6033D-05	1.4187D-06
-5.9084D-06	1.4489D-05	3.1310D-05	5.9904D-03	2.4163D-03	1.1696D-03
3.8176D-07	5.6411D-06	1.1895D-04	-7.7771D-04	2.4313D-03	-4.4227D-04
2.7474D-05	-2.3449D-05	1.9045D-06	1.0187D-03	1.3170D-04	-5.6691D-03

MATRIX CHECK KNN - 6 X 6 SQUARE MATRIX

-2.6851D-06	2.5398D-07	4.2091D-07	-1.5351D-05	-7.1948D-07	1.9755D-04
2.8504D-06	4.8381D-07	-1.0300D-07	9.7787D-05	3.3754D-05	-2.7509D-06
2.1820D-07	3.3744D-07	6.1342D-06	1.1369D-04	2.5150D-05	-4.1168D-06
-1.6549D-05	3.2698D-05	-1.8229D-04	-6.2392D-03	-4.5831D-03	6.9793D-04
8.0342D-05	2.5311D-05	1.6122D-04	7.2350D-04	5.3212D-03	-4.6316D-03
8.7111D-05	1.3850D-05	5.2903D-06	9.5371D-04	-1.8196D-03	-1.1741D-02

MATRIX CHECK KAA - 6 X 6 SQUARE MATRIX

-2.6851D-06	2.5398D-07	4.2091D-07	-1.5351D-05	-7.1948D-07	1.9755D-04
2.8504D-06	4.8381D-07	-1.0300D-07	9.7787D-05	3.3754D-05	-2.7509D-06
2.1820D-07	3.3744D-07	6.1342D-06	1.1369D-04	2.5150D-05	-4.1168D-06
-1.6549D-05	3.2698D-05	-1.8229D-04	-6.2392D-03	-4.5831D-03	6.9793D-04
8.0342D-05	2.5311D-05	1.6122D-04	7.2350D-04	5.3212D-03	-4.6316D-03
8.7111D-05	1.3850D-05	5.2903D-06	9.5371D-04	-1.8196D-03	-1.1741D-02

MODEL CHECKS (Continued):

EIGENVALUE ANALYSIS SUMMARY

MODE NO.	EXTRACTION ORDER	EIGENVALUE	RADIANS	CYCLES	GENERALIZED MASS	GENERALIZED STIFFNESS
1	1	-6.077007E-04	2.465159E-02	3.923422E-03	1.000000E+00	-6.077007E-04
2	2	-4.343974E-04	2.084220E-02	3.317139E-03	1.000000E+00	-4.343974E-04
3	3	-1.359902E-04	1.166148E-02	1.855983E-03	1.000000E+00	-1.359902E-04
4	4	-1.832184E-05	4.280401E-03	6.812470E-04	1.000000E+00	-1.832184E-05
5	5	2.195145E-04	1.481602E-02	2.358043E-03	1.000000E+00	2.195145E-04
6	6	2.391567E-04	1.546469E-02	2.461282E-03	1.000000E+00	2.391567E-04
7	7	9.074410E+07	9.525970E+03	1.516105E+03	1.000000E+00	9.074410E+07
8	8	1.431702E+08	1.196538E+04	1.904349E+03	1.000000E+00	1.431702E+08

DIRECTION MASS AXIS SYSTEM (S)	MASS	X-C.G.	Y-C.G.	Z-C.G.
X	5.770055E+00	1.161679E-16	3.328969E-05	-3.891540E-04
Y	5.770055E+00	2.013338E-04	3.630246E-16	-3.891540E-04
Z	5.770055E+00	2.013338E-04	3.328969E-05	-1.724367E-16

I(S)

*	9.077288E+03	1.238237E+02	-6.767632E+01 *
*	1.238237E+02	8.710209E+03	-1.082884E+02 *
*	-6.767632E+01	-1.082884E+02	1.214923E+04 *

I(Q)

*	9.114795E+03		*
*		8.667973E+03	*
*			1.215396E+04 *

Q

*	9.553534E-01	2.947361E-01	2.074795E-02 *
*	-2.952691E-01	9.549214E-01	3.068088E-02 *
*	-1.076990E-02	-3.543731E-02	9.993139E-01 *

MASS CALCULATION 0F VC.DAT

$MVCP := 5.77006 \cdot 386.09 \cdot lbf$ $MVCP = 2228 \cdot lbf$

MASS and CG

Model Mass: 2228 lbf

Model CG: -0.47 in, -0.08 in, 0.06 in

Hardware Mass: 2384 lbf

Hardware CG: -0.60 in, -0.15 in, 0.11 in

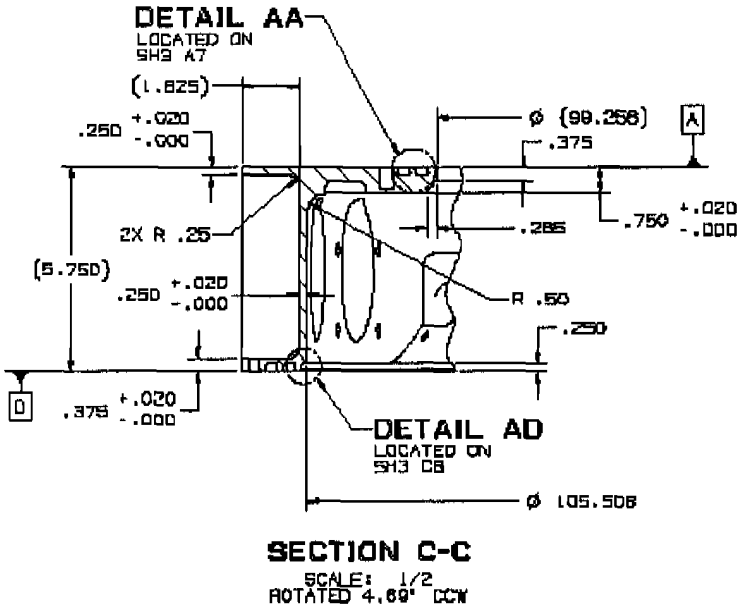

Figure 5. Example of Rings' "J" Section.

Table 1. Element Identification for Support Rings Finite Element Model.

Elements	Material ID	Property ID	Element ID
RBE's	Not Applicable	Not Applicable	300000-304999
Solid Elements attached to RBE's (Top R)	MAT 200002	PSOLID 200003	200000-219999
Solid Elements attached to RBE's (Bot R)	MAT 200002	PSOLID 200003	220000-239000
Gusset Plates (Top Ring)	MAT 200002	PSHELL 200004,-6,-8	240000-246999
Gusset Base Plates (Top Ring)	MAT 200002	PSHELL 200005	247000-249999
Gusset Plates (Bottom Ring)	MAT 200002	PSHELL 200004,-6,-8	250000-257999
Gusset Base Plates (Bottom Ring)	MAT 200002	PSHELL 200005	258000-259999
Solid Elements on the Top Ring	MAT 200002	PSOLID 200003	310000-349999
Solid Elements on the Bottom Ring	MAT 200002	PSOLID 200003	350000-399999

RESULTS:

The Contour Plots of the analysis results include high stresses at connections between RBE's and the solid elements. The stresses at these locations are not real. Nodes at these points displayed high stress values as a result of the infinite rigidity and the point attachment of the RBE element. Because the connections are not continuous in the math model, as they would be in an all-solid element model, the high stresses at these locations are artificial, and are not included in the strength calculations.

Prepared By	Name/Date M. Gutierrez /Jan-03	LOCKHEED MARTIN Science, Engineering, Analysis, & Test *Mechanical Systems Analysis Department*	Page No. 1.1.4-8	File Name
Checked By	2/11/03		Drawing No. SDG39135784	
Title	**Stress Analysis for Support Rings**			

PART: Upper Ring, SDG39135784

ANALYSIS: Tension and Shear

Load: Launch and Landing Load Factors and Atmospheric Pressure

STRESSES: Subcase 1016, Elem ID 335196, Ref. Page A-1

Minimum Principal Stress: $\sigma_{min} := 39700 \cdot psi$

Von Mises Stress: $\sigma_{von} := 37700 \cdot psi$

Max Shear: $\tau_{max} := 19300 \cdot psi$

Material: Al Alloy 7050-T7452, Rolled Ring Hand Forging, AMS 4108, 6.5 in to 6.75 in Thick
(Reference: MIL-HDBK-5H, Table 3.7.3.0(d), Page 3-313)

$Ftu := 65000 \cdot psi$ $Fty := 51000 \cdot psi$ $Fsu := 40000 \cdot psi$

Temperature Reduction: At 140 degF

$FTu := 0.92$, ultimate

$FTy := 0.98$, yield

Factor of Safety:

$FSu := 1.4$, ultimate

$FSy := 1.1$, yield

Margin of Safety:

$$MSu := \frac{Ftu \cdot FTu}{FSu \cdot \sigma_{min}} - 1 \qquad MSu = 0.076 \qquad \text{,ultimate}$$

$$MSy := \frac{Fty \cdot FTy}{FSy \cdot \sigma_{von}} - 1 \qquad MSy = 0.21 \qquad \text{,yield}$$

$$MSsu := \frac{Fsu \cdot FTu}{FSu \cdot \tau_{max}} - 1 \qquad MSsu = 0.36 \qquad \text{,shear ultimate}$$

Prepared By	Name/Date M. Gutierrez /Jan-03	LOCKHEED MARTIN Science, Engineering, Analysis, & Test *Mechanical Systems Analysis Department*	Page No. 1.1.4-9	File Name
Checked By	2/11/03		Drawing No. SDG39135785	
Title	**Stress Analysis for Support Rings**			

PART: Lower Ring, SDG39135785

ANALYSIS: Tension and Shear

Load: Launch and Landing Load Factors and Atmospheric Pressure

STRESSES: Subcase 2020, Elem ID 352047, Ref. Page A-2

Minimum Principal Stress: $\sigma_{min} := 41300 \cdot psi$

Von Mises Stress: $\sigma_{von} := 36600 \cdot psi$

Max Shear: $\tau_{max} := 20700 \cdot psi$

Material: Al Alloy 7050-T7452, Rolled Ring Hand Forging, AMS 4108, 6.5 in to 6.75 in Thick
(Reference: MIL-HDBK-5H, Table 3.7.3.0(d), Page 3-313)

$Ftu := 65000 \cdot psi$ $Fty := 51000 \cdot psi$ $Fsu := 40000 \cdot psi$

Temperature Reduction: At 140 degF

$FTu := 0.92$, ultimate

$FTy := 0.98$, yield

Factor of Safety:

$FSu := 1.4$, ultimate

$FSy := 1.1$, yield

Margin of Safety:

$$MSu := \frac{Ftu \cdot FTu}{FSu \cdot \sigma_{min}} - 1 \qquad MSu = 0.03 \qquad \text{,ultimate}$$

$$MSy := \frac{Fty \cdot FTy}{FSy \cdot \sigma_{von}} - 1 \qquad MSy = 0.24 \qquad \text{,yield}$$

$$MSsu := \frac{Fsu \cdot FTu}{FSu \cdot \tau_{max}} - 1 \qquad MSsu = 0.27 \qquad \text{,shear ultimate}$$

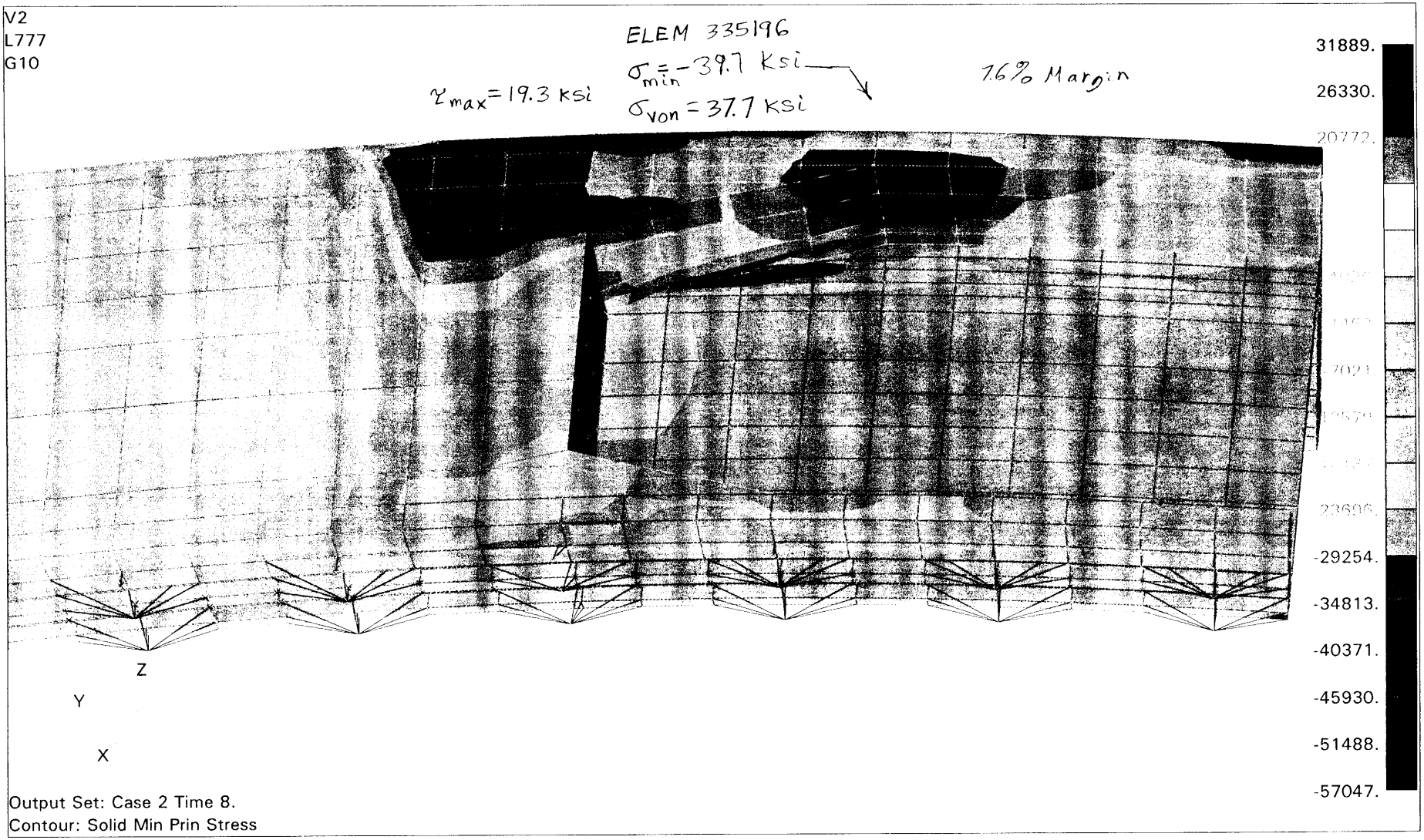
V2
L777
G10
ELEM 335196
σ_{min} = -39.7 ksi
σ_{von} = 37.7 ksi
τ_{max} = 19.3 ksi
7.6% Margin
31889.
26330.
20772.
-29254.
-34813.
-40371.
-45930.
-51488.
-57047.
Z
Y
X
Output Set: Case 2 Time 8.
Contour: Solid Min Prin Stress

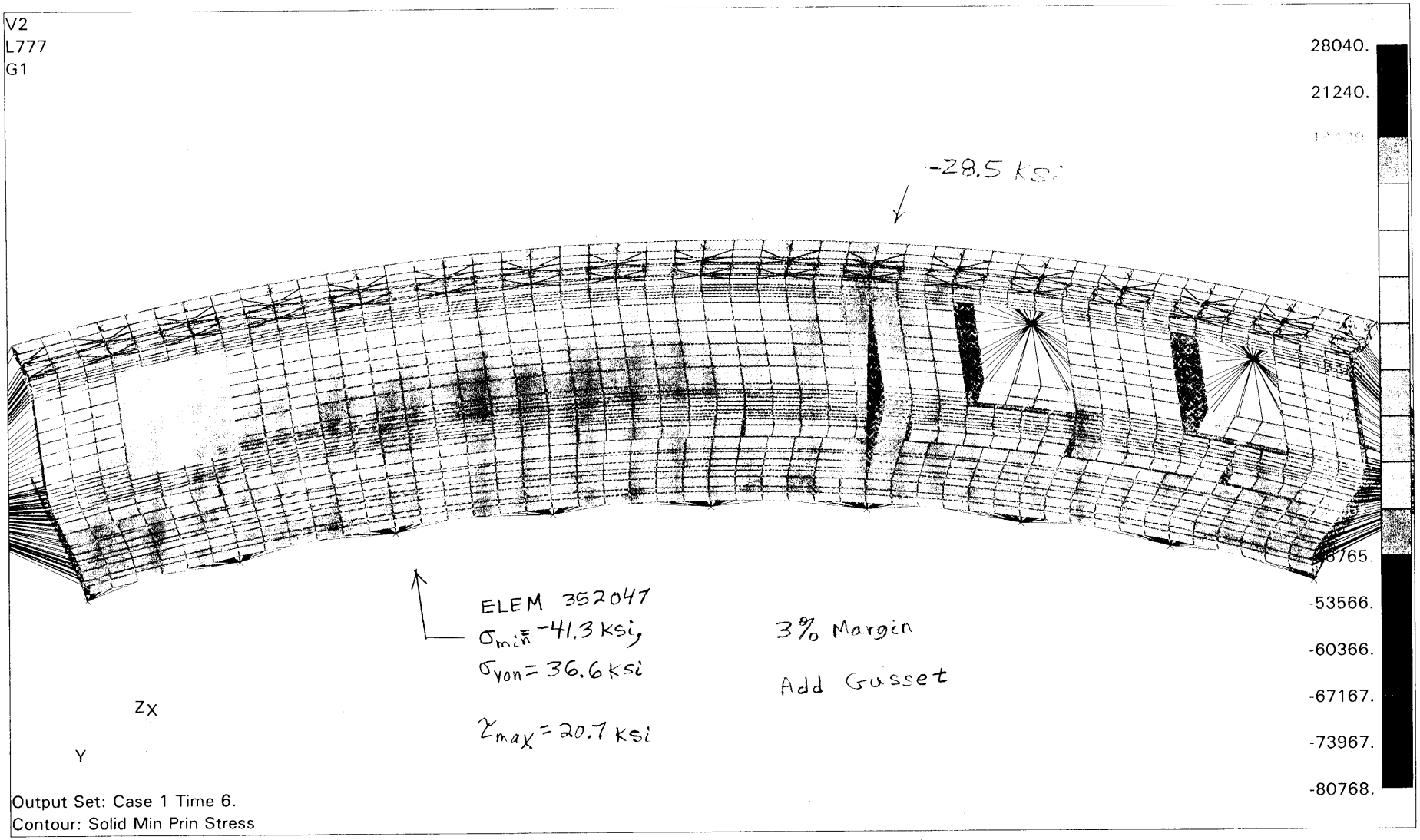
V2
L777
G1
28040.
21240.
-28.5 ksi
-53566.
-60366.
-67167.
-73967.
-80768.
ELEM 352047
σ_{min} = -41.3 ksi
σ_{von} = 36.6 ksi
τ_{max} = 20.7 ksi
3% Margin
Add Gusset
ZX
Y
Output Set: Case 1 Time 6.
Contour: Solid Min Prin Stress

Prepared By	Name/Date V.Bulsara / 3-3-03	LOCKHEED MARTIN	File Name sport.doc
Checked By	3/12/03	Science, Engineering, Analysis, & Test *Mechanical Systems Analysis Department*	Drawing No.
Title:	Analysis of Strap Port Model 6-02		

SUMMARY OF CRITICAL MARGINS OF SAFETY

Note:
1) *A = Axial, S = Shear, B = Buckling, Bg = Bending*
2) *In structural analysis, factors of safety are 1.4 and 1.1 for ultimate and yield loads, respectively*
3) *Margin of Safety that is greater than 3.0 is defined as High M.S.*
4) *U = Ultimate, Y = Yield*
5) *Allowables includes temperature red. factors of 0.92 and 0.98 for ultimate and yield, respectively*

Part Information				Structural Analysis				
Member	DWG. No.	Specification	Material	Load Type	Load or Stress		M.S.	Ref. Page
					Applied	Allowable		
Lower Port			7050-T7452	A, S, Bg	41201psi	65000 psi	0.04	1.1.4.1-10
Upper Port			7050-T7452	A, S, Bg	42558 psi	65000 psi	0.004	1.1.4.1-13

Prepared By	Name/Date V.Bulsara / 3-3-03	LOCKHEED MARTIN Science, Engineering, Analysis, & Test Mechanical Systems Analysis Department	File Name sport.doc
Checked By	3/12/03		Drawing No.
Title:	Analysis of Strap Port Model 6-02		

1. Introduction:

Figure 1 shows locations of Upper and Lower Strap Port models in Vacuum Case. The inner and outer views are shown in Figures 2 and 3.

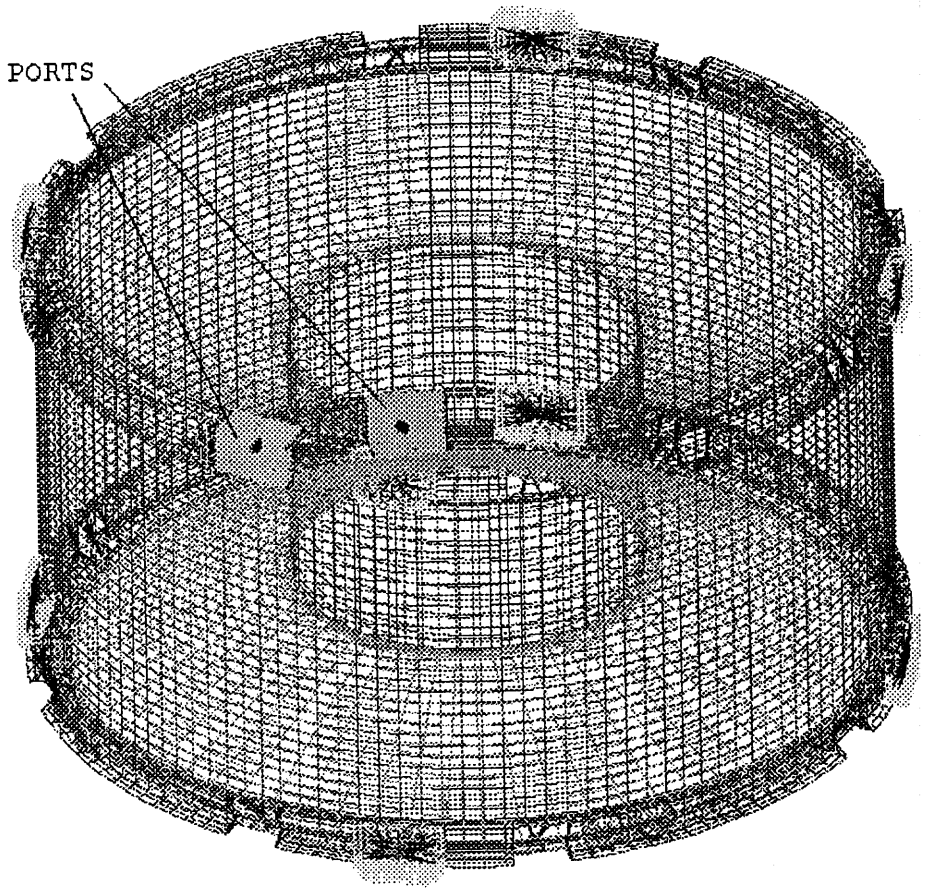

Figure 1. Location of Ports in Vacuum Case Model.

1. Introduction: (Cont'd)

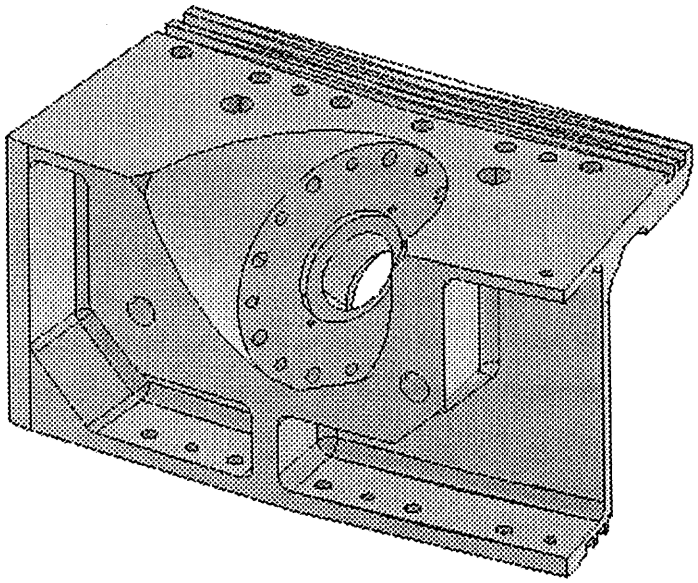

Figure 2. Outer View of Port

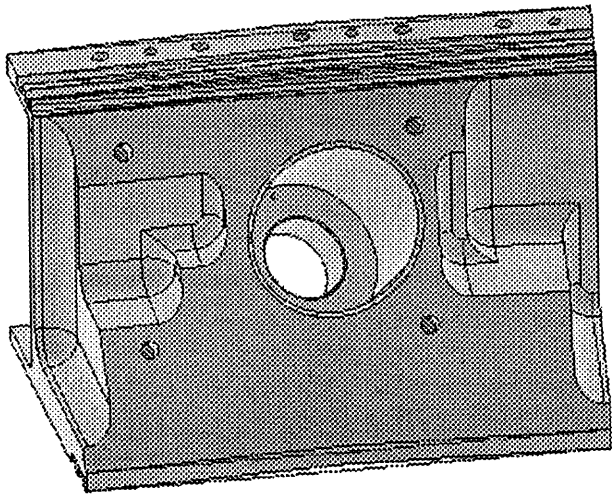

Figure 3. Inner View of Port

2. Method:

a. The Upper and Lower Strap Ports are imported in FEMAP V.8.0 from the parasolid models.

b. These ports are auto-meshed as 10-Noded CTETRA elements. Material is 7050-T7452 Aluminum.

i. For Upper Port: Node IDs: 200001 - 206055; Element IDs: 200001 - 203023.

ii. For Lower Port: Node IDs: 210001 - 215603; Element IDs: 210001 - 212828.

c. Their FEA math models are imported into the Upper and Lower Support Rings at correct locations in the Vacuum Case.

d. RBE3 elements with DOF(123) are used for connection between ports and Support Rings.

e. RBE2 elements with DOF(123456) are used for connection between ports and Conical Flanges and Outer Cylinder

f. External 1-atm pressure is applied on ports. The strap load is also included.

g. The entire AMS-02 model is analyzed by using MSC/NASTRAN V.70.7.

3. Model Information:

a. The NASTRAN data file is at: /hsm/phoang/ams2/sport/sport.blk.

b. The model check of Vacuum Case including Upper and Lower Strap Ports is performed. The results below show that the FEA math model is correct. NASTRAN output format is enclosed in Appendix A.

i. For matrix KGG:

RESULTS OF RIGID BODY CHECKS OF MATRIX KGG (G-SET) FOLLOW:
PRINT RESULTS IN ALL SIX DIRECTIONS AGAINST THE LIMIT OF 1.000000E-02

DIRECTION	STRAIN ENERGY	PASS/FAIL
1	1.982117E-07	PASS
2	5.984120E-07	PASS
3	3.928284E-07	PASS
4	2.112136E-04	PASS
5	9.516551E-06	PASS
6	1.578020E-04	PASS

ii. For matrix KNN:

RESULTS OF RIGID BODY CHECKS OF MATRIX KNN (N-SET) FOLLOW:
PRINT RESULTS IN ALL SIX DIRECTIONS AGAINST THE LIMIT OF 1.000000E-02

DIRECTION	STRAIN ENERGY	PASS/FAIL
1	9.397360E-08	PASS
2	2.078145E-07	PASS
3	4.518677E-07	PASS
4	4.667843E-04	PASS
5	8.409844E-05	PASS
6	4.956941E-05	PASS

iii.For matrix KFF:

RESULTS OF RIGID BODY CHECKS OF MATRIX KFF (F-SET) FOLLOW:
PRINT RESULTS IN ALL SIX DIRECTIONS AGAINST THE LIMIT OF 1.000000E-02

DIRECTION	STRAIN ENERGY	PASS/FAIL
1	9.397360E-08	PASS
2	2.078145E-07	PASS
3	4.518677E-07	PASS
4	4.667843E-04	PASS
5	8.409844E-05	PASS
6	4.956941E-05	PASS

3. Model Information: (Cont'd)

iv.Eigenvalue Summary: First six modes are zero; transition modes are well separated.

MODE NO.	EIGENVALUE	RADIANS	CYCLES	GENERALIZED MASS	GENERALIZED STIFFNESS
1	-3.16E-07	5.62E-04	8.94E-05	1.00E+00	-3.16E-07
2	-1.55E-07	3.94E-04	6.26E-05	1.00E+00	-1.55E-07
3	-7.67E-08	2.77E-04	4.41E-05	1.00E+00	-7.67E-08
4	3.58E-07	5.98E-04	9.52E-05	1.00E+00	3.58E-07
5	5.38E-07	7.34E-04	1.17E-04	1.00E+00	5.38E-07
6	7.73E-07	8.79E-04	1.40E-04	1.00E+00	7.73E-07
7	2.21E+05	4.71E+02	7.49E+01	1.00E+00	2.21E+05
8	3.40E+05	5.83E+02	9.28E+01	1.00E+00	3.40E+05
9	3.60E+05	6.00E+02	9.55E+01	1.00E+00	3.60E+05
10	3.87E+05	6.22E+02	9.90E+01	1.00E+00	3.87E+05

v. Weight Summary: (Total weight = 386.0886 * MASS = 386.0886 * 6.330856 = **2444.3 lbf**)

(The actual hardware weighs ???)

OUTPUT FROM WEIGHT CHECK

0 DEGREES OF FREEDOM SET = G

0 REFERENCE POINT = 0

M O

```
* 6.330856E+00  0.000000E+00  1.561251E-17 -1.776357E-14  2.483700E+03 -5.326309E+00 *
* 0.000000E+00  6.330856E+00  2.949030E-17 -2.483700E+03 -1.030287E-13 -4.700239E+00 *
* 1.561251E-17  2.949030E-17  6.330856E+00  5.326309E+00  4.700239E+00 -1.665335E-15 *
*-1.776357E-14 -2.483700E+03  5.326309E+00  9.846488E+05 -2.015738E+02  1.842119E+03 *
* 2.483700E+03 -1.030287E-13  4.700239E+00 -2.015738E+02  9.842820E+05 -2.027548E+03 *
*-5.326309E+00 -4.700239E+00 -1.665335E-15  1.842119E+03 -2.027548E+03  1.371200E+04 *
```

S

```
* 1.000000E+00  0.000000E+00  0.000000E+00 *
* 0.000000E+00  1.000000E+00  0.000000E+00 *
* 0.000000E+00  0.000000E+00  1.000000E+00 *
```

DIRECTION MASS AXIS	SYSTEM (S) MASS	X-C.G.	Y-C.G.	Z-C.G.
X	6.330856E+00	-2.805872E-15	8.413252E-01	3.923167E+02
Y	6.330856E+00	-7.424334E-01	-1.627405E-14	3.923167E+02
Z	6.330856E+00	-7.424334E-01	8.413252E-01	-2.630504E-16

I(S)

```
* 1.024710E+04  2.055282E+02  1.863037E+00 *
* 2.055282E+02  9.881369E+03 -6.205128E+01 *
* 1.863037E+00 -6.205128E+01  1.370403E+04 *
```

I(Q)

```
* 1.370505E+04                            *
*              9.788336E+03                *
*                           1.033912E+04 *
```

Q

```
* 1.507607E-03  4.087577E-01  9.126417E-01 *
*-1.630778E-02  9.125314E-01 -4.086814E-01 *
*-9.998659E-01 -1.426703E-02  8.041669E-03 *
```

3. Model Information: (Cont'd)

c. Additional model checks are based on the Trunion and Strap loads. These loads in Strap Port model for each load case are closely matched with those in the Load model. Tables 1 thru 4 show the comparision between these loads.

Load Case	STRAP FORCES (lbs)															
	90001	90002	90003	90004	90005	90006	90007	90008	90009	90010	90011	90012	90013	90014	90015	90016
1054	8693.0	4663.2	9597.1	7705.7	9624.2	1449.4	18915.6	1826.9	1334.3	1678.8	3257.1	12519.2	1016.4	1373.9	3258.7	11855.8
2056	6431.9	4316.4	11242.6	9315.9	3191.0	1321.9	22529.7	2613.6	1546.8	2298.1	1770.9	8217.0	1155.8	1393.3	2386.8	7145.6

Table 1. STRAP FORCES FROM LOAD MODEL 6-02

Load Case	STRAP FORCES (lbs)															
	90001	90002	90003	90004	90005	90006	90007	90008	90009	90010	90011	90012	90013	90014	90015	90016
1054	8786.5	4717.5	9716.9	7898.5	9588.7	1389.1	18610.8	1832.2	1334.1	1680.0	3168.0	12447.2	999.8	1367.2	3217.1	12102.4
2056	6507.5	4384.5	11381.9	9573.0	3153.6	1266.7	22189.7	2707.4	1547.6	2339.2	1764.6	8092.8	1137.7	1386.4	2307.8	7375.6

Table 2. STRAP FORCES FROM STRAP-PORT MODEL

Load Case	PERCENT DIFFERENCE IN STRAP FORCES (%)															
	90001	90002	90003	90004	90005	90006	90007	90008	90009	90010	90011	90012	90013	90014	90015	90016
1054	1.1	1.2	1.2	2.5	0.4	4.2	1.6	0.3	0.0	0.1	2.7	0.6	1.6	0.5	1.3	2.1
2056	1.2	1.6	1.2	2.8	1.2	4.2	1.5	3.6	0.1	1.8	0.4	1.5	1.6	0.5	3.3	3.2

Table 3. PERCENT DIFFERENCE IN STRAP FORCES BETWEEN LOAD MODEL AND STRAP-PORT MODEL

3. Model Information: (Cont'd)

	TRUNNION FORCES (lbs)							Differences					
ID	SUBCASE	From Load Model			From Strap-Port Model			FX		FY		FZ	
		FX	FY	FZ	FX	FY	FZ	(lbs)	(%)	(lbs)	(%)	(lbs)	(%)
1	1054	31759.1	0.0	-50372.5	32286.6	0.0	-50030.5	527.5	1.7	-	-	342.0	0.7
2	1054	53751.6	0.0	-46474.3	53856.1	0.0	-46817.8	104.5	0.2	-	-	343.5	0.7
3	1054	0.0	0.0	-123.6	0.0	0.0	18.6	-	-	-	-	142.2	115.1
4	1054	0.0	0.0	8459.3	0.0	0.0	8557.4	-	-	-	-	98.1	1.2
5	1054	0.0	24003.7	0.0	0.0	22988.5	0.0	-	-	1015.1	4.2	-	-
1	2056	23187.4	0.0	-22654.4	23724.8	0.0	-22296.7	537.3	2.3	-	-	357.8	1.6
2	2056	44309.0	0.0	-19643.3	44408.1	0.0	-20033.8	99.1	0.2	-	-	390.5	2.0
3	2056	0.0	0.0	-29166.7	0.0	0.0	-28968.2	-	-	-	-	198.6	0.7
4	2056	0.0	0.0	-26032.4	0.0	0.0	-25726.8	-	-	-	-	305.5	1.2
5	2056	0.0	29999.5	0.0	0.0	28985.5	0.0	-	-	1014.0	3.4	-	-

Table 4. CHECK OF TRUNNION LOADS

4. Load and Constraint:

The entire AMS-02 math model is constrained at five Trunion locations whose GRID IDs are 1 and 2 with DOF(13), 3 and 4 with DOF(3), and 5 with DOF(2).

A number of load cases under the launch and landing situations were investigated in order to indentify the worst load cases. Based on these investigation, the worst ones are load cases R1054 and R2056 under the launching situation.

The details of load factors for the worst cases are listed below. The load factors are applied at C.G. of the entire AMS-02 math model when running NASTRAN.

Load Case	Nx (g)	Ny (g)	Nz (g)	Rx (rad/sec^2)	Ry (rad/sec^2)	Rz (rad/sec^2)
1054	-5.7	-1.6	5.9	-10	25	-18
2056	-4.5	-2	6.5	-20	-35	-15

(Ref. Table 1, p. 14 of AMS-02 Structural Verification Plan for STS and ISS, JSC-28792, Rev. A)

5. Result:

Material Properties : 7050-T7452 AL (Ref. MIL-HDBK-5H, Table 3.7.3.0(d))

$F_{tu} := 65 \cdot 10^3 \cdot psi$

$F_{ty} := 51 \cdot 10^3 \cdot psi$

$F_{su} := 40 \cdot 10^3 \cdot psi$

Factor of Safety, $FS_u := 1.4$ $FS_y := 1.1$

Temperature reduction factor at 140° F,

$\gamma_u := 0.92$ $\gamma_y := 0.98$ *(Ref. MIL-HDBK-5H, Figure 3.7.3.2.1)*

5. Result: *(Cont'd)*

i. For Lower Port:

Maximum Von-Mises, principal, and shear stresses for load case 2056 in Lower Port respectively are :

$\sigma_{ly.max} := 52593.96 \cdot psi$ *(Ref. Appendix B, p. 1.1.4.1-23)*

$\sigma_{lu.max} := 64534.77 \cdot psi$ *(Ref. Appendix B, p. 1.1.4.1-24)*

$\sigma_{ls.max} := 29540.61 \cdot psi$ *(Ref. Appendix B, p. 1.1.4.1-25)*

Stress contour plots are shown in Figures 4 and 5.

Pages 1.1.4.1-23 to 1.1.4.1-25 shows the stress values sorted by NASPOST V.2.1. Those elements that had a node involved in an RBE type connection were not considered in the margin of safety calculations.

Therefore, the following stresses are recorded:

$\sigma_{ly} := 37949.83 \cdot psi$ *(Ref. Appendix B, p. 1.1.4.1-23, element 210816)*

$\sigma_{lu} := 41201.31 \cdot psi$ *(Ref. Appendix B, p.1.1.4.1-24, element 210858)*

$\sigma_{ls} := 20046.50 \cdot psi$ *(Ref. Appendix B, p.1.1.4.1-25, element 210816)*

Margins of Safety, $MS_y := \frac{F_{ty} \cdot \gamma_y}{FS_y \cdot \sigma_{ly}} - 1$ $MS_y = 0.2$

$MS_u := \frac{F_{tu} \cdot \gamma_u}{FS_u \cdot \sigma_{lu}} - 1$ $MS_u = 0.04$

$MS_s := \frac{F_{su} \cdot \gamma_u}{FS_u \cdot \sigma_{ls}} - 1$ $MS_s = 0.31$

5i. For Lower Port: (Cont'd)

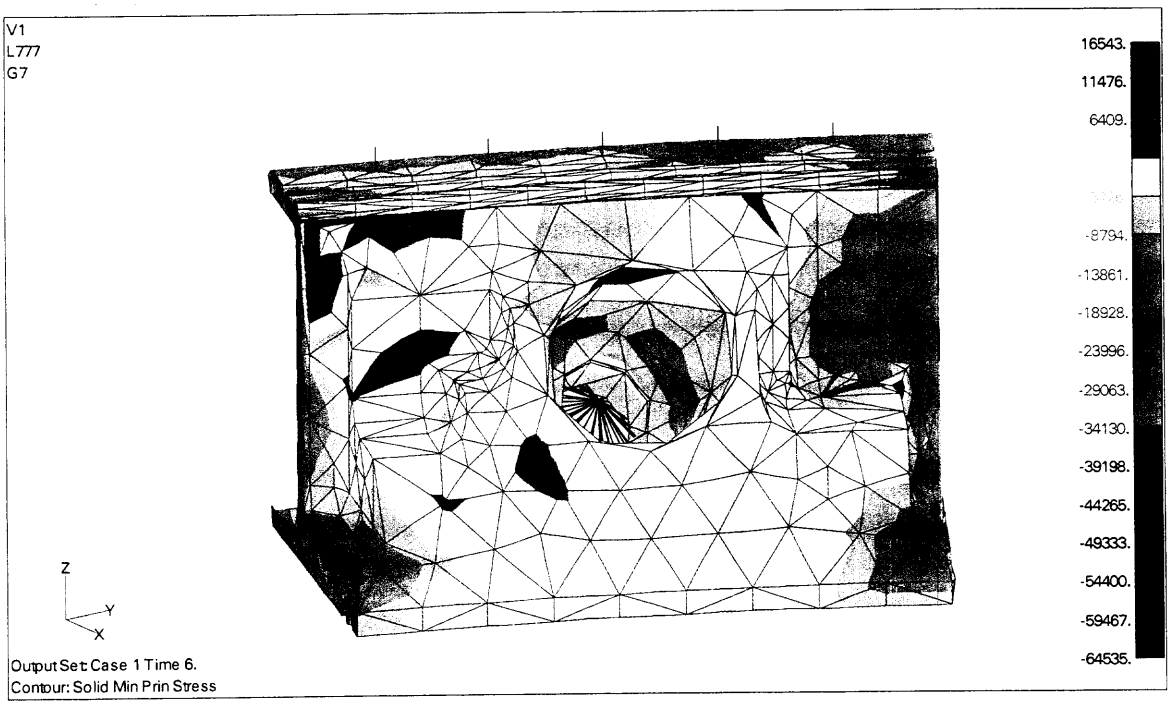

Figure 5. Lower Port : Maximum Min-Principal Stress

5. Result: *(Cont'd)*

ii. For Upper Port:

Maximum Von-Mises, principal, and shear stresses occurred for load case 1054 in the Upper Port. NASPOST V.2.1 is used to sort out stresses within load case R1054

$\sigma_{uy.max} := 151579.8 \cdot psi$ *(Ref. Appendix B, p. 1.1.4.1-26)*

$\sigma_{uu.max} := 117470.3 \cdot psi$ *(Ref. Appendix B, p. 1.1.4.1-30)*

$\sigma_{us.max} := 87207.87 \cdot psi$ *(Ref. Appendix B, p. 1.1.4.1-35)*

Stress contour plots are shown in Figures 6 and 7.

Pages 1.1.4.1-26 thru 1.1.4.1-37shows the stress values sorted by NASPOST V.2.1. Those elements having a node involved in an RBE type connection were not used in the margin of safety calculation. Also, elements that were located in corners or edges with excessive stresses were not used in the margin of safety calculation. The fillets or rounds at these corners/edges were not incorporated in the finite element model leading to higher than reasonably expected stresses.

Therefore, the following stresses are recorded:

$\sigma_{uy} := 44105.01 \cdot psi$ *(Ref. Appendix B, p. 1.1.4.1-29, element 201217)*

$\sigma_{uu} := 42557.66\ psi$ *(Ref. Appendix B, p. 1.1.4.1-34, element 200156)*

$\sigma_{us} := 25733.80\ psi$ *(Ref. Appendix B, p. 1.1.4.1-37, element 201921)*

Margins of Safety, $MS_y := \frac{F_{ty} \cdot \gamma_y}{FS_y \cdot \sigma_{uy}} - 1$ $MS_y = 0.03$

$MS_u := \frac{F_{tu} \cdot \gamma_u}{FS_u \cdot \sigma_{uu}} - 1$ $MS_u = 3.68 \cdot 10^{-3}$

$MS_s := \frac{F_{su} \cdot \gamma_u}{FS_u \cdot \sigma_{us}} - 1$ $MS_s = 0.02$

APPENDIX A

Details of Model Check

OUTPUT FROM WEIGHT CHECK
DEGREES OF FREEDOM SET = G
REFERENCE POINT = 0

MO

```
* 6.330856E+00  0.000000E+00  1.561251E-17 -1.776357E-14  2.483700E+03 -5.326309E+00 *
* 0.000000E+00  6.330856E+00  2.949030E-17 -2.483700E+03 -1.030287E-13 -4.700239E+00 *
* 1.561251E-17  2.949030E-17  6.330856E+00  5.326309E+00  4.700239E+00 -1.665335E-15 *
*-1.776357E-14 -2.483700E+03  5.326309E+00  9.846488E+05 -2.015738E+02  1.842119E+03 *
* 2.483700E+03 -1.030287E-13  4.700239E+00 -2.015738E+02  9.842820E+05 -2.027548E+03 *
*-5.326309E+00 -4.700239E+00 -1.665335E-15  1.842119E+03 -2.027548E+03  1.371200E+04 *
```

S

```
*  1.000000E+00  0.000000E+00  0.000000E+00 *
*  0.000000E+00  1.000000E+00  0.000000E+00 *
*  0.000000E+00  0.000000E+00  1.000000E+00 *
```

DIRECTION MASS AXIS SYSTEM (S)	MASS	X-C.G.	Y-C.G.	Z-C.G.
X	6.330856E+00	-2.805872E-15	8.413252E-01	3.923167E+02
Y	6.330856E+00	-7.424334E-01	-1.627405E-14	3.923167E+02
Z	6.330856E+00	-7.424334E-01	8.413252E-01	-2.630504E-16

I(S)

```
*  1.024710E+04  2.055282E+02  1.863037E+00 *
*  2.055282E+02  9.881369E+03 -6.205128E+01 *
*  1.863037E+00 -6.205128E+01  1.370403E+04 *
```

I(Q)

```
*  1.370505E+04                            *
*                9.788336E+03              *
*                             1.033912E+04 *
```

Q

```
*  1.507607E-03  4.087577E-01  9.126417E-01 *
* -1.630778E-02  9.125314E-01 -4.086814E-01 *
* -9.998659E-01 -1.426703E-02  8.041569E-03 *
```

0
0

*** USER INFORMATION MESSAGE 7570 (GPWG1D)
RESULTS OF RIGID BODY CHECKS OF MATRIX KGG (G-SET) FOLLOW
PRINT RESULTS IN ALL SIX DIRECTIONS AGAINST THE LIMIT OF 1.000000E-02

DIRECTION	STRAIN ENERGY	PASS/FAIL
1	1.982117E-07	PASS
2	5.984120E-07	PASS
3	3.928284E-07	PASS
4	2.112136E-04	PASS
5	9.516551E-06	PASS
6	1.578020E-04	PASS

SOME POSSIBLE REASONS MAY LEAD TO THE FAILURE:
1. CELAS1 ELEMENTS CONNECTING TO ONLY ONE GRID POINT;
2. CELAS1 ELEMENTS CONNECTING TO NON-COINCIDENT POINTS;
3. CELAS1 ELEMENTS CONNECTING TO NON-COLINEAR DOF;
4. IMPROPERLY DEFINED DMIG MATRICES;

0
0

*** USER INFORMATION MESSAGE 7570 (GPWG1D)
RESULTS OF RIGID BODY CHECKS OF MATRIX KNN (N-SET) FOLLOW
PRINT RESULTS IN ALL SIX DIRECTIONS AGAINST THE LIMIT OF 1.000000E-02

DIRECTION	STRAIN ENERGY	PASS/FAIL
1	9.397360E-08	PASS
2	2.078145E-07	PASS
3	4.518577E-07	PASS
4	4.867843E-04	PASS
5	8.409844E-06	PASS
6	4.966941E-06	PASS

SOME POSSIBLE REASONS MAY LEAD TO THE FAILURE:
1. MULTIPOINT CONSTRAINT EQUATIONS WHICH DO NOT SATISFY RIGID-BODY MOTION;
2. RBE3 ELEMENTS FOR WHICH THE INDEPENDENT DEGREE-OF-FREEDOM CANNOT DESCRIBE ALL POSSIBLE RIGID-BODY MOTIONS.

0
0

*** USER INFORMATION MESSAGE 7570 (GPWG1D)
RESULTS OF RIGID BODY CHECKS OF MATRIX KFF (F-SET) FOLLOW
PRINT RESULTS IN ALL SIX DIRECTIONS AGAINST THE LIMIT OF 1.000000E-02

DIRECTION	STRAIN ENERGY	PASS/FAIL
1	9.397360E-08	PASS
2	2.078145E-07	PASS
3	4.518677E-07	PASS
4	4.867843E-04	PASS
5	8.409844E-05	PASS
6	4.956941E-05	PASS

SOME POSSIBLE REASONS MAY LEAD TO THE FAILURE:
1. CONSTRAINTS WHICH PREVENT RIGID BODY MOTION

0

REAL EIGENVALUES

MODE NO.	EXTRACTION ORDER	EIGENVALUE	RADIANS	CYCLES	GENERALIZED MASS	GENERALIZED STIFFNESS
1	1	-3.155369E-07	5.617258E-04	8.940144E-05	1.000000E+00	-3.155369E-07
2	2	-1.548860E-07	3.935566E-04	6.263633E-05	1.000000E+00	-1.548860E-07
3	3	-7.867643E-08	2.769061E-04	4.407081E-05	1.000000E+00	-7.867643E-08
4	4	3.575923E-07	5.979902E-04	9.517310E-05	1.000000E+00	3.575923E-07
5	5	5.384248E-07	7.337743E-04	1.167838E-04	1.000000E+00	5.384248E-07
6	6	7.730475E-07	8.792312E-04	1.399340E-04	1.000000E+00	7.730475E-07
7	7	2.214459E+05	4.706804E+02	7.489519E+01	1.000000E+00	2.214459E+05
8	8	3.401481E+05	5.832222E+02	9.282269E+01	1.000000E+00	3.401481E+05
9	9	3.599042E+05	5.999202E+02	9.548026E+01	1.000000E+00	3.599042E+05
10	10	3.871949E+05	6.222499E+02	9.903414E+01	1.000000E+00	3.871949E+05

```
$TITLE  =                                                    1
$SUBTITLE=                                                   2
$LABEL  = INERTIAL LOADS/LANDING                             3
$SPCF                                                        4
$REAL OUTPUT                                                 5
$SUBCASE ID =      1054                                      6
      1     G    3.228659E+04    0.000000E+00   -5.003053E+04    7
-CONT-           0.000000E+00    0.000000E+00    0.000000E+00    8
      2     G    5.385608E+04    0.000000E+00   -4.681780E+04    9
-CONT-           0.000000E+00    0.000000E+00    0.000000E+00   10
      3     G    0.000000E+00    0.000000E+00    1.862313E+01   11
-CONT-           0.000000E+00    0.000000E+00    0.000000E+00   12
      4     G    0.000000E+00    0.000000E+00    8.557398E+03   13
-CONT-           0.000000E+00    0.000000E+00    0.000000E+00   14
      5     G    0.000000E+00    2.298853E+04    0.000000E+00   15
-CONT-           0.000000E+00    0.000000E+00    0.000000E+00   16
$TITLE  =                                                   17
$SUBTITLE=                                                  18
$LABEL  = INERTIAL LOADS/LANDING                            19
$ELEMENT FORCES                                             20
$REAL OUTPUT                                                21
$SUBCASE ID =      1054                                     22
$ELEMENT TYPE =       1                                     23
   90001        8.786510E+03    0.000000E+00                24
   90002        4.717470E+03    0.000000E+00                25
   90003        9.716886E+03    0.000000E+00                26
   90004        7.898464E+03    0.000000E+00                27
   90005        9.588676E+03    0.000000E+00                28
   90006        1.389050E+03    0.000000E+00                29
   90007        1.861082E+04    0.000000E+00                30
   90008        1.832169E+03    0.000000E+00                31
   90009        1.334068E+03    0.000000E+00                32
   90010        1.680007E+03    0.000000E+00                33
   90011        3.167956E+03    0.000000E+00                34
   90012        1.244721E+04    0.000000E+00                35
   90013        9.997841E+02    0.000000E+00                36
   90014        1.367232E+03    0.000000E+00                37
   90015        3.217072E+03    0.000000E+00                38
   90016        1.210236E+04    0.000000E+00                39
```

```
$TITLE  =                                                    1
$SUBTITLE=                                                   2
$LABEL  = INERTIAL LOADS/LANDING                             3
$SPCF                                                        4
$REAL OUTPUT                                                 5
$SUBCASE ID =      2056                                      6
      1     G    2.372477E+04    0.000000E+00   -2.229666E+04    7
-CONT-             0.000000E+00    0.000000E+00    0.000000E+00    8
      2     G    4.440809E+04    0.000000E+00   -2.003381E+04    9
-CONT-             0.000000E+00    0.000000E+00    0.000000E+00   10
      3     G    0.000000E+00    0.000000E+00   -2.896818E+04   11
-CONT-             0.000000E+00    0.000000E+00    0.000000E+00   12
      4     G    0.000000E+00    0.000000E+00   -2.572683E+04   13
-CONT-             0.000000E+00    0.000000E+00    0.000000E+00   14
      5     G    0.000000E+00    2.898552E+04    0.000000E+00   15
-CONT-             0.000000E+00    0.000000E+00    0.000000E+00   16
$TITLE  =                                                   17
$SUBTITLE=                                                  18
$LABEL  = INERTIAL LOADS/LANDING                            19
$ELEMENT FORCES                                             20
$REAL OUTPUT                                                21
$SUBCASE ID =      2056                                     22
$ELEMENT TYPE =       1                                     23
   90001         6.507479E+03    0.000000E+00               24
   90002         4.384470E+03    0.000000E+00               25
   90003         1.138188E+04    0.000000E+00               26
   90004         9.573043E+03    0.000000E+00               27
   90005         3.153559E+03    0.000000E+00               28
   90006         1.266689E+03    0.000000E+00               29
   90007         2.218970E+04    0.000000E+00               30
   90008         2.707372E+03    0.000000E+00               31
   90009         1.547631E+03    0.000000E+00               32
   90010         2.339230E+03    0.000000E+00               33
   90011         1.764567E+03    0.000000E+00               34
   90012         8.092753E+03    0.000000E+00               35
   90013         1.137705E+03    0.000000E+00               36
   90014         1.386404E+03    0.000000E+00               37
   90015         2.307758E+03    0.000000E+00               38
   90016         7.375550E+03    0.000000E+00               39
```

APPENDIX B

Results of NASPOST V.2.1

```
### FILES '/hsm/phoang/ams2/sport/R2056.pch'
### $
### SELECT TETRA-STRESSES
###   SORT VAR = MAX-VONM;OPT=12
###   PRINT 36 48 54 42;
###   HEADING = 'CTETRA: MAX. VON-MISES STRESS';
###   NCASES = 100
```


+++ CTETRA: MAX. VON-MISES STRESS +++

ID	SUBCASE	MAX-VONM	MAX-MAX-PRIN	MAX-MIN-PRIN	MAX-MAX-SHR
210900	2056	5.259396E+04	2.735358E+04	5.052307E+04	2.954061E+04
210944	2056	5.154397E+04	9.968668E+03	6.453477E+04	2.788870E+04
211175	2056	5.144375E+04	3.799166E+04	2.089371E+04	2.944269E+04
211453	2056	4.696348E+04	2.632358E+04	5.230913E+04	2.589259E+04
211607	2056	4.555109E+04	1.112196E+04	5.083541E+04	2.514579E+04
211758	2056	4.454851E+04	3.120616E+04	5.362336E+04	2.483281E+04
211816	2056	4.429445E+04	5.195070E+04	2.797519E+04	2.510558E+04
211097	2056	4.402795E+04	8.388643E+03	5.207025E+04	2.287233E+04
212514	2056	4.384823E+04	3.245226E+04	5.563405E+04	2.365309E+04
212307	2056	4.278525E+04	4.030189E+04	3.949189E+04	2.465979E+04
210281	2056	4.024919E+04	7.081573E+03	5.035098E+04	2.163470E+04
211613	2056	3.927039E+04	3.582047E+04	2.142389E+04	2.264107E+04
212590	2056	3.846286E+04	4.925349E+04	9.728522E+03	2.075626E+04
210903	2056	3.841817E+04	3.224016E+04	4.782855E+04	2.064694E+04
211614	2056	3.834929E+04	3.498678E+04	2.958956E+04	2.214093E+04
211712	2056	3.821512E+04	2.889051E+04	4.805255E+04	2.052942E+04
210816	**2056**	**3.794983E+04**	**4.912807E+03**	**3.877510E+04**	**2.004650E+04**

```
   ### SELECT TETRA-STRESSES
   ###  SORT VAR = MAX(MAX-MAX-PRIN,MAX-MIN-PRIN);OPT=12
   ###  PRINT 36 48 54 42;
   ###  HEADING = 'CTETRA: MAX. PRINCIPAL STRESS';
   ###  NCASES = 100
```


+++ CTETRA: MAX. PRINCIPAL STRESS +++

ID	SUBCASE	MAX-VONM	MAX-MAX-PRIN	MAX-MIN-PRIN	MAX-MAX-SHR
210944	2056	5.154397E+04	9.968668E+03	6.453477E+04	2.788870E+04
212514	2056	4.384823E+04	3.245226E+04	5.563405E+04	2.365309E+04
211758	2056	4.454851E+04	3.120616E+04	5.362336E+04	2.483281E+04
211453	2056	4.696348E+04	2.632358E+04	5.230913E+04	2.589259E+04
211097	2056	4.402795E+04	8.388643E+03	5.207025E+04	2.287233E+04
211816	2056	4.429445E+04	5.195070E+04	2.797519E+04	2.510558E+04
211607	2056	4.555109E+04	1.112196E+04	5.083541E+04	2.514579E+04
210900	2056	5.259396E+04	2.735358E+04	5.052307E+04	2.954061E+04
210281	2056	4.024919E+04	7.081573E+03	5.035098E+04	2.163470E+04
212590	2056	3.846286E+04	4.925349E+04	9.728522E+03	2.075626E+04
211712	2056	3.821512E+04	2.889051E+04	4.805255E+04	2.052942E+04
210903	2056	3.841817E+04	3.224016E+04	4.782855E+04	2.064694E+04
211857	2056	3.440759E+04	1.509096E+04	4.690442E+04	1.928856E+04
211975	2056	2.879758E+04	2.662464E+04	4.556055E+04	1.484122E+04
212201	2056	3.470278E+04	1.633604E+04	4.465001E+04	1.900638E+04
212058	2056	3.715110E+04	9.721149E+03	4.336618E+04	2.081334E+04
211067	2056	3.074450E+04	3.194075E+04	4.159750E+04	1.704851E+04
210858	**2056**	**3.658523E+04**	**4.065781E+03**	**4.120131E+04**	**1.856776E+04**

```
### SELECT TETRA-STRESSES
###  SORT VAR = MAX(MAX-MAX-SHR);OPT=12
###  PRINT 36 48 54 42;
###  HEADING = 'CTETRA: MAX. SHEAR STRESS';
###  NCASES = 100
```


+++ CTETRA: MAX. SHEAR STRESS +++

ID	SUBCASE	MAX-VONM	MAX-MAX-PRIN	MAX-MIN-PRIN	MAX-MAX-SHR
210900	2056	5.259396E+04	2.735358E+04	5.052307E+04	2.954061E+04
211175	2056	5.144375E+04	3.799166E+04	2.089371E+04	2.944269E+04
210944	2056	5.154397E+04	9.968668E+03	6.453477E+04	2.788870E+04
211453	2056	4.696348E+04	2.632358E+04	5.230913E+04	2.589259E+04
211607	2056	4.555109E+04	1.112196E+04	5.083541E+04	2.514579E+04
211816	2056	4.429445E+04	5.195070E+04	2.797519E+04	2.510558E+04
211758	2056	4.454851E+04	3.120616E+04	5.362336E+04	2.483281E+04
212307	2056	4.278525E+04	4.030189E+04	3.949189E+04	2.465979E+04
212514	2056	4.384823E+04	3.245226E+04	5.563405E+04	2.365309E+04
211097	2056	4.402795E+04	8.388643E+03	5.207025E+04	2.287233E+04
211613	2056	3.927039E+04	3.582047E+04	2.142389E+04	2.264107E+04
211614	2056	3.834929E+04	3.498678E+04	2.958956E+04	2.214093E+04
210281	2056	4.024919E+04	7.081573E+03	5.035098E+04	2.163470E+04
210510	2056	3.746538E+04	2.784141E+04	1.657698E+04	2.158186E+04
212058	2056	3.715110E+04	9.721149E+03	4.336618E+04	2.081334E+04
212590	2056	3.846286E+04	4.925349E+04	9.728522E+03	2.075626E+04
210903	2056	3.841817E+04	3.224016E+04	4.782855E+04	2.064694E+04
211712	2056	3.821512E+04	2.889051E+04	4.805255E+04	2.052942E+04
212637	2056	3.579022E+04	3.394622E+04	1.456415E+04	2.026786E+04
210280	2056	3.476392E+04	2.277996E+04	2.449686E+04	2.005922E+04
210816	**2056**	**3.794983E+04**	**4.912807E+03**	**3.877510E+04**	**2.004650E+04**

```
### FILES '/hsm/phoang/ams2/sport/R1054.pch'
### $
### SELECT TETRA-STRESSES
###   SORT VAR = MAX-VONM;OPT=12
###   PRINT 36 48 54 42;
###   HEADING = 'CTETRA: MAX. VON-MISES STRESS';
###   NCASES = 150
```


+++ CTETRA: MAX. VON-MISES STRESS +++

ID	SUBCASE	MAX-VONM	MAX-MAX-PRIN	MAX-MIN-PRIN	MAX-MAX-SHR
202217	1054	1.515798E+05	1.174703E+05	6.547394E+04	8.720787E+04
202883	1054	1.170990E+05	4.295967E+04	9.771110E+04	6.695930E+04
200267	1054	1.005514E+05	5.721918E+04	5.886902E+04	5.804410E+04
200636	1054	8.650958E+04	4.959289E+04	9.075273E+04	4.993664E+04
201485	1054	8.227761E+04	4.431431E+04	8.947968E+04	4.749695E+04
200734	1054	7.641551E+04	4.086730E+04	6.148069E+04	4.406019E+04
202332	1054	7.510269E+04	8.676226E+04	6.706595E+04	4.202872E+04
201866	1054	7.425544E+04	4.187514E+04	4.389479E+04	4.245940E+04
202055	1054	6.499153E+04	2.411203E+04	5.331124E+04	3.741296E+04
201375	1054	6.357211E+04	4.222753E+04	3.298061E+04	3.669646E+04
200860	1054	6.354695E+04	5.944557E+04	7.784032E+04	3.313810E+04
201312	1054	6.293714E+04	4.287193E+04	4.971270E+04	3.631421E+04
202425	1054	6.097699E+04	1.076386E+04	6.660849E+04	3.211523E+04
200897	1054	5.898184E+04	1.166302E+04	6.809338E+04	3.183047E+04
202743	1054	5.878958E+04	9.316934E+03	6.512291E+04	3.077734E+04
201860	1054	5.825238E+04	2.144727E+04	6.137911E+04	3.048648E+04
201670	1054	5.703159E+04	1.696582E+04	4.626642E+04	3.161612E+04
200865	1054	5.625383E+04	2.099273E+04	4.940111E+04	2.970946E+04
201837	1054	5.604580E+04	2.862428E+04	3.574546E+04	3.218487E+04
201864	1054	5.543190E+04	2.708578E+04	3.689606E+04	3.199092E+04
202253	1054	5.540527E+04	4.820444E+04	2.087362E+04	3.056340E+04
201416	1054	5.479191E+04	1.907836E+04	5.654938E+04	2.808040E+04
201987	1054	5.474004E+04	2.356317E+04	4.141754E+04	3.155046E+04

+++ CTETRA: MAX. VON-MISES STRESS +++

ID	SUBCASE	MAX-VONM	MAX-MAX-PRIN	MAX-MIN-PRIN	MAX-MAX-SHR
200702	1054	5.457907E+04	2.646537E+04	6.360204E+04	2.823155E+04
202691	1054	5.433587E+04	4.822972E+04	1.747143E+04	2.985046E+04
200456	1054	5.417550E+04	1.159456E+04	6.872663E+04	2.856603E+04
201767	1054	5.378140E+04	2.699824E+04	5.954132E+04	3.006917E+04
201317	1054	5.362081E+04	2.332659E+04	5.849763E+04	2.953629E+04
200311	1054	5.360834E+04	1.186598E+04	5.361561E+04	2.867760E+04
200866	1054	5.356495E+04	2.564388E+04	3.879049E+04	3.092551E+04
202517	1054	5.347619E+04	7.334784E+03	5.989495E+04	2.772289E+04
202162	1054	5.334706E+04	4.948752E+04	1.910122E+04	2.956832E+04
200847	1054	5.316318E+04	1.967831E+04	3.973686E+04	2.970758E+04
202621	1054	5.271295E+04	4.997951E+04	9.953226E+03	2.996637E+04
202354	1054	5.184368E+04	4.653542E+04	1.122037E+04	2.775365E+04
202809	1054	5.181127E+04	9.005770E+03	5.810413E+04	2.673210E+04
200752	1054	5.177062E+04	1.231153E+04	6.110482E+04	2.775859E+04
202412	1054	5.163786E+04	8.443156E+03	4.967690E+04	2.714124E+04
200751	1054	5.141144E+04	2.035358E+04	6.128119E+04	2.811330E+04
201979	1054	5.137324E+04	6.925859E+04	3.673467E+04	2.831508E+04
201352	1054	5.122947E+04	3.483759E+04	2.553501E+04	2.948237E+04
200440	1054	5.121828E+04	4.200234E+03	5.255298E+04	2.700537E+04
202104	1054	5.120950E+04	2.138755E+04	5.391369E+04	2.684740E+04
202796	1054	5.114905E+04	7.849641E+03	6.045282E+04	2.630159E+04
200269	1054	5.088761E+04	4.890043E+04	5.984928E+04	2.663373E+04
200527	1054	5.054515E+04	1.111308E+04	5.392534E+04	2.697183E+04

+++ CTETRA: MAX. VON-MISES STRESS +++

ID	SUBCASE	MAX-VONM	MAX-MAX-PRIN	MAX-MIN-PRIN	MAX-MAX-SHR
201555	1054	5.047480E+04	1.166234E+04	5.087049E+04	2.781246E+04
202888	1054	5.029860E+04	1.143688E+04	4.429488E+04	2.786588E+04
202576	1054	4.937514E+04	1.856990E+04	4.679577E+04	2.589936E+04
200278	1054	4.930827E+04	1.820695E+04	6.310694E+04	2.543604E+04
201741	1054	4.919385E+04	6.706398E+03	4.696763E+04	2.683701E+04
202554	1054	4.908027E+04	1.515803E+04	4.687419E+04	2.560334E+04
202159	1054	4.904669E+04	2.816673E+04	3.596973E+04	2.750612E+04
202569	1054	4.869696E+04	9.191743E+03	4.654047E+04	2.467852E+04
202563	1054	4.857166E+04	1.517800E+04	3.969111E+04	2.663412E+04
201569	1054	4.837640E+04	2.703588E+04	4.777139E+04	2.542654E+04
202731	1054	4.823290E+04	4.891463E+04	4.895723E+03	2.519317E+04
201714	1054	4.715768E+04	4.459567E+04	3.391250E+04	2.663997E+04
202164	1054	4.689782E+04	5.099081E+04	6.321710E+03	2.529340E+04
201921	1054	4.643728E+04	1.558576E+04	5.146291E+04	2.573380E+04
201765	1054	4.643237E+04	2.412248E+04	4.508036E+04	2.467547E+04
200286	1054	4.636165E+04	2.466841E+04	3.706391E+04	2.675074E+04
202210	1054	4.614330E+04	1.011410E+04	5.678080E+04	2.333335E+04
201599	1054	4.611803E+04	9.573774E+03	5.264481E+04	2.354836E+04
202017	1054	4.568890E+04	3.167601E+04	3.953202E+04	2.629908E+04
202803	1054	4.568879E+04	3.187296E+04	4.067444E+04	2.602570E+04
201346	1054	4.554145E+04	1.320376E+04	4.265805E+04	2.576368E+04
201417	1054	4.538428E+04	1.574101E+04	5.462416E+04	2.531600E+04
202984	1054	4.528861E+04	8.398640E+03	4.186266E+04	2.390023E+04

+++ CTETRA: MAX. VON-MISES STRESS +++

ID	SUBCASE	MAX-VONM	MAX-MAX-PRIN	MAX-MIN-PRIN	MAX-MAX-SHR
201377	1054	4.528356E+04	2.733555E+04	2.889437E+04	2.589737E+04
201534	1054	4.496518E+04	5.971018E+04	4.046980E+04	2.564306E+04
201222	1054	4.494412E+04	7.735817E+03	4.265125E+04	2.512394E+04
202160	1054	4.474114E+04	4.482439E+04	2.633758E+04	2.549008E+04
200279	1054	4.455574E+04	1.077101E+04	4.855427E+04	2.345342E+04
201376	1054	4.436935E+04	1.097405E+04	4.245147E+04	2.252820E+04
200857	1054	4.430735E+04	1.862027E+04	3.864284E+04	2.460452E+04
201318	1054	4.429075E+04	9.801450E+03	4.394491E+04	2.479883E+04
201217	**1054**	**4.410501E+04**	**2.869078E+03**	**4.898480E+04**	**2.321290E+04**

```
### SELECT TETRA-STRESSES
###  SORT VAR = MAX(MAX-MAX-PRIN,MAX-MIN-PRIN);OPT=12
###  PRINT 36 48 54 42;
###  HEADING = 'CTETRA: MAX. PRINCIPAL STRESS';
###  NCASES = 150
```


+++ CTETRA: MAX. PRINCIPAL STRESS +++

ID	SUBCASE	MAX-VONM	MAX-MAX-PRIN	MAX-MIN-PRIN	MAX-MAX-SHR
202217	1054	1.515798E+05	1.174703E+05	6.547394E+04	8.720787E+04
202883	1054	1.170990E+05	4.295967E+04	9.771110E+04	6.695930E+04
200636	1054	8.650958E+04	4.959289E+04	9.075273E+04	4.993664E+04
201485	1054	8.227761E+04	4.431431E+04	8.947968E+04	4.749695E+04
202332	1054	7.510269E+04	8.676226E+04	6.706595E+04	4.202872E+04
200860	1054	6.354695E+04	5.944557E+04	7.784032E+04	3.313810E+04
201979	1054	5.137324E+04	6.925859E+04	3.673467E+04	2.831508E+04
200456	1054	5.417550E+04	1.159456E+04	6.872663E+04	2.856603E+04
200897	1054	5.898184E+04	1.166302E+04	6.809338E+04	3.183047E+04
202425	1054	6.097699E+04	1.076386E+04	6.660849E+04	3.211523E+04
202743	1054	5.878958E+04	9.316934E+03	6.512291E+04	3.077734E+04
200702	1054	5.457907E+04	2.646537E+04	6.360204E+04	2.823155E+04
200278	1054	4.930827E+04	1.820695E+04	6.310694E+04	2.543604E+04
200734	1054	7.641551E+04	4.086730E+04	6.148069E+04	4.408019E+04
201860	1054	5.825238E+04	2.144727E+04	6.137911E+04	3.048648E+04
200751	1054	5.141144E+04	2.035358E+04	6.128119E+04	2.811330E+04
200752	1054	5.177062E+04	1.231153E+04	6.110482E+04	2.775859E+04
202796	1054	5.114905E+04	7.849641E+03	6.045282E+04	2.630159E+04
202517	1054	5.347619E+04	7.334784E+03	5.989495E+04	2.772289E+04
200269	1054	5.088761E+04	4.890043E+04	5.984928E+04	2.663373E+04
201534	1054	4.496518E+04	5.971018E+04	4.046980E+04	2.564306E+04
201767	1054	5.378140E+04	2.699824E+04	5.954132E+04	3.006917E+04
200267	1054	1.005514E+05	5.721918E+04	5.886902E+04	5.804410E+04

+++ CTETRA: MAX. PRINCIPAL STRESS +++

ID	SUBCASE	MAX-VONM	MAX-MAX-PRIN	MAX-MIN-PRIN	MAX-MAX-SHR
201317	1054	5.362081E+04	2.332659E+04	5.849763E+04	2.953629E+04
202809	1054	5.181127E+04	9.005770E+03	5.810413E+04	2.673210E+04
201768	1054	4.068834E+04	2.586475E+04	5.796214E+04	2.202281E+04
201704	1054	3.255766E+04	2.331134E+04	5.740398E+04	1.704632E+04
202210	1054	4.614330E+04	1.011410E+04	5.678080E+04	2.333335E+04
201416	1054	5.479191E+04	1.907836E+04	5.654938E+04	2.808040E+04
201417	1054	4.538428E+04	1.574101E+04	5.462416E+04	2.531600E+04
200647	1054	4.034161E+04	1.071395E+04	5.439658E+04	2.184131E+04
200527	1054	5.054515E+04	1.111308E+04	5.392534E+04	2.697183E+04
202104	1054	5.120950E+04	2.138755E+04	5.391369E+04	2.684740E+04
200311	1054	5.360834E+04	1.186598E+04	5.361561E+04	2.867760E+04
202055	1054	6.499153E+04	2.411203E+04	5.331124E+04	3.741296E+04
201599	1054	4.611803E+04	9.573774E+03	5.264481E+04	2.354836E+04
200440	1054	5.121828E+04	4.200234E+03	5.255298E+04	2.700537E+04
200936	1054	4.400735E+04	6.151901E+03	5.214704E+04	2.299757E+04
201921	1054	4.643728E+04	1.558576E+04	5.146291E+04	2.573380E+04
200458	1054	3.767607E+04	1.292241E+04	5.116655E+04	1.973465E+04
202164	1054	4.689782E+04	5.099081E+04	6.321710E+03	2.529340E+04
200937	1054	4.352046E+04	1.160824E+04	5.089000E+04	2.266335E+04
201555	1054	5.047480E+04	1.166234E+04	5.087049E+04	2.781246E+04
200329	1054	4.111749E+04	1.946077E+04	5.074707E+04	2.253956E+04
200149	1054	3.963480E+04	5.022657E+04	2.072690E+04	2.152592E+04
202621	1054	5.271295E+04	4.997951E+04	9.953226E+03	2.996637E+04

+++ CTETRA: MAX. PRINCIPAL STRESS +++

ID	SUBCASE	MAX-VONM	MAX-MAX-PRIN	MAX-MIN-PRIN	MAX-MAX-SHR
201312	1054	6.293714E+04	4.287193E+04	4.971270E+04	3.631421E+04
202412	1054	5.163786E+04	8.443156E+03	4.967690E+04	2.714124E+04
202162	1054	5.334706E+04	4.948752E+04	1.910122E+04	2.956832E+04
200865	1054	5.625383E+04	2.099273E+04	4.940111E+04	2.970946E+04
201217	1054	4.410501E+04	2.869078E+03	4.898480E+04	2.321290E+04
202731	1054	4.823290E+04	4.891463E+04	4.895723E+03	2.519317E+04
201742	1054	4.003761E+04	1.406694E+04	4.874455E+04	2.109594E+04
200279	1054	4.455574E+04	1.077101E+04	4.855427E+04	2.345342E+04
202691	1054	5.433587E+04	4.822972E+04	1.747143E+04	2.985046E+04
202253	1054	5.540527E+04	4.820444E+04	2.087362E+04	3.056340E+04
200536	1054	3.906984E+04	4.809619E+04	4.464158E+04	2.199690E+04
200555	1054	4.372316E+04	3.808323E+03	4.804514E+04	2.313778E+04
201569	1054	4.837640E+04	2.703588E+04	4.777139E+04	2.542654E+04
202811	1054	3.721197E+04	2.077466E+04	4.771009E+04	1.938789E+04
201147	1054	4.310987E+04	5.226999E+03	4.744184E+04	2.296197E+04
201741	1054	4.919385E+04	6.706398E+03	4.696763E+04	2.683701E+04
202554	1054	4.908027E+04	1.515803E+04	4.687419E+04	2.560334E+04
202576	1054	4.937514E+04	1.856990E+04	4.679577E+04	2.589936E+04
202976	1054	4.287538E+04	9.135586E+03	4.654931E+04	2.215157E+04
202569	1054	4.869696E+04	9.191743E+03	4.654047E+04	2.467852E+04
202354	1054	5.184368E+04	4.653542E+04	1.122037E+04	2.775365E+04
202816	1054	3.989199E+04	2.372286E+04	4.648960E+04	2.079649E+04
203015	1054	4.161550E+04	1.668962E+04	4.642579E+04	2.115935E+04

+++ CTETRA: MAX. PRINCIPAL STRESS +++

ID	SUBCASE	MAX-VONM	MAX-MAX-PRIN	MAX-MIN-PRIN	MAX-MAX-SHR
201670	1054	5.703159E+04	1.696582E+04	4.626642E+04	3.161612E+04
201447	1054	3.908666E+04	1.208250E+04	4.561489E+04	2.053620E+04
201589	1054	3.402916E+04	2.759110E+04	4.540061E+04	1.808856E+04
201765	1054	4.643237E+04	2.412248E+04	4.508036E+04	2.467647E+04
202985	1054	4.060532E+04	5.774349E+03	4.486556E+04	2.099493E+04
202160	1054	4.474114E+04	4.482439E+04	2.633758E+04	2.549008E+04
201714	1054	4.715768E+04	4.459567E+04	3.391250E+04	2.663997E+04
202860	1054	3.562134E+04	3.788749E+04	4.453797E+04	1.860084E+04
201182	1054	3.550409E+04	2.303837E+04	4.431527E+04	2.021235E+04
202888	1054	5.029860E+04	1.143688E+04	4.429488E+04	2.786588E+04
201405	1054	3.950808E+04	1.858666E+04	4.406511E+04	1.994066E+04
201318	1054	4.429075E+04	9.801450E+03	4.394491E+04	2.479883E+04
201866	1054	7.425544E+04	4.187514E+04	4.389479E+04	4.245940E+04
201790	1054	4.096401E+04	1.012806E+04	4.386863E+04	2.101505E+04
200532	1054	3.667347E+04	1.551506E+04	4.381799E+04	1.891679E+04
200153	1054	3.440935E+04	1.550234E+04	4.380237E+04	1.757701E+04
200477	1054	3.676123E+04	2.097743E+04	4.348307E+04	2.062552E+04
200216	1054	4.147705E+04	3.320884E+03	4.342613E+04	2.104276E+04
201224	1054	3.466147E+04	7.341429E+03	4.325929E+04	1.924826E+04
200913	1054	4.117486E+04	1.870697E+04	4.298697E+04	2.111598E+04
201198	1054	3.661295E+04	1.559949E+04	4.297670E+04	2.039938E+04
201691	1054	3.865451E+04	4.291119E+04	1.958027E+04	2.149494E+04
200327	1054	3.539749E+04	1.190585E+04	4.275921E+04	2.006588E+04

+++ CTETRA: MAX. PRINCIPAL STRESS +++

ID	SUBCASE	MAX-VONM	MAX-MAX-PRIN	MAX-MIN-PRIN	MAX-MAX-SHR
201346	1054	4.554145E+04	1.320376E+04	4.265805E+04	2.576368E+04
201222	1054	4.494412E+04	7.735817E+03	4.265125E+04	2.512394E+04
200156	**1054**	**3.176279E+04**	**2.187177E+04**	**4.255766E+04**	**1.645757E+04**

```
### SELECT TETRA-STRESSES
###  SORT VAR = MAX|MAX-MAX-SHR);OPT=12
###  PRINT 36 48 54 42;
###  HEADING = 'CTETRA: MAX. SHEAR STRESS';
###  NCASES = 150
```


+++ CTETRA: MAX. SHEAR STRESS +++

ID	SUBCASE	MAX-VONM	MAX-MAX-PRIN	MAX-MIN-PRIN	MAX-MAX-SHR
202217	1054	1.515798E+05	1.174703E+05	6.547394E+04	8.720787E+04
202883	1054	1.170990E+05	4.295967E+04	9.771110E+04	6.695930E+04
200267	1054	1.005514E+05	5.721918E+04	5.886902E+04	5.804410E+04
200636	1054	8.650958E+04	4.959289E+04	9.075273E+04	4.993664E+04
201485	1054	8.227761E+04	4.431431E+04	8.947968E+04	4.749695E+04
200734	1054	7.641551E+04	4.086730E+04	6.148069E+04	4.408019E+04
201866	1054	7.425544E+04	4.187514E+04	4.389479E+04	4.245940E+04
202332	1054	7.510269E+04	8.676226E+04	6.706595E+04	4.202872E+04
202055	1054	6.499153E+04	2.411203E+04	5.331124E+04	3.741296E+04
201375	1054	6.357211E+04	4.222753E+04	3.298061E+04	3.669646E+04
201312	1054	6.293714E+04	4.287193E+04	4.971270E+04	3.631421E+04
200860	1054	6.354695E+04	5.944557E+04	7.784032E+04	3.313810E+04
201837	1054	5.604580E+04	2.862428E+04	3.574546E+04	3.218487E+04
202425	1054	6.097699E+04	1.076386E+04	6.660849E+04	3.211523E+04
201864	1054	5.543190E+04	2.708578E+04	3.689606E+04	3.199092E+04
200897	1054	5.898184E+04	1.166302E+04	6.809338E+04	3.183047E+04
201670	1054	5.703159E+04	1.696582E+04	4.626642E+04	3.161612E+04
201987	1054	5.474004E+04	2.356317E+04	4.141754E+04	3.155046E+04
200866	1054	5.356495E+04	2.564388E+04	3.879049E+04	3.092551E+04
202743	1054	5.878958E+04	9.316934E+03	6.512291E+04	3.077734E+04
202253	1054	5.540527E+04	4.820444E+04	2.087362E+04	3.056340E+04
201860	1054	5.825238E+04	2.144727E+04	6.137911E+04	3.048648E+04
201767	1054	5.378140E+04	2.699824E+04	5.954132E+04	3.006917E+04

+++ CTETRA: MAX. SHEAR STRESS +++

ID	SUBCASE	MAX-VONM	MAX-MAX-PRIN	MAX-MIN-PRIN	MAX-MAX-SHR
202621	1054	5.271295E+04	4.997951E+04	9.953226E+03	2.996637E+04
202691	1054	5.433587E+04	4.822972E+04	1.747143E+04	2.985046E+04
200865	1054	5.625383E+04	2.099273E+04	4.940111E+04	2.970946E+04
200847	1054	5.316318E+04	1.967831E+04	3.973686E+04	2.970758E+04
202162	1054	5.334706E+04	4.948752E+04	1.910122E+04	2.956832E+04
201317	1054	5.362081E+04	2.332659E+04	5.849763E+04	2.953629E+04
201352	1054	5.122947E+04	3.483759E+04	2.553501E+04	2.948237E+04
200311	1054	5.360834E+04	1.186598E+04	5.361561E+04	2.867760E+04
200456	1054	5.417550E+04	1.159456E+04	6.872663E+04	2.856603E+04
201979	1054	5.137324E+04	6.925859E+04	3.673467E+04	2.831508E+04
200702	1054	5.457907E+04	2.646537E+04	6.360204E+04	2.823155E+04
200751	1054	5.141144E+04	2.035358E+04	6.128119E+04	2.811330E+04
201416	1054	5.479191E+04	1.907836E+04	5.654938E+04	2.808040E+04
202888	1054	5.029860E+04	1.143688E+04	4.429488E+04	2.786588E+04
201555	1054	5.047480E+04	1.166234E+04	5.087049E+04	2.781246E+04
200752	1054	5.177062E+04	1.231153E+04	6.110482E+04	2.775859E+04
202354	1054	5.184368E+04	4.653542E+04	1.122037E+04	2.775365E+04
202517	1054	5.347619E+04	7.334784E+03	5.989495E+04	2.772289E+04
202159	1054	4.904669E+04	2.816673E+04	3.596973E+04	2.750612E+04
202412	1054	5.163786E+04	8.443156E+03	4.967690E+04	2.714124E+04
200440	1054	5.121828E+04	4.200234E+03	5.255298E+04	2.700537E+04
200527	1054	5.054515E+04	1.111308E+04	5.392534E+04	2.697183E+04
202104	1054	5.120950E+04	2.138755E+04	5.391369E+04	2.684740E+04

+++ CTETRA: MAX. SHEAR STRESS +++

ID	SUBCASE	MAX-VONM	MAX-MAX-PRIN	MAX-MIN-PRIN	MAX-MAX-SHR
201741	1054	4.919385E+04	6.706398E+03	4.696763E+04	2.683701E+04
200286	1054	4.636165E+04	2.466841E+04	3.706391E+04	2.675074E+04
202809	1054	5.181127E+04	9.005770E+03	5.810413E+04	2.673210E+04
201714	1054	4.715768E+04	4.459567E+04	3.391250E+04	2.663997E+04
202563	1054	4.857166E+04	1.517800E+04	3.969111E+04	2.663412E+04
200269	1054	5.088761E+04	4.890043E+04	5.984928E+04	2.663373E+04
202796	1054	5.114905E+04	7.849641E+03	6.045282E+04	2.630159E+04
202017	1054	4.568890E+04	3.167601E+04	3.953202E+04	2.629908E+04
202803	1054	4.568879E+04	3.187296E+04	4.067444E+04	2.602570E+04
202576	1054	4.937514E+04	1.856990E+04	4.679577E+04	2.589936E+04
201377	1054	4.528356E+04	2.733555E+04	2.889437E+04	2.589737E+04
201346	1054	4.554145E+04	1.320376E+04	4.265805E+04	2.576368E+04
201921	**1054**	**4.643728E+04**	**1.558576E+04**	**5.146291E+04**	**2.573380E+04**

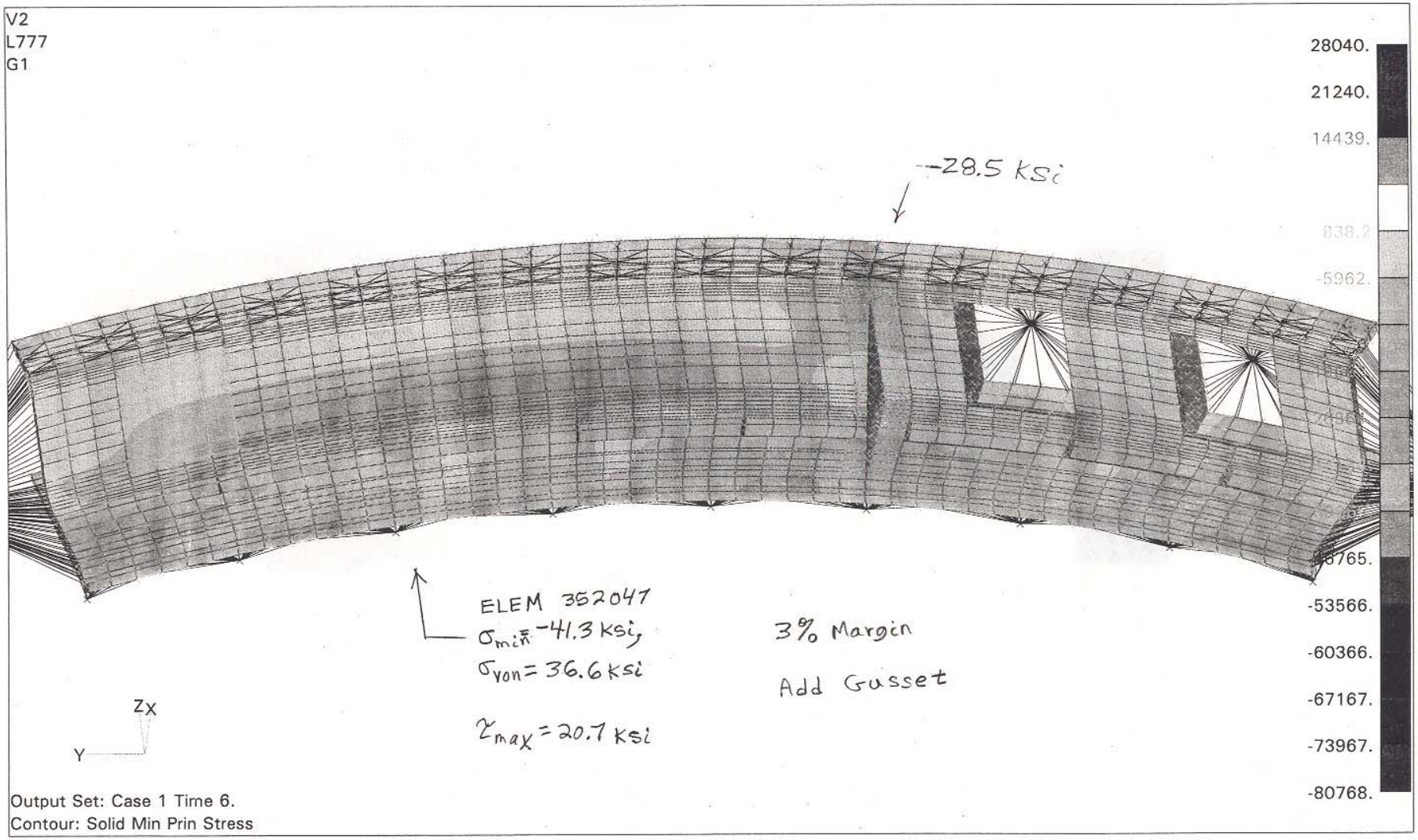
V2
L777
G1
28040.
21240.
14439.
838.2
-5962.
-28.5 ksi
-53566.
-60366.
-67167.
-73967.
-80768.
ELEM 352047
σ_{min} = -41.3 ksi,
σ_{von} = 36.6 ksi
τ_{max} = 20.7 ksi
3% Margin
Add Gusset
ZX
Y
Output Set: Case 1 Time 6.
Contour: Solid Min Prin Stress

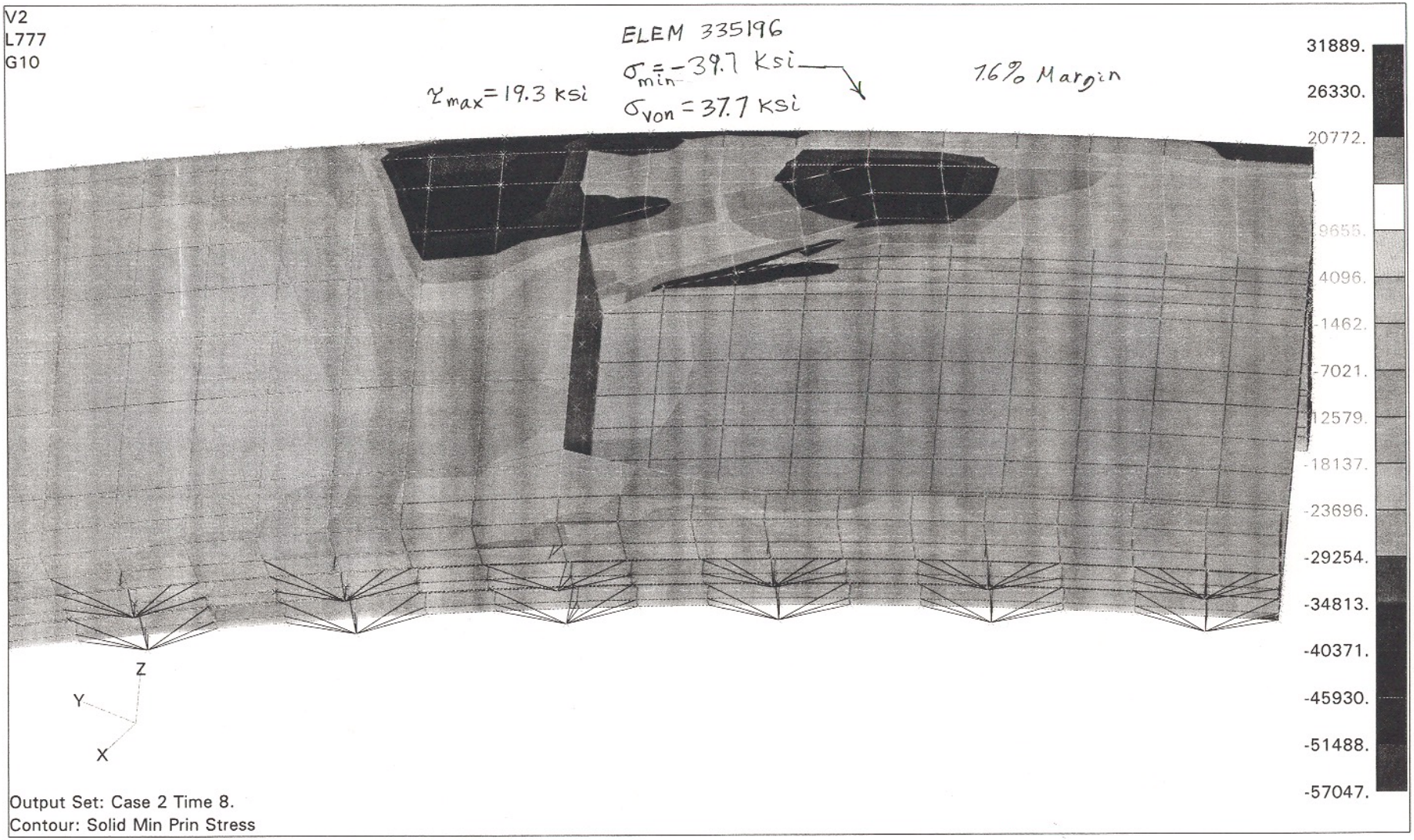
V2
L777
G10
ELEM 335196
σ_{min} = -39.7 ksi
σ_{von} = 37.7 ksi
τ_{max} = 19.3 ksi
7.6% Margin
31889.
26330.
20772.
9655.
4096.
-1462.
-7021.
-12579.
-18137.
-23696.
-29254.
-34813.
-40371.
-45930.
-51488.
-57047.
Z
Y
X
Output Set: Case 2 Time 8.
Contour: Solid Min Prin Stress

5i. For Lower Port: (Cont'd)

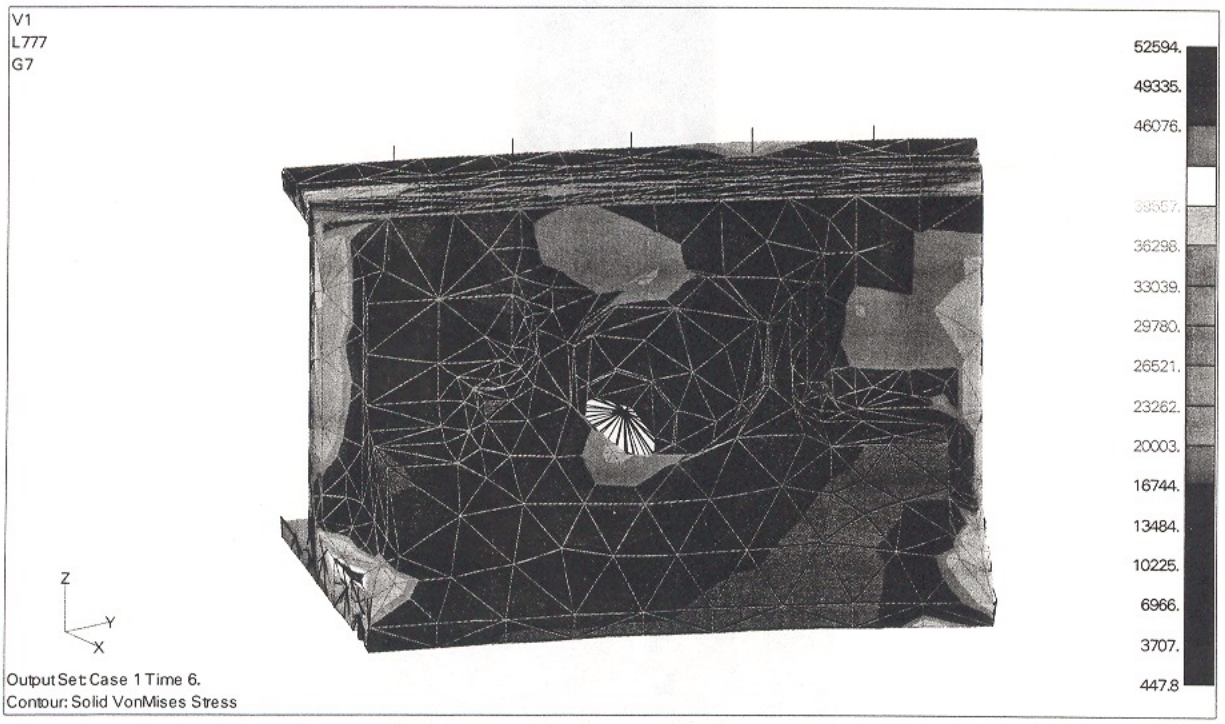

Figure 4. Lower Port : Maximum Von-Mises Stress

5ii. For Upper Port: (Cont'd)

Figure 6. Upper Port : Maximum Von-Mises Stress

5ii. For Upper Port: (Cont'd)

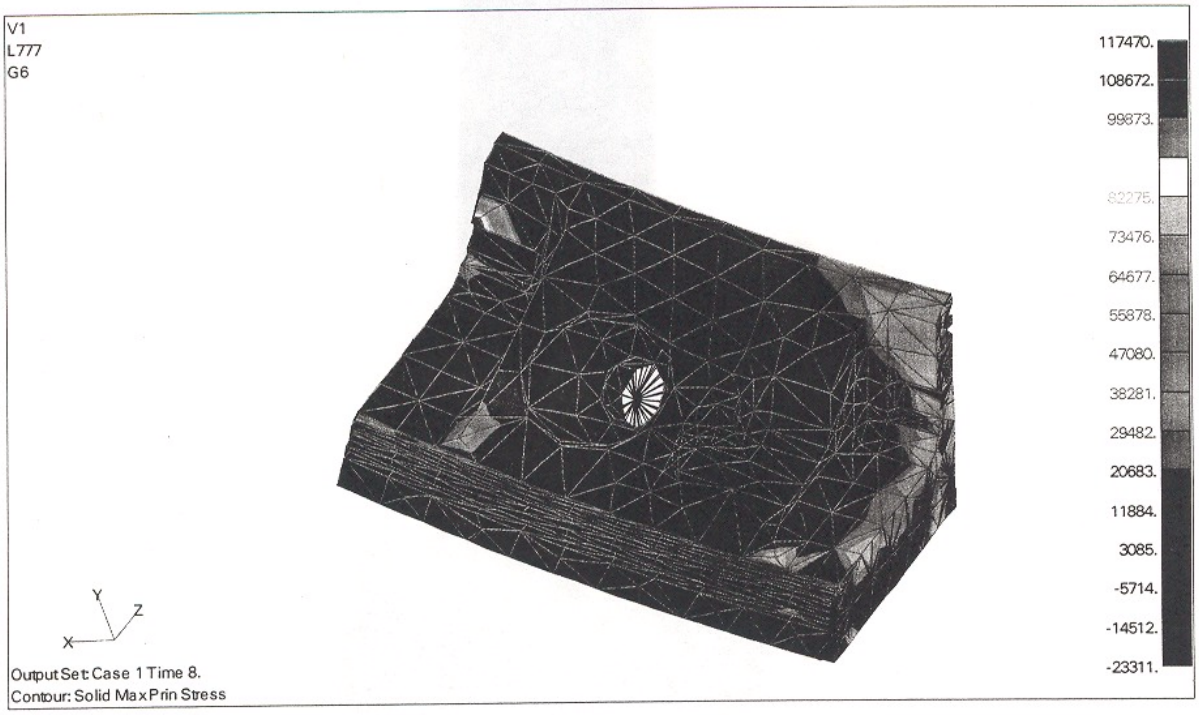

Figure 7. Upper Port : Maximum Max-Principal Stress

5i. For Lower Port: (Cont'd)

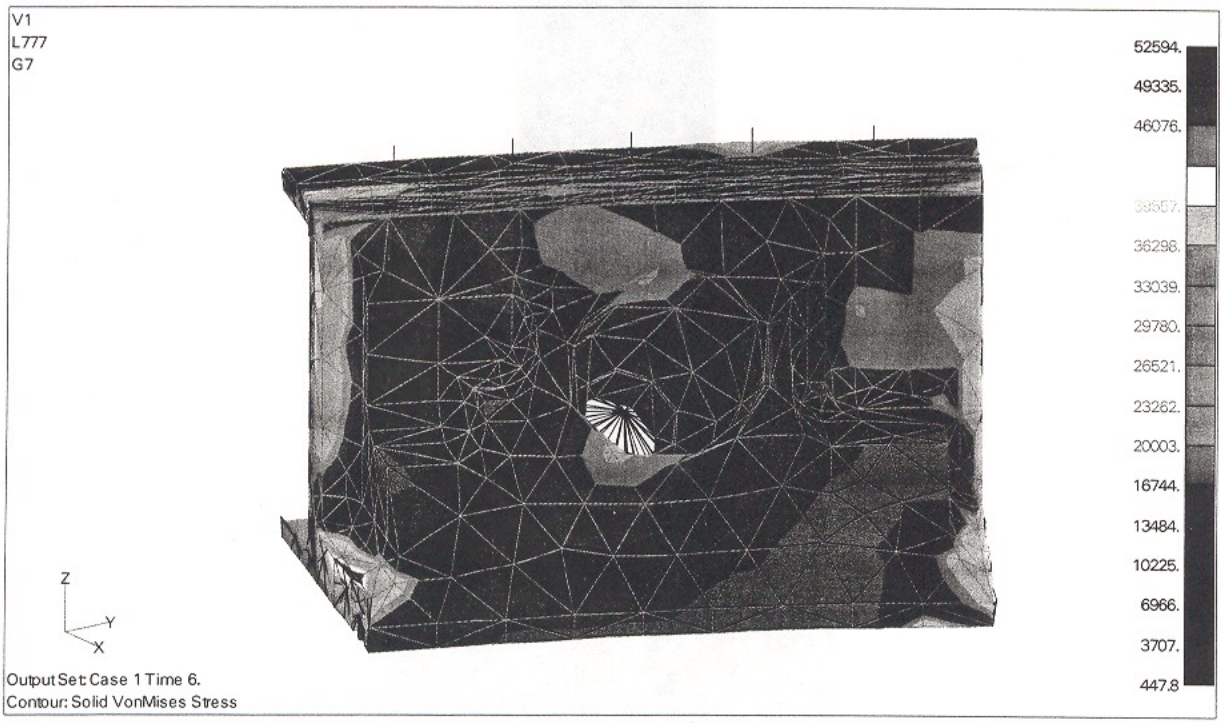

Figure 4. Lower Port : Maximum Von-Mises Stress

Section 1.1.5 INTERFACE PLATES AND CLEVIS PLATES

AMS-02 Interface Plate Margin of Safety Summary

USS-02 to Interface plate (Regular Analysis)

Top	MS	ID no.	subcase no.	Sorted by
Bolts	0.96	66004	1009	All cases
Shear pin	0.335	66001	1016	
Inserts	0.734	66002	1038	
Bearing				
Ultimate	0.424	66001	1016	
Yield	0.131	66001	1016	

Bottom	MS	ID no.	subcase no.	Sorted by
Bolts	0.59	66014	2058	All cases
Shear pin	0.185	66013	2020	
Inserts	0.788	66011	2031	
Bearing				
Ultimate	0.26	66013	2020	
Yield	0.004	66013	2020	

USS-02 to Interface plate (Fail-safe Analysis)

Top	MS	ID no.	subcase no.	Sorted by
Bolts	1.025	66004	1009	All cases
Shear pin	0.868	66001	1016	
Inserts	1.435	66001	1049	
Bearing				
Ultimate	0.993	66001	1016	
Yield	0.244	66001	1016	

Bottom	MS	ID no.	subcase no.	Sorted by
Bolts	0.687	66014	2058	All cases
Shear pin	0.66	66013	2020	
Inserts	1.55	66011	2031	
Bearing				
Ultimate	0.771	66013	2020	
Yield	0.02	66013	2020	

Vacuum Case to interface Plate (Regular Analysis)

Top	MS	ID no.	subcase no.	Sorted by
Bolts	0.62	64004	1001	All cases
Shear pin	0.337	64001	1016	
Inserts	0.837	64002	1038	
Bearing				
Ultimate	0.426	64001	1016	
Yield	0.246	64001	1016	

Bottom	MS	ID no.	subcase no.	Sorted by
Bolts	0.675	64013	2020	All cases
shear pin	0.294	64013	2020	
Inserts	0.716	64011	2049	
Bearing				
Ultimate	0.38	64013	2020	
Yield	0.113	64013	2020	

Vacuum Case to interface Plate (Fail-safe Analysis)

Top	MS	ID no.	subcase no.	Sorted by
Bolts	0.73	64004	1005	All cases
Shear pin	0.871	64001	1016	
Inserts	1.452	64001	1049	
Bearing				
Ultimate	0.996	64001	1016	
Yield	0.246	64001	1016	

Bottom	MS	ID no.	subcase no.	Sorted by
Bolts	0.826	64013	2020	All cases
shear pin	0.817	64013	2020	
Inserts	1.425	64011	2049	
Bearing				
Ultimate	0.938	64013	2020	
Yield	0.116	64013	2020	

Prepared By	Name/Date C.Bala 11/18/02	LOCKHEED MARTIN Science, Engineering, Analysis, & Test *Mechanical Systems Analysis Department*	Page No. 1 1-1-5-1-1	File Name upr_ussip.mcd
Checked By	VCA 1/10/03		Drawing No SEG39135788	
Title	**Upper Interface plate to USS Bolts 6-02a loads**			

Upper Interface Plate Bolt Analysis (USS)

The width of the upper interface plate is 10.5 in. There are a total of 8 fasteners attaching the USS to the interface plate. NAS1958C (180 ksi), 0.50-20 UNF, and one shear pin 0.875 in. diameter

size thread/in

$$bolt := \begin{bmatrix} 0.50 & 20 \\ 0.50 & 20 \\ 0.50 & 20 \\ 0.50 & 20 \\ 0.50 & 20 \\ 0.50 & 20 \\ 0.50 & 20 \\ 0.50 & 20 \end{bmatrix}$$

Fitting factor $FF := 1.15$

Ultimate factor of safety $FSu := 1.4$

Yield factor of safety $FSy := 1.10$

$i := 1..rows(bolt)$

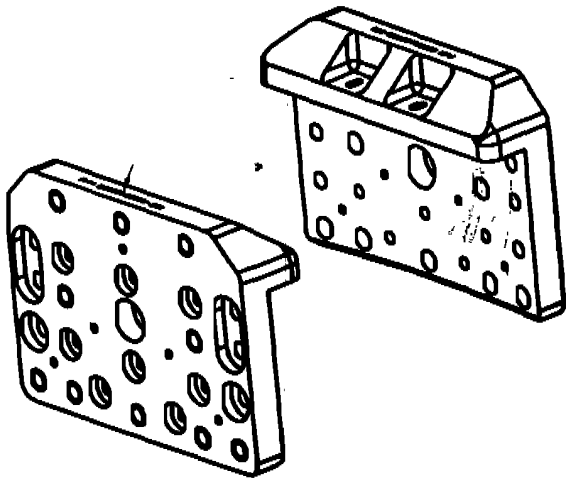

$D_i := bolt_{i,1} \cdot in$ $N_i := bolt_{i,2} \cdot \frac{1}{in}$

$$Ftu := \begin{bmatrix} 180000 \\ 180000 \\ 180000 \\ 180000 \\ 180000 \\ 180000 \\ 180000 \\ 180000 \end{bmatrix} \cdot psi \qquad Fty := \begin{bmatrix} 95000 \\ 95000 \\ 95000 \\ 95000 \\ 95000 \\ 95000 \\ 95000 \\ 95000 \end{bmatrix} psi$$

$Fsu_i := Ftu_i \cdot .6$

$$Fsu = \begin{bmatrix} 1.08 \cdot 10^5 \\ 1.08 \cdot 10^5 \\ 1.08 \cdot 10^5 \\ 1.08 \cdot 10^5 \\ 1.08 \cdot 10^5 \\ 1.08 \cdot 10^5 \\ 1.08 \cdot 10^5 \\ 1.08 \cdot 10^5 \end{bmatrix} \cdot psi$$

Prepared By	Name/Date C.Bala 11/18/02	LOCKHEED MARTIN	Page No. 2	File Name upr_ussip.mcd
Checked By		Science, Engineering, Analysis, & Test *Mechanical Systems Analysis Department*	Drawing No	SEG39135788
Title	**Upper Interface plate to USS Bolts 6-02a loads**			

$$At_i := \pi \cdot \left(\frac{D_i - 0.9743 \cdot \frac{1}{N_i}}{2} \right)^2 \qquad As_i := \pi \cdot \left(\frac{D_i - 1.299038 \cdot \frac{1}{N_i}}{2} \right)^2$$

Temperature correction factor for 140 deg. F

$ctu := 0.98$ $cty := 0.98$ $csu := 0.98$ (Ref. MIL-HDBK-5H, fig. 6.2.1.1.1)

$ftu_i := Ftu_i \cdot At_i \cdot ctu$ $fty_i := Fty_i \cdot At_i \cdot cty$ $fsu_i := Fsu_i \cdot As_i \cdot csu$

$Fpmax_i := .75 \cdot fty_i$ $Fpmin_i := .85 \cdot Fpmax_i$

Bolt No.	x co-ord	y co-ord	z co-ord
1	0.0	-3.0	-3.312
2	0.0	0.0	-3.312
3	0.0	3.0	-3.312
4	0.0	-3.0	-0.062
5	0.0	3.0	-0.062
6	0.0	-3.0	3.188
7	0.0	0.0	3.188
8	0.0	3.0	3.188

$x := \begin{bmatrix} 0.0 \\ 0.0 \\ 0.0 \\ 0.0 \\ 0.0 \\ 0.0 \\ 0.0 \\ 0.0 \end{bmatrix} \cdot in$ $y := \begin{bmatrix} -3.0 \\ 0.0 \\ 3.0 \\ -3.0 \\ 3.0 \\ -3.0 \\ 0.0 \\ 3.0 \end{bmatrix} \cdot in$ $z := \begin{bmatrix} -3.312 \\ -3.312 \\ -3.312 \\ -0.062 \\ -0.062 \\ 3.188 \\ 3.188 \\ 3.188 \end{bmatrix} \cdot in$

Center of gravity of bolt group

$$xcg := \frac{\sum_i x_i}{rows(x)} \quad xcg = 0 \cdot in \qquad ycg := \frac{\sum_i y_i}{rows(y)} \quad ycg = 0 \cdot in \qquad zcg := \frac{\sum_i z_i}{rows(z)} \quad zcg = -0.06 \cdot in$$

Max Torque $= Fpmax \times D = 0.2 \times 11392 \times 0.5 = 1139$ in lbs

Min Torque $= 0.85 \times 1139 = 968$ in lbs

Prepared By	Name/Date C.Bala 11/18/02	LOCKHEED MARTIN	Page No. 3	File Name
			1.1.5.1-3	upr_ussip.mcd
Checked By	[signature] 11/19/02	Science, Engineering, Analysis, & Test *Mechanical Systems Analysis Department*	Drawing No	SEG39135788
Title	Upper Interface plate to USS Bolts 6-02a loads			

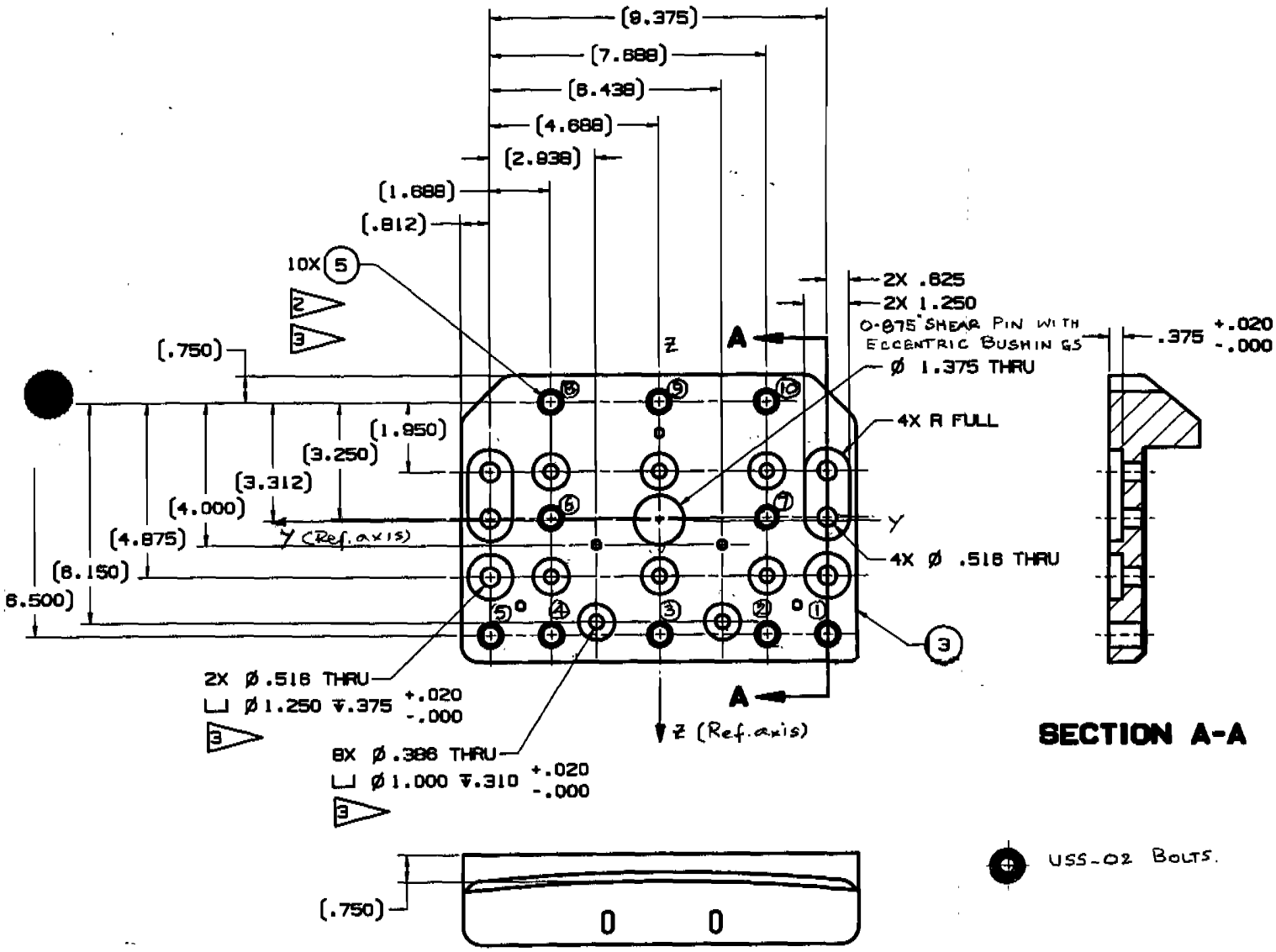

Prepared By	Name/Date C.Bala 11/18/02	LOCKHEED MARTIN	Page No. 4	File Name
			1.1.5.1-4	upr_ussip.mcd
Checked By	11/19/03	Science, Engineering, Analysis, & Test	Drawing No	
		Mechanical Systems Analysis Department		SEG39135788
Title	**Upper Interface plate to USS Bolts 6-02a loads**			

$$r_i := \sqrt{(y_i - ycg)^2 + (z_i - zcg)^2} \qquad r = \begin{bmatrix} 4.423 \\ 3.250 \\ 4.423 \\ 3.000 \\ 3.000 \\ 4.423 \\ 3.250 \\ 4.423 \end{bmatrix} \cdot in$$

data := READPRN("upperussipf.dat")

$j := 1 .. rows(data)$

$Fx_j := data_{j,3} \cdot lbf$ $\quad Mx_j := data_{j,6} \cdot in \cdot lbf$

$Fy_j := data_{j,4} \cdot lbf$ $\quad My_j := data_{j,7} \cdot in \cdot lbf$

$Fz_j := data_{j,5} \cdot lbf$ $\quad Mz_j := data_{j,8} \cdot in \cdot lbf$

num_bolts := rows(bolt)

The loads data is based on model 6-02a. the CBUSH element loads are read from the model and stored in the file upperussipf.dat. There are a total of 256 load cases at each of the four upper interface plates. (64 lift off cases, 64 landing cold cases, 64 slosh cases and 64 landing warm cases). So the analysis considers 256x4 = 1024 data points

Prepared By	Name/Date C.Bala 11/18/02	LOCKHEED MARTIN	Page No. 5 1.1.5.1-5	File Name upr_ussip.mcd
Checked By	11/19/02	Science, Engineering, Analysis, & Test *Mechanical Systems Analysis Department*	Drawing No SEG39135788	
Title	**Upper Interface plate to USS Bolts 6-02a loads**			

Location of applied forces and moments from the finite element model.

xforce := 0.0 in yforce := 0.0 in zforce := 0.0 in

$$cgload := \begin{bmatrix} xforce \\ yforce \\ zforce \end{bmatrix} \qquad cgload = \begin{bmatrix} 0 \\ 0 \\ 0 \end{bmatrix} \cdot in$$

$$cg_{bolt} := \begin{bmatrix} xcg \\ ycg \\ zcg \end{bmatrix} \qquad cg_{bolt} = \begin{bmatrix} 0 \\ 0 \\ -0.06 \end{bmatrix} \cdot in$$

Load Vector

$$r_{load} := cg_{bolt} - cgload \qquad r_{load} = \begin{bmatrix} 0 \\ 0 \\ -0.06 \end{bmatrix} \cdot in$$

$$M_{tot}^{\langle j \rangle} := \begin{bmatrix} Mx_j \\ My_j \\ Mz_j \end{bmatrix} + r_{load} \times \begin{bmatrix} Fx_j \\ Fy_j \\ Fz_j \end{bmatrix}$$

num_bolts := rows(bolt) $Fx\_boltcg_j := Fx_j$ $Fy\_boltcg_j := Fy_j$ $Fz\_boltcg_j := Fz_j$

$Mx\_boltcg_j := M_{tot_{1,j}}$ $My\_boltcg_j := M_{tot_{2,j}}$ $Mz\_boltcg_j := M_{tot_{3,j}}$

Tension on bolts

$$Ftdirect_{i,j} := \begin{cases} 0 \cdot lbf & \text{if } Fx\_boltcg_j \le 0\ lbf \\ \dfrac{Fx\_boltcg_j}{num\_bolts} \end{cases}$$

Prepared By	Name/Date C.Bala 11/18/02	LOCKHEED MARTIN	Page No. 6 1-1-5-1-6	File Name upr_ussip.mcd
Checked By	11/18/02	Science, Engineering, Analysis, & Test *Mechanical Systems Analysis Department*	Drawing No SEG39135788	
Title	**Upper Interface plate to USS Bolts 6-02a loads**			

$$Fmy_{i,j} := \begin{cases} 0\cdot lbf & \text{if } (z_i - zcg) = 0\cdot in \\ \dfrac{\left[My\_boltcg_j \cdot (z_i - zcg)\right] At_i}{\sum_i \left[(z_i - zcg)^2 \cdot At_i\right]} & \text{otherwise} \end{cases}$$

$$Fmz_{i,j} := \begin{cases} 0\cdot lbf & \text{if } (y_i - ycg) = 0\cdot in \\ \dfrac{Mz\_boltcg_j \cdot (y_i - ycg) \cdot At_i}{\sum_i \left[(|y_i - ycg|)^2 \cdot At_i\right]} & \text{otherwise} \end{cases}$$

$$Ft_{i,j} := Ftdirect_{i,j} + Fmy_{i,j} + Fmz_{i,j}$$

Secondary shear on bolts $$Fs_{i,j} := \frac{Mx\_boltcg_j \cdot r_i \cdot As_i}{\sum_i \left[(r_i)^2 \cdot (As_i)\right]}$$, the direct shear is taken by the shear pin

Tensile and shear ratios

Loading plane factor: $n := .5$

Joint load factor (steel bolt on Alum. plate): $\phi := 0.266$

Calculate joint seperation load: $$Wjs_{i,j} := \frac{Fpmin_i}{(1 - n\cdot\phi)}$$ $\min(Wjs) = 10949.7 \cdot lbf$

Check for joint separation (if ratio is > 1.0, separation occurs)

$$check\_ratio_{i,j} := \frac{Ft_{i,j}}{Wjs_{i,j}}$$ $\max(check\_ratio) = 0.73$

Axial load

$$Fax_{i,j} := \begin{cases} Fpmax_i + \phi\cdot n\cdot (FSu\cdot FF\cdot Ft_{i,j}) & \text{if } Ft_{i,j} < Wjs_{i,j} \\ FF\cdot FSu\cdot Ft_{i,j} & \text{otherwise} \end{cases}$$

$\max(Fax) = 12891.3 \cdot lbf$

Prepared By	Name/Date C.Bala 11/18/02	LOCKHEED MARTIN	Page No.7 1-1-5-1-7	File Name upr_ussip.mcd
Checked By	11/18/03	Science, Engineering, Analysis, & Test *Mechanical Systems Analysis Department*	Drawing Nc SEG39135788	
Title	**Upper Interface plate to USS Bolts 6-02a loads**			

Tensile and shear ratios

Tensile ratio:

$$Rt_{i,j} := \begin{cases} 0 & \text{if } Fax_{i,j} < 0 \\ \dfrac{Fax_{i,j}}{ftu_i} & \text{otherwise} \end{cases}$$

Shear ratio:

$$Rs_{i,j} := \frac{FF \cdot FSu \cdot Fs_{i,j}}{fsu_i}$$

$\max(Rt) = 0.46$ $\min(Rt) = 0.34$

$\max(Rs) = 0.26$ $\min(Rs) = -0.35$

Note: Rt is always positive because of the statement used in the Fax calculation
Rs may be positive or negative, since for shear either one is possible.

Calculate Margins of safety:

Guess K $K := 1.0$

GIVEN

$$(K \cdot |Rs|)^3 + (K \cdot Rt)^2 = 1$$

$K(Rs, Rt) := FIND(K)$

Note: Absolute value sign for Rs is necessary since shear may be positive or negatve

Margin of safety: $MSb_{i,j} := K(Rs_{i,j}, Rt_{i,j}) - 1$

$\min(MSb) = 0.96$

$\text{rows}(MSb) = 8$

$\text{cols}(MSb) = 1024$

Prepared By	Name/Date C.Bala 11/18/02	LOCKHEED MARTIN	Page No.8 1-1-S.1-8	File Name upr_ussip.mcd
Checked By	11/18/03	Science, Engineering, Analysis, & Test *Mechanical Systems Analysis Department*	Drawing No	SEG39135788
Title	**Upper Interface plate to USS Bolts 6-02a loads**			

Shear Pin Analysis **(Custom 455, H950 bar, AMS5617)**

Diameter of shear pin $dp := 0.875 \cdot in$

Loads in shear pin $Fsp_j := \sqrt{(Fy\_boltcg_j)^2 + (Fz\_boltcg_j)^2}$

Allowable shear stress $Fsu := 133000 \cdot psi$ (Ref. MIL-HDBK-5H, table 2.6.4.0(b))

Temperature correction factor $csp := 0.98$ (Ref. MIL-HDBK-5H, table 2.6.3.2.1)

Shear Area of pin $Ash := \frac{\pi \cdot (dp)^2}{4}$ $Ash = 0.601 \cdot in^2$

Allowable shear load $Pall_j := Fsu \cdot Ash \cdot csp$

Margin of safety $MSp_j := \left(\frac{Pall_j}{Fsp_j \cdot FSu} - 1 \right)$ $rows(MSp) = 1024$

$min(MSp) = 0.33$ $cols(MSp) = 1$

Bearing of bushing on interface plate

Outer diameter of bushing $do := 1.375 \cdot in$

Thickness of interface plate $tp := 0.75 \cdot in$

Bearing area $Ab := do \cdot tp$ $Ab = 1.03 \cdot in^2$

Allowable bearing stress $Fbru := 141000 \cdot psi$ (Ref. MIL-HDBK-5H, table 3.7.3.0 (b) 2.5 in. thick)

$Fbry := 104000 \cdot psi$

Trmperature correction factor for 7050-T7451 plate $cpu := 0.92$ (Ref. MIL-HDBK-5H, fig. 3.7.3.2.1)

$cpy := 0.98$

Allowable bearing load $Pbru_j := Fbru \cdot Ab \cdot cpu$

$Pbry_j := Fbry \cdot Ab \cdot cpy$

Margin of safety $MSu_j := \frac{Pbru_j}{Fsp_j \cdot FSu} - 1$

$MSy_j := \frac{Pbry_j}{Fsp_j \cdot FSy} - 1$

$\min(MSu) = 1.28$

$\min(MSy) = 1.28$

Bearing of bushing on USS-02 bracket is not critical since the bearing thickness is 1.5 in. compared to 0.75 in on the interface plate. So the margin of safety is high.

Bearing of shear pin on Bushing

Diameter of shear pin $dpin := 0.875 \cdot in$

Thickness of bushing $tpin := 0.78 \cdot in$ (Ref. Drg. SDG39135772-013)

Bearing area $Abp := dpin \cdot tpin$ $Abp = 0.68 \cdot in^2$

Bushing is made of Aluminum Bronze AMS4640, ASTM B150 alloy, C63000

Allowable bearing stress of bushing $Fbru := 125000 \cdot psi$ (Ref. Rockwell Materials data sheet 09.12.01.01,1.0 to 2.0 in. thick)

$Fbry := 78000 \cdot psi$

Allowable bearing load $Pbru_j := Fbru \cdot Abp \cdot ctu$

$Pbry_j := Fbry \cdot Abp \cdot cty$

Margin of safety $MSbru_j := \frac{Pbru_j}{Fsp_j \cdot FSu} - 1$ $MSbry_j := \frac{Pbry_j}{Fsp_j \cdot FSy} - 1$

$\min(MSbru) = 0.42$ $\quad rows(MSbru) = 1024$ $\quad cols(MSbru) = 1$

$\min(MSbry) = 0.13$ $\quad rows(MSbry) = 1024$ $\quad cols(MSbry) = 1$

Interface plate inserts

The interface plate has MS51831 CA206L keenserts, and the 0.50-20 bolts from the USS bracket engage on the inserts.

Outer dia. of inserts $D := \begin{bmatrix} 0.6875 \\ 0.6875 \\ 0.6875 \\ 0.6875 \\ 0.6875 \\ 0.6875 \\ 0.6875 \\ 0.6875 \end{bmatrix} \cdot in$

Length of inserts $L := \begin{bmatrix} 0.6875 \\ 0.6875 \\ 0.6875 \\ 0.6875 \\ 0.6875 \\ 0.6875 \\ 0.6875 \\ 0.6875 \end{bmatrix} \cdot in$

Shear Area $A_i := \pi \cdot \frac{(D_i \cdot L_i)}{2}$ $\quad A = \begin{bmatrix} 0.742 \\ 0.742 \\ 0.742 \\ 0.742 \\ 0.742 \\ 0.742 \\ 0.742 \\ 0.742 \end{bmatrix} \cdot in^2$

Material of interface plate (upper) 7050-T7451 $\quad Fsu := \begin{bmatrix} 43000 \\ 43000 \\ 43000 \\ 43000 \\ 43000 \\ 43000 \\ 43000 \\ 43000 \end{bmatrix} \cdot psi$

(Ref. MIL-HDBK-5H, table 3.7.3.0(b1) 2.0 to 3.0 in. thick)

Prepared By	Name/Date C.Bala 11/18/02	LOCKHEED MARTIN	Page No.11 1-1-5-1-11	File Name upr_ussip.mcd
Checked By	[signature] 11/18/02	Science, Engineering, Analysis, & Test *Mechanical Systems Analysis Department*	Drawing No	SEG39135788
Title	**Upper Interface plate to USS Bolts 6-02a loads**			

Max shear stress $\tau_{i,j} := \frac{Fax_{i,j}}{A_i}$

Margin of safety $MSi_{i,j} := \frac{Fsu_i \cdot csu}{\tau_{i,j} \cdot FSu} - 1$

$\min(MSi) = 0.73$ $\quad$ $\text{rows}(MSi) = 8$

$\text{cols}(MSi) = 1024$

output1 := augment(data, MSb^T)

output2 := augment(output1, MSp)

output3 := augment(output2, MSi^T)

output4 := augment(output3, MSbru)

output5 := augment(output4, MSbry)

WRITEPRN("output_upperussipf.dat") := output5 $\quad$ rows(output5) = 1024

cols(output5) = 27

Worst cases:

kb := 1..8

kp := 1

ki := 1..8

kbru := 1

kbry := 1

L := 1..cols(output5)

Prepared By	Name/Date C.Bala 11/18/02	LOCKHEED MARTIN	Page No. 12 J.1-5.1-12	File Name upr_ussip.mcd
Checked By	[illegible] 1/10/03	Science, Engineering, Analysis, & Test *Mechanical Systems Analysis Department*	Drawing No SEG39135788	
Title	**Upper Interface plate to USS Bolts 6-02a loads**			

$$worstb_{kb,L} := \left[\left(csort(output5, kb + 8)^T \right)^{\langle 1 \rangle} \right]_L$$ Sort using the bolt margins

$$boltmin_{2,kb} := worstb_{kb,(kb+8)} \qquad boltmin_{1,kb} := kb$$

$$tempb := csort\left(boltmin^T, 2\right)$$

$$minsum_{1,1} := tempb_{1,1}$$ Determine the bolt with the lowest margin

$$worstp_{kp,L} := \left[\left(csort(output5, kp + 16)^T \right)^{\langle 1 \rangle} \right]_L$$

$$pinmin_{2,kp} := worstp_{kp,(kp+16)} \qquad pinmin_{1,kp} := kp$$

$$tempp := csort\left(pinmin^T, 2\right)$$

$$minsum_{1,2} := tempp_{1,1}$$

$$worsti_{ki,L} := \left[\left(csort(output5, ki + 17)^T \right)^{\langle 1 \rangle} \right]_L$$

$$inmin_{2,ki} := worsti_{ki,(ki+17)} \qquad inmin_{1,ki} := ki$$

$$tempi := csort\left(inmin^T, 2\right)$$

$$minsum_{1,3} := tempi_{1,1}$$

$$worstbru_{kbru,L} := \left[\left(csort(output5, kbru + 25)^T \right)^{\langle 1 \rangle} \right]_L$$

$$brumin_{2,kbru} := worstbru_{kbru,(kbru+25)} \qquad brumin_{1,kbru} := kbru$$

$$tempbru := csort\left(brumin^T, 2\right) \qquad minsum_{1,4} := tempbru_{1,1}$$

Prepared By	Name/Date C.Bala 11/18/02	LOCKHEED MARTIN	Page No. 13 1.1.5.1-13	File Name upr_ussip.mcd
Checked By	[illegible] 1/10/03	Science, Engineering, Analysis, & Test *Mechanical Systems Analysis Department*	Drawing No	SEG39135788
Title		**Upper Interface plate to USS Bolts 6-02a loads**		

$$worstbry_{kbry,L} := \left[\left(csort(output5, kbry + 26)^T \right)^{<1>} \right]_L$$

$$brymin_{2,kbry} := worstbry_{kbry,(kbry+26)} \qquad brymin_{1,kbry} := kbry$$

$$tempbry := csort\left(brymin^T, 2\right) \qquad cols(worstb) = 27$$

$$minsum_{1,5} := tempbry_{1,1} \qquad rows(worstb) = 8$$

(Ref. figure on page 2 for bolt, pin and insert locations)

	BOLTS	PIN	INSERTS	BEARING Ultimate	BEARING Yield
	$worstb_{minsum_{1,1},L}$	$worstp_{minsum_{1,2},L}$	$worsti_{minsum_{1,3},L}$	$worstbru_{minsum_{1,4},L}$	$worstbry_{minsum_{1,5},L}$
ID	66004	66001	66002	66001	66001
case	1009	1016	1038	1016	1016
Fx	-7687	-40984	39994	-40984	-40984
Fy	15013	41532	40654	41532	41532
Fz	-680	5895	-6927	5895	5895
Mx	-92721	-40476	-39695	-40476	-40476
My	-11023	-27751	31990	-27751	-27751
Mz	-56340	17497	27577	17497	17497
B1	0.96	1.696	1.386	1.696	1.696
B2	1.27	1.693	1.35	1.693	1.693
B3	1.091	1.599	1.265	1.599	1.599
B4	1.231	1.829	1.355	1.829	1.829
B5	1.448	1.718	1.234	1.718	1.718
B6	0.982	1.836	1.266	1.836	1.836
B7	1.304	1.84	1.231	1.84	1.84
B8	1.114	1.73	1.156	1.73	1.73
PIN	2.725	0.335	0.357	0.335	0.335
I1	0.902	1.204	0.929	1.204	1.204
I2	1.017	1.159	0.876	1.159	1.159
I3	1.147	1.117	0.825	1.117	1.117
I4	0.921	1.266	0.876	1.266	1.266
I5	1.171	1.174	0.778	1.174	1.174
I6	0.94	1.331	0.827	1.331	1.331
I7	1.06	1.282	0.779	1.282	1.282
I8	1.196	1.234	0.734	1.234	1.234
Br u	2.974	0.424	0.448	0.424	0.424
Br y	2.156	0.131	0.15	0.131	0.131