AMS-02 Cryogenic Magnet Suspension Straps

Fracture Analysis of Pins

Prepared By	Name/Date Saike Wang 3/20/02	LOCKHEED MARTIN Science, Engineering, Analysis, & Test *Mechanical Systems Analysis Department.*	Page/Section No. 1	File Name Cryopin_ff
Checked By	3/20/02		Drawing No.	SCD0678
Title	AMS-02 Magnet Strap Clevis pin(Cryo) Section F-F.			

SC07

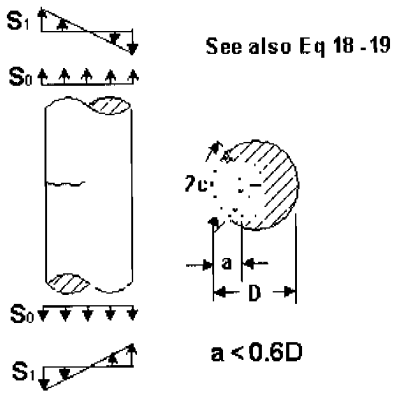

Material: AISI 316LN (-452F)
NASA/FLAGRO Crack case type: SC07

Section Properties:

Pin diameter D = 0.75 in.

Crack Properties:

a = 0.06839 in.(dye penetrant)

Stress:

Axial Stress S0 = 0.0 ksi
Bending stress S3 = 99.223 ksi (ref. C1W1_1clevis, pg.10)

Prepared By	Name/Date Saike Wang 3/20/02	LOCKHEED MARTIN	Page/Section No. 2	File Name Cryopin_ff
Checked By	3/22/02	Science, Engineering, Analysis, & Test Mechanical Systems Analysis Department.	Drawing No.	SCD0678
Title	AMS-02 Magnet Clevis Pin (Cryo) Section F-F			

This pin attaches the C1W1 strap to the clevis on the Race track end frame. (Ref drawing SCD0825, sheet 2 section C-C)
This pin is at cryogenic temperature (-452F) for Truck transportation, Air transportation, On - Orbit condition and Launch/Landing conditions. The Flagro analysis uses the truck, Air, On-Orbit and Launch/Landing case spectrums at cryo temp.
The material data used is from code F3KA13LA2 from the NASGRO library, except that the UTS and YS are changed as per the material property for the 316LN Hiproof material as per OIE205 Rev.d , page 25.

The truck, air, on orbit spectrums are run for 1 mission with a scatter factor of 4 and the Launch/Landing spectrum is run for 3 missions with a scatter factor of 4. Dye penetrant inspection is used to inspect the pin, and the standard dye penetrant crack size c = 0.075 in. is used. (Ref. JSC22267A, table 2).

FATIGUE CRACK GROWTH ANALYSIS

DATE: 03/12/02 TIME: 13:51:56
(computed: NASGRO Version 3.0.4, Jan 2000.)
U.S. customary units [inches, ksi, ksi sqrt(in)]

PROBLEM TITLE

F-F Pin With Cold Launch and Landing | For AMS-02 Magnet Race Track Clevis, With Four Blocks: Truck, Air, On-Orbit, Launch & Landing) |Ref. Drg. SCD0678, issue 07)

Crack Growth Model: Non Interaction
Equation/Table : NASGRO Equation

GEOMETRY
MODEL: SC07-Part-circular Surf. crk on cylinder circ. plane.

Cylinder Diameter, D = 0.7500

FLAW SIZE (Standard NASA JSC NDE):
Method of Inspection: Dye Penetrant

a (init.) = 0.6839E-01

MATERIAL
MATL 1: Edited file data ~2211
~2221
Material Header Info.:

Material 1 Data ID: F3KA13LA2
Alloy Description : AISI 316/316L ~2611

Alloy Cond/HT : Ann sht & plt ; -452F LHe
~2621
Product Form : ~2631

Environment : ~2641
Specimen Type :
Specimen Orientation :
Specimen Thickness :
Specimen Width :
Specimen Test Frequency :
Data Reference :

Material Properties:

Matl No.	UTS	YS	K1e	K1c	Ak	Bk	Thk	Kc	Keac
1	**203.1**	**162.5**	280.0	200.0				200.0	

Matl No.	Crack Growth Eqn Constants C	n	p	q	DKo	Cth+	Cth-	Rcl	Alpha	Smax/SIGo
1	0.220D-09	3.200	0.25	0.25	8.00	1.50	0.10	0.70	2.50	0.30

F-F Pin With Cold Launch and Landing
MODEL: SC07
The UTS and YS refer to OIE205 Rev. D, Page 25 for 316L Hi-proof pins

FATIGUE SCHEDULE BLOCK INPUT TABLE

Four Blocks of VCMAGNET With All Cold ~

[Note: Stress = Input Value * Scale Factor]

Stress Scaling Factors for Block Case: **1 (TRUCK3-VCMAGNET)**

Scale Factor for Stress S0: 0.0000
Scale Factor for Stress S1: 0.99223 **(Ref. CIWI_clevis.mcd, Page 10)**

Stress Scaling Factors for Block Case: **2 (AIR3-VCMAGNET)**

Scale Factor for Stress S0: 0.0000
Scale Factor for Stress S1: 0.99223

Stress Scaling Factors for Block Case: **3 (ONORBIT2-VCMAGNET)**

Scale Factor for Stress S0: 0.0000
Scale Factor for Stress S1: 0.99223

Stress Scaling Factors for Block Case: **4 (GSFC-VCMAGNET)**

Scale Factor for Stress S0: 0.0000
Scale Factor for Stress S1: 0.99223

Schedule info. was input manually

Total No. of Blocks in Schedule = 24

Block Number and Case Correspondences

Block Number From	-	To	Block Case No.
1	-	4	1
5	-	8	2
9	-	12	3
13	-	24	4

Stresses: Tension, bending or pin

F-F Pin With Cold Launch and Landing
MODEL: SC07

FATIGUE SCHEDULE BLOCK INPUT TABLE

Four Blocks of VCMAGNET With All Cold ~

BLOCK CASE NO. **1** **(TRUCK3-VCMAGNET)**

S T E P	M: A: T: L:	NUMBER OF FATIGUE CYCLES	S0 (t1)	S0 (t2)	S1 (t1)	S1 (t2)
1:	1:	1757.00 :	36.70:	5.60:	36.70:	5.60:
2:	1:	2148.00 :	30.10:	6.40:	30.10:	6.40:
3:	1:	13668.00 :	25.50:	6.90:	25.50:	6.90:
4:	1:	38857.00 :	21.90:	7.30:	21.90:	7.30:
5:	1:	110517.00 :	19.50:	7.50:	19.50:	7.50:
6:	1:	150546.00 :	17.80:	7.70:	17.80:	7.70:
7:	1:	195456.00 :	16.50:	7.90:	16.50:	7.90:
8:	1:	1440631.00 :	15.90:	7.90:	15.90:	7.90:

Environmental Crack Growth Check for Sustained Stresses
(Kmax less than Keac): NOT SET

BLOCK CASE NO. **2** **(AIR3-VCMAGNET)**

S T E P	M: A: T: L:	NUMBER OF FATIGUE CYCLES	S0 (t1)	S0 (t2)	S1 (t1)	S1 (t2)
1:	1:	17832.00 :	43.10:	4.90:	43.10:	4.90:
2:	1:	594.00 :	43.10:	4.90:	43.10:	4.90:
3:	1:	695448.00 :	22.60:	7.20:	22.60:	7.20:
4:	1:	30.00 :	43.10:	4.90:	43.10:	4.90:
5:	1:	17832.00 :	43.10:	4.90:	43.10:	4.90:

Environmental Crack Growth Check for Sustained Stresses
(Kmax less than Keac): NOT SET

BLOCK CASE NO. **3** **(ONORBIT2-VCMAGNET)**

S T E P	M: A: T: L:	NUMBER OF FATIGUE CYCLES	S0 (t1)	S0 (t2)	S1 (t1)	S1 (t2)
1:	1:	34.00 :	14.10:	8.50:	14.10:	8.50:
2:	1:	34.00 :	13.90:	8.50:	13.90:	8.50:
3:	1:	60.00 :	13.70:	8.50:	13.70:	8.50:
4:	1:	179.00 :	13.50:	8.50:	13.50:	8.50:
5:	1:	117.00 :	14.10:	8.50:	14.10:	8.50:
6:	1:	414.00 :	13.90:	8.50:	13.90:	8.50:
7:	1:	2404.00 :	13.70:	8.50:	13.70:	8.50:
8:	1:	9789.00 :	13.50:	8.50:	13.50:	8.50:
9:	1:	62675.00 :	13.40:	8.50:	13.40:	8.50:

Environmental Crack Growth Check for Sustained Stresses
(Kmax less than Keac): NOT SET

BLOCK CASE NO. **4** **(GSFC-VCMAGNET)**

STEP	MAT	NUMBER OF FATIGUE CYCLES	S0 (t1)	S0 (t2)	S1 (t1)	S1 (t2)
1	1	2.00	96.10	3.90	96.10	3.90
2	1	4.00	88.10	4.30	88.10	4.30
3	1	8.00	80.00	4.80	80.00	4.80
4	1	15.00	72.00	5.20	72.00	5.20
5	1	49.00	64.00	5.60	64.00	5.60
6	1	81.00	55.90	6.00	55.90	6.00
7	1	178.00	47.90	6.40	47.90	6.40
8	1	641.00	39.90	6.80	39.90	6.80
9	1	3120.00	31.90	7.20	31.90	7.20
10	1	3405.00	23.80	7.60	23.80	7.60
11	1	5019.00	21.40	7.80	21.40	7.80
12	1	28853.00	19.80	7.80	19.80	7.80
13	1	91655.00	18.20	7.90	18.20	7.90

Environmental Crack Growth Check for Sustained Stresses
(Kmax less than Keac): NOT SET

F-F Pin With Cold Launch and Landing
MODEL: SC07

FATIGUE SCHEDULE BLOCK STRESS TABLE

Four Blocks of VCMAGNET With All Cold ~

STEP	MAT	NUMBER OF FATIGUE CYCLES	S0 (ksi) (t1)	S0 (ksi) (t2)	S1 (ksi) (t1)	S1 (ksi) (t2)
1	1	1757.00	0.00	0.00	36.41	5.56
2	1	2148.00	0.00	0.00	29.87	6.35
3	1	13668.00	0.00	0.00	25.30	6.85
4	1	38857.00	0.00	0.00	21.73	7.24
5	1	110517.00	0.00	0.00	19.35	7.44
6	1	150546.00	0.00	0.00	17.66	7.64
7	1	195456.00	0.00	0.00	16.37	7.84
8	1	1440631.00	0.00	0.00	15.78	7.84

Environmental Crack Growth Check for Sustained Stresses
(Kmax less than Keac): NOT SET

F-F Pin With Cold Launch and Landing
MODEL: SC07

FATIGUE SCHEDULE BLOCK STRESS TABLE

Four Blocks of VCMAGNET With All Cold ~

S T E P	M: A: T: L:	NUMBER OF FATIGUE CYCLES	S0 (ksi) (t1)	S0 (ksi) (t2)	S1 (ksi) (t1)	S1 (ksi) (t2)
1:	1:	17832.00	0.00:	0.00:	42.77:	4.86:
2:	1:	594.00	0.00:	0.00:	42.77:	4.86:
3:	1:	695448.00	0.00:	0.00:	22.42:	7.14:
4:	1:	30.00	0.00:	0.00:	42.77:	4.86:
5:	1:	17832.00	0.00:	0.00:	42.77:	4.86:

Environmental Crack Growth Check for Sustained Stresses
(Kmax less than Keac): NOT SET

F-F Pin With Cold Launch and Landing
MODEL: SC07

FATIGUE SCHEDULE BLOCK STRESS TABLE

Four Blocks of VCMAGNET With All Cold ~

S T E P	M: A: T: L:	NUMBER OF FATIGUE CYCLES	S0 (ksi) (t1)	S0 (ksi) (t2)	S1 (ksi) (t1)	S1 (ksi) (t2)
1:	1:	34.00	0.00:	0.00:	13.99:	8.43:
2:	1:	34.00	0.00:	0.00:	13.79:	8.43:
3:	1:	60.00	0.00:	0.00:	13.59:	8.43:
4:	1:	179.00	0.00:	0.00:	13.40:	8.43:
5:	1:	117.00	0.00:	0.00:	13.99:	8.43:
6:	1:	414.00	0.00:	0.00:	13.79:	8.43:
7:	1:	2404.00	0.00:	0.00:	13.59:	8.43:
8:	1:	9789.00	0.00:	0.00:	13.40:	8.43:
9:	1:	62675.00	0.00:	0.00:	13.30:	8.43:

Environmental Crack Growth Check for Sustained Stresses
(Kmax less than Keac): NOT SET

F-F Pin With Cold Launch and Landing
MODEL: SC07

FATIGUE SCHEDULE BLOCK STRESS TABLE

Four Blocks of VCMAGNET With All Cold ~

S T E P	M: A: T: L:	NUMBER OF FATIGUE CYCLES	S0 (ksi) (t1)	S0 (ksi) (t2)	S1 (ksi) (t1)	S1 (ksi) (t2)
1:	1:	2.00	0.00:	0.00:	95.35:	3.87:
2:	1:	4.00	0.00:	0.00:	87.42:	4.27:
3:	1:	8.00	0.00:	0.00:	79.38:	4.76:
4:	1:	15.00	0.00:	0.00:	71.44:	5.16:
5:	1:	49.00	0.00:	0.00:	63.50:	5.56:

6:	1:	81.00 :	0.00:	0.00:	55.47:	5.95:
7:	1:	178.00 :	0.00:	0.00:	47.53:	6.35:
8:	1:	641.00 :	0.00:	0.00:	39.59:	6.75:
9:	1:	3120.00 :	0.00:	0.00:	31.65:	7.14:
10:	1:	3405.00 :	0.00:	0.00:	23.62:	7.54:
11:	1:	5019.00 :	0.00:	0.00:	21.23:	7.74:
12:	1:	28853.00 :	0.00:	0.00:	19.65:	7.74:
13:	1:	91655.00 :	0.00:	0.00:	18.06:	7.84:

Environmental Crack Growth Check for Sustained Stresses
(Kmax less than Keac): NOT SET

F-F Pin With Cold Launch and Landing
MODEL: SC07

ANALYSIS RESULTS:

Schedl	Blk Step	Cycles	Flaw Size a	Flaw Size c	K max a-tip
1	1	1953580.	0.0686	0.0752	10.348 t
1	2	3907160.	0.0688	0.0755	10.362 t
1	3	5860740.	0.0690	0.0757	10.375 t
1	4	7814320.	0.0692	0.0760	10.389 t
1	5	8546056.	0.0757	0.0838	12.699
1	6	9277792.	0.0833	0.0932	13.287
1	7	10009528.	0.0922	0.1045	13.948
1	8	10741264.	0.1029	0.1183	14.704
1	9	10816970.	0.1029	0.1183	4.805 t
1	10	10892676.	0.1029	0.1183	4.805 t
1	11	10968382.	0.1029	0.1183	4.805 t
1	12	11044088.	0.1029	0.1183	4.805 t
1	13	11177118.	0.1036	0.1193	32.749 t
1	14	11310148.	0.1044	0.1202	32.856 t
1	15	11443178.	0.1051	0.1211	32.965 t
1	16	11576208.	0.1058	0.1221	33.074 t
1	17	11709238.	0.1065	0.1231	33.185 t
1	18	11842268.	0.1073	0.1241	33.297 t
1	19	11975298.	0.1080	0.1251	33.410 t
1	20	12108328.	0.1088	0.1261	33.524 t
1	21	12241358.	0.1096	0.1271	33.640 t
1	22	12374388.	0.1104	0.1282	33.756 t
1	23	12507418.	0.1112	0.1292	33.874 t
1	24	12640448.	0.1120	0.1303	33.994 t

FINAL RESULTS:
Critical Crack Size has NOT been reached.

at Cycle No. 91655.00
of Load Step No. 13 Description: None
of Block No. 24
of Schedule No. 1
Crack Size a = 0.111968
Total Cycles = 12640448.

t - indicates this step or a step in this block was below threshold
Corresponding semi crack length, c = 0.130290

Prepared By	Name/Date Saike wang 3/20/02	LOCKHEED MARTIN	Page/Section No. 1	File Name Coldpin_ff
Checked By	3/22/02	Science, Engineering, Analysis, & Test Mechanical Systems Analysis Department.	Drawing No.	
Title	AMS-02 Magnet strap Clevis (Cold) Section F-F.			

SC07

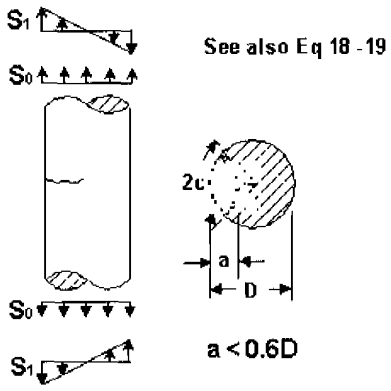

Material: AISI 316LN (-452F)
NASA/FLAGRO Crack case type: SC07

Section Properties:

Pin diameter D = 0.748 in.

Crack Properties:

a = 0.06839 in.(dye penetrant)

Stress:

Axial Stress S0 = 0.0 ksi
Bending stress S3 = 99.223 ksi (ref. C1W1_clevis, pg.10)

Prepared By	Name/Date Saike Wang 3/20/02	LOCKHEED MARTIN	Page/Section No. 2	File Name Coldpin_ff
Checked By	3/22/02	Science, Engineering, Analysis, & Test Mechanical Systems Analysis Department.	Drawing No.	
Title	AMS-02 Magnet Clevis Pin (Cold) section F-F			

This pin attaches the C1W1 strap to the clevis on the Race track end frame. (Ref drawing SCD0825, sheet 2 section C-C)
This pin is at cryogenic temperature (-452F) for Truck transportation, Air transportation, Launch and On - Orbit conditions. The Flagro analysis uses the truck, Air, On-Orbit and Launch case spectrums at cryo temp.
The material data used is from code F3KA13LA2 from the NASGRO library, except that the UTS and YS are changed as per the material property for the 316LN Hiproof material as per OIE205 Rev.d , page 25.

The truck, air, on orbit spectrums are run for 1 mission with a scatter factor of 4 and the Launch spectrum is run for 3 missions with a scatter factor of 4. The final crack from this run is used as the initial crack size for the analysis for the warm landing case.

Dye penetrant inspection is used to inspect the pin and the standard dye penetrant crack size c = 0.075 in. is used (Ref. JSC22267A, table 2)

FATIGUE CRACK GROWTH ANALYSIS

DATE: 03/13/02 TIME: 09:41:43
(computed: NASGRO Version 3.0.4, Jan 2000.)
U.S. customary units [inches, ksi, ksi sqrt(in)]

PROBLEM TITLE

F-F Pin With Only Cold Launch for AMS-02 Magnet Race track clevis With four blocks: Truck, Air, On-orbit and Launch (Ref. Drg. SCD0678, issue 07)
Crack Growth Model: Non Interaction
Equation/Table : NASGRO Equation

GEOMETRY

MODEL: SC07-Part-circular Surf. crk on cylinder circ. plane.

Cylinder Diameter, D = 0.7500

FLAW SIZE (Standard NASA JSC NDE):
Method of Inspection: Dye Penetrant

a (init.) = 0.6839E-01

MATERIAL

MATL 1: Edited file data ~2211
~2221

Material Header Info.:

Material 1 Data ID: F3KA13LA2
Alloy Description : AISI 316/316L ~2611

Alloy Cond/HT : Ann sht & plt ; -452F LHe
~2621
Product Form : ~2631

Environment : ~2641

Specimen Type :
Specimen Orientation :
Specimen Thickness :
Specimen Width :
Specimen Test Frequency :
Data Reference :

Material Properties:

Matl: No.	UTS	YS	K1e	K1c	Ak	Bk	Thk	Kc	Keac
1	**203.1**	**162.5**	280.0	200.0				200.0	

Matl No.	Crack Growth Eqn Constants								
	C	n	p	q	DKo	Cth+	Cth-	Rcl	Alpha	Smax/SIGo
1	0.220D-09	3.200	0.25	0.25	8.00	1.50	0.10	0.70	2.50	0.30

F-F Pin With Only Cold Launch **(Ref. OIE205, rev.d,page 25 for UTS and YS for 316L Hi-proof pin)**

MODEL: SC07

FATIGUE SCHEDULE BLOCK INPUT TABLE

Four Blocks of VCMAGNET With All Cold ~

[Note: Stress = Input Value * Scale Factor]

Stress Scaling Factors for Block Case: **1** **(TRUCK3-VCMAGNET)**

Scale Factor for Stress S0: 0.0000
Scale Factor for Stress S1: 0.99223 **(Ref. C1W1_clevis.mcd, page 10)**

Stress Scaling Factors for Block Case: **2** **(AIR3-VCMAGNET)**

Scale Factor for Stress S0: 0.0000
Scale Factor for Stress S1: 0.99223

Stress Scaling Factors for Block Case: **3** **(ONORBIT2-VCMAGNET)**

Scale Factor for Stress S0: 0.0000
Scale Factor for Stress S1: 0.99223

Stress Scaling Factors for Block Case: **4** **(LIFTOFF-ONLY)**

Scale Factor for Stress S0: 0.0000
Scale Factor for Stress S1: 0.99223

Schedule info. was input manually

Total No. of Blocks in Schedule = 24

Block Number and Case Correspondences

Block Number From	-	To	Block Case No.
1	-	4	1
5	-	8	2
9	-	12	3
13	-	24	4

Stresses: Tension, bending or pin

F-F Pin With Only Cold Launch
MODEL: SC07

FATIGUE SCHEDULE BLOCK INPUT TABLE

Four Blocks of VCMAGNET With All Cold ~

BLOCK CASE NO. **1** **(TRUCK3-VCMAGNET)**

S T E P	M: A: T: L:	NUMBER OF FATIGUE CYCLES	S0 (t1)	S0 (t2)	S1 (t1)	S1 (t2)
1:	1:	1757.00	36.70:	5.60:	36.70:	5.60:
2:	1:	2148.00	30.10:	6.40:	30.10:	6.40:
3:	1:	13668.00	25.50:	6.90:	25.50:	6.90:
4:	1:	38857.00	21.90:	7.30:	21.90:	7.30:
5:	1:	110517.00	19.50:	7.50:	19.50:	7.50:
6:	1:	150546.00	17.80:	7.70:	17.80:	7.70:
7:	1:	195456.00	16.50:	7.90:	16.50:	7.90:
8:	1:	1440631.00	15.90:	7.90:	15.90:	7.90:

Environmental Crack Growth Check for Sustained Stresses
(Kmax less than Keac): NOT SET

BLOCK CASE NO. **2** **(AIR3-VCMAGNET)**

S T E P	M: A: T: L:	NUMBER OF FATIGUE CYCLES	S0 (t1)	S0 (t2)	S1 (t1)	S1 (t2)
1:	1:	17832.00	43.10:	4.90:	43.10:	4.90:
2:	1:	594.00	43.10:	4.90:	43.10:	4.90:
3:	1:	695448.00	22.60:	7.20:	22.60:	7.20:
4:	1:	30.00	43.10:	4.90:	43.10:	4.90:
5:	1:	17832.00	43.10:	4.90:	43.10:	4.90:

Environmental Crack Growth Check for Sustained Stresses
(Kmax less than Keac): NOT SET

BLOCK CASE NO. **3** **(ONORBIT2-VCMAGNET)**

S T E P	M: A: T: L:	NUMBER OF FATIGUE CYCLES	S0 (t1)	S0 (t2)	S1 (t1)	S1 (t2)
1:	1:	34.00	14.10:	8.50:	14.10:	8.50:
2:	1:	34.00	13.90:	8.50:	13.90:	8.50:
3:	1:	60.00	13.70:	8.50:	13.70:	8.50:
4:	1:	179.00	13.50:	8.50:	13.50:	8.50:
5:	1:	117.00	14.10:	8.50:	14.10:	8.50:
6:	1:	414.00	13.90:	8.50:	13.90:	8.50:
7:	1:	2404.00	13.70:	8.50:	13.70:	8.50:
8:	1:	9789.00	13.50:	8.50:	13.50:	8.50:
9:	1:	62675.00	13.40:	8.50:	13.40:	8.50:

Environmental Crack Growth Check for Sustained Stresses
(Kmax less than Keac): NOT SET

BLOCK CASE NO. **4** **(LIFTOFF-ONLY)**

S T E P	M: A: T: L:	NUMBER OF FATIGUE CYCLES	S0 (t1)	S0 (t2)	S1 (t1)	S1 (t2)
1	1	1.00	96.10	3.90	96.10	3.90
2	1	3.00	88.10	4.30	88.10	4.30
3	1	5.00	80.00	4.80	80.00	4.80
4	1	12.00	72.00	5.20	72.00	5.20
5	1	46.00	64.00	5.60	64.00	5.60
6	1	78.00	55.90	6.00	55.90	6.00
7	1	165.00	47.90	6.40	47.90	6.40
8	1	493.00	39.90	6.80	39.90	6.80
9	1	2229.00	31.90	7.20	31.90	7.20
10	1	2132.00	23.80	7.60	23.80	7.60
11	1	2920.00	21.40	7.80	21.40	7.80
12	1	22272.00	19.80	7.80	19.80	7.80
13	1	82954.00	18.20	7.90	18.20	7.90

Environmental Crack Growth Check for Sustained Stresses
(Kmax less than Keac): NOT SET

F-F Pin With Only Cold Launch
MODEL: SC07

FATIGUE SCHEDULE BLOCK STRESS TABLE

Four Blocks of VCMAGNET With All Cold ~

S T E P	M: A: T: L:	NUMBER OF FATIGUE CYCLES	S0 (ksi) (t1)	S0 (ksi) (t2)	S1 (ksi) (t1)	S1 (ksi) (t2)
1	1	1757.00	0.00	0.00	36.41	5.56
2	1	2148.00	0.00	0.00	29.87	6.35
3	1	13668.00	0.00	0.00	25.30	6.85
4	1	38857.00	0.00	0.00	21.73	7.24
5	1	110517.00	0.00	0.00	19.35	7.44
6	1	150546.00	0.00	0.00	17.66	7.64
7	1	195456.00	0.00	0.00	16.37	7.84
8	1	1440631.00	0.00	0.00	15.78	7.84

Environmental Crack Growth Check for Sustained Stresses
(Kmax less than Keac): NOT SET

F-F Pin With Only Cold Launch
MODEL: SC07

FATIGUE SCHEDULE BLOCK STRESS TABLE

Four Blocks of VCMAGNET With All Cold ~

S	M:	NUMBER	S0	S1

T E P	A: T: L:	OF FATIGUE CYCLES	S0 (ksi) (t1)	S0 (ksi) (t2)	S1 (ksi) (t1)	S1 (ksi) (t2)
1:	1:	17832.00	0.00:	0.00:	42.77:	4.86:
2:	1:	594.00	0.00:	0.00:	42.77:	4.86:
3:	1:	695448.00	0.00:	0.00:	22.42:	7.14:
4:	1:	30.00	0.00:	0.00:	42.77:	4.86:
5:	1:	17832.00	0.00:	0.00:	42.77:	4.86:

Environmental Crack Growth Check for Sustained Stresses
(Kmax less than Keac): NOT SET

F-F Pin With Only Cold Launch
MODEL: SC07

FATIGUE SCHEDULE BLOCK STRESS TABLE

Four Blocks of VCMAGNET With All Cold ~

S T E P	M: A: T: L:	NUMBER OF FATIGUE CYCLES	S0 (ksi) (t1)	S0 (ksi) (t2)	S1 (ksi) (t1)	S1 (ksi) (t2)
1:	1:	34.00	0.00:	0.00:	13.99:	8.43:
2:	1:	34.00	0.00:	0.00:	13.79:	8.43:
3:	1:	60.00	0.00:	0.00:	13.59:	8.43:
4:	1:	179.00	0.00:	0.00:	13.40:	8.43:
5:	1:	117.00	0.00:	0.00:	13.99:	8.43:
6:	1:	414.00	0.00:	0.00:	13.79:	8.43:
7:	1:	2404.00	0.00:	0.00:	13.59:	8.43:
8:	1:	9789.00	0.00:	0.00:	13.40:	8.43:
9:	1:	62675.00	0.00:	0.00:	13.30:	8.43:

Environmental Crack Growth Check for Sustained Stresses
(Kmax less than Keac): NOT SET

F-F Pin With Only Cold Launch
MODEL: SC07

FATIGUE SCHEDULE BLOCK STRESS TABLE

Four Blocks of VCMAGNET With All Cold ~

S T E P	M: A: T: L:	NUMBER OF FATIGUE CYCLES	S0 (ksi) (t1)	S0 (ksi) (t2)	S1 (ksi) (t1)	S1 (ksi) (t2)
1:	1:	1.00	0.00:	0.00:	95.35:	3.87:
2:	1:	3.00	0.00:	0.00:	87.42:	4.27:
3:	1:	5.00	0.00:	0.00:	79.38:	4.76:
4:	1:	12.00	0.00:	0.00:	71.44:	5.16:
5:	1:	46.00	0.00:	0.00:	63.50:	5.56:
6:	1:	78.00	0.00:	0.00:	55.47:	5.95:
7:	1:	165.00	0.00:	0.00:	47.53:	6.35:

8:	1:	493.00 :	0.00:	0.00:	39.59:	6.75:
9:	1:	2229.00 :	0.00:	0.00:	31.65:	7.14:
10:	1:	2132.00 :	0.00:	0.00:	23.62:	7.54:
11:	1:	2920.00 :	0.00:	0.00:	21.23:	7.74:
12:	1:	22272.00 :	0.00:	0.00:	19.65:	7.74:
13:	1:	82954.00 :	0.00:	0.00:	18.06:	7.84:

Environmental Crack Growth Check for Sustained Stresses
(Kmax less than Keac): NOT SET

F-F Pin With Only Cold Launch
MODEL: SC07

ANALYSIS RESULTS:

Schedl	Blk Step	Cycles	Flaw Size a	Flaw Size c	K max a-tip
1	1	1953580.	0.0686	0.0752	10.348 t
1	2	3907160.	0.0688	0.0755	10.362 t
1	3	5860740.	0.0690	0.0757	10.375 t
1	4	7814320.	0.0692	0.0760	10.389 t
1	5	8546056.	0.0757	0.0838	12.699
1	6	9277792.	0.0833	0.0932	13.287
1	7	10009528.	0.0922	0.1045	13.948
1	8	10741264.	0.1029	0.1183	14.704
1	9	10816970.	0.1029	0.1183	4.805 t
1	10	10892676.	0.1029	0.1183	4.805 t
1	11	10968382.	0.1029	0.1183	4.805 t
1	12	11044088.	0.1029	0.1183	4.805 t
1	13	11157398.	0.1035	0.1191	32.747 t
1	14	11270708.	0.1041	0.1198	32.832 t
1	15	11384018.	0.1046	0.1205	32.917 t
1	16	11497328.	0.1052	0.1213	33.004 t
1	17	11610638.	0.1058	0.1221	33.091 t
1	18	11723948.	0.1064	0.1228	33.178 t
1	19	11837258.	0.1069	0.1236	33.267 t
1	20	11950568.	0.1075	0.1244	33.356 t
1	21	12063878.	0.1081	0.1252	33.446 t
1	22	12177188.	0.1087	0.1260	33.537 t
1	23	12290498.	0.1094	0.1268	33.628 t
1	24	12403808.	0.1100	0.1276	33.720 t

FINAL RESULTS:
Critical Crack Size has NOT been reached.

at Cycle No. 82954.00
of Load Step No. 13 Description: None
of Block No. 24
of Schedule No. 1
Crack Size a = 0.109977
Total Cycles = 12403808.

t - indicates this step or a step in this block was below threshold
Corresponding semi crack length, c = 0.127628

Prepared By	Name/Date Saike Wang 4/12/02	LOCKHEED MARTIN	Page/Section No. 1	File Name warmpin_ff
Checked By	4/12/02	Science, Engineering, Analysis, & Test Mechanical Systems Analysis Department.	Drawing No.	SCD0578
Title	AMS-02 Magnet Strap Clevis pin(warm) Section F-F.			

SC07

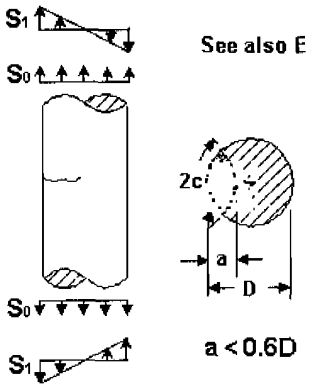

Material: AISI 316LN (75F)
NASA/FLAGRO Crack case type: SC07

Section Properties:

Pin diameter D = 0.75 in.

Crack Properties:

a = 0.110 in (Final crack size,Ref. FF-pin-cold-launch, page 6)

Stress:

Axial Stress S0 = 0.0 ksi
Bending stress S3 = 85.767 ksi (ref. C1W1_1clevis, pg.11)

Prepared By	Name/Date Saike Wang 4/12/02	LOCKHEED MARTIN	Page/Section No. 2	File Name warmpin_ff
Checked By	4/12/02	Science, Engineering, Analysis, & Test Mechanical Systems Analysis Department.	Drawing No.	SCD0678
Title	AMS-02 Magnet strap Clevis Pin (Warm) section F-F			

This pin attaches the C1W1 strap to the clevis on the Race track end frame. (Ref drawing SCD0825, sheet 2 section C-C)
This pin is at room temperature (75F) for Landing conditions. The Flagro analysis uses landing spectrum, at room temperature.
The material data used is from code F3KA13AB1 from the NASGRO library, except that the UTS and YS are changed as per the material property for the 316LN Hiproof material as per OIE205 Rev.d , page 25.

Landing spectrum is run for 3 missions with a scatter factor of 4. The final crack size from the cold launch condition is used as the initial crack size for the warm landing condition.

FATIGUE CRACK GROWTH ANALYSIS

DATE: 03/13/02 TIME: 15:04:56
(computed: NASGRO Version 3.0.4, Jan 2000.)
U.S. customary units [inches, ksi, ksi sqrt(in)]

PROBLEM TITLE

F-F Pin With Only Warm Landing for AMS-02 Magnet race track clevis

Crack Growth Model: Non Interaction
Equation/Table : NASGRO Equation

GEOMETRY

MODEL: SC07-Part-circular Surf. crk on cylinder circ. plane.

Cylinder Diameter, D = 0.7500

FLAW SIZE: (User specified)

a (init.) = 0.1100 (Ref. Final crack size from FF-pin-cold-launch page 5)

MATERIAL

MATL 1: Edited file data ~2211
~2221

Material Header Info.:

Material 1 Data ID: F3KA13AB1
Alloy Description : AISI 316/316L ~2611

Alloy Cond/HT : Ann sht & plt ~262
1
Product Form : ~2631

Environment : ~2641

Specimen Type :
Specimen Orientation :
Specimen Thickness :
Specimen Width :
Specimen Test Frequency :
Data Reference :

Material Properties:

Matl: No.	UTS	YS	K1e	K1c	Ak	Bk	Thk	Kc	Keac
1	**127.6**	**108.1**	280.0	200.0				200.0	

Matl: No.	Crack Growth Eqn Constants C	n	p	q	DKo	Cth+	Cth-	Rcl	Alpha	Smax/SIGo
1	0.800D-09	3.000	0.25	0.25	3.50	1.00	0.10	0.70	2.50	0.30

F-F Pin With Only Warm Landing **(Ref. OIE205, revD, page 25, for UTS and YS For 316l Hi proof pin)**

MODEL: SC07

FATIGUE SCHEDULE BLOCK INPUT TABLE

One Block of Warm Land Only

[Note: Stress = Input Value * Scale Factor]

Stress Scaling Factors for Block Case: 1

Scale Factor for Stress S0: 0.0000
Scale Factor for Stress S1: 0.85767 **[ref. C1W1-clevis.mcd Page 10)**

Schedule info. was input manually

Total No. of Blocks in Schedule = 12

Block Number and Case Correspondences

Block Number From - To	Block Case No.
1 - 12	1

Stresses: Tension, bending or pin

F-F Pin With Only Warm Landing
MODEL: SC07

FATIGUE SCHEDULE BLOCK INPUT TABLE

One Block of Warm Land Only

SINGLE DISTINCT BLOCK

STEP	MAT	NUMBER OF FATIGUE CYCLES	S0 (t1)	S0 (t2)	S1 (t1)	S1 (t2)
1:	1:	1.00 :	100.00:	3.70:	100.00:	3.70:
2:	1:	1.00 :	91.30:	4.20:	91.30:	4.20:
3:	1:	3.00 :	82.60:	4.70:	82.60:	4.70:
4:	1:	3.00 :	74.00:	5.20:	74.00:	5.20:
5:	1:	3.00 :	65.30:	5.70:	65.30:	5.70:
6:	1:	3.00 :	56.60:	6.10:	56.60:	6.10:
7:	1:	13.00 :	47.90:	6.60:	47.90:	6.60:
8:	1:	148.00 :	39.20:	7.10:	39.20:	7.10:
9:	1:	891.00 :	30.60:	7.60:	30.60:	7.60:
10:	1:	1273.00 :	21.90:	8.10:	21.90:	8.10:
11:	1:	2099.00 :	19.30:	8.20:	19.30:	8.20:
12:	1:	6581.00 :	17.50:	8.30:	17.50:	8.30:
13:	1:	8701.00 :	15.80:	8.40:	15.80:	8.40:

Environmental Crack Growth Check for Sustained Stresses
(Kmax less than Keac): NOT SET

F-F Pin With Only Warm Landing
MODEL: SC07

FATIGUE SCHEDULE BLOCK STRESS TABLE

One Block of Warm Land Only

STEP	MAT	NUMBER OF FATIGUE CYCLES	S0 (ksi) t1	S0 (ksi) t2	S1 (ksi) t1	S1 (ksi) t2
1	1	1.00	0.00	0.00	85.77	3.17
2	1	1.00	0.00	0.00	78.31	3.60
3	1	3.00	0.00	0.00	70.84	4.03
4	1	3.00	0.00	0.00	63.47	4.46
5	1	3.00	0.00	0.00	56.01	4.89
6	1	3.00	0.00	0.00	48.54	5.23
7	1	13.00	0.00	0.00	41.08	5.66
8	1	148.00	0.00	0.00	33.62	6.09
9	1	891.00	0.00	0.00	26.24	6.52
10	1	1273.00	0.00	0.00	18.78	6.95
11	1	2099.00	0.00	0.00	16.55	7.03
12	1	6581.00	0.00	0.00	15.01	7.12
13	1	8701.00	0.00	0.00	13.55	7.20

Environmental Crack Growth Check for Sustained Stresses
(Kmax less than Keac): NOT SET

F-F Pin With Only Warm Landing
MODEL: SC07

ANALYSIS RESULTS:

Schedl	Blk Step	Cycles	Flaw Size a	Flaw Size c	K max a-tip
1	1	19720.	0.1104	0.1282	30.417
1	2	39440.	0.1109	0.1288	30.475
1	3	59160.	0.1113	0.1294	30.533
1	4	78880.	0.1117	0.1300	30.592
1	5	98600.	0.1122	0.1306	30.651
1	6	118320.	0.1126	0.1312	30.711
1	7	138040.	0.1131	0.1318	30.771
1	8	157760.	0.1135	0.1324	30.832
1	9	177480.	0.1140	0.1330	30.893
1	10	197200.	0.1145	0.1336	30.955
1	11	216920.	0.1149	0.1343	31.017
1	12	236640.	0.1154	0.1349	31.079

FINAL RESULTS:
Critical Crack Size has NOT been reached.

at Cycle No. 8701.00
of Load Step No. 13 Description: None
of Block No. 12
of Schedule No. 1
Crack Size a = 0.115387
Total Cycles = 236640.00

t - indicates this step or a step in this block was below threshold
Corresponding semi crack length, c = 0.134894

Prepared By	Name/Date Saike Wang 4/12/02	LOCKHEED MARTIN	Page/Section No. 1	File Name Cryopin_gg
Checked By	4/12/02	Science, Engineering, Analysis, & Test Mechanical Systems Analysis Department.	Drawing No.	SCD0678
Title	AMS-02 Magnet strap Clevis Pin (Cryo) Section G-G.			

SC07

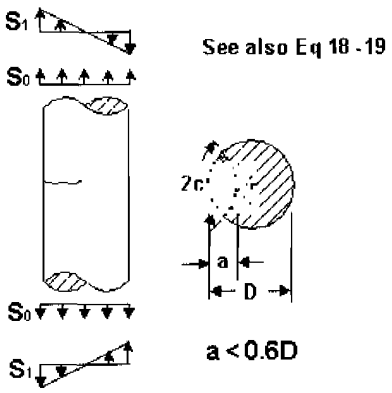

Material: AISI 316LN (-452F)
NASA/FLAGRO Crack case type: SC07

Section Properties:

Pin diameter D = 0.748 in.

Crack Properties:

a = 0.06837 in.(dye penetrant)

Stress:

Axial Stress S0 = 0.0 ksi
Bending stress S3 = 85.452 ksi (ref. Sectgg_clevis, pg.11)

Prepared By	Name/Date Saike Wang 4/12/02	LOCKHEED MARTIN	Page/Section No. 2	File Name Cryopin_gg
Checked By	4/12/02	Science, Engineering, Analysis, & Test Mechanical Systems Analysis Department.	Drawing No.	SCD0678
Title	AMS-02 Magnet Clevis Pin (Cryo) Section G-G			

This clevis attaches the C1W1 carbon HS strap with a 19 mm diameter pin. (Ref drawing SCD0678, issue 07, section G-G)
This clevis is at cryogenic temperature (-452F) for Truck transportation, Air transportation, On - Orbit condition and Launch/Landing conditions. The Flagro analysis uses the truck, Air, On-Orbit and Launch/Landing case spectrums at cryo temp.
The material data used is from code F3KA13LA2 from the NASGRO library, except that the UTS and YS are changed as per the material property for the 316LN Hiproof material as per OIE205 Rev.d , page 25.

The truck, air, on orbit spectrums are run for 1 mission with a scatter factor of 4 and the Launch/Landing spectrum is run for 3 missions with a scatter factor of 4. Dye penetrant inspection is used to inspect the pin, and the standard dye penetrant crack size c = 0.075 in. is used. (Ref. JSC22267A, table 2).

FATIGUE CRACK GROWTH ANALYSIS

DATE: 04/05/02 TIME: 14:30:23
(computed: NASGRO Version 3.0.4, Jan 2000.)
U.S. customary units [inches, ksi, ksi sqrt(in)]

PROBLEM TITLE

Sect GG pin Cold Launch and Landing for AMS-02 Magnet straps Ref. Drg. SCD0678, issue 07)

Crack Growth Model: Non Interaction
Equation/Table : NASGRO Equation

GEOMETRY

MODEL: SC07-Part-circular Surf. crk on cylinder circ. plane.

Cylinder Diameter, D = 0.7480

FLAW SIZE (Standard NASA JSC NDE):
Method of Inspection: Dye Penetrant

a (init.) = 0.6837E-01

MATERIAL

MATL 1: Edited file data ~2211
~2221

Material Header Info.:

Material 1 Data ID: F3KA13LA2
Alloy Description : AISI 316/316L ~2611

Alloy Cond/HT : Ann sht & plt ; -452F LHe
~2621
Product Form : ~2631

Environment : ~2641

Specimen Type :
Specimen Orientation :
Specimen Thickness :
Specimen Width :
Specimen Test Frequency :
Data Reference :

Material Properties:

Matl: No.	UTS	YS	K1e	K1c	Ak	Bk	Thk	Kc	Keac
1	**203.1**	**162.5**	280.0	200.0				200.0	

Matl: No.	Crack Growth Eqn Constants C	n	p	q	DKo	Cth+	Cth-	Rcl	Alpha	Smax/SIGo

1	0.220D-09	3.200	0.25	0.25	8.00	1.50	0.10	0.70	2.50	0.30

(Ref. OIE205, Rev. D, page 25 for UTS and YS of 316L stainless steel)

Sect GG pin
MODEL: SC07

FATIGUE SCHEDULE BLOCK INPUT TABLE

Four Blocks with VCMAGNET all cold ~

[Note: Stress = Input Value * Scale Factor]

Stress Scaling Factors for Block Case: **1** **(TRUCK3-VCMAGNET)**

Scale Factor for Stress S0: 0.0000
Scale Factor for Stress S1: 0.85452 **(Ref. Sectgg-clevis, page 11)**

Stress Scaling Factors for Block Case: **2** **(AIR3-VCMAGNET)**

Scale Factor for Stress S0: 0.0000
Scale Factor for Stress S1: 0.85452

Stress Scaling Factors for Block Case: **3** **(ONORBIT2-VCMAGNET)**

Scale Factor for Stress S0: 0.0000
Scale Factor for Stress S1: 0.85452

Stress Scaling Factors for Block Case: **4** **(GSFC-MAGNET)**

Scale Factor for Stress S0: 0.0000
Scale Factor for Stress S1: 0.85452

Schedule info. was input manually

Total No. of Blocks in Schedule = 24

Block Number and Case Correspondences

Block Number From	-	To	Block Case No.
1	-	4	1
5	-	8	2
9	-	12	3
13	-	24	4

Stresses: Tension, bending or pin

Sect GG pin
MODEL: SC07

FATIGUE SCHEDULE BLOCK INPUT TABLE

Four Blocks with VCMAGNET all cold ~

BLOCK CASE NO. 1

	S T E P	M: A: T: L:	NUMBER OF FATIGUE CYCLES	S0 (t1)	S0 (t2)	S1 (t1)	S1 (t2)
1:	1:		1757.00	36.70:	5.60:	36.70:	5.60:

2:	1:	2148.00 :	30.10:	6.40:	30.10:	6.40:
3:	1:	13668.00 :	25.50:	6.90:	25.50:	6.90:
4:	1:	38857.00 :	21.90:	7.30:	21.90:	7.30:
5:	1:	110517.00 :	19.50:	7.50:	19.50:	7.50:
6:	1:	150546.00 :	17.80:	7.70:	17.80:	7.70:
7:	1:	195456.00 :	16.50:	7.90:	16.50:	7.90:
8:	1:	1440631.00 :	15.90:	7.90:	15.90:	7.90:

Environmental Crack Growth Check for Sustained Stresses
(Kmax less than Keac): NOT SET

BLOCK CASE NO. 2

S T E P	M: A: T: L:	NUMBER OF FATIGUE CYCLES	S0 (t1)	S0 (t2)	S1 (t1)	S1 (t2)
1:	1:	17832.00 :	43.10:	4.90:	43.10:	4.90:
2:	1:	594.00 :	43.10:	4.90:	43.10:	4.90:
3:	1:	695448.00 :	22.60:	7.20:	22.60:	7.20:
4:	1:	30.00 :	43.10:	4.90:	43.10:	4.90:
5:	1:	17832.00 :	43.10:	4.90:	43.10:	4.90:

Environmental Crack Growth Check for Sustained Stresses
(Kmax less than Keac): NOT SET

BLOCK CASE NO. 3

S T E P	M: A: T: L:	NUMBER OF FATIGUE CYCLES	S0 (t1)	S0 (t2)	S1 (t1)	S1 (t2)
1:	1:	34.00 :	14.10:	8.50:	14.10:	8.50:
2:	1:	34.00 :	13.90:	8.50:	13.90:	8.50:
3:	1:	60.00 :	13.70:	8.50:	13.70:	8.50:
4:	1:	179.00 :	13.50:	8.50:	13.50:	8.50:
5:	1:	117.00 :	14.10:	8.50:	14.10:	8.50:
6:	1:	414.00 :	13.90:	8.50:	13.90:	8.50:
7:	1:	2404.00 :	13.70:	8.50:	13.70:	8.50:
8:	1:	9789.00 :	13.50:	8.50:	13.50:	8.50:
9:	1:	62675.00 :	13.40:	8.50:	13.40:	8.50:

Environmental Crack Growth Check for Sustained Stresses
(Kmax less than Keac): NOT SET

BLOCK CASE NO. 4

S T E P	M: A: T: L:	NUMBER OF FATIGUE CYCLES	S0 (t1)	S0 (t2)	S1 (t1)	S1 (t2)
1:	1:	2.00 :	96.10:	3.90:	96.10:	3.90:
2:	1:	4.00 :	88.10:	4.30:	88.10:	4.30:
3:	1:	8.00 :	80.00:	4.80:	80.00:	4.80:
4:	1:	15.00 :	72.00:	5.20:	72.00:	5.20:
5:	1:	49.00 :	64.00:	5.60:	64.00:	5.60:
6:	1:	81.00 :	55.90:	6.00:	55.90:	6.00:
7:	1:	178.00 :	47.90:	6.40:	47.90:	6.40:

8:	1:	641.00 :	39.90:	6.80:	39.90:	6.80:
9:	1:	3120.00 :	31.90:	7.20:	31.90:	7.20:
10:	1:	3405.00 :	23.80:	7.60:	23.80:	7.60:
11:	1:	5019.00 :	21.40:	7.80:	21.40:	7.80:
12:	1:	28853.00 :	19.80:	7.80:	19.80:	7.80:
13:	1:	91655.00 :	18.20:	7.90:	18.20:	7.90:

Environmental Crack Growth Check for Sustained Stresses
(Kmax less than Keac): NOT SET

Sect GG pin
MODEL: SC07

FATIGUE SCHEDULE BLOCK STRESS TABLE

Four Blocks with VCMAGNET all cold

STEP	MA: TL:	NUMBER OF FATIGUE CYCLES	S0 (ksi) (t1)	S0 (ksi) (t2)	S1 (ksi) (t1)	S1 (ksi) (t2)
1:	1:	1757.00 :	0.00:	0.00:	31.36:	4.79:
2:	1:	2148.00 :	0.00:	0.00:	25.72:	5.47:
3:	1:	13668.00 :	0.00:	0.00:	21.79:	5.90:
4:	1:	38857.00 :	0.00:	0.00:	18.71:	6.24:
5:	1:	110517.00 :	0.00:	0.00:	16.66:	6.41:
6:	1:	150546.00 :	0.00:	0.00:	15.21:	6.58:
7:	1:	195456.00 :	0.00:	0.00:	14.10:	6.75:
8:	1:	1440631.00 :	0.00:	0.00:	13.59:	6.75:

Environmental Crack Growth Check for Sustained Stresses
(Kmax less than Keac): NOT SET

Sect GG pin
MODEL: SC07

FATIGUE SCHEDULE BLOCK STRESS TABLE

Four Blocks with VCMAGNET all cold

STEP	MA: TL:	NUMBER OF FATIGUE CYCLES	S0 (ksi) (t1)	S0 (ksi) (t2)	S1 (ksi) (t1)	S1 (ksi) (t2)
1:	1:	17832.00 :	0.00:	0.00:	36.83:	4.19:
2:	1:	594.00 :	0.00:	0.00:	36.83:	4.19:
3:	1:	695448.00 :	0.00:	0.00:	19.31:	6.15:
4:	1:	30.00 :	0.00:	0.00:	36.83:	4.19:
5:	1:	17832.00 :	0.00:	0.00:	36.83:	4.19:

Environmental Crack Growth Check for Sustained Stresses
(Kmax less than Keac): NOT SET

Sect GG pin
MODEL: SC07

FATIGUE SCHEDULE BLOCK STRESS TABLE

Four Blocks with VCMAGNET all cold

STEP	MA: TL:	NUMBER OF	S0	S1

E P	T: L:	FATIGUE CYCLES	(ksi) (t1)	(t2)	(ksi) (t1)	(t2)
1:	1:	34.00	0.00:	0.00:	12.05:	7.26:
2:	1:	34.00	0.00:	0.00:	11.88:	7.26:
3:	1:	60.00	0.00:	0.00:	11.71:	7.26:
4:	1:	179.00	0.00:	0.00:	11.54:	7.26:
5:	1:	117.00	0.00:	0.00:	12.05:	7.26:
6:	1:	414.00	0.00:	0.00:	11.88:	7.26:
7:	1:	2404.00	0.00:	0.00:	11.71:	7.26:
8:	1:	9789.00	0.00:	0.00:	11.54:	7.26:
9:	1:	62675.00	0.00:	0.00:	11.45:	7.26:

Environmental Crack Growth Check for Sustained Stresses
(Kmax less than Keac): NOT SET

Sect GG pin
MODEL: SC07

FATIGUE SCHEDULE BLOCK STRESS TABLE

Four Blocks with VCMAGNET all cold

S T E P	M: A: T: L:	NUMBER OF FATIGUE CYCLES	S0 (ksi) (t1)	(t2)	S1 (ksi) (t1)	(t2)
1:	1:	2.00	0.00:	0.00:	82.12:	3.33:
2:	1:	4.00	0.00:	0.00:	75.28:	3.67:
3:	1:	8.00	0.00:	0.00:	68.36:	4.10:
4:	1:	15.00	0.00:	0.00:	61.53:	4.44:
5:	1:	49.00	0.00:	0.00:	54.69:	4.79:
6:	1:	81.00	0.00:	0.00:	47.77:	5.13:
7:	1:	178.00	0.00:	0.00:	40.93:	5.47:
8:	1:	641.00	0.00:	0.00:	34.10:	5.81:
9:	1:	3120.00	0.00:	0.00:	27.26:	6.15:
10:	1:	3405.00	0.00:	0.00:	20.34:	6.49:
11:	1:	5019.00	0.00:	0.00:	18.29:	6.67:
12:	1:	28853.00	0.00:	0.00:	16.92:	6.67:
13:	1:	91655.00	0.00:	0.00:	15.55:	6.75:

Environmental Crack Growth Check for Sustained Stresses
(Kmax less than Keac): NOT SET

Sect GG pin
MODEL: SC07

ANALYSIS RESULTS:

Schedl	Blk Step	Cycles	Flaw Size a	c	K max a-tip
1	1	1953580.	0.0684	0.0751	8.903 t
1	2	3907160.	0.0685	0.0752	8.908 t
1	3	5860740.	0.0686	0.0753	8.912 t
1	4	7814320.	0.0687	0.0753	8.916 t
1	5	8546056.	0.0722	0.0796	10.699
1	6	9277792.	0.0760	0.0843	10.978
1	7	10009528.	0.0803	0.0895	11.251
1	8	10741264.	0.0849	0.0953	11.544
1	9	10816970.	0.0849	0.0953	3.778 t

1	10	10892676.	0.0849	0.0953	3.778 t
1	11	10968382.	0.0849	0.0953	3.778 t
1	12	11044088.	0.0849	0.0953	3.778 t
1	13	11177118.	0.0852	0.0956	25.748 t
1	14	11310148.	0.0854	0.0959	25.785 t
1	15	11443178.	0.0857	0.0963	25.823 t
1	16	11576208.	0.0860	0.0966	25.860 t
1	17	11709238.	0.0863	0.0970	25.898 t
1	18	11842268.	0.0865	0.0973	25.936 t
1	19	11975298.	0.0868	0.0976	25.974 t
1	20	12108328.	0.0871	0.0980	26.012 t
1	21	12241358.	0.0874	0.0983	26.051 t
1	22	12374388.	0.0876	0.0987	26.090 t
1	23	12507418.	0.0879	0.0990	26.129 t
1	24	12640448.	0.0882	0.0994	26.169 t

FINAL RESULTS:
Critical Crack Size has NOT been reached.

at Cycle No. 91655.00
of Load Step No. 13 Description: None
of Block No. 24
of Schedule No. 1
Crack Size a = 0.882058E-01
Total Cycles = 12640448.

t - indicates this step or a step in this block was below threshold
Corresponding semi crack length, c = 0.994083E-01

Prepared By	Name/Date Saike wang 4/12/02	LOCKHEED MARTIN	Page/Section No. 1	File Name Coldpin_gg
Checked By	4/12/02	Science, Engineering, Analysis, & Test Mechanical Systems Analysis Department.	Drawing No.	
Title	AMS-02 Magnet strap Clevis (Cold) Section G-G.			

SC07

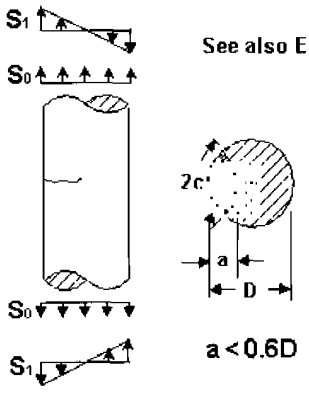

Material: AISI 316LN (-452F)
NASA/FLAGRO Crack case type: SC07

Section Properties:

Pin diameter D = 0.748 in.

Crack Properties:

a = 0.06837 in.(dye penetrant)

Stress:

Axial Stress S0 = 0.0 ksi
Bending stress S3 = 85.452 ksi (ref. sectgg_clevis, pg.11)

Prepared By	Name/Date Saike Wang 4/12/02	LOCKHEED MARTIN	Page/Section No. 2	File Name Coldpin_gg
Checked By	4/12/02	Science, Engineering, Analysis, & Test Mechanical Systems Analysis Department.	Drawing No.	
Title	AMS-02 Magnet strap Clevis Pin (Cold) section G-G			

This clevis attaches the C1W1 carbon HS strap with a 19 mm diameter pin. (Ref drawing SCD0678, issue 07, section G-G)
This pin is at cryogenic temperature (-452F) for Truck transportation, Air transportation, Launch and On - Orbit conditions. The Flagro analysis uses the truck, Air, On-Orbit and Launch case spectrums at cryo temp.
The material data used is from code F3KA13LA2 from the NASGRO library, except that the UTS and YS are changed as per the material property for the 316LN Hiproof material as per OIE205 Rev.d , page 25.

The truck, air, and on orbit spectrums are run for 1 mission with a scatter factor of 4 and the Launch spectrum is run for 3 missions with a scatter factor of 4. The final crack from this run is used as the initial crack size for the analysis for the warm landing case.

Dye penetrant inspection is used to inspect the pin and the standard dye penetrant crack size c = 0.075 in. is used (Ref. JSC22267A, table 2)

FATIGUE CRACK GROWTH ANALYSIS

DATE: 04/05/02 TIME: 15:02:43
(computed: NASGRO Version 3.0.4, Jan 2000.)
U.S. customary units [inches, ksi, ksi sqrt(in)]

PROBLEM TITLE

GG pin Cold Launch for AMS-02 Magnet straps
(Ref. Drg. SCD0678, issue 07)

Crack Growth Model: Non Interaction
Equation/Table : NASGRO Equation

GEOMETRY

MODEL: SC07-Part-circular Surf. crk on cylinder circ. plane.

Cylinder Diameter, D = 0.7480

FLAW SIZE (Standard NASA JSC NDE):
Method of Inspection: Dye Penetrant

a (init.) = 0.6837E-01

MATERIAL

MATL 1: Edited file data ~2211
~2221

Material Header Info.:

Material 1 Data ID: F3KA13LA2
Alloy Description : AISI 316/316L ~2611

Alloy Cond/HT : Ann sht & plt ; -452F LHe
~2621
Product Form : ~2631

Environment : ~2641

Specimen Type :
Specimen Orientation :
Specimen Thickness :
Specimen Width :
Specimen Test Frequency :
Data Reference :

Material Properties:

Matl: No.	UTS	YS	K1e	K1c	Ak	Bk	Thk	Kc	Keac
1	**203.1**	**162.5**	280.0	200.0				200.0	

Matl: No.	Crack Growth Eqn Constants C	n	p	q	DKo	Cth+	Cth-	Rcl	Alpha	Smax/SIGo

```
:----:---------:-----:----:----:------:------:-----:----:-----:-----:
:  1 :0.220D-09:3.200:0.25:0.25:  8.00:  1.50: 0.10:0.70: 2.50: 0.30:
```

(Ref. OIE205, Rev. D, page 25 for UTS and YS of 316L stainless steel)

GG pin cold launch
MODEL: SC07

FATIGUE SCHEDULE BLOCK INPUT TABLE

Four Blocks with Cold launch ~

[Note: Stress = Input Value * Scale Factor]

Stress Scaling Factors for Block Case: **1** **(TRUCK3-VCMAGNET)**

Scale Factor for Stress S0: 0.0000
Scale Factor for Stress S1: 0.85452 **(Ref. Sectgg-clevis, page 11)**

Stress Scaling Factors for Block Case: **2** **(AIR3-VCMAGNET)**

Scale Factor for Stress S0: 0.0000
Scale Factor for Stress S1: 0.85452

Stress Scaling Factors for Block Case: **3** **(ONORBIT2-VCMAGNET)**

Scale Factor for Stress S0: 0.0000
Scale Factor for Stress S1: 0.85452

Stress Scaling Factors for Block Case: **4** **(LIFTOFF-ONLY)**

Scale Factor for Stress S0: 0.0000
Scale Factor for Stress S1: 0.85452

Schedule info. was input manually

Total No. of Blocks in Schedule = 24

Block Number and Case Correspondences

Block Number From	-	To	Block Case No.
1	-	4	1
5	-	8	2
9	-	12	3
13	-	24	4

Stresses: Tension, bending or pin

GGpin cold launch
MODEL: SC07

FATIGUE SCHEDULE BLOCK INPUT TABLE

Four Blocks with Cold launch ~

BLOCK CASE NO. 1

S T E P	M: A: T: L:	NUMBER OF FATIGUE CYCLES	S0 (t1)	S0 (t2)	S1 (t1)	S1 (t2)
1:	1:	1757.00	36.70:	5.60:	36.70:	5.60:
2:	1:	2148.00	30.10:	6.40:	30.10:	6.40:
3:	1:	13668.00	25.50:	6.90:	25.50:	6.90:
4:	1:	38857.00	21.90:	7.30:	21.90:	7.30:
5:	1:	110517.00	19.50:	7.50:	19.50:	7.50:
6:	1:	150546.00	17.80:	7.70:	17.80:	7.70:
7:	1:	195456.00	16.50:	7.90:	16.50:	7.90:
8:	1:	1440631.00	15.90:	7.90:	15.90:	7.90:

Environmental Crack Growth Check for Sustained Stresses
(Kmax less than Keac): NOT SET

BLOCK CASE NO. 2

S T E P	M: A: T: L:	NUMBER OF FATIGUE CYCLES	S0 (t1)	S0 (t2)	S1 (t1)	S1 (t2)
1:	1:	17832.00	43.10:	4.90:	43.10:	4.90:
2:	1:	594.00	43.10:	4.90:	43.10:	4.90:
3:	1:	695448.00	22.60:	7.20:	22.60:	7.20:
4:	1:	30.00	43.10:	4.90:	43.10:	4.90:
5:	1:	17832.00	43.10:	4.90:	43.10:	4.90:

Environmental Crack Growth Check for Sustained Stresses
(Kmax less than Keac): NOT SET

BLOCK CASE NO. 3

S T E P	M: A: T: L:	NUMBER OF FATIGUE CYCLES	S0 (t1)	S0 (t2)	S1 (t1)	S1 (t2)
1:	1:	34.00	14.10:	8.50:	14.10:	8.50:
2:	1:	34.00	13.90:	8.50:	13.90:	8.50:
3:	1:	60.00	13.70:	8.50:	13.70:	8.50:
4:	1:	179.00	13.50:	8.50:	13.50:	8.50:
5:	1:	117.00	14.10:	8.50:	14.10:	8.50:
6:	1:	414.00	13.90:	8.50:	13.90:	8.50:
7:	1:	2404.00	13.70:	8.50:	13.70:	8.50:
8:	1:	9789.00	13.50:	8.50:	13.50:	8.50:
9:	1:	62675.00	13.40:	8.50:	13.40:	8.50:

Environmental Crack Growth Check for Sustained Stresses
(Kmax less than Keac): NOT SET

BLOCK CASE NO. 4

S T E P	M: A: T: L:	NUMBER OF FATIGUE CYCLES	S0 (t1)	S0 (t2)	S1 (t1)	S1 (t2)

1:	1:	1.00 :	96.10:	3.90:	96.10:	3.90:
2:	1:	3.00 :	88.10:	4.30:	88.10:	4.30:
3:	1:	5.00 :	80.00:	4.80:	80.00:	4.80:
4:	1:	12.00 :	72.00:	5.20:	72.00:	5.20:
5:	1:	46.00 :	64.00:	5.60:	64.00:	5.60:
6:	1:	78.00 :	55.90:	6.00:	55.90:	6.00:
7:	1:	165.00 :	47.90:	6.40:	47.90:	6.40:
8:	1:	493.00 :	39.90:	6.80:	39.90:	6.80:
9:	1:	2229.00 :	31.90:	7.20:	31.90:	7.20:
10:	1:	2132.00 :	23.80:	7.60:	23.80:	7.60:
11:	1:	2920.00 :	21.40:	7.80:	21.40:	7.80:
12:	1:	22272.00 :	19.80:	7.80:	19.80:	7.80:
13:	1:	82954.00 :	18.20:	7.90:	18.20:	7.90:

Environmental Crack Growth Check for Sustained Stresses
(Kmax less than Keac): NOT SET

GGpin cold launch
MODEL: SC07

FATIGUE SCHEDULE BLOCK STRESS TABLE

Four Blocks with Cold launch

S T E P	M: A: T: L:	NUMBER OF FATIGUE CYCLES	S0 (ksi) (t1)	S0 (ksi) (t2)	S1 (ksi) (t1)	S1 (ksi) (t2)
1:	1:	1757.00 :	0.00:	0.00:	31.36:	4.79:
2:	1:	2148.00 :	0.00:	0.00:	25.72:	5.47:
3:	1:	13668.00 :	0.00:	0.00:	21.79:	5.90:
4:	1:	38857.00 :	0.00:	0.00:	18.71:	6.24:
5:	1:	110517.00 :	0.00:	0.00:	16.66:	6.41:
6:	1:	150546.00 :	0.00:	0.00:	15.21:	6.58:
7:	1:	195456.00 :	0.00:	0.00:	14.10:	6.75:
8:	1:	1440631.00 :	0.00:	0.00:	13.59:	6.75:

Environmental Crack Growth Check for Sustained Stresses
(Kmax less than Keac): NOT SET

GGpin cold launch
MODEL: SC07

FATIGUE SCHEDULE BLOCK STRESS TABLE

Four Blocks with Cold launch

S T E P	M: A: T: L:	NUMBER OF FATIGUE CYCLES	S0 (ksi) (t1)	S0 (ksi) (t2)	S1 (ksi) (t1)	S1 (ksi) (t2)
1:	1:	17832.00 :	0.00:	0.00:	36.83:	4.19:
2:	1:	594.00 :	0.00:	0.00:	36.83:	4.19:
3:	1:	695448.00 :	0.00:	0.00:	19.31:	6.15:
4:	1:	30.00 :	0.00:	0.00:	36.83:	4.19:
5:	1:	17832.00 :	0.00:	0.00:	36.83:	4.19:

Environmental Crack Growth Check for Sustained Stresses
(Kmax less than Keac): NOT SET

GGpin cold launch

MODEL: SC07

FATIGUE SCHEDULE BLOCK STRESS TABLE

Four Blocks with Cold launch

STEP	MAT	NUMBER OF FATIGUE CYCLES	S0 (ksi) (t1)	S0 (ksi) (t2)	S1 (ksi) (t1)	S1 (ksi) (t2)
1	1	34.00	0.00	0.00	12.05	7.26
2	1	34.00	0.00	0.00	11.88	7.26
3	1	60.00	0.00	0.00	11.71	7.26
4	1	179.00	0.00	0.00	11.54	7.26
5	1	117.00	0.00	0.00	12.05	7.26
6	1	414.00	0.00	0.00	11.88	7.26
7	1	2404.00	0.00	0.00	11.71	7.26
8	1	9789.00	0.00	0.00	11.54	7.26
9	1	62675.00	0.00	0.00	11.45	7.26

Environmental Crack Growth Check for Sustained Stresses
(Kmax less than Keac): NOT SET

GGpin cold launch
MODEL: SC07

FATIGUE SCHEDULE BLOCK STRESS TABLE

Four Blocks with Cold launch

STEP	MAT	NUMBER OF FATIGUE CYCLES	S0 (ksi) (t1)	S0 (ksi) (t2)	S1 (ksi) (t1)	S1 (ksi) (t2)
1	1	1.00	0.00	0.00	82.12	3.33
2	1	3.00	0.00	0.00	75.28	3.67
3	1	5.00	0.00	0.00	68.36	4.10
4	1	12.00	0.00	0.00	61.53	4.44
5	1	46.00	0.00	0.00	54.69	4.79
6	1	78.00	0.00	0.00	47.77	5.13
7	1	165.00	0.00	0.00	40.93	5.47
8	1	493.00	0.00	0.00	34.10	5.81
9	1	2229.00	0.00	0.00	27.26	6.15
10	1	2132.00	0.00	0.00	20.34	6.49
11	1	2920.00	0.00	0.00	18.29	6.67
12	1	22272.00	0.00	0.00	16.92	6.67
13	1	82954.00	0.00	0.00	15.55	6.75

Environmental Crack Growth Check for Sustained Stresses
(Kmax less than Keac): NOT SET

GGpin cold launch
MODEL: SC07

ANALYSIS RESULTS:

Schedl	Blk Step	Cycles	Flaw Size a	Flaw Size c	K max a-tip
1	1	1953580.	0.0684	0.0751	8.903 t

1	2	3907160.	0.0685	0.0752	8.908	t
1	3	5860740.	0.0686	0.0753	8.912	t
1	4	7814320.	0.0687	0.0753	8.916	t
1	5	8546056.	0.0722	0.0796	10.699	
1	6	9277792.	0.0760	0.0843	10.978	
1	7	10009528.	0.0803	0.0895	11.251	
1	8	10741264.	0.0849	0.0953	11.544	
1	9	10816970.	0.0849	0.0953	3.778	t
1	10	10892676.	0.0849	0.0953	3.778	t
1	11	10968382.	0.0849	0.0953	3.778	t
1	12	11044088.	0.0849	0.0953	3.778	t
1	13	11157398.	0.0851	0.0955	25.747	t
1	14	11270708.	0.0853	0.0958	25.777	t
1	15	11384018.	0.0856	0.0961	25.807	t
1	16	11497328.	0.0858	0.0963	25.837	t
1	17	11610638.	0.0860	0.0966	25.867	t
1	18	11723948.	0.0862	0.0969	25.898	t
1	19	11837258.	0.0864	0.0972	25.928	t
1	20	11950568.	0.0866	0.0974	25.959	t
1	21	12063878.	0.0869	0.0977	25.989	t
1	22	12177188.	0.0871	0.0980	26.020	t
1	23	12290498.	0.0873	0.0983	26.051	t
1	24	12403808.	0.0875	0.0986	26.083	t

FINAL RESULTS:
Critical Crack Size has NOT been reached.

at Cycle No. 82954.00
of Load Step No. 13 Description: None
of Block No. 24
of Schedule No. 1
Crack Size a = 0.875339E-01
Total Cycles = 12403808.

t - indicates this step or a step in this block was below threshold
Corresponding semi crack length, c = 0.985607E-01

Prepared By	Name/Date Saike Wang 4/12/02	LOCKHEED MARTIN	Page/Section No. 1	File Name Warmpin_gg
Checked By	4/12/02	Science, Engineering, Analysis, & Test Mechanical Systems Analysis Department.	Drawing No.	SCD0678
Title	AMS-02 Magnet strap Clevis Pin (Warm) Section G-G.			

SC07

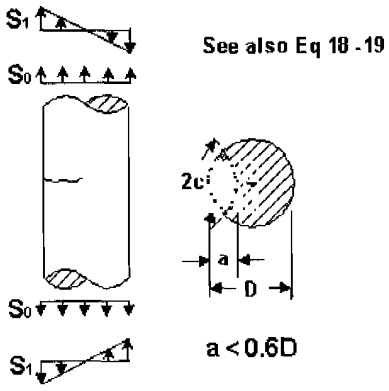

Material: AISI 316LN (75F)
NASA/FLAGRO Crack case type: SC07

Section Properties:

Pin diameter D = 0.748 in.

Crack Properties:

a = 0.0875 in. (Final crack size from GG-pin-cold-launch, page 6)

Stress:

Axial Stress S0 = 0.0 ksi
Bending stress S3 = 73.863 ksi (Ref. Sectgg_clevis, pg.11)

Prepared By	Name/Date Saike Wang 4/12/02	LOCKHEED MARTIN	Page/Section No. 2	File Name Warmpin_gg
Checked By	4/12/02	Science, Engineering, Analysis, & Test Mechanical Systems Analysis Department.	Drawing No.	SCD0678
Title	AMS-02 Magnet Clevis Pin (warm) Section G-G			

This clevis attaches the C1W1 carbon HS strap with a 19 mm diameter pin. (Ref drawing SCD0678, issue 07, section G-G)
This clevis is at room temperature (75F) for Landing conditions. The Flagro analysis uses the Landing case spectrums at room temp.
The material data used is from code F3KA13AB1 from the NASGRO library, except that the UTS and YS are changed as per the material property for the 316LN Hiproof material as per OIE205 Rev.d , page 25.

Landing spectrum is run for 3 missions with a scatter factor of 4. The final crack size fro the cold launch case is used as the initial crack size for this analysis.(Ref. GG-pin-cold-launch, page 6)

FATIGUE CRACK GROWTH ANALYSIS

DATE: 04/05/02 TIME: 15:22:34
(computed: NASGRO Version 3.0.4, Jan 2000.)
U.S. customary units [inches, ksi, ksi sqrt(in)]

PROBLEM TITLE

GG pin warm landing for AMS-02 Magnet Straps
(Ref. Drg SCD0678, issue 07)

Crack Growth Model: Non Interaction
Equation/Table : NASGRO Equation

GEOMETRY

MODEL: SC07-Part-circular Surf. crk on cylinder circ. plane.

Cylinder Diameter, D = 0.7480

FLAW SIZE: (User specified)

a (init.) = 0.8750E-01 **(Ref. Final crack size from GG-pin-cold-launch, page 6)**

MATERIAL

MATL 1: Edited file data ~2211
~2221

Material Header Info.:

Material 1 Data ID: F3KA13AB1
Alloy Description : AISI 316/316L ~2611

Alloy Cond/HT : Ann sht & plt ~262
1
Product Form : ~2631

Environment : ~2641

Specimen Type :
Specimen Orientation :
Specimen Thickness :
Specimen Width :
Specimen Test Frequency :
Data Reference :

Material Properties:

Matl No.	UTS	YS	K1e	K1c	Ak	Bk	Thk	Kc	Keac
1	**127.6**	**108.1**	280.0	200.0				200.0	

Matl No.	Crack Growth Eqn Constants C	n	p	q	DKo	Cth+	Cth-	Rcl	Alpha	Smax/SIGo
1	0.220D-09	3.200	0.25	0.25	3.50	1.50	0.10	0.70	2.50	0.30

(Ref. OIE205, Rev. D, page 25 for UTS and YS of 316L stainless steel)

GG pin warm landing
MODEL: SC07

FATIGUE SCHEDULE BLOCK INPUT TABLE

Warm landing

[Note: Stress = Input Value * Scale Factor]

Stress Scaling Factors for Block Case: **1** **(LAND-ONLY)**

Scale Factor for Stress S0: 0.0000
Scale Factor for Stress S1: 0.73863 **(Ref. Sectgg_clevis, page 11)**

Schedule info. was input manually

Total No. of Blocks in Schedule = 12

Block Number and Case Correspondences

Block Number From - To	Block Case No.
1 - 12	1

Stresses: Tension, bending or pin

GG pin warm landing
MODEL: SC07

FATIGUE SCHEDULE BLOCK INPUT TABLE

Warm landing

SINGLE DISTINCT BLOCK

STEP	MAT	NUMBER OF FATIGUE CYCLES	S0 (t1)	S0 (t2)	S1 (t1)	S1 (t2)
1	1	1.00	100.00	3.70	100.00	3.70
2	1	1.00	91.30	4.20	91.30	4.20
3	1	3.00	82.60	4.70	82.60	4.70
4	1	3.00	74.00	5.20	74.00	5.20
5	1	3.00	65.30	5.70	65.30	5.70
6	1	3.00	56.60	6.10	56.60	6.10
7	1	13.00	47.90	6.60	47.90	6.60
8	1	148.00	39.20	7.10	39.20	7.10
9	1	891.00	30.60	7.60	30.60	7.60
10	1	1273.00	21.90	8.10	21.90	8.10
11	1	2099.00	19.30	8.20	19.30	8.20
12	1	6581.00	17.50	8.30	17.50	8.30
13	1	8701.00	15.80	8.40	15.80	8.40

Environmental Crack Growth Check for Sustained Stresses
(Kmax less than Keac): NOT SET

GG pin warm landing
MODEL: SC07

FATIGUE SCHEDULE BLOCK STRESS TABLE

Warm landing

STEP	MAT	NUMBER OF FATIGUE CYCLES	S0 (ksi) (t1)	S0 (ksi) (t2)	S1 (ksi) (t1)	S1 (ksi) (t2)
1	1	1.00	0.00	0.00	73.86	2.73
2	1	1.00	0.00	0.00	67.44	3.10
3	1	3.00	0.00	0.00	61.01	3.47
4	1	3.00	0.00	0.00	54.66	3.84
5	1	3.00	0.00	0.00	48.23	4.21
6	1	3.00	0.00	0.00	41.81	4.51
7	1	13.00	0.00	0.00	35.38	4.87
8	1	148.00	0.00	0.00	28.95	5.24
9	1	891.00	0.00	0.00	22.60	5.61
10	1	1273.00	0.00	0.00	16.18	5.98
11	1	2099.00	0.00	0.00	14.26	6.06
12	1	6581.00	0.00	0.00	12.93	6.13
13	1	8701.00	0.00	0.00	11.67	6.20

Environmental Crack Growth Check for Sustained Stresses
(Kmax less than Keac): NOT SET

GG pin warm landing
MODEL: SC07

ANALYSIS RESULTS:

Schedl	Blk Step	Cycles	Flaw Size a	Flaw Size c	K max a-tip
1	1	19720.	0.0876	0.0986	23.484 t
1	2	39440.	0.0876	0.0987	23.491 t
1	3	59160.	0.0877	0.0987	23.498 t
1	4	78880.	0.0877	0.0988	23.505 t
1	5	98600.	0.0878	0.0989	23.513 t
1	6	118320.	0.0878	0.0989	23.520 t
1	7	138040.	0.0879	0.0990	23.527 t
1	8	157760.	0.0880	0.0991	23.534 t
1	9	177480.	0.0880	0.0992	23.541 t
1	10	197200.	0.0881	0.0992	23.548 t
1	11	216920.	0.0881	0.0993	23.556 t
1	12	236640.	0.0882	0.0994	23.563 t

FINAL RESULTS:
Critical Crack Size has NOT been reached.

at Cycle No. 8701.00
of Load Step No. 13 Description: None
of Block No. 12
of Schedule No. 1
Crack Size a = 0.881845E-01
Total Cycles = 236640.00

t - indicates this step or a step in this block was below threshold
Corresponding semi crack length, c = 0.993814E-01

Prepared By	Name/Date Saike Wang 4/15/02	LOCKHEED MARTIN Science, Engineering, Analysis, & Test Mechanical Systems Analysis Department.	Page/Section No. 1	File Name Cryopin_hh
Checked By	4/15/02		Drawing No.	SCD0678
Title	AMS-02 Magnet strap Clevis Pin (Cryo) Section H-H.			

SC07

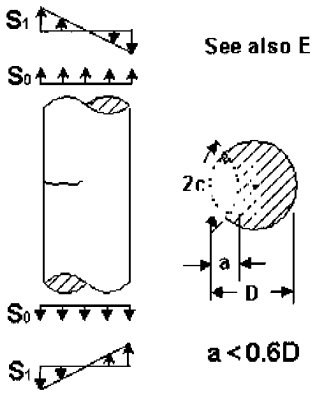

Material: AISI 316LN (-452F)
NASA/FLAGRO Crack case type: SC07

Section Properties:

Pin diameter D = 0.7087 in.

Crack Properties:

a = 0.06805 in.(dye penetrant)

Stress:

Axial Stress S0 = 0.0 ksi
Bending stress S3 = 106.014 ksi (ref. Secthh_clevis, pg.12)

Prepared By	Name/Date Saike Wang 4/15/02	LOCKHEED MARTIN	Page/Section No. 2	File Name Cryopin_hh
Checked By	4/15/02	Science, Engineering, Analysis, & Test Mechanical Systems Analysis Department.	Drawing No.	SCD0678
Title	AMS-02 Magnet Clevis Pin (Cryo) Section H-H			

This clevis attaches the C1W1 FGR3 strap with a 18 mm diameter pin. (Ref drawing SCD0678. issue 07, section H-H)
This clevis is at cryogenic temperature (-452F) for Truck transportation, Air transportation, On - Orbit condition and Launch/Landing conditions. The Flagro analysis uses the truck, Air, On-Orbit and Launch/Landing case spectrums at cryo temp.
The material data used is from code F3KA13LA2 from the NASGRO library, except that the UTS and YS are changed as per the material property for the 316LN Hiproof material as per OIE205 Rev.d , page 25.

The truck, air, on orbit spectrums are run for 1 mission with a scatter factor of 4 and the Launch/Landing spectrum is run for 3 missions with a scatter factor of 4. Dye penetrant inspection is used to inspect the pin, and the standard dye penetrant crack size c = 0.075 in. is used. (Ref. JSC22267A, table 2).

FATIGUE CRACK GROWTH ANALYSIS

DATE: 04/08/02 TIME: 09:36:21
(computed: NASGRO Version 3.0.4, Jan 2000.)
U.S. customary units [inches, ksi, ksi sqrt(in)]

PROBLEM TITLE

HH Pin Cold launch and Landing for AMS-02 Magnet straps
(Ref. Drg. SCD0678, issue 07)

Crack Growth Model: Non Interaction
Equation/Table : NASGRO Equation

GEOMETRY

MODEL: SC07-Part-circular Surf. crk on cylinder circ. plane.

Cylinder Diameter, D = 0.7087

FLAW SIZE (Standard NASA JSC NDE):
Method of Inspection: Dye Penetrant

a (init.) = 0.6805E-01

MATERIAL

MATL 1: Edited file data ~2211
~2221

Material Header Info.:

Material 1 Data ID: F3KA13LA2
Alloy Description : AISI 316/316L ~2611

Alloy Cond/HT : Ann sht & plt ; -452F LHe
~2621
Product Form : ~2631

Environment : ~2641

Specimen Type :
Specimen Orientation :
Specimen Thickness :
Specimen Width :
Specimen Test Frequency :
Data Reference :

Material Properties:

Matl No.	UTS	YS	K1e	K1c	Ak	Bk	Thk	Kc	Keac
1	**203.1**	**162.5**	280.0	200.0				200.0	

Matl No.	Crack Growth Eqn Constants C	n	p	q	DKo	Cth+	Cth-	Rcl	Alpha	Smax/SIGo

: 1 :0.220D-09:3.200:0.25:0.25: 8.00: 1.50: 0.10:0.70: 2.50: 0.30:

| Ref. OIE205, Rev. D page 25 for UTS and YS of 316L Hi-proof pin)
HH Pin all cold
MODEL: SC07

FATIGUE SCHEDULE BLOCK INPUT TABLE

VCMAGNET all cold ~

[Note: Stress = Input Value * Scale Factor]

Stress Scaling Factors for Block Case: **1** **|TRUCK3-VCMAGNET)**

Scale Factor for Stress S0: 0.0000
Scale Factor for Stress S1: 1.0601 **(Ref, secthh-clevis, page 12)**

Stress Scaling Factors for Block Case: **2** **|AIR3-VCMAGNET)**

Scale Factor for Stress S0: 0.0000
Scale Factor for Stress S1: 1.0601

Stress Scaling Factors for Block Case: **3** **|ONORBIT2-VCMAGNET)**

Scale Factor for Stress S0: 0.0000
Scale Factor for Stress S1: 1.0601

Stress Scaling Factors for Block Case: **4** **|GSFC-VCMAGNET)**

Scale Factor for Stress S0: 0.0000
Scale Factor for Stress S1: 1.0601

Schedule info. was input manually

Total No. of Blocks in Schedule = 24

Block Number and Case Correspondences

Block Number From - To	Block Case No.
1 - 4	1
5 - 8	2
9 - 12	3
13 - 24	4

Stresses: Tension, bending or pin

HH Pin all cold
MODEL: SC07

FATIGUE SCHEDULE BLOCK INPUT TABLE

VCMAGNET all cold ~

BLOCK CASE NO. 1

STEP	MAT	NUMBER OF FATIGUE CYCLES	S0 (t1)	S0 (t2)	S1 (t1)	S1 (t2)
1	1	1757.00	36.70	5.60	36.70	5.60
2	1	2148.00	30.10	6.40	30.10	6.40

3:	1:	13668.00 :	25.50:	6.90:	25.50:	6.90:
4:	1:	38857.00 :	21.90:	7.30:	21.90:	7.30:
5:	1:	110517.00 :	19.50:	7.50:	19.50:	7.50:
6:	1:	150546.00 :	17.80:	7.70:	17.80:	7.70:
7:	1:	195456.00 :	16.50:	7.90:	16.50:	7.90:
8:	1:	1440631.00 :	15.90:	7.90:	15.90:	7.90:

Environmental Crack Growth Check for Sustained Stresses
(Kmax less than Keac): NOT SET

BLOCK CASE NO. 2

S T E P	M: A: T: L:	NUMBER OF FATIGUE CYCLES	S0 (t1)	S0 (t2)	S1 (t1)	S1 (t2)
1:	1:	17832.00 :	43.10:	4.90:	43.10:	4.90:
2:	1:	594.00 :	43.10:	4.90:	43.10:	4.90:
3:	1:	695448.00 :	22.60:	7.20:	22.60:	7.20:
4:	1:	30.00 :	43.10:	4.90:	43.10:	4.90:
5:	1:	17832.00 :	43.10:	4.90:	43.10:	4.90:

Environmental Crack Growth Check for Sustained Stresses
(Kmax less than Keac): NOT SET

BLOCK CASE NO. 3

S T E P	M: A: T: L:	NUMBER OF FATIGUE CYCLES	S0 (t1)	S0 (t2)	S1 (t1)	S1 (t2)
1:	1:	34.00 :	14.10:	8.50:	14.10:	8.50:
2:	1:	34.00 :	13.90:	8.50:	13.90:	8.50:
3:	1:	60.00 :	13.70:	8.50:	13.70:	8.50:
4:	1:	179.00 :	13.50:	8.50:	13.50:	8.50:
5:	1:	117.00 :	14.10:	8.50:	14.10:	8.50:
6:	1:	414.00 :	13.90:	8.50:	13.90:	8.50:
7:	1:	2404.00 :	13.70:	8.50:	13.70:	8.50:
8:	1:	9789.00 :	13.50:	8.50:	13.50:	8.50:
9:	1:	62675.00 :	13.40:	8.50:	13.40:	8.50:

Environmental Crack Growth Check for Sustained Stresses
(Kmax less than Keac): NOT SET

BLOCK CASE NO. 4

S T E P	M: A: T: L:	NUMBER OF FATIGUE CYCLES	S0 (t1)	S0 (t2)	S1 (t1)	S1 (t2)
1:	1:	2.00 :	96.10:	3.90:	96.10:	3.90:
2:	1:	4.00 :	88.10:	4.30:	88.10:	4.30:
3:	1:	8.00 :	80.00:	4.80:	80.00:	4.80:
4:	1:	15.00 :	72.00:	5.20:	72.00:	5.20:
5:	1:	49.00 :	64.00:	5.60:	64.00:	5.60:
6:	1:	81.00 :	55.90:	6.00:	55.90:	6.00:
7:	1:	178.00 :	47.90:	6.40:	47.90:	6.40:
8:	1:	641.00 :	39.90:	6.80:	39.90:	6.80:

9:	1:	3120.00 :	31.90:	7.20:	31.90:	7.20:
10:	1:	3405.00 :	23.80:	7.60:	23.80:	7.60:
11:	1:	5019.00 :	21.40:	7.80:	21.40:	7.80:
12:	1:	28853.00 :	19.80:	7.80:	19.80:	7.80:
13:	1:	91655.00 :	18.20:	7.90:	18.20:	7.90:

Environmental Crack Growth Check for Sustained Stresses
(Kmax less than Keac): NOT SET

HH Pin all cold
MODEL: SC07

FATIGUE SCHEDULE BLOCK STRESS TABLE

VCMAGNET all cold ~

S T E P	M: A: T: L:	NUMBER OF FATIGUE CYCLES	S0 (ksi) (t1)	S0 (ksi) (t2)	S1 (ksi) (t1)	S1 (ksi) (t2)
1:	1:	1757.00 :	0.00:	0.00:	38.91:	5.94:
2:	1:	2148.00 :	0.00:	0.00:	31.91:	6.78:
3:	1:	13668.00 :	0.00:	0.00:	27.03:	7.31:
4:	1:	38857.00 :	0.00:	0.00:	23.22:	7.74:
5:	1:	110517.00 :	0.00:	0.00:	20.67:	7.95:
6:	1:	150546.00 :	0.00:	0.00:	18.87:	8.16:
7:	1:	195456.00 :	0.00:	0.00:	17.49:	8.38:
8:	1:	1440631.00 :	0.00:	0.00:	16.86:	8.38:

Environmental Crack Growth Check for Sustained Stresses
(Kmax less than Keac): NOT SET

HH Pin all cold
MODEL: SC07

FATIGUE SCHEDULE BLOCK STRESS TABLE

VCMAGNET all cold ~

S T E P	M: A: T: L:	NUMBER OF FATIGUE CYCLES	S0 (ksi) (t1)	S0 (ksi) (t2)	S1 (ksi) (t1)	S1 (ksi) (t2)
1:	1:	17832.00 :	0.00:	0.00:	45.69:	5.19:
2:	1:	594.00 :	0.00:	0.00:	45.69:	5.19:
3:	1:	695448.00 :	0.00:	0.00:	23.96:	7.63:
4:	1:	30.00 :	0.00:	0.00:	45.69:	5.19:
5:	1:	17832.00 :	0.00:	0.00:	45.69:	5.19:

Environmental Crack Growth Check for Sustained Stresses
(Kmax less than Keac): NOT SET

HH Pin all cold
MODEL: SC07

FATIGUE SCHEDULE BLOCK STRESS TABLE

VCMAGNET all cold ~

S T E	M: A: T:	NUMBER OF FATIGUE	S0 (ksi)	S1 (ksi)

P	L:	CYCLES	(t1)	(t2)	(t1)	(t2)
1:	1:	34.00	0.00:	0.00:	14.95:	9.01:
2:	1:	34.00	0.00:	0.00:	14.74:	9.01:
3:	1:	60.00	0.00:	0.00:	14.52:	9.01:
4:	1:	179.00	0.00:	0.00:	14.31:	9.01:
5:	1:	117.00	0.00:	0.00:	14.95:	9.01:
6:	1:	414.00	0.00:	0.00:	14.74:	9.01:
7:	1:	2404.00	0.00:	0.00:	14.52:	9.01:
8:	1:	9789.00	0.00:	0.00:	14.31:	9.01:
9:	1:	62675.00	0.00:	0.00:	14.21:	9.01:

Environmental Crack Growth Check for Sustained Stresses
(Kmax less than Keac): NOT SET

HH Pin all cold
MODEL: SC07

FATIGUE SCHEDULE BLOCK STRESS TABLE

VCMAGNET all cold

S T E P	M: A: T: L:	NUMBER OF FATIGUE CYCLES	S0 (ksi) (t1)	S0 (ksi) (t2)	S1 (ksi) (t1)	S1 (ksi) (t2)
1:	1:	2.00	0.00:	0.00:	101.88:	4.13:
2:	1:	4.00	0.00:	0.00:	93.40:	4.56:
3:	1:	8.00	0.00:	0.00:	84.81:	5.09:
4:	1:	15.00	0.00:	0.00:	76.33:	5.51:
5:	1:	49.00	0.00:	0.00:	67.85:	5.94:
6:	1:	81.00	0.00:	0.00:	59.26:	6.36:
7:	1:	178.00	0.00:	0.00:	50.78:	6.78:
8:	1:	641.00	0.00:	0.00:	42.30:	7.21:
9:	1:	3120.00	0.00:	0.00:	33.82:	7.63:
10:	1:	3405.00	0.00:	0.00:	25.23:	8.06:
11:	1:	5019.00	0.00:	0.00:	22.69:	8.27:
12:	1:	28853.00	0.00:	0.00:	20.99:	8.27:
13:	1:	91655.00	0.00:	0.00:	19.29:	8.38:

Environmental Crack Growth Check for Sustained Stresses
(Kmax less than Keac): NOT SET

HH Pin all cold
MODEL: SC07

ANALYSIS RESULTS:

Schedl	Blk Step	Cycles	Flaw Size a	Flaw Size c	K max a-tip	
1	1	1953580.	0.0683	0.0753	11.010	t
1	2	3907160.	0.0686	0.0757	11.030	t
1	3	5860740.	0.0689	0.0760	11.050	t
1	4	7814320.	0.0691	0.0763	11.070	t
1	5	8546056.	0.0775	0.0866	13.704	
1	6	9277792.	0.0877	0.0994	14.520	
1	7	10009528.	0.1003	0.1158	15.477	
1	8	10741264.	0.1163	0.1373	16.635	
1	9	10816970.	0.1163	0.1373	5.449	t
1	10	10892676.	0.1163	0.1373	5.449	t

1	11	10968382.	0.1163	0.1373	5.449 t
1	12	11044088.	0.1163	0.1373	5.449 t
1	13	11177118.	0.1175	0.1390	37.141 t
1	14	11310148.	0.1187	0.1407	37.336 t
1	15	11443178.	0.1200	0.1425	37.534 t
1	16	11576208.	0.1212	0.1442	37.737 t
1	17	11709238.	0.1225	0.1461	37.943 t
1	18	11842268.	0.1239	0.1479	38.154 t
1	19	11975298.	0.1252	0.1498	38.369 t
1	20	12108328.	0.1266	0.1518	38.588 t
1	21	12241358.	0.1280	0.1538	38.811 t
1	22	12374388.	0.1295	0.1559	39.040 t
1	23	12507418.	0.1310	0.1581	39.273 t
1	24	12640448.	0.1326	0.1603	39.520 t

FINAL RESULTS:
Critical Crack Size has NOT been reached.

at Cycle No. 91655.00
of Load Step No. 13 Description: None
of Block No. 24
of Schedule No. 1
Crack Size a = 0.132615
Total Cycles = 12640448.

t - indicates this step or a step in this block was below threshold
Corresponding semi crack length, c = 0.160350

Prepared By	Name/Date Saike wang 4/15/02	LOCKHEED MARTIN	Page/Section No. 1	File Name Coldpin_hh
Checked By	4/15/02	Science, Engineering, Analysis, & Test Mechanical Systems Analysis Department.	Drawing No.	
Title	AMS-02 Magnet strap Clevis Pin (Cold) Section H-H			

SC07

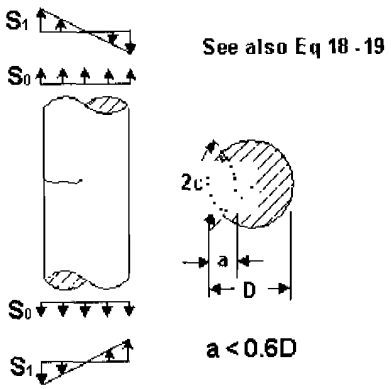

Material: AISI 316LN (-452F)
NASA/FLAGRO Crack case type: SC07

Section Properties:

Pin diameter D = 0.7087 in.

Crack Properties:

a = 0.06805 in.(dye penetrant)

Stress:

Axial Stress S0 = 0.0 ksi
Bending stress S3 = 106.014 ksi (ref. secthh_clevis, pg.12)

Prepared By	Name/Date Saike Wang 4/15/02	LOCKHEED MARTIN	Page/Section No. 2	File Name Coldpin_hh
Checked By	4/15/02	Science, Engineering, Analysis, & Test Mechanical Systems Analysis Department.	Drawing No.	
Title	AMS-02 Magnet strap Clevis Pin (Cold) section H-H			

This clevis attaches the C1W1 FGR3 strap with a 18 mm diameter pin. (Ref drawing SCD0678, issue 07, section H-H)
This pin is at cryogenic temperature (-452F) for Truck transportation, Air transportation, Launch and On - Orbit conditions. The Flagro analysis uses the truck, Air, On-Orbit and Launch case spectrums at cryo temp.
The material data used is from code F3KA13LA2 from the NASGRO library, except that the UTS and YS are changed as per the material property for the 316LN Hiproof material as per OIE205 Rev.d , page 25.

The truck, air, on orbit spectrums are run for 1 mission with a scatter factor of 4 and the Launch spectrum is run for 3 missions with a scatter factor of 4. The final crack from this run is used as the initial crack size for the analysis for the warm landing case.

Dye penetrant inspection is used to inspect the pin and the standard dye penetrant crack size c = 0.075 in. is used (Ref. JSC22267A, table 2)

FATIGUE CRACK GROWTH ANALYSIS

DATE: 04/08/02 TIME: 09:47:48
(computed: NASGRO Version 3.0.4, Jan 2000.)
U.S. customary units [inches, ksi, ksi sqrt(in)]

PROBLEM TITLE

HH Pin cold launch for AMS-02 Magnet straps
(Ref. Drg. SCD0678, issue 07)

Crack Growth Model: Non Interaction
Equation/Table : NASGRO Equation

GEOMETRY

MODEL: SC07-Part-circular Surf. crk on cylinder circ. plane.

Cylinder Diameter, D = 0.7087

FLAW SIZE (Standard NASA JSC NDE):
Method of Inspection: Dye Penetrant

a (init.) = 0.6805E-01

MATERIAL

MATL 1: Edited file data ~2211
~2221

Material Header Info.:

Material 1 Data ID: F3KA13LA2
Alloy Description : AISI 316/316L ~2611

Alloy Cond/HT : Ann sht & plt ; -452F LHe
~2621
Product Form : ~2631

Environment : ~2641

Specimen Type :
Specimen Orientation :
Specimen Thickness :
Specimen Width :
Specimen Test Frequency :
Data Reference :

Material Properties:

Matl: No.	UTS	YS	K1e	K1c	Ak	Bk	Thk	Kc	Keac
1	**203.1**	**162.5**	280.0	200.0				200.0	

Matl: No.	Crack Growth Eqn Constants C	n	p	q	DKo	Cth+	Cth-	Rcl	Alpha	Smax/SIGo

```
:----:---------:-----:----:----:------:------:-----:----:-----:-----:
:  1 :0.220D-09:3.200:0.25:0.25:  8.00:  1.50: 0.10:0.70: 2.50: 0.30:
```

[Ref. OIE205, Rev. D page 25 for UTS and YS of 316L Hi-proof pin)

HH Pin cold launch
MODEL: SC07

FATIGUE SCHEDULE BLOCK INPUT TABLE

VCMAGNET cold Launch

[Note: Stress = Input Value * Scale Factor]

Stress Scaling Factors for Block Case: **1** **(TRUCK3-VCMAGNET)**

Scale Factor for Stress S0: 0.0000
Scale Factor for Stress S1: 1.0601 **(Ref, secthh-clevis, page 12)**

Stress Scaling Factors for Block Case: **2** **(AIR3-VCMAGNET)**

Scale Factor for Stress S0: 0.0000
Scale Factor for Stress S1: 1.0601

Stress Scaling Factors for Block Case: **3** **(ONORBIT2-VCMAGNET)**

Scale Factor for Stress S0: 0.0000
Scale Factor for Stress S1: 1.0601

Stress Scaling Factors for Block Case: **4** **(LIFTOFF-ONLY)**

Scale Factor for Stress S0: 0.0000
Scale Factor for Stress S1: 1.0601

Schedule info. was input manually

Total No. of Blocks in Schedule = 24

Block Number and Case Correspondences

Block Number From - To	Block Case No.
1 - 4	1
5 - 8	2
9 - 12	3
13 - 24	4

Stresses: Tension, bending or pin

HH Pin cold launch
MODEL: SC07

FATIGUE SCHEDULE BLOCK INPUT TABLE

VCMAGNET cold Launch

BLOCK CASE NO. 1

STEP	MAT	NUMBER OF FATIGUE CYCLES	S0 (t1)	S0 (t2)	S1 (t1)	S1 (t2)

1:	1:	1757.00 :	36.70:	5.60:	36.70:	5.60:
2:	1:	2148.00 :	30.10:	6.40:	30.10:	6.40:
3:	1:	13668.00 :	25.50:	6.90:	25.50:	6.90:
4:	1:	38857.00 :	21.90:	7.30:	21.90:	7.30:
5:	1:	110517.00 :	19.50:	7.50:	19.50:	7.50:
6:	1:	150546.00 :	17.80:	7.70:	17.80:	7.70:
7:	1:	195456.00 :	16.50:	7.90:	16.50:	7.90:
8:	1:	1440631.00 :	15.90:	7.90:	15.90:	7.90:

Environmental Crack Growth Check for Sustained Stresses
(Kmax less than Keac): NOT SET

BLOCK CASE NO. 2

S T E P	M: A: T: L:	NUMBER OF FATIGUE CYCLES	S0 (t1)	S0 (t2)	S1 (t1)	S1 (t2)
1:	1:	17832.00 :	43.10:	4.90:	43.10:	4.90:
2:	1:	594.00 :	43.10:	4.90:	43.10:	4.90:
3:	1:	695448.00 :	22.60:	7.20:	22.60:	7.20:
4:	1:	30.00 :	43.10:	4.90:	43.10:	4.90:
5:	1:	17832.00 :	43.10:	4.90:	43.10:	4.90:

Environmental Crack Growth Check for Sustained Stresses
(Kmax less than Keac): NOT SET

BLOCK CASE NO. 3

S T E P	M: A: T: L:	NUMBER OF FATIGUE CYCLES	S0 (t1)	S0 (t2)	S1 (t1)	S1 (t2)
1:	1:	34.00 :	14.10:	8.50:	14.10:	8.50:
2:	1:	34.00 :	13.90:	8.50:	13.90:	8.50:
3:	1:	60.00 :	13.70:	8.50:	13.70:	8.50:
4:	1:	179.00 :	13.50:	8.50:	13.50:	8.50:
5:	1:	117.00 :	14.10:	8.50:	14.10:	8.50:
6:	1:	414.00 :	13.90:	8.50:	13.90:	8.50:
7:	1:	2404.00 :	13.70:	8.50:	13.70:	8.50:
8:	1:	9789.00 :	13.50:	8.50:	13.50:	8.50:
9:	1:	62675.00 :	13.40:	8.50:	13.40:	8.50:

Environmental Crack Growth Check for Sustained Stresses
(Kmax less than Keac): NOT SET

BLOCK CASE NO. 4

S T E P	M: A: T: L:	NUMBER OF FATIGUE CYCLES	S0 (t1)	S0 (t2)	S1 (t1)	S1 (t2)
1:	1:	1.00 :	96.10:	3.90:	96.10:	3.90:
2:	1:	3.00 :	88.10:	4.30:	88.10:	4.30:
3:	1:	5.00 :	80.00:	4.80:	80.00:	4.80:
4:	1:	12.00 :	72.00:	5.20:	72.00:	5.20:
5:	1:	46.00 :	64.00:	5.60:	64.00:	5.60:
6:	1:	78.00 :	55.90:	6.00:	55.90:	6.00:

7:	1:	165.00 :	47.90:	6.40:	47.90:	6.40:
8:	1:	493.00 :	39.90:	6.80:	39.90:	6.80:
9:	1:	2229.00 :	31.90:	7.20:	31.90:	7.20:
10:	1:	2132.00 :	23.80:	7.60:	23.80:	7.60:
11:	1:	2920.00 :	21.40:	7.80:	21.40:	7.80:
12:	1:	22272.00 :	19.80:	7.80:	19.80:	7.80:
13:	1:	82954.00 :	18.20:	7.90:	18.20:	7.90:

Environmental Crack Growth Check for Sustained Stresses
(Kmax less than Keac): NOT SET

HH Pin cold launch
MODEL: SC07

FATIGUE SCHEDULE BLOCK STRESS TABLE

VCMAGNET cold Launch

S T E P	M: A: T: L:	NUMBER OF FATIGUE CYCLES	S0 (ksi) (t1)	S0 (ksi) (t2)	S1 (ksi) (t1)	S1 (ksi) (t2)
1:	1:	1757.00 :	0.00:	0.00:	38.91:	5.94:
2:	1:	2148.00 :	0.00:	0.00:	31.91:	6.78:
3:	1:	13668.00 :	0.00:	0.00:	27.03:	7.31:
4:	1:	38857.00 :	0.00:	0.00:	23.22:	7.74:
5:	1:	110517.00 :	0.00:	0.00:	20.67:	7.95:
6:	1:	150546.00 :	0.00:	0.00:	18.87:	8.16:
7:	1:	195456.00 :	0.00:	0.00:	17.49:	8.38:
8:	1:	1440631.00 :	0.00:	0.00:	16.86:	8.38:

Environmental Crack Growth Check for Sustained Stresses
(Kmax less than Keac): NOT SET

HH Pin cold launch
MODEL: SC07

FATIGUE SCHEDULE BLOCK STRESS TABLE

VCMAGNET cold Launch

S T E P	M: A: T: L:	NUMBER OF FATIGUE CYCLES	S0 (ksi) (t1)	S0 (ksi) (t2)	S1 (ksi) (t1)	S1 (ksi) (t2)
1:	1:	17832.00 :	0.00:	0.00:	45.69:	5.19:
2:	1:	594.00 :	0.00:	0.00:	45.69:	5.19:
3:	1:	695448.00 :	0.00:	0.00:	23.96:	7.63:
4:	1:	30.00 :	0.00:	0.00:	45.69:	5.19:
5:	1:	17832.00 :	0.00:	0.00:	45.69:	5.19:

Environmental Crack Growth Check for Sustained Stresses
(Kmax less than Keac): NOT SET

HH Pin cold launch
MODEL: SC07

FATIGUE SCHEDULE BLOCK STRESS TABLE

VCMAGNET cold Launch

S	M:	NUMBER	S0	S1

T E P	A: T: L:	OF FATIGUE CYCLES	(ksi) (t1)	(t2)	(ksi) (t1)	(t2)
1:	1:	34.00	0.00:	0.00:	14.95:	9.01:
2:	1:	34.00	0.00:	0.00:	14.74:	9.01:
3:	1:	60.00	0.00:	0.00:	14.52:	9.01:
4:	1:	179.00	0.00:	0.00:	14.31:	9.01:
5:	1:	117.00	0.00:	0.00:	14.95:	9.01:
6:	1:	414.00	0.00:	0.00:	14.74:	9.01:
7:	1:	2404.00	0.00:	0.00:	14.52:	9.01:
8:	1:	9789.00	0.00:	0.00:	14.31:	9.01:
9:	1:	62675.00	0.00:	0.00:	14.21:	9.01:

Environmental Crack Growth Check for Sustained Stresses
(Kmax less than Keac): NOT SET

HH Pin cold launch
MODEL: SC07

FATIGUE SCHEDULE BLOCK STRESS TABLE

VCMAGNET cold Launch

S T E P	M: A: T: L:	NUMBER OF FATIGUE CYCLES	S0 (ksi) (t1)	(t2)	S1 (ksi) (t1)	(t2)
1:	1:	1.00	0.00:	0.00:	101.88:	4.13:
2:	1:	3.00	0.00:	0.00:	93.40:	4.56:
3:	1:	5.00	0.00:	0.00:	84.81:	5.09:
4:	1:	12.00	0.00:	0.00:	76.33:	5.51:
5:	1:	46.00	0.00:	0.00:	67.85:	5.94:
6:	1:	78.00	0.00:	0.00:	59.26:	6.36:
7:	1:	165.00	0.00:	0.00:	50.78:	6.78:
8:	1:	493.00	0.00:	0.00:	42.30:	7.21:
9:	1:	2229.00	0.00:	0.00:	33.82:	7.63:
10:	1:	2132.00	0.00:	0.00:	25.23:	8.06:
11:	1:	2920.00	0.00:	0.00:	22.69:	8.27:
12:	1:	22272.00	0.00:	0.00:	20.99:	8.27:
13:	1:	82954.00	0.00:	0.00:	19.29:	8.38:

Environmental Crack Growth Check for Sustained Stresses
(Kmax less than Keac): NOT SET

HH Pin cold launch
MODEL: SC07

ANALYSIS RESULTS:

Sched	Blk Step	Cycles	Flaw Size a	c	K max a-tip
1	1	1953580.	0.0683	0.0753	11.010 t
1	2	3907160.	0.0686	0.0757	11.030 t
1	3	5860740.	0.0689	0.0760	11.050 t
1	4	7814320.	0.0691	0.0763	11.070 t
1	5	8546056.	0.0775	0.0866	13.704
1	6	9277792.	0.0877	0.0994	14.520
1	7	10009528.	0.1003	0.1158	15.477
1	8	10741264.	0.1163	0.1373	16.635

1	9	10816970.	0.1163	0.1373	5.449 t
1	10	10892676.	0.1163	0.1373	5.449 t
1	11	10968382.	0.1163	0.1373	5.449 t
1	12	11044088.	0.1163	0.1373	5.449 t
1	13	11157398.	0.1172	0.1386	37.137 t
1	14	11270708.	0.1182	0.1399	37.289 t
1	15	11384018.	0.1191	0.1413	37.442 t
1	16	11497328.	0.1201	0.1426	37.597 t
1	17	11610638.	0.1211	0.1440	37.755 t
1	18	11723948.	0.1221	0.1454	37.916 t
1	19	11837258.	0.1231	0.1469	38.078 t
1	20	11950568.	0.1242	0.1483	38.243 t
1	21	12063878.	0.1252	0.1498	38.411 t
1	22	12177188.	0.1263	0.1513	38.581 t
1	23	12290498.	0.1274	0.1529	38.754 t
1	24	12403808.	0.1285	0.1545	38.929 t

FINAL RESULTS:
Critical Crack Size has NOT been reached.

at Cycle No. 82954.00
of Load Step No. 13 Description: None
of Block No. 24
of Schedule No. 1
Crack Size a = 0.128496
Total Cycles = 12403808.

t - indicates this step or a step in this block was below threshold
Corresponding semi crack length, c = 0.154460

Prepared By	Name/Date Saike Wang 4/15/02	LOCKHEED MARTIN	Page/Section No. 1	File Name Warmpin_hh
Checked By	4/15/02	Science, Engineering, Analysis, & Test Mechanical Systems Analysis Department.	Drawing No.	SCD0678
Title	AMS-02 Magnet strap Clevis Pin (Warm) Section H-H			

SC07

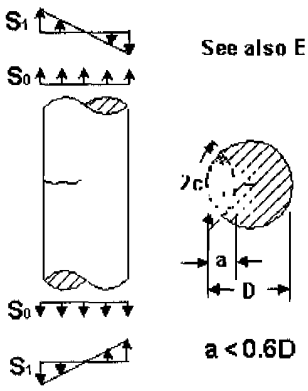

Material: AISI 316LN (75F)
NASA/FLAGRO Crack case type: SC07

Section Properties:

Pin diameter D = 0.7087 in.

Crack Properties:

a = 0.1285 in. (Final crack size from HH-pin-cold-launch, page 6)

Stress:

Axial Stress S0 = 0.0 ksi
Bending stress S3 = 91.636 ksi (Ref. Secthh_clevis, pg.12)

Prepared By	Name/Date Saike Wang 4/15/02	LOCKHEED MARTIN	Page/Section No. 2	File Name Warmpin_hh
Checked By	4/15/02	Science, Engineering, Analysis, & Test Mechanical Systems Analysis Department.	Drawing No.	SCD0678
Title	AMS-02 Magnet Clevis Pin (warm) Section H-H			

This clevis attaches the C1W1 FGR3 strap with a 18 mm diameter pin. (Ref drawing SCD0678, issue 07, section H-H)
This clevis is at room temperature (75F) for Landing conditions. The Flagro analysis uses the Landing case spectrums at room temp.
The material data used is from code F3KA13AB1 from the NASGRO library, except that the UTS and YS are changed as per the material property for the 316LN Hiproof material as per OIE205 Rev.d , page 25.

Landing spectrum is run for 3 missions with a scatter factor of 4. The final crack size from the cold launch case is used as the initial crack size for this analysis.(Ref. HH-pin-cold-launch, page 6)

FATIGUE CRACK GROWTH ANALYSIS

DATE: 04/08/02 TIME: 10:57:12
(computed: NASGRO Version 3.0.4, Jan 2000.)
U.S. customary units [inches, ksi, ksi sqrt(in)]

PROBLEM TITLE

HH Pin warm landing for AMS-02 Magnet strap
(Ref, Drg. SCD0678, issue 07)

Crack Growth Model: Non Interaction
Equation/Table : NASGRO Equation

GEOMETRY

MODEL: SC07-Part-circular Surf. crk on cylinder circ. plane.

Cylinder Diameter, D = 0.7087

FLAW SIZE: (User specified)

a (init.) = 0.1285 **(Ref. Final crack size from HH-pin-cold-launch, page 6)**

MATERIAL

MATL 1: Edited file data ~2211
~2221

Material Header Info.:

Material 1 Data ID: F3KA13AB1
Alloy Description : AISI 316/316L ~2611

Alloy Cond/HT : Ann sht & plt ~262
1
Product Form : ~2631

Environment : ~2641

Specimen Type :
Specimen Orientation :
Specimen Thickness :
Specimen Width :
Specimen Test Frequency :
Data Reference :

Material Properties:

Matl No.	UTS	YS	K1e	K1c	Ak	Bk	Thk	Kc	Keac
1	**127.6**	**108.1**	280.0	200.0				200.0	

Matl No.	Crack Growth Eqn Constants									
	C	n	p	q	DKo	Cth+	Cth-	Rcl	Alpha	Smax/SIGo
1	0.220D-09	3.200	0.25	0.25	3.50	1.50	0.10	0.70	2.50	0.30

| Ref. OIE205, Rev. D page 25 for UTS and YS of 316L Hi-proof pin)

HH Pin warm landing
MODEL: SC07

FATIGUE SCHEDULE BLOCK INPUT TABLE

Warm Landing

[Note: Stress = Input Value * Scale Factor]

Stress Scaling Factors for Block Case: **1** **[LAND-ONLY)**

Scale Factor for Stress S0: 0.0000
Scale Factor for Stress S1: 0.91636 **|Ref. Secthh_clevis, page 12)**

Schedule info. was input manually

Total No. of Blocks in Schedule = 12

Block Number and Case Correspondences

Block Number			Block Case No.
From	-	To	
1	-	12	1

Stresses: Tension, bending or pin

HH Pin warm landing
MODEL: SC07

FATIGUE SCHEDULE BLOCK INPUT TABLE

Warm Landing

SINGLE DISTINCT BLOCK

S T E P	M: A: T: L:	NUMBER OF FATIGUE CYCLES	S0 |t1)	S0 |t2)	S1 |t1)	S1 |t2)
1:	1:	1.00	100.00:	3.70:	100.00:	3.70:
2:	1:	1.00	91.30:	4.20:	91.30:	4.20:
3:	1:	3.00	82.60:	4.70:	82.60:	4.70:
4:	1:	3.00	74.00:	5.20:	74.00:	5.20:
5:	1:	3.00	65.30:	5.70:	65.30:	5.70:
6:	1:	3.00	56.60:	6.10:	56.60:	6.10:
7:	1:	13.00	47.90:	6.60:	47.90:	6.60:
8:	1:	148.00	39.20:	7.10:	39.20:	7.10:
9:	1:	891.00	30.60:	7.60:	30.60:	7.60:
10:	1:	1273.00	21.90:	8.10:	21.90:	8.10:
11:	1:	2099.00	19.30:	8.20:	19.30:	8.20:
12:	1:	6581.00	17.50:	8.30:	17.50:	8.30:
13:	1:	8701.00	15.80:	8.40:	15.80:	8.40:

Environmental Crack Growth Check for Sustained Stresses
(Kmax less than Keac): NOT SET

HH Pin warm landing
MODEL: SC07

FATIGUE SCHEDULE BLOCK STRESS TABLE

Warm Landing

STEP	MAT	NUMBER OF FATIGUE CYCLES	S0 (ksi) (t1)	S0 (ksi) (t2)	S1 (ksi) (t1)	S1 (ksi) (t2)
1	1	1.00	0.00	0.00	91.64	3.39
2	1	1.00	0.00	0.00	83.66	3.85
3	1	3.00	0.00	0.00	75.69	4.31
4	1	3.00	0.00	0.00	67.81	4.77
5	1	3.00	0.00	0.00	59.84	5.22
6	1	3.00	0.00	0.00	51.87	5.59
7	1	13.00	0.00	0.00	43.89	6.05
8	1	148.00	0.00	0.00	35.92	6.51
9	1	891.00	0.00	0.00	28.04	6.96
10	1	1273.00	0.00	0.00	20.07	7.42
11	1	2099.00	0.00	0.00	17.69	7.51
12	1	6581.00	0.00	0.00	16.04	7.61
13	1	8701.00	0.00	0.00	14.48	7.70

Environmental Crack Growth Check for Sustained Stresses
(Kmax less than Keac): NOT SET

HH Pin warm landing
MODEL: SC07

ANALYSIS RESULTS:

Sched1	Blk Step	Cycles	Flaw Size a	Flaw Size c	K max a-tip
1	1	19720.	0.1288	0.1549	35.176
1	2	39440.	0.1291	0.1553	35.219
1	3	59160.	0.1294	0.1557	35.261
1	4	78880.	0.1297	0.1561	35.304
1	5	98600.	0.1300	0.1566	35.346
1	6	118320.	0.1303	0.1570	35.389
1	7	138040.	0.1306	0.1574	35.433
1	8	157760.	0.1309	0.1579	35.476
1	9	177480.	0.1312	0.1583	35.520
1	10	197200.	0.1315	0.1587	35.563
1	11	216920.	0.1318	0.1592	35.607
1	12	236640.	0.1321	0.1596	35.651

FINAL RESULTS:
Critical Crack Size has NOT been reached.

at Cycle No. 8701.00
of Load Step No. 13 Description: None
of Block No. 12
of Schedule No. 1
Crack Size a = 0.132090
Total Cycles = 236640.00

t - indicates this step or a step in this block was below threshold
Corresponding semi crack length, c = 0.159595

Prepared By	Name/Date Saike Wang 4/15/02	LOCKHEED MARTIN	Page/Section No. 1	File Name Cryopin_jj
Checked By	4/15/02	Science, Engineering, Analysis, & Test Mechanical Systems Analysis Department.	Drawing No.	SCD0678
Title	AMS-02 Magnet strap Clevis Pin (Cryo) Section J-J.			

SC07

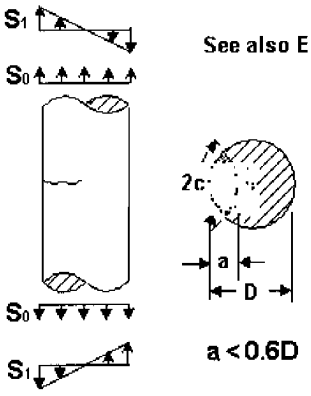

Material: AISI 316LN (-452F)
NASA/FLAGRO Crack case type: SC07

Section Properties:

Pin diameter D = 0.5512 in.

Crack Properties:

a = 0.06638 in.(dye penetrant)

Stress:

Axial Stress S0 = 0.0 ksi
Bending stress S3 = 61.624 ksi (Ref. Sectjj_clevis, pg.12)

Prepared By	Name/Date Saike Wang 4/15/02	LOCKHEED MARTIN	Page/Section No. 2	File Name Cryopin_jj
Checked By	4/15/02	Science, Engineering, Analysis, & Test Mechanical Systems Analysis Department.	Drawing No.	SCD0678
Title	AMS-02 Magnet Clevis Pin (Cryo) Section J-J			

This clevis attaches the C1W1 S2 glass strap with a 14 mm diameter pin. (Ref drawing SCD0678, issue 07, section J-J)
This clevis is at cryogenic temperature (-452F) for Truck transportation, Air transportation, On - Orbit condition and Launch/Landing conditions. The Flagro analysis uses the truck, Air, On-Orbit and Launch/Landing case spectrums at cryo temp.
The material data used is from code F3KA13LA2 from the NASGRO library, except that the UTS and YS are changed as per the material property for the 316LN Hiproof material as per OIE205 Rev.d , page 25.

The truck, air, on orbit spectrums are run for 1 mission with a scatter factor of 4 and the Launch/Landing spectrum is run for 3 missions with a scatter factor of 4. Dye penetrant inspection is used to inspect the pin, and the standard dye penetrant crack size c = 0.075 in. is used. (Ref. JSC22267A, table 2).

FATIGUE CRACK GROWTH ANALYSIS

DATE: 04/08/02 TIME: 13:38:04
(computed: NASGRO Version 3.0.4, Jan 2000.)
U.S. customary units [inches, ksi, ksi sqrt(in)]

PROBLEM TITLE

JJ Pin cold Launch and Landing for AMS-02 Magnet straps (Ref. Drg. SCD0678, issue 07)

Crack Growth Model: Non Interaction
Equation/Table : NASGRO Equation

GEOMETRY

MODEL: SC07-Part-circular Surf. crk on cylinder circ. plane.

Cylinder Diameter, D = 0.5512

FLAW SIZE (Standard NASA JSC NDE):
Method of Inspection: Dye Penetrant

a (init.) = 0.6638E-01

MATERIAL

MATL 1: Edited file data ~2211
~2221

Material Header Info.:

Material 1 Data ID: F3KA13LA2
Alloy Description : AISI 316/316L ~2611

Alloy Cond/HT : Ann sht & plt ; -452F LHe
~2621
Product Form : ~2631

Environment : ~2641

Specimen Type :
Specimen Orientation :
Specimen Thickness :
Specimen Width :
Specimen Test Frequency :
Data Reference :

Material Properties:

Matl No.	UTS	YS	K1e	K1c	Ak	Bk	Thk	Kc	Keac
1	**203.1**	**162.5**	280.0	200.0				200.0	

Matl No.	Crack Growth Eqn Constants C	n	p	q	DKo	Cth+	Cth-	Rcl	Alpha	Smax/SIGo

```
:----:---------:-----:----:----:------:------:-----:----:-----:-----:
:  1 :0.220D-09:3.200:0.25:0.25:  8.00:  1.50: 0.10:0.70: 2.50: 0.30:
```

(Ref. OIE205, Rev. D page 25 for UTS and YS of 316L Hi-proof pin)

JJ Pin all cold
MODEL: SC07

FATIGUE SCHEDULE BLOCK INPUT TABLE

VC Magnet all cold ~

[Note: Stress = Input Value * Scale Factor]

Stress Scaling Factors for Block Case: **1** **(TRUCK3-VCMAGNET)**

Scale Factor for Stress S0: 0.0000
Scale Factor for Stress S1: 0.61624 **(Ref, sectjj-clevis, page 12)**

Stress Scaling Factors for Block Case: **2** **(AIR3-VCMAGNET)**

Scale Factor for Stress S0: 0.0000
Scale Factor for Stress S1: 0.61624

Stress Scaling Factors for Block Case: **3** **(ONORBIT2-VCMAGNET)**

Scale Factor for Stress S0: 0.0000
Scale Factor for Stress S1: 0.61624

Stress Scaling Factors for Block Case: **4** **(GSFC-VCMAGNET)**

Scale Factor for Stress S0: 0.0000
Scale Factor for Stress S1: 0.61624

Schedule info. was input manually

Total No. of Blocks in Schedule = 24

Block Number and Case Correspondences

Block Number From - To	Block Case No.
1 - 4	1
5 - 8	2
9 - 12	3
13 - 24	4

Stresses: Tension, bending or pin

JJ Pin all cold
MODEL: SC07

FATIGUE SCHEDULE BLOCK INPUT TABLE

VC Magnet all cold ~

BLOCK CASE NO. 1

S T E P	M: A: T: L:	NUMBER OF FATIGUE CYCLES	S0 (t1)	S0 (t2)	S1 (t1)	S1 (t2)

1:	1:	1757.00 :	36.70:	5.60:	36.70:	5.60:
2:	1:	2148.00 :	30.10:	6.40:	30.10:	6.40:
3:	1:	13668.00 :	25.50:	6.90:	25.50:	6.90:
4:	1:	38857.00 :	21.90:	7.30:	21.90:	7.30:
5:	1:	110517.00 :	19.50:	7.50:	19.50:	7.50:
6:	1:	150546.00 :	17.80:	7.70:	17.80:	7.70:
7:	1:	195456.00 :	16.50:	7.90:	16.50:	7.90:
8:	1:	1440631.00 :	15.90:	7.90:	15.90:	7.90:

Environmental Crack Growth Check for Sustained Stresses
(Kmax less than Keac): NOT SET

BLOCK CASE NO. 2

S T E P	M: A: T: L:	NUMBER OF FATIGUE CYCLES	S0 (t1)	S0 (t2)	S1 (t1)	S1 (t2)
1:	1:	17832.00 :	43.10:	4.90:	43.10:	4.90:
2:	1:	594.00 :	43.10:	4.90:	43.10:	4.90:
3:	1:	695448.00 :	22.60:	7.20:	22.60:	7.20:
4:	1:	30.00 :	43.10:	4.90:	43.10:	4.90:
5:	1:	17832.00 :	43.10:	4.90:	43.10:	4.90:

Environmental Crack Growth Check for Sustained Stresses
(Kmax less than Keac): NOT SET

BLOCK CASE NO. 3

S T E P	M: A: T: L:	NUMBER OF FATIGUE CYCLES	S0 (t1)	S0 (t2)	S1 (t1)	S1 (t2)
1:	1:	34.00 :	14.10:	8.50:	14.10:	8.50:
2:	1:	34.00 :	13.90:	8.50:	13.90:	8.50:
3:	1:	60.00 :	13.70:	8.50:	13.70:	8.50:
4:	1:	179.00 :	13.50:	8.50:	13.50:	8.50:
5:	1:	117.00 :	14.10:	8.50:	14.10:	8.50:
6:	1:	414.00 :	13.90:	8.50:	13.90:	8.50:
7:	1:	2404.00 :	13.70:	8.50:	13.70:	8.50:
8:	1:	9789.00 :	13.50:	8.50:	13.50:	8.50:
9:	1:	62675.00 :	13.40:	8.50:	13.40:	8.50:

Environmental Crack Growth Check for Sustained Stresses
(Kmax less than Keac): NOT SET

BLOCK CASE NO. 4

S T E P	M: A: T: L:	NUMBER OF FATIGUE CYCLES	S0 (t1)	S0 (t2)	S1 (t1)	S1 (t2)
1:	1:	2.00 :	96.10:	3.90:	96.10:	3.90:
2:	1:	4.00 :	88.10:	4.30:	88.10:	4.30:
3:	1:	8.00 :	80.00:	4.80:	80.00:	4.80:
4:	1:	15.00 :	72.00:	5.20:	72.00:	5.20:
5:	1:	49.00 :	64.00:	5.60:	64.00:	5.60:
6:	1:	81.00 :	55.90:	6.00:	55.90:	6.00:

7:	1:	178.00 :	47.90:	6.40:	47.90:	6.40:
8:	1:	641.00 :	39.90:	6.80:	39.90:	6.80:
9:	1:	3120.00 :	31.90:	7.20:	31.90:	7.20:
10:	1:	3405.00 :	23.80:	7.60:	23.80:	7.60:
11:	1:	5019.00 :	21.40:	7.80:	21.40:	7.80:
12:	1:	28853.00 :	19.80:	7.80:	19.80:	7.80:
13:	1:	91655.00 :	18.20:	7.90:	18.20:	7.90:

Environmental Crack Growth Check for Sustained Stresses
(Kmax less than Keac): NOT SET

JJ Pin all cold
MODEL: SC07

FATIGUE SCHEDULE BLOCK STRESS TABLE

VC Magnet all cold

S	M:	NUMBER	S0		S1	
T	A:	OF				
E	T:	FATIGUE	(ksi)		(ksi)	
P	L:	CYCLES	(t1) :	(t2)	(t1) :	(t2)
1:	1:	1757.00 :	0.00:	0.00:	22.62:	3.45:
2:	1:	2148.00 :	0.00:	0.00:	18.55:	3.94:
3:	1:	13668.00 :	0.00:	0.00:	15.71:	4.25:
4:	1:	38857.00 :	0.00:	0.00:	13.50:	4.50:
5:	1:	110517.00 :	0.00:	0.00:	12.02:	4.62:
6:	1:	150546.00 :	0.00:	0.00:	10.97:	4.75:
7:	1:	195456.00 :	0.00:	0.00:	10.17:	4.87:
8:	1:	1440631.00 :	0.00:	0.00:	9.80:	4.87:

Environmental Crack Growth Check for Sustained Stresses
(Kmax less than Keac): NOT SET

JJ Pin all cold
MODEL: SC07

FATIGUE SCHEDULE BLOCK STRESS TABLE

VC Magnet all cold

S	M:	NUMBER	S0		S1	
T	A:	OF				
E	T:	FATIGUE	(ksi)		(ksi)	
P	L:	CYCLES	(t1) :	(t2)	(t1) :	(t2)
1:	1:	17832.00 :	0.00:	0.00:	26.56:	3.02:
2:	1:	594.00 :	0.00:	0.00:	26.56:	3.02:
3:	1:	695448.00 :	0.00:	0.00:	13.93:	4.44:
4:	1:	30.00 :	0.00:	0.00:	26.56:	3.02:
5:	1:	17832.00 :	0.00:	0.00:	26.56:	3.02:

Environmental Crack Growth Check for Sustained Stresses
(Kmax less than Keac): NOT SET

JJ Pin all cold
MODEL: SC07

FATIGUE SCHEDULE BLOCK STRESS TABLE

VC Magnet all cold

S	M:	NUMBER	S0	S1

TEP	ATL	OF FATIGUE CYCLES	(ksi) (t1)	(ksi) (t2)	(ksi) (t1)	(ksi) (t2)
1	1	34.00	0.00	0.00	8.69	5.24
2	1	34.00	0.00	0.00	8.57	5.24
3	1	60.00	0.00	0.00	8.44	5.24
4	1	179.00	0.00	0.00	8.32	5.24
5	1	117.00	0.00	0.00	8.69	5.24
6	1	414.00	0.00	0.00	8.57	5.24
7	1	2404.00	0.00	0.00	8.44	5.24
8	1	9789.00	0.00	0.00	8.32	5.24
9	1	62675.00	0.00	0.00	8.26	5.24

Environmental Crack Growth Check for Sustained Stresses
(Kmax less than Keac): NOT SET

JJ Pin all cold
MODEL: SC07

FATIGUE SCHEDULE BLOCK STRESS TABLE

VC Magnet all cold

STEP	MATL	NUMBER OF FATIGUE CYCLES	S0 (ksi) (t1)	S0 (ksi) (t2)	S1 (ksi) (t1)	S1 (ksi) (t2)
1	1	2.00	0.00	0.00	59.22	2.40
2	1	4.00	0.00	0.00	54.29	2.65
3	1	8.00	0.00	0.00	49.30	2.96
4	1	15.00	0.00	0.00	44.37	3.20
5	1	49.00	0.00	0.00	39.44	3.45
6	1	81.00	0.00	0.00	34.45	3.70
7	1	178.00	0.00	0.00	29.52	3.94
8	1	641.00	0.00	0.00	24.59	4.19
9	1	3120.00	0.00	0.00	19.66	4.44
10	1	3405.00	0.00	0.00	14.67	4.68
11	1	5019.00	0.00	0.00	13.19	4.81
12	1	28853.00	0.00	0.00	12.20	4.81
13	1	91655.00	0.00	0.00	11.22	4.87

Environmental Crack Growth Check for Sustained Stresses
(Kmax less than Keac): NOT SET

JJ Pin all cold
MODEL: SC07

ANALYSIS RESULTS:

Schedl	Blk Step	Cycles	Flaw Size a	Flaw Size c	K max a-tip
1	1	1953580.	0.0664	0.0750	6.257 t
1	2	3907160.	0.0664	0.0750	6.257 t
1	3	5860740.	0.0664	0.0750	6.257 t
1	4	7814320.	0.0664	0.0750	6.257 t
1	5	8546056.	0.0664	0.0750	7.348 t
1	6	9277792.	0.0664	0.0750	7.348 t
1	7	10009528.	0.0664	0.0750	7.348 t
1	8	10741264.	0.0664	0.0750	7.348 t

1	9	10816970.	0.0664	0.0750	2.404 t
1	10	10892676.	0.0664	0.0750	2.404 t
1	11	10968382.	0.0664	0.0750	2.404 t
1	12	11044088.	0.0664	0.0750	2.404 t
1	13	11177118.	0.0664	0.0750	16.385 t
1	14	11310148.	0.0664	0.0751	16.387 t
1	15	11443178.	0.0664	0.0751	16.390 t
1	16	11576208.	0.0665	0.0751	16.392 t
1	17	11709238.	0.0665	0.0751	16.395 t
1	18	11842268.	0.0665	0.0752	16.397 t
1	19	11975298.	0.0665	0.0752	16.400 t
1	20	12108328.	0.0666	0.0752	16.402 t
1	21	12241358.	0.0666	0.0752	16.405 t
1	22	12374388.	0.0666	0.0753	16.407 t
1	23	12507418.	0.0666	0.0753	16.410 t
1	24	12640448.	0.0666	0.0753	16.412 t

FINAL RESULTS:
Critical Crack Size has NOT been reached.

at Cycle No. 91655.00
of Load Step No. 13 Description: None
of Block No. 24
of Schedule No. 1
Crack Size a = 0.666383E-01
Total Cycles = 12640448.

t - indicates this step or a step in this block was below threshold
Corresponding semi crack length, c = 0.753300E-01

Prepared By	Name/Date Saike wang 4/16/02	LOCKHEED MARTIN	Page/Section No. 1	File Name Coldpin_jj
Checked By	4/16/02	Science, Engineering, Analysis, & Test Mechanical Systems Analysis Department.	Drawing No.	
Title	AMS-02 Magnet strap Clevis (Cold) Section J-J.			

SC07

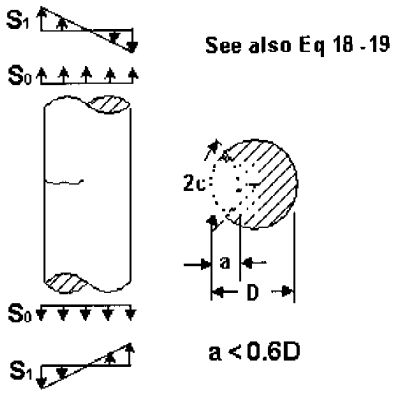

Material: AISI 316LN (-452F)

NASA/FLAGRO Crack case type: SC07

Section Properties:

Pin diameter D = 0.5512 in.

Crack Properties:

a = 0.06638 in.(dye penetrant)

Stress:

Axial Stress S0 = 0.0 ksi

Bending stress S3 = 61.624 ksi (ref. sectjj_clevis, pg.12)

Prepared By	Name/Date Saike Wang 4/15/02	LOCKHEED MARTIN	Page/Section No. 2	File Name Coldpin_jj
Checked By	4/16/02	Science, Engineering, Analysis, & Test Mechanical Systems Analysis Department.	Drawing No.	
Title	AMS-02 Magnet strap Clevis Pin (Cold) section J-J			

This clevis attaches the C1W1 S2 glass strap with a 14 mm diameter pin. (Ref drawing SCD0578, issue 07, section J-J)
This pin is at cryogenic temperature (-452F) for Truck transportation, Air transportation, Launch and On - Orbit conditions. The Flagro analysis uses the truck, Air, On-Orbit and Launch case spectrums at cryo temp.
The material data used is from code F3KA13LA2 from the NASGRO library, except that the UTS and YS are changed as per the material property for the 316LN Hiproof material as per OIE205 Rev.d , page 25.

The truck, air, on orbit spectrums are run for 1 mission with a scatter factor of 4 and the Launch spectrum is run for 3 missions with a scatter factor of 4. The final crack from this run is used as the initial crack size for the analysis for the warm landing case.

Dye penetrant inspection is used to inspect the pin and the standard dye penetrant crack size c = 0.075 in. is used (Ref. JSC22267A, table 2)

FATIGUE CRACK GROWTH ANALYSIS

DATE: 04/08/02 TIME: 14:08:11
(computed: NASGRO Version 3.0.4, Jan 2000.)
U.S. customary units [inches, ksi, ksi sqrt(in)]

PROBLEM TITLE

JJ Pin cold launch for AMS-02 magnet Straps
(Ref. Drg. SCD0578, issue 07)

Crack Growth Model: Non Interaction
Equation/Table : NASGRO Equation

GEOMETRY

MODEL: SC07-Part-circular Surf. crk on cylinder circ. plane.

Cylinder Diameter, D = 0.5512

FLAW SIZE (Standard NASA JSC NDE):
Method of Inspection: Dye Penetrant

a (init.) = 0.6638E-01

MATERIAL

MATL 1: Edited file data ~2211
~2221

Material Header Info.:

Material 1 Data ID: F3KA13LA2
Alloy Description : AISI 316/316L ~2611

Alloy Cond/HT : Ann sht & plt ; -452F LHe
~2621
Product Form : ~2631

Environment : ~2641

Specimen Type :
Specimen Orientation :
Specimen Thickness :
Specimen Width :
Specimen Test Frequency :
Data Reference :

Material Properties:

Matl No.	UTS	YS	K1e	K1c	Ak	Bk	Thk	Kc	Keac
1	**203.1**	**162.5**	280.0	200.0				200.0	

Matl No.	Crack Growth Eqn Constants								
	C	n	p	q	DKo	Cth+	Cth-	Rcl	Alpha:Smax/SIGo

```
:----:---------:-----:----:----:------:------:-----:----:-----:-----:
:  1 :0.220D-09:3.200:0.25:0.25:  8.00:  1.50: 0.10:0.70: 2.50: 0.30:
```

(Ref. OIE205, Rev.D for UTS and YS for 316L Hi proof stainless steel)

JJ Pin cold launch
MODEL: SC07

FATIGUE SCHEDULE BLOCK INPUT TABLE

VC Magnet cold launch

[Note: Stress = Input Value * Scale Factor]

Stress Scaling Factors for Block Case: **1** **(TRUCK3-VCMAGNET)**

Scale Factor for Stress S0: 0.0000
Scale Factor for Stress S1: 0.61624 **(Ref. Sectjj_clevis, page 12)**

Stress Scaling Factors for Block Case: **2** **(AIR3-VCMAGNET)**

Scale Factor for Stress S0: 0.0000
Scale Factor for Stress S1: 0.61624

Stress Scaling Factors for Block Case: **3** **(ONORBIT2-VCMAGNET)**

Scale Factor for Stress S0: 0.0000
Scale Factor for Stress S1: 0.61624

Stress Scaling Factors for Block Case: **4** **(LIFTOFF-ONLY)**

Scale Factor for Stress S0: 0.0000
Scale Factor for Stress S1: 0.61624

Schedule info. was input manually

Total No. of Blocks in Schedule = 24

Block Number and Case Correspondences

Block Number From - To	Block Case No.
1 - 4	1
5 - 8	2
9 - 12	3
13 - 24	4

Stresses: Tension, bending or pin

JJ Pin cold launch
MODEL: SC07

FATIGUE SCHEDULE BLOCK INPUT TABLE

VC Magnet cold launch

BLOCK CASE NO. 1

S T E P	M: A: T: L:	NUMBER OF FATIGUE CYCLES	S0 (t1)	S0 (t2)	S1 (t1)	S1 (t2)
1	1	1757.00	36.70	5.60	36.70	5.60

2:	1:	2148.00 :	30.10:	6.40:	30.10:	6.40:
3:	1:	13668.00 :	25.50:	6.90:	25.50:	6.90:
4:	1:	38857.00 :	21.90:	7.30:	21.90:	7.30:
5:	1:	110517.00 :	19.50:	7.50:	19.50:	7.50:
6:	1:	150546.00 :	17.80:	7.70:	17.80:	7.70:
7:	1:	195456.00 :	16.50:	7.90:	16.50:	7.90:
8:	1:	1440631.00 :	15.90:	7.90:	15.90:	7.90:

Environmental Crack Growth Check for Sustained Stresses
(Kmax less than Keac): NOT SET

BLOCK CASE NO. 2

S	M:	NUMBER	S0		S1	
T	A:	OF				
E	T:	FATIGUE				
P	L:	CYCLES :	(t1) :	(t2) :	(t1) :	(t2) :
1:	1:	17832.00 :	43.10:	4.90:	43.10:	4.90:
2:	1:	594.00 :	43.10:	4.90:	43.10:	4.90:
3:	1:	695448.00 :	22.60:	7.20:	22.60:	7.20:
4:	1:	30.00 :	43.10:	4.90:	43.10:	4.90:
5:	1:	17832.00 :	43.10:	4.90:	43.10:	4.90:

Environmental Crack Growth Check for Sustained Stresses
(Kmax less than Keac): NOT SET

BLOCK CASE NO. 3

S	M:	NUMBER	S0		S1	
T	A:	OF				
E	T:	FATIGUE				
P	L:	CYCLES :	(t1) :	(t2) :	(t1) :	(t2) :
1:	1:	34.00 :	14.10:	8.50:	14.10:	8.50:
2:	1:	34.00 :	13.90:	8.50:	13.90:	8.50:
3:	1:	60.00 :	13.70:	8.50:	13.70:	8.50:
4:	1:	179.00 :	13.50:	8.50:	13.50:	8.50:
5:	1:	117.00 :	14.10:	8.50:	14.10:	8.50:
6:	1:	414.00 :	13.90:	8.50:	13.90:	8.50:
7:	1:	2404.00 :	13.70:	8.50:	13.70:	8.50:
8:	1:	9789.00 :	13.50:	8.50:	13.50:	8.50:
9:	1:	62675.00 :	13.40:	8.50:	13.40:	8.50:

Environmental Crack Growth Check for Sustained Stresses
(Kmax less than Keac): NOT SET

BLOCK CASE NO. 4

S	M:	NUMBER	S0		S1	
T	A:	OF				
E	T:	FATIGUE				
P	L:	CYCLES :	(t1) :	(t2) :	(t1) :	(t2) :
1:	1:	1.00 :	96.10:	3.90:	96.10:	3.90:
2:	1:	3.00 :	88.10:	4.30:	88.10:	4.30:
3:	1:	5.00 :	80.00:	4.80:	80.00:	4.80:
4:	1:	12.00 :	72.00:	5.20:	72.00:	5.20:
5:	1:	46.00 :	64.00:	5.60:	64.00:	5.60:
6:	1:	78.00 :	55.90:	6.00:	55.90:	6.00:
7:	1:	165.00 :	47.90:	6.40:	47.90:	6.40:

8:	1:	493.00 :	39.90:	6.80:	39.90:	6.80:
9:	1:	2229.00 :	31.90:	7.20:	31.90:	7.20:
10:	1:	2132.00 :	23.80:	7.60:	23.80:	7.60:
11:	1:	2920.00 :	21.40:	7.80:	21.40:	7.80:
12:	1:	22272.00 :	19.80:	7.80:	19.80:	7.80:
13:	1:	82954.00 :	18.20:	7.90:	18.20:	7.90:

Environmental Crack Growth Check for Sustained Stresses
(Kmax less than Keac): NOT SET

JJ Pin cold launch
MODEL: SC07

FATIGUE SCHEDULE BLOCK STRESS TABLE

VC Magnet cold launch

S T E P	M: A: T: L:	NUMBER OF FATIGUE CYCLES	S0 (ksi) (t1)	S0 (ksi) (t2)	S1 (ksi) (t1)	S1 (ksi) (t2)
1:	1:	1757.00 :	0.00:	0.00:	22.62:	3.45:
2:	1:	2148.00 :	0.00:	0.00:	18.55:	3.94:
3:	1:	13668.00 :	0.00:	0.00:	15.71:	4.25:
4:	1:	38857.00 :	0.00:	0.00:	13.50:	4.50:
5:	1:	110517.00 :	0.00:	0.00:	12.02:	4.62:
6:	1:	150546.00 :	0.00:	0.00:	10.97:	4.75:
7:	1:	195456.00 :	0.00:	0.00:	10.17:	4.87:
8:	1:	1440631.00 :	0.00:	0.00:	9.80:	4.87:

Environmental Crack Growth Check for Sustained Stresses
(Kmax less than Keac): NOT SET

JJ Pin cold launch
MODEL: SC07

FATIGUE SCHEDULE BLOCK STRESS TABLE

VC Magnet cold launch

S T E P	M: A: T: L:	NUMBER OF FATIGUE CYCLES	S0 (ksi) (t1)	S0 (ksi) (t2)	S1 (ksi) (t1)	S1 (ksi) (t2)
1:	1:	17832.00 :	0.00:	0.00:	26.56:	3.02:
2:	1:	594.00 :	0.00:	0.00:	26.56:	3.02:
3:	1:	695448.00 :	0.00:	0.00:	13.93:	4.44:
4:	1:	30.00 :	0.00:	0.00:	26.56:	3.02:
5:	1:	17832.00 :	0.00:	0.00:	26.56:	3.02:

Environmental Crack Growth Check for Sustained Stresses
(Kmax less than Keac): NOT SET

JJ Pin cold launch
MODEL: SC07

FATIGUE SCHEDULE BLOCK STRESS TABLE

VC Magnet cold launch

S T	M: A:	NUMBER OF	S0	S1

E P	T: L:	FATIGUE CYCLES	(ksi) (t1)	(t2)	(ksi) (t1)	(t2)
1:	1:	34.00	0.00:	0.00:	8.69:	5.24:
2:	1:	34.00	0.00:	0.00:	8.57:	5.24:
3:	1:	60.00	0.00:	0.00:	8.44:	5.24:
4:	1:	179.00	0.00:	0.00:	8.32:	5.24:
5:	1:	117.00	0.00:	0.00:	8.69:	5.24:
6:	1:	414.00	0.00:	0.00:	8.57:	5.24:
7:	1:	2404.00	0.00:	0.00:	8.44:	5.24:
8:	1:	9789.00	0.00:	0.00:	8.32:	5.24:
9:	1:	62675.00	0.00:	0.00:	8.26:	5.24:

Environmental Crack Growth Check for Sustained Stresses
(Kmax less than Keac): NOT SET

JJ Pin cold launch
MODEL: SC07

FATIGUE SCHEDULE BLOCK STRESS TABLE

VC Magnet cold launch

S T E P	M: A: T: L:	NUMBER OF FATIGUE CYCLES	S0 (ksi) (t1)	(t2)	S1 (ksi) (t1)	(t2)
1:	1:	1.00	0.00:	0.00:	59.22:	2.40:
2:	1:	3.00	0.00:	0.00:	54.29:	2.65:
3:	1:	5.00	0.00:	0.00:	49.30:	2.96:
4:	1:	12.00	0.00:	0.00:	44.37:	3.20:
5:	1:	46.00	0.00:	0.00:	39.44:	3.45:
6:	1:	78.00	0.00:	0.00:	34.45:	3.70:
7:	1:	165.00	0.00:	0.00:	29.52:	3.94:
8:	1:	493.00	0.00:	0.00:	24.59:	4.19:
9:	1:	2229.00	0.00:	0.00:	19.66:	4.44:
10:	1:	2132.00	0.00:	0.00:	14.67:	4.68:
11:	1:	2920.00	0.00:	0.00:	13.19:	4.81:
12:	1:	22272.00	0.00:	0.00:	12.20:	4.81:
13:	1:	82954.00	0.00:	0.00:	11.22:	4.87:

Environmental Crack Growth Check for Sustained Stresses
(Kmax less than Keac): NOT SET

JJ Pin cold launch
MODEL: SC07

ANALYSIS RESULTS:

Schedl	Blk Step	Cycles	Flaw Size a	c	K max a-tip
1	1	1953580.	0.0664	0.0750	6.257 t
1	2	3907160.	0.0664	0.0750	6.257 t
1	3	5860740.	0.0664	0.0750	6.257 t
1	4	7814320.	0.0664	0.0750	6.257 t
1	5	8546056.	0.0664	0.0750	7.348 t
1	6	9277792.	0.0664	0.0750	7.348 t
1	7	10009528.	0.0664	0.0750	7.348 t
1	8	10741264.	0.0664	0.0750	7.348 t
1	9	10816970.	0.0664	0.0750	2.404 t

1	10	10892676.	0.0664	0.0750	2.404 t
1	11	10968392.	0.0664	0.0750	2.404 t
1	12	11044088.	0.0664	0.0750	2.404 t
1	13	11157398.	0.0664	0.0750	16.384 t
1	14	11270708.	0.0664	0.0750	16.387 t
1	15	11384018.	0.0664	0.0751	16.389 t
1	16	11497328.	0.0665	0.0751	16.391 t
1	17	11610638.	0.0665	0.0751	16.393 t
1	18	11723948.	0.0665	0.0751	16.395 t
1	19	11837258.	0.0665	0.0752	16.397 t
1	20	11950568.	0.0665	0.0752	16.400 t
1	21	12063878.	0.0665	0.0752	16.402 t
1	22	12177188.	0.0666	0.0752	16.404 t
1	23	12290498.	0.0666	0.0753	16.406 t
1	24	12403808.	0.0666	0.0753	16.408 t

FINAL RESULTS:
Critical Crack Size has NOT been reached.

at Cycle No. 82954.00
of Load Step No. 13 Description: None
of Block No. 24
of Schedule No. 1
Crack Size a = 0.666018E-01
Total Cycles = 12403808.

t - indicates this step or a step in this block was below threshold
Corresponding semi crack length, c = 0.752838E-01

Prepared By	Name/Date Saike Wang 4/16/02	LOCKHEED MARTIN	Page/Section No. 1	File Name Warmpin_JJ
Checked By	4/16/02	Science, Engineering, Analysis, & Test Mechanical Systems Analysis Department.	Drawing No.	SCD0678
Title	AMS-02 Magnet strap Clevis Pin (Warm) Section J-J			

SC07

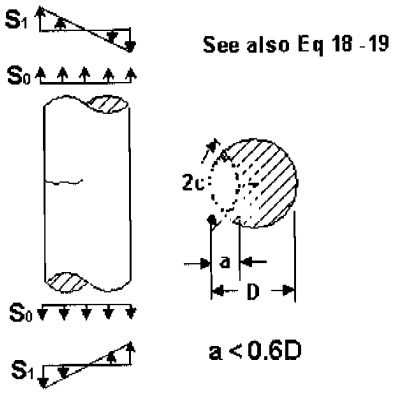

Material: AISI 316LN (75F)
NASA/FLAGRO Crack case type: SC07

Section Properties:

Pin diameter D = 0.5512 in.

Crack Properties:

a = 0.0666 in. (Final crack size from JJ-pin-cold-launch, page 6)

Stress:

Axial Stress S0 = 0.0 ksi
Bending stress S3 = 42.501 ksi (Ref. Sectjj_clevis, pg.12)

Prepared By	Name/Date Saike Wang 4/16/02	LOCKHEED MARTIN	Page/Section No. 2	File Name Warmpin_JJ
Checked By	4/16/02	Science, Engineering, Analysis, & Test Mechanical Systems Analysis Department.	Drawing No.	SCD0678
Title	AMS-02 Magnet Clevis Pin (warm) Section J-J			

This clevis attaches the C1W1 S2 glass strap with a 14 mm diameter pin. (Ref drawing SCD0678, issue 07, section J-J)
This clevis is at room temperature (75F) for Landing conditions. The Flagro analysis uses the Landing case spectrums at room temp.
The material data used is from code F3KA13AB1 from the NASGRO library, except that the UTS and YS are changed as per the material property for the 316LN Hiproof material as per OIE205 Rev.d , page 25.

Landing spectrum is run for 3 missions with a scatter factor of 4. The final crack size from the cold launch case is used as the initial crack size for this analysis.(Ref. JJ-pin-cold-launch, page 6)

FATIGUE CRACK GROWTH ANALYSIS

DATE: 04/08/02 TIME: 14:21:57
(computed: NASGRO Version 3.0.4, Jan 2000.)
U.S. customary units [inches, ksi, ksi sqrt(in)]

PROBLEM TITLE

JJ Pin warm landing for AMS-02 Magnet Straps
(REF. Drg. SCD0678, issue 07, sect JJ)

Crack Growth Model: Non Interaction
Equation/Table : NASGRO Equation

GEOMETRY

MODEL: SC07-Part-circular Surf. crk on cylinder circ. plane.

Cylinder Diameter, D = 0.5512

FLAW SIZE: (User specified)

a (init.) = 0.6660E-01 **(Final crack size, Ref. JJ-pin-cold-launch, page 6)**

MATERIAL

MATL 1: Edited file data ~2211
~2221

Material Header Info.:

Material 1 Data ID: F3KA13AB1
Alloy Description : AISI 316/316L ~2611

Alloy Cond/HT : Ann sht & plt ~262
1
Product Form : ~2631

Environment : ~2641

Specimen Type :
Specimen Orientation :
Specimen Thickness :
Specimen Width :
Specimen Test Frequency :
Data Reference :

Material Properties:

Matl No.	UTS	YS	K1e	K1c	Ak	Bk	Thk	Kc	Keac
1	**127.6**	**108.1**	280.0	200.0				200.0	

Matl No.	Crack Growth Eqn Constants C	n	p	q	DKo	Cth+	Cth-	Rcl	Alpha	Smax/SIGo
1	0.220D-09	3.200	0.25	0.25	3.50	1.50	0.10	0.70	2.50	0.30

(Ref. OIE205, Rev.D for UTS and YS for 316L Hi proof stainless steel)

JJ Pin warm landing
MODEL: SC07

FATIGUE SCHEDULE BLOCK INPUT TABLE

JJ warm landing

[Note: Stress = Input Value * Scale Factor]

Stress Scaling Factors for Block Case: **1** **(LAND-ONLY)**

Scale Factor for Stress S0: 0.0000
Scale Factor for Stress S1: 0.42501 **(Ref. JJ_clevis, page 12)**

Schedule info. was input manually

Total No. of Blocks in Schedule = 12

Block Number and Case Correspondences

Block Number From - To	Block Case No.
1 - 12	1

Stresses: Tension, bending or pin

JJ Pin warm landing
MODEL: SC07

FATIGUE SCHEDULE BLOCK INPUT TABLE

JJ warm landing

SINGLE DISTINCT BLOCK

STEP	MAT	NUMBER OF FATIGUE CYCLES	S0 (t1)	S0 (t2)	S1 (t1)	S1 (t2)
1	1	1.00	100.00	3.70	100.00	3.70
2	1	1.00	91.30	4.20	91.30	4.20
3	1	3.00	82.60	4.70	82.60	4.70
4	1	3.00	74.00	5.20	74.00	5.20
5	1	3.00	65.30	5.70	65.30	5.70
6	1	3.00	56.60	6.10	56.60	6.10
7	1	13.00	47.90	6.60	47.90	6.60
8	1	148.00	39.20	7.10	39.20	7.10
9	1	891.00	30.60	7.60	30.60	7.60
10	1	1273.00	21.90	8.10	21.90	8.10
11	1	2099.00	19.30	8.20	19.30	8.20
12	1	6581.00	17.50	8.30	17.50	8.30
13	1	8701.00	15.80	8.40	15.80	8.40

Environmental Crack Growth Check for Sustained Stresses
(Kmax less than Keac): NOT SET

JJ Pin warm landing
MODEL: SC07

FATIGUE SCHEDULE BLOCK STRESS TABLE

JJ warm landing

S T E P	M: A: T: L:	NUMBER OF FATIGUE CYCLES	S0 (ksi) (t1)	S0 (ksi) (t2)	S1 (ksi) (t1)	S1 (ksi) (t2)
1	1	1.00	0.00	0.00	42.50	1.57
2	1	1.00	0.00	0.00	38.80	1.79
3	1	3.00	0.00	0.00	35.11	2.00
4	1	3.00	0.00	0.00	31.45	2.21
5	1	3.00	0.00	0.00	27.75	2.42
6	1	3.00	0.00	0.00	24.06	2.59
7	1	13.00	0.00	0.00	20.36	2.81
8	1	148.00	0.00	0.00	16.66	3.02
9	1	891.00	0.00	0.00	13.01	3.23
10	1	1273.00	0.00	0.00	9.31	3.44
11	1	2099.00	0.00	0.00	8.20	3.49
12	1	6581.00	0.00	0.00	7.44	3.53
13	1	8701.00	0.00	0.00	6.72	3.57

Environmental Crack Growth Check for Sustained Stresses
(Kmax less than Keac): NOT SET

JJ Pin warm landing
MODEL: SC07

ANALYSIS RESULTS:

Schedl	Blk Step	Cycles	Flaw Size a	Flaw Size c	K max a-tip
1	1	19720.	0.0666	0.0753	11.777 t
1	2	39440.	0.0666	0.0753	11.777 t
1	3	59160.	0.0666	0.0753	11.777 t
1	4	78880.	0.0666	0.0753	11.778 t
1	5	98600.	0.0666	0.0753	11.778 t
1	6	118320.	0.0666	0.0753	11.778 t
1	7	138040.	0.0666	0.0753	11.778 t
1	8	157760.	0.0666	0.0753	11.778 t
1	9	177480.	0.0666	0.0753	11.778 t
1	10	197200.	0.0666	0.0753	11.779 t
1	11	216920.	0.0666	0.0753	11.779 t
1	12	236640.	0.0666	0.0753	11.779 t

FINAL RESULTS:
Critical Crack Size has NOT been reached.

at Cycle No. 8701.00
of Load Step No. 13 Description: None
of Block No. 12
of Schedule No. 1
Crack Size a = 0.666253E-01
Total Cycles = 236640.00

t - indicates this step or a step in this block was below threshold
Corresponding semi crack length, c = 0.753136E-01

Prepared By	Name/Date Saike Wang 4/16/02	LOCKHEED MARTIN	Page/Section No. 1	File Name Cryopin_kk
Checked By	4/16/02	Science, Engineering, Analysis, & Test Mechanical Systems Analysis Department.	Drawing No.	SCD0678
Title	AMS-02 Magnet strap Clevis Pin (Cryo) Section K-K.			

SC07

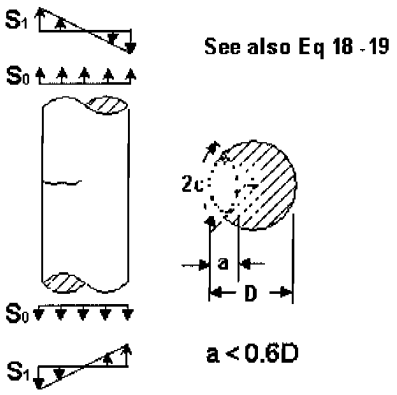

Material: AISI 316LN (-452F)
NASA/FLAGRO Crack case type: SC07

Section Properties:

Pin diameter D = 0.5512 in.

Crack Properties:

a = 0.06638 in.(dye penetrant)

Stress:

Axial Stress S0 = 0.0 ksi
Bending stress S3 = 52.104 ksi (ref. Sectkk_clevis, pg.12)

Prepared By	Name/Date Saike Wang 4/16/02	LOCKHEED MARTIN	Page/Section No. 2	File Name Cryopin_kk
Checked By	4/16/02	Science, Engineering, Analysis, & Test *Mechanical Systems Analysis Department.*	Drawing No.	SCD0678
Title	AMS-02 Magnet Clevis Pin (Cryo) Section K-K			

This clevis attaches the C1W1 S2 glass strap with a 14 mm diameter pin. (Ref drawing SCD0678, issue 07, section k-k)
This clevis is at cryogenic temperature (-452F) for Truck transportation, Air transportation, On - Orbit condition and Launch/Landing conditions. The Flagro analysis uses the truck, Air, On-Orbit and Launch/Landing case spectrums at cryo temp.
The material data used is from code F3KA13LA2 from the NASGRO library, except that the UTS and YS are changed as per the material property for the 316LN Hiproof material as per OIE205 Rev.d , page 25.

The truck, air, on orbit spectrums are run for 1 mission with a scatter factor of 4 and the Launch/Landing spectrum is run for 3 missions with a scatter factor of 4. Dye penetrant inspection is used to inspect the pin, and the standard dye penetrant crack size c = 0.075 in. is used. (Ref. JSC22267A, table 2).

FATIGUE CRACK GROWTH ANALYSIS

DATE: 04/08/02 TIME: 15:03:13
(computed: NASGRO Version 3.0.4, Jan 2000.)
U.S. customary units [inches, ksi, ksi sqrt(in)]

PROBLEM TITLE

KK Pin cold launch and Landing for AMS-02 Magnet Straps (Ref. Drg. SCD0678, issue 07, sect K-K)

Crack Growth Model: Non Interaction
Equation/Table : NASGRO Equation

GEOMETRY

MODEL: SC07-Part-circular Surf. crk on cylinder circ. plane.

Cylinder Diameter, D = 0.5512

FLAW SIZE (Standard NASA JSC NDE):
Method of Inspection: Dye Penetrant

a (init.) = 0.6638E-01

MATERIAL

MATL 1: Edited file data ~2211
~2221

Material Header Info.:

Material 1 Data ID: F3KA13LA2
Alloy Description : AISI 316/316L ~2611

Alloy Cond/HT : Ann sht & plt ; -452F LHe
~2621
Product Form : ~2631

Environment : ~2641

Specimen Type :
Specimen Orientation :
Specimen Thickness :
Specimen Width :
Specimen Test Frequency :
Data Reference :

Material Properties:

Matl No.	UTS	YS	K1e	K1c	Ak	Bk	Thk	Kc	Keac
1	**203.1**	**162.5**	280.0	200.0				200.0	

Matl No.	Crack Growth Eqn Constants								
	C	n	p	q	DKo	Cth+	Cth-	Rcl	Alpha	Smax/SIGo

1	0.220D-09	3.200	0.25	0.25	8.00	1.50	0.10	0.70	2.50	0.30

(Ref. OIE205, Rev.D for UTS and YS for 316L Hi proof stainless steel)

KK Pin aal cold
MODEL: SC07

FATIGUE SCHEDULE BLOCK INPUT TABLE

KK pin all cold

[Note: Stress = Input Value * Scale Factor]

Stress Scaling Factors for Block Case: **1** **(TRUCK3-VCMAGNET)**

Scale Factor for Stress S0: 0.0000
Scale Factor for Stress S1: 0.52104 **(Ref. Sectkk_clevis, page 12)**

Stress Scaling Factors for Block Case: **2** **(AIR3-VCMAGNET)**

Scale Factor for Stress S0: 0.0000
Scale Factor for Stress S1: 0.52104

Stress Scaling Factors for Block Case: **3** **(ONORBIT2-VCMAGNET)**

Scale Factor for Stress S0: 0.0000
Scale Factor for Stress S1: 0.52104

Stress Scaling Factors for Block Case: **4** **(GSFC-VCMAGNET)**

Scale Factor for Stress S0: 0.0000
Scale Factor for Stress S1: 0.52104

Schedule info. was input manually

Total No. of Blocks in Schedule = 24

Block Number and Case Correspondences

Block Number From	-	To	Block Case No.
1	-	4	1
5	-	8	2
9	-	12	3
13	-	24	4

Stresses: Tension, bending or pin

KK Pin aal cold
MODEL: SC07

FATIGUE SCHEDULE BLOCK INPUT TABLE

KK pin all cold

BLOCK CASE NO. 1

S T E P	M: A: T: L:	NUMBER OF FATIGUE CYCLES	S0 (t1)	S0 (t2)	S1 (t1)	S1 (t2)

1:	1:	1757.00 :	36.70:	5.60:	36.70:	5.60:
2:	1:	2148.00 :	30.10:	6.40:	30.10:	6.40:
3:	1:	13668.00 :	25.50:	6.90:	25.50:	6.90:
4:	1:	38857.00 :	21.90:	7.30:	21.90:	7.30:
5:	1:	110517.00 :	19.50:	7.50:	19.50:	7.50:
6:	1:	150546.00 :	17.80:	7.70:	17.80:	7.70:
7:	1:	195456.00 :	16.50:	7.90:	16.50:	7.90:
8:	1:	1440631.00 :	15.90:	7.90:	15.90:	7.90:

Environmental Crack Growth Check for Sustained Stresses
(Kmax less than Keac): NOT SET

BLOCK CASE NO. 2

S T E P	M: A: T: L:	NUMBER OF FATIGUE CYCLES	S0 (t1)	S0 (t2)	S1 (t1)	S1 (t2)
1:	1:	17832.00 :	43.10:	4.90:	43.10:	4.90:
2:	1:	594.00 :	43.10:	4.90:	43.10:	4.90:
3:	1:	695448.00 :	22.60:	7.20:	22.60:	7.20:
4:	1:	30.00 :	43.10:	4.90:	43.10:	4.90:
5:	1:	17832.00 :	43.10:	4.90:	43.10:	4.90:

Environmental Crack Growth Check for Sustained Stresses
(Kmax less than Keac): NOT SET

BLOCK CASE NO. 3

S T E P	M: A: T: L:	NUMBER OF FATIGUE CYCLES	S0 (t1)	S0 (t2)	S1 (t1)	S1 (t2)
1:	1:	34.00 :	14.10:	8.50:	14.10:	8.50:
2:	1:	34.00 :	13.90:	8.50:	13.90:	8.50:
3:	1:	60.00 :	13.70:	8.50:	13.70:	8.50:
4:	1:	179.00 :	13.50:	8.50:	13.50:	8.50:
5:	1:	117.00 :	14.10:	8.50:	14.10:	8.50:
6:	1:	414.00 :	13.90:	8.50:	13.90:	8.50:
7:	1:	2404.00 :	13.70:	8.50:	13.70:	8.50:
8:	1:	9789.00 :	13.50:	8.50:	13.50:	8.50:
9:	1:	62675.00 :	13.40:	8.50:	13.40:	8.50:

Environmental Crack Growth Check for Sustained Stresses
(Kmax less than Keac): NOT SET

BLOCK CASE NO. 4

S T E P	M: A: T: L:	NUMBER OF FATIGUE CYCLES	S0 (t1)	S0 (t2)	S1 (t1)	S1 (t2)
1:	1:	2.00 :	96.10:	3.90:	96.10:	3.90:
2:	1:	4.00 :	88.10:	4.30:	88.10:	4.30:
3:	1:	8.00 :	80.00:	4.80:	80.00:	4.80:
4:	1:	15.00 :	72.00:	5.20:	72.00:	5.20:
5:	1:	49.00 :	64.00:	5.60:	64.00:	5.60:

6:	1:	81.00 :	55.90:	6.00:	55.90:	6.00:
7:	1:	178.00 :	47.90:	6.40:	47.90:	6.40:
8:	1:	641.00 :	39.90:	6.80:	39.90:	6.80:
9:	1:	3120.00 :	31.90:	7.20:	31.90:	7.20:
10:	1:	3405.00 :	23.80:	7.60:	23.80:	7.60:
11:	1:	5019.00 :	21.40:	7.80:	21.40:	7.80:
12:	1:	28853.00 :	19.80:	7.80:	19.80:	7.80:
13:	1:	91655.00 :	18.20:	7.90:	18.20:	7.90:

Environmental Crack Growth Check for Sustained Stresses
(Kmax less than Keac): NOT SET

KK Pin aal cold
MODEL: SC07

FATIGUE SCHEDULE BLOCK STRESS TABLE

KK pin all cold

S T E P	M: A: T: L:	NUMBER OF FATIGUE CYCLES	S0 (ksi) (t1)	S0 (ksi) (t2)	S1 (ksi) (t1)	S1 (ksi) (t2)
1:	1:	1757.00 :	0.00:	0.00:	19.12:	2.92:
2:	1:	2148.00 :	0.00:	0.00:	15.68:	3.33:
3:	1:	13668.00 :	0.00:	0.00:	13.29:	3.60:
4:	1:	38857.00 :	0.00:	0.00:	11.41:	3.80:
5:	1:	110517.00 :	0.00:	0.00:	10.16:	3.91:
6:	1:	150546.00 :	0.00:	0.00:	9.27:	4.01:
7:	1:	195456.00 :	0.00:	0.00:	8.60:	4.12:
8:	1:	1440631.00 :	0.00:	0.00:	8.28:	4.12:

Environmental Crack Growth Check for Sustained Stresses
(Kmax less than Keac): NOT SET

KK Pin aal cold
MODEL: SC07

FATIGUE SCHEDULE BLOCK STRESS TABLE

KK pin all cold

S T E P	M: A: T: L:	NUMBER OF FATIGUE CYCLES	S0 (ksi) (t1)	S0 (ksi) (t2)	S1 (ksi) (t1)	S1 (ksi) (t2)
1:	1:	17832.00 :	0.00:	0.00:	22.46:	2.55:
2:	1:	594.00 :	0.00:	0.00:	22.46:	2.55:
3:	1:	695448.00 :	0.00:	0.00:	11.78:	3.75:
4:	1:	30.00 :	0.00:	0.00:	22.46:	2.55:
5:	1:	17832.00 :	0.00:	0.00:	22.46:	2.55:

Environmental Crack Growth Check for Sustained Stresses
(Kmax less than Keac): NOT SET

KK Pin aal cold
MODEL: SC07

FATIGUE SCHEDULE BLOCK STRESS TABLE

KK pin all cold

STEP	MAT	NUMBER OF FATIGUE CYCLES	S0 (ksi) (t1)	S0 (ksi) (t2)	S1 (ksi) (t1)	S1 (ksi) (t2)
1	1	34.00	0.00	0.00	7.35	4.43
2	1	34.00	0.00	0.00	7.24	4.43
3	1	60.00	0.00	0.00	7.14	4.43
4	1	179.00	0.00	0.00	7.03	4.43
5	1	117.00	0.00	0.00	7.35	4.43
6	1	414.00	0.00	0.00	7.24	4.43
7	1	2404.00	0.00	0.00	7.14	4.43
8	1	9789.00	0.00	0.00	7.03	4.43
9	1	62675.00	0.00	0.00	6.98	4.43

Environmental Crack Growth Check for Sustained Stresses
(Kmax less than Keac): NOT SET

KK Pin aal cold
MODEL: SC07

FATIGUE SCHEDULE BLOCK STRESS TABLE

KK pin all cold

STEP	MAT	NUMBER OF FATIGUE CYCLES	S0 (ksi) (t1)	S0 (ksi) (t2)	S1 (ksi) (t1)	S1 (ksi) (t2)
1	1	2.00	0.00	0.00	50.07	2.03
2	1	4.00	0.00	0.00	45.90	2.24
3	1	8.00	0.00	0.00	41.68	2.50
4	1	15.00	0.00	0.00	37.51	2.71
5	1	49.00	0.00	0.00	33.35	2.92
6	1	81.00	0.00	0.00	29.13	3.13
7	1	178.00	0.00	0.00	24.96	3.33
8	1	641.00	0.00	0.00	20.79	3.54
9	1	3120.00	0.00	0.00	16.62	3.75
10	1	3405.00	0.00	0.00	12.40	3.96
11	1	5019.00	0.00	0.00	11.15	4.06
12	1	28853.00	0.00	0.00	10.32	4.06
13	1	91655.00	0.00	0.00	9.48	4.12

Environmental Crack Growth Check for Sustained Stresses
(Kmax less than Keac): NOT SET

KK Pin aal cold
MODEL: SC07

ANALYSIS RESULTS:

Schedl	Blk Step	Cycles	Flaw Size a	Flaw Size c	K max a-tip
1	1	1953580.	0.0664	0.0750	5.290 t
1	2	3907160.	0.0664	0.0750	5.290 t
1	3	5860740.	0.0664	0.0750	5.290 t
1	4	7814320.	0.0664	0.0750	5.290 t
1	5	8546056.	0.0664	0.0750	6.213 t
1	6	9277792.	0.0664	0.0750	6.213 t
1	7	10009528.	0.0664	0.0750	6.213 t

1	8	10741264.	0.0664	0.0750	6.213 t
1	9	10816970.	0.0664	0.0750	2.033 t
1	10	10892676.	0.0664	0.0750	2.033 t
1	11	10968382.	0.0664	0.0750	2.033 t
1	12	11044088.	0.0664	0.0750	2.033 t
1	13	11177118.	0.0664	0.0750	13.853 t
1	14	11310148.	0.0664	0.0750	13.854 t
1	15	11443178.	0.0664	0.0750	13.855 t
1	16	11576208.	0.0664	0.0750	13.856 t
1	17	11709238.	0.0664	0.0751	13.856 t
1	18	11842268.	0.0664	0.0751	13.857 t
1	19	11975298.	0.0664	0.0751	13.858 t
1	20	12108328.	0.0664	0.0751	13.859 t
1	21	12241358.	0.0665	0.0751	13.860 t
1	22	12374388.	0.0665	0.0751	13.860 t
1	23	12507418.	0.0665	0.0751	13.861 t
1	24	12640448.	0.0665	0.0751	13.862 t

FINAL RESULTS:
Critical Crack Size has NOT been reached.

at Cycle No. 91655.00
of Load Step No. 13 Description: None
of Block No. 24
of Schedule No. 1
Crack Size a = 0.664741E-01
Total Cycles = 12640448.

t - indicates this step or a step in this block was below threshold
Corresponding semi crack length, c = 0.751216E-01

Prepared By	Name/Date Saika wang 4/16/02	LOCKHEED MARTIN Science, Engineering, Analysis, & Test *Mechanical Systems Analysis Department.*	Page/Section No. 1	File Name Coldpin_kk
Checked By	4/16/02		Drawing No.	
Title	AMS-02 Magnet strap Clevis (Cold) Section K-K			

SC07

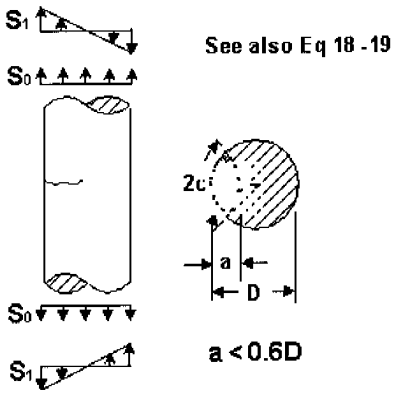

Material: AISI 316LN (-452F)
NASA/FLAGRO Crack case type: SC07

Section Properties:

Pin diameter D = 0.5512 in.

Crack Properties:

a = 0.06638 in.(dye penetrant)

Stress:

Axial Stress S0 = 0.0 ksi
Bending stress S3 = 52.104 ksi (ref. sectkk_clevis, pg.12)

Prepared By	Name/Date Saika Wang 4/16/02	LOCKHEED MARTIN	Page/Section No. 2	File Name Coldpin_kk
Checked By	4/16/02	Science, Engineering, Analysis, & Test Mechanical Systems Analysis Department.	Drawing No.	
Title	AMS-02 Magnet strap Clevis Pin (Cold) section K-K			

This clevis attaches the C1W1 S2 glass strap with a 14 mm diameter pin. (Ref drawing SCD0678, issue 07, section K-K)
This pin is at cryogenic temperature (-452F) for Truck transportation, Air transportation, Launch and On - Orbit conditions. The Flagro analysis uses the truck, Air, On-Orbit and Launch case spectrums at cryo temp.
The material data used is from code F3KA13LA2 from the NASGRO library, except that the UTS and YS are changed as per the material property for the 316LN Hiproof material as per OIE205 Rev.d , page 25.

The truck, air, on orbit spectrums are run for 1 mission with a scatter factor of 4 and the Launch spectrum is run for 3 missions with a scatter factor of 4. The final crack from this run is used as the initial crack size for the analysis for the warm landing case.

Dye penetrant inspection is used to inspect the pin and the standard dye penetrant crack size c = 0.075 in. is used (Ref. JSC22267A, table 2)

FATIGUE CRACK GROWTH ANALYSIS

DATE: 04/08/02 TIME: 15:12:46
(computed: NASGRO Version 3.0.4, Jan 2000.)
U.S. customary units [inches, ksi, ksi sqrt(in)]

PROBLEM TITLE

KK Pin cold launch for AMS-02 Magnet straps
(Ref. SCD0678, issue 07, sect K-K)

Crack Growth Model: Non Interaction
Equation/Table : NASGRO Equation

GEOMETRY

MODEL: SC07-Part-circular Surf. crk on cylinder circ. plane.

Cylinder Diameter, D = 0.5512

FLAW SIZE (Standard NASA JSC NDE):
Method of Inspection: Dye Penetrant

a (init.) = 0.6638E-01

MATERIAL

MATL 1: Edited file data ~2211
~2221

Material Header Info.:

Material 1 Data ID: F3KA13LA2
Alloy Description : AISI 316/316L ~2611

Alloy Cond/HT : Ann sht & plt ; -452F LHe
~2621
Product Form : ~2631

Environment : ~2641

Specimen Type :
Specimen Orientation :
Specimen Thickness :
Specimen Width :
Specimen Test Frequency :
Data Reference :

Material Properties:

Matl No.	UTS	YS	K1e	K1c	Ak	Bk	Thk	Kc	Keac
1	**203.1**	**162.5**	280.0	200.0				200.0	

Matl No.	Crack Growth Eqn Constants C	n	p	q	DKo	Cth+	Cth-	Rcl	Alpha	Smax/SIGo
1	0.220D-09	3.200	0.25	0.25	8.00	1.50	0.10	0.70	2.50	0.30

(Ref. OIE205, Rev.D for UTS and YS for 316L Hi proof stainless steel)

KK Pin cold launch
MODEL: SC07

FATIGUE SCHEDULE BLOCK INPUT TABLE

KK pin cold launch

[Note: Stress = Input Value * Scale Factor]

Stress Scaling Factors for Block Case: **1** **(TRUCK3-VCMAGNET)**

Scale Factor for Stress S0: 0.0000
Scale Factor for Stress S1: 0.52104 **(Ref. Sectkk_clevis, page 12)**

Stress Scaling Factors for Block Case: **2** **(AIR3-VCMAGNET)**

Scale Factor for Stress S0: 0.0000
Scale Factor for Stress S1: 0.52104

Stress Scaling Factors for Block Case: **3** **(ONORBIT2-VCMAGNET)**

Scale Factor for Stress S0: 0.0000
Scale Factor for Stress S1: 0.52104

Stress Scaling Factors for Block Case: **4** **(LIFTOFF-ONLY)**

Scale Factor for Stress S0: 0.0000
Scale Factor for Stress S1: 0.52104

Schedule info. was input manually

Total No. of Blocks in Schedule = 24

Block Number and Case Correspondences

Block Number From	-	To	Block Case No.
1	-	4	1
5	-	8	2
9	-	12	3
13	-	24	4

Stresses: Tension, bending or pin

KK Pin cold launch
MODEL: SC07

FATIGUE SCHEDULE BLOCK INPUT TABLE

KK pin cold launch

BLOCK CASE NO. 1

STEP	MAT	NUMBER OF FATIGUE CYCLES	S0 (t1)	S0 (t2)	S1 (t1)	S1 (t2)
1	1	1757.00	36.70	5.60	36.70	5.60
2	1	2148.00	30.10	6.40	30.10	6.40
3	1	13668.00	25.50	6.90	25.50	6.90

4:	1:	38857.00 :	21.90:	7.30:	21.90:	7.30:
5:	1:	110517.00 :	19.50:	7.50:	19.50:	7.50:
6:	1:	150546.00 :	17.80:	7.70:	17.80:	7.70:
7:	1:	195456.00 :	16.50:	7.90:	16.50:	7.90:
8:	1:	1440631.00 :	15.90:	7.90:	15.90:	7.90:

Environmental Crack Growth Check for Sustained Stresses
(Kmax less than Keac): NOT SET

BLOCK CASE NO. 2

S T E P	M: A: T: L:	NUMBER OF FATIGUE CYCLES	S0 (t1)	S0 (t2)	S1 (t1)	S1 (t2)
1:	1:	17832.00 :	43.10:	4.90:	43.10:	4.90:
2:	1:	594.00 :	43.10:	4.90:	43.10:	4.90:
3:	1:	695448.00 :	22.60:	7.20:	22.60:	7.20:
4:	1:	30.00 :	43.10:	4.90:	43.10:	4.90:
5:	1:	17832.00 :	43.10:	4.90:	43.10:	4.90:

Environmental Crack Growth Check for Sustained Stresses
(Kmax less than Keac): NOT SET

BLOCK CASE NO. 3

S T E P	M: A: T: L:	NUMBER OF FATIGUE CYCLES	S0 (t1)	S0 (t2)	S1 (t1)	S1 (t2)
1:	1:	34.00 :	14.10:	8.50:	14.10:	8.50:
2:	1:	34.00 :	13.90:	8.50:	13.90:	8.50:
3:	1:	60.00 :	13.70:	8.50:	13.70:	8.50:
4:	1:	179.00 :	13.50:	8.50:	13.50:	8.50:
5:	1:	117.00 :	14.10:	8.50:	14.10:	8.50:
6:	1:	414.00 :	13.90:	8.50:	13.90:	8.50:
7:	1:	2404.00 :	13.70:	8.50:	13.70:	8.50:
8:	1:	9789.00 :	13.50:	8.50:	13.50:	8.50:
9:	1:	62675.00 :	13.40:	8.50:	13.40:	8.50:

Environmental Crack Growth Check for Sustained Stresses
(Kmax less than Keac): NOT SET

BLOCK CASE NO. 4

S T E P	M: A: T: L:	NUMBER OF FATIGUE CYCLES	S0 (t1)	S0 (t2)	S1 (t1)	S1 (t2)
1:	1:	1.00 :	96.10:	3.90:	96.10:	3.90:
2:	1:	3.00 :	88.10:	4.30:	88.10:	4.30:
3:	1:	5.00 :	80.00:	4.80:	80.00:	4.80:
4:	1:	12.00 :	72.00:	5.20:	72.00:	5.20:
5:	1:	46.00 :	64.00:	5.60:	64.00:	5.60:
6:	1:	78.00 :	55.90:	6.00:	55.90:	6.00:
7:	1:	165.00 :	47.90:	6.40:	47.90:	6.40:
8:	1:	493.00 :	39.90:	6.80:	39.90:	6.80:
9:	1:	2229.00 :	31.90:	7.20:	31.90:	7.20:

10:	1:	2132.00 :	23.80:	7.60:	23.80:	7.60:
11:	1:	2920.00 :	21.40:	7.80:	21.40:	7.80:
12:	1:	22272.00 :	19.80:	7.80:	19.80:	7.80:
13:	1:	82954.00 :	18.20:	7.90:	18.20:	7.90:

Environmental Crack Growth Check for Sustained Stresses
(Kmax less than Keac): NOT SET

KK Pin cold launch
MODEL: SC07

FATIGUE SCHEDULE BLOCK STRESS TABLE

KK pin cold launch

S	M:	NUMBER	S0		S1	
T	A:	OF				
E	T:	FATIGUE	(ksi)		(ksi)	
P	L:	CYCLES	(t1) :	(t2)	(t1) :	(t2)
1:	1:	1757.00 :	0.00:	0.00:	19.12:	2.92:
2:	1:	2148.00 :	0.00:	0.00:	15.68:	3.33:
3:	1:	13668.00 :	0.00:	0.00:	13.29:	3.60:
4:	1:	38857.00 :	0.00:	0.00:	11.41:	3.80:
5:	1:	110517.00 :	0.00:	0.00:	10.16:	3.91:
6:	1:	150546.00 :	0.00:	0.00:	9.27:	4.01:
7:	1:	195456.00 :	0.00:	0.00:	8.60:	4.12:
8:	1:	1440631.00 :	0.00:	0.00:	8.28:	4.12:

Environmental Crack Growth Check for Sustained Stresses
(Kmax less than Keac): NOT SET

KK Pin cold launch
MODEL: SC07

FATIGUE SCHEDULE BLOCK STRESS TABLE

KK pin cold launch

S	M:	NUMBER	S0		S1	
T	A:	OF				
E	T:	FATIGUE	(ksi)		(ksi)	
P	L:	CYCLES	(t1) :	(t2)	(t1) :	(t2)
1:	1:	17832.00 :	0.00:	0.00:	22.46:	2.55:
2:	1:	594.00 :	0.00:	0.00:	22.46:	2.55:
3:	1:	695448.00 :	0.00:	0.00:	11.78:	3.75:
4:	1:	30.00 :	0.00:	0.00:	22.46:	2.55:
5:	1:	17832.00 :	0.00:	0.00:	22.46:	2.55:

Environmental Crack Growth Check for Sustained Stresses
(Kmax less than Keac): NOT SET

KK Pin cold launch
MODEL: SC07

FATIGUE SCHEDULE BLOCK STRESS TABLE

KK pin cold launch

S	M:	NUMBER	S0		S1	
T	A:	OF				
E	T:	FATIGUE	(ksi)		(ksi)	
P	L:	CYCLES	(t1) :	(t2)	(t1) :	(t2)

1:	1:	34.00	0.00:	0.00:	7.35:	4.43:
2:	1:	34.00	0.00:	0.00:	7.24:	4.43:
3:	1:	60.00	0.00:	0.00:	7.14:	4.43:
4:	1:	179.00	0.00:	0.00:	7.03:	4.43:
5:	1:	117.00	0.00:	0.00:	7.35:	4.43:
6:	1:	414.00	0.00:	0.00:	7.24:	4.43:
7:	1:	2404.00	0.00:	0.00:	7.14:	4.43:
8:	1:	9789.00	0.00:	0.00:	7.03:	4.43:
9:	1:	62675.00	0.00:	0.00:	6.98:	4.43:

Environmental Crack Growth Check for Sustained Stresses
(Kmax less than Keac): NOT SET

KK Pin cold launch
MODEL: SC07

FATIGUE SCHEDULE BLOCK STRESS TABLE

KK pin cold launch

S T E P	M: A: T: L:	NUMBER OF FATIGUE CYCLES	S0 (ksi) (t1)	S0 (ksi) (t2)	S1 (ksi) (t1)	S1 (ksi) (t2)
1:	1:	1.00	0.00:	0.00:	50.07:	2.03:
2:	1:	3.00	0.00:	0.00:	45.90:	2.24:
3:	1:	5.00	0.00:	0.00:	41.68:	2.50:
4:	1:	12.00	0.00:	0.00:	37.51:	2.71:
5:	1:	46.00	0.00:	0.00:	33.35:	2.92:
6:	1:	78.00	0.00:	0.00:	29.13:	3.13:
7:	1:	165.00	0.00:	0.00:	24.96:	3.33:
8:	1:	493.00	0.00:	0.00:	20.79:	3.54:
9:	1:	2229.00	0.00:	0.00:	16.62:	3.75:
10:	1:	2132.00	0.00:	0.00:	12.40:	3.96:
11:	1:	2920.00	0.00:	0.00:	11.15:	4.06:
12:	1:	22272.00	0.00:	0.00:	10.32:	4.06:
13:	1:	82954.00	0.00:	0.00:	9.48:	4.12:

Environmental Crack Growth Check for Sustained Stresses
(Kmax less than Keac): NOT SET

KK Pin cold launch
MODEL: SC07

ANALYSIS RESULTS:

Schedl	Blk Step	Cycles	Flaw Size a	Flaw Size c	K max a-tip
1	1	1953580.	0.0664	0.0750	5.290 t
1	2	3907160.	0.0664	0.0750	5.290 t
1	3	5860740.	0.0664	0.0750	5.290 t
1	4	7814320.	0.0664	0.0750	5.290 t
1	5	8546056.	0.0664	0.0750	6.213 t
1	6	9277792.	0.0664	0.0750	6.213 t
1	7	10009528.	0.0664	0.0750	6.213 t
1	8	10741264.	0.0664	0.0750	6.213 t
1	9	10816970.	0.0664	0.0750	2.033 t
1	10	10892676.	0.0664	0.0750	2.033 t
1	11	10968382.	0.0664	0.0750	2.033 t

1	12	11044088.	0.0664	0.0750	2.033 t
1	13	11157398.	0.0664	0.0750	13.853 t
1	14	11270708.	0.0664	0.0750	13.854 t
1	15	11384018.	0.0664	0.0750	13.855 t
1	16	11497328.	0.0664	0.0750	13.855 t
1	17	11610638.	0.0664	0.0750	13.856 t
1	18	11723948.	0.0664	0.0750	13.856 t
1	19	11837258.	0.0664	0.0751	13.857 t
1	20	11950568.	0.0664	0.0751	13.858 t
1	21	12063878.	0.0664	0.0751	13.858 t
1	22	12177188.	0.0664	0.0751	13.859 t
1	23	12290498.	0.0665	0.0751	13.860 t
1	24	12403808.	0.0665	0.0751	13.860 t

FINAL RESULTS:
Critical Crack Size has NOT been reached.

at Cycle No. 82954.00
of Load Step No. 13 Description: None
of Block No. 24
of Schedule No. 1
Crack Size a = 0.664570E-01
Total Cycles = 12403808.

t - indicates this step or a step in this block was below threshold
Corresponding semi crack length, c = 0.750999E-01

Prepared By	Name/Date Saike Wang 4/26/02	LOCKHEED MARTIN Science, Engineering, Analysis, & Test Mechanical Systems Analysis Department.	Page/Section No. 1	File Name Warmpin_kk
Checked By	4/26/02		Drawing No.	SCD0678
Title	AMS-02 Magnet strap Clevis Pin (Warm) Section K-K			

SC07

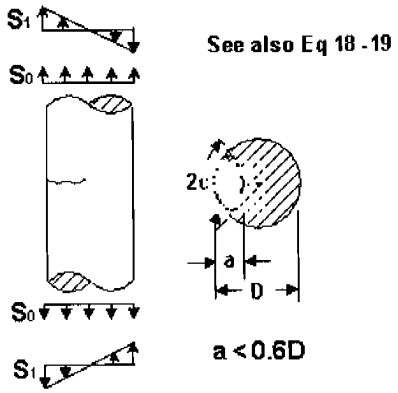

Material: AISI 316LN (75F)
NASA/FLAGRO Crack case type: SC07

Section Properties:

Pin diameter D = 0.5512 in.

Crack Properties:

a = 0.0665 in. (Final crack size from kk-pin-cold-launch, page 6)

Stress:

Axial Stress S0 = 0.0 ksi
Bending stress S3 = 35.935 ksi (Ref. Sectkk_clevis, pg.12)

Prepared By	Name/Date Saike Wang 4/26/02	LOCKHEED MARTIN	Page/Section No. 2	File Name Warmpin_kk
Checked By	4/26/02	Science, Engineering, Analysis, & Test Mechanical Systems Analysis Department.	Drawing No.	SCD0678
Title	AMS-02 Magnet Clevis Pin (warm) Section K-K			

This clevis attaches the C1W1 S2 glass strap with a 14 mm diameter pin. (Ref drawing SCD0678, issue 07, section K-K)
This clevis is at room temperature (75F) for Landing conditions. The Flagro analysis uses the Landing case spectrums at room temp.
The material data used is from code F3KA13AB1 from the NASGRO library, except that the UTS and YS are changed as per the material property for the 316LN Hiproof material as per OIE205 Rev.d , page 25.

Landing spectrum is run for 3 missions with a scatter factor of 4. The final crack size from the cold launch case is used as the initial crack size for this analysis.(Ref. kk-pin-cold-launch, page 6)

FATIGUE CRACK GROWTH ANALYSIS

DATE: 04/08/02 TIME: 15:22:19
(computed: NASGRO Version 3.0.4, Jan 2000.)
U.S. customary units [inches, ksi, ksi sqrt(in)]

PROBLEM TITLE

KK Pin warm landing for AMS-02 Magnet Straps
(Ref. Drg SCD0678, issue 07)

Crack Growth Model: Non Interaction
Equation/Table : NASGRO Equation

GEOMETRY

MODEL: SC07-Part-circular Surf. crk on cylinder circ. plane.

Cylinder Diameter, D = 0.5512

FLAW SIZE: (User specified)

a (init.) = 0.6650E-01 **(Final crack size from KK-pin-cold-launch, page 6)**

MATERIAL

MATL 1: Edited file data ~2211
~2221

Material Header Info.:

Material 1 Data ID: F3KA13AB1
Alloy Description : AISI 316/316L ~2611

Alloy Cond/HT : Ann sht & plt ~262
1
Product Form : ~2631

Environment : ~2641

Specimen Type :
Specimen Orientation :
Specimen Thickness :
Specimen Width :
Specimen Test Frequency :
Data Reference :

Material Properties:

Matl: No.	UTS	YS	K1e	K1c	Ak	Bk	Thk	Kc	Keac
1	**127.6**	**108.1**	280.0	200.0				200.0	

Matl: No.	Crack Growth Eqn Constants C	n	p	q	DKo	Cth+	Cth-	Rcl	Alpha	Smax/SIGo
1	0.220D-09	3.200	0.25	0.25	3.50	1.50	0.10	0.70	2.50	0.30

(Ref. OIE205, Rev.D for UTS and YS for 316L Hi proof stainless steel)

KK Pin warm landing
MODEL: SC07

FATIGUE SCHEDULE BLOCK INPUT TABLE

KK pin warm landing

[Note: Stress = Input Value * Scale Factor]

Stress Scaling Factors for Block Case: **1**

Scale Factor for Stress S0: 0.0000
Scale Factor for Stress S1: 0.35935 **(Ref. Sectkk_clevis, page 12)**

Schedule info. was input manually

Total No. of Blocks in Schedule = 12

Block Number and Case Correspondences

Block Number From - To	Block Case No.
1 - 12	1

Stresses: Tension, bending or pin

KK Pin warm landing
MODEL: SC07

FATIGUE SCHEDULE BLOCK INPUT TABLE

KK pin warm landing

SINGLE DISTINCT BLOCK

STEP	MAT	NUMBER OF FATIGUE CYCLES	S0 (t1)	S0 (t2)	S1 (t1)	S1 (t2)
1:	1:	1.00 :	100.00:	3.70:	100.00:	3.70:
2:	1:	1.00 :	91.30:	4.20:	91.30:	4.20:
3:	1:	3.00 :	82.60:	4.70:	82.60:	4.70:
4:	1:	3.00 :	74.00:	5.20:	74.00:	5.20:
5:	1:	3.00 :	65.30:	5.70:	65.30:	5.70:
6:	1:	3.00 :	56.60:	6.10:	56.60:	6.10:
7:	1:	13.00 :	47.90:	6.60:	47.90:	6.60:
8:	1:	148.00 :	39.20:	7.10:	39.20:	7.10:
9:	1:	891.00 :	30.60:	7.60:	30.60:	7.60:
10:	1:	1273.00 :	21.90:	8.10:	21.90:	8.10:
11:	1:	2099.00 :	19.30:	8.20:	19.30:	8.20:
12:	1:	6581.00 :	17.50:	8.30:	17.50:	8.30:
13:	1:	8701.00 :	15.80:	8.40:	15.80:	8.40:

Environmental Crack Growth Check for Sustained Stresses
(Kmax less than Keac): NOT SET

KK Pin warm landing
MODEL: SC07

FATIGUE SCHEDULE BLOCK STRESS TABLE

KK pin warm landing

STEP	MAT	NUMBER OF FATIGUE CYCLES	S0 (ksi) (t1)	S0 (ksi) (t2)	S1 (ksi) (t1)	S1 (ksi) (t2)
1	1	1.00	0.00	0.00	35.94	1.33
2	1	1.00	0.00	0.00	32.81	1.51
3	1	3.00	0.00	0.00	29.68	1.69
4	1	3.00	0.00	0.00	26.59	1.87
5	1	3.00	0.00	0.00	23.47	2.05
6	1	3.00	0.00	0.00	20.34	2.19
7	1	13.00	0.00	0.00	17.21	2.37
8	1	148.00	0.00	0.00	14.09	2.55
9	1	891.00	0.00	0.00	11.00	2.73
10	1	1273.00	0.00	0.00	7.87	2.91
11	1	2099.00	0.00	0.00	6.94	2.95
12	1	6581.00	0.00	0.00	6.29	2.98
13	1	8701.00	0.00	0.00	5.68	3.02

Environmental Crack Growth Check for Sustained Stresses
(Kmax less than Keac): NOT SET

KK Pin warm landing
MODEL: SC07

ANALYSIS RESULTS:

Schedl	Blk Step	Cycles	Flaw Size a	Flaw Size c	K max a-tip
1	1	19720.	0.0665	0.0752	9.951 t
1	2	39440.	0.0665	0.0752	9.951 t
1	3	59160.	0.0665	0.0752	9.951 t
1	4	78880.	0.0665	0.0752	9.951 t
1	5	98600.	0.0665	0.0752	9.951 t
1	6	118320.	0.0665	0.0752	9.951 t
1	7	138040.	0.0665	0.0752	9.951 t
1	8	157760.	0.0665	0.0752	9.951 t
1	9	177480.	0.0665	0.0752	9.951 t
1	10	197200.	0.0665	0.0752	9.951 t
1	11	216920.	0.0665	0.0752	9.951 t
1	12	236640.	0.0665	0.0752	9.951 t

FINAL RESULTS:
Critical Crack Size has NOT been reached.

at Cycle No. 8701.00
of Load Step No. 13 Description: None
of Block No. 12
of Schedule No. 1
Crack Size a = 0.665131E-01
Total Cycles = 236640.00

t - indicates this step or a step in this block was below threshold
Corresponding semi crack length, c = 0.751711E-01

Prepared By	Name/Date Saike Wang 4/17/02	LOCKHEED MARTIN Science, Engineering, Analysis, & Test Mechanical Systems Analysis Department.	Page/Section No. 1	File Name Cryopin_II
Checked By	4/17/02		Drawing No.	SCD0678
Title	AMS-02 Magnet strap Clevis Pin (Cryo) Section L-L.			

SC07

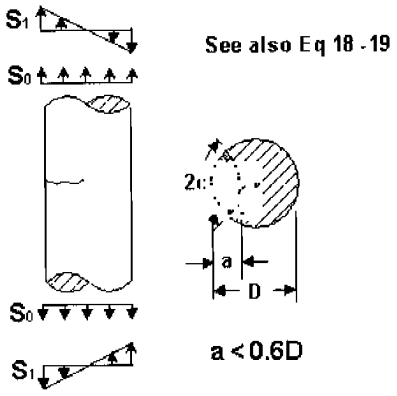

Material: AISI 316LN (-452F)
NASA/FLAGRO Crack case type: SC07

Section Properties:

Pin diameter D = 0.7087 in.

Crack Properties:

a = 0.04678 in.(Special dye penetrant)
c = 0.050 in.

Stress:

Axial Stress S0 = 0.0 ksi
Bending stress S3 = 122.124 ksi (ref. Sectll_clevis, pg.12)

Prepared By	Name/Date Saike Wang 4/17/02	LOCKHEED MARTIN	Page/Section No. 2	File Name Cryopin_II
Checked By	4/17/02	Science, Engineering, Analysis, & Test Mechanical Systems Analysis Department.	Drawing No.	SCD0678
Title	AMS-02 Magnet Clevis Pin (Cryo) Section L-L			

This clevis attaches the C1W1 FGR3 strap with a 18 mm diameter pin. (Ref drawing SCD0678, issue 07, section L-L)
This clevis is at cryogenic temperature (-452F) for Truck transportation, Air transportation, On - Orbit condition and Launch/Landing conditions. The Flagro analysis uses the truck, Air, On-Orbit and Launch/Landing case spectrums at cryo temp.
The material data used is from code F3KA13LA2 from the NASGRO library, except that the UTS and YS are changed as per the material property for the 316LN Hiproof material as per OIE205 Rev.d , page 25.

The truck, air, on orbit spectrums are run for 1 mission with a scatter factor of 4 and the Launch/Landing spectrum is run for 3 missions with a scatter factor of 4. A special Dye penetrant inspection is used to inspect the pin, and the dye penetrant crack size c = 0.050 in. is used in the analysis.

FATIGUE CRACK GROWTH ANALYSIS

DATE: 04/09/02 TIME: 11:12:18
(computed: NASGRO Version 3.0.4, Jan 2000.)
U.S. customary units [inches, ksi, ksi sqrt(in)]

PROBLEM TITLE

LL pin cold Launch and landing for AMS-02 Magnet Straps
Special dye penetrant inspection
[Ref. SCD0687, issue 07, sect L-L)

Crack Growth Model: Non Interaction
Equation/Table : NASGRO Equation

GEOMETRY

MODEL: SC07-Part-circular Surf. crk on cylinder circ. plane.

Cylinder Diameter, D = 0.7087

FLAW SIZE: (User specified)

a (init.) = 0.4678E-01

MATERIAL

MATL 1: Edited file data ~2211
~2221

Material Header Info.:

Material 1 Data ID: F3KA13LA2
Alloy Description : AISI 316/316L ~2611

Alloy Cond/HT : Ann sht & plt ; -452F LHe
~2621
Product Form : ~2631

Environment : ~2641

Specimen Type :
Specimen Orientation :
Specimen Thickness :
Specimen Width :
Specimen Test Frequency :
Data Reference :

Material Properties:

Matl No.	UTS	YS	K1e	K1c	Ak	Bk	Thk	Kc	Keac
1	203.1	162.5	280.0	200.0				200.0	

Matl No.	Crack Growth Eqn Constants C	n	p	q	DKo	Cth+	Cth-	Rcl	Alpha	Smax/SIGo
1	0.220D-09	3.200	0.25	0.25	8.00	1.50	0.10	0.70	2.50	0.30

| Ref. OIE205 Rev.D, page 25 for UTS and YS of Hi proof 316L stainless steel)

LL pin all cold
MODEL: SC07

FATIGUE SCHEDULE BLOCK INPUT TABLE

LL pin all cold ~

[Note: Stress = Input Value * Scale Factor]

Stress Scaling Factors for Block Case: **1** **(TRUCK3-VCMAGNET)**

Scale Factor for Stress S0: 0.0000
Scale Factor for Stress S1: 1.2212 **(Ref,. Sectll_clevis, page 12)**

Stress Scaling Factors for Block Case: **2** **(AIR3-VCMAGNET)**

Scale Factor for Stress S0: 0.0000
Scale Factor for Stress S1: 1.2212

Stress Scaling Factors for Block Case: **3** **(ONORBIT2-VCMAGNET)**

Scale Factor for Stress S0: 0.0000
Scale Factor for Stress S1: 1.2212

Stress Scaling Factors for Block Case: **4** **(GSFC-VCMAGNET)**

Scale Factor for Stress S0: 0.0000
Scale Factor for Stress S1: 1.2212

Schedule info. was input manually

Total No. of Blocks in Schedule = 24

Block Number and Case Correspondences

Block Number From	-	To	Block Case No.
1	-	4	1
5	-	8	2
9	-	12	3
13	-	24	4

Stresses: Tension, bending or pin

LL pin all cold
MODEL: SC07

FATIGUE SCHEDULE BLOCK INPUT TABLE

LL pin all cold ~

BLOCK CASE NO. 1

S T E P	M: A: T: L:	NUMBER OF FATIGUE CYCLES	S0 (t1)	S0 (t2)	S1 (t1)	S1 (t2)
1:	1:	1757.00	36.70:	5.60:	36.70:	5.60:
2:	1:	2148.00	30.10:	6.40:	30.10:	6.40:
3:	1:	13668.00	25.50:	6.90:	25.50:	6.90:
4:	1:	38857.00	21.90:	7.30:	21.90:	7.30:

5:	1:	110517.00 :	19.50:	7.50:	19.50:	7.50:
6:	1:	150546.00 :	17.80:	7.70:	17.80:	7.70:
7:	1:	195456.00 :	16.50:	7.90:	16.50:	7.90:
8:	1:	1440631.00 :	15.90:	7.90:	15.90:	7.90:

Environmental Crack Growth Check for Sustained Stresses
(Kmax less than Keac): NOT SET

BLOCK CASE NO. 2

S T E P	M: A: T: L:	NUMBER OF FATIGUE CYCLES	S0 (t1)	S0 (t2)	S1 (t1)	S1 (t2)
1:	1:	17832.00 :	43.10:	4.90:	43.10:	4.90:
2:	1:	594.00 :	43.10:	4.90:	43.10:	4.90:
3:	1:	695448.00 :	22.60:	7.20:	22.60:	7.20:
4:	1:	30.00 :	43.10:	4.90:	43.10:	4.90:
5:	1:	17832.00 :	43.10:	4.90:	43.10:	4.90:

Environmental Crack Growth Check for Sustained Stresses
(Kmax less than Keac): NOT SET

BLOCK CASE NO. 3

S T E P	M: A: T: L:	NUMBER OF FATIGUE CYCLES	S0 (t1)	S0 (t2)	S1 (t1)	S1 (t2)
1:	1:	34.00 :	14.10:	8.50:	14.10:	8.50:
2:	1:	34.00 :	13.90:	8.50:	13.90:	8.50:
3:	1:	60.00 :	13.70:	8.50:	13.70:	8.50:
4:	1:	179.00 :	13.50:	8.50:	13.50:	8.50:
5:	1:	117.00 :	14.10:	8.50:	14.10:	8.50:
6:	1:	414.00 :	13.90:	8.50:	13.90:	8.50:
7:	1:	2404.00 :	13.70:	8.50:	13.70:	8.50:
8:	1:	9789.00 :	13.50:	8.50:	13.50:	8.50:
9:	1:	62675.00 :	13.40:	8.50:	13.40:	8.50:

Environmental Crack Growth Check for Sustained Stresses
(Kmax less than Keac): NOT SET

BLOCK CASE NO. 4

S T E P	M: A: T: L:	NUMBER OF FATIGUE CYCLES	S0 (t1)	S0 (t2)	S1 (t1)	S1 (t2)
1:	1:	2.00 :	96.10:	3.90:	96.10:	3.90:
2:	1:	4.00 :	88.10:	4.30:	88.10:	4.30:
3:	1:	8.00 :	80.00:	4.80:	80.00:	4.80:
4:	1:	15.00 :	72.00:	5.20:	72.00:	5.20:
5:	1:	49.00 :	64.00:	5.60:	64.00:	5.60:
6:	1:	81.00 :	55.90:	6.00:	55.90:	6.00:
7:	1:	178.00 :	47.90:	6.40:	47.90:	6.40:
8:	1:	641.00 :	39.90:	6.80:	39.90:	6.80:
9:	1:	3120.00 :	31.90:	7.20:	31.90:	7.20:
10:	1:	3405.00 :	23.80:	7.60:	23.80:	7.60:
11:	1:	5019.00 :	21.40:	7.80:	21.40:	7.80:

12:	1:	28853.00	19.80:	7.80:	19.80:	7.80:
13:	1:	91655.00	18.20:	7.90:	18.20:	7.90:

Environmental Crack Growth Check for Sustained Stresses
(Kmax less than Keac): NOT SET

LL pin all cold
MODEL: SC07

FATIGUE SCHEDULE BLOCK STRESS TABLE

LL pin all cold ~

S T E P	M: A: T: L:	NUMBER OF FATIGUE CYCLES	S0 (ksi) (t1)	S0 (ksi) (t2)	S1 (ksi) (t1)	S1 (ksi) (t2)
1:	1:	1757.00	0.00:	0.00:	44.82:	6.84:
2:	1:	2148.00	0.00:	0.00:	36.76:	7.82:
3:	1:	13668.00	0.00:	0.00:	31.14:	8.43:
4:	1:	38857.00	0.00:	0.00:	26.75:	8.92:
5:	1:	110517.00	0.00:	0.00:	23.81:	9.16:
6:	1:	150546.00	0.00:	0.00:	21.74:	9.40:
7:	1:	195456.00	0.00:	0.00:	20.15:	9.65:
8:	1:	1440631.00	0.00:	0.00:	19.42:	9.65:

Environmental Crack Growth Check for Sustained Stresses
(Kmax less than Keac): NOT SET

LL pin all cold
MODEL: SC07

FATIGUE SCHEDULE BLOCK STRESS TABLE

LL pin all cold ~

S T E P	M: A: T: L:	NUMBER OF FATIGUE CYCLES	S0 (ksi) (t1)	S0 (ksi) (t2)	S1 (ksi) (t1)	S1 (ksi) (t2)
1:	1:	17832.00	0.00:	0.00:	52.64:	5.98:
2:	1:	594.00	0.00:	0.00:	52.64:	5.98:
3:	1:	695448.00	0.00:	0.00:	27.60:	8.79:
4:	1:	30.00	0.00:	0.00:	52.64:	5.98:
5:	1:	17832.00	0.00:	0.00:	52.64:	5.98:

Environmental Crack Growth Check for Sustained Stresses
(Kmax less than Keac): NOT SET

LL pin all cold
MODEL: SC07

FATIGUE SCHEDULE BLOCK STRESS TABLE

LL pin all cold ~

S T E P	M: A: T: L:	NUMBER OF FATIGUE CYCLES	S0 (ksi) (t1)	S0 (ksi) (t2)	S1 (ksi) (t1)	S1 (ksi) (t2)
1:	1:	34.00	0.00:	0.00:	17.22:	10.38:

2:	1:	34.00 :	0.00:	0.00:	16.98:	10.38:
3:	1:	60.00 :	0.00:	0.00:	16.73:	10.38:
4:	1:	179.00 :	0.00:	0.00:	16.49:	10.38:
5:	1:	117.00 :	0.00:	0.00:	17.22:	10.38:
6:	1:	414.00 :	0.00:	0.00:	16.98:	10.38:
7:	1:	2404.00 :	0.00:	0.00:	16.73:	10.38:
8:	1:	9789.00 :	0.00:	0.00:	16.49:	10.38:
9:	1:	62675.00 :	0.00:	0.00:	16.36:	10.38:

Environmental Crack Growth Check for Sustained Stresses
(Kmax less than Keac): NOT SET

LL pin all cold
MODEL: SC07

FATIGUE SCHEDULE BLOCK STRESS TABLE

LL pin all cold

STEP	MAT	NUMBER OF FATIGUE CYCLES	S0 (ksi) (t1)	S0 (ksi) (t2)	S1 (ksi) (t1)	S1 (ksi) (t2)
1:	1:	2.00 :	0.00:	0.00:	117.36:	4.76:
2:	1:	4.00 :	0.00:	0.00:	107.59:	5.25:
3:	1:	8.00 :	0.00:	0.00:	97.70:	5.86:
4:	1:	15.00 :	0.00:	0.00:	87.93:	6.35:
5:	1:	49.00 :	0.00:	0.00:	78.16:	6.84:
6:	1:	81.00 :	0.00:	0.00:	68.27:	7.33:
7:	1:	178.00 :	0.00:	0.00:	58.50:	7.82:
8:	1:	641.00 :	0.00:	0.00:	48.73:	8.30:
9:	1:	3120.00 :	0.00:	0.00:	38.96:	8.79:
10:	1:	3405.00 :	0.00:	0.00:	29.07:	9.28:
11:	1:	5019.00 :	0.00:	0.00:	26.13:	9.53:
12:	1:	28853.00 :	0.00:	0.00:	24.18:	9.53:
13:	1:	91655.00 :	0.00:	0.00:	22.23:	9.65:

Environmental Crack Growth Check for Sustained Stresses
(Kmax less than Keac): NOT SET

LL pin all cold
MODEL: SC07

ANALYSIS RESULTS:

Schedl	Blk Step	Cycles	Flaw Size a	Flaw Size c	K max a-tip	
1	1	1953580.	0.0470	0.0503	10.690	t
1	2	3907160.	0.0472	0.0505	10.714	t
1	3	5860740.	0.0475	0.0508	10.739	t
1	4	7814320.	0.0477	0.0511	10.764	t
1	5	8546056.	0.0555	0.0601	13.552	
1	6	9277792.	0.0656	0.0721	14.609	
1	7	10009528.	0.0791	0.0886	15.922	
1	8	10741264.	0.1212	0.1442	19.592	
1	9	10816970.	0.1212	0.1442	6.412	t
1	10	10892676.	0.1212	0.1442	6.412	t
1	11	10968382.	0.1212	0.1442	6.412	t
1	12	11044088.	0.1212	0.1442	6.412	t
1	13	11177118.	0.1240	0.1481	43.707	t

1	14	11310148.	0.1270	0.1523	44.225 t
1	15	11443178.	0.1301	0.1568	44.775 t
1	16	11576208.	0.1334	0.1615	45.358 t
1	17	11709238.	0.1370	0.1667	45.976 t
1	18	11842268.	0.1407	0.1721	46.632 t
1	19	11975298.	0.1447	0.1780	47.330 t
1	20	12108328.	0.1499	0.1858	48.073
1	21	12241358.	0.1560	0.1950	49.050
1	22	12374388.	0.1629	0.2055	50.195
1	23	12507418.	0.1707	0.2177	51.507
1	24	12640448.	0.1796	0.2319	53.015

FINAL RESULTS:
Critical Crack Size has NOT been reached.

at Cycle No. 91655.00
of Load Step No. 13 Description: None
of Block No. 24
of Schedule No. 1
Crack Size a = 0.179571
Total Cycles = 12640448.

t - indicates this step or a step in this block was below threshold
Corresponding semi crack length, c = 0.231869

Prepared By	Name/Date Saike wang 4/18/02	LOCKHEED MARTIN Science, Engineering, Analysis, & Test Mechanical Systems Analysis Department.	Page/Section No. 1	File Name Coldpin_II
Checked By	4/18/02		Drawing No.	
Title	AMS-02 Magnet strap Clevis (Cold) Section L-L			

SC07

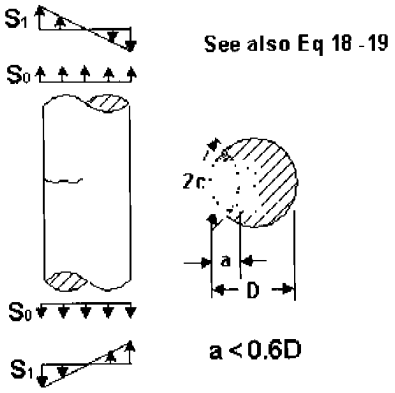

Material: AISI 316LN (-452F)
NASA/FLAGRO Crack case type: SC07

Section Properties:

Pin diameter D = 0.7087 in.

Crack Properties:

a = 0.04678 in.(Special dye penetrant)
c = 0.050 in

Stress:

Axial Stress S0 = 0.0 ksi
Bending stress S3 = 122.124 ksi (ref. sectll_clevis, pg.12)

Prepared By	Name/Date Saike Wang 4/18/02	LOCKHEED MARTIN Science, Engineering, Analysis, & Test Mechanical Systems Analysis Department.	Page/Section No. 2	File Name Coldpin_II
Checked By	4/18/02		Drawing No.	
Title	AMS-02 Magnet strap Clevis Pin (Cold) section L-L			

This clevis attaches the C1W1 FGR3 strap with a 18 mm diameter pin. (Ref drawing SCD0678, issue 07, section L-L)
This pin is at cryogenic temperature (-452F) for Truck transportation, Air transportation, Launch and On - Orbit conditions. The Flagro analysis uses the truck, Air, On-Orbit and Launch case spectrums at cryo temp.
The material data used is from code F3KA13LA2 from the NASGRO library, except that the UTS and YS are changed as per the material property for the 316LN Hiproof material as per OIE205 Rev.d , page 25.

The truck, air, on orbit spectrums are run for 1 mission with a scatter factor of 4 and the Launch spectrum is run for 3 missions with a scatter factor of 4. The final crack from this run is used as the initial crack size for the analysis for the warm landing case.

A special dye penetrant inspection is used to inspect the pin and the dye penetrant crack size c = 0.050 in. is used for the analysis.

FATIGUE CRACK GROWTH ANALYSIS

DATE: 04/09/02 TIME: 11:21:07
(computed: NASGRO Version 3.0.4, Jan 2000.)
U.S. customary units [inches, ksi, ksi sqrt(in)]

PROBLEM TITLE

LL pin cold launch for AMS-02 Magnet Strap
Special Dye penetrant
(Ref. Drg. SCD0678)

Crack Growth Model: Non Interaction
Equation/Table : NASGRO Equation

GEOMETRY

MODEL: SC07-Part-circular Surf. crk on cylinder circ. plane.

Cylinder Diameter, D = 0.7087

FLAW SIZE: (User specified)

a (init.) = 0.4678E-01

MATERIAL

MATL 1: Edited file data ~2211
~2221

Material Header Info.:

Material 1 Data ID: F3KA13LA2
Alloy Description : AISI 316/316L ~2611

Alloy Cond/HT : Ann sht & plt ; -452F LHe
~2621
Product Form : ~2631

Environment : ~2641

Specimen Type :
Specimen Orientation :
Specimen Thickness :
Specimen Width :
Specimen Test Frequency :
Data Reference :

Material Properties:

:Matl: No.:	UTS :	YS :	K1e :	K1c :	Ak :	Bk :	Thk :	Kc :	Keac :
: 1 :	203.1:	162.5:	280.0:	200.0:	:	:	:	200.0:	:

:Matl: No.:	Crack Growth Eqn Constants C :	n :	p :	q :	DKo :	Cth+ :	Cth- :	Rcl:	Alpha:	Smax/: SIGo :

```
:----:---------:-----:----:----:------:------:-----:----:-----:-----:
:  1 :0.220D-09:3.200:0.25:0.25:  8.00:  1.50: 0.10:0.70: 2.50: 0.30:
| Ref. OIE205 Rev.D, page 25 for UTS and YS of Hi proof 316L stainless
steel)

LL pin cold launch
MODEL: SC07

FATIGUE SCHEDULE BLOCK INPUT TABLE
----------------------------------
LL pin all cold                                                    ~

[Note: Stress = Input Value * Scale Factor]

Stress Scaling Factors for Block Case:  1          |TRUCK3-VCMAGNET)

Scale Factor for Stress S0:     0.0000
Scale Factor for Stress S1:     1.2212     |Ref,. Sectll_clevis,
                                            page 12)

Stress Scaling Factors for Block Case:  2          |AIR3-VCMAGNET)


Scale Factor for Stress S0:     0.0000
Scale Factor for Stress S1:     1.2212

Stress Scaling Factors for Block Case:  3          |ONORBIT2-VCMAGNET)


Scale Factor for Stress S0:     0.0000
Scale Factor for Stress S1:     1.2212

Stress Scaling Factors for Block Case:  4          |LIFTOFF-ONLY)

Scale Factor for Stress S0:     0.0000
Scale Factor for Stress S1:     1.2212

Schedule info. was input manually

Total No. of Blocks in Schedule =     24

   Block Number and Case Correspondences
 Block Number                    Block Case No.
From   -   To
    1   -      4                        1
    5   -      8                        2
    9   -     12                        3
   13   -     24                        4

Stresses: Tension, bending or pin

----------------------------------

LL pin cold launch
MODEL: SC07

FATIGUE SCHEDULE BLOCK INPUT TABLE
----------------------------------
LL pin all cold                                                    ~

BLOCK CASE NO.  1

 S  : M:  NUMBER     :        S0         :        S1         :
 T  : A:    OF       :                   :                   :
```

E P	T: L:	FATIGUE CYCLES	(t1)	(t2)	(t1)	(t2)
1:	1:	1757.00	36.70:	5.60:	36.70:	5.60:
2:	1:	2148.00	30.10:	6.40:	30.10:	6.40:
3:	1:	13668.00	25.50:	6.90:	25.50:	6.90:
4:	1:	38857.00	21.90:	7.30:	21.90:	7.30:
5:	1:	110517.00	19.50:	7.50:	19.50:	7.50:
6:	1:	150546.00	17.80:	7.70:	17.80:	7.70:
7:	1:	195456.00	16.50:	7.90:	16.50:	7.90:
8:	1:	1440631.00	15.90:	7.90:	15.90:	7.90:

Environmental Crack Growth Check for Sustained Stresses
(Kmax less than Keac): NOT SET

BLOCK CASE NO. 2

S T E P	M: A: T: L:	NUMBER OF FATIGUE CYCLES	S0 (t1)	S0 (t2)	S1 (t1)	S1 (t2)
1:	1:	17832.00	43.10:	4.90:	43.10:	4.90:
2:	1:	594.00	43.10:	4.90:	43.10:	4.90:
3:	1:	695448.00	22.60:	7.20:	22.60:	7.20:
4:	1:	30.00	43.10:	4.90:	43.10:	4.90:
5:	1:	17832.00	43.10:	4.90:	43.10:	4.90:

Environmental Crack Growth Check for Sustained Stresses
(Kmax less than Keac): NOT SET

BLOCK CASE NO. 3

S T E P	M: A: T: L:	NUMBER OF FATIGUE CYCLES	S0 (t1)	S0 (t2)	S1 (t1)	S1 (t2)
1:	1:	34.00	14.10:	8.50:	14.10:	8.50:
2:	1:	34.00	13.90:	8.50:	13.90:	8.50:
3:	1:	60.00	13.70:	8.50:	13.70:	8.50:
4:	1:	179.00	13.50:	8.50:	13.50:	8.50:
5:	1:	117.00	14.10:	8.50:	14.10:	8.50:
6:	1:	414.00	13.90:	8.50:	13.90:	8.50:
7:	1:	2404.00	13.70:	8.50:	13.70:	8.50:
8:	1:	9789.00	13.50:	8.50:	13.50:	8.50:
9:	1:	62675.00	13.40:	8.50:	13.40:	8.50:

Environmental Crack Growth Check for Sustained Stresses
(Kmax less than Keac): NOT SET

BLOCK CASE NO. 4

S T E P	M: A: T: L:	NUMBER OF FATIGUE CYCLES	S0 (t1)	S0 (t2)	S1 (t1)	S1 (t2)
1:	1:	1.00	96.10:	3.90:	96.10:	3.90:
2:	1:	3.00	88.10:	4.30:	88.10:	4.30:
3:	1:	5.00	80.00:	4.80:	80.00:	4.80:

4:	1:	12.00 :	72.00:	5.20:	72.00:	5.20:
5:	1:	46.00 :	64.00:	5.60:	64.00:	5.60:
6:	1:	78.00 :	55.90:	6.00:	55.90:	6.00:
7:	1:	165.00 :	47.90:	6.40:	47.90:	6.40:
8:	1:	493.00 :	39.90:	6.80:	39.90:	6.80:
9:	1:	2229.00 :	31.90:	7.20:	31.90:	7.20:
10:	1:	2132.00 :	23.80:	7.60:	23.80:	7.60:
11:	1:	2920.00 :	21.40:	7.80:	21.40:	7.80:
12:	1:	22272.00 :	19.80:	7.80:	19.80:	7.80:
13:	1:	82954.00 :	18.20:	7.90:	18.20:	7.90:

Environmental Crack Growth Check for Sustained Stresses
(Kmax less than Keac): NOT SET

LL pin cold launch
MODEL: SC07

FATIGUE SCHEDULE BLOCK STRESS TABLE

LL pin all cold

S T E P	M: A: T: L:	NUMBER OF FATIGUE CYCLES	S0 (ksi) (t1)	S0 (ksi) (t2)	S1 (ksi) (t1)	S1 (ksi) (t2)
1:	1:	1757.00 :	0.00:	0.00:	44.82:	6.84:
2:	1:	2148.00 :	0.00:	0.00:	36.76:	7.82:
3:	1:	13668.00 :	0.00:	0.00:	31.14:	8.43:
4:	1:	38857.00 :	0.00:	0.00:	26.75:	8.92:
5:	1:	110517.00 :	0.00:	0.00:	23.81:	9.16:
6:	1:	150546.00 :	0.00:	0.00:	21.74:	9.40:
7:	1:	195456.00 :	0.00:	0.00:	20.15:	9.65:
8:	1:	1440631.00 :	0.00:	0.00:	19.42:	9.65:

Environmental Crack Growth Check for Sustained Stresses
(Kmax less than Keac): NOT SET

LL pin cold launch
MODEL: SC07

FATIGUE SCHEDULE BLOCK STRESS TABLE

LL pin all cold

S T E P	M: A: T: L:	NUMBER OF FATIGUE CYCLES	S0 (ksi) (t1)	S0 (ksi) (t2)	S1 (ksi) (t1)	S1 (ksi) (t2)
1:	1:	17832.00 :	0.00:	0.00:	52.64:	5.98:
2:	1:	594.00 :	0.00:	0.00:	52.64:	5.98:
3:	1:	695448.00 :	0.00:	0.00:	27.60:	8.79:
4:	1:	30.00 :	0.00:	0.00:	52.64:	5.98:
5:	1:	17832.00 :	0.00:	0.00:	52.64:	5.98:

Environmental Crack Growth Check for Sustained Stresses
(Kmax less than Keac): NOT SET

LL pin cold launch
MODEL: SC07

FATIGUE SCHEDULE BLOCK STRESS TABLE

LL pin all cold ~

S T E P	M: A: T: L:	NUMBER OF FATIGUE CYCLES	S0 (ksi) (t1)	S0 (ksi) (t2)	S1 (ksi) (t1)	S1 (ksi) (t2)
1:	1:	34.00	0.00:	0.00:	17.22:	10.38:
2:	1:	34.00	0.00:	0.00:	16.98:	10.38:
3:	1:	60.00	0.00:	0.00:	16.73:	10.38:
4:	1:	179.00	0.00:	0.00:	16.49:	10.38:
5:	1:	117.00	0.00:	0.00:	17.22:	10.38:
6:	1:	414.00	0.00:	0.00:	16.98:	10.38:
7:	1:	2404.00	0.00:	0.00:	16.73:	10.38:
8:	1:	9789.00	0.00:	0.00:	16.49:	10.38:
9:	1:	62675.00	0.00:	0.00:	16.36:	10.38:

Environmental Crack Growth Check for Sustained Stresses
(Kmax less than Keac): NOT SET

LL pin cold launch
MODEL: SC07

FATIGUE SCHEDULE BLOCK STRESS TABLE

LL pin all cold ~

S T E P	M: A: T: L:	NUMBER OF FATIGUE CYCLES	S0 (ksi) (t1)	S0 (ksi) (t2)	S1 (ksi) (t1)	S1 (ksi) (t2)
1:	1:	1.00	0.00:	0.00:	117.36:	4.76:
2:	1:	3.00	0.00:	0.00:	107.59:	5.25:
3:	1:	5.00	0.00:	0.00:	97.70:	5.86:
4:	1:	12.00	0.00:	0.00:	87.93:	6.35:
5:	1:	46.00	0.00:	0.00:	78.16:	6.84:
6:	1:	78.00	0.00:	0.00:	68.27:	7.33:
7:	1:	165.00	0.00:	0.00:	58.50:	7.82:
8:	1:	493.00	0.00:	0.00:	48.73:	8.30:
9:	1:	2229.00	0.00:	0.00:	38.96:	8.79:
10:	1:	2132.00	0.00:	0.00:	29.07:	9.28:
11:	1:	2920.00	0.00:	0.00:	26.13:	9.53:
12:	1:	22272.00	0.00:	0.00:	24.18:	9.53:
13:	1:	82954.00	0.00:	0.00:	22.23:	9.65:

Environmental Crack Growth Check for Sustained Stresses
(Kmax less than Keac): NOT SET

LL pin cold launch
MODEL: SC07

ANALYSIS RESULTS:

Schedl	Blk Step	Cycles	Flaw Size a	Flaw Size c	K max a-tip
1	1	1953580.	0.0470	0.0503	10.690 t
1	2	3907160.	0.0472	0.0505	10.714 t
1	3	5860740.	0.0475	0.0508	10.739 t
1	4	7814320.	0.0477	0.0511	10.764 t
1	5	8546056.	0.0555	0.0601	13.552

1	6	9277792.	0.0656	0.0721	14.609	
1	7	10009528.	0.0791	0.0886	15.922	
1	8	10741264.	0.1212	0.1442	19.592	
1	9	10816970.	0.1212	0.1442	6.412	t
1	10	10892676.	0.1212	0.1442	6.412	t
1	11	10968382.	0.1212	0.1442	6.412	t
1	12	11044088.	0.1212	0.1442	6.412	t
1	13	11157398.	0.1233	0.1471	43.701	t
1	14	11270708.	0.1255	0.1502	44.091	t
1	15	11384018.	0.1278	0.1535	44.499	t
1	16	11497328.	0.1302	0.1569	44.927	t
1	17	11610638.	0.1328	0.1606	45.373	t
1	18	11723948.	0.1354	0.1644	45.840	t
1	19	11837258.	0.1381	0.1684	46.329	t
1	20	11950568.	0.1410	0.1726	46.840	t
1	21	12063878.	0.1441	0.1770	47.376	t
1	22	12177188.	0.1472	0.1817	47.938	t
1	23	12290498.	0.1516	0.1883	48.529	
1	24	12403808.	0.1565	0.1957	49.348	

FINAL RESULTS:
Critical Crack Size has NOT been reached.

at Cycle No. 82954.00
of Load Step No. 13 Description: None
of Block No. 24
of Schedule No. 1
Crack Size a = 0.156491
Total Cycles = 12403808.

t - indicates this step or a step in this block was below threshold
Corresponding semi crack length, c = 0.195708

Prepared By	Name/Date Saike wang 4/19/02	LOCKHEED MARTIN	Page/Section No. 1	File Name warmpin_II
Checked By	4/19/02	Science, Engineering, Analysis, & Test Mechanical Systems Analysis Department.	Drawing No.	
Title	AMS-02 Magnet strap Clevis (warm) Section L-L			

SC07

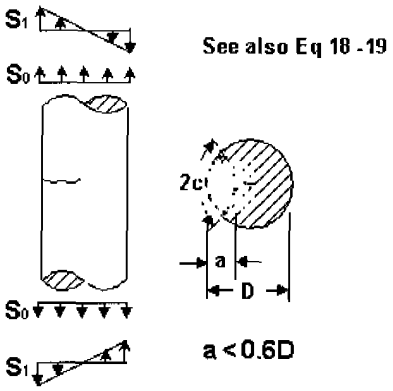

Material: AISI 316LN (75F)
NASA/FLAGRO Crack case type: SC07

Section Properties:

Pin diameter D = 0.7087 in.

Crack Properties:

a = 0.1565 in. (Ref. LL-pin-cold-launch page 6)

Axial Stress S0 = 0.0 ksi
Bending stress S3 = 105.579 ksi (ref. sectll_clevis, pg.12)

Prepared By	Name/Date Saike Wang 4/19/02	LOCKHEED MARTIN Science, Engineering, Analysis, & Test Mechanical Systems Analysis Department.	Page/Section No. 2	File Name warmpin_ll
Checked By	4/19/02		Drawing No.	
Title	AMS-02 Magnet strap Clevis Pin (Warm) section L-L			

This clevis attaches the C1W1 FGR3 strap with a 18 mm diameter pin. (Ref drawing SCD0678, issue 07, section L-L)
This pin is at room temperature (75F) for Landing conditions. The Flagro analysis uses the landing case spectrums at room temp.
The material data used is from code F3KA13AB1 from the NASGRO library, except that the UTS and YS are changed as per the material property for the 316LN Hiproof material as per OIE205 Rev.d , page 25.

The Landing spectrum is run for 3 missions with a scatter factor of 4. The final crack from the cold launch case is used as the initial crack size for the analysis for this case. (Ref. LL-pin-cold-launch, page 6)

FATIGUE CRACK GROWTH ANALYSIS

DATE: 04/09/02 TIME: 12:26:55
(computed: NASGRO Version 3.0.4, Jan 2000.)
U.S. customary units [inches, ksi, ksi sqrt(in)]

PROBLEM TITLE

LL pin warm landing for AMS-02 Magnet Straps
Special Dye penetrant inspection
(Ref. Drg SCD0678, sect LL)

Crack Growth Model: Non Interaction
Equation/Table : NASGRO Equation

GEOMETRY

MODEL: SC07-Part-circular Surf. crk on cylinder circ. plane.

Cylinder Diameter, D = 0.7087

FLAW SIZE: (User specified)

a (init.) = 0.1565 **(Final crack size from LL-pin-cold-launch page 6)**

MATERIAL

MATL 1: Edited file data ~2211
~2221

Material Header Info.:

Material 1 Data ID: F3KA13AB1
Alloy Description : AISI 316/316L ~2611

Alloy Cond/HT : Ann sht & plt ~262
1
Product Form : ~2631

Environment : ~2641

Specimen Type :
Specimen Orientation :
Specimen Thickness :
Specimen Width :
Specimen Test Frequency :
Data Reference :

Material Properties:

Matl: No.	UTS	YS	K1e	K1c	Ak	Bk	Thk	Kc	Keac
1	**127.6**	**108.1**	280.0	200.0				200.0	

Matl: No.	Crack Growth Eqn Constants C	n	p	q	DKo	Cth+	Cth-	Rcl	Alpha	Smax/SIGo
1	0.220D-09	3.200	0.25	0.25	3.50	1.50	0.10	0.70	2.50	0.30

(Ref. OIE 205 Rev.D, page 25 for UTS and YS of 316L Hi-proof pin)

LL pin warm landing
MODEL: SC07

FATIGUE SCHEDULE BLOCK INPUT TABLE

LL pin warm landing

[Note: Stress = Input Value * Scale Factor]

Stress Scaling Factors for Block Case: **1** **(LAND-ONLY)**

Scale Factor for Stress S0: 0.0000
Scale Factor for Stress S1: 1.0558

Schedule info. was input manually

Total No. of Blocks in Schedule = 12

Block Number and Case Correspondences

Block Number From - To	Block Case No.
1 - 12	1

Stresses: Tension, bending or pin

LL pin warm landing
MODEL: SC07

FATIGUE SCHEDULE BLOCK INPUT TABLE

LL pin warm landing

SINGLE DISTINCT BLOCK

STEP	MAT	NUMBER OF FATIGUE CYCLES	S0 (t1)	S0 (t2)	S1 (t1)	S1 (t2)
1	1	1.00	100.00	3.70	100.00	3.70
2	1	1.00	91.30	4.20	91.30	4.20
3	1	3.00	82.60	4.70	82.60	4.70
4	1	3.00	74.00	5.20	74.00	5.20
5	1	3.00	65.30	5.70	65.30	5.70
6	1	3.00	56.60	6.10	56.60	6.10
7	1	13.00	47.90	6.60	47.90	6.60
8	1	148.00	39.20	7.10	39.20	7.10
9	1	891.00	30.60	7.60	30.60	7.60
10	1	1273.00	21.90	8.10	21.90	8.10
11	1	2099.00	19.30	8.20	19.30	8.20
12	1	6581.00	17.50	8.30	17.50	8.30
13	1	8701.00	15.80	8.40	15.80	8.40

Environmental Crack Growth Check for Sustained Stresses
(Kmax less than Keac): NOT SET

LL pin warm landing
MODEL: SC07

FATIGUE SCHEDULE BLOCK STRESS TABLE

LL pin warm landing

S T E P	M: A: T: L:	NUMBER OF FATIGUE CYCLES	S0 (ksi) (t1)	S0 (ksi) (t2)	S1 (ksi) (t1)	S1 (ksi) (t2)
1	1:	1.00	0.00	0.00	105.58	3.91
2	1:	1.00	0.00	0.00	96.39	4.43
3	1:	3.00	0.00	0.00	87.21	4.96
4	1:	3.00	0.00	0.00	78.13	5.49
5	1:	3.00	0.00	0.00	68.94	6.02
6	1:	3.00	0.00	0.00	59.76	6.44
7	1:	13.00	0.00	0.00	50.57	6.97
8	1:	148.00	0.00	0.00	41.39	7.50
9	1:	891.00	0.00	0.00	32.31	8.02
10	1:	1273.00	0.00	0.00	23.12	8.55
11	1:	2099.00	0.00	0.00	20.38	8.66
12	1:	6581.00	0.00	0.00	18.48	8.76
13	1:	8701.00	0.00	0.00	16.68	8.87

Environmental Crack Growth Check for Sustained Stresses
(Kmax less than Keac): NOT SET

LL pin warm landing
MODEL: SC07

ANALYSIS RESULTS:

Schedl	Blk Step	Cycles	Flaw Size a	Flaw Size c	K max a-tip
1	1	19720.	0.1572	0.1968	45.229
1	2	39440.	0.1579	0.1978	45.347
1	3	59160.	0.1586	0.1989	45.466
1	4	78880.	0.1593	0.2000	45.586
1	5	98600.	0.1600	0.2011	45.707
1	6	118320.	0.1607	0.2022	45.830
1	7	138040.	0.1615	0.2033	45.954
1	8	157760.	0.1622	0.2045	46.079
1	9	177480.	0.1629	0.2056	46.206
1	10	197200.	0.1637	0.2068	46.333
1	11	216920.	0.1644	0.2080	46.463
1	12	236640.	0.1652	0.2091	46.593

FINAL RESULTS:
Critical Crack Size has NOT been reached.

at Cycle No. 8701.00
of Load Step No. 13 Description: None
of Block No. 12
of Schedule No. 1
Crack Size a = 0.165211
Total Cycles = 236640.00

t - indicates this step or a step in this block was below threshold
Corresponding semi crack length, c = 0.209141

Prepared By	Name/Date Saike Wang 4/1/02	LOCKHEED MARTIN Science, Engineering, Analysis, & Test Mechanical Systems Analysis Department.	Page/Section No 1	File Name Cryopin_mm
Checked By	4/1/02		Drawing No.	SCD0678
Title	AMS-02 Magnet strap Clevis Pin (Cryo) Section M-M.			

SC07

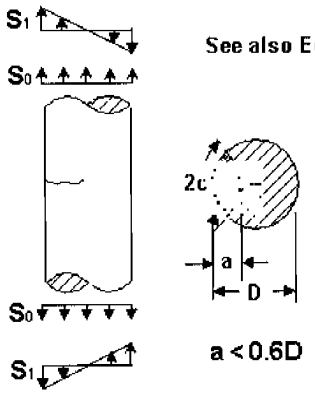

Material: AISI 316LN (-452F)
NASA/FLAGRO Crack case type: SC07

Section Properties:

Pin diameter D = 0.748 in.

Crack Properties:

a = 0.06837 in.(dye penetrant)

Stress:

Axial Stress S0 = 0.0 ksi
Bending stress S3 = 80.158 ksi (ref. Sectmm_clevis, pg.11)

Prepared By	Name/Date Saike Wang 4/1/02	LOCKHEED MARTIN	Page/Section No. 2	File Name Cryopin_mm
Checked By	4/1/02	Science, Engineering, Analysis, & Test Mechanical Systems Analysis Department.	Drawing No.	SCD0678
Title	AMS-02 Magnet Clevis Pin (Cryo) Section M-M			

This clevis attaches the C1W1 Glass S2 strap with a 19 mm diameter pin. (Ref drawing SCD0678, issue 07, section M-M)
This clevis is at cryogenic temperature (-452F) for Truck transportation, Air transportation, On - Orbit condition and Launch/Landing conditions. The Flagro analysis uses the truck, Air, On-Orbit and Launch/Landing case spectrums at cryo temp.
The material data used is from code F3KA13LA2 from the NASGRO library, except that the UTS and YS are changed as per the material property for the 316LN Hiproof material as per OIE205 Rev.d , page 25.

The truck, air, on orbit spectrums are run for 1 mission with a scatter factor of 4 and the Launch/Landing spectrum is run for 3 missions with a scatter factor of 4. Dye penetrant inspection is used to inspect the pin, and the standard dye penetrant crack size c = 0.075 in. is used. (Ref. JSC22267A, table 2).

FATIGUE CRACK GROWTH ANALYSIS

DATE: 04/23/02 TIME: 14:19:00
(computed: NASGRO Version 3.0.4, Jan 2000.)
U.S. customary units [inches, ksi, ksi sqrt(in)]

PROBLEM TITLE

M-M **Pin With Cold Launch and Landing For AMS-02 Magnet Strap**
[Ref. Drg. SCD0678, issue 07)

Crack Growth Model: Non Interaction
Equation/Table : NASGRO Equation

GEOMETRY

MODEL: SC07-Part-circular Surf. crk on cylinder circ. plane.

Cylinder Diameter, D = 0.7480

FLAW SIZE (Standard NASA JSC NDE):
Method of Inspection: Dye Penetrant

a (init.) = 0.6837E-01

MATERIAL

MATL 1: Edited file data ~2211
~2221
Material Header Info.:

Material 1 Data ID: F3KA13LA2
Alloy Description : AISI 316/316L ~2611

Alloy Cond/HT : Ann sht & plt ; -452F LHe
~2621
Product Form : ~2631

Environment : ~2641

Specimen Type :
Specimen Orientation :
Specimen Thickness :
Specimen Width :
Specimen Test Frequency :
Data Reference :

Material Properties:

Matl: No.	UTS	YS	K1e	K1c	Ak	Bk	Thk	Kc	Keac
1	**203.1**	**162.5**	280.0	200.0				200.0	

Matl: No.	Crack Growth Eqn Constants C	n	p	q	DKo	Cth+	Cth-	Rcl	Alpha	Smax/SIGo
1	0.220D-09	3.200	0.25	0.25	8.00	1.50	0.10	0.70	2.50	0.30

[Ref. OIE205, Rev. D, Page 25 for UTS and YS of 316L Hi-Proof Pin)
M-M Pin With Cold Launch and Landing
MODEL: SC07

FATIGUE SCHEDULE BLOCK INPUT TABLE

Four Blocks of VCMAGNET With All Cold

[Note: Stress = Input Value * Scale Factor]

Stress Scaling Factors for Block Case: **1** **(TRUCK3-VCMAGNET)**

Scale Factor for Stress S0: 0.0000
Scale Factor for Stress S1: 0.80158 **(Ref. sectmm_clevis, Page 11)**

Stress Scaling Factors for Block Case: **2** **(AIR3-VCMAGNET)**

Scale Factor for Stress S0: 0.0000
Scale Factor for Stress S1: 0.80158

Stress Scaling Factors for Block Case: **3** **(ONORBIT2-VCMAGNET)**

Scale Factor for Stress S0: 0.0000
Scale Factor for Stress S1: 0.80158

Stress Scaling Factors for Block Case: **4** **(GSFC-VCMAGNET)**

Scale Factor for Stress S0: 0.0000
Scale Factor for Stress S1: 0.80158

Schedule info. was input manually

Total No. of Blocks in Schedule = 24

Block Number and Case Correspondences

Block Number From	-	To	Block Case No.
1	-	4	1
5	-	8	2
9	-	12	3
13	-	24	4

Stresses: Tension, bending or pin

M-M Pin With Cold Launch and Landing
MODEL: SC07

FATIGUE SCHEDULE BLOCK INPUT TABLE

Four Blocks of VCMAGNET With All Cold

BLOCK CASE NO. 1

STEP	MAT	NUMBER OF FATIGUE CYCLES	S0 (t1)	S0 (t2)	S1 (t1)	S1 (t2)
1	1	1757.00	36.70	5.60	36.70	5.60
2	1	2148.00	30.10	6.40	30.10	6.40
3	1	13668.00	25.50	6.90	25.50	6.90
4	1	38857.00	21.90	7.30	21.90	7.30
5	1	110517.00	19.50	7.50	19.50	7.50
6	1	150546.00	17.80	7.70	17.80	7.70

7:	1:	195456.00 :	16.50:	7.90:	16.50:	7.90:
8:	1:	1440631.00 :	15.90:	7.90:	15.90:	7.90:

Environmental Crack Growth Check for Sustained Stresses
(Kmax less than Keac): NOT SET

BLOCK CASE NO. 2

S	M:	NUMBER	S0		S1	
T	A:	OF				
E	T:	FATIGUE				
P	L:	CYCLES :	(t1) :	(t2) :	(t1) :	(t2) :
1:	1:	17832.00 :	43.10:	4.90:	43.10:	4.90:
2:	1:	594.00 :	43.10:	4.90:	43.10:	4.90:
3:	1:	695448.00 :	22.60:	7.20:	22.60:	7.20:
4:	1:	30.00 :	43.10:	4.90:	43.10:	4.90:
5:	1:	17832.00 :	43.10:	4.90:	43.10:	4.90:

Environmental Crack Growth Check for Sustained Stresses
(Kmax less than Keac): NOT SET

BLOCK CASE NO. 3

S	M:	NUMBER	S0		S1	
T	A:	OF				
E	T:	FATIGUE				
P	L:	CYCLES :	(t1) :	(t2) :	(t1) :	(t2) :
1:	1:	34.00 :	14.10:	8.50:	14.10:	8.50:
2:	1:	34.00 :	13.90:	8.50:	13.90:	8.50:
3:	1:	60.00 :	13.70:	8.50:	13.70:	8.50:
4:	1:	179.00 :	13.50:	8.50:	13.50:	8.50:
5:	1:	117.00 :	14.10:	8.50:	14.10:	8.50:
6:	1:	414.00 :	13.90:	8.50:	13.90:	8.50:
7:	1:	2404.00 :	13.70:	8.50:	13.70:	8.50:
8:	1:	9789.00 :	13.50:	8.50:	13.50:	8.50:
9:	1:	62675.00 :	13.40:	8.50:	13.40:	8.50:

Environmental Crack Growth Check for Sustained Stresses
(Kmax less than Keac): NOT SET

BLOCK CASE NO. 4

S	M:	NUMBER	S0		S1	
T	A:	OF				
E	T:	FATIGUE				
P	L:	CYCLES :	(t1) :	(t2) :	(t1) :	(t2) :
1:	1:	2.00 :	96.10:	3.90:	96.10:	3.90:
2:	1:	4.00 :	88.10:	4.30:	88.10:	4.30:
3:	1:	8.00 :	80.00:	4.80:	80.00:	4.80:
4:	1:	15.00 :	72.00:	5.20:	72.00:	5.20:
5:	1:	49.00 :	64.00:	5.60:	64.00:	5.60:
6:	1:	81.00 :	55.90:	6.00:	55.90:	6.00:
7:	1:	178.00 :	47.90:	6.40:	47.90:	6.40:
8:	1:	641.00 :	39.90:	6.80:	39.90:	6.80:
9:	1:	3120.00 :	31.90:	7.20:	31.90:	7.20:
10:	1:	3405.00 :	23.80:	7.60:	23.80:	7.60:
11:	1:	5019.00 :	21.40:	7.80:	21.40:	7.80:

12:	1:	28853.00	19.80:	7.80:	19.80:	7.80:
13:	1:	91655.00	18.20:	7.90:	18.20:	7.90:

Environmental Crack Growth Check for Sustained Stresses
(Kmax less than Keac): NOT SET

M-M Pin With Cold Launch and Landing
MODEL: SC07

FATIGUE SCHEDULE BLOCK STRESS TABLE

Four Blocks of VCMAGNET With All Cold

S T E P	M: A: T: L:	NUMBER OF FATIGUE CYCLES	S0 (ksi) (t1)	S0 (ksi) (t2)	S1 (ksi) (t1)	S1 (ksi) (t2)
1:	1:	1757.00	0.00:	0.00:	29.42:	4.49:
2:	1:	2148.00	0.00:	0.00:	24.13:	5.13:
3:	1:	13668.00	0.00:	0.00:	20.44:	5.53:
4:	1:	38857.00	0.00:	0.00:	17.55:	5.85:
5:	1:	110517.00	0.00:	0.00:	15.63:	6.01:
6:	1:	150546.00	0.00:	0.00:	14.27:	6.17:
7:	1:	195456.00	0.00:	0.00:	13.23:	6.33:
8:	1:	1440631.00	0.00:	0.00:	12.75:	6.33:

Environmental Crack Growth Check for Sustained Stresses
(Kmax less than Keac): NOT SET

M-M Pin With Cold Launch and Landing
MODEL: SC07

FATIGUE SCHEDULE BLOCK STRESS TABLE

Four Blocks of VCMAGNET With All Cold

S T E P	M: A: T: L:	NUMBER OF FATIGUE CYCLES	S0 (ksi) (t1)	S0 (ksi) (t2)	S1 (ksi) (t1)	S1 (ksi) (t2)
1:	1:	17832.00	0.00:	0.00:	34.55:	3.93:
2:	1:	594.00	0.00:	0.00:	34.55:	3.93:
3:	1:	695448.00	0.00:	0.00:	18.12:	5.77:
4:	1:	30.00	0.00:	0.00:	34.55:	3.93:
5:	1:	17832.00	0.00:	0.00:	34.55:	3.93:

Environmental Crack Growth Check for Sustained Stresses
(Kmax less than Keac): NOT SET

M-M Pin With Cold Launch and Landing
MODEL: SC07

FATIGUE SCHEDULE BLOCK STRESS TABLE

Four Blocks of VCMAGNET With All Cold

S T E P	M: A: T: L:	NUMBER OF FATIGUE CYCLES	S0 (ksi) (t1)	S0 (ksi) (t2)	S1 (ksi) (t1)	S1 (ksi) (t2)

1:	1:	34.00 :	0.00:	0.00:	11.30:	6.81:
2:	1:	34.00 :	0.00:	0.00:	11.14:	6.81:
3:	1:	60.00 :	0.00:	0.00:	10.98:	6.81:
4:	1:	179.00 :	0.00:	0.00:	10.82:	6.81:
5:	1:	117.00 :	0.00:	0.00:	11.30:	6.81:
6:	1:	414.00 :	0.00:	0.00:	11.14:	6.81:
7:	1:	2404.00 :	0.00:	0.00:	10.98:	6.81:
8:	1:	9789.00 :	0.00:	0.00:	10.82:	6.81:
9:	1:	62675.00 :	0.00:	0.00:	10.74:	6.81:

Environmental Crack Growth Check for Sustained Stresses
(Kmax less than Keac): NOT SET

M-M Pin With Cold Launch and Landing
MODEL: SC07

FATIGUE SCHEDULE BLOCK STRESS TABLE

Four Blocks of VCMAGNET With All Cold

STEP	MAT	NUMBER OF FATIGUE CYCLES	S0 (ksi) (t1)	S0 (ksi) (t2)	S1 (ksi) (t1)	S1 (ksi) (t2)
1:	1:	2.00 :	0.00:	0.00:	77.03:	3.13:
2:	1:	4.00 :	0.00:	0.00:	70.62:	3.45:
3:	1:	8.00 :	0.00:	0.00:	64.13:	3.85:
4:	1:	15.00 :	0.00:	0.00:	57.71:	4.17:
5:	1:	49.00 :	0.00:	0.00:	51.30:	4.49:
6:	1:	81.00 :	0.00:	0.00:	44.81:	4.81:
7:	1:	178.00 :	0.00:	0.00:	38.40:	5.13:
8:	1:	641.00 :	0.00:	0.00:	31.98:	5.45:
9:	1:	3120.00 :	0.00:	0.00:	25.57:	5.77:
10:	1:	3405.00 :	0.00:	0.00:	19.08:	6.09:
11:	1:	5019.00 :	0.00:	0.00:	17.15:	6.25:
12:	1:	28853.00 :	0.00:	0.00:	15.87:	6.25:
13:	1:	91655.00 :	0.00:	0.00:	14.59:	6.33:

Environmental Crack Growth Check for Sustained Stresses
(Kmax less than Keac): NOT SET

M-M Pin With Cold Launch and Landing
MODEL: SC07

ANALYSIS RESULTS:

Schedl	Blk Step	Cycles	Flaw Size a	Flaw Size c	K max a-tip	
1	1	1953580.	0.0684	0.0751	8.349	t
1	2	3907160.	0.0685	0.0751	8.352	t
1	3	5860740.	0.0685	0.0752	8.355	t
1	4	7814320.	0.0686	0.0752	8.357	t
1	5	8546056.	0.0712	0.0784	9.979	
1	6	9277792.	0.0741	0.0819	10.159	
1	7	10009528.	0.0772	0.0857	10.372	
1	8	10741264.	0.0805	0.0898	10.574	
1	9	10816970.	0.0805	0.0898	3.457	t
1	10	10892676.	0.0805	0.0898	3.457	t
1	11	10968382.	0.0805	0.0898	3.457	t

1	12	11044088.	0.0805	0.0898	3.457 t
1	13	11177118.	0.0806	0.0900	23.562 t
1	14	11310148.	0.0808	0.0901	23.580 t
1	15	11443178.	0.0809	0.0903	23.598 t
1	16	11576208.	0.0810	0.0905	23.616 t
1	17	11709238.	0.0812	0.0906	23.634 t
1	18	11842268.	0.0813	0.0908	23.652 t
1	19	11975298.	0.0815	0.0910	23.671 t
1	20	12108328.	0.0816	0.0911	23.689 t
1	21	12241358.	0.0817	0.0913	23.707 t
1	22	12374388.	0.0819	0.0915	23.725 t
1	23	12507418.	0.0820	0.0916	23.744 t
1	24	12640448.	0.0821	0.0918	23.762 t

FINAL RESULTS:
Critical Crack Size has NOT been reached.

at Cycle No. 91655.00
of Load Step No. 13 Description: None
of Block No. 24
of Schedule No. 1
Crack Size a = 0.821317E-01
Total Cycles = 12640448.

Prepared By	Name/Date Saike wang 4/1/02	LOCKHEED MARTIN Science, Engineering, Analysis, & Test Mechanical Systems Analysis Department.	Page/Section No. 1	File Name Coldpin_mm
Checked By	4/1/02		Drawing No.	
Title	AMS-02 Magnet strap Clevis (Cold) Section M-M			

SC07

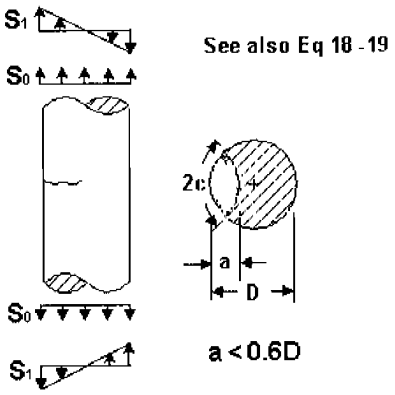

Material: AISI 316LN (-452F)
NASA/FLAGRO Crack case type: SC07

Section Properties:

Pin diameter D = 0.748 in.

Crack Properties:

a = 0.06837 in.(dye penetrant)

Stress:

Axial Stress S0 = 0.0 ksi
Bending stress S3 = 80.158 ksi (ref. sectmm_clevis, pg.11)

Prepared By	Name/Date Saike Wang 4/1/02	LOCKHEED MARTIN	Page/Section No. 2	File Name Coldpin_mm
Checked By	4/1/02	Science, Engineering, Analysis, & Test Mechanical Systems Analysis Department.	Drawing No.	
Title	AMS-02 Magnet strap Clevis Pin (Cold) section M-M			

This clevis attaches the C1W1 Glass S2 strap with a 19 mm diameter pin. (Ref drawing SCD0678, issue 07, section M-M)
This pin is at cryogenic temperature (-452F) for Truck transportation, Air transportation, Launch and On - Orbit conditions. The Flagro analysis uses the truck, Air, On-Orbit and Launch case spectrums at cryo temp.
The material data used is from code F3KA13LA2 from the NASGRO library, except that the UTS and YS are changed as per the material property for the 316LN Hiproof material as per OIE205 Rev.d , page 25.

The truck, air, on orbit spectrums are run for 1 mission with a scatter factor of 4 and the Launch spectrum is run for 3 missions with a scatter factor of 4. The final crack from this run is used as the initial crack size for the analysis for the warm landing case.

Dye penetrant inspection is used to inspect the pin and the standard dye penetrant crack size c = 0.075 in. is used (Ref. JSC22267A, table 2)

FATIGUE CRACK GROWTH ANALYSIS

DATE: 04/23/02 TIME: 14:55:26
(computed: NASGRO Version 3.0.4, Jan 2000.)
U.S. customary units [inches, ksi, ksi sqrt(in)]

PROBLEM TITLE

M-M Pin With Only Cold Launch for AMS-02 Magnet Strap
(Ref. Drg. SCD0678, issue 07)

Crack Growth Model: Non Interaction
Equation/Table : NASGRO Equation

GEOMETRY

MODEL: SC07-Part-circular Surf. crk on cylinder circ. plane.

Cylinder Diameter, D = 0.7480

FLAW SIZE (Standard NASA JSC NDE):
Method of Inspection: Dye Penetrant

a (init.) = 0.6837E-01

MATERIAL

MATL 1: Edited file data ~2211
~2221

Material Header Info.:

Material 1 Data ID: F3KA13LA2
Alloy Description : AISI 316/316L ~2611

Alloy Cond/HT : Ann sht & plt ; -452F LHe
~2621
Product Form : ~2631

Environment : ~2641

Specimen Type :
Specimen Orientation :
Specimen Thickness :
Specimen Width :
Specimen Test Frequency :
Data Reference :

Material Properties:

Matl: No.	UTS	YS	K1e	K1c	Ak	Bk	Thk	Kc	Keac
1	**203.1**	**162.5**	280.0	200.0				200.0	

Matl: No.	Crack Growth Eqn Constants C	n	p	q	DKo	Cth+	Cth-	Rcl	Alpha	Smax/SIGo
1	0.220D-09	3.200	0.25	0.25	8.00	1.50	0.10	0.70	2.50	0.30

(Ref. OIE205, Rev. D, Page 25 for UTS and YS of 316L Hi-Proof pin)
M-M Pin With Only Cold Launch
MODEL: SC07

FATIGUE SCHEDULE BLOCK INPUT TABLE

Four Blocks of VCMAGNET With All Cold ~

[Note: Stress = Input Value * Scale Factor]

Stress Scaling Factors for Block Case: **1** **(TRUCK3-VCMAGNET)**

Scale Factor for Stress S0: 0.0000
Scale Factor for Stress S1: 0.80158 **(Ref. sectmm_clevis, Page 11)**

Stress Scaling Factors for Block Case: **2** **(AIR3-VCMAGNET)**

Scale Factor for Stress S0: 0.0000
Scale Factor for Stress S1: 0.80158

Stress Scaling Factors for Block Case: **3** **(ONORBIT2-VCMAGNET)**

Scale Factor for Stress S0: 0.0000
Scale Factor for Stress S1: 0.80158

Stress Scaling Factors for Block Case: **4** **(LIFTOFF-ONLY)**

Scale Factor for Stress S0: 0.0000
Scale Factor for Stress S1: 0.80158

Schedule info. was input manually

Total No. of Blocks in Schedule = 24

Block Number and Case Correspondences

Block Number From - To	Block Case No.
1 - 4	1
5 - 8	2
9 - 12	3
13 - 24	4

Stresses: Tension, bending or pin

M-M Pin With Only Cold Launch
MODEL: SC07

FATIGUE SCHEDULE BLOCK INPUT TABLE

Four Blocks of VCMAGNET With All Cold ~

BLOCK CASE NO. 1

STEP	MAT	NUMBER OF FATIGUE CYCLES	S0 (t1)	S0 (t2)	S1 (t1)	S1 (t2)
1	1	1757.00	36.70	5.60	36.70	5.60
2	1	2148.00	30.10	6.40	30.10	6.40
3	1	13668.00	25.50	6.90	25.50	6.90
4	1	38857.00	21.90	7.30	21.90	7.30
5	1	110517.00	19.50	7.50	19.50	7.50
6	1	150546.00	17.80	7.70	17.80	7.70

7:	1:	195456.00 :	16.50:	7.90:	16.50:	7.90:
8:	1:	1440631.00 :	15.90:	7.90:	15.90:	7.90:

Environmental Crack Growth Check for Sustained Stresses
(Kmax less than Keac): NOT SET

BLOCK CASE NO. 2

S T E P	M: A: T: L:	NUMBER OF FATIGUE CYCLES	S0 (t1)	S0 (t2)	S1 (t1)	S1 (t2)
1:	1:	17832.00 :	43.10:	4.90:	43.10:	4.90:
2:	1:	594.00 :	43.10:	4.90:	43.10:	4.90:
3:	1:	695448.00 :	22.60:	7.20:	22.60:	7.20:
4:	1:	30.00 :	43.10:	4.90:	43.10:	4.90:
5:	1:	17832.00 :	43.10:	4.90:	43.10:	4.90:

Environmental Crack Growth Check for Sustained Stresses
(Kmax less than Keac): NOT SET

BLOCK CASE NO. 3

S T E P	M: A: T: L:	NUMBER OF FATIGUE CYCLES	S0 (t1)	S0 (t2)	S1 (t1)	S1 (t2)
1:	1:	34.00 :	14.10:	8.50:	14.10:	8.50:
2:	1:	34.00 :	13.90:	8.50:	13.90:	8.50:
3:	1:	60.00 :	13.70:	8.50:	13.70:	8.50:
4:	1:	179.00 :	13.50:	8.50:	13.50:	8.50:
5:	1:	117.00 :	14.10:	8.50:	14.10:	8.50:
6:	1:	414.00 :	13.90:	8.50:	13.90:	8.50:
7:	1:	2404.00 :	13.70:	8.50:	13.70:	8.50:
8:	1:	9789.00 :	13.50:	8.50:	13.50:	8.50:
9:	1:	62675.00 :	13.40:	8.50:	13.40:	8.50:

Environmental Crack Growth Check for Sustained Stresses
(Kmax less than Keac): NOT SET

BLOCK CASE NO. 4

S T E P	M: A: T: L:	NUMBER OF FATIGUE CYCLES	S0 (t1)	S0 (t2)	S1 (t1)	S1 (t2)
1:	1:	1.00 :	96.10:	3.90:	96.10:	3.90:
2:	1:	3.00 :	88.10:	4.30:	88.10:	4.30:
3:	1:	5.00 :	80.00:	4.80:	80.00:	4.80:
4:	1:	12.00 :	72.00:	5.20:	72.00:	5.20:
5:	1:	46.00 :	64.00:	5.60:	64.00:	5.60:
6:	1:	78.00 :	55.90:	6.00:	55.90:	6.00:
7:	1:	165.00 :	47.90:	6.40:	47.90:	6.40:
8:	1:	493.00 :	39.90:	6.80:	39.90:	6.80:
9:	1:	2229.00 :	31.90:	7.20:	31.90:	7.20:
10:	1:	2132.00 :	23.80:	7.60:	23.80:	7.60:
11:	1:	2920.00 :	21.40:	7.80:	21.40:	7.80:

12:	1:	22272.00 :	19.80:	7.80:	19.80:	7.80:
13:	1:	82954.00 :	18.20:	7.90:	18.20:	7.90:

Environmental Crack Growth Check for Sustained Stresses
(Kmax less than Keac): NOT SET

M-M Pin With Only Cold Launch
MODEL: SC07

FATIGUE SCHEDULE BLOCK STRESS TABLE

Four Blocks of VCMAGNET With All Cold

STEP	MATRIX	NUMBER OF FATIGUE CYCLES	S0 (ksi) (t1)	S0 (ksi) (t2)	S1 (ksi) (t1)	S1 (ksi) (t2)
1:	1:	1757.00 :	0.00:	0.00:	29.42:	4.49:
2:	1:	2149.00 :	0.00:	0.00:	24.13:	5.13:
3:	1:	13668.00 :	0.00:	0.00:	20.44:	5.53:
4:	1:	38857.00 :	0.00:	0.00:	17.55:	5.85:
5:	1:	110517.00 :	0.00:	0.00:	15.63:	6.01:
6:	1:	150546.00 :	0.00:	0.00:	14.27:	6.17:
7:	1:	195456.00 :	0.00:	0.00:	13.23:	6.33:
8:	1:	1440631.00 :	0.00:	0.00:	12.75:	6.33:

Environmental Crack Growth Check for Sustained Stresses
(Kmax less than Keac): NOT SET

M-M Pin With Only Cold Launch
MODEL: SC07

FATIGUE SCHEDULE BLOCK STRESS TABLE

Four Blocks of VCMAGNET With All Cold

STEP	MATRIX	NUMBER OF FATIGUE CYCLES	S0 (ksi) (t1)	S0 (ksi) (t2)	S1 (ksi) (t1)	S1 (ksi) (t2)
1:	1:	17832.00 :	0.00:	0.00:	34.55:	3.93:
2:	1:	594.00 :	0.00:	0.00:	34.55:	3.93:
3:	1:	695448.00 :	0.00:	0.00:	18.12:	5.77:
4:	1:	30.00 :	0.00:	0.00:	34.55:	3.93:
5:	1:	17832.00 :	0.00:	0.00:	34.55:	3.93:

Environmental Crack Growth Check for Sustained Stresses
(Kmax less than Keac): NOT SET

M-M Pin With Only Cold Launch
MODEL: SC07

FATIGUE SCHEDULE BLOCK STRESS TABLE

Four Blocks of VCMAGNET With All Cold

STEP	MATRIX	NUMBER OF FATIGUE CYCLES	S0 (ksi) (t1)	S0 (ksi) (t2)	S1 (ksi) (t1)	S1 (ksi) (t2)
1:	1:	34.00 :	0.00:	0.00:	11.30:	6.81:

2:	1:	34.00 :	0.00:	0.00:	11.14:	6.81:
3:	1:	60.00 :	0.00:	0.00:	10.98:	6.81:
4:	1:	179.00 :	0.00:	0.00:	10.82:	6.81:
5:	1:	117.00 :	0.00:	0.00:	11.30:	6.81:
6:	1:	414.00 :	0.00:	0.00:	11.14:	6.81:
7:	1:	2404.00 :	0.00:	0.00:	10.98:	6.81:
8:	1:	9789.00 :	0.00:	0.00:	10.82:	6.81:
9:	1:	62675.00 :	0.00:	0.00:	10.74:	6.81:

Environmental Crack Growth Check for Sustained Stresses
(Kmax less than Keac): NOT SET

M-M Pin With Only Cold Launch
MODEL: SC07

FATIGUE SCHEDULE BLOCK STRESS TABLE

Four Blocks of VCMAGNET With All Cold

STEP	MAT'L	NUMBER OF FATIGUE CYCLES	S0 (ksi) (t1)	S0 (ksi) (t2)	S1 (ksi) (t1)	S1 (ksi) (t2)
1:	1:	1.00 :	0.00:	0.00:	77.03:	3.13:
2:	1:	3.00 :	0.00:	0.00:	70.62:	3.45:
3:	1:	5.00 :	0.00:	0.00:	64.13:	3.85:
4:	1:	12.00 :	0.00:	0.00:	57.71:	4.17:
5:	1:	46.00 :	0.00:	0.00:	51.30:	4.49:
6:	1:	78.00 :	0.00:	0.00:	44.81:	4.81:
7:	1:	165.00 :	0.00:	0.00:	38.40:	5.13:
8:	1:	493.00 :	0.00:	0.00:	31.98:	5.45:
9:	1:	2229.00 :	0.00:	0.00:	25.57:	5.77:
10:	1:	2132.00 :	0.00:	0.00:	19.08:	6.09:
11:	1:	2920.00 :	0.00:	0.00:	17.15:	6.25:
12:	1:	22272.00 :	0.00:	0.00:	15.87:	6.25:
13:	1:	82954.00 :	0.00:	0.00:	14.59:	6.33:

Environmental Crack Growth Check for Sustained Stresses
(Kmax less than Keac): NOT SET

M-M Pin With Only Cold Launch
MODEL: SC07

ANALYSIS RESULTS:

Sched	Blk Step	Cycles	Flaw Size a	Flaw Size c	K max a-tip	
1	1	1953580.	0.0684	0.0751	8.349	t
1	2	3907160.	0.0685	0.0751	8.352	t
1	3	5860740.	0.0685	0.0752	8.355	t
1	4	7814320.	0.0686	0.0752	8.357	t
1	5	8546056.	0.0712	0.0784	9.979	
1	6	9277792.	0.0741	0.0819	10.159	
1	7	10009528.	0.0772	0.0857	10.372	
1	8	10741264.	0.0805	0.0898	10.574	
1	9	10816970.	0.0805	0.0898	3.457	t
1	10	10892676.	0.0805	0.0898	3.457	t
1	11	10968382.	0.0805	0.0898	3.457	t
1	12	11044088.	0.0805	0.0898	3.457	t

1	13	11157398.	0.0806	0.0899	23.562 t
1	14	11270708.	0.0807	0.0901	23.577 t
1	15	11384018.	0.0809	0.0902	23.592 t
1	16	11497328.	0.0810	0.0903	23.607 t
1	17	11610638.	0.0811	0.0905	23.622 t
1	18	11723948.	0.0812	0.0906	23.638 t
1	19	11837258.	0.0813	0.0908	23.653 t
1	20	11950568.	0.0814	0.0909	23.668 t
1	21	12063878.	0.0815	0.0911	23.683 t
1	22	12177188.	0.0816	0.0912	23.699 t
1	23	12290498.	0.0818	0.0913	23.714 t
1	24	12403808.	0.0819	0.0915	23.729 t

FINAL RESULTS:
Critical Crack Size has NOT been reached.

at Cycle No. 82954.00
of Load Step No. 13 Description: None
of Block No. 24
of Schedule No. 1
Crack Size a = 0.818724E-01
Total Cycles = 12403808.

t - indicates this step or a step in this block was below threshold
Corresponding semi crack length, c = 0.914764E-01

Prepared By	Name/Date Saike wang 4/25/02	LOCKHEED MARTIN Science, Engineering, Analysis, & Test Mechanical Systems Analysis Department.	Page/Section No. 1	File Name warmpin_mm
Checked By	4/25/02		Drawing No.	
Title	AMS-02 Magnet strap Clevis (warm) Section M-M			

SC07

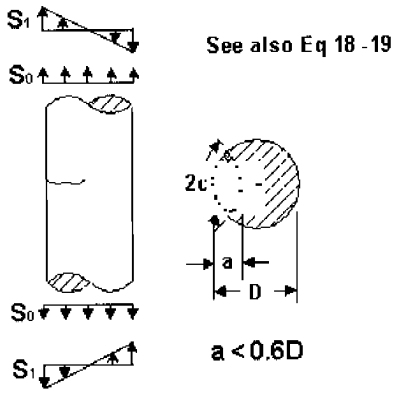

Material: AISI 316LN (75F)
NASA/FLAGRO Crack case type: SC07

Section Properties:

Pin diameter D = 0.748 in.

Crack Properties:

a = 0.0819 in. (Ref. MM-pin-cold-launch page 6)

Axial Stress S0 = 0.0 ksi
Bending stress S3 = 69.287 ksi (ref. sectmm_clevis, pg.12)

Prepared By	Name/Date Saike Wang 4/25/02	LOCKHEED MARTIN	Page/Section No. 2	File Name warmpin_mm
Checked By		Science, Engineering, Analysis, & Test Mechanical Systems Analysis Department.	Drawing No.	
Title	AMS-02 Magnet strap Clevis Pin (Warm) section M-M			

This clevis attaches the C1W1 S2 glass bod with a 19 mm diameter pin. (Ref drawing SCD0678, issue 07, section M-M)
This pin is at room temperature (75F) for Landing conditions. The Flagro analysis uses the landing case spectrums at room temp.
The material data used is from codc F3KA13AB1 from the NASGRO library, except that thc UTS and YS are changed as per the material property for the 316LN Hiproof material as per OIE205 Rev.d , page 25.

The Landing spectrum is run for 3 missions with a scatter factor of 4. The final crack from the cold launch case is used as the initial crack size for the analysis for this case. (Ref. MM-pin-cold-launch, page 6)

FATIGUE CRACK GROWTH ANALYSIS

DATE: 04/23/02 TIME: 15:33:36
(computed: NASGRO Version 3.0.4, Jan 2000.)
U.S. customary units [inches, ksi, ksi sqrt(in)]

PROBLEM TITLE

M-M Pin With Only Warm Landing for AMS-02 Magnet Strap
(Ref. Drg. SCD0678, issue 07)

Crack Growth Model: Non Interaction
Equation/Table : NASGRO Equation

GEOMETRY

MODEL: SC07-Part-circular Surf. crk on cylinder circ. plane.

Cylinder Diameter, D = 0.7480

FLAW SIZE: (User specified)

a (init.) = 0.8190E-01 **(Final crack size from MM-pin-cold-launch Page 6)**

MATERIAL

MATL 1: Edited file data ~2211
~2221

Material Header Info.:

Material 1 Data ID: F3KA13AB1
Alloy Description : AISI 316/316L ~2611

Alloy Cond/HT : Ann sht & plt ~262
1
Product Form : ~2631

Environment : ~2641

Specimen Type :
Specimen Orientation :
Specimen Thickness :
Specimen Width :
Specimen Test Frequency :
Data Reference :

Material Properties:

Matl No.	UTS	YS	K1e	K1c	Ak	Bk	Thk	Kc	Keac
1	**127.6**	**108.1**	280.0	200.0				200.0	

Matl No.	Crack Growth Eqn Constants C	n	p	q	DKo	Cth+	Cth-	Rcl	Alpha	Smax/SIGo
1	0.800D-09	3.000	0.25	0.25	3.50	1.00	0.10	0.70	2.50	0.30

(Ref. OIE205, Rev. D, Page 25 for UTS and YS of 316L Hi-Proof pin)
M-M Pin With Only Warm Landing
MODEL: SC07

FATIGUE SCHEDULE BLOCK INPUT TABLE

One Block of Warm Land Only ~

[Note: Stress = Input Value * Scale Factor]

Stress Scaling Factors for Block Case: **1** **(Name Block: LAND_ONLY)**

Scale Factor for Stress S0: 0.0000
Scale Factor for Stress S1: 0.69287 **(Ref. Sactmm_clevis, Page 11)**

Schedule info. was input manually

Total No. of Blocks in Schedule = 12

Block Number and Case Correspondences

Block Number From - To	Block Case No.
1 - 12	1

Stresses: Tension, bending or pin

M-M Pin With Only Warm Landing
MODEL: SC07

FATIGUE SCHEDULE BLOCK INPUT TABLE

One Block of Warm Land Only ~

SINGLE DISTINCT BLOCK

STEP	MAT: NUMBER OF FATIGUE CYCLES	S0 (t1)	S0 (t2)	S1 (t1)	S1 (t2)
1:	1: 1.00	100.00:	3.70:	100.00:	3.70:
2:	1: 1.00	91.30:	4.20:	91.30:	4.20:
3:	1: 3.00	82.60:	4.70:	82.60:	4.70:
4:	1: 3.00	74.00:	5.20:	74.00:	5.20:
5:	1: 3.00	65.30:	5.70:	65.30:	5.70:
6:	1: 3.00	56.60:	6.10:	56.60:	6.10:
7:	1: 13.00	47.90:	6.60:	47.90:	6.60:
8:	1: 148.00	39.20:	7.10:	39.20:	7.10:
9:	1: 891.00	30.60:	7.60:	30.60:	7.60:
10:	1: 1273.00	21.90:	8.10:	21.90:	8.10:
11:	1: 2099.00	19.30:	8.20:	19.30:	8.20:
12:	1: 6581.00	17.50:	8.30:	17.50:	8.30:
13:	1: 8701.00	15.80:	8.40:	15.80:	8.40:

Environmental Crack Growth Check for Sustained Stresses
(Kmax less than Keac): NOT SET

M-M Pin With Only Warm Landing
MODEL: SC07

FATIGUE SCHEDULE BLOCK STRESS TABLE

One Block of Warm Land Only

S T E P	M: A: T: L:	NUMBER OF FATIGUE CYCLES	S0 (ksi) (t1)	S0 (ksi) (t2)	S1 (ksi) (t1)	S1 (ksi) (t2)
1:	1:	1.00	0.00:	0.00:	69.29:	2.56:
2:	1:	1.00	0.00:	0.00:	63.26:	2.91:
3:	1:	3.00	0.00:	0.00:	57.23:	3.26:
4:	1:	3.00	0.00:	0.00:	51.27:	3.60:
5:	1:	3.00	0.00:	0.00:	45.24:	3.95:
6:	1:	3.00	0.00:	0.00:	39.22:	4.23:
7:	1:	13.00	0.00:	0.00:	33.19:	4.57:
8:	1:	148.00	0.00:	0.00:	27.16:	4.92:
9:	1:	891.00	0.00:	0.00:	21.20:	5.27:
10:	1:	1273.00	0.00:	0.00:	15.17:	5.61:
11:	1:	2099.00	0.00:	0.00:	13.37:	5.68:
12:	1:	6581.00	0.00:	0.00:	12.13:	5.75:
13:	1:	8701.00	0.00:	0.00:	10.95:	5.82:

Environmental Crack Growth Check for Sustained Stresses
(Kmax less than Keac): NOT SET

M-M Pin With Only Warm Landing
MODEL: SC07

ANALYSIS RESULTS:

Schedl	Blk Step	Cycles	Flaw Size a	Flaw Size c	K max a-tip
1	1	19720.	0.0820	0.0916	21.361 t
1	2	39440.	0.0821	0.0918	21.373 t
1	3	59160.	0.0822	0.0919	21.384 t
1	4	78880.	0.0823	0.0920	21.396 t
1	5	98600.	0.0824	0.0921	21.408 t
1	6	118320.	0.0825	0.0922	21.419 t
1	7	138040.	0.0826	0.0924	21.431 t
1	8	157760.	0.0827	0.0925	21.443 t
1	9	177480.	0.0828	0.0926	21.455 t
1	10	197200.	0.0829	0.0927	21.466 t
1	11	216920.	0.0830	0.0928	21.478 t
1	12	236640.	0.0831	0.0930	21.490 t

FINAL RESULTS:
Critical Crack Size has NOT been reached.

at Cycle No. 8701.00
of Load Step No. 13 Description: None
of Block No. 12
of Schedule No. 1
Crack Size a = 0.830673E-01
Total Cycles = 236640.00