AMS Tracker Thermal Control System (TTCS)

TTCS Progress Report

TIM-meeting, 9th January 2007, JSC, Houston

NLR-team: J. van Es, B. Verlaat (NIKHEF), A. Pauw, G. van Donk, T. Zwartbol, SM. Bardet. M. Bsibsi

SYSU team: ZH. He, KH. Guo, JQ. Ni, SS. Lu, ZX. Wang, XM. Qi, TX. Li, SS Zheng, ZC Huang, WJ Xiao, CP Tang, DC Mo, XH Diao, GY Chen, Y Chen, LQ Pei, XH Sun, KL Yu, JF Ding, ZW Pan,

INFN-AMS-team: R. Battiston, M. Menichelli, C. Gargiulo, A. Alvino, E. Laudi, et al.

CAST-team: M. Jianyin, JF. Cao, G. Lin et al.

MIT-team: V. Koutsenko, XD Cai, A. Lebedev

Outline

- Overview
- TTCS Status at SYSU
  - Accumulator Review Meeting
  - Procurement and Inspection Tests
  - EM Test Setup
  - CO_2 Climbing Height Measurement
- TTCE (M. Menichelli)

System design status:

Meetings

- **Accumulator review (30-31 October, CERN)**

Documentation

- **TTCS EM μ-g TEST PROCEDURE FOR 2nd LOOP (delivered SYSU)**
- **EM Test Procedures (3 delivered on-going) (SYSU)**
- **TTCS EM TEST FACILITES delivered(SYSU)**
- **TTCS Modelling Description delivered (SYSU)**
- **TTCS TTCS NLR Breadboard Test Plan & Procedure**
- **TTCS-ACCUMULATOR THERMAL SAFETY ANALYSIS (SYSU)**
- **Design of TTCS Accumulator (delivered CAST)**

Documentation (cont'd)

- **Receive inspection test procedure**
  - Evaporator receive inspection document finished
  - Pump receive procedure draft is finished and issue 1.0 to be delivered on 8 January
  - Heat exchanger procedure draft is finished and issue 1.0 to be delivered on 8 January
  - APS&DPS receive inspection close to be finished
  - Condenser procedure is in preparation

System Procurement status: EM

EM Hardware status

- EM Pump (to NLR→ SYSU received)
- Accu EM test will start with EM1 (received)
- EM HX manufactured (at NLR→ SYSU received)
- EM pressure sensors (received)
- EM OHP in manufacturing (NLR)
- EM evaporator (inner rings received)
- EM condenser (manufacturing in INFN Perugia)
- EM cold orbit heaters (designed and ordered)
- EM pre-heaters (designed and ordered)
- EM Test set-up (in manufacturing)
- EM DAC (ready to be tested)

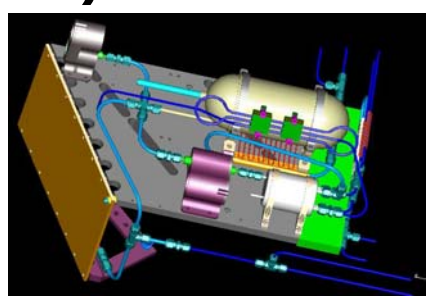

System design status: Flight Model

QM/FM Design status

- QM/FM Pump CDR documentation upto finalisation
- QM/FM Accu CDR documentation
  - Accu thermal stress margin for the Peltier saddle upto finalisation (to be discussed)
- QM/FM Heat Exchanger
  - HX thermal analyses finalised
  - HX stress analyses upto finalisation
- QM/FM condensers design finalised
  - Stress analyses to be finalised
- QM heaters design finalised

Points of concern

- Integration documents
- Pressure drop condensers tests performed

TTCS Design Status overview (cont'd)

- Ground Support Equipment
  - TGSE
    - TGSE cold plates for condenser I/F (SYSU, received and tested)
    - TGSE for USS I/F design finished (SYSU, received to be tested)
    - Dummy evaporators
      - One set is build and implemented in EM-loop (SYSU)(TBD)
      - One set is shipped from NLR to SYSU to be adapted (SYSU)
    - Filling System (received and tested)
  - EGSE
    - EGSE Phase I manufactured, Phase II designed and under test (INFN)
    - Simulation Model (plan made available May/June 2007)
  - MGSE
    - Radiator Jig finalised and under review (see separate pres)
    - Box and welding support tools to be designed (Mechanical)

Accumulator Design Review Meeting

Component status: Accumulator (CAST)

- ACC design review meeting (CAST / NASA / NLR / SYSU)
- Updated fan structure tested & document delivered (CAST); can not provide detailed Design and Drawing of Accumulator inside structure and Acc Heat Pipe
- Mechanical stress analyses upto finalisation (SYSU)

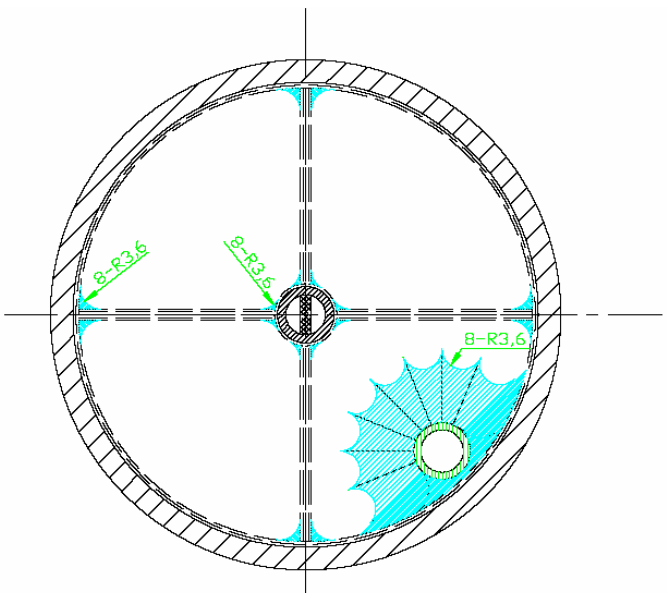

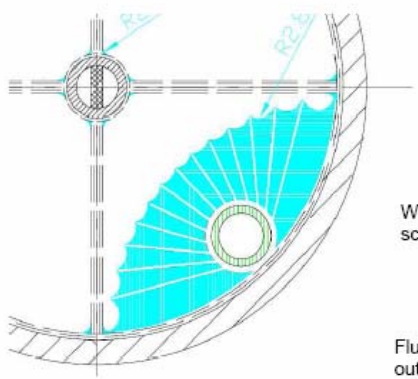

Fan mesh design

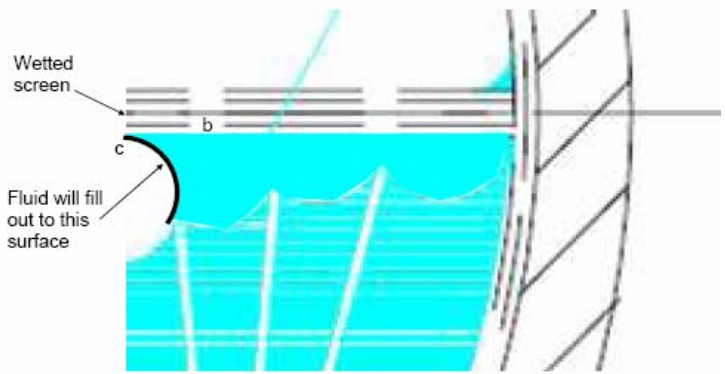

FE Models Used for Thermal Stress Analysis of Acc

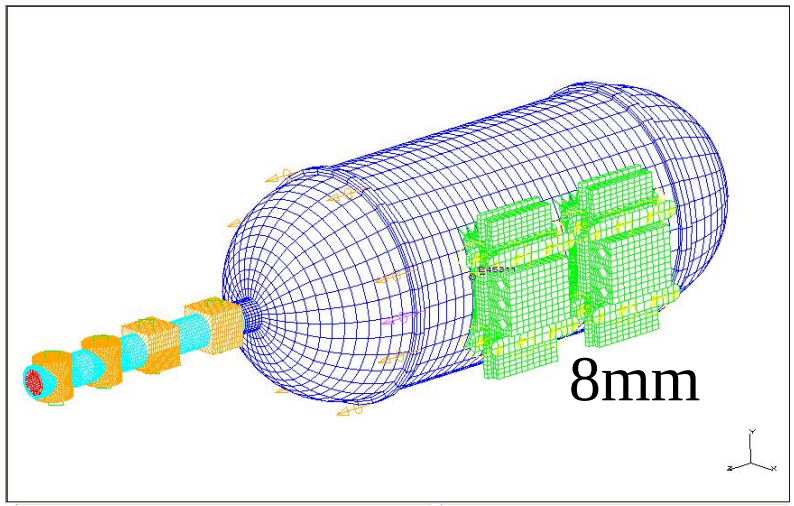

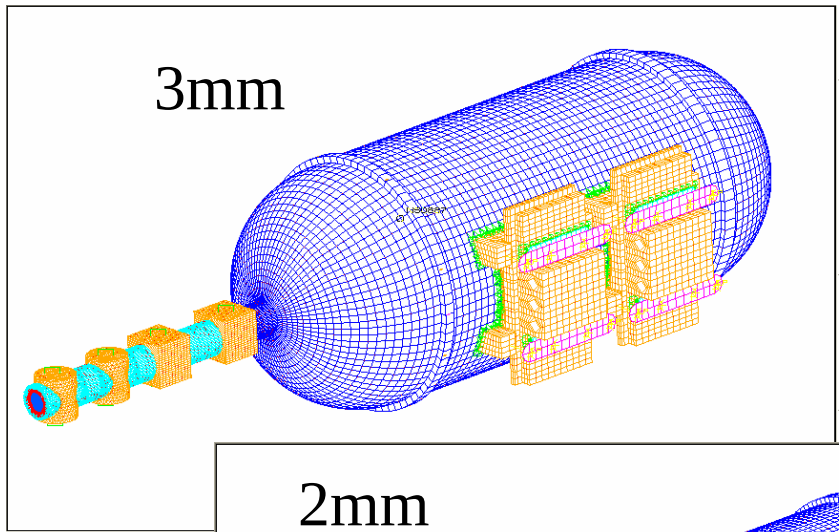

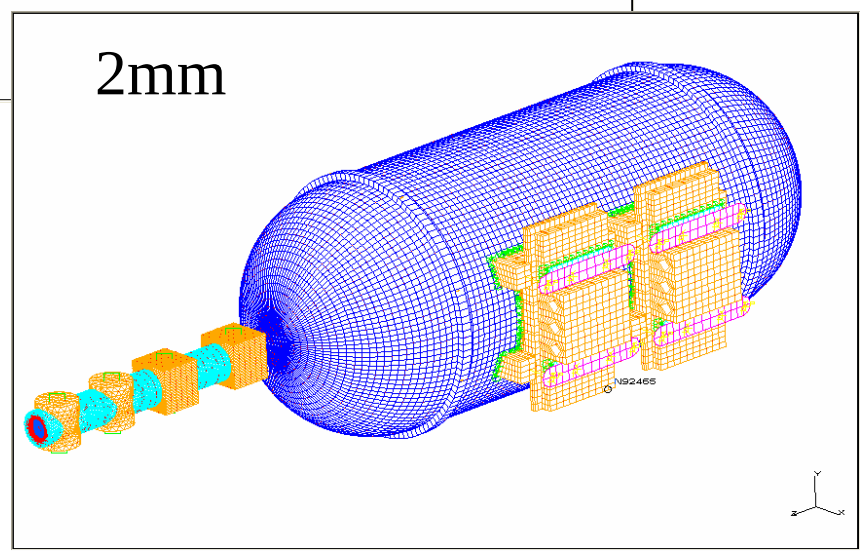

Load combination:

Thermal + Inner Pressure

Results comparison for the copper Saddle

Copper material - results comparison between the new models and the old model

Temperature Case	Model	Max Von Mises Stress(MPa)	MoS_{yeld}	Max Principle Stress(MPa)	MoS_{ult}
-15 °C	Old model	187	-0.714	249	-0.64
	3mm Model	124	-0.570	177	-0.503
	2mm Model	131	**-0.593**	187	**-0.529**
120 °C	Old model	138	-0.613	170	-0.48
	3mm Model	62.8	-0.151	76.9	0.144
	2mm Model	62.9	-0.152	82.2	0.071
21.85 °C	Old model	171	-0.688	228	-0.614
	3mm Model	105	-0.492	150	-0.413
	2mm Model	112	-0.524	158	-0.443

EM1 Accumulator Performance

With 37.5W full power, the heating rate is smaller than the required 1K/min

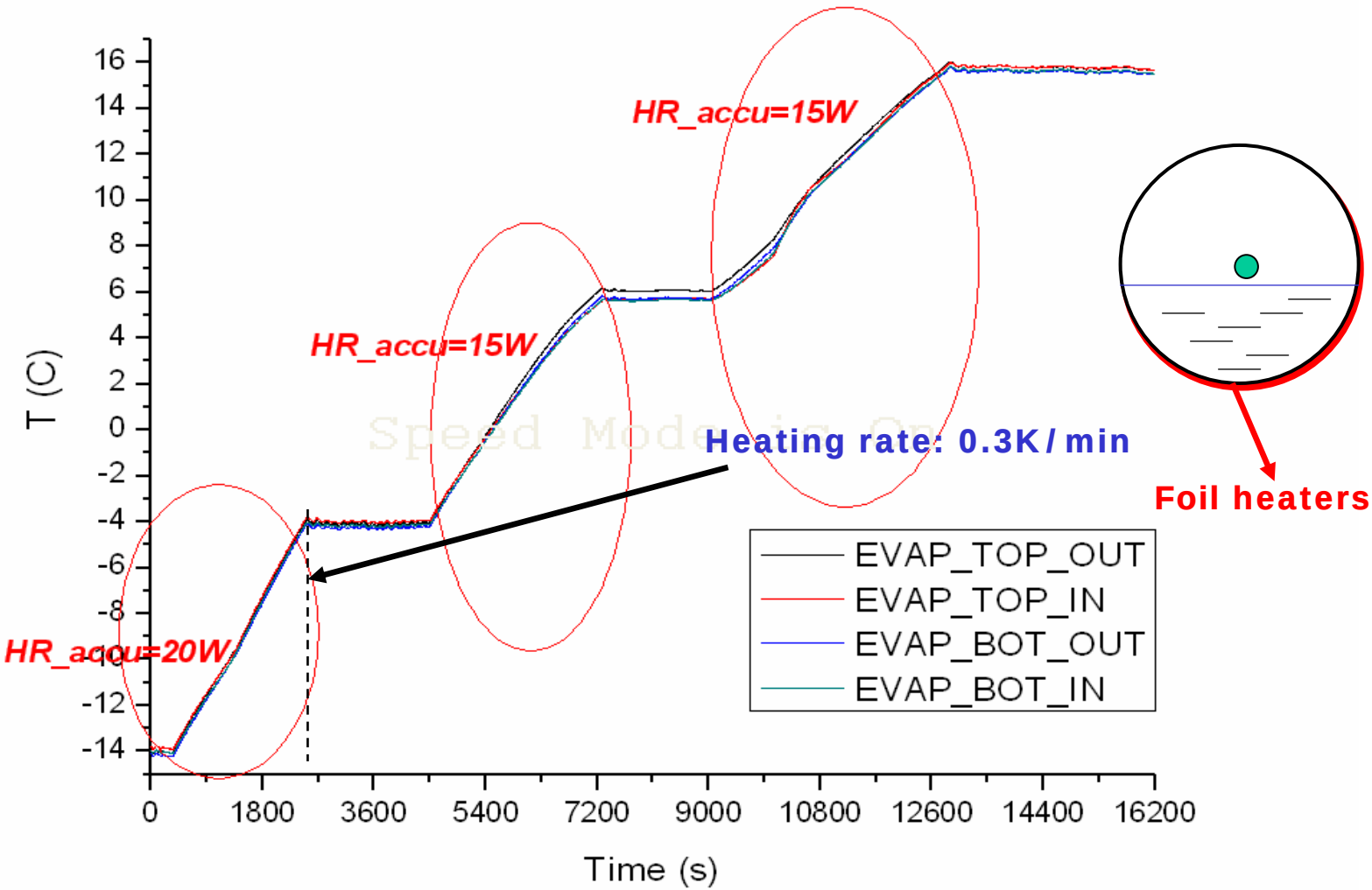

*FR=2g/s, PH=8W*2, HL=100W*2*

Set-point Change (-5C to -10C, then to -15C)

Set-point Change (5°C to 0 ° C, then to -5 ° C)

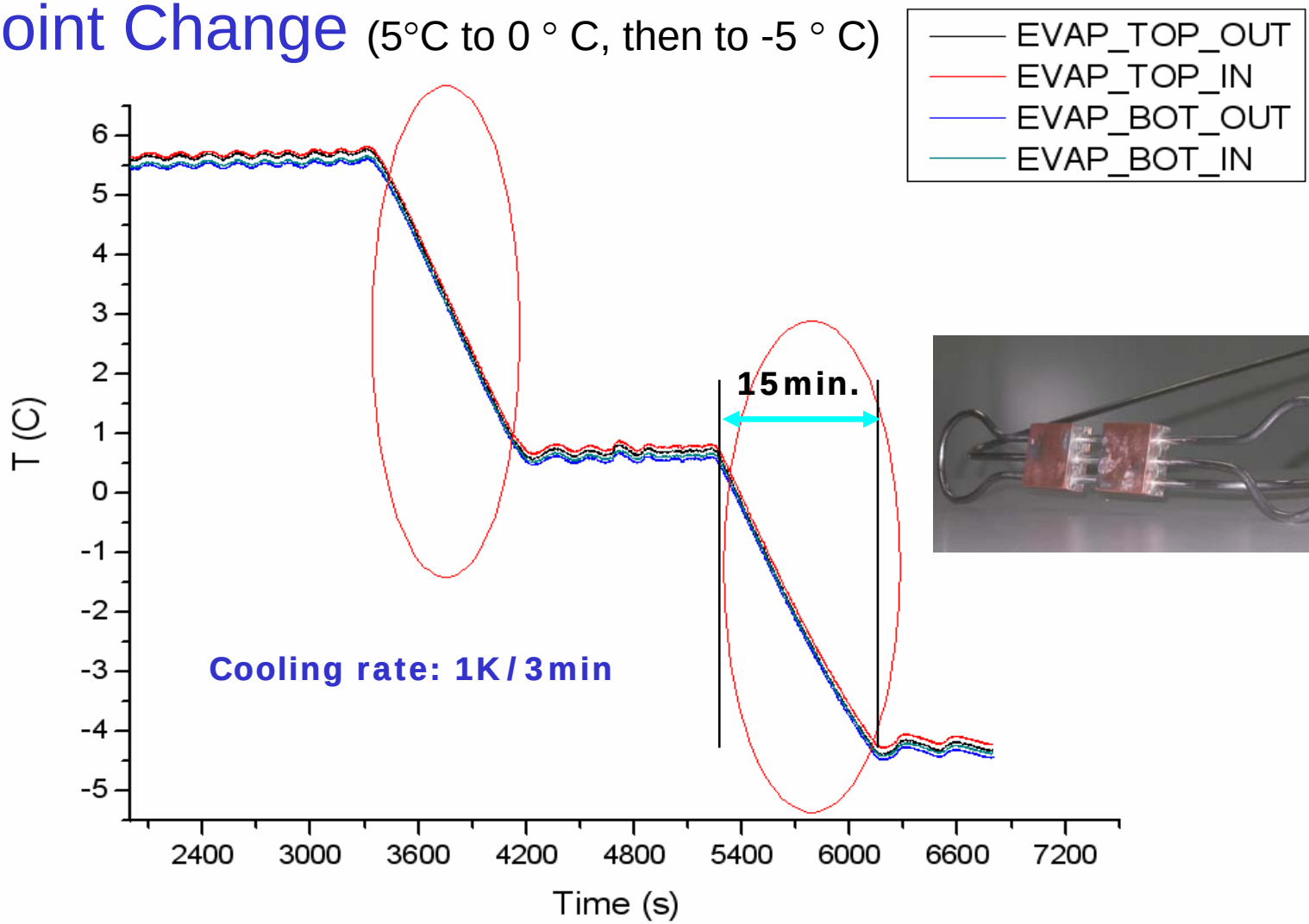

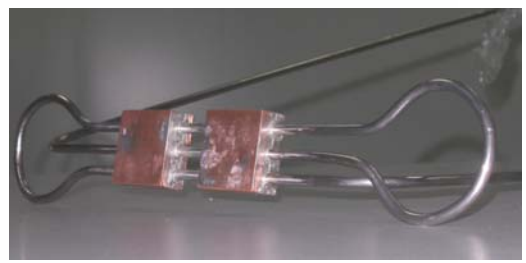

FR=2g/s, PH=8W*2, HL=100W*2, HR_accu=15W

Set-point Change (-5C to -10C, then to -15C)

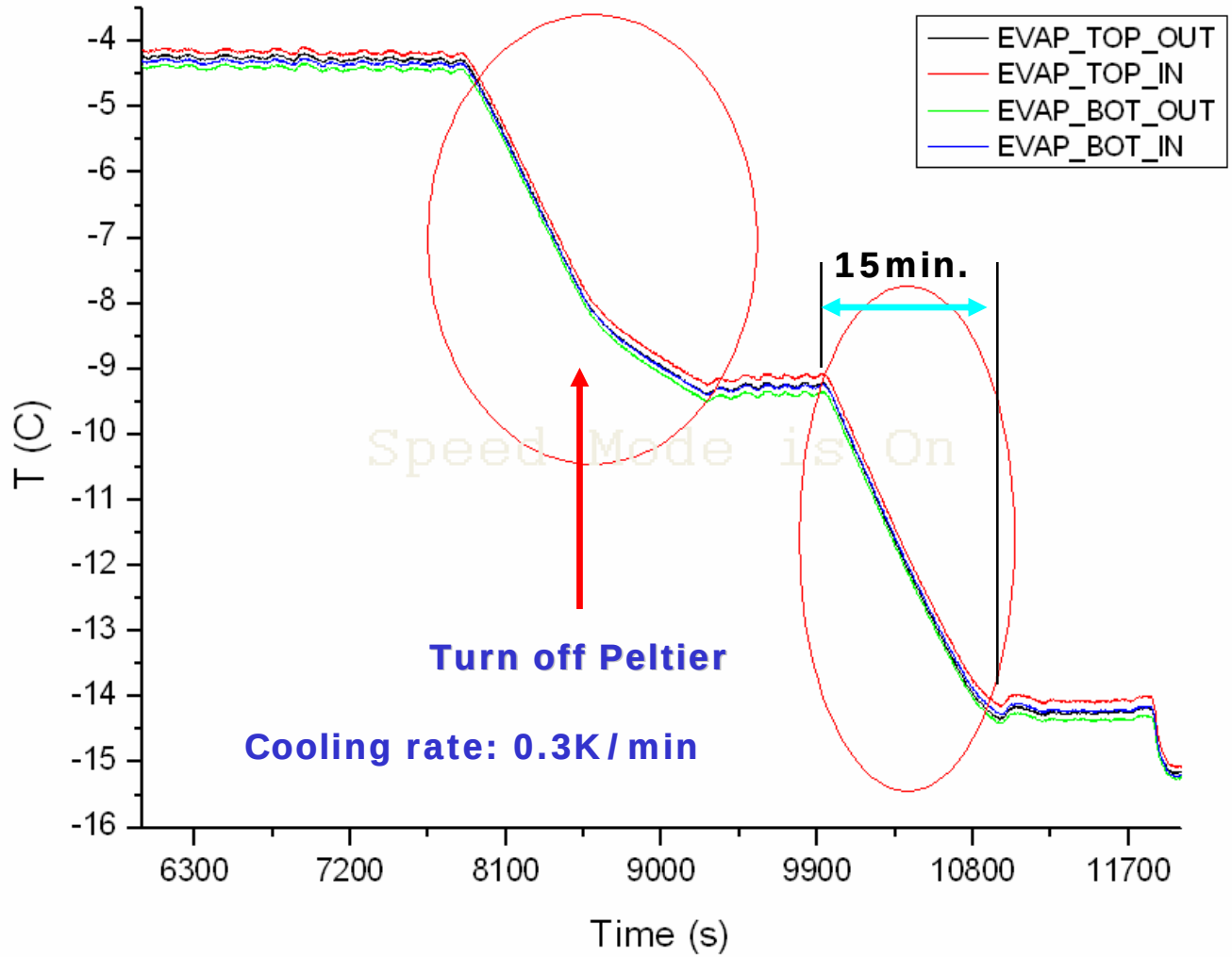

*FR=2g/s, PH=8W*2, HL=100W*2, HR_accu=15W*

APS & DPS

TTCS EM Test Procedure: APS Incoming Inspection						TEST DATE: 2007-1-6
Test engineer: X.H.Sun		CYJ_1062				
Step	**Action**	**Parameter**	**Value**	**Limits**	**Results**	**Comments**
1	Write down component serial number		M01-01			
2	Check for visual damage				✓	No visible damage
3	Check component envelope with design drawings				✓	
4	Check component mechanical I/F with design drawings				✓	Pipe and cable location
5	Check electrical connectors with design drawings/documentation				✓	4 wires
6	Perform Component health check according to component health check procedure	Output			✓	reference
7	Perform leak test according to He leak test procedure	Leak rate		$1x10^{-9}$ mbar.l/s		
8	Perform mass measurement	Mass	155.65g	200g	✓	133.9g without cable
	END OF PROCEDURE					

TTCS EM Test Procedure: DPS Incoming Inspection						TEST DATE: 2007-1-6
Test engineer: X.H.Sun		CYJ_1063				
Step	**Action**	**Parameter**	**Value**	**Limits**	**Results**	**Comments**
1	Write down component serial number		M01-01			
2	Check for visual damage				✓	No visible damage
3	Check component envelope with design drawings				✓	
4	Check component mechanical I/F with design drawings				✓	Pipe and cable location
5	Check electrical connectors with design drawings/documentation				✓	4 wires
6	Perform Component health check according to component health check procedure	Output	0.6Mpa			
7	Perform leak test according to He leak test procedure	Leak rate		$1x10^{-9}$ mbar.l/s		
8	Perform mass measurement	Mass	267.90g	200g	✓	246.16g without cable
	END OF PROCEDURE					

Totally (APS&DPS) is 423.55g, about 24g heavier, including the cable

APS Calibration Test

Calibration of the Pressure Sensors

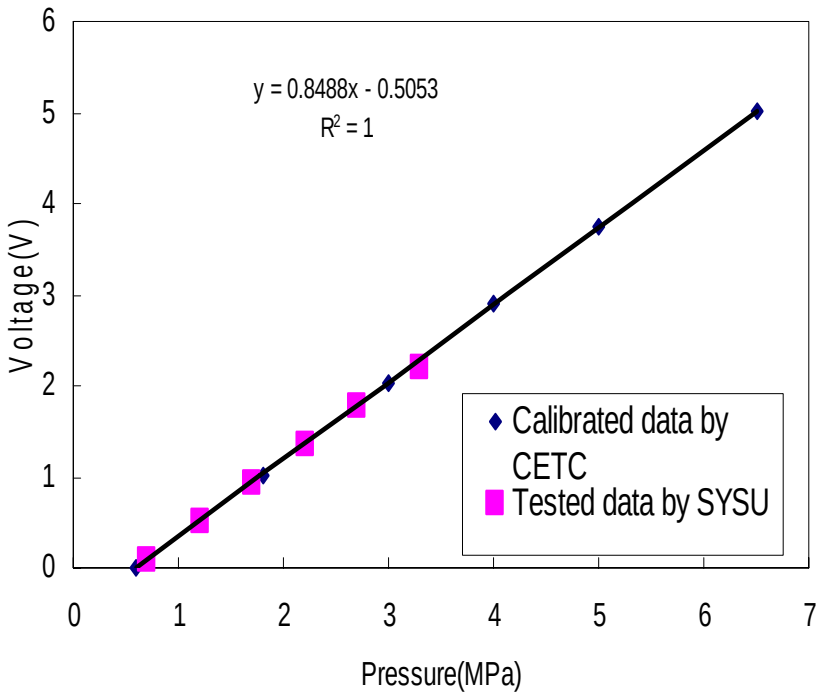

APS

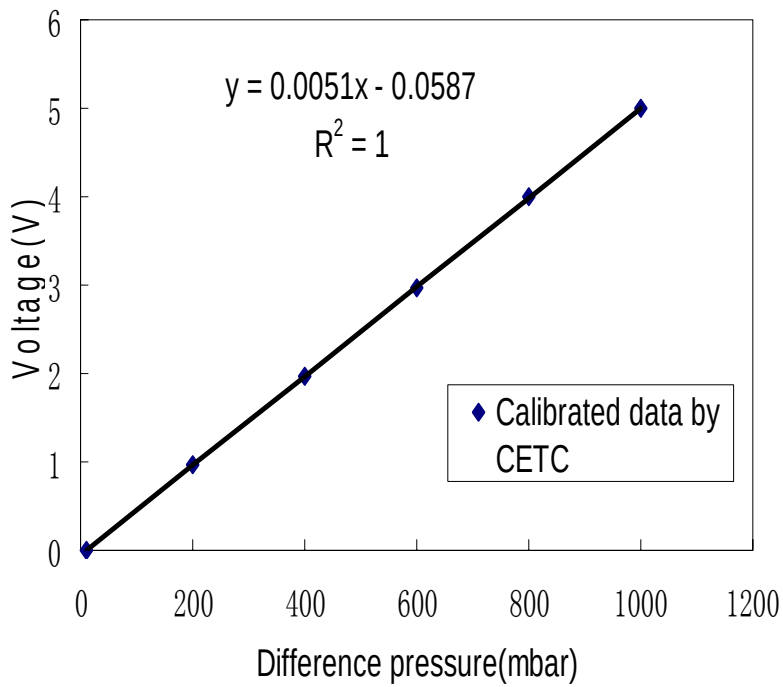

DPS

Heat Exchanger

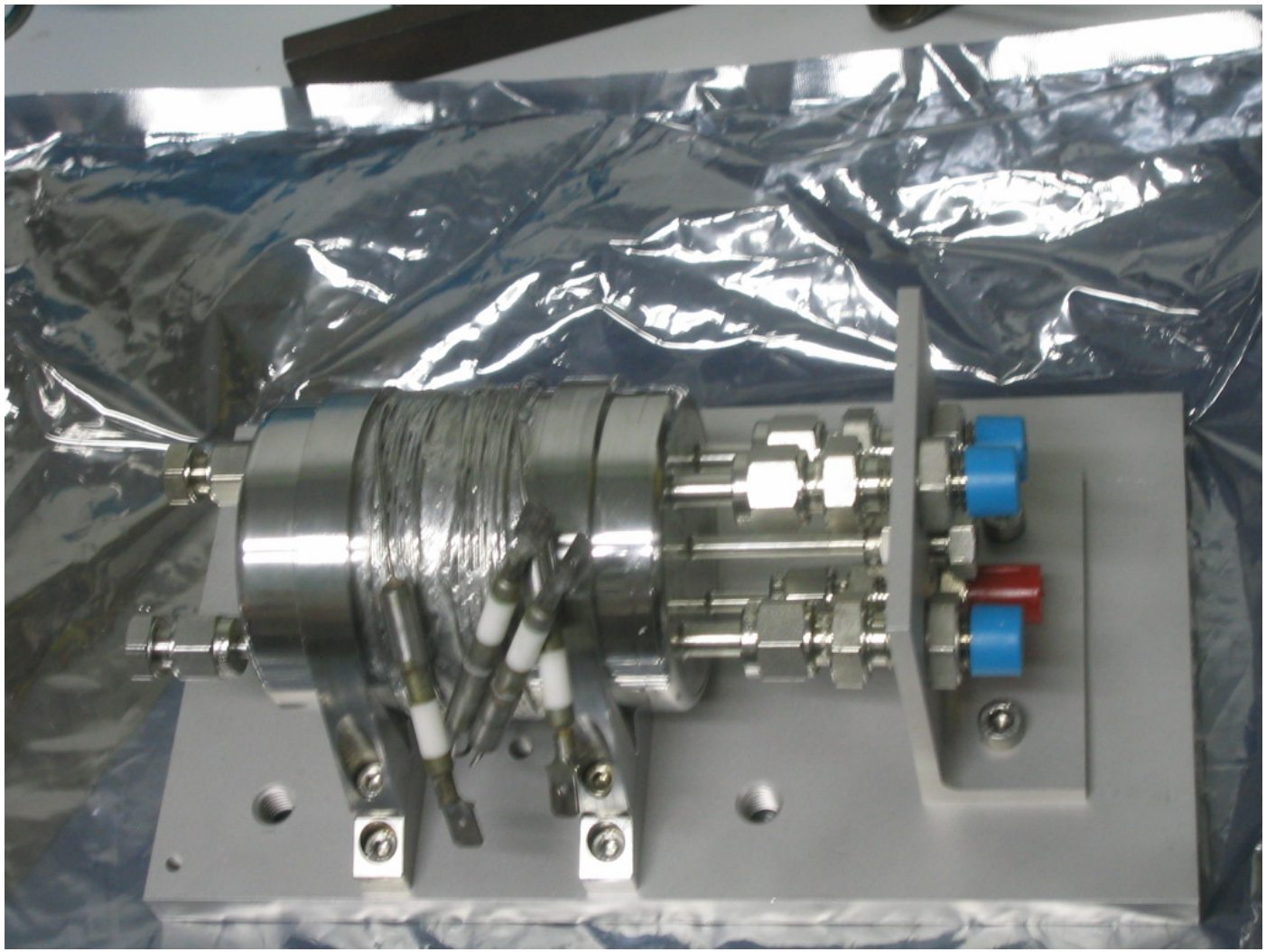

GSE for EM test

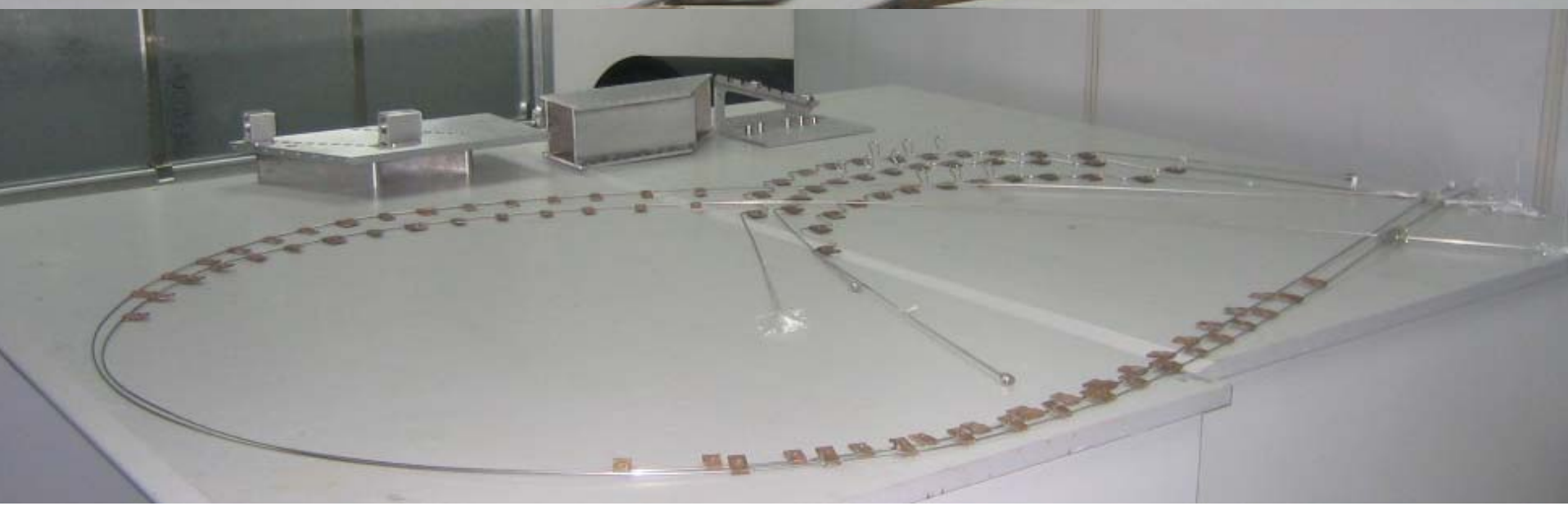

On Going Evaporator Assembly

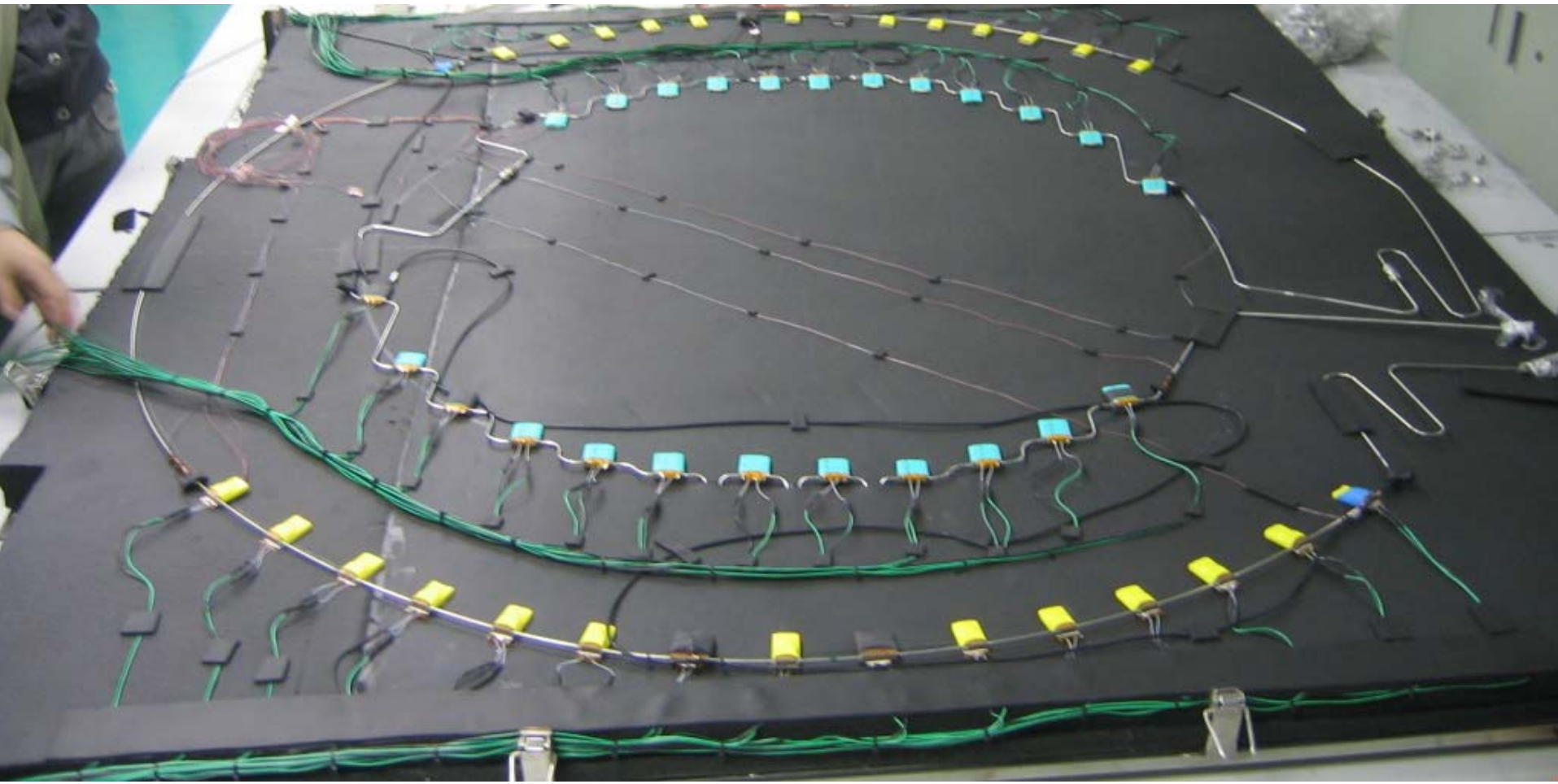

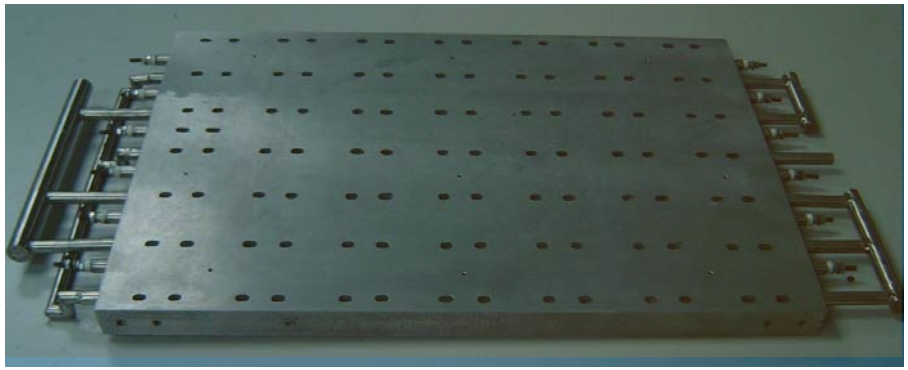

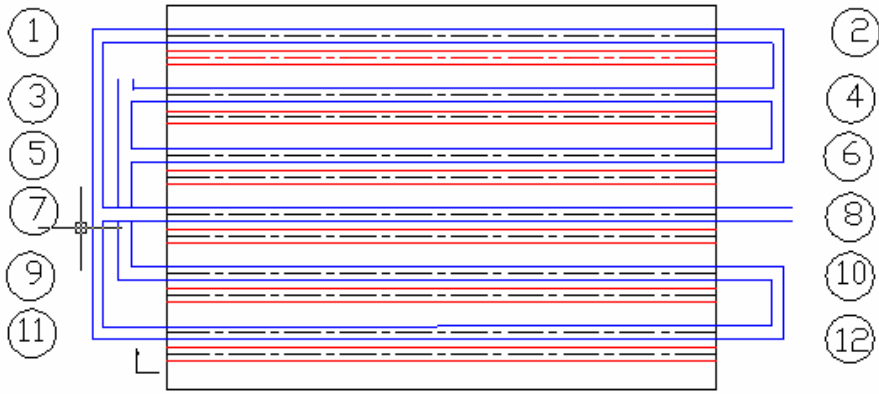

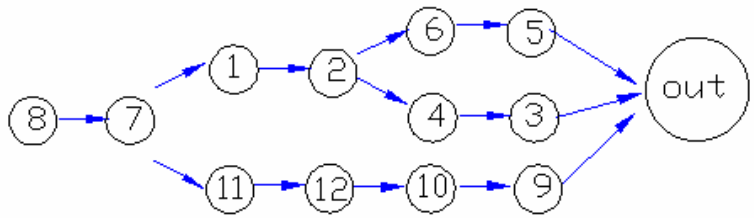

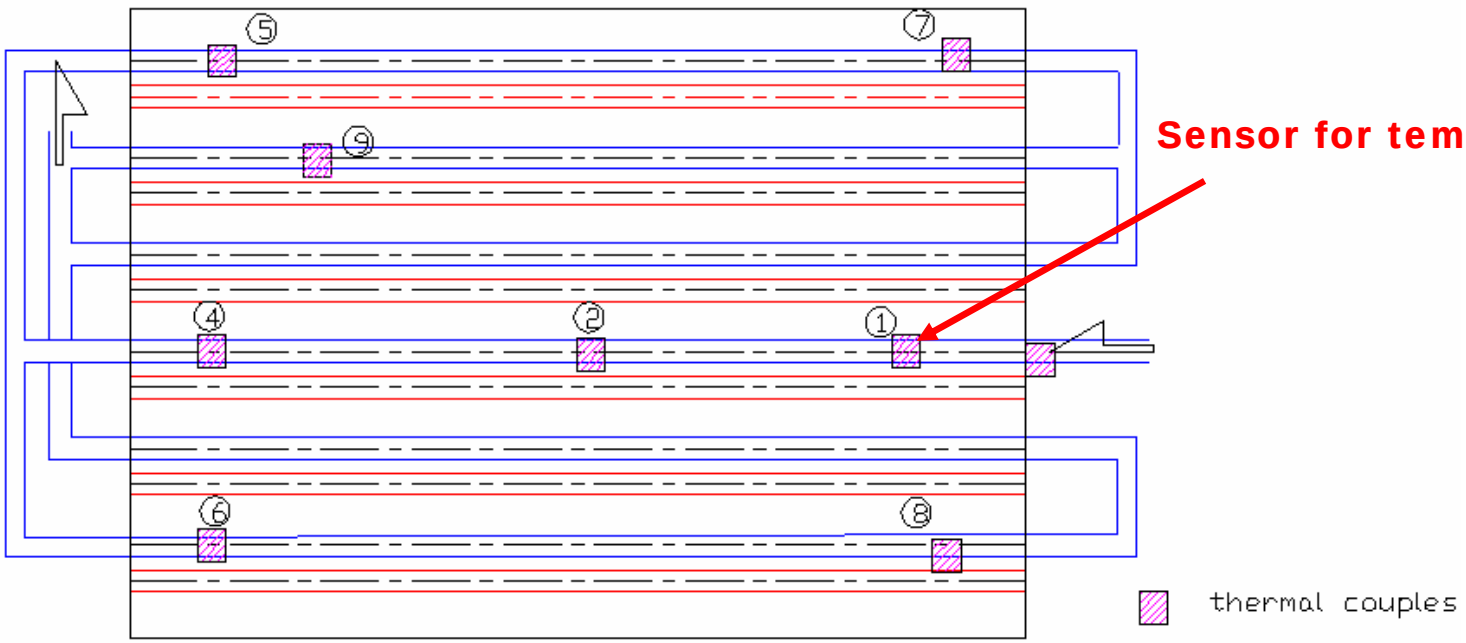

Sensor for temperature control

Location 1 for Temperature Control

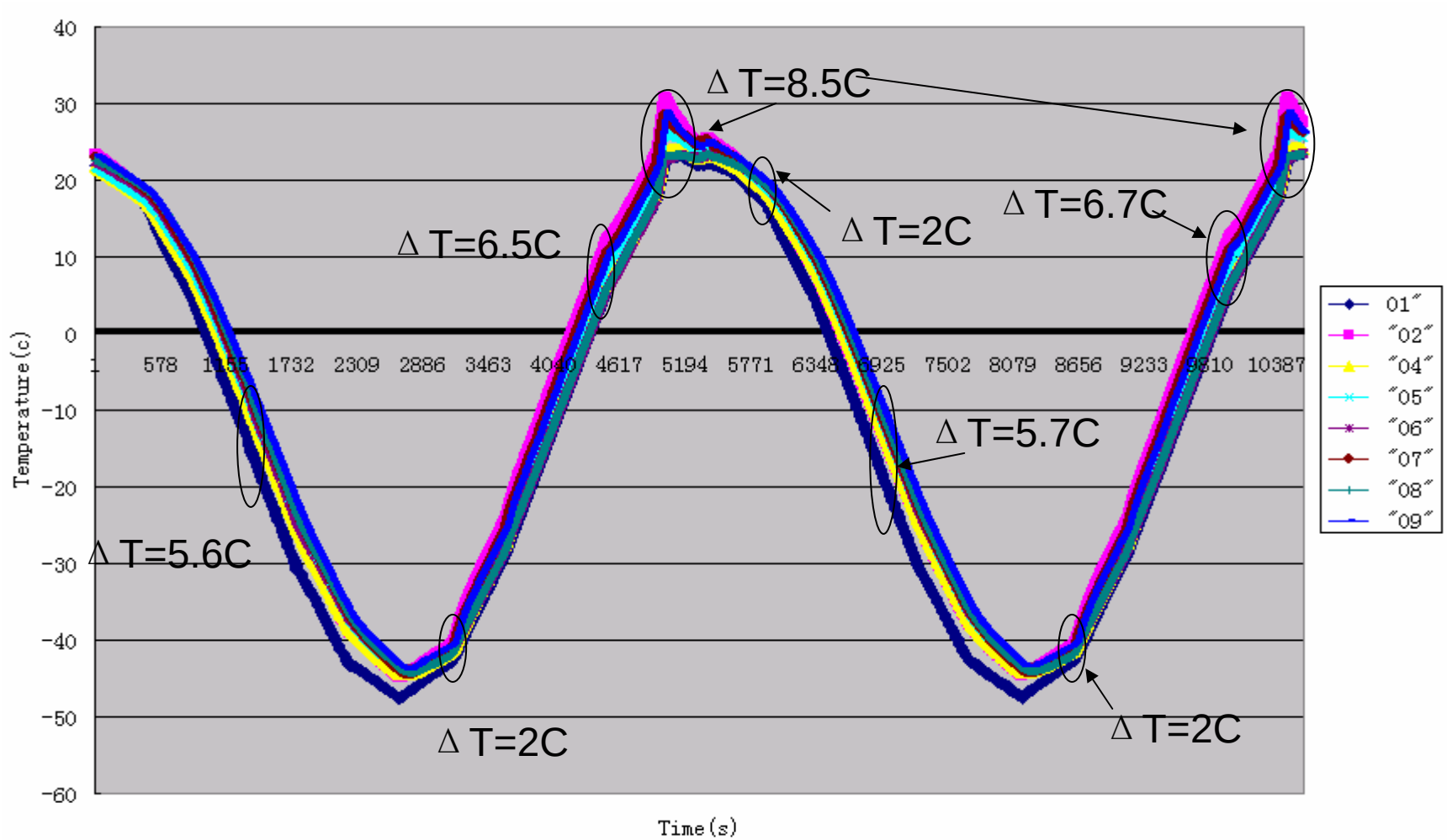

Tracker Thermal Control System

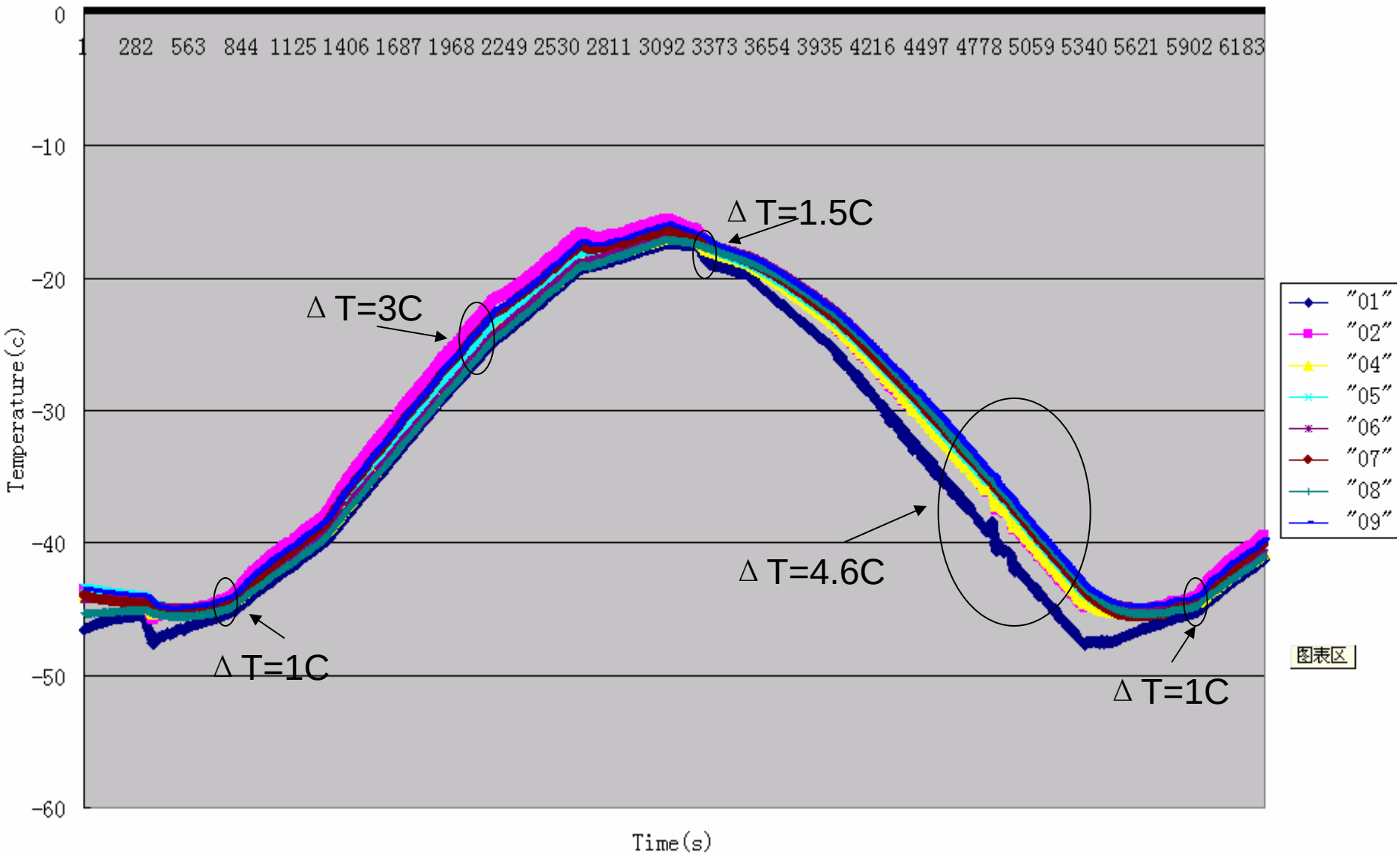

An optical approach is under development for CO2 contact angle measurement

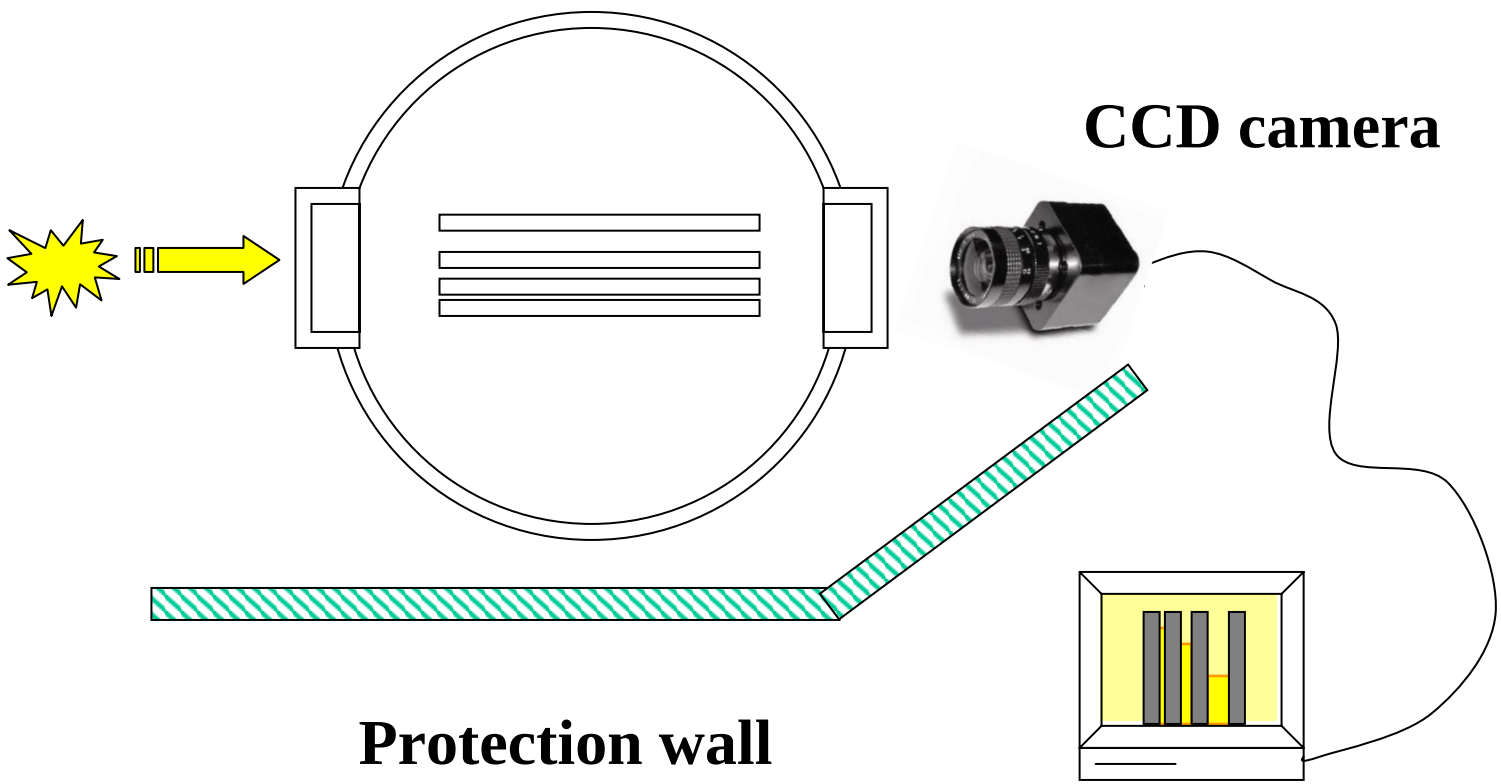

Measurement of contact angle of CO2 on stainless steel surface.doc

CO2 Climbing Height for 316L

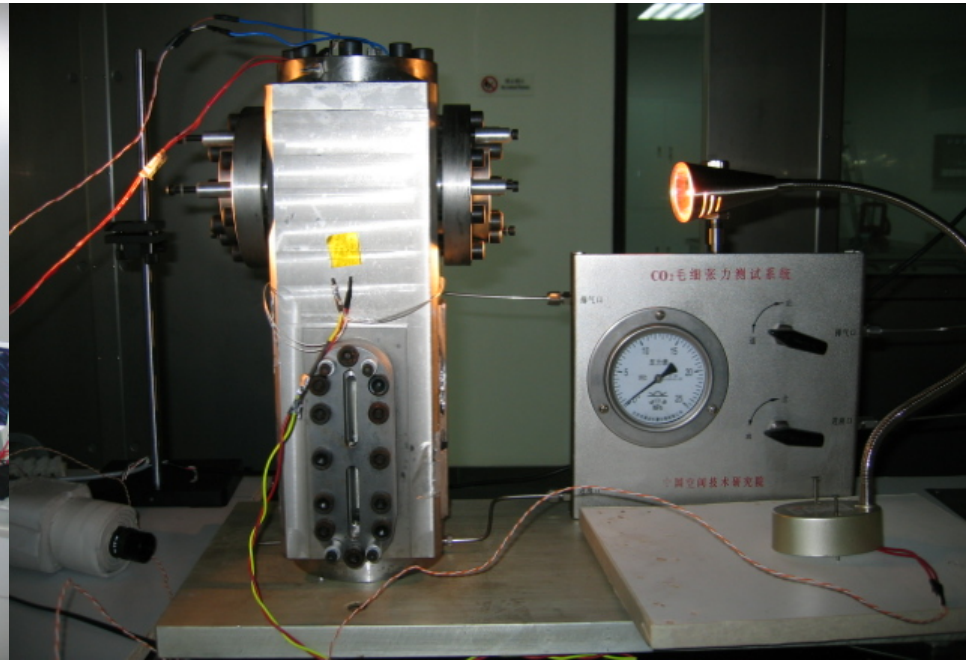

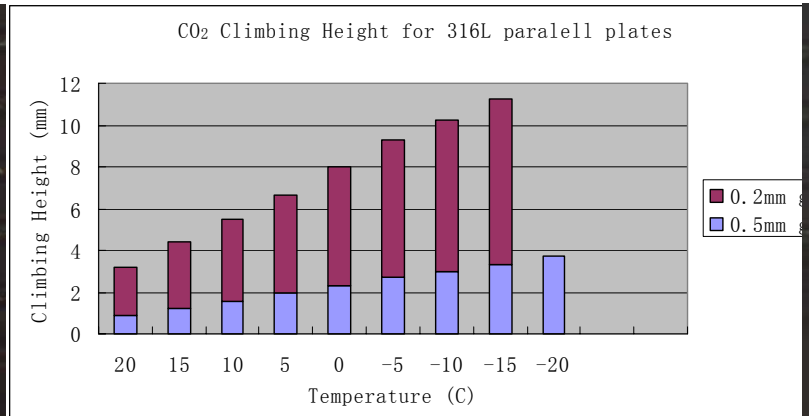

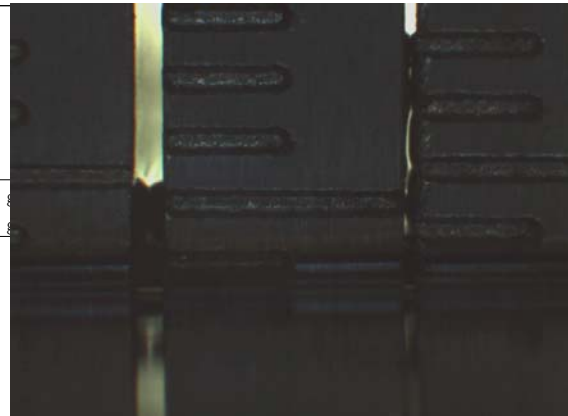

TTCS Dynamic Model for EGSE

- ZC Huang went to TU Delft for a month before last Christmas, and fully discussed about the TTCS Sinda/Fluint model and the real time dynamic model
- He will stay there for another two months (until middle of March) to finish the Math Model for EGSE

Pump